INITIAL STUDY/MITIGATED NEGATIVE DECLARATION

PANOCHE ROAD BRIDGE REPLACEMENT PROJECT

SAN BENITO COUNTY, CALIFORNIA

BRIDGE NUMBER: 43C-0027

LSA

August 2022

This page intentionally left blank

INITIAL STUDY/MITIGATED NEGATIVE DECLARATION

PANOCHE ROAD BRIDGE REPLACEMENT PROJECT

SAN BENITO COUNTY, CALIFORNIA

BRIDGE NUMBER: 43C-0027

Submitted to:

San Benito County Department of Public Works
2301 Technology Parkway
Hollister, California 95023

Prepared by:

LSA
1504 Eureka Road, Suite 310
Roseville, California 95661
(916) 772-7450

Project No. QCE2001

August 2022

This page intentionally left blank

TABLE OF CONTENTS

TABLE OF CONTENTS i
FIGURES AND TABLES ii
LIST OF ABBREVIATIONS AND ACRONYMS iii
1.0 PROJECT INFORMATION 1-1
2.0 PROJECT DESCRIPTION 2-1
2.1 Introduction 2-1
2.2 Project Purpose and Need 2-2
2.3 Project Alternatives 2-2
3.0 ENVIRONMENTAL FACTORS POTENTIALLY AFFECTED AND DETERMINATION 3-1
3.1 Finding 3-1
3.2 Evidence 3-1
3.3 Determination 3-3
4.0 CEQA ENVIRONMENTAL CHECKLIST 4-1
4.1 Aesthetics 4-3
4.2 Agriculture and Forestry Resources 4-7
4.3 Air Quality 4-11
4.4 Biological Resources 4-15
4.5 Cultural Resources 4-38
4.6 Energy 4-42
4.7 Geology and Soils 4-44
4.8 Greenhouse Gas Emissions 4-52
4.9 Hazards and Hazardous Materials 4-55
4.10 Hydrology and Water Quality 4-64
4.11 Land Use and Planning 4-73
4.12 Mineral Resources 4-74
4.13 Noise 4-75
4.14 Population and Housing 4-79
4.15 Public Services 4-80
4.16 Recreation 4-81
4.17 Transportation 4-82
4.18 Tribal Cultural Resources 4-86
4.19 Utilities and Service Systems 4-89
4.20 Wildfire 4-93
4.21 Mandatory Findings of Significance 4-96
4.22 Fish and Wildlife Environmental Document Fees 4-98
5.0 REFERENCES 5-1
6.0 MITIGATION MONITORING AND REPORTING PROGRAM 6-1

FIGURES AND TABLES

FIGURES

Figure 2-1: Regional Location 2-5
Figure 2-2: Project Vicinity 2-7
Figure 2-3: Project Design 2-9

TABLES

Table 4.A: Project Construction Emissions in Tons per Year 4-13
Table 4.B: Native Species Mix 4-23
Table 4.C: Typical Construction Equipment Noise Levels 4-76
Table 6.A: Panoche Road Bridge Replacement Project Mitigation Monitoring and Reporting Program 6-2

APPENDICES

A: VISUAL IMPACT ASSESSMENT
B: CALEEMOD AIR QUALITY CALCULATIONS
C: NATURAL ENVIRONMENTAL STUDY (NES) AND BIOLOGICAL ASSESSMENT (BA)
D: GEOTECHNICAL INVESTIGATION REPORT
E: HYDRAULIC STUDY REPORT AND SUPPLEMENTAL LOCATION HYDRAULIC REPORT
F: TECHNICAL NOISE MEMORANDUM

LIST OF ABBREVIATIONS AND ACRONYMS

%g	percentage of acceleration due to gravity
AASHTO	American Association of State Highway and Transportation Officials
AB	Assembly Bill
ac	acre/acres
ACM	asbestos-containing materials
ACOE	United States Army Corps of Engineers
ADL	aerially deposited lead
ADT	average daily traffic
APE	Area of Potential Effects
APN	Assessor's Parcel Number
AQMP	Air Quality Management Plan
ASR	Archaeological Survey Report
BA	Biological Assessment
BMP	Best Management Practice
bridge	Panoche Road Bridge
BSA	Biological Study Area
CAC	Certified Asbestos Consultant
CAL FIRE	California Department of Forestry and Fire Protection
California Register	California Register of Historical Resources
Cal/EPA	California Environmental Protection Agency
Cal/OSHA	California Occupational Safety and Health Administration
CalRecycle	California Department of Resources Recycling and Recovery
Caltrans	California Department of Transportation
CCR	California Code of Regulations
CDFW	California Department of Fish and Wildlife
CEC	California Energy Commission
CEQA	California Environmental Quality Act
CH_4	methane
CHP	California Highway Patrol

CIP	cast-in-place
CMP	corrugated metal pipe
CNDDB	California Natural Diversity Database
CNPS	California Native Plant Society
CO	carbon monoxide
CO_2	carbon dioxide
CO_2e	carbon dioxide equivalent
CGP	General Permit for Storm Water Discharges Associated with Construction and Land Disturbance Activities (Order No. 2009-0009-DWQ, as amended by 2010-0014-DWG and 2012-0006-DWQ, NPDES No. CAS000002)
County	County of San Benito
CRLF	California red-legged frog
CSST	Certified Site Surveillance Technician
cy	cubic yard/yards
DOC	California Department of Conservation
DOSH	Division of Occupational Safety and Health
DTSC	California Department of Toxic Substances Control
dBA	A-weighted decibels
EIR	Environmental Impact Report
EO	Executive Order
ESA	Environmentally Sensitive Area
FEMA	Federal Emergency Management Agency
FHSZ	Fire Hazard Severity Zone
FHWA	Federal Highway Administration
FMMP	Farmland Mapping and Monitoring Program
FRAP	Fire and Resources Assessment Program
ft	foot/feet
GHG	greenhouse gas
GSA	groundwater sustainability agency
GWP	Global Warming Potential
HBP	Highway Bridge Program
HCP	Habitat Conservation Plan

HFC	hydrofluorocarbon
HPSR	Historical Property Survey Report
HUD	United States Department of Housing and Urban Development
I	Interstate
IPaC	Information for Planning and Consultation
IS/MND	Initial Study/Mitigated Negative Declaration
LBP	lead-based paint
L_{max}	maximum instantaneous sound level
LOS	level of service
LRA	Local Responsibility Area
MASH	Manual for Assessing Safety Hardware
MBTA	Migratory Bird Treaty Act
MBARD	Monterey Bay Air Resources District
mg/cm^2	milligrams per square centimeter
mi	mile/miles
MLD	Most Likely Descendent
MMRP	Mitigation Monitoring and Reporting Program
MT	metric ton/tons
N_2O	nitrous oxide
NAHC	Native American Heritage Commission
National Register	National Register of Historic Places
NCCP	Natural Communities Conservation Plan
NEPA	National Environmental Policy Act
NES	Natural Environmental Study
NMFS	National Marine Fisheries Service
NO_2	nitrogen dioxide
NOI	Notice of Intent
NOT	Notice of Termination
NO_X	nitrogen oxides
NPDES	National Pollutant Discharge Elimination System
NRCS	Natural Resources Conservation Service

OHWM	ordinary high water mark
OPR	State Office of Planning and Research
OSHA	federal Occupational Safety and Health Administration
PBF	physical and biological feature
PFCs	perfluorocarbons
PGA	peak ground acceleration
$PM_{2.5}$	particulate matter less than 2.5 microns in diameter
PM_{10}	particulate matter less than 10 microns in diameter
ppm	parts per million
PRC	Public Resources Code
PRD	Permit Registration Documents
proposed project	Panoche Road over Tres Pinos Creek Bridge Replacement Project
RMP	Risk Management Plan
RoadMod	Road Construction Emissions Model
ROG	reactive organic gases
RSP	rock slope protection
RWQCB	Regional Water Quality Control Board
SB	Senate Bill
SCCC steelhead	South Central California Coast steelhead
SF_6	sulfur hexafluoride
SGMA	Sustainable Groundwater Management Act
SMARTS	Stormwater Multiple Application and Report Tracking System
SO_2	sulfur dioxide
SR	State Route
SRA	State Responsibility Areas
SVP	Society of Vertebrate Paleontology
SWPPP	Stormwater Pollution Prevention Plan
SWRCB	State Water Resources Control Board
TAC	toxic air contaminant
TMP	Transportation Management Plan
US	United States Route

USDA	United States Department of Agriculture
USDOT	United States Department of Transportation
USEPA	United States Environmental Protection Agency
USFWS	United States Fish and Wildlife Service
VMT	vehicle miles traveled
WDID	Waste Discharge Identification Number
WPCP	Water Pollution Control Program
WSEL	water surface elevation
XPI	Extended Phase I

This page intentionally left blank

1.0 PROJECT INFORMATION

Project Title:	Panoche Road over Tres Pinos Creek Bridge Replacement Project
Caltrans Bridge No.:	43C0027
County Project No.:	698
Project Location:	The project is located in an unincorporated portion of San Benito County along Panoche Road, approximately 25 miles (mi) west of Interstate (I) 5 and approximately 9.5 mi east of State Route (SR) 25.
Name of Property Owner:	County of San Benito (County)
Name of Applicant:	San Benito County Resource Management Agency, Public Works Division
Assessor's Parcel Number(s):	0271500030
Acreage of Property:	The completed project would cover approximately 3 acres (ac).
General Plan Designations:	Rangeland
Zoning:	Agricultural Rangeland
Lead Agency:	San Benito County Resource Management Agency, Public Works Division
Prepared By:	LSA 1504 Eureka Road, Suite 310 Roseville, California 95661
Date Prepared:	August 2022
Contact Person:	Steve Loupe, Interim RMA Director
Phone Number:	(831) 902-2271

This page intentionally left blank

2.0 PROJECT DESCRIPTION

2.1 INTRODUCTION

The San Benito County Department of Public Works proposes to replace the existing two-lane Panoche Road Bridge (bridge), Bridge No. 43C-0027, over the Tres Pinos Creek in San Benito County, California (proposed project). The new bridge would be constructed south of the existing bridge. The roadway approach from the east would be realigned to allow construction of the new bridge in one stage while maintaining traffic flow on the existing bridge during construction. Additionally, shifting the alignment of the eastern roadway approach would improve roadway geometry by eliminating the slight "S" curve over the existing bridge. Upon completion of the new bridge, the existing bridge would be demolished. The proposed project would also widen the roadway approaches on the east and west ends of the bridge to conform to the new bridge width and profile. After construction, both the bridge and roadway approaches would contain two 12-foot (ft) lanes (one in each direction) and two 4 ft shoulders, and would meet current American Association of State Highway and Transportation Officials (AASHTO) minimum design speed standards.

The bridge identification information is listed below:

Dist.-County-Route-PM: 05-SBT-0-CR
Fed. Proj. No.: BRLS-5943(056)
Caltrans Bridge No. 43C0027, County Project No. 698
Latitude: 36° 65' 46"
Longitude: 121° 06' 69"

2.1.1 Existing Facility

The project area is in unincorporated San Benito County, approximately 13 mi east of Paicines and 11 mi west of the intersection of Little Panoche Road and Panoche Road (see **Figure 2-1: Regional Location**). The bridge runs generally in an east-west direction, with Tres Pinos Creek flowing under the bridge in a north-south direction (see **Figure 2-2: Project Vicinity**). The surrounding land uses are primarily agricultural.

The project site is located on Panoche Road, across Tres Pinos Creek. Panoche Road runs roughly east to west, connecting SR-25 and I-5 within San Benito County, California. The project is located approximately 25 miles (mi) west of Interstate (I) 5 and approximately 9.5 mi east of State Route (SR) 25. East of the project site, Panoche Road is degraded and hinders drivers from using the road as a preferred alternate route to I-5.

The Panoche Road Bridge was originally constructed in 1960. The existing bridge is 87 ft long and 16 ft wide with two 8 ft travel lanes (one in each direction) and no shoulders. The existing bridge structure has two piers located within the channel. According to the California Department of Transportation (Caltrans) California Road System Map, Panoche Road is classified as a Major Collector (Rural Roadway). The average daily traffic (ADT) for Panoche Road in 2010 was 800 cars per day, and by 2029, the ADT is projected to be 1,024 cars per day.

There is an unnamed tributary that runs east to west and discharges into Tres Pinos Creek along its east bank on the south side of the existing bridge. Under existing conditions, the channel of the unnamed tributary runs between the southern edge of Panoche Road and the toe of a steep hillside adjacent to the road, past the existing east bridge abutment and into Tres Pinos Creek.

2.2 PROJECT PURPOSE AND NEED

2.2.1 Purpose

The purpose of this project is to:

- Provide for wider travel lanes and shoulders that comply with current AASHTO bridge and road design standards;
- Provide a replacement structure that meets current seismic design standards;
- Increase the bridge clearance over Tres Pinos Creek, both vertically and horizontally, to improve flood flows;
- Provide long-term safe vehicular access across Tres Pinos Creek; and
- Comply with County, Caltrans, and AASHTO design standards for design and construction of the approach roadways and replacement bridge.

2.2.2 Need

The existing bridge is 16 ft wide, has no shoulders, and does not meet AASHTO minimum lane and shoulder width standards for Rural Roadways with a future ADT between 400 and 2,000 cars per day. In addition, the existing roadway approaches have no shoulders, which does not meet the AASHTO 3 ft minimum shoulder width standard for a Local Road.

2.2.3 Funding

Funding for the proposed project shall come from the federal Highway Bridge Program (HBP) and local matching funds. It is anticipated that the local match shall come from the San Benito County Department of Public Works.

2.3 PROJECT ALTERNATIVES

The environmental documentation for the proposed project evaluates one Build Alternative. A No Project/No Build Alternative is also evaluated as required by the California Environmental Quality Act (CEQA) and the National Environmental Policy Act (NEPA).

2.3.1 No Build Alternative: No Action is Taken

In the No Build Alternative, no improvements to the Panoche Road Bridge would be implemented. The bridge would remain functionally obsolete in that neither the bridge nor the roadway approaches would meet AASHTO lane width and/or shoulder width standards, the bridge would continue to be seismically vulnerable, and it would remain in noncompliance with code-mandated flood-flow requirements.

2.3.2 Build Alternative

As a part of the Build Alternative, the existing single-lane 87 ft long and 16 ft wide bridge would be demolished and replaced with a 132 ft long and 35 ft wide cast-in-place (CIP) pre-stressed concrete slab bridge. The replacement bridge would have two equal (66 ft) long spans, two 12 ft travel lanes, and two 4 ft wide paved shoulders along each side of the travel lanes (see **Figure 2-3: Project Design**). The replacement bridge would be constructed south of the existing bridge, and the existing bridge would be demolished after the new bridge construction has been completed.

The Build Alternative would reduce the current number of piers in the channel from two to one. Pier 2 would be built within the creek channel. Excavation would require an area 47 ft long by 13 ft wide by 6 ft deep. Abutment 1 (west) would require an excavation area that is 60 ft long by 11 ft wide by up to 10 ft deep. Abutment 3 (east) would require an excavation area 55 ft long by 11 ft wide by up to 12 ft deep. A wingwall would be constructed at the southeast corner of the bridge. Rock slope protection (RSP) would be placed on both sides of the creek banks to protect the new abutments from hydraulic scour. The RSP blanket would continue upstream on the east bank to mitigate for increased channel velocities that would result from the larger hydraulic opening and greater channel conveyance capacity of the new two-span bridge. The RSP blanket would be placed on the existing bank surface, without excavating into the bank, in order to avoid impacting the natural spring located northeast of the existing bridge.

The proposed bridge deck would be approximately 5 to 6 ft higher than the existing bridge deck, allowing for drift in the creek channel. Furthermore, the proposed bridge would provide for over 3.5 ft of freeboard, which is the minimum amount of clearance between the bottom of the girders and the design highwater. The Build Alternative would utilize a permanent shorter-length alternative crash cushion system at the northwest corner of the bridge to maintain access to a gated driveway located adjacent to the project boundary.

2.3.2.1 Roadway Approaches and Driveways

As part of the Build Alternative, the east and west roadway approaches would be modified to conform to the width and location of the new bridge and to reduce the S-curve existing along Panoche Road. The modifications would include realigning the eastern roadway approach approximately 35 ft south. At build-out, the modified eastern roadway approach would become the eastern roadway approach for the new Panoche Road Bridge. Work on the roadway approaches would total approximately 550 ft.

The driveway at the nearest residence east of the bridge along Panoche Road would be shifted west by up to 40 ft in order to improve truck turning access.

2.3.2.2 Utility Rerouting

Existing overhead electric and telephone lines and a gas line are located within the project area. The existing overhead telephone line crosses Tres Pinos Creek east of the existing bridge and then transitions to underground just west of the existing bridge. The existing electric and gas lines run perpendicular to the southeast border of the project site and are outside the eastern limits of the project site. At this time, no temporary or permanent utility relocations would be required.

However, if any of the existing utilities are in conflict with the new bridge, they would be relocated and the overhead line shifted to new/relocated poles.

2.3.2.3 Construction Details

Construction is expected to occur between June 2025 and October 2026. Construction would occur year-round and is anticipated to be 13 months in duration. Construction within the channel of the river is anticipated to take a total of approximately 2.5 months. On average, approximately 5–10 workers would be on the construction site per day.

2.3.2.4 Traffic Rerouting

The Build Alternative would maintain traffic on the existing bridge for the duration of project construction. During construction of the proposed bridge one lane would remain open to vehicular traffic on the existing bridge. Upon completion of the proposed project the existing bridge would be demolished completely and the new bridge would facilitate two lanes of traffic. Throughout the duration of construction the Build Alternative would also maintain access to driveways off of Panoche Road.

2.3.2.5 Construction Access, Creek Access and Staging

Most years, the creek channel has some water flowing year-round fed by nearby underground springs. During the low- or no-flow months, access into the channel is expected to be readily available from both banks along the proposed new alignment. Access on the east side of the creek is expected to be more difficult due to the steepness of the adjacent hillside.

Construction of bridge foundation elements and placement of RSP may require some temporary diversion of channel flows. Temporary access easements from adjacent properties would be needed for a contractor staging area, materials storage, and construction operations. Construction materials and equipment would be staged in two locations within the project limits. One location is located south of Panoche Road and east of the existing and proposed bridge, and the other location is located north of Panoche Road on the west side of Tres Pinos Creek. Staging areas are shown on **Figure 2-3: Project Design.**

Panoche Road is shifting to the south (a maximum of 35 ft) and would potentially obstruct the flow of the unnamed tributary that drains into the east bank of Tres Pinos Creek. In order to avoid obstructing flow, the Build Alternative would grade a new channel of the unnamed tributary along the south edge of the realigned road. The new channel would be bound between the wing wall of the bridge and a retaining wall at the southeast corner of the bridge.

2.3.2.6 Retaining Wall

A 110 ft wide by 120 ft long retaining wall would be installed against the hillside east of Tres Pinos Creek and south of Panoche Road to minimize excavation into the hillside and to protect from erosion and scour from Tres Pinos Creek. The retaining wall would run parallel to the new bridge. The retaining wall would retain a new cut slope in the adjacent hillside to accommodate the realignment of the unnamed tributary. The maximum depth of excavation for the retaining wall is 22 ft.

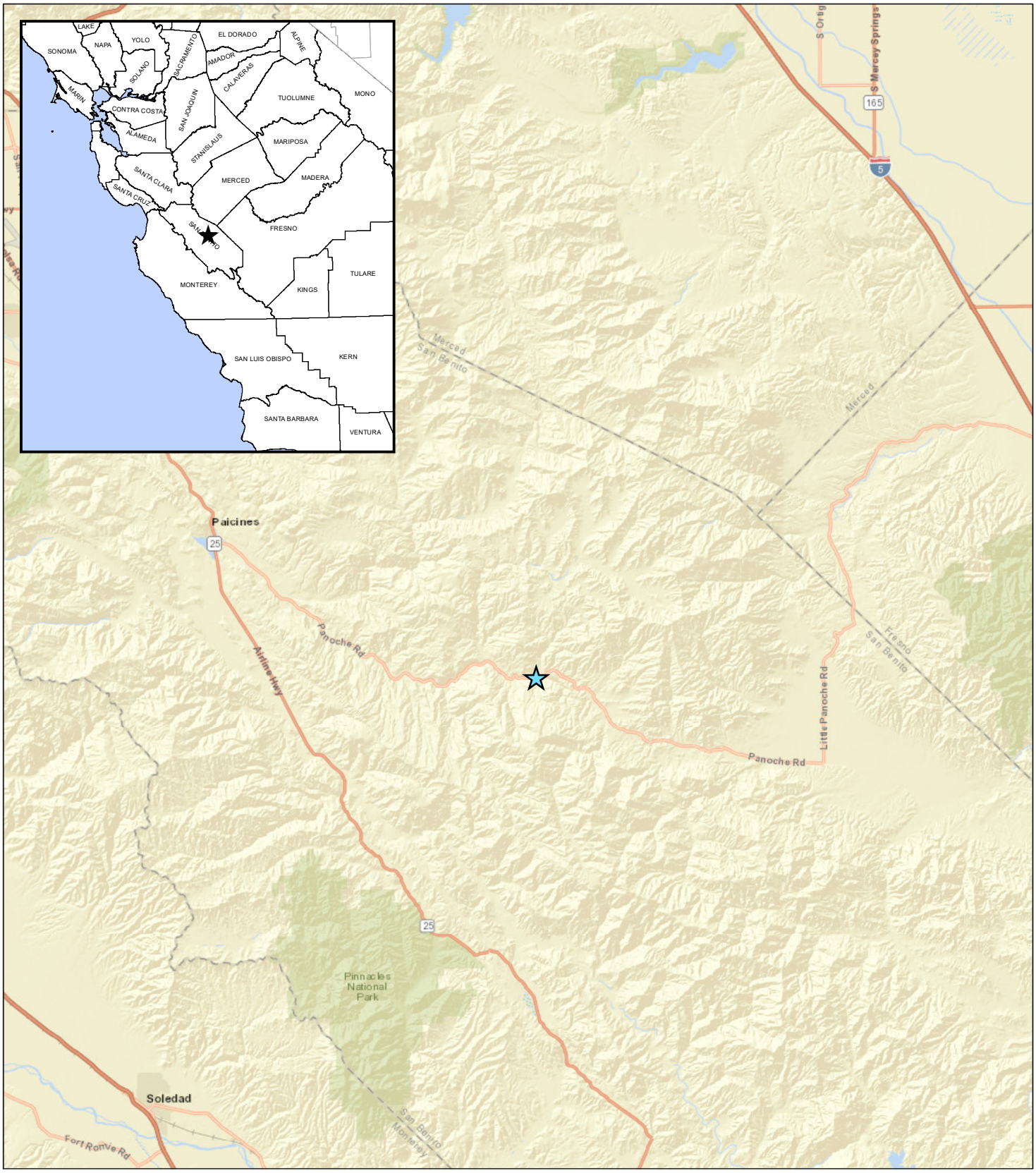

LEGEND

Project Location

FIGURE 2-1

Panoche Road Bridge (No. 43C0027)
Replacement at Tres Pinos Creek
San Benito County, California; Caltrans District 5
Federal Project No. BRLO-5943(056)

Regional Location

0 2.5 5
Miles

SOURCE: ESRI World Street Map (05/2020)

I:\QCE2001\GIS\Reports\ISMND\RegionalLoc.mxd (4/28/2022)

This page intentionally left blank

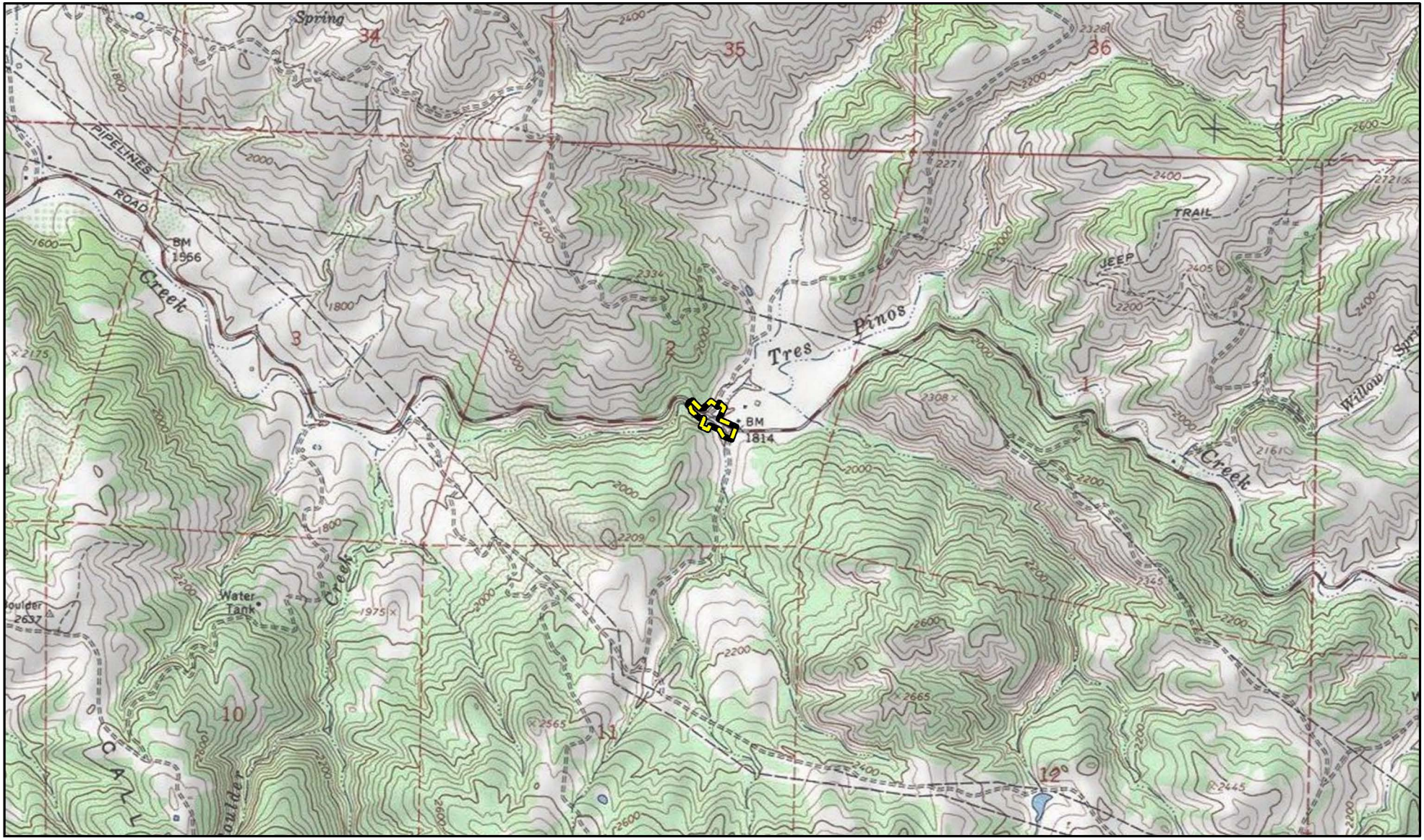

LEGEND

Study Area - (3.66 ac)

FIGURE 2-2

N

0 1000 2000

FEET

Panoche Road Bridge (No. 43C0027)
Replacement at Tres Pinos Creek
San Benito County, California; Caltrans District 5
Federal Project No. BRLO-5943(056)

Project Vicinity

SOURCE: USGS 7.5-minute topographic quadrangle Panoche Pass, CA (1968, 1971 ed.)

I:\QCE2001\GIS\Reports\ISMND\PrjVicTopo.mxd (4/28/2022)

This page intentionally left blank

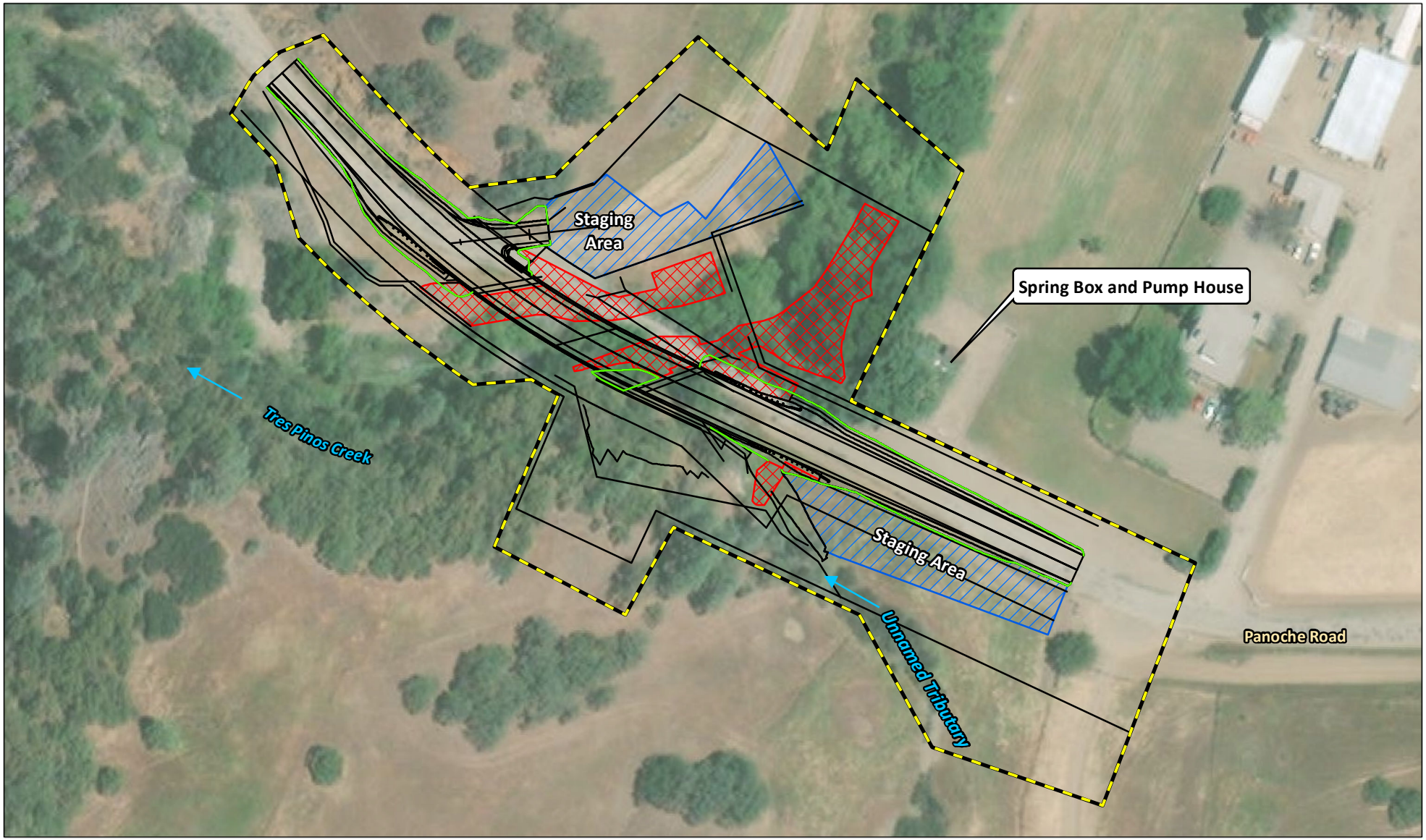

FIGURE 2-3

LEGEND

- Study Area - (3.66 ac)
- Project Design
- Rock Slope Protection
- Staging Areas
- Cut and Fill

0 50 100
FEET

Panoche Road Bridge (No. 43C0027)
Replacement at Tres Pinos Creek
San Benito County, California; Caltrans District 5
Federal Project No. BRLO-5943(056)

Project Design

SOURCE: Basemap - ESRI World Imagery (10/2018); Design - Quincy Engineering (12/2020)

I:\QCE2001\GIS\Reports\ISMND\ProjectDesign.mxd (4/28/2022)

This page intentionally left blank

3.0 ENVIRONMENTAL FACTORS POTENTIALLY AFFECTED AND DETERMINATION

The environmental factors checked below would be potentially affected by this project, involving at least one impact that is a "Potentially Significant Impact" as indicated by the checklist in Chapter 4.0.

☒ Aesthetics	☒ Agriculture and Forestry Resources	☒ Air Quality
☒ Biological Resources	☒ Cultural Resources	☒ Energy
☒ Geology/Soils	☒ Greenhouse Gas Emissions	☒ Hazards & Hazardous Materials
☒ Hydrology/Water Quality	☐ Land Use/Planning	☐ Mineral Resources
☒ Noise	☐ Population/Housing	☐ Public Services
☐ Recreation	☒ Transportation	☒ Tribal Cultural Resources
☒ Utilities/Service Systems	☒ Wildfire	☒ Mandatory Findings of Significance

Some proposed applications that are not exempt from CEQA review may have little or no potential for adverse environmental impacts related to most of the topics in the Environmental Checklist and/or potential impacts may involve only a few limited subject areas. These types of projects are generally minor in scope, located in a nonsensitive environment, and are easily identifiable and without public controversy. For the environmental issue areas where there is no potential for significant environmental impact (and not checked above), the following findings can be made using the project description, environmental setting, or other information as supporting evidence.

☐ Check here if this finding is not applicable.

3.1 FINDING

For the above-referenced topics that are not checked off, there is no potential for significant environmental impact to occur from either construction, operation, or maintenance of the proposed project, and no further discussion in the Environmental Checklist is necessary.

3.2 EVIDENCE

3.2.1 Land Use and Planning

The project site is located on a prescriptive easement across privately owned parcels that are designated as Rangeland per the San Benito County General Plan Land Use Map. Additional right-of-way acquisition may be required to accommodate the new bridge and realignment of Panoche Road. If so, these areas would also be added to the prescriptive easement owned/maintained by the County. Overall, such transportation projects are permitted per the San Benito County General Plan Land Use Plan. The proposed project would not cause a significant environmental impact due to a conflict with local planning documents, policy, or regulations. Overall, the proposed project is consistent with all applicable land use plans, policies, or regulations adopted, and no conflict/impacts would occur.

3.2.2 Mineral Resources

There are no known mineral resources within or in the vicinity of the Project site. According to the San Benito County WebGIS Viewer, the nearest mineral resource area is approximately 17.5 miles northwest of the project site (County of San Benito n.d.). The proposed Project would not result in the loss of availability of a known mineral resource of value to the region or residents of the State, and no impact related to the loss of mineral resources would occur.

3.2.3 Population and Housing

The proposed project would involve the replacement of the existing 87 ft long and 16 ft wide bridge structure with a 132 ft long and 35 ft wide structure that would be approximately 5 to 6 ft higher than the existing bridge deck to allow for adequate freeboard. The proposed project does not include the construction of new housing, nor would it cause an increase in the housing supply indirectly through increased demand for housing or the extension of roads or other infrastructure. Additionally, because the proposed project is a bridge replacement project, it would not cause an increase in the County's population and would not result in direct or indirect growth-inducing effects. Furthermore, the proposed project would not displace existing housing or people because it is located in a public road easement and no habitable structures exist within the project site. Therefore, implementation of the proposed project would not have an impact on population growth and housing.

3.2.4 Public Services

Public services, including police and fire protection, are currently provided to the project area. Fire service for the proposed project and surrounding area is currently and would continue to be provided by the San Benito County Fire Department and the California Department of Forestry and Fire Protection (CAL FIRE). Law enforcement services for the proposed project and surrounding area are currently and would continue to be provided by the San Benito County Sheriff's Department. The proposed project would involve replacement of an existing bridge and completion of other related roadway improvements. The proposed project would not result in the development of additional residential uses or cause an increase in population that would require the provision of new fire or police facilities, schools, parks, or other public facilities, or result in the need for physically altered facilities. Therefore, implementation of the proposed project would not have an impact on public services.

3.2.5 Recreation

As discussed above, the proposed project would involve the replacement of the existing 87 ft long and 16 ft wide structure with a 132 ft long and 35 ft wide structure that would be approximately 5 to 6 ft higher than the existing bridge deck to allow for adequate freeboard. The proposed project would not result in an increase in population that would result in increased use of existing neighborhood or regional parks such that substantial physical deterioration would occur, nor would it include the construction or expansion of recreational facilities that might have an adverse physical effect on the environment. Therefore, implementation of the proposed project would not have an impact on parks and recreation.

3.3 DETERMINATION

On the basis of this initial evaluation:

☐ I find that the proposed project COULD NOT have a significant effect on the environment, and a NEGATIVE DECLARATION shall be prepared.

☒ I find that although the proposed project could have a significant effect on the environment, there shall not be a significant effect in this case because revisions in the project have been made by or agreed to by the project proponent. A MITIGATED NEGATIVE DECLARATION shall be prepared.

☐ I find that the proposed project MAY have a significant effect on the environment, and an ENVIRONMENTAL IMPACT REPORT is required.

☐ I find that the proposed project MAY have a "Potentially Significant Impact" or "Potentially Significant Unless Mitigated" impact on the environment, but at least one effect (1) has been adequately analyzed in an earlier document pursuant to applicable legal standards, and (2) has been addressed by mitigation measures based on the earlier analysis as described on attached sheets. An ENVIRONMENTAL IMPACT REPORT is required, but it must analyze only the effects that remain to be addressed.

☐ I find that although the proposed project could have a significant effect on the environment, because all potentially significant effects (a) have been analyzed adequately in an earlier ENVIRONMENTAL IMPACT REPORT or NEGATIVE DECLARATION pursuant to applicable standards, and (b) have been avoided or mitigated pursuant to that earlier ENVIRONMENTAL IMPACT REPORT or NEGATIVE DECLARATION, including revisions or mitigation measures that are imposed upon the proposed project, nothing further is required.

Project Planner	Date
Planning Manager	Date

This page intentionally left blank

4.0 CEQA ENVIRONMENTAL CHECKLIST

1. A brief explanation is required for all answers except "No Impact" answers that are adequately supported by the information sources a Lead Agency cites in the parentheses following each question. A "No Impact" answer is adequately supported if the referenced information sources show that the impact simply does not apply to projects like the one involved (e.g., the project falls outside a fault rupture zone). A "No Impact" answer should be explained where it is based on project-specific factors as well as general standards (e.g., the project shall not expose sensitive receptors to pollutants, based on a project-specific screening analysis).

2. All answers must take account of the whole action involved, including off-site as well as on-site, cumulative as well as project-level, indirect as well as direct, and construction as well as operational impacts.

3. Once the Lead Agency has determined that a particular physical impact may occur, then the checklist answers must indicate whether the impact is potentially significant, less than significant with mitigation, or less than significant. "Potentially Significant Impact" is appropriate if there is substantial evidence that an effect may be significant. If there are one or more "Potentially Significant Impact" entries when the determination is made, an Environmental Impact Report (EIR) is required.

4. "Negative Declaration: Less than Significant With Mitigation Incorporated" applies where the incorporation of mitigation measures has reduced an effect from "Potentially Significant Impact" to a "Less than Significant Impact." The Lead Agency must describe the mitigation measures and briefly explain how they reduce the effect to a less than significant level (mitigation measures from earlier analyses may be cross-referenced, as discussed below).

5. Earlier analyses may be used where, pursuant to the tiering, Program EIR, or other CEQA process, an effect has been adequately analyzed in an earlier EIR or Negative Declaration (Section 15063 [c][3][D]). In this case, a brief discussion should identity the following:

    a. **Earlier Analysis Used:** Identify and state where they are available for review.

    b. **Impacts Adequately Addressed:** Identify which effects from the above checklist were within the scope of and adequately analyzed in an earlier document pursuant to applicable legal standards, and state whether such effects were addressed by mitigation measures based on the earlier analysis.

    c. **Mitigation Measures:** For effects that are "Less than Significant with Mitigation Measures Incorporated," describe the mitigation measures that were incorporated or refined from the earlier document and the extent to which they address site-specific conditions for the project.

6. Lead Agencies are encouraged to incorporate into the checklist references to information sources for potential impacts (e.g., general plans, zoning ordinances). Reference to a previously prepared or outside document should, where appropriate, include a reference to the page or pages where the statement is substantiated.

7. **Supporting Information Sources.** A source list should be attached, and other sources used or individuals contacted should be cited in the discussion.

8. This is only a suggested form, and Lead Agencies are free to use different formats; however, Lead Agencies should normally address the questions from this checklist that are relevant to a project's environmental effects in whatever format is selected.

9. The explanation of each issue should identify:

    a. The significance criteria or threshold, if any, used to evaluate each question; and

    b. The mitigation measure identified, if any, to reduce the impact to less than significant.

4.1 AESTHETICS

	Potentially Significant Impact	Less Than Significant with Mitigation Incorporated	Less Than Significant Impact	No Impact
Except as provided in Public Resources Code Section 21099, would the project:				
a. Have a substantial adverse effect on a scenic vista?	☐	☐	☐	☒
b. Substantially damage scenic resources, including, but not limited to, trees, rock outcroppings, and historic buildings within a state scenic highway	☐	☐	☐	☒
c. In non-urbanized areas, substantially degrade the existing visual character or quality of public views of the site and its surroundings? (Public views are those that are experienced from a publicly accessible vantage point.) If the project is in an urbanized area, would the project conflict with applicable zoning and other regulations governing scenic quality?	☐	☐	☒	☐
d. Create a new source of substantial light or glare which would adversely affect day or nighttime views in the area?	☐	☐	☒	☐

a. Would the project have a substantial adverse effect on a scenic vista?

A scenic vista is defined as a viewpoint that provides expansive views of a highly valued landscape for the benefit of the general public. Aesthetic components of a scenic vista generally include: (1) scenic quality, (2) sensitivity level, and (3) view access. The project area is rural and is primarily characterized by open space, the Tres Pinos Creek channel and its associated riparian vegetation, and a single residential unit and accessory buildings. Development in the project vicinity includes local roads, residential uses, and agriculture-related developments such as barns, water tanks, and corrals. The proposed bridge replacement and roadway improvement project would be consistent with the land uses within the project corridor and nearby vicinity.

The project site is only visible from Panoche Road, and there are no other surrounding public viewpoints. Although the nearby open space, which consists of hilly oak woodland habitat, is visible from the project site, the proposed bridge replacement and roadway improvements would not alter the existing views. Furthermore, the proposed project and adjacent land have no federal or locally designated scenic resources and are not located within a Scenic Corridor (County of San Benito 2015b), and Panoche Road is not designated as a Scenic Highway or a Scenic Resource. Implementation of the proposed project would not result in a substantial adverse effect on a scenic vista. No impact would occur, and no mitigation is required.

Significance Determination: No Impact

Mitigation/Compliance Measures: No mitigation is required.

Significance Determination after Mitigation/Compliance: No Impact

b. Would the project substantially damage scenic resources, including, but not limited to, trees, rock outcroppings, and historic buildings within a state scenic highway?

The Caltrans Landscape Architecture Program administers the Scenic Highway Program contained in Streets and Highways Code Sections 260–263. There are three highways within San Benito County that are eligible for State Scenic Highway designation: SR-146, SR-25, and SR-156. Additionally, United States Route (US) 101, SR-129, and SR-146 are listed as County-designated scenic highways (County of San Benito 2015b). The project site is not in the vicinity of or visible from any of the above-listed highways. The nearest highway eligible for State Scenic Highway designation is SR-25, which is approximately 9 mi west of the project site. In addition, according to the San Benito County General Plan, there are no designated scenic corridors in the project vicinity. There are no historic buildings or rock outcroppings on the project site or in the surrounding vicinity. Furthermore, implementation of the proposed project would not result in the removal or damage of any scenic resources. Therefore, implementation of the proposed project would not damage scenic resources within a State or locally designated scenic roadway. No impact would occur, and no mitigation is required.

Significance Determination: No Impact

Mitigation/Compliance Measures: No mitigation is required.

Significance Determination after Mitigation/Compliance: No Impact

c. In non-urbanized area, substantially degrade the existing visual character or quality of public views of the site and its surroundings? (Public views are those that are experienced from a publicly accessible vantage point). If the project is in an urbanized area, would the project conflict with applicable zoning and other regulations governing scenic quality?

San Benito County has identified agricultural areas, such as row crops, pastures, orchards, vineyards, ranches, barns and farms with cattle and various livestock, the Gabilan Mountain Range, and the Diablo Mountain Range, as the most important scenic resources (vistas) in the county (EMC Planning Group Inc. 2015). There are no County-designated scenic resources (vistas) within the boundaries of the proposed project. The project site is in a non-urbanized area in a rural portion of San Benito County along Panoche Road crossing over Tres Pinos Creek. The visual character of the project site is primarily defined by open space consisting of hilly oak woodland habitat, the Tres Pinos Creek channel and its associated riparian vegetation, and the rural residential unit and accessory buildings on Assessor's Parcel Number (APN) 0271500030.

During project construction activities, the visual character of the area would change with the introduction of construction equipment, construction materials, construction equipment staging areas, construction workers, and clearing of vegetation in the Tres Pinos Creek channel. This change in visual character would be visible to residents living at the residential unit to the northeast of the project site and motorists approaching the project site from the east and west on Panoche Road; however, these activities would be confined to the creek overcrossing and would not degrade the visual characteristics of the open space surrounding the site. Additionally, the change of visual

character at the project site during construction would be temporary in nature and would be returned to preconstruction conditions after completion of the proposed project.

As detailed in the *Visual Impact Assessment* completed by LSA, which is provided in Appendix A, the existing three-span bridge along Panoche Road is 87 ft long and 16 ft wide, with nonstandard bridge barriers between 27 and 32 inches in height consisting of a combination of side-mounted metal beam guard railing and steel grating. The new two-span bridge would be approximately 132 ft long with two equal spans and 35 ft wide (two 12 ft wide lanes with adjacent 4 ft wide paved shoulders on each side) and would include solid concrete Manual for Assessing Safety Hardware (MASH) approved Caltrans Standard Type 836 barriers approximately 36 inches in height. A shorter-length alternative crash cushion system would be installed at the northwest corner of the new bridge to maintain access to a residential gated driveway adjacent to the project boundary. The new bridge type is a CIP pre-stressed concrete slab with a structure depth of 2 ft. A retaining wall would be constructed against the hillside east of the creek and south of the roadway to minimize excavation into the hillside. RSP would be placed on the banks of Tres Pinos Creek to protect the abutment from hydraulic scour. The RSP blanket would continue upstream on the east bank to mitigate for increased channel velocities (in the vicinity of the natural spring) that result from removing the existing bridge and widening the channel with the longer bridge (LSA 2021).

Although the proposed project would result in some visual differences compared to the existing bridge and roadway, the visual character of the site would remain similar to existing conditions because there would be no change to the existing land use. Additionally, implementation of the proposed project would be confined to the creek overcrossing and roadway approaches and would not degrade the visual characteristics of the open space surrounding the site. Therefore, implementation of the proposed project would not adversely affect a scenic vista, nor would it substantially degrade the existing visual character or quality of public views of the site and its surroundings. As such, impacts would be less than significant, and no mitigation is required.

Significance Determination: Less Than Significant Impact

Mitigation/Compliance Measures: No mitigation is required.

Significance Determination after Mitigation/Compliance: Less Than Significant Impact

d. Would the project create a new source of substantial light or glare which would adversely affect day or nighttime views in the area?

The proposed project site is located in a rural area of San Benito County with minimal existing sources of light and glare. Existing sources of light and glare include headlights/taillights of vehicles traveling along Panoche Road and the adjacent single-family residential unit and ancillary structures located on APN 0271500030. No new permanent source(s) of light or glare would be introduced as part of the proposed project. All temporary construction-related sources of light or glare (i.e., construction equipment headlights/safety lights) would cease following completion of construction. Replacement of the bridge would not generate any additional traffic that could increase light or glare in the rural area. The proposed project would therefore not create a new

source of substantial light or glare that would adversely affect daytime or nighttime views in the area. As such, impacts would be less than significant, and no mitigation is required.

Significance Determination: Less Than Significant Impact

Mitigation/Compliance Measures: No mitigation is required.

Significance Determination after Mitigation/Compliance: Less Than Significant Impact

4.2 AGRICULTURE AND FORESTRY RESOURCES

In determining whether impacts to agricultural resources are significant environmental effects, Lead Agencies may refer to the California Agricultural Land Evaluation and Site Assessment Model (1997) prepared by the California Department of Conservation (DOC) as an optional model to use in assessing impacts on agriculture and farmland. In determining whether impacts to forest resources, including timberland, are significant environmental effects, Lead Agencies may refer to information compiled by CAL FIRE regarding the State's inventory of forest land, including the Forest and Range Assessment Project and the Forest Legacy Assessment Project, as well as the forest carbon measurement methodology provided in Forest Protocols adopted by the California Air Resources Board.

	Potentially Significant Impact	Less Than Significant with Mitigation Incorporated	Less Than Significant Impact	No Impact
Would the project:				
a. Convert Prime Farmland, Unique Farmland, or Farmland of Statewide Importance (Farmland), as shown on the maps prepared pursuant to the Farmland Mapping and Monitoring Program of the California Resources Agency, to non-agricultural use?	☐	☐	☐	☒
b. Conflict with existing zoning for agricultural use, or a Williamson Act contract?	☐	☐	☐	☒
c. Conflict with existing zoning for, or cause rezoning of, forest land (as defined in Public Resources Code Section 12220(g)), timberland (as defined by Public Resources Code Section 4526), or timberland zoned Timberland Production (as defined by Government Code Section 51104(g))?	☐	☐	☐	☒
d. Result in the loss of forest land or conversion of forest land to non-forest use?	☐	☐	☐	☒
e. Involve other changes in the existing environment which, due to their location or nature, could result in conversion of Farmland, to non-agricultural use or conversion of forest land to non-forest use?	☐	☐	☒	☐

a. Would the project convert Prime Farmland, Unique Farmland, or Farmland of Statewide Importance (Farmland) as shown on the maps prepared pursuant to the Farmland Mapping and Monitoring Program of the California Resources Agency, to non-agricultural use?

The DOC Farmland Mapping and Monitoring Program (FMMP) reports biannually on the conversion of farmland and grazing land, and compiles important farmland maps and data for each county within the State. These maps categorize land use into the following nine categories to describe farmland and nonfarmland:

- Prime Farmland
- Farmland of Statewide Importance
- Unique Farmland
- Farmland of Local Importance

- Grazing Land
- Urban and Built Up Land
- Other Land
- Water
- Area Not Mapped

Per the CEQA Guidelines, impacts to the following Important Farmland categories must be evaluated:

- **Prime Farmland** is irrigated land with the best combination of physical and chemical features able to sustain long-term production of agricultural crops. This land has the soil quality, growing season, and moisture supply needed to produce sustained high yields.

- **Unique Farmland** is land with lesser-quality soils used for the production of the State's leading agricultural crops. This land is usually irrigated, but may include non-irrigated orchards or vineyards as found in some climatic zones in California.

- **Farmland of Statewide Importance** is irrigated land similar to Prime Farmland that has a good combination of physical and chemical characteristics for the production of agricultural crops. This land has minor shortcomings, such as greater slopes or less ability to store soil moisture than Prime Farmland.

- **Farmland of Local Importance** is land of importance to the local agricultural economy as determined by each county's board of supervisors and a local advisory committee.

The proposed project site and surrounding areas are not designated as an Important Farmland category (i.e., Prime Farmland, Unique Farmland, or Farmland of Statewide or Local Importance) according to the FMMP. The project site and surrounding areas are designated as Grazing Land and Other Land according to the FMMP. As such, implementation of the proposed project would not convert Important Farmland to non-agricultural use. No impact would occur and no mitigation is required.

Significance Determination: No Impact

Mitigation/Compliance Measures: No mitigation is required.

Significance Determination after Mitigation/Compliance: No Impact

b. Would the project conflict with existing zoning for agricultural use, or a Williamson Act contract?

The California Land Conservation Act of 1965 (the Williamson Act) is a voluntary program that incentivizes the preservation of farmland. According to the San Benito County WebGIS Viewer, the project site is not under a Williamson Act contract (County of San Benito n.d.).

The project site is zoned as Agricultural Rangeland according to the San Benito County Zoning Code. The intent of this district is to provide for areas within the county to be used for agricultural

rangeland purposes as set forth in the general plan. The majority of improvements would occur within an existing prescription easement on Parcel 0271500030. It is anticipated that the proposed project would likely require a temporary construction easement for adjacent properties zoned as Agricultural Rangeland during construction. The temporary construction easements for adjacent properties would be obtained by the County for access during bridge and roadway construction work for a contractor staging area, materials storage, and construction operations prior the commencement of construction activities. These activities would be temporary in nature and would cease upon completion of construction. Therefore, implementation of the proposed project would not conflict with the existing Agricultural Rangeland zoning designation of the area due to existing prescription easements. No impact would occur and no mitigation is required.

Significance Determination: No Impact

Mitigation/Compliance Measures: No mitigation is required.

Significance Determination after Mitigation/Compliance: No Impact

c. Would the project conflict with existing zoning for, or cause rezoning of, forest land (as defined in Public Resources Code Section 12220(g)), timberland (as defined by Public Resources Code Section 4526), or timberland zoned Timberland Production (as defined by Government Code Section 51104(g))?

The proposed project is not located on forest land or timberland, and would not conflict with existing zoning for, or cause rezoning of, forest land, timberland, or timberland zoned as Timberland Production. Implementation of the proposed project would result in no impact to forest land and no mitigation is required.

Significance Determination: No Impact

Mitigation/Compliance Measures: No mitigation is required.

Significance Determination after Mitigation/Compliance: No Impact

d. Would the project result in the loss of forest land or conversion of forestland to non-forest use?

The proposed project is not located on forest land and would not result in the loss of forest land or conversion of forest land to nonforest use. Implementation of the proposed project would result in *no impact* to forest land and no mitigation is required.

Significance Determination: No Impact

Mitigation/Compliance Measures: No mitigation is required.

Significance Determination after Mitigation/Compliance: No Impact

e. Would the project involve other changes in the existing environment which, due to their location or nature, could result in conversion of Farmland, to non-agricultural use or conversion of forest land to non-forest use?

As previously discussed, the proposed project would likely require a temporary construction easement for adjacent properties zoned as Agricultural Rangeland during construction. However, this acquisition would be temporary in nature and would occur in a linear strip along the edge of the existing road, which would not significantly affect the viability of agricultural operations. No forest land exists on the project site or on adjacent parcels. Therefore, the proposed project would not involve other changes in the existing environment that could result in conversion of farmland to a non-agricultural use or of forest land to a non-forest use. Impacts would be less than significant and no mitigation is required.

Significance Determination: Less Than Significant Impact

Mitigation/Compliance Measures: No mitigation is required.

Significance Determination after Mitigation/Compliance: Less Than Significant Impact

4.3 AIR QUALITY

Where available, the significance criteria established by the applicable air quality management district or air pollution control district may be relied upon to make the following determinations.

	Potentially Significant Impact	Less Than Significant with Mitigation Incorporated	Less Than Significant Impact	No Impact
Would the project:				
a. Conflict with or obstruct implementation of the applicable air quality plan?	☐	☐	☒	☐
b. Result in a cumulatively considerable net increase of any criteria pollutant for which the project region is non-attainment under an applicable federal or state ambient air quality standard?	☐	☐	☒	☐
c. Expose sensitive receptors to substantial pollutant concentrations?	☐	☐	☒	☐
d. Result in other emissions (such as those leading to odors) adversely affecting a substantial number of people?	☐	☐	☒	☐

a. Would the project conflict with or obstruct implementation of the applicable air quality plan?

The proposed project is located in San Benito County and is within the jurisdiction of the Monterey Bay Air Resources District (MBARD), which regulates air quality in Monterey, Santa Cruz, and San Benito counties. Air quality in the planning area is not only affected by various emission sources (mobile, industry, etc.), but also by atmospheric conditions such as wind speed, wind direction, temperature, and rainfall.

Within the MBARD, ambient air quality standards for ozone, carbon monoxide (CO), nitrogen dioxide (NO_2), sulfur dioxide (SO_2), particulate matter less than 2.5 microns in diameter ($PM_{2.5}$) and less than 10 microns in diameter (PM_{10}), and lead have been set by both the State of California and the federal government. The State has also set standards for sulfate and visibility. The MBARD is under State non-attainment status for ozone and PM_{10}.

An air quality plan describes air pollution control strategies to be taken by counties or regions classified as nonattainment areas. The main purpose of an air quality plan is to bring a nonattainment area into compliance with the requirements of federal and State air quality standards. The air quality plan uses the assumptions and projections provided by local planning agencies to determine control strategies for achieving regional air quality compliance. The most recent MBARD plan for attaining California ambient air quality standards is the 2012–2015 Air Quality Management Plan (AQMP), which was adopted on March 15, 2017. The AQMP documents the MBARD's progress toward attaining the State ozone standard.

For a project to be consistent with the AQMP, the pollutants emitted from the project must not exceed the MBARD significance thresholds or cause a significant impact to air quality. As discussed below, implementation of the proposed project would not result in the generation of criteria air pollutants that would exceed MBARD thresholds of significance. Therefore, the proposed project

would not conflict with or obstruct implementation of the applicable air quality plan. Impacts would be less than significant and no mitigation is required.

Significance Determination: Less Than Significant Impact

Mitigation/Compliance Measures: No mitigation is required.

Significance Determination after Mitigation/Compliance: Less Than Significant Impact

b. Would the project result in a cumulatively considerable net increase of any criteria pollutant for which the project region is non-attainment under an applicable federal or state ambient air quality standard?

The MBARD is designated as nonattainment for ozone and $PM_{2.5}$ for State standards. The MBARD's nonattainment status is attributed to the region's development history. Past, present, and future development projects contribute to the region's adverse air quality impacts on a cumulative basis. By its very nature, air pollution is largely a cumulative impact. No single project is sufficient in size to, by itself, result in nonattainment of ambient air quality standards. Instead, a project's individual emissions contribute to existing cumulatively significant adverse air quality impacts. If a project's contribution to the cumulative impact is considerable, then the project's impact on air quality would be considered significant.

In developing thresholds of significance for air pollutants, the MBARD considered the emission levels for which a project's individual emissions would be cumulatively considerable. If a project exceeds the identified significance thresholds, its emissions would be cumulatively considerable, resulting in significant adverse air quality impacts to the region's existing air quality conditions. The following analysis assesses the potential project-level construction- and operation-related air quality impacts.

Short-Term Construction Emissions. During construction, short-term degradation of air quality may occur due to the release of particulate matter emissions (i.e., fugitive dust) generated by grading, hauling, and other activities. Emissions from construction equipment are also anticipated and would include CO, nitrogen oxides (NO_X), reactive organic gases (ROG), directly-emitted particulate matter ($PM_{2.5}$ and PM_{10}), and toxic air contaminants (TACs) such as diesel exhaust particulate matter.

Site preparation and project construction would involve grading, paving, and other activities. Construction-related effects on air quality from the proposed project would be greatest during the site preparation phase due to the disturbance of soils. If not properly controlled, these activities would temporarily generate particulate emissions. Sources of fugitive dust would include disturbed soils at the construction site. Unless properly controlled, vehicles leaving the site would deposit dirt and mud on local streets, which could be an additional source of airborne dust after it dries. PM_{10} emissions would vary from day to day, depending on the nature and magnitude of construction activity and local weather conditions. PM_{10} emissions would depend on soil moisture, silt content of soil, wind speed, and the amount of operating equipment. Larger dust particles would settle near the source, while fine particles would be dispersed over greater distances from the construction site.

In addition to dust-related PM_{10} emissions, heavy trucks and construction equipment powered by gasoline and diesel engines would generate CO, SO_2, NO_x, ROGs, and some soot particulate ($PM_{2.5}$ and PM_{10}) in exhaust emissions. If construction activities were to increase traffic congestion in the area, CO and other emissions from traffic would increase slightly while those vehicles were delayed. These emissions would be temporary and limited to the immediate area surrounding the construction site.

Project construction emissions were analyzed using the Sacramento Metropolitan Air Quality Management District's Road Construction Emissions Model (RoadMod), Version 9.0.01. Construction is expected to begin in spring 2025 and would be 13 months in duration, which was included in RoadMod. In addition, approximately 2,000 cubic yards (cy) of export would be required, which was also included in RoadMod. The anticipated average number of workers per day on the construction site is 5 to 10; therefore, this analysis conservatively assumes there would be 10 construction workers per day. Construction-related emissions are presented in Table 4.A. Detailed calculations are provided in Appendix B.

Table 4.A: Project Construction Emissions in Tons per Year

Project Construction	ROG	NO_X	CO	PM_{10}	$PM_{2.5}$
Maximum Project Emissions	6.5	61.7	59.2	34.5	8.9
MBARD Thresholds	137.0	137.0	550.0	82.0	55.0
Exceed Threshold?	**No**	**No**	**No**	**No**	**No**

Source: LSA (May 2022).
CO = carbon monoxide
MBARD = Monterey Bay Air Resources District
NO_X = nitrogen oxides
$PM_{2.5}$ = particulate matter less than 2.5 microns in diameter
PM_{10} = particulate matter less than 10 microns in diameter
ROG = reactive organic gases

As shown in Table 4.A, construction emissions associated with the project would not exceed the MBARD's thresholds for ROG, NO_x, CO, PM_{10}, or $PM_{2.5}$ emissions. Therefore, construction of the proposed project would not result in a cumulatively considerable net increase of ozone or PM_{10} or any criteria pollutant for which the project region is in nonattainment under an applicable federal or State ambient air quality standard, and impacts would be less than significant with mitigation incorporated.

Long-Term (Operational) Emissions. Long-term air emission impacts are associated with stationary sources and mobile sources. Stationary-source emissions result from the consumption of natural gas and electricity. Mobile-source emissions result from vehicle trips and result in air pollutant emissions affecting the entire air basin. The proposed project would replace the existing two-lane bridge by constructing a wider bridge that meets current County, Caltrans, and AASHTO requirements. The project would not generate additional vehicle trips through the project area and, therefore, would not increase mobile-source emissions. The proposed project would not include any stationary-source emissions. Therefore, operation of the proposed project would not result in a cumulatively considerable net increase of ozone or PM_{10} or any criteria pollutant for which the project region is in nonattainment under an applicable federal or State ambient air quality standard. Impacts would be less than significant and no mitigation is required.

Significance Determination: Less Than Significant Impact

Mitigation/Compliance Measures: No mitigation is required.

Significance Determination after Mitigation/Compliance: Less Than Significant Impact

c. Would the project expose sensitive receptors to substantial pollutant concentrations?

Sensitive receptors include residences, schools, playgrounds, childcare centers, convalescent centers, retirement homes, and athletic fields. Construction activities (i.e., operation of diesel-fueled vehicles and equipment) can expose sensitive receptors to airborne particulates and fugitive dust as well as a small quantity of construction equipment pollutants.

The nearest sensitive receptor is approximately 315 ft east of the project site. Construction activities associated with the proposed project may expose surrounding sensitive receptors to airborne particulates, as well as a small quantity of construction equipment pollutants (i.e., usually diesel-fueled vehicles and equipment). However, as identified in Table 4.A, above, project construction emissions would be below the MBARD's significance thresholds. Additionally, due to the linear nature of the project, construction activities at any one receptor location would occur for a limited duration. The proposed project does not include any permanent stationary sources of emissions. Once the proposed project is constructed, the project would not be a significant source of long-term operational emissions. Therefore, the proposed project would not expose sensitive receptors to substantial pollutant concentrations. Potential impacts would be considered less than significant and no mitigation is required.

Significance Determination: Less Than Significant Impact

Mitigation/Compliance Measures: No mitigation is required.

Significance Determination after Mitigation/Compliance: Less Than Significant Impact

d. Would the project result in other emissions (such as those leading to odors) adversely affecting a substantial number of people?

During construction, the various diesel-powered vehicles and equipment in use on site would create localized odors. These odors would be temporary and are not likely to be noticeable for extended periods of time beyond the project site. The potential for diesel odor impacts is therefore considered less than significant. In addition, once the project is operational, it would not be a source of odors. Therefore, the proposed project would not result in other emissions (such as those leading to odors) adversely affecting a substantial number of people, and potential impacts would be considered less than significant.

Significance Determination: Less Than Significant Impact

Mitigation/Compliance Measures: No mitigation is required.

Significance Determination after Mitigation/Compliance: Less Than Significant Impact

4.4 BIOLOGICAL RESOURCES

	Potentially Significant Impact	Less Than Significant with Mitigation Incorporated	Less Than Significant Impact	No Impact
Would the project:				
a. Have a substantial adverse effect, either directly or through habitat modifications, on any species identified as a candidate, sensitive, or special-status species in local or regional plans, policies, or regulations, or by the California Department of Fish and Game or U.S. Fish and Wildlife Service?	☐	☒	☐	☐
b. Have a substantial adverse effect on any riparian habitat or other sensitive natural community identified in local or regional plans, policies, regulations or by the California Department of Fish and Game or U.S. Fish and Wildlife Service?	☐	☒	☐	☐
c. Have a substantial adverse effect on state or federally protected wetlands (including, but not limited to, marsh, vernal pool, coastal, etc.) through direct removal, filling, hydrological interruption, or other means?	☐	☒	☐	☐
d. Interfere substantially with the movement of any native resident or migratory fish or wildlife species or with established native resident or migratory wildlife corridors, or impede the use of native wildlife nursery sites?	☐	☒	☐	☐
e. Conflict with any local policies or ordinances protecting biological resources, such as a tree preservation policy or ordinance?	☐	☒	☐	☐
f. Conflict with the provisions of an adopted Habitat Conservation Plan, Natural Community Conservation Plan, or other approved local, regional, or state habitat conservation plan?	☐	☐	☐	☒

The analysis provided in this section is based on the Natural Environmental Study (NES) (LSA 2021) and Biological Assessment (BA) (LSA 2021), provided in Appendix C. For the purpose of the Biological Resources section, the project area is referred to as the Biological Study Area (BSA), which encompasses 3.66 ac, including the project footprint and adjacent areas that may directly or indirectly be affected by the project.

a. Would the project have a substantial adverse effect, either directly or through habitat modifications, on any species identified as a candidate, sensitive, or special-status species in local or regional plans, policies, or regulations, or by the California Department of Fish and Game or U.S. Fish and Wildlife Service?

The BSA predominantly consists of Panoche Road, and natural lands, including Tres Pinos Creek and its associated riparian corridor. The most biologically diverse area within the BSA is located along the Tres Pinos Creek channel. This area is dominated by the following natural communities: California annual grassland series, arroyo willow series, mixed oak series, mulefat series, riverine, and riverine wetlands. A concrete low-water crossing is also present just upstream of the existing bridge. Outside the Tres Pinos Creek floodplain, the BSA is dominated by paved roads, a small amount of pasture,

and part of a rural residence. Natural communities comprise 3.02 ac of the BSA, while 0.01 ac is made up of pasture and 0.63 ac consists of developed areas.

The following electronic databases and agency communications were reviewed for species that could potentially occur in the vicinity of the BSA:

- California Natural Diversity Database (CNDDB) Rarefind 5 (CDFW 2021)
- California Native Plant Society (CNPS) Online Inventory of Rare and Endangered Plants of California (CNPS 2021)
- United States Fish and Wildlife Service (USFWS) Information for Planning and Consultation (IPaC) Trust Resources Report (USFWS 2021)
- National Marine Fisheries Service (NMFS) (NMFS 2020)

A general biological field survey was conducted by LSA on May 11, 2011, to assess the biological condition of the BSA for the presence of various special-status biological resources, including plants, wildlife, and habitat suitability for special-status species. A follow-up survey to document any changes in field conditions was conducted on April 16, 2020. In addition, LSA conducted a focused plant survey for Munz's tidy tips (*Layia munzii*), chaparral ragwort (*Senecio aphanactis*), and marsh sandwort (*Arenaria paludicola*) (May 18, 2011, and April 16, 2020); a Jurisdictional Delineation (July 6, 2011, and April 16, 2020); and a habitat assessment for California red-legged frog and California tiger salamander (May 11, 2011, and April 16, 2020).

Based on the database review and professional knowledge of species that may occur in the region, 65 special-status plant and animal occurrences were identified that could potentially occur within the BSA. Of the 65 special-status species identified, only the following 8 species have suitable habitat present in the BSA and are discussed in further detail below: Cooper's hawk (*Accipiter cooperii*), western burrowing owl (*Athene cunicularia*), prairie falcon (*Falco mexicanus*), Pacific pond turtle (*Emys marmorata*), San Joaquin whipsnake (*Masticophis flagellum ruddocki*), coast horned lizard (*Phrynosoma blainvillii*), California red-legged frog (CRLF) (*Rana draytonii*), and South Central California Coast (SCCC) steelhead (*Oncorhynchus mykiss*). Other migratory birds are also discussed. No suitable habitat was found to be present in the BSA for the remaining 57 special-species; therefore, they are not discussed further.

Cooper's Hawk and Other Migratory Birds. Disturbance of Cooper's hawk and other migratory birds during their nesting season (February 1 to September 15) could result in "take," which is prohibited under the Migratory Bird Treaty Act (MBTA) and Section 3513 of the California Fish and Game Code. California Fish and Game Code (Section 3503) also prohibits take or destruction of bird nests or eggs.

Cooper's hawks (*Accipiter cooperii*) are on the California Department of Fish and Wildlife (CDFW) watch list for nesting but have no other formal status. In California, they are primarily year-long residents and are found throughout most of the wooded portion of the State. Cooper's hawks favor riparian areas and those near open water for nesting, and often use broken woodlands and habitat edges for hunting. These hawks build stick nests in dense stands of live oak, riparian deciduous

forest, and occasionally coniferous forest, usually near a stream. Breeding season is March through August, with peak activity occurring in May through July. Young are dependent on adults for 30 to 40 days after fledging.

The CNDDB includes four records for Cooper's hawk within the record search area. The records are all more than 10 mi to the southwest in Pinnacles National Monument. The BSA supports oaks and other trees that provide potential nesting habitat for Cooper's hawk. The arroyo willow series and habitat edges in and adjacent to the BSA provide potential foraging habitat. No Cooper's hawks were observed during any of the field visits; however, there is a possibility this species could occur. The riparian vegetation in the BSA and vegetation in the surrounding areas also provide nesting habitat for other migratory birds.

The project would result in permanent impacts to 0.19 ac and temporarily disturb 0.07 ac of arroyo willow habitat, which is potential foraging habitat for Cooper's hawk. Additionally, the project would remove 0.09 ac and temporarily disturb 0.08 ac of mixed oak habitat, which is potential nesting habitat for this species. The project could also result in temporary impacts to Cooper's hawk attempting to nest in the vicinity of the project, as construction activities could potentially discourage nesting.

Implementation of **Mitigation Measure BIO-1** requires avoiding tree removal and other work activities during the nesting season, if possible; conducting preconstruction surveys for nesting Cooper's hawks and other migratory birds prior to any work during the nesting season; obtaining a qualified biologist for on-site monitoring; and coordinating with CDFW and Caltrans for work occurring near any active nests found within 500 ft of the BSA to ensure avoidance of any "take." Implementation of **Mitigation Measure BIO-1** would reduce potential construction-related impacts, both permanent and temporary in nature, on Cooper's hawks and other nesting migratory birds to a less than significant level.

Western Burrowing Owl. The western burrowing owl is a California species of concern. It has no federal status. Burrowing owls occur in warmer valleys; open, dry grasslands; deserts; and scrublands associated with agriculture and urban areas that support populations of California ground squirrels. Burrowing owls nest below ground, using abandoned burrows of other species (most commonly, ground squirrels) and feed on insects and small mammals.

The CNDDB includes a single record for this species, dated 2002, from approximately 4 mi northwest of the BSA. The annual grassland within the BSA provides potential foraging habitat for the burrowing owl; however, no burrows of suitable size are present in the BSA, and no signs of owl presence were observed during the field visits. However, this species could occur in the BSA.

The project would permanently impact 0.23 ac and temporarily disturb 0.45 ac of annual grassland habitat, which is potential foraging habitat for western burrowing owl. Permanent impacts would occur as a result of project cut and fill activities; temporary impacts would occur as a result of project staging during construction activities.

Implementation of **Mitigation Measure BIO-2** would require revegetation of temporarily disturbed annual grassland with a native seed mix to ensure temporary impact areas within western

burrowing owl foraging habitat are restored to pre-project conditions. Implementation of **Mitigation Measure BIO-2** would reduce potential construction-related impacts, both temporary and permanent in nature, on western burrowing owls to a less than significant level.

Prairie Falcon. The prairie falcon is a California species of concern; it has no formal federal status. Prairie falcons inhabit dry, open terrain, either level or hilly. They forage in open areas such as grasslands, savannahs, desert scrub, and agricultural fields. Their diet consists primarily of small mammals and medium-sized birds; reptiles are also eaten. Prey may be captured in the air or on the ground. Nest locations are usually on a cliff overlooking a large, open area. Breeding season is February through mid-September, with peak activity in April to early August.

The prairie falcon is well-documented in the region; the CNDDB includes 15 records of this species within 10 mi of the BSA. The closest record is dated 1977 and is approximately 4 mi northwest of the BSA. More recent records within 10 mi of the BSA, dated 2008, are from approximately 9.5 mi southeast of the BSA. There is no suitable nesting habitat for prairie falcons within the BSA; however, the annual grassland habitat in the BSA provides potential foraging habitat. This species could occur in the BSA.

The project would permanently impact 0.23 ac and temporarily disturb 0.45 ac of annual grassland habitat, which is potential foraging habitat for prairie falcons. Permanent impacts would occur as a result of project cut and fill activities; temporary impacts would occur as a result of project staging during construction activities.

Implementation of **Mitigation Measure BIO-2** would require the revegetation of temporarily disturbed annual grassland with a native seed mix to ensure temporary impact areas within prairie falcon foraging habitat are restored to pre-project conditions. Implementation of **Mitigation Measure BIO-2** would reduce potential construction-related impacts, both temporary and permanent in nature, on prairie falcons to a less than significant level.

Pacific Pond Turtle. The Pacific pond turtle is a State species of concern; it has no federal status. The species ranges from western Washington State south to northwestern Baja California. Two subspecies occur in California: the north Pacific pond turtle (*E.m. marmorata*); and the south Pacific pond turtle (*E.m. pallida*). The BSA is within the range of intergradations between the two subspecies. The pond turtle is a highly aquatic species found in ponds, marshes, rivers, streams, and irrigation ditches that typically have rocky or muddy bottoms and support aquatic vegetation. Eggs are laid at upland sites, away from the water, from April through August.

The CNDDB includes five records of Pacific pond turtle within the nine-quad record search area; a record from 1993 is from approximately 0.25 mi from the BSA, upstream in Tres Pinos Creek. Additionally, during the July 2011 site visit, three adult Pacific pond turtles were observed in Tres Pinos Creek 90 ft downstream of the BSA. The reach of Tres Pinos Creek within the BSA provides habitat for the Pacific pond turtle, and the species is present in the area. This species is likely to occur in the BSA.

The project would result in permanent impacts to 0.10 acre of riverine and riverine wetlands that provide aquatic habitat for Pacific pond turtle due to installation of RSP and the new bridge's

concrete pier. The project would also result in temporary impacts to 0.14 ac of aquatic habitat due to stream diversion and the placement of temporary falsework. Indirect effects may occur due to potential degradation of water quality until the plants in the revegetated area are established.

Implementation of **Mitigation Measures BIO-2 and BIO-3 and Compliance Measure WQ-1** would require restoration of temporarily disturbed areas to preconstruction contours and revegetation of disturbed areas with a native seed mix to ensure temporary impact areas are restored to pre-project conditions; preconstruction surveys for Pacific pond turtles; relocation of any turtles identified within the BSA, if approved by the United States Fish and Wildlife Service (USFWS) and/or CDFW; and compliance with the Construction General Permit, which includes preparation of a Stormwater Pollution Prevention Plan (SWPPP). Implementation of **Mitigation Measures BIO-2 and BIO-3 and Compliance Measure WQ-1** would reduce potential construction-related impacts, both temporary and permanent in nature, on Pacific pond turtles to a less than significant level.

San Joaquin Whipsnake. The San Joaquin whipsnake is a State species of concern; it has no federal status. It inhabits the Sacramento and San Joaquin Valleys from Colusa County to Kern County and westward to the inner South Coast Ranges. An isolated population occurs in the Sutter Buttes. It is found at elevations of 60 ft up to 3,000 ft. This snake occurs in open, dry, treeless areas, including grassland and saltbush scrub, and seeks cover in rodent burrows, under shaded vegetation, and under surface objects such as rocks or logs.

The CNDDB includes seven records of San Joaquin whipsnake within the nine-quad search area. The closest record is dated 1993 and is from approximately 4.5 mi west of the BSA. The most recent record is dated 1994 and is from approximately 7.5 mi west-southwest of the BSA. The California annual grassland and the edges of the mixed oak series provide habitat for the San Joaquin whipsnake; therefore, this species could be present.

The project would result in permanent impacts to a combined total of 0.32 ac of annual grassland and mixed oak habitat, which is suitable for San Joaquin whipsnake, as a result of project cut and fill activities. Temporary impacts to suitable whipsnake habitat, totaling 0.53 ac, would also occur as a result of project staging and through the cutting back of vegetation to provide access routes during construction activities.

Implementation of **Mitigation Measures BIO-2 and BIO-3** would require restoration of temporarily disturbed areas to preconstruction contours and revegetation of disturbed areas with a native seed mix to ensure temporary impact areas within San Joaquin whipsnake habitat are restored to pre-project conditions, as well as preconstruction surveys for San Joaquin Whipsnake by a qualified biologist prior to any ground-disturbing activities. Implementation of **Mitigation Measures BIO-2 and BIO-3** would reduce potential construction-related impacts, both temporary and permanent in nature, on San Joaquin whipsnake to a less than significant level.

Coast Horned Lizard. The coast horned lizard is a State species of concern but has no federal status. It occurs in a variety of open habitats with scattered low shrubs, including grassland, chaparral, and open pine, oak, and pinyon-juniper woodlands. Sandy areas, washes, floodplains, and wind-blown deposits provide favorable conditions. It is sometimes found along dirt roads and frequently found near ant hills. This lizard ranges from Butte County to Kern County in the Sierra Nevada foothills, and

throughout the central and southern California coast. The coast horned lizard forages on the ground in open areas, usually between shrubs and often near ant nests.

The CNDDB includes a single record, dated 1993, for coast horned lizard within the nine-quad search area. This occurrence observed a single lizard approximately 0.8 mi to the west of the BSA along Panoche Road. The California annual grassland and the edges of the mixed oak series provide potential habitat for the coast horned lizard; this species could occur in the BSA.

The project would result in permanent impact to a combined total of 0.32 ac of annual grassland and mixed oak habitat, which is suitable for coast horned lizard, as a result of project cut and fill activities. Temporary impacts to suitable coast horned lizard habitat, totaling 0.53 ac, would also occur as a result of project staging and through the cutting back of vegetation to provide access routes and during construction activities.

Implementation of **Mitigation Measures BIO-2 and BIO-3** would require restoration of disturbed slopes to preconstruction contours and revegetation of disturbed areas with a native seed mix to ensure temporary impact areas within Coast horned lizard habitat are restored to pre-project conditions as well as preconstruction surveys for Coast Horned Lizard by a qualified biologist prior to any ground-disturbing activities. Implementation of **Mitigation Measures BIO-2 and BIO-3** would reduce potential construction-related impacts, both temporary and permanent in nature, on coast horned lizards to a less than significant level.

California Red-Legged Frog. The CRLF is a federally listed threatened species and a State species of concern. CRLF inhabits lowlands and foothills in or near permanent sources of water. They prefer ponds, creeks, or marshes with extensive shoreline vegetation. Intermittent streams provide suitable habitat if some surface water remains through the summer.

Suitable aquatic breeding habitat and upland habitat are both present in the BSA, and the BSA is located within critical habitat Unit SNB-2 for CRLF. Three frogs were observed under the bridge during the July 2011 site visit. They were thought to be CRLF, but due to shadows and vegetation, a positive identification was not made. No CRLF were observed during the April 2020 site visit. The CNDDB includes 11 records of CRLF in the nine-quad search area. The nearest record is dated 2005 and is from 0.15 mi upstream of the BSA on Tres Pinos Creek. Although there are no CNDDB records from within the BSA, this species is well documented in the Tres Pinos Creek watershed.

The project would result in permanent impacts to 0.10 ac of riverine and riverine wetlands that provide suitable aquatic breeding habitat for CRLF. The project also would result in temporary impacts to 0.14 ac of aquatic breeding habitat for one season. Permanent habitat loss is due to installation of RSP and the concrete pier; temporary impacts are due to stream diversion and placement of temporary falsework. Additionally, the project would result in permanent impacts to 0.54 ac and temporary impacts to 0.62 ac of upland habitat for CRLF. Permanent habitat loss is due to installation of foundations, wingwalls, etc.; temporary impacts would be due to project staging, cutting of vegetation to provide access routes, and other temporary construction disturbance. Since the BSA is within designated critical habitat for CRLF and the habitats in the BSA contain physical and biological features (PBFs) for CRLF critical habitat, the impacts described above can also be considered impacts to critical habitat for CRLF.

Implementation of **Mitigation Measures BIO-2, BIO-4, BIO-5, BIO-10, and Compliance Measure WQ-1,** would require restoration of disturbed areas to preconstruction contours and revegetation of disturbed areas with the native seed mix specified in Table 4.B; implementation of the provisions of the CRLF "Programmatic Biological Opinion for Projects Funded or Approved under the Federal Highway Administration's Federal Aid Program (8-8-10-F-58)", which would require restoration of temporary impact habitat contours to original configuration and revegetation of disturbed areas with a native seed mix to ensure temporary impact areas within CRLF habitat are restored to pre-project conditions; preconstruction surveys by a USFWS-approved qualified biologist prior to construction; proper relocation of any CRLF; worker awareness training of all construction personnel; managing and regularly removing all trash from the worksite; maintaining at least a 60 ft setback from riparian habitat for refueling, maintenance, and staging equipment; limiting the construction area to the minimum area necessary to achieve the project goal; appropriately scheduling work activities; properly diverting water around the in-stream construction area; avoiding impounding water in a manner that may attract CRLF; removal of exotic species from the BSA; avoiding the use of herbicides and implementing protective measures if herbicides must be used; properly revegetating the areas where RSP would be installed; use of a tarp or other protective structure to prevent debris from entering Tres Pinos Creek during removal of the existing bridge; and compliance with the Construction General Permit and preparation of a SWPPP. Implementation of **Mitigation Measures BIO-2, BIO-4, BIO-5, BIO-10, and Compliance Measure WQ-1** would reduce potential construction-related impacts, both temporary and permanent in nature, on CRLF to a less than significant level.

South Central California Coast Steelhead. The South Central California Coast (SCCC) steelhead (*Oncorhynchus mykiss*) is federally listed as threatened; it has no State status. Steelhead are anadromous fish that spend part of their lifecycle in freshwater and part in salt water. Spawning occurs in small, freshwater streams where the young remain from one to several years before migrating to the ocean to feed and grow. Steelhead require clean, cold, well-oxygenated streams for spawning. Spawning streams must have a substrate of gravel or small cobble to provide safe incubation sites for the eggs. Critical habitat for the SCCC steelhead was established in 2006 and includes the length of the San Benito River within San Benito County.

The BSA is approximately 15 mi upstream of the San Benito River; therefore, the BSA is not located within critical habitat for SCCC steelhead. Within San Benito County, the SCCC steelhead occurs in the San Benito and Pajaro rivers and their tributaries, including Tres Pinos Creek. Additionally, according to the NMFS, the species is intermittently present in the reach of Tres Pinos Creek within the BSA. SCCC steelhead fingerlings were observed in Tres Pinos Creek during the May 11, 2011, general biological survey. Observation of the fish was incidental and not part of a larger survey effort; the number, size, and location of the fish were not documented. Although habitat conditions were largely unchanged during the April 16, 2020, field survey, visibility in pooled areas was minimal due to high cover of floating water primrose. No fish or other aquatic species were observed during this survey.

The project would result in permanent impacts to 0.01 ac of riverine habitat that may provide suitable SCCC steelhead habitat as a result of placement of the bridge support pier and RSP. The project would also result in temporary impacts to 0.02 ac of riverine as a result of construction of

the new bridge, temporary falsework, demolition of the existing bridge, construction access, and in-channel stream diversion. Construction of the support pier and placement of RSP are the only project components anticipated to result in potential for long-term impacts to SCCC steelhead in the form of permanent changes to flow velocity and stream depth. In order to address these potential adverse effects to SCCC steelhead, a hydraulic analysis was prepared (Appendix G of the NES [Appendix C]). The analysis found that average channel velocity (feet per second) at two cross sections upstream of the BSA would result in an approximately 2 to 3 ft per second increase in average channel velocity and recommended RSP in the channel to protect against these increases. The size and extent of the RSP shown in the draft plans is expected to protect the channel bank from erosion. The water surface elevation (WSEL) at the upstream face of the bridge for the 100-year storm with the existing bridge in place is 1,796.5 ft; the proposed bridge would have a WSEL of 1,795.0 ft. These changes represent a minimal shift from existing conditions and are not anticipated to result in substantial adverse effects to SCCC steelhead.

Implementation of **Mitigation Measures BIO-2, BIO-3, BIO-6 through 10, HAZ-1, and Compliance Measure WQ-1** would require restoration of disturbed areas to preconstruction contours and revegetation of disturbed areas with a native seed mix to ensure temporary impact areas are restored to pre-project conditions; properly revegetating the areas where RSP would be installed; preconstruction surveys for SCCC steelhead by a qualified biologist prior to construction activities; adherence to in-water work windows; worker awareness training of all construction personnel; properly installing the flow diversion metal pipe; designation of Environmentally Sensitive Areas (ESAs); use of a tarp or other protective structure during removal of the existing bridge to prevent debris from entering Tres Pinos Creek; preparation of an Emergency Response and Cleanup Plan; and compliance with the Construction General Permit and preparation of a SWPPP. Implementation of **Mitigation Measures BIO-2, BIO-3, BIO-6 through BIO-10, HAZ-1, and Compliance Measure WQ-1** would reduce potential construction-related impacts, both temporary and permanent in nature, on SCCC steelhead to a less than significant level.

Overall, implementation of **Mitigation Measures BIO-1 through BIO-10, HAZ-1, and Compliance Measure WQ-1** would reduce potential construction-related impacts, both temporary and permanent in nature, on species identified as a candidate, sensitive, or special-status species in local or regional plans, policies, or regulations, or by the CDFW, NMFS, or USFWS, to a less than significant level. Once constructed, the project would have no operational impacts.

Significance Determination: Potentially Significant Impact

Mitigation/Compliance Measures: In addition to the measures listed below, refer to **Mitigation Measure HAZ-1** in Section 4.9.a and **Compliance Measure WQ-1** in Section 4.10.a.

Mitigation Measure BIO-1 **Nesting Cooper's Hawk and Other Migratory Birds Measures.** The County of San Benito (County) or County contractor shall implement the following measures prior to construction:

1. If possible, all trees that shall be impacted by project construction shall be removed during the nonnesting season (September 16 to January 31), to avoid take of a nest or bird. If

work must begin during the nesting season (February 1 to September 15), a survey for nesting Cooper's hawks and other migratory birds shall be conducted within 500 feet of the Biological Study Area (BSA) by a qualified biologist. The survey shall be conducted a maximum of 10 days prior to the start of construction. The survey area may be decreased due to property access constraints, etc.

2. If nesting Cooper's hawks or other birds are found within 500 ft of the BSA, a qualified biologist shall evaluate the potential for the proposed project to disturb nesting activities. The evaluation criteria shall include, but are not limited to, the location/orientation of the nest in the nest tree, the distance of the nest from the BSA, and line of sight between the nest and the BSA.

   a. The California Department of Fish and Wildlife (CDFW) and the California Department of Transportation (Caltrans) shall be contacted to review the evaluation and determine if the project can proceed without adversely affecting nesting activities.

   b. If work is allowed to proceed, a qualified biologist shall be on site weekly during construction activities that occur during breeding season to monitor nesting activity. The biologist shall have the authority to stop work if it is determined the project is adversely affecting nesting activities.

Mitigation Measure BIO-2 **Revegetation and Restoration to Preconstruction Contours.** Following completion of the new bridge, the County or County contractor shall ensure all areas that are temporarily disturbed shall be restored to preconstruction contours. All disturbed areas including new fill slopes shall be revegetated with the native seed mix specified in Table 4.B.

Table 4.B: Native Species Mix

Scientific Name	Common Name	Rate (pounds per acre)	Minimum Percent Germination
Artemisia douglasiana	Mugwort	2.0	50
Bromus carinatus	California brome	5.0	85
Elymus trachycaulus	Slender wheatgrass	2.0	60
Eschscholzia californica	California poppy	2.0	70
Festuca microstachys	Small fescue	10.0	80
Hordeum brachyantherum	California barley	2.0	80
Lupinus bicolor	Bicolored lupine	4.0	80

Mitigation Measure BIO-3 **Special-Status Species Preconstruction Surveys.** Prior to the start of construction, initial ground disturbance, or vegetation clearing in the Tres Pinos Creek channel or surrounding areas, a qualified biologist shall conduct a preconstruction survey of the work area for special-status species. If special-status species are found, they shall be allowed to leave the work area on their own or, if approved by the United States Fish and Wildlife Service (USFWS) and/or CDFW, the special-status species shall be relocated by the biologist to a safe place outside the work area.

Mitigation Measure BIO-4 **Invasive Plant Species Measures.** During final design, the County or County's engineer shall prepare specifications to avoid the introduction of invasive plant species into the BSA during project construction. At a minimum, this shall include the following measures:

1. All earthmoving equipment to be used during project construction shall be thoroughly cleaned before arriving on the project site.

2. All seeding equipment (i.e., hydroseed trucks) shall be thoroughly rinsed prior to beginning seeding work.

3. To avoid spreading any nonnative invasive species already existing on site to off-site areas, all equipment shall be thoroughly cleaned before leaving the site.

4. To avoid introducing additional nonnative species to the site, all fill dirt brought onto the site must be weed-free.

Mitigation Measure BIO-5 **California Red-Legged Frog Measures.** Prior to construction, the County shall implement the following measures, which implement the provisions of the CRLF "Programmatic Biological Opinion for Projects Funded or Approved under the Federal Highway Administration's Federal Aid Program (8-8-10-F-58)":

1. Only USFWS-approved biologists shall participate in activities associated with the capture, handling, and monitoring of CRLF. Biologists authorized under this biological opinion do not need to re-submit their qualifications for subsequent projects conducted pursuant to this biological opinion, unless the USFWS has revoked their approval at any time during the life of this biological opinion.

2. Ground disturbance shall not begin until written approval is received from the USFWS that the biologist(s) is/are qualified to

conduct the work, unless the individual(s) has/have been approved previously and the USFWS has not revoked that approval.

3. A USFWS-approved biologist shall survey the project site 48 hours before the onset of work activities. If any life stage of the CRLF is found and these individuals are likely to be or injured by work activities, the approved biologist shall be allowed sufficient time to move them from the site before work activities begin. The USFWS-approved biologist shall relocate the CRLF the shortest distance possible to a location that contains suitable habitat and shall not be affected by activities associated with the proposed project. The relocation site should be in the same drainage to the extent practicable. Caltrans shall coordinate with the USFWS on the relocation site prior to the capture of any CRLF. The USFWS-approved biologist shall maintain detailed records of any individuals that are moved (e.g., size, coloration, any distinguishing features, photographs [digital preferred]) to assist him or her in determining whether translocated animals are returning to the original point of capture.

4. Before any activities begin on a project, a USFWS-approved biologist shall conduct a training session for all construction personnel. At a minimum, the training shall include a description of the CRLF and its habitat, the specific measures that are being implemented to conserve the CRLF for the current project, and the boundaries within which the project may be accomplished. Brochures, books, and briefings may be used in the training session, provided that a qualified person is on hand to answer any questions.

5. A USFWS-approved biologist shall be present at the work site until all CRLF have been relocated out of harm's way, workers have been instructed, and disturbance of habitat has been completed. After this time, the State or local sponsoring agency shall designate a person to monitor on-site compliance with all minimization measures. The USFWS-approved biologist shall ensure that this monitor receives the training outlined in number 4 (above) and in the identification of CRLF. If the monitor or the USFWS-approved biologist recommends that work be stopped because CRLF would be affected in a manner not anticipated by the USFWS during review of the proposed action, they shall notify the resident engineer (the engineer who is directly overseeing and in command of construction activities)

immediately. The resident engineer shall either resolve the situation by eliminating the effect immediately or require that all actions causing these effects be halted. If work is stopped, the USFWS shall be notified as soon as is reasonably possible.

6. During project activities, all trash that may attract predators shall be properly contained, removed from the work site, and disposed of regularly. Following construction, all trash and construction debris shall be removed from work areas.

7. All refueling, maintenance, and staging of equipment and vehicles shall occur at least 60 ft from riparian habitat or water bodies and not in a location from where a spill would drain directly toward aquatic habitat (e.g., on a slope that drains away from the water). The monitor shall ensure contamination of habitat does not occur during such operations. Prior to the onset of work, the County shall provide Caltrans with a plan for prompt and effective response to any accidental spills. All workers shall be informed of the importance of preventing spills and of the appropriate measures to take should a spill occur.

8. The number of access routes, size of staging areas, and total area of the activity shall be limited to the minimum necessary to achieve the project goal. Environmentally Sensitive Areas (ESAs) shall be delineated to confine access routes and construction areas to the minimum area necessary to complete construction and minimize the impact to CRLF habitat. This goal includes locating access routes and construction areas outside of wetlands and riparian areas to the maximum extent practicable.

9. The County shall attempt to schedule work activities for times of the year when impacts to CRLF would be minimal. For example, work that would affect large pools that may support breeding would be avoided, to the maximum degree practicable, during the breeding season (November through May). Isolated pools that are important to maintain CRLF through the driest portions of the year would be avoided, to the maximum degree practicable, during the late summer and early fall. Habitat assessments, surveys, and informal consultation between Caltrans and the USFWS during project planning should be used to assist in scheduling work activities to avoid sensitive habitats during key times of the year.

10. If a work site is to be temporarily dewatered by pumping, intakes shall be completely screened with wire mesh not larger than 0.2 inch to prevent CRLF from entering the pump system.

Water shall be released or pumped downstream at an appropriate rate to maintain downstream flows during construction. Upon completion of construction activities, any diversions or barriers to flow shall be removed in a manner that would allow flow to resume with the least disturbance to the substrate. Alteration of the stream bed shall be minimized to the maximum extent possible; any imported material shall be removed from the stream bed upon completion of the project.

11. Unless approved by the USFWS, water shall not be impounded in a manner that may attract CRLF.

12. A USFWS-approved biologist shall permanently remove any individuals of exotic species, such as bullfrogs (*Rana catesbeiana*), signal and red swamp crayfish (*Pacifasticus leniusculus*; *Procambarus clarkii*), and centrarchid fishes, from the project area to the maximum extent possible. The USFWS-approved biologist shall be responsible for ensuring his or her activities are in compliance with the California Fish and Game Code.

13. If the County demonstrates that disturbed areas have been restored to conditions that allow them to function as habitat for CRLF, these areas shall not be included in the amount of total habitat permanently disturbed.

14. To ensure that diseases are not conveyed between work sites by the USFWS-approved biologists, the fieldwork code of practice developed by the Declining Amphibian Populations Task Force shall be followed at all times.

15. Project sites shall be revegetated with an assemblage of native riparian, wetland, and upland vegetation suitable for the area. Locally collected plant materials shall be used to the extent practicable. Invasive, exotic plants shall be controlled to the maximum extent practicable. This measure shall be implemented in all areas disturbed by activities associated with the project unless the USFWS determine that it is not feasible or practical.

16. The County shall not use herbicides as the primary method used to control invasive, exotic plants. However, if the County determines the use of herbicides is the only feasible method for controlling invasive plants at a specific project site, it shall implement the following additional protective measures for the CRLF:

a. The County shall not use herbicides during the breeding season for CRLF.

b. The County shall conduct surveys for CRLF immediately prior to the start of any herbicide use. If found, CRLF shall be relocated to suitable habitat far enough from the project area that no direct contact with herbicides would occur.

c. Giant reed and other invasive plants shall be cut and hauled out by hand and then painted with glyphosate or glyphosate-based products, such as Aquamaster® or Rodeo®.

d. Licensed and experienced County staff or a licensed and experienced contractor shall use a hand-held sprayer for foliar application of Aquamaster® or Rodeo® where large monoculture stands occur at an individual project site.

e. All precautions shall be taken to ensure that no herbicide is applied to native vegetation.

f. Herbicides shall not be applied on or near open-water surfaces (no closer than 60 ft from open water).

g. Foliar applications of herbicide shall not occur when wind speeds are in excess of 3 miles per hour.

h. No herbicides shall be applied within 24 hours of forecasted rain.

i. Application of all herbicides shall be done by qualified County staff or contractors to ensure that overspray is minimized, that all application is made in accordance with label recommendations, and that all required and reasonable safety measures are implemented. A safe dye shall be added to the mixture to visually denote treated sites. Application of herbicides shall be consistent with the United States Environmental Protection Agency's Office of Pesticide Programs, Endangered Species Protection Program county bulletins.

j. All herbicides, fuels, lubricants, and equipment shall be stored, poured, or refilled at least 60 ft from riparian habitat or water bodies in a location where a spill would not drain directly toward aquatic habitat. Caltrans shall ensure that contamination of habitat does not occur during such

operations. Prior to the onset of work, the County shall ensure that a plan is in place for a prompt and effective response to accidental spills. All workers shall be informed of the importance of preventing spills and of the appropriate measures to take should a spill occur.

Mitigation Measure BIO-6 **Rock Slope Protection Installation.** During construction, the County or County contractor shall ensure that placement of rock slope protection (RSP), native topsoil from the channel shall be incorporated within the RSP to provide a seeding and planting medium. Areas of RSP above the ordinary high-water mark (OHWM) shall be revegetated with the seed mix specified in Table 4.B. In addition, locally obtained willow cuttings/poles shall be installed within the lower sections of the RSP near the OHWM.

Mitigation Measure BIO-7 **Live Channel Work Period.** Work in the live channel of Tres Pinos Creek (consisting of placement of RSP, a support pier, and falsework) shall be limited to the period of June 15 through October 15. If any work within the live channel of Tres Pinos Creek is not completed by October 15, the County or County contractor shall request a written approval/extension from the National Marine Fisheries Service (NMFS) to allow work past October 15. Revegetation activities are excluded from this requirement with the stipulation that no heavy equipment be used in the channel.

Mitigation Measure BIO-8 **South Central California Coast Steelhead.** During construction, the County or County contractor shall implement the following measures:

1. Prior to project implementation, a qualified biologist shall conduct a worker environmental awareness training for all construction personnel and monitoring biologists on the terms and conditions being implemented to protect SCCC steelhead during construction. The biological monitor shall have the full authority to halt work as necessary for the purpose of minimizing adverse effects on SCCC steelhead.

2. The work area for placement of the RSP, support pier, and falsework shall be dewatered prior to the start of work. Dewatering shall consist of installation of a flow diversion to separate the live channel from the area where in-stream work shall occur. The flow diversion shall consist of a corrugated metal pipe (CMP) sized to accommodate the flows expected during the diversion period. The CMP shall be placed along the low-flow invert of the natural creek and a small earthen berm shall be installed at each end of the pipe to direct water into the

pipe. Clean sand and gravel shall be used at the base of the berm to protect the existing creek channel. Both the berms and CMP shall be completely removed at the completion of project construction. A qualified biologist shall be on site during installation and removal of the flow diversion.

3. Prior to installation of the flow diversion, a qualified biologist shall determine the need for a temporary fish seine around the area to be isolated. If a seine is needed, the qualified biologist shall oversee the installation. A weighted fish seine shall be stretched across the length of the bank where work shall be conducted and shall extend a minimum of 3.3 ft beyond the upstream and downstream limits of the work. With the upstream and downstream ends of the seine remaining on the bank, the remainder of the seine shall be extended into the channel to approximately 3.3 ft beyond the limits of the area to be dewatered. The seine shall be temporarily staked into place in such a way that no fish may enter the isolated area. The purpose of this method is to direct the fish out of the area to be dewatered.

4. After the seine is in place, the qualified biologist shall visually survey the waters isolated behind the seine for the presence of any fish. If any fish are encountered within the isolated area, the fish seining process must be repeated until all fish are driven from the area to be isolated, as determined by the fisheries biologist. The qualified biologist shall capture any fish that remain in the areas to be dewatered. Electrofishing may be implemented to ensure that all of the fish are removed from the work area.

5. Once all of the fish have been removed from the work area, the flow diversion shall be installed in the isolated area. The qualified biologist shall be on site during installation and removal of the flow diversion.

6. All construction shall be conducted during daylight hours.

Mitigation Measure BIO-9

Environmentally Sensitive Area Fencing. Prior to construction activities, the qualified biologist shall identify locations for the placement of ESA fencing to protect sensitive habitat areas (i.e., jurisdictional areas, arroyo willow and mulefat riparian habitat, oak woodland habitat, the Tres Pinos Creek channel) adjacent to the construction area and to delineate a protection zone beyond which construction activities are prohibited. The construction contractor, with the assistance of the qualified biologist, shall install the ESA

fencing prior to construction activities. The qualified biologist shall verify the correct placement and installation of the ESA fences before work begins in the area.

Mitigation Measure BIO-10 **Protective Structure Use During Bridge Demolition.** During demolition of the existing bridge, the County or County contractor shall ensure that a heavy tarp, temporary decking, or equivalent structure be placed beneath the bridge to collect debris falling from the bridge and prevent it from entering Tres Pinos Creek. The tarp shall be left in place until the bridge is removed. This measure may also apply during construction of the new bridge deck. This measure only applies prior to stream diversion.

Significance Determination after Mitigation/Compliance: Less Than Significant with Mitigation Incorporated

b. Would the project have a substantial adverse effect on any riparian habitat or other sensitive natural community identified in local or regional plans, policies, regulations, or by the California Department of Fish and Game or U.S. Fish and Wildlife Service?

The BSA includes one formally designated natural community of special concern, arroyo willow series, and one sensitive natural community, riverine wetlands. Both communities are associated with Tres Pinos Creek; the riverine wetlands also extend southeast from the creek within the unnamed ephemeral tributary. Additionally, the mixed oak series within the BSA contains several native oak trees, which are considered sensitive under CEQA. Other natural communities on site with no formal designation include the mulefat series and riverine. Impacts to each habitat and natural community are discussed further below.

Arroyo Willow Series and Mulefat Series. The arroyo willow series is located along Tres Pinos Creek. Arroyo willow (*Salix lasiolepis*) and narrow-leaved willow (*Salix exigua*) are dominant and form a small thicket. This natural community totals 0.41 ac. The project would result in permanent impacts to 0.19 ac of arroyo willow series during installation of the new bridge. Temporary impacts, totaling 0.07 ac, would also occur as a result of cutting back of vegetation to provide access routes and disturbance from construction activities. The mulefat series is located along an unnamed ephemeral tributary originating from a stock pond south of the BSA. Mulefat (*Baccharis salicifolia*) dominates the overstory in this community, with California mugwort (*Artemesia douglasiana*) and rabbitsfoot grass (*Polypogon monspeliensis*) being the primary understory species. This natural community totals 0.15 ac. The project would result in permanent impacts to 0.03 ac of mulefat series during installation of RSP. Temporary impacts, totaling 0.02 ac, would also occur as a result of cutting back of vegetation to provide access routes and disturbance from construction activities. Implementation of **Mitigation Measures BIO-2, BIO-4, BIO-6, BIO-7, BIO-9 through BIO-13, HAZ-1, and Compliance Measure WQ-1** would require restoration of disturbed areas to preconstruction contours and revegetation of disturbed areas with the native seed mix specified in Table 4.B; management of invasive plant species; properly revegetating the areas where RSP would be installed; limiting the work period in the live channel of Tres Pinos Creek; placing brightly colored ESA fencing along the limits of work; use of a tarp or other protective structure during removal of the existing bridge;

locating staging areas, access routes, and construction areas outside of wetland and riparian areas to the maximum extent practicable; obtaining all required regulatory permits from the United States Army Corps of Engineers (ACOE), Regional Water Quality Control Board (RWQCB), and/or CDFW; compensation for the removal of arroyo willow and mulefat riparian vegetation at a 3:1 ratio by preserving, creating, and/or restoring the resource within the project site at a 3:1 ratio and/or purchasing credits at an approved mitigation bank at a minimum 1:1 ratio; preparation of a SWPPP implementation of construction BMPs; and preparation of an Emergency Response and Cleanup Plan. Implementation of **Mitigation Measures BIO-2, BIO-4, BIO-6, BIO-7, BIO-9 through BIO-13, HAZ-1, and Compliance Measure WQ-1** would reduce potential construction-related impacts on the arroyo willow series to a less than significant level.

Riverine and Riverine Wetlands. Riverine areas in the BSA are associated with concrete-lined, unvegetated open-water areas of Tres Pinos Creek and include areas underneath the existing bridge and the low-water crossing to the north. This natural community totals 0.05 ac. Permanent impacts to riverine, totaling 0.01 ac, would occur during installation of the new bridge. Temporary impacts, totaling 0.02 ac, would occur as a result of stream diversion and temporary construction access. Riverine wetlands in the BSA are associated with Tres Pinos Creek and the unnamed ephemeral tributary. The wetlands are dominated by a variety of hydrophytic vegetation, and this natural community totals 0.37 ac. Permanent impacts to riverine wetlands, totaling 0.09 ac, would occur during installation of the new bridge. Temporary impacts, totaling 0.12 ac, would occur as a result of stream diversion and temporary construction access. Removal of the existing bridge and subsequent revegetation of the area currently covered by the bridge shall restore approximately 0.02 ac of riverine wetland habitat.

Implementation of **Mitigation Measures BIO-2, BIO-4, BIO-6, BIO-7, BIO-9 through BIO-12, BIO-14, HAZ-1, and Compliance Measure WQ-1** would require restoration of disturbed areas to preconstruction contours and revegetation of disturbed areas with the native seed mix specified in Table 4.B; management of invasive plant species; properly revegetating the areas where RSP would be installed; properly revegetating the areas where RSP would be installed; restoration of disturbed areas to preconstruction contours and revegetation of disturbed areas with the native seed mix specified in Table 4.B; limiting the work period in the live channel of Tres Pinos Creek; placing brightly colored ESA fencing along the limits of work; use of a tarp or other protective structure during removal of the existing bridge; locating staging areas, access routes, and construction areas outside of wetland and riparian areas to the maximum extent practicable; obtaining all required regulatory permits from the United States Army Corps of Engineers (ACOE), Regional Water Quality Control Board (RWQCB), and/or CDFW; compensation for permanent impacts to riverine and riverine wetlands areas by purchasing credits at an approved mitigation bank at a minimum 1:1 ratio; preparation of a SWPPP and implementation of BMPs; and preparation of an Emergency Response and Cleanup Plan. Implementation of **Mitigation Measures BIO-2, BIO-4, BIO-6, BIO-7, BIO-9 through BIO-12, BIO-14, HAZ-1, and Compliance Measure WQ-1** would reduce potential construction-related impacts, both temporary and permanent, on riverine and riverine wetlands to a less than significant level.

Mixed Oak Series. The mixed oak series is located on the north-facing slope in the south-central portion of the BSA. This community consists of a mix of valley oak (*Quercus lobata*) and coast live

oak species (*Quercus agrifolia*). Other representative species include Alvord oak (*Quercus x alvordiana*), gray pine (*Pinus sabiniana*), California juniper (*Juniperus californica*), and an annual wildflower understory. This community totals 0.39 ac within the BSA. The project would result in the removal of 0.09 ac of mixed oak woodland vegetation, including two native oak trees (10 and 31 inches, respectively) along the south shoulder of Panoche Road as a result of construction of the realigned, new wider eastern bridge approach. Temporary impacts, totaling 0.08 ac, would also occur during temporary construction access.

Implementation of **Mitigation Measures BIO-2, BIO-4, BIO-9, BIO-11, and BIO-13** would require restoration of disturbed areas to preconstruction contours and revegetation of disturbed areas with the native seed mix specified in Table 4.B; managing invasive plant species; placing brightly colored ESA fencing along the limits of work; locating staging areas, access routes, and construction areas outside of oak woodland areas to the maximum extent practicable; and compensation for the removal of arroyo willow and mulefat riparian vegetation at a 3:1 ratio by preserving, creating, and/or restoring the resource within the project site at a 3:1 ratio and/or purchasing credits at an approved mitigation bank at a minimum 1:1 ratio. Implementation of **Mitigation Measures BIO-2, BIO-3, BIO-9, BIO-11, and BIO-13** would reduce potential construction-related impacts, both temporary and permanent in nature, on the mixed oak series to a less than significant level.

Overall, implementation of **Mitigation Measures BIO-2, BIO-4, BIO-6, BIO-7, and BIO-9 through BIO-14, HAZ-1, and Compliance Measure WQ-1** would reduce potential construction-related impacts on riparian habitats and other sensitive natural communities identified in local or regional plans, policies, or regulations, or by the CDFW or USFWS, to a less than significant level. Once constructed, the project would have no operational impacts.

Significance Determination: Potentially Significant Impact

Mitigation/Compliance Measures: In addition to the measures listed below, refer to **Mitigation Measures BIO-2, BIO-4, BIO-6, BIO-7, BIO-9, and BIO-10** in Section 4.4.a; **Mitigation Measure HAZ-1** in Section 4.9.a; and **Compliance Measure WQ-1** in Section 4.10.a.

Mitigation Measure BIO-11 **Staging, Access, and Construction Area Placement.** The County shall ensure that the contractor's staging areas, access routes, and construction areas are located outside of wetland, riparian, and oak woodland areas to the maximum extent practicable.

Mitigation Measure BIO-12 **Regulatory Permits.** Prior to issuance of a grading permit or other authorization to proceed with project construction, the County or County contractor shall obtain any regulatory permits that are required from the United States Army Corps of Engineers (ACOE), CDFW, and/or Regional Water Quality Control Board (RWQCB).

Mitigation Measure BIO-13 **Arroyo Willow Riparian Vegetation, Mulefat Riparian Vegetation, and Mixed Oak Vegetation Compensatory Mitigation.** Prior to construction, the County shall approve the compensatory habitat mitigation plan for arroyo willow riparian vegetation, mulefat

riparian vegetation, and mixed oak vegetation based on the requirements of the ACOE, CDFW, and RWQCB as specified in the approved regulatory permits. Mitigation shall be accomplished using one of the following methods, or by using a combination of the methods, contingent upon approval by the ACOE, CDFW, and RWQCB:

- Preservation, creation, and/or restoration of the impacted resources per permit requirements. This work would occur solely within the project impact area.
- Purchase of credits at an approved mitigation bank per permit requirements.

Mitigation Measure BIO-14 **Riverine and Riverine Wetlands Compensatory Mitigation.** Prior to construction, the County shall ensure that permanent impacts to riverine and riverine wetlands be mitigated using the following method, contingent upon approval by the ACOE, CDFW, and/or RWQCB:

- Purchase of credits at an approved mitigation bank at a minimum 1:1 mitigation ratio.

Significance Determination after Mitigation/Compliance: Less Than Significant with Mitigation Incorporated

c. Would the project have a substantial adverse effect on state or federally protected wetlands (including, but not limited to, marsh, vernal pool, coastal, etc.) through direct removal, filling, hydrological interruption, or other means?

Waters of the United States within the BSA are limited to Tres Pinos Creek and a small ephemeral tributary totaling 0.42 ac. Wetlands within the BSA, totaling 0.37 ac, are located along the length of Tres Pinos Creek (except under the existing bridge deck and the low-water crossing) and the central length of the ephemeral tributary. Nonwetland waters, totaling 0.05 ac, consist of all features within the OHWM that do not support wetlands.

The proposed project would result in both permanent and temporary impacts to waters of the United States. Permanent impact to wetlands, totaling 0.09 ac, would occur during realignment of a portion of the ephemeral drainage, placement of the concrete pier, and RSP. Temporary impacts to wetlands, totaling 0.12 ac, would occur during stream diversion activities. Permanent impacts to nonwetland waters, totaling 0.01 ac, would occur during realignment of a portion of the ephemeral drainage and placement of RSP. Temporary impacts, totaling 0.02 ac, would occur during stream diversion activities.

The project would result in minor permanent and temporary impacts to wetlands. The project has been designed to avoid impacts to wetlands, where feasible, including constructing two retaining

walls to minimize embankment fill from encroaching into the creek. There is no viable project alternative that completely avoids temporary and permanent impacts in wetlands. The mitigation measures listed below would minimize impacts to wetlands during and after construction.

Implementation of **Mitigation Measures BIO-2, BIO-4, BIO-6, BIO-7, BIO-9 through BIO-12, BIO-14, HAZ-1, and Compliance Measure WQ-1** would require restoration of disturbed areas to preconstruction contours and revegetation of disturbed areas with the native seed mix specified in Table 4.B; managing invasive plant species; properly revegetating the areas where RSP would be installed; limiting the work period in the live channel of Tres Pinos Creek; placing brightly colored ESA fencing along the limits of work; use of a tarp or other protective structure during removal of the existing bridge; locating staging areas, access routes, and construction areas outside of wetland and riparian areas to the maximum extent practicable; management of invasive plant species; obtaining all required regulatory permits from the ACOE, RWQCB, and/or CDFW; and compensation for permanent impacts to riverine and riverine wetlands areas by purchase of credits at an approved mitigation bank at a minimum 1:1 ratio; preparation of a SWPPP and implementation of BMPs; and preparation of an Emergency Response and Cleanup Plan. Implementation of **Mitigation Measures BIO-2, BIO-4, BIO-6, BIO-7, BIO-9 through BIO-12, BIO-14, HAZ-1, and Compliance Measure WQ-1** would reduce potential impacts, both temporary and permanent in nature, on wetlands to a less than significant level. Once constructed, the project would have no operational impacts.

Significance Determination: Potentially Significant Impact

Mitigation/Compliance Measures: Mitigation Measure BIO-2, BIO-4, BIO-6, BIO-7, BIO-9 through BIO-12, and BIO-14 in Section 4.4a and 4.4b above; **Mitigation Measure HAZ-1** in Section 4.9.a; and **Compliance Measure WQ-1** in Section 4.10.a.

Significance Determination after Mitigation/Compliance: Less Than Significant with Mitigation Incorporated

d. Would the project interfere substantially with the movement of any native resident or migratory fish or wildlife species or with established native resident or migratory wildlife corridors, or impede the use of native wildlife nursery sites?

Wildlife movement corridors are linear habitats that function to connect two or more areas of significant wildlife habitat. These corridors may function on a local level as links between small habitat patches (e.g., streams in urban settings) or may provide critical connections between regionally significant habitats (e.g., deer movement corridors). Wildlife corridors typically include vegetation and topography that facilitate the movements of wild animals from one area of suitable habitat to another in order to fulfill foraging, breeding, and territorial needs.

Tres Pinos Creek is tributary to the San Benito River approximately 15 mi downstream of the BSA. It is joined by numerous tributaries along this reach. Tres Pinos Creek within the BSA is near the upper end of the watershed and provides a link between the foothill habitats and the habitats in the Hollister Valley. Consequently, Tres Pinos Creek provides a potential movement corridor for smaller species of wildlife.

Implementation of **Mitigation Measures BIO-2 through BIO-12, HAZ-1, and Compliance Measure WQ-1** would require restoration of disturbed areas to preconstruction contours and revegetation of disturbed areas with the native seed mix specified in Table 4.B; pre-construction surveys by a qualified biologist prior to construction activities; management of invasive plant species; implementation of the provisions of the CRLF "Programmatic Biological Opinion for Projects Funded or Approved under the Federal Highway Administration's Federal Aid Program (8-8-10-F-58)", which would require restoration of temporary impact habitat contours to original configuration and revegetation of disturbed areas with a native seed mix to ensure temporary impact areas within CRLF habitat are restored to pre-project conditions; preconstruction surveys by a USFWS-approved qualified biologist prior to construction; proper relocation of any CRLF; worker awareness training of all construction personnel; managing and regularly removing all trash from the worksite; maintaining at least a 60 ft setback from riparian habitat for refueling, maintenance, and staging equipment; avoiding impounding water in a manner that may attract CRLF; removal of exotic species from the project area; properly revegetating the areas where RSP would be installed; limiting the work period in the live channel of Tres Pinos Creek; preconstruction surveys for SCCC steelhead by a qualified biologist prior to construction activities; adherence to in-water work windows; worker awareness training of all construction personnel; properly installing the flow diversion metal pipe; designation of ESAs; use of a tarp or other protective structure during removal of the existing bridge; locating staging areas, access routes, and construction areas outside of wetland and riparian areas to the maximum extent practicable; obtaining all required regulatory permits from the ACOE, RWQCB, and/or CDFW; preparation of a SWPPP and implementation of BMPs; and preparation of an Emergency Response and Cleanup Plan and implementation of BMPs.

Implementation of **Mitigation Measures BIO-2 through BIO-12, HAZ-1, and Compliance Measure WQ-1** would reduce potential construction-related impacts on wildlife movement to a less than significant level.

Construction of the proposed project would result in temporary effects to wildlife movement, but these effects would be temporary in that they would only occur during construction and would not result in a permanent barrier to aquatic or terrestrial animals. Once the proposed project is operational, land uses in the BSA would be the same as under existing conditions. Operation of the proposed project would have no permanent impacts to wildlife movement corridors.

Significance Determination: Potentially Significant Impact

Mitigation/Compliance Measures: Mitigation Measures BIO-2 through BIO-12 in Section 4.4a and 4.4b; **Mitigation Measure HAZ-1** in Section 4.9.a; and **Compliance Measure WQ-1** in Section 4.10.a.

Significance Determination after Mitigation/Compliance: Less Than Significant with Mitigation Incorporated

e. Would the project conflict with any local policies or ordinances protecting biological resources, such as a tree preservation policy or ordinance?

Woodlands within San Benito County are regulated by the County of San Benito Zoning Ordinance, Title 19, Chapter 19.33 – Management and Conservation of Woodlands. This policy is intended to

control the removal of protected woodlands, maintain and enhance tree cover, and protect woodland environments. A discretionary permit is required for the removal of woodlands per the canopy retention standard in Table 19.33.007(1) (please refer to San Benito Zoning Ordinance, Title 19).

Construction of the proposed project would result in the removal of 0.09 ac of mixed oak woodland vegetation, including two native oak trees (10 and 31 inches, respectively). Additionally, the project has been designed to avoid impacts to oak woodlands, where feasible, including the use of retaining walls and minimizing the amount of cut and fill required to install the new roadway bridge approaches. Based upon the above considerations, it is determined that there is no practicable alternative to the proposed construction in oak woodlands and that the proposed action includes all practicable measures to minimize harm to oak woodlands.

Project impacts do not meet the threshold for the above mentioned discretionary permit. Additionally, as detailed in **Mitigation Measure BIO-13,** the removal of mixed oak vegetation would be compensated at a 3:1 ratio through preservation, creation, and or/restoration of the impacted resource and/or purchase of credits at an approved mitigation bank. The proposed project would not conflict with any local policies or ordinances protecting biological resources. There would be a less than significant impact with mitigation incorporated.

Significance Determination: Potentially Significant Impact

Mitigation/Compliance Measures: Mitigation Measure BIO-13, as described in Section 4.4.b.

Significance Determination after Mitigation/Compliance: Less than Significant with Mitigation Incorporated

f. Would the project conflict with the provisions of an adopted Habitat Conservation Plan, Natural Community Conservation Plan, or other approved local, regional, or state habitat conservation plan?

The proposed project does not fall in an area with an adopted Habitat Conservation Plan (HCP), Natural Communities Conservation Plan (NCCP), or other approved local, regional, or State habitat conservation plan, and therefore would not present a conflict with any such plan. There would be no impact and no mitigation is required.

Significance Determination: No impact

Mitigation/Compliance Measures: No mitigation is required.

Significance Determination after Mitigation/Compliance: No Impact

4.5 CULTURAL RESOURCES

	Potentially Significant Impact	Less Than Significant with Mitigation Incorporated	Less Than Significant Impact	No Impact
Would the project:				
a. Cause a substantial adverse change in the significance of a historical resource pursuant to §15064.5?	☐	☐	☐	☒
b. Cause a substantial adverse change in the significance of an archaeological resource pursuant to §15064.5?	☐	☒	☐	☐
c. Disturb any human remains, including those interred outside of formal cemeteries?	☐	☒	☐	☐

The discussion and analysis in this section is based on the Supplemental Historic Property Survey Report (HPSR) (LSA, July 2021). The Supplemental HPSR is not available due to resource confidentiality. Refer to California Government Code Sections 6254.10 and 6254(r); California Code of Regulations Section 15120(d); and Section 304 of the National Historic Preservation Act of 1966). Preparation of the Supplemental HPSR included an archaeological presence/absence excavation (an Extended Phase I [XPI]). The project area for cultural resources is the Area of Potential Effects (APE), which is the area where ground-disturbing activities would occur, including access routes, staging, and work areas. The Area of Potential Effect (APE) evaluated in the Supplemental HPSR encompasses 3.66 ac. For the purposes of this IS/MND, the project site is the same as the APE.

a. Would the project cause a substantial adverse change in the significance of a historical resource pursuant to §15064.5; and

CEQA defines a "historical resource" as a resource that meets one or more of the following criteria: (1) listed in, or determined eligible for listing in, the California Register of Historical Resources (California Register); (2) listed in a local register of historical resources as defined in California Public Resources Code (PRC) Section 5020.1(k); (3) identified as significant in a historical resource survey meeting the requirements of PRC Section 5024.1(g); or (4) determined to be a historical resource by a project's Lead Agency (PRC Section 21084.1 and *State CEQA Guidelines* Section 15064.5(a)).

The Caltrans Historic Bridge Inventory lists the Panoche Road Bridge (#43C-0027) as a Category 5 bridge. Category 5 bridges are not eligible for inclusion in the National Register of Historical Places (National Register).

Record searches were conducted on August 26, 2011, and April 10, 2020, at the Northwest Information Center of the California Historical Resources Information System and did not identify any previously recorded cultural resources within the project site or the 0.5 mi search radius. Field surveys conducted on November 2, 2011, April 2, 2011, and July 10, 2012, did not identify any archaeological artifacts or sites. An updated intensive pedestrian survey of the project site conducted on April 2, 2020, resulted in the identification of one precontact-period bedrock milling station archaeological site (LSA-PRB-001) and two isolated artifacts (PRB-ISO-001, a cryptocrystalline core, and PRB-ISO-002, a hopper mortar). The proposed project has been designed to avoid the bedrock milling feature (LSA-PRB-001); this feature would not be affected by the proposed project.

As isolated artifacts with no informational potential, no special or particular qualities, and no direct association with scientifically recognized prehistoric or historic events or persons, archaeological resources PRB-ISO-001 and PRB-ISO-002 do not qualify as historical or unique archaeological resources. Per PRC Section 21083.2(h), non-unique archaeological resources warrant no additional consideration under CEQA other than recording of the resource, which has been conducted. As such, no historical resources were identified within the project site by the work conducted as part of the HPSR preparation. There are no known historical resources as defined in Section 15064.5 of the *State CEQA Guidelines* located within the project site. The project would not cause a substantial adverse change in the significance of a historical resource, and no mitigation is required.

Significance Determination: No Impact

Mitigation/Compliance Measures: No mitigation is required.

Significance Determination after Mitigation/Compliance: No Impact

b. Would the project cause a substantial adverse change in the significance of an archaeological resource pursuant to §15064.5?

As discussed above, the proposed project has been designed to avoid bedrock milling feature LSA-PRB-001, and this archaeological resource would not be affected by the proposed project. As isolated artifacts with no informational potential, no special or particular qualities, and no direct association with scientifically recognized prehistoric or historic events or persons, archaeological resources PRB-ISO-001 and PRB-ISO-002 do not qualify as historical or unique archaeological resources. Per PRC Section 21083.2(h), non-unique archaeological resources warrant no additional consideration under CEQA other than recording of the resource, which has been conducted.

There are no known significant archaeological resources within the project site. While the project site is located on a landform associated with high sensitivity for buried archaeological deposits, historic-period settlement, bridge installation, road infrastructure, and grazing activities have likely diminished this sensitivity due to associated ground disturbance. Nevertheless, to ensure that historical and archaeological resources as defined by *State CEQA Guidelines* §15064.5 are not impacted by project implementation, **Mitigation Measure CUL-1,** provided below, would be implemented. With implementation of **Mitigation Measure CUL-1,** the proposed project would ensure that impacts related to a historical or archaeological resource pursuant to §15064.5 would be less than significant with mitigation incorporated.

Significance Determination: Potentially Significant Impact

Mitigation/Compliance Measures:

Mitigation Measure CUL-1 **Prehistoric or Historic Archaeological Discovery Protocols.** If deposits of prehistoric or historical archaeological materials are discovered during nonmonitored project activities, all work within 25 feet of the discovery shall be redirected and a qualified archaeologist contacted, if one is not present, to assess the

situation, consult with the agencies as appropriate, and make recommendations for the treatment of the discovery. The Director of Planning at the San Benito County Building and Planning Department shall also be notified. Project personnel shall not collect or move any archaeological materials.

Any adverse impacts to the finds shall be avoided by project activities. If avoidance is not feasible, the archaeological deposits shall be evaluated to determine if they qualify as a historical resource or unique archaeological resource, or as historic property. If the deposits do not so qualify, avoidance is not necessary. If the deposits do so qualify, adverse impacts on the deposits shall be avoided, or such impacts shall be mitigated. Mitigation may consist of, but is not limited to, recovery and analysis of the archaeological deposit; recording the resource; preparing a report of findings; and accessioning recovered archaeological materials at an appropriate curation facility. Educational public outreach may also be appropriate. Upon completion of the assessment, the archaeologist shall prepare a report documenting the methods and results and provide recommendations for the treatment of the archaeological deposits discovered. The report shall be submitted to the County of San Benito for approval.

Significance Determination after Mitigation/Compliance: Less Than Significant with Mitigation Incorporated

c. Would the project disturb any humans remains, including those interred outside of formal cemeteries?

No known human remains are present within the project site, and there is no evidence to support the idea that Native Americans or people of European descent are buried in the project site. However, undiscovered human remains may be present below the ground surface on any property. In the unlikely event that human remains are encountered during construction activities, the proper authorities would be notified, and standard procedures for the respectful handling of human remains during the earthmoving activities would be implemented, as specified by **Compliance Measure CUL-2**. Therefore, compliance with **Compliance Measure CUL-2** would reduce the potential for impacts on unknown buried human remains to a less than significant level.

Significance Determination: Potentially Significant Impact

Mitigation/Compliance Measures:

Compliance Measure CUL-2 **Discovery of Human Remains.** In the event that human remains are encountered on the project site, work within 50 feet of the discovery shall be redirected and the San Benito County Coroner notified immediately, consistent with the requirements of California

Code of Regulations (CCR) Section 15064.5(e). State Health and Safety Code Section 7050.5 states that no further disturbance shall occur until the County Coroner has made a determination of origin and disposition pursuant to Public Resources Code (PRC) Section 5097.98. If the remains are determined to be Native American, the County Coroner shall notify the Native American Heritage Commission (NAHC) within 24 hours, which shall determine and notify a Most Likely Descendant (MLD). With the permission of the property owner, the MLD may inspect the site of the discovery. The MLD shall complete the inspection within 48 hours of being granted access to the project site. The MLD may recommend scientific removal and nondestructive analysis of human remains and items associated with Native American burials.

Significance Determination after Mitigation/Compliance: Less Than Significant with Mitigation Incorporated

4.6 ENERGY

	Potentially Significant Impact	Less Than Significant with Mitigation Incorporated	Less Than Significant Impact	No Impact
Would the project:				
a. Result in a potentially significant environmental impact due to wasteful, inefficient, or unnecessary consumption of energy resources during project construction or operation?	☐	☐	☒	☐
b. Conflict with or obstruct a state or local plan for renewable energy or energy efficiency?	☐	☐	☒	☐

a. Would the project result in a potentially significant environmental impact due to wasteful, inefficient, or unnecessary consumption of energy resources during project construction or operation?

This analysis evaluates energy consumption for both construction and operation of the proposed project, including diesel fuel use for off-road construction equipment.

Construction. Construction of the proposed project would require the use of energy to fuel grading vehicles, trucks, and other construction vehicles. All or most of this energy would be derived from nonrenewable resources. However, construction activities are not anticipated to result in an inefficient use of energy, as gasoline and diesel fuel would be supplied by construction contractors, which would conserve the use of their supplies to minimize their costs on the project. Energy usage on the project site during construction would be temporary in nature and would be relatively small in comparison to the State's available energy sources. Therefore, construction energy impacts would be less than significant, and no mitigation would be required.

Operation. Typically, energy consumption is associated with fuel used for vehicle trips and electricity and natural gas use. However, the proposed project would replace the existing two-lane bridge by constructing a wider bridge that meets current County, Caltrans, and AASHTO requirements. The project would not generate additional vehicle trips through the project area and, therefore, would not increase fuel usage. Operation of the proposed project would not require the consumption of natural gas or energy. Therefore, implementation of the proposed project would not result in a long-term demand for electricity and natural gas, nor would the project require new service connections or construction of new off-site service lines or substations to serve the project. The nature of proposed improvements would not require substantial amounts of energy for either construction or maintenance purposes. Therefore, the proposed project would not use nonrenewable resources in a wasteful or inefficient manner. Thus, operational energy impacts would be less than significant, and no mitigation would be required.

Significance Determination: Less Than Significant Impact

Mitigation/Compliance Measures: No mitigation is required.

Significance Determination after Mitigation/Compliance: Less Than Significant Impact

b. Conflict with or obstruct a state or local plan for renewable energy or energy efficiency?

In 2002, the State Legislature passed Senate Bill (SB) 1389, which required the California Energy Commission (CEC) to develop an integrated energy plan every 2 years for electricity, natural gas, and transportation fuels for the California Energy Policy Report. The plan calls for the State to assist in the transformation of its transportation system to improve air quality, reduce congestion, and increase the efficient use of fuel supplies with the least environmental and energy costs. The most recently adopted reports include the *2021 Integrated Energy Policy Report* (CEC 2021) and the *2022 Integrated Energy Policy Report Update* (CEC 2022). The CEC's *2021 Integrated Energy Policy Report* and *2022 Integrated Energy Policy Report Update* provide the results of its assessments of a variety of energy issues facing California.

As indicated above, energy usage in the project area during construction would be relatively small in comparison to the State's available energy sources, and energy impacts would be negligible at the regional level. Once operational, the proposed project would not increase energy use. Because California's energy conservation planning actions are conducted at a regional level, and because the project's total impact to regional energy supplies would be minor, the proposed project would not conflict with or obstruct California's energy conservation plans as described in the CEC's *2021 Integrated Energy Policy Report* and *2022 Integrated Energy Policy Report Update*. Therefore, the proposed project would not conflict with a State or local plan for renewable energy or energy efficiency, and potential impacts would be less than significant. No mitigation is required.

Significance Determination: Less Than Significant Impact

Mitigation/Compliance Measures: No mitigation is required.

Significance Determination after Mitigation/Compliance: Less Than Significant Impact

4.7 GEOLOGY AND SOILS

	Potentially Significant Impact	Less Than Significant with Mitigation Incorporated	Less Than Significant Impact	No Impact
Would the project:				
a. Directly or indirectly cause potential substantial adverse effects, including the risk of loss, injury, or death involving:				
i. Rupture of a known earthquake fault, as delineated on the most recent Alquist-Priolo Earthquake Fault Zoning Map issued by the State Geologist for the area or based on other substantial evidence of a known fault? Refer to Division of Mines and Geology Special Publication 42.	☐	☐	☒	☐
ii. Strong seismic ground shaking?	☐	☒	☐	☐
iii. Seismic-related ground failure, including liquefaction?	☐	☐	☒	☐
iv. Landslides?	☐	☐	☒	☐
b. Result in substantial soil erosion or the loss of topsoil?	☐	☐	☒	☐
c. Be located on a geologic unit or soil that is unstable, or that would become unstable as a result of the project, and potentially result in on- or off-site landslide, lateral spreading, subsidence, liquefaction or collapse?	☐	☐	☒	☐
d. Be located on expansive soil, as defined in Table 18-1-B of the Uniform Building Code (1994), creating substantial direct or indirect risks to life or property?	☐	☐	☒	☐
e. Have soils incapable of adequately supporting the use of septic tanks or alternative waste water disposal systems where sewers are not available for the disposal of waste water?	☐	☐	☐	☒
f. Directly or indirectly destroy a unique paleontological resource or site or unique geologic feature?	☐	☒	☐	☐

The analysis in this section is based on the *Geotechnical Investigation Report* (Quincy Engineering, Inc. 2013) unless otherwise noted (refer to Appendix D). The purpose of the *geotechnical investigation* was to evaluate the general subsurface conditions at the project site, evaluate engineering properties, and provide foundation design recommendations for replacing the existing Panoche Road Bridge. The scope of work performed for this investigation included a review of the readily available geologic literature pertaining to the site, obtaining representative soil and rock samples and logging materials encountered in the exploratory borings, laboratory testing of the collected samples, engineering analysis of the field and laboratory data, and preparation of the *Geotechnical Investigation Report*.

Two exploratory borings, Borings BH-1 and BH-2, were drilled at the planned location of the west abutment and east abutment, respectively. These two deep borings were advanced primarily by rotary wash drilling method with the use of diamond core for retrieving rock samples to a maximum depth of 50.5 ft below the existing ground surface. Another two shallow borings, Boring R-1 (located about 60 ft northwest of the proposed western abutment) and Boring R-2 (located about 200 ft southeast of the proposed eastern abutment), were drilled to about 5 ft below existing grade for pavement design. Laboratory tests were performed on selected samples to evaluate the physical and engineering properties of the soils and rocks. The tests performed for the study include the

following: Laboratory Determination of Moisture Content (California Test Method 226), Unit Weight (California Test Method 212), Grain Size Analysis (California Test Method 202), Corrosion Test (California Test Method 643), R-value Test (California Test Method 301), and Unconfined Compressive Strength and Young's Modulus of Rock Core (ASTM D 7012). The boring data indicated shallow bedrock at the project site below an approximately 5 ft thick layer of sand and gravel. Below the surficial materials, the borings encountered Schist (approximately 5 ft thick in Boring BH-1 and 8.5 ft in Boring BH-2) overlying Graywacke to the maximum depth explored.

At the proposed location of the new bridge, groundwater is expected to be relatively deep and would not be encountered during construction. However, localized perched water may be expected between the soil and rock interface and seepage through rock fractures could be expected. It is anticipated that perched water would vary with the passage of time due to seasonal runoff, surface and subsurface flow, the water level in the creek, and other factors that were not evident at the time of the geotechnical investigation.

a. Would the project directly or indirectly cause potential substantial adverse effects, including the risk of loss, injury, or death involving:

i. Rupture of a known earthquake fault, as delineated on the most recent Alquist-Priolo Earthquake Fault Zoning Map issued by the State Geologist for the area or based on other substantial evidence of a known fault? Refer to Division of Mines and Geology Special Publication 42.

Active geologic features in San Benito County include the San Andreas, Calaveras, Sargent, Paicines, Bear Valley, Zayante Vergeles, and Quien Sabe faults (County of San Benito 2015a). Several fault systems are located about 6 to 8 mi west of the project site. The nearest Alquist-Priolo Earthquake Fault Zone is the San Andreas fault, located approximately 8.2 mi west of the project site. The Pine Rock fault and Calaveras fault are approximately 7.1 mi and 6.6 mi from the project site, respectively. Since no active faults pass through the site, the potential for fault rupture is relatively low. Impacts would be less than significant, and no mitigation is required.

Significance Determination: Less Than Significant Impact

Mitigation/Compliance Measures: No mitigation is required.

Significance Determination after Mitigation/Compliance: Less Than Significant Impact

ii. Strong seismic ground shaking?

The California Geologic Survey Probabilistic Seismic Hazard Assessment (PHSA) calculates earthquake shaking hazards through historic seismic activity and fault slope rates. Four PHSA-identified faults are present within San Benito County, including the San Andreas; Calaveras, Zayante-Vergeles, and Quien-Sabe faults. Shaking from these faults is expressed as the peak ground acceleration (PGA) measured as a percentage (or fraction) of acceleration due to gravity (%g) from ground motion that has a 10 percent probability of being exceeded in 50 years. The project site is in an area of San Benito County with a PGA of 30 to 40 percent (County of San Benito 2015a).

The possibility of the project site to experience strong ground shaking is considered moderate to high. However, the proposed project would be designed in accordance with Caltrans seismic design criteria, which would include seismic attenuation features to ensure the integrity of the proposed structures remains intact during an earthquake. Therefore, the proposed project would be adequate to withstand the impacts of strong seismic ground shaking (i.e., the bridge would not collapse during a seismic event) and would not expose people or structures to adverse effects. **Mitigation Measure GEO-1**, which requires the preparation of a Final Geotechnical Report, would be required during final design and prior to the start of construction. **Mitigation Measure GEO-1** stipulates that the Final Geotechnical Report shall include appropriate seismic design provisions to be implemented as part of the final project design to address the impacts of strong seismic ground shaking on the proposed project. With implementation of **Mitigation Measure GEO-1**, potential project impacts associated with seismic ground shaking would be reduced to a less than significant level.

Significance Determination: Potentially Significant Impact

Mitigation/Compliance Measures:

Mitigation Measure GEO-1 **Final Geotechnical Report.** During final design, a detailed geotechnical investigation shall be conducted by qualified geotechnical personnel to assess the geotechnical conditions at the project site. The geotechnical investigation shall include drilled borings and/or cone penetration tests to confirm and extend site-specific subsurface site conditions for final design. The project-specific findings and recommendations of the geotechnical investigation shall be incorporated into the final design of the proposed project and shall be summarized in the Final Geotechnical Report to be submitted to the County of San Benito for review and approval.

Significance Determination after Mitigation/Compliance: Less than Significant with Mitigation Incorporated

iii. Seismic-related ground failure, including liquefaction?

Liquefaction is a phenomenon in which saturated cohesionless soils are subject to a temporary but essentially total loss of shear strength under the reversing, cyclic shear stresses associated with earthquake shaking. Submerged cohesionless sands and silts of low relative density are the type of soils that are usually susceptible to liquefaction. The possibility of liquefaction occurring at the project site is dependent upon (a) the occurrence of a significant earthquake in the vicinity; (b) sufficient groundwater to cause high pore pressures; and (c) the grain size, plasticity relative density, and confining pressures of the soils at the project site.

According to the geologic investigation, based on the boring data and the published geologic map, the liquefaction potential at the project site was deemed relatively low and liquefaction was not considered for foundation design. Impacts would be less than significant, and no mitigation is required.

Significance Determination: Less than Significant Impact

Mitigation/Compliance Measures: No mitigation is required.

Significance Determination after Mitigation/Compliance: Less than Significant Impact

iv. Landslides?

Slope instability (landslides and rockfalls) can result in the movement of material down a slope or gradient. Areas at risk from landslides within San Benito County are expected to be concentrated along active faults and steep topographical slopes with weak soil and rock. The project site is surrounded to the northwest, north, south, and southwest by steep hillsides. According to the geologic investigation, a large landslide was identified about 800 ft west of the project site, but given the distance to the project site, landslides would not pose an impact to the proposed project. The potential for seismically induced landslides to occur at the project area would be the same as in the existing condition. There is no potential for the proposed project to expose people or structures to impacts related to landslides. Impacts would be less than significant, and no mitigation is required.

Significance Determination: Less than Significant Impact

Mitigation/Compliance Measures: No mitigation is required.

Significance Determination after Mitigation/Compliance: Less than Significant Impact

b. Would the project result in substantial soil erosion or the loss of topsoil?

During construction activities, soil would be exposed during grading and excavation activities, and there would be an increased potential for soil erosion compared to existing conditions. Additionally, during a storm event, soil erosion could occur at an accelerated rate. The increased erosion potential could result in short-term water quality impacts as identified in Section 4.10, Hydrology and Water Quality. As required by the State Water Resources Control Board (SWRCB) National Pollutant Discharge Elimination System (NPDES) Construction General Permit, and as prescribed in **Compliance Measure WQ-1**, a SWPPP would be prepared that would specify construction BMPs to be implemented during construction activities. Construction BMPs would include Erosion Control BMPs designed to minimize erosion. With implementation of **Compliance Measure WQ-1,** substantial soil erosion or loss of topsoil during construction would be reduced to a less than significant level.

Implementation of the proposed project would result in an increase in impervious surface area at the project site by approximately 8,426 square feet. The operation of the proposed project would result in increases in surface runoff and runoff velocity, which would increase the likelihood of soil erosion. However, implementation of **Compliance Measure WQ-2,** requiring compliance with post-construction Construction General Permit requirements that require postconstruction runoff to match preconstruction runoff for the 85th percentile storm event, would reduce the likelihood of

erosion or loss of topsoil during project operations. With implementation of **Compliance Measure WQ-2,** substantial soil erosion or loss of topsoil would be reduced to a less than significant level.

A retaining wall would be constructed at the cut at the hillside near the southern abutment and RSP would be installed on both sides of the creek banks to protect the abutment from hydraulic scour. These measures would prevent erosion of the creek banks during the operational period of the project after construction is complete.

Overall, no mitigation is required. However, **Compliance Measures WQ-1 and WQ-2,** provided in Section 4.10, Hydrology and Water Quality, are standard conditions based on local, State, and federal regulations or laws that serve to reduce impacts associated with soil erosion. These compliance measures are applicable to the proposed project and shall be incorporated to ensure that the proposed project has minimal impacts associated with soil erosion.

Significance Determination: Less than Significant Impact

Mitigation/Compliance Measures: Please refer to **Compliance Measures WQ-1, and WQ-2** in Section 4.10.a.

Significance Determination after Mitigation/Compliance: Less than Significant Impact

c. Would the project be located on a geologic unit or soil that is unstable, or that would become unstable as a result of the project, and potentially result in on- or off-site landslide, lateral spreading, subsidence, liquefaction or collapse?

As described in the geotechnical investigation, the exploratory borings indicated bedrock at shallow depths below a 5 ft thick layer of sand and gravel. The proposed location of the new bridge is underlain by Franciscan Assemblage, which is submetamorphosed from eugeosynclinal marine clastic sedimentary and minor mafic igneous rock. The proposed bridge location is underlain by Glaucophane blueschist (gl) and Graywacke sandstone (fs). Blueschist was observed from the existing slope along Tres Pinos Creek during the geotechnical investigation site visit. Glaucophane blueschist (gl) is characterized as massive, coherent, and metamorphosed from ultramafic igneous rocks. Graywacke sandstone (fs) is characterized as massive to bedded, hard, fine-grained, including interbeds of gray claystone-siltstone, and somewhat shattered and sheared.

Subsidence or Collapse. Subsidence or collapse can result from the removal of subsurface water resulting in either catastrophic or gradual depression of the surface elevation of a project site. As discussed above, groundwater is expected to be relatively deep at the proposed bridge location. However, localized perched water may be expected between the soil and rock interface and seepage through rock fractures could be expected. In addition, it is anticipated that perched water would vary with the passage of time due to seasonal runoff, groundwater fluctuations, surface and subsurface flow, water level in the creek, and other factors that were not evident at the time of the geotechnical investigation. Additionally, land subsidence generally does not occur in response to declines in shallow groundwater (East Bay Municipal Utility District GSA and City of Hayward GSA 2021); therefore, potential impacts related to subsidence or soil collapse would be less than significant.

Liquefaction or Lateral Spreading. As discussed above, the geotechnical investigation concluded that the liquefaction potential at the proposed bridge location is relatively low. Additionally, groundwater was not encountered in the exploratory borings at the time of drilling. Therefore, potential impacts related to liquefaction or lateral spreading would be less than significant.

Landslide. As discussed above, a large landslide was identified about 800 ft west of the project site. However, the potential for landslides to occur in the project area would be the same as in the existing condition. Therefore, potential impacts related to landslides would be less than significant.Overall, the proposed project is not located on a geologic unit or soil that is unstable, or that would become unstable as a result of the project, and potentially result in on- or off-site landslide, lateral spreading, subsidence, liquefaction, or collapse. Impacts would be less than significant, and no mitigation is required.

Significance Determination: Less than Significant Impact

Mitigation/Compliance Measures: No mitigation is required.

Significance Determination after Mitigation/Compliance: Less than Significant Impact

d. Would the project be located on expansive soil, as defined in Table 18-1-B of the Uniform Building Code (1994), creating substantial direct or indirect risks to life or property?

Expansive soils are characterized by the potential for shrinking and swelling as the moisture content of the soil decreases and increases, respectively. Shrink-swell potential is influenced by the amount and type of clay minerals present and can be measured by the percent change of the soil volume. Expansive soils generally have a substantial amount of clay particles, which can give up water (shrink) or absorb water (swell). The change in the soil volume can cause structures to move unevenly and crack. The extent or range of the shrink/swell is influenced by the amount and kind of clay present in the soil. Expansive soils can be widely dispersed, and they can occur in hillside areas as well as low-lying alluvial basins.

Soil types located within the project area include the following:

- **Vallecitos Rocky Loam, 30 to 50 Percent Slopes, Eroded:** The Vallecitos series consists of shallow, well-drained soils formed in material weathered from metamorphosed sandstone and shale dominantly of the Franciscan Formation. Vallecitos soils are on hills and have slopes of 9 to 75 percent. These soils have medium to very rapid runoff and slow permeability and are mainly used for livestock grazing. Vegetation consists primarily of annual grasses, forbs and scattered oak, sagebrush, chamise, and Digger pine (USDA 2001).

- **Sorrento Silt Loam, 2 to 9 Percent Slopes:** The Sorrento series consists of very deep, well-drained soils that formed in medium-textured alluvium, mostly from sedimentary formations. Sorrento soils are on alluvial fans and stabilized floodplains and have slopes of 0 to 15 percent. These soils have negligible to medium runoff and moderate to moderately slow permeability, depending upon the dominant texture and amount of stratification in the lower part of the profile. These soils are used mainly for growing irrigated fruit, nut, field, forage, and truck crops,

as well as some dry grain. Uncultivated areas are mostly annual grasses and forbs with sycamore along drainage ways (USDA 1999).

According to United States Department of Agriculture (USDA) Natural Resources Conservation Service (NRCS) Web Soil Survey, Vallecitos rocky loam has a plasticity index of 16 percent and a liquid limit of 36 percent. Sorrento silt loam has a plasticity index of 15 percent and a liquid limit of 38 percent. According to a Federal Highway Administration (FHWA) study titled *An Evaluation of Expedient Methodology for Identification of Potentially Expansive Soils* (FHWA 1977), soils with a liquid limit percentage less than 50 and a plasticity index less than 25 have a low potential swell classification. Therefore, both soil types would have low swelling based off their plasticity index and liquid limit values. Therefore, impacts associated with expansive soils would be less than significant and no mitigation is required.

Significance Determination: Less than Significant Impact

Mitigation/Compliance Measures: No mitigation is required.

Significance Determination after Mitigation/Compliance: Less than Significant Impact

e. Would the project have soils incapable of adequately supporting the use of septic tanks or alternative waste water disposal systems where sewers are not available for the disposal of waste water?

The proposed project involves a bridge replacement and nearby roadwork. The project is transportation-related, and no septic or alternative waste treatment systems would be required during construction or operation of the proposed project. Portable toilets would be maintained on site throughout the construction period and would be serviced regularly by a service provider. The proposed project would not result in temporary or permanent impacts associated with soils incapable of adequately supporting the use of septic tanks or alternative wastewater disposal systems. No impact would occur, and no mitigation is required.

Significance Determination: No Impact

Mitigation/Compliance Measures: No mitigation is required.

Significance Determination after Mitigation/Compliance: No Impact

f. Directly or indirectly destroy a unique paleontological resource or site or unique geologic feature?

Paleontological resources include fossilized remains or traces of mammals, plants, and invertebrates, as well as their imprints. Such fossil remains, as well as the geological formations that contain them, are also considered a paleontological resource. Together, they represent a limited, nonrenewable scientific and educational resource. No paleontological resources are currently known to exist on the project site; however, the proposed project would require excavation of approximately 3,500 cy of soil to a maximum depth of approximately 22 ft below the ground

surface. Ground-disturbing activities could adversely impact previously unidentified fossils. Implementation of **Mitigation Measure GEO-2** would require excavation to halt within 50 ft of any discovered paleontological resources and examination of any paleontological find by a qualified paleontologist to determine its significance. Implementation of **Mitigation Measure GEO-2** would reduce impacts on paleontological resources to less than significant levels.

Significance Determination: Potentially Significant Impact

Mitigation/Compliance Measures:

Mitigation Measure GEO-2 **Paleontological Resources.** In the event of an unanticipated discovery of a paleontological resource during construction, excavations within 50 feet of the find shall be temporarily halted or diverted until the discovery is examined by a qualified paleontologist (per Society of Vertebrate Paleontology standards [SVP 1995,1996]). The qualified paleontologist shall document the discovery as needed, evaluate the potential resource, and assess the significance of the find. The paleontologist shall notify the appropriate agencies to determine procedures that would be followed before construction is allowed to resume at the location of the find. If the County of San Benito (County) determines that avoidance is not feasible, the paleontologist shall prepare an excavation plan for mitigating the effect of the project on the qualities that make the resource important, and such plan shall be implemented. The plan shall be submitted to the County for review and approval.

Significance Determination after Mitigation/Compliance: Less Than Significant with Mitigation Incorporated

4.8 GREENHOUSE GAS EMISSIONS

	Potentially Significant Impact	Less Than Significant with Mitigation Incorporated	Less Than Significant Impact	No Impact
Would the project:				
a. Generate greenhouse gas emissions, either directly or indirectly, that may have a significant impact on the environment?	☐	☐	☒	☐
b. Conflict with an applicable plan, policy or regulation adopted for the purpose of reducing the emissions of greenhouse gases?	☐	☐	☒	☐

a. Would the project generate greenhouse gas emissions, either directly or indirectly, that may have a significant impact on the environment?

Greenhouse gas emissions (GHGs) are present in the atmosphere naturally and are released by natural sources or are formed from secondary reactions taking place in the atmosphere. However, over the last 200 years, human activities have caused substantial quantities of GHGs to be released into the atmosphere. These extra emissions are increasing GHG concentrations in the atmosphere and enhancing the natural greenhouse effect, which is believed to be causing global climate change. The gases that are widely seen as the principal contributors to human-induced global climate change are:

- Carbon dioxide (CO_2)
- Methane (CH_4)
- Nitrous oxide (N_2O)
- Hydrofluorocarbons (HFCs)
- Perfluorocarbons (PFCs)
- Sulfur hexafluoride (SF_6)

Certain gases, such as water vapor, are short-lived in the atmosphere. Others remain in the atmosphere for significant periods of time, contributing to climate change in the long term. Water vapor is excluded from the list of GHGs above because it is short-lived in the atmosphere and its atmospheric concentrations are largely determined by natural processes, such as oceanic evaporation.

These gases vary considerably in terms of Global Warming Potential (GWP), which is a concept developed to compare the ability of each GHG to trap heat in the atmosphere relative to another gas. GWP is based on several factors, including the relative effectiveness of a gas in absorbing infrared radiation and the length of time that the gas remains in the atmosphere ("atmospheric lifetime").

The GWP of each gas is measured relative to CO_2, the most abundant GHG; the definition of GWP for a particular GHG is the ratio of heat trapped by one unit mass of the GHG to the ratio of heat

trapped by one unit mass of CO_2 over a specified time period. GHG emissions are typically measured in terms of pounds or tons of "CO_2 equivalents" (CO_2e).

Construction Greenhouse Gas Emissions. Construction activities, such as site preparation, site grading, on-site heavy-duty construction vehicles, equipment hauling materials to and from the site, and motor vehicles transporting the construction crew, would produce combustion emissions from various sources. During construction of the proposed project, GHGs would be emitted through the operation of construction equipment and from worker and builder supply vendor vehicles, each of which typically uses fossil-based fuels to operate. The combustion of fossil-based fuels creates GHGs such as CO_2, CH_4, and N_2O. Furthermore, CH_4 is emitted during the fueling of heavy equipment. Exhaust emissions from on-site construction activities would vary daily as construction activity levels change.According to the results of the RoadMod analysis, the project would generate 1,323.19 metric tons (MT) CO_2e construction emissions. The MBARD does not provide guidance for analyzing GHG emissions during construction. Amortizing the project emissions over 50 years (the expected lifespan of the project) would result in GHG emissions of approximately 26.4 MT CO_2e per year. Therefore, based on the minimal emissions that would be generated by construction of the project, the proposed project would not generate GHG emissions that would have a significant impact on the environment, and construction-related impacts would be less than significant. No mitigation is required.

Operational Greenhouse Gas Emissions. Long-term GHG emissions are typically generated from mobile and area sources as well as indirect emissions from sources associated with energy consumption. Mobile-source GHG emissions typically would include project-generated vehicle trips to and from a project site. Area-source emissions would be associated with activities such as landscaping and maintenance on the project site. Energy-source emissions are typically generated at off-site utility providers as a result of increased electricity demand generated by a project. In addition, water-source emissions associated with the proposed project are generated by water supply and conveyance, water treatment, and water distribution. The proposed project would replace the existing two-lane bridge by constructing a wider and taller bridge that meets current County, Caltrans, and AASHTO requirements. The project would not generate additional vehicle trips through the project area and, therefore, would not increase mobile-source emissions. The project would result in low levels of off-site emissions due to energy generation associated with lighting along the project segment. However, these emissions would be minimal. Operation of the proposed project would not generate GHG emissions that would have a significant impact on the environment, and operational impacts would be less than significant. No mitigation is required.

Significance Determination: Less Than Significant Impact

Mitigation/Compliance Measures: No mitigation is required.

Significance Determination after Mitigation/Compliance: Less Than Significant Impact

b. Would the project conflict with an applicable plan, policy or regulation adopted for the purpose of reducing the emissions of greenhouse gases?

San Benito County does not have an adopted climate action plan; however, the State has established GHG reduction goals under Assembly Bill (AB) 32, SB 32, and Executive Order (EO) S-3-05. As discussed in Response 4.8.a, the proposed project's short-term construction and long-term operational GHG emissions would be minimal and would not have a significant impact on the environment. Since the proposed project's GHG emissions would be minimal, the proposed project would not result in emissions that would conflict with any applicable plan, policy, or regulation adopted for the purpose of reducing GHG emissions, and a less than significant impact would occur. No mitigation is required.

Significance Determination: Less Than Significant Impact

Mitigation/Compliance Measures: No mitigation is required.

Significance Determination after Mitigation/Compliance: Less Than Significant Impact

4.9 HAZARDS AND HAZARDOUS MATERIALS

	Potentially Significant Impact	Less Than Significant with Mitigation Incorporated	Less Than Significant Impact	No Impact
Would the project:				
a. Create a significant hazard to the public or the environment through the routine transport, use, or disposal of hazardous materials?	☐	☒	☐	☐
b. Create a significant hazard to the public or the environment through reasonably foreseeable upset and accident conditions involving the release of hazardous materials into the environment?	☐	☒	☐	☐
c. Emit hazardous emissions or handle hazardous or acutely hazardous materials, substances, or waste within one-quarter mile of an existing or proposed school?	☐	☐	☐	☒
d. Be located on a site which is included on a list of hazardous materials sites compiled pursuant to Government Code Section 65962.5 and, as a result, would it create a significant hazard to the public or the environment?	☐	☐	☐	☒
e. For a project located within an airport land use plan or, where such a plan has not been adopted, within 2 miles of a public airport or public use airport, would the project result in a safety hazard or excessive noise for people residing or working in the project area?	☐	☐	☐	☒
f. Impair implementation of or physically interfere with an adopted emergency response plan or emergency evacuation plan?	☐	☐	☒	☐
g. Expose people or structures, either directly or indirectly, to a significant risk of loss, injury or death involving wildland fires?	☐	☒	☐	☐

4.9.1 Impact Analysis

a. Would the project create a significant hazard to the public or the environment through the routine transport, use, or disposal of hazardous materials?

Hazardous materials are chemicals that could potentially cause harm during an accidental release and are defined as being toxic, corrosive, flammable, reactive, an irritant, or a strong sensitizer. Hazardous substances include all chemicals regulated under the United States Department of Transportation (USDOT) “hazardous materials” regulations and the United States Environmental Protection Agency (USEPA) “hazardous waste” regulations. Hazardous wastes require special handling and disposal because of their potential to damage public health and the environment. The severity of any such exposure is dependent upon the type, amount, and characteristics of the hazardous material involved; the time, location, and nature of the event; and the sensitivity of the individual or environment affected.

The proposed project would include the demolition of an existing bridge, Tres Pinos Creek slope protection installation, roadway approach work/realignment, and installation of a new bridge across

Tres Pinos Creek. During construction, hazardous materials may be present on site from construction vehicles and demolition debris.

Construction of the proposed project would include the use of heavy equipment for grading, hauling, and handling materials. Use of this equipment may require the use of fuels and other common materials that have hazardous properties (e.g., fuels and oils). These materials would be used in accordance with all applicable laws and regulations and, if used properly, would not pose a hazard to people, animals, plants, or sensitive areas (i.e., Tres Pinos Creek) on or near the project site. As described in **Mitigation Measure BIO-5,** the proposed project would maintain at least a 60 ft setback from riparian habitat for refueling, maintenance, and staging equipment. The use of such hazardous materials would be temporary, and the proposed project would not include a permanent use or source of hazardous materials. During construction, the proposed project would be required to abide by San Benito County General Plan Policy HS-6.1: Hazardous Materials Storage and Disposal, which requires the proper disposal and storage of hazardous materials. Additionally, the construction contractor would prepare and implement an Emergency Response and Cleanup Plan in the event a spill was to occur, as specified in **Mitigation Measure HAZ-1.** As required by Mitigation **Measure BIO-5**, in order to prevent hazardous runoff in the event of a fuel or oil spill, all equipment maintenance and refueling would be conducted within designated areas outside of the Tres Pinos Creek channel. Transportation of hazardous materials would be regulated by the California Highway Patrol (CHP) and Caltrans. **Mitigation Measures HAZ-2 and BIO-5** would require the contractor to adhere to procedures for construction equipment maintenance, refueling, and washing activities.

The proposed project would not include a permanent use or source of hazardous materials. Additionally, the proposed project would not facilitate the routine transport of hazardous materials.

With implementation of **Mitigation Measures HAZ-1, HAZ-2, and BIO-5,** potential impacts associated with the routine transport, use, or disposal of hazardous materials would be reduced to a less than significant level.

Significance Determination: Potentially Significant Impact

Mitigation/Compliance Measures:

Mitigation Measure HAZ-1 — **Emergency Response and Cleanup Plan**. Prior to commencement of construction activities, the construction contractor shall prepare an emergency response and cleanup plan. The construction contractor shall implement the plan during construction. The plan shall detail the methods to be used to contain and clean up a spill of petroleum products or other hazardous materials in the work area.

Mitigation Measure HAZ-2 — **Construction Equipment Maintenance, Refueling, and Washing Activities.** During construction, the construction contractor shall ensure that all equipment maintenance, refueling, and storage are conducted on level ground outside the Tres Pinos Creek channel, away from concentrated flows of stormwater and drainage courses. Drip pans or absorbent pads shall be used during equipment

refueling and maintenance activities. Adequate quantities of absorbent spill clean-up material and spill kits shall be kept in the refueling and maintenance area and on fuel trucks. Spill clean-up and materials shall be disposed of immediately after use.

Significance Determination after Mitigation/Compliance: Less than Significant Impact

b. Would the project create a significant hazard to the public or the environment through reasonably foreseeable upset and accident conditions involving the release of hazardous materials into the environment?

Exposure to hazardous materials during construction and operation of the proposed on-site uses could result from: (1) the improper handling or use of hazardous substances; (2) a transportation accident; or (3) an inadvertent release resulting from an unforeseen event (e.g., fire, flood, or earthquake).

After project construction, the newly developed bridge on Panoche Road crossing Tres Pinos Creek would operate as under existing conditions. The potential for releasing hazardous materials into the environment during project operation would be limited to vehicles traveling on the roadway. This potential exists under existing conditions and would not be exacerbated by implementation of the proposed project because traffic volumes would remain the same. Additionally, the transport of hazardous materials is subject to strict regulations established by State and federal agencies. Therefore, operation of the proposed project would not result in a significant impact associated with hazards from a reasonably foreseeable upset and accident condition involving the release of hazardous materials into the environment.

However, demolition and construction activities at the project site could expose construction workers to potentially hazardous materials, including traffic striping, asbestos-containing materials (ACM), lead-based paint (LBP), and aerially deposited lead (ADL). Hazardous materials shall be excavated, transported, and disposed of in accordance with the rules and regulations of the following agencies: USEPA, Caltrans, the California Department of Toxic Substances Control (DTSC), California Environmental Protection Agency (Cal/EPA), the California Division of Occupational Safety and Health (DOSH), and local regulatory agencies (i.e., the County of San Benito).

Traffic Striping. Traffic striping within the project area would include both yellow and white striping. Lead chromate is the yellow pigment that was used in “safety yellow” colored traffic striping on the majority of California roads. Lead chromate-containing yellow striping materials may contain ~20,000 parts per million (ppm) of lead and ~5,000 ppm of hexavalent chromium. The debris produced when this older yellow striping is ground from the pavement would likely meet the definition of a hazardous waste, unless it is substantially diluted with the underlying pavement material (by using extensive pavement milling). As such, removal of yellow striping on Panoche Road has the potential to expose construction workers to a hazardous material. In order to reduce this potential impact, **Mitigation Measure HAZ-3** would require sampling of waste generated during

striping and, if necessary, handling and disposal of the material as a hazardous waste. Implementation of this mitigation measure would reduce impacts to a less than significant level.

Asbestos-Containing Materials/Lead-Based Paint. The existing bridge spanning Tres Pinos Creek on Panoche Road was built in 1959. Due to the age of the existing bridge, there is a potential for presence of ACM and LBP. Demolition of the existing structure could potentially release airborne particles of hazardous materials that may affect construction workers or the public.

An Asbestos and Lead-containing Paint Survey Report was conducted for the proposed project by Geocon Consultants (2014). As detailed in the Asbestos and Lead-containing Paint Survey Report, investigative sampling concluded that no asbestos was detected, and the Cal/OSHA asbestos standard does not apply for the proposed project.

The USEPA and the DTSC require that LBP with lead concentrations equal to or greater than the United States Department of Housing and Urban Development (HUD) definition of an LBP (greater or equal to 1 milligram per square centimeter [mg/cm^2] or 0.5 percent lead by weight) be removed prior to demolition if the paint is loose and peeling. If the paint is securely adhering to the substrate, the entire material may be disposed of as demolition debris, which is a nonhazardous waste. Loose and peeling paint must be disposed of as a State and/or federal hazardous waste if the concentration of lead exceeds applicable waste thresholds. Investigative samples were taken from the existing bridge barriers and bridge barrier posts and girders to determine concentrations of lead. Lead was detected in both samples. Lead concentrations detected in the sample taken from the bridge barriers would not be classified as California or Federal hazardous, but lead concentration detected in the sample taken from the bridge barrier posts and girders would be classified as California and Federal hazardous if the lead-based paint is removed from the existing pavement. Therefore, removal of the existing Panoche Road Bridge over Tres Pinos Creek and yellow traffic striping of the proposed bridge have the potential to expose construction workers to LBP.

As recommended in the Asbestos and Lead-containing Paint Survey Report, paints at the project site should be treated as lead-containing for purposes of determining the applicability of the Cal/OSHA lead standard during demolition activities.

As described below, **Mitigation Measure HAZ-4** would require compliance with Occupational Safety and Health Administration (OSHA) Standard 1926.6 to protect construction workers while handling or disposing of LBP. Implementation of **Mitigation Measures HAZ-4** would reduce impacts related to the release of airborne LBP to a less than significant level.

Aerially Deposited Lead and Other Potential Soil/Groundwater Contamination. Soils located adjacent to roads (i.e., Panoche Road) may contain elevated concentrations of ADL in exposed surface soils, which could pose a health hazard to construction workers. Potential ADL impacts are anticipated to be limited to the areas of exposed soil at both ends of the bridge where the Panoche Road realignment would be conducted. Although potential soil/groundwater contamination at the project site is unlikely, implementation of **Mitigation Measures HAZ-5 and HAZ-6**, described below, would reduce potential impacts related to ADL and other soil contamination to an impact level that is less than significant.

Significance Determination: Potentially Significant Impact

Mitigation/Compliance Measures:

Mitigation Measure HAZ-3 **Paint Striping Protocol.** During construction, if the contractor is required to remove yellow striping from existing pavement, the waste generated shall be sampled, handled, and disposed of as a hazardous waste. Processes and requirements for removal or grinding of traffic striping shall be conducted in compliance with the current (2018) California Department of Transportation Standard Special Provisions (Caltrans SSPs).

Mitigation Measure HAZ-4 **Lead-Based Paint Abatement Program**. During construction, the construction contractor shall comply with federal Occupational Safety and Health Administration (OSHA) Standard 1926.6 related to lead abatement, and all other applicable State and federal requirements for handling and disposal of lead-based paint (LBP), asbestos-containing materials (ACM), and universal wastes.

Prior to demolition of the existing bridge, LBP and ACM surveys shall be performed by a qualified environmental professional retained by the County of San Benito (County). ACM inspections in California are required to be conducted by a Certified Asbestos Consultant (CAC) or a Certified Site Surveillance Technician (CSST) working under a CAC. The LBP inspection should be conducted by a California Department of Public Health Certified Lead Inspector/Assessor as defined in Title 17 California Code of Regulations (CCR), Division 1, Chapter 8. If any LBP or ACM is identified, it shall be abated and removed from the site in accordance with all applicable regulations, including OSHA requirements. The County shall verify that the surveys and abatement or removal, as necessary, have been completed prior to any demolition and construction activities on the project site.

Mitigation Measure HAZ-5 **Soil Investigation.** Prior to the initiation of project construction, a soil investigation shall be performed by a licensed professional to evaluate whether ADL or other potentially hazardous constituents are present in shallow soils that would be disturbed. Chemical analyses for soil shall be performed by an analytical laboratory certified by the California Department of Public Health Environmental Laboratory Accreditation Program. A licensed professional shall review the results of the soil investigation and provide recommendations on additional investigation activities, if any, and soil management recommendations shall be implemented during project construction, if applicable. The analytical results of the soil investigation shall be compared to hazardous waste criteria

and health and safety thresholds for construction workers. If the analytical results exceed thresholds for construction workers, the County shall oversee that provisions for soil handling and disposal comply with the Caltrans Soil Management Agreement for Aerially Deposited Lead-Contaminated Soils.

Mitigation Measure HAZ-6

Risk Management Plan. Based on the results of the preconstruction soil characterization, the construction contractor shall implement a Risk Management Plan (RMP) that shall identify special soil management and disposal procedures and/or construction worker health and safety procedures to be implemented during project demolition and construction activities to reduce exposure to hazardous materials. The RMP shall include all necessary procedures to ensure that excavated soils are stored, tested, managed, and disposed of in a manner that is protective of human health and in accordance with applicable laws and regulations. The County shall ensure that the RMP includes available data from any pre-project construction soil sampling activities. The County shall provide the RMP to the construction contractor and ensure that the contractor follows the RMP. The RMP shall consider and include the following requirements:

- Excavation, transportation, and placement operations shall result in no visible dust.
- A construction "Exclusion Zone" shall be identified where hazardous materials may be stored. A temporary security fence shall be installed to surround and secure the exclusion zone.
- Air quality shall be monitored during excavation of soils contaminated with hazardous constituents.
- Staging of hazardous materials shall comply with the requirements in CCR Title 22, Sections 6626.250 to 66265.260.
- If temporary stockpiling of hazardous materials is necessary, the construction contractor shall:
    - Cover the stockpile with plastic sheeting or tarps;
    - Install a berm around the stockpile to prevent runoff from leaving the area; and
    - Locate the stockpile away from the unnamed tributary and the Tres Pinos Creek watershed area.

Significance Determination after Mitigation/Compliance: Less than Significant with Mitigation Incorporated

c. Would the project emit hazardous emissions or handle hazardous or acutely hazardous materials, substances, or waste within one-quarter mile of an existing or proposed school?

The proposed project is not located within 0.25 mi of an existing or proposed school, and there are no schools within the project area. The closest school to the project site is Panoche School District and is located approximately 12 mi west at 31441 Panoche Road in Paicines (San Benito County Office of Education n.d.). Therefore, implementation of the proposed project would not result in any impacts associated with emitting hazardous emissions or handling of hazardous or acutely hazardous materials, substances, or waste within 0.25 mi of an existing or proposed school. No impact would occur, and no mitigation is required.

Significance Determination: No Impact

Mitigation/Compliance Measures: No mitigation is required.

Significance Determination after Mitigation/Compliance: No Impact

d. Would the project be located on a site which is included on a list of hazardous materials sites compiled pursuant to Government Code Section 65962.5 and, as a result, would it create a significant hazard to the public or the environment?

The proposed project site is located in a rural area of San Benito County. The EnviroStor website was accessed to determine if a hazardous materials site was located within or near the project site. There are no hazardous materials sites within or adjacent to the project site. The nearest hazardous materials site is 2.7 mi south of the project site and is a State response cleanup site. As such, the proposed project is not located on a site that is included on a list of hazardous materials sites compiled pursuant to Government Code Section 65962.5. No impact would occur, and no mitigation is required.

Significance Determination: No Impact

Mitigation/Compliance Measures: No mitigation is required.

Significance Determination after Mitigation/Compliance: No Impact

e. Would the project be located within an airport land use plan or, where such a plan has not been adopted, within 2 miles of a public airport or public use airport, would the project result in a safety hazard or excessive noise for people residing or working in the project area?

There are no airport land use plans identified by the County near the proposed project site. Furthermore, there are no public airports or public use airports within 2 mi of the project site. Implementation of the proposed project would not result in a safety hazard or excessive noise for

people residing or working in the project area within an airport land use plan or within 2 mi of an airport. No impact would occur, and no mitigation measures are required.

Significance Determination: No Impact

Mitigation/Compliance Measures: No mitigation is required.

Significance Determination after Mitigation/Compliance: No Impact

f. Would the project impair implementation of or physically interfere with an adopted emergency response plan or emergency evacuation plan?

The County adopted the San Benito County Operational Area in August 2015. The proposed project would not interfere with any portion of the adopted plan, and the project site is not within an adopted emergency evacuation plan. Panoche Road is the major road to evacuate rural residents if an emergency (i.e., wildland fire) were to occur. Emergency access on the road would be maintained during construction by keeping one lane open on the existing bridge. Demolition of the existing bridge would not be completed until after the proposed bridge is completed and functional. Implementation of **Mitigation Measure TR-1** would ensure that temporary impacts of project construction associated with emergency access would be less than significant by requiring the development of a Transportation Management Plan (TMP). Once the new bridge is built and the Panoche Road is realigned, the old bridge and Panoche Road approaches would be closed and removed. This type of construction would ensure that Panoche Road remains open during project construction, reducing the potential impact of closing down the only emergency evacuation route from the project area. Impacts would be less than significant, and no mitigation measures would be required.

Significance Determination: Less than Significant Impact

Mitigation/Compliance Measures: No mitigation is required.

Significance Determination after Mitigation/Compliance: Less than Significant Impact

g. Would the project expose people or structures, either directly or indirectly, to a significant risk of loss, injury or death involving wildland fires?

The proposed project site is located in a State Responsibility Areas (SRA) High Fire Hazard Severity Zone according to CAL FIRE mapping. As such, CAL FIRE would respond to wildfires in the project vicinity. During construction of the proposed project, construction equipment being used has the potential to generate sparks that could result in the commencement of a wildfire. In accordance with **Mitigation Measure HAZ-7,** BMPs would be implemented to reduce the potential for spark generation during construction activities. The proposed project would not alter the risk or impacts of wildland fires to residences as compared with the existing conditions. With incorporation of **Mitigation Measure HAZ-7,** potential impacts involving wildland fires would be less than significant with the incorporation of mitigation.

Significance Determination: Potentially Significant Impact

Mitigation/Compliance Measures:

Mitigation Measure HAZ-7 **Fire Prevention Best Management Practices.** During construction, the construction contractor shall ensure the following Best Management Practices (BMPs) to address fire prevention are implemented: installation of spark arrestors on construction equipment; storage of flammable materials in areas away from natural vegetation; limiting of construction activities that could generate sparks on windy days; posting of "No Smoking" signs in the construction area; and providing fire extinguishers in construction areas.

Significance Determination after Mitigation/Compliance: Less than Significant with Mitigation Incorporated

4.10 HYDROLOGY AND WATER QUALITY

	Potentially Significant Impact	Less Than Significant with Mitigation Incorporated	Less Than Significant Impact	No Impact
Would the project:				
a. Violate any water quality standards or waste discharge requirements or otherwise substantially degrade surface or groundwater quality?	☐	☐	☒	☐
b. Substantially decrease groundwater supplies or interfere substantially with groundwater recharge such that the project may impede sustainable groundwater management of the basin?	☐	☐	☒	☐
c. Substantially alter the existing drainage pattern of the site or area, including through the alteration of the course of a stream or river or through the addition of impervious surfaces, in a manner which would:	☐	☐	☒	☐
i. Result in substantial erosion or siltation on- or off-site;	☐	☐	☒	☐
ii. Substantially increase the rate or amount of surface runoff in a manner which would result in flooding on- or offsite;	☐	☐	☒	☐
iii. Create or contribute runoff water which would exceed the capacity of existing or planned stormwater drainage systems or provide substantial additional sources of polluted runoff; or	☐	☐	☒	☐
iv. Impede or redirect flood flows?	☐	☐	☒	☐
d. In flood hazard, tsunami, or seiche zones, risk release of pollutants due to project inundation?	☐	☐	☐	☒
e. Conflict with or obstruct implementation of a water quality control plan or sustainable groundwater management plan?	☐	☐	☒	☐

4.10.1 Impact Analysis

The analysis provided in this section is based on the Location Hydraulic Study Report (WRECO 2013) and the Supplemental Location Hydraulic Report (WRECO 2021) (refer to Appendix E).

a. Would the project violate any water quality standards or waste discharge requirements or otherwise substantially degrade surface or groundwater quality?

Pollutants of concern during construction include sediments, trash, petroleum products, concrete waste (dry and wet), sanitary waste, and chemicals. During construction activities, excavated soil would be exposed, and there would be an increased potential for soil erosion and transport of sediment downstream compared to existing conditions. During a storm event, soil erosion could occur at an accelerated rate. Additionally, construction-related pollutants such as liquid and petroleum products and concrete-related waste, could be spilled, leaked, or transported via storm runoff into adjacent drainages and into downstream receiving waters. Any of these pollutants have the potential to be transported via stormwater runoff into receiving waters (i.e., Tres Pinos Creek).

Project construction is scheduled to occur from July 2025 to October 2025 and from July 2026 to October 2026. Construction within the Tres Pinos Creek is anticipated to take a total of

approximately 2.5 months. The creek is fed by nearby underground springs; therefore, it typically has water flowing year-round. If water is flowing in the creek at the time of construction, it shall be necessary to divert flow around the work area. The proposed project would use a 5 ft diameter pipe culvert upstream of the proposed bridge, diverting water downstream of the existing bridge. After construction is complete, the contractor would remove the pipe culvert and restore all disturbed areas within the creek to preconstruction conditions. Conducting construction activities when there is no or low flow in Tres Pinos Creek would reduce the potential for construction activities to contribute pollutants to downstream receiving waters.

During construction, the total disturbed area would be approximately 3.2 ac. Because the proposed project would disturb greater than 1 ac of soil, the proposed project is subject to the requirements of the Construction General Permit, as specified in **Compliance Measure WQ-1.** In compliance with the Construction General Permit, the construction contractor would be required to prepare a SWPPP and implement Construction BMPs during construction activities. Construction BMPs would include Erosion Control and Sediment Control BMPs designed to minimize erosion and retain sediment on site, as well as Good Housekeeping BMPs to prevent spills, leaks, and discharge of construction debris and waste into receiving waters. Construction BMPs are anticipated to include, but not be limited to, temporary fiber rolls, silt fences, hydroseed erosion controls, and concrete waste management.

Furthermore, as specified in **Mitigation Measure BIO-10,** the proposed project would construct temporary decking or an alternative system over Tres Pinos Creek during demolition of the existing bridge in order to prevent debris from dropping into the water.

With implementation of **Compliance Measure WQ-1** and **Mitigation Measure BIO-10,** which would minimize erosion and prevent the discharge of sediment into receiving waters, construction of the proposed project would not degrade surface water quality. The proposed project would result in a less than significant impact associated with the violation of water quality standards or waste discharge requirements.

According to the Geotechnical Investigation Report (see Appendix D) prepared for the proposed project at the planned location of the new bridge, groundwater is expected to be relatively deep. Due to deep groundwater levels in the project area, groundwater dewatering is not anticipated during construction. Therefore, the proposed project impacts associated with the violation of groundwater quality standards or waste discharge requirements would be less than significant.

Pollutants of concern during operation of the proposed project include suspended solids/sediments, nutrients, pesticides, heavy metals, oil and grease, toxic organic compounds, and trash and debris. The proposed project would result in a net increase in impervious surface area of approximately 0.19 ac. An increase in impervious surface area would increase the volume of runoff during a storm, which would increase the amount of pollutants discharged into downstream receiving waters. Operation of the proposed project would be subject to the postconstruction requirements of the Construction General Permit, as specified in **Compliance Measure WQ-2.** The Construction General Permit requires that the postconstruction runoff match preconstruction runoff for the 85th percentile storm event and requires preservation of the preconstruction drainage density of receiving waters. Furthermore, the Construction General Permit requires the implementation and

maintenance of postconstruction BMPs to reduce pollutants in stormwater discharges. Additionally, replacing the existing bridge with a longer and taller bridge would reduce the potential for future scouring at the bridge foundations, which would reduce sediments in the water and improve water quality.

Implementation of **Compliance Measure WQ-2** and replacement of the existing bridge, reducing scour, and thereby reducing suspended sediments in Tres Pinos Creek, would result in an overall beneficial impact to water quality. With the implementation of **Compliance Measure WQ-2,** the potential operational impacts to surface and groundwater quality related to waste discharge requirements and water quality standards would be less than significant.

Significance Determination: Less Than Significant Impact

Mitigation/Compliance Measures:

Compliance Measure WQ-1 **Construction General Permit.** Prior to commencement of construction activities, the proposed project shall obtain coverage under the State Water Resources Control Board (SWRCB) National Pollutant Discharge Elimination System (NPDES) General Permit for Storm Water Discharges Associated with Construction and Land Disturbance Activities (Order No. 2009-0009-DWQ, as amended by 2010-0014-DWG and 2012-0006-DWQ, NPDES No. CAS000002) (Construction General Permit) or any other subsequent permit. This shall include submission of Permit Registration Documents (PRDs), including a Notice of Intent (NOI) for coverage under the permit to the SWRCB via the Stormwater Multiple Application and Report Tracking System (SMARTS). Construction activities shall not commence until a Waste Discharge Identification Number (WDID) is obtained from SMARTS. A Storm Water Pollution Prevention Plan (SWPPP) shall be prepared and implemented to address all construction-related activities, equipment, and materials that have the potential to affect water quality. The SWPPP shall identify the sources of pollutants that may affect the quality of stormwater and include Best Management Practices (BMPs) to ensure that the potential for soil erosion, sedimentation, and spills is minimized and to control the discharge of pollutants in stormwater runoff as a result of construction activities. Upon completion of construction, a Notice of Termination (NOT) shall be submitted via SMARTS.

Compliance Measure WQ-2 **Postconstruction Construction General Permit Requirements.** Final design of the proposed project shall comply with the postconstruction requirements of the Construction General Permit. A Postconstruction Water Balance Calculator shall be submitted as part of the PRDs that are submitted to the SWRCB via SMARTS. In compliance with the postconstruction requirements of the Construction General Permit, the project engineers shall design the

proposed project so that postconstruction runoff is equal to or less than pre-project runoff for the 85th percentile storm event or the smallest storm event that generates runoff, whichever is larger. Additionally, the project engineer shall design the proposed project to preserve the preconstruction drainage density of Tres Pinos Creek.

Significance Determination after Mitigation/Compliance: Less than Significant Impact

b. Would the project substantially decrease groundwater supplies or interfere substantially with groundwater recharge such that the project may impede sustainable groundwater management of the basin?

As discussed above, groundwater is expected to be relatively deep. Due to deep groundwater levels in the project area, groundwater dewatering is not anticipated during construction. Therefore, construction of the proposed project would not impact existing groundwater supplies or interfere substantially with groundwater recharge.

The proposed project would increase impervious surface area by 0.19 ac, which would decrease infiltration to recharge the aquifer/groundwater and increase stormwater runoff. However, the proposed project is not located within a groundwater basin; therefore, stormwater runoff at the project site does not currently infiltrate and contribute to aquifer/groundwater recharge. Furthermore, the proposed project does not require the use of water, such as for irrigation or landscaping, and therefore would not decrease infiltration through the use of existing water supplies. Therefore, operation of the proposed project would result in a less than significant impact associated with the depletion of groundwater supplies or interference with groundwater recharge. No mitigation is required.

Significance Determination: Less than Significant Impact

Mitigation/Compliance Measures: Refer to **Compliance Measure WQ-2** under Response 4.10.a, above.

Significance Determination after Mitigation/Compliance: Less than Significant Impact

c. Would the project substantially alter the existing drainage pattern of the site or area, including through the alteration of the course of a stream or river or through the addition of impervious surfaces, in a manner which would:

i. Result in substantial erosion or siltation on- or off-site;

During construction activities, excavated soil would be exposed and disturbed, drainage patterns would be temporarily altered during grading and other construction activities, and there would be an increased potential for soil erosion and transport of sediment downstream when compared with existing conditions. Additionally, during a storm event, soil erosion could occur at an accelerated rate. As discussed in Response 4.10.a, above, and specified in **Compliance Measure WQ-1**, the

Construction General Permit requires preparation of a SWPPP and implementation of construction BMPs to reduce impacts to water quality during construction, including those impacts associated with soil erosion and siltation. Construction BMPs are anticipated to include, but not be limited to, temporary fiber rolls, silt fences, hydroseed erosion controls, and concrete waste management.

Additionally, if water is present in Tres Pinos Creek during construction, the creek would be channelized during construction so that it is shifted away from the location of any pier/abutment work. Stream diversion would be required during construction of the pier supports, as water in this section of Tres Pinos Creek generally flows year-round. The proposed project anticipates the use of culverts upstream of the proposed bridge, diverting water downstream of the existing bridge. Separating construction activities from the river flow and channelizing the flow would reduce the potential for erosion to occur within the river. For these reasons, adherence to **Compliance Measure WQ-1** would ensure that construction of the proposed project would result in a less than significant impact related to altering the existing drainage pattern of the project site during construction activities in a manner that would result in substantial erosion or siltation on or off site.

The proposed project would increase impervious surface area by 0.19 ac. Increases in impervious surface area decrease infiltration and increase the volume of runoff during a storm event that can lead to changes in downstream erosion and siltation patterns. As specified in **Compliance Measure WQ-2,** the proposed project would comply with the postconstruction requirements of the Construction General Permit to ensure that postconstruction drainage would not result in substantial erosion or siltation on or off site. In addition, scour countermeasures would be accomplished by leaving either all or a portion of the existing east abutment in place and removing the west abutment. The existing east abutment is in good condition and can be used to protect the stream bank and prevent erosion of the creek bank, which would reduce erosion and siltation on and off the project site. With implementation of **Compliance Measure WQ-2,** potential impacts related to on- or off-site erosion or siltation during project operations would be less than significant.

Significance Determination: Less than Significant Impact

Mitigation/Compliance Measures: Refer to **Compliance Measures WQ-1** and **WQ-2** under Response 4.10.a, above.

Significance Determination after Mitigation/Compliance: Less than Significant Impact

ii. Substantially increase the rate or amount of surface runoff in a manner which would result in flooding on- or offsite;

During construction, soil would be disturbed and compacted, and drainage patterns would be temporarily altered, which can increase the volume and velocity of stormwater runoff and increase the potential for localized flooding compared to existing conditions. As discussed in Response 4.10.a, above, and specified in **Compliance Measure WQ-1,** the Construction General Permit requires preparation of a SWPPP and implementation of construction BMPs to control and direct surface runoff on site. By controlling and directing surface runoff on site, the BMPs would direct additional runoff into the Tres Pinos Creek, which has additional capacity. Because additional runoff during construction would be channeled to the Tres Pinos Creek, construction activities would not result in

on- or off-site flooding. With adherence to **Compliance Measure WQ-1,** construction impacts related to altering the existing drainage pattern of the site or area or increasing the rate or amount of surface runoff in a manner that would result in flooding on or off site would be less than significant.

As discussed above, the proposed project would permanently increase the impervious surface area by 0.19 ac. While an increase in impervious surface area may increase the rate of surface runoff, the proposed project would be required to implement **Compliance Measure WQ-2,** which requires postconstruction runoff to be equal to or less than pre-project runoff for the 85th percentile storm event. Therefore, adherence to **Compliance Measure WQ-2** would reduce postconstruction impacts related to altering the existing drainage pattern of the site or area or increasing the rate or amount of surface runoff in a manner that would result in flooding on or off site to a less than significant level.

Significance Determination: Less than Significant Impact

Mitigation/Compliance Measures: Refer to **Compliance Measures WQ-1 and WQ-2**, under Response 4.10.a, above.

Significance Determination After Mitigation: Less than Significant Impact

iii. Create or contribute runoff water which would exceed the capacity of existing or planned stormwater drainage systems or provide substantial additional sources of polluted runoff; or

As discussed under Response 4.10.a, above, earthwork activities would compact soil (which can increase stormwater runoff during construction), drainage patterns would be temporarily altered during grading and other construction activities, and construction-related pollutants (e.g., liquid and petroleum products and concrete-related waste) could be spilled, leaked, or transported via storm runoff into adjacent drainages and downstream receiving waters. The proposed project would be required to implement **Compliance Measure WQ-1,** and the Construction General Permit requires preparation of a SWPPP and implementation of construction BMPs to control stormwater runoff, including the discharge of pollutants. With adherence to **Compliance Measure WQ-1,** potential impacts related to the creation or contribution of runoff that would exceed the capacity of the stormwater drainage system or provide substantial additional sources of polluted runoff would be less than significant.

As discussed under Response 4.10.b, above, due to the depth of groundwater, groundwater dewatering is not anticipated during construction. Therefore, potential impacts associated with the introduction of substantial sources of polluted runoff from groundwater dewatering during construction would be less than significant.

As discussed above under Response 4.10.c.i, operation of the proposed project would result in a permanent increase of impervious surface area of 0.19 ac compared to existing conditions. However, the proposed project would maintain the overall on-site drainage patterns and continue to direct surface runoff to Tres Pinos Creek. The proposed project would be required to implement **Compliance Measure WQ-2** (which requires postconstruction runoff to be equal to or less than pre-

project runoff for the 85th percentile storm event) and implementation of post construction BMPs to reduce pollutants in stormwater. With adherence to **Compliance Measure WQ-2,** potential postconstruction, project-related impacts associated with excess runoff exceeding the capacity of the existing storm drain system and contributing substantial additional sources of pollutants to the storm drain system would be less than significant.

Significance Determination: Less than Significant Impact

Mitigation/Compliance Measures: Refer to **Compliance Measures WQ-1 and WQ-2** under Response 4.10.a, above.

Significance Determination After Mitigation: Less than Significant Impact

iv. Impede or redirect flood flows?

According to the Federal Emergency Management Agency (FEMA) the proposed project is designated as Zone A, which comprises areas that are subject to inundation by the 1 percent annual chance flood event (100-year floodplain).

The proposed project includes improvements within the 100-year floodplain. The existing 87 ft long bridge would be replaced with a 132 ft long bridge so that the abutments for the proposed bridge could be constructed farther from the banks of the creek. The proposed project would also reduce the number of piers in the channel from two to one. These improvements would increase the channel capacity of Tres Pinos Creek to carry flood flows and decrease water surface elevation relative to the existing condition.

Furthermore, in the existing condition, the existing bridge does not meet the FHWA's freeboard criteria of passing the 100-year flood or the 50-year flood with 2 ft of freeboard. In the existing condition, during a 100-year storm event, the available freeboard is -7.7 ft. As a result, the existing bridge is overtopped during a 100-year flood. The proposed project would raise the new bridge, expand the distance between the abutments, and reduce the number of piers as compared to the existing bridge, which would improve flood flows. In the proposed condition, the available freeboard would be 3.5 ft. As a result, the proposed project would allow for the passing of the 100-year flood under the bridge (refer to the Location Hydraulic Study Report provided in Appendix E).

Therefore, the proposed project would not impede or redirect flood flows, and impacts related to the placement of structures within a 100-year flood hazard area would be less than significant. No mitigation is required.

Significance Determination: Less Than Significant Impact

Mitigation/Compliance Measures: No mitigation is required.

Significance Determination after Mitigation/Compliance: Less than Significant Impact

d. In flood hazard, tsunami, or seiche zones, would the project risk release of pollutants due to project inundation?

The construction of the proposed project would result in a decrease in surface water elevation. According to the Supplemental Location Hydraulic Re (Appendix E), in its existing condition, the existing bridge would be overtopped during the 100-year flow. The proposed project would not be overtopped during the 100-year flow. Therefore, impacts related to risk of pollutant release flooding during storm events would be less than significant. No mitigation is required.

Seiching is a phenomenon that occurs when seismic groundshaking induces standing waves (seiches) inside water retention facilities such as reservoirs and water tanks. Such waves can cause retention structures to fail and flood downstream properties. The water retention facilities closest to the proposed project are the Little Panoche Reservoir and the Paicines Reservoir, which are located approximately 17 mi and 13 mi northeast and northwest of the project site, respectively (USGS 2020). Due to the distance of the proposed project from the nearest water retention facilities, the risk associated with possible seiche waves is not considered a potential constraint or a potentially significant impact. No mitigation is required.

Tsunamis are generated wave trains generally caused by tectonic displacement of the sea floor associated with shallow earthquakes, sea floor landslides, rock falls, and exploding volcanic islands. The bridge is not located in a tsunami inundation area as identified by the DOC Tsunami Inundation Maps (DOC 2022). Due to the distance of the proposed project from the ocean (greater than 25 mi) and its location outside any tsunami inundation areas, the risk associated with tsunamis is not considered a potential constraint or a potentially significant impact. No mitigation is required.

Significance Determination: No Impact

Mitigation/Compliance Measures: No mitigation is required.

Significance Determination after Mitigation/Compliance: No Impact

e. Would the project conflict with or obstruct implementation of a water quality control plan or sustainable groundwater management plan?

The project is within the jurisdiction of the Central Coast RWQCB. The Central Coast RWQCB adopted a Water Quality Control Plan (i.e., Basin Plan) (June 1971, with amendments effective on or before June 2019), which designates beneficial uses for all surface and groundwater within its jurisdiction and established the water quality objectives and standards necessary to protect those beneficial uses. As summarized below, the project would comply with the applicable NPDES permits and State and local regulations and would implement construction BMPs to reduce pollutants of concern and stormwater runoff. NPDES permits and associated BMPs are designed to ensure that the water quality objectives in the Water Quality Control Plan are not exceeded and that beneficial uses of receiving waters are not impaired.

As discussed above in Response 4.10.a, during construction activities, soil would be disturbed and there would be an increased potential for soil erosion compared to existing conditions.

Construction-related pollutants such as liquid and petroleum products and concrete-related waste could be spilled, leaked, or transported via storm runoff into adjacent drainages and into downstream receiving waters. As specified in **Compliance Measure WQ-1,** the proposed project would be required to prepare a SWPPP and implement construction BMPs during construction to control stormwater runoff, including the discharge of pollutants. Therefore, project construction would comply with the applicable NPDES permits and local and State regulations. The proposed project includes the installation of RSP on both sides of the creek banks to protect the abutments from hydraulic scour, which would reduce sediments in the water and improve water quality. The RSP would also prevent erosion of the creek banks. Because the proposed project would comply with NPDES requirements, including implementation of construction and postconstruction BMPs, the project would not result in water quality impacts that would conflict with the Central Coast RWQCB's Basin Plan. Therefore, impacts related to conflict with a water quality control plan would be less than significant.

The Sustainable Groundwater Management Act (SGMA) was enacted in September 2014. The SGMA requires governments and water agencies of high- and medium-priority basins to halt overdraft of groundwater basins. The SGMA requires the formation of local groundwater sustainability agencies (GSAs) in high- and medium-priority basins. These agencies are required to adopt Groundwater Sustainability Plans to manage the sustainability of the groundwater basins. The project site is not located within a groundwater basin. Therefore, the proposed project would not result in impacts related to a conflict with or obstruction of a sustainable groundwater management plan.

Significance Determination: Less than Significant Impact

Mitigation/Compliance Measures: Refer to **Compliance Measure WQ-1** above.

Significance Determination after Mitigation/Compliance: Less than Significant Impact

4.11 LAND USE AND PLANNING

	Potentially Significant Impact	Less Than Significant with Mitigation Incorporated	Less Than Significant Impact	No Impact
Would the project:				
a. Physically divide an established community?	☐	☐	☐	☒
b. Cause a significant environmental impact due to a conflict with any land use plan, policy, or regulation adopted for the purpose of avoiding or mitigating an environmental effect?	☐	☐	☐	☒

4.11.1 Impact Analysis

Refer to Section 3.0, Environmental Factors Potentially Affected and Determination.

4.12 MINERAL RESOURCES

	Potentially Significant Impact	Less Than Significant with Mitigation Incorporated	Less Than Significant Impact	No Impact
Would the project:				
a. Result in the loss of availability of a known mineral resource that would be of value to the region and the residents of the state?	☐	☐	☐	☒
b. Result in the loss of availability of a locally-important mineral resource recovery site delineated on a local general plan, specific plan or other land use plan?	☐	☐	☐	☒

4.12.1 Impact Analysis

Refer to Section 3.0, Environmental Factors Potentially Affected and Determination.

4.13 NOISE

	Potentially Significant Impact	Less Than Significant with Mitigation Incorporated	Less Than Significant Impact	No Impact
Would the project result in:				
a. Generation of a substantial temporary or permanent increase in ambient noise levels in the vicinity of the project in excess of standards established in the local general plan or noise ordinance, or applicable standards of other agencies?	☐	☐	☒	☐
b. Generation of excessive groundborne vibration or groundborne noise levels?	☐	☐	☒	☐
c. For a project located within the vicinity of a private airstrip or an airport land use plan or, where such a plan has not been adopted, within 2 miles of a public airport or public use airport, would the project expose people residing or working in the project area to excessive noise levels?	☐	☐	☐	☒

The information in this section is based on the *Technical Noise Memorandum* prepared for the Project in February 2021, provided in Appendix F.

a. Would the project result in generation of a substantial temporary or permanent increase in ambient noise levels in the vicinity of the project in excess of standards established in the local general plan or noise ordinance, or applicable standards of other agencies?

Short-term (construction) and long-term (operational) noise impacts of the proposed project are described below.

Two types of short-term noise impacts would occur during project construction: (1) equipment delivery and construction worker commutes; and (2) project construction operations. The first type of short-term construction noise would result from transport of construction equipment and materials to the project site and construction worker commutes. These transportation activities would incrementally raise noise levels on access roads leading to the site. It is expected that larger trucks used in equipment delivery shall generate higher noise impacts than trucks associated with worker commutes. As shown in Table 4.C, the single-event noise from equipment trucks passing at a distance of 50 ft from a sensitive noise receptor would reach a maximum level of 84 A-weighted decibels (dBA) maximum instantaneous sound level (L_{max}). However, the pieces of heavy equipment for grading and construction activities would be moved on site just one time and would then remain for the duration of each construction phase. This one-time trip, when heavy construction equipment is moved on and off site, would not add to the daily traffic noise in the project vicinity. Furthermore, the projected traffic from the construction worker commutes would be minimal when compared to existing traffic volumes on Panoche Road and other affected streets, and its associated long-term noise level change would not be perceptible. Therefore, equipment transport noise and construction-related worker commute impacts would be short-term and would not be substantial.

Table 4.C: Typical Construction Equipment Noise Levels

Equipment Description	Maximum Noise Level (L_{max}) at 50 Feet[1]
Backhoes	80
Compactor (ground)	80
Cranes	85
Dozers	85
Dump Trucks	84
Excavators	85
Flat-Bed Trucks	84
Front-end Loaders	80
Graders	85
Impact Pile Drivers	95
Jackhammers	85
Pick-up Truck	55
Pneumatic Tools	85
Pumps	77
Rock Drills	85
Rollers	85
Scrapers	85
Tractors	84

Source: *Federal Highway Administration Roadway Construction Noise Model* (January 2006).

[1] Maximum noise levels were developed based on Spec 721.560 from the Central Artery/Tunnel (CA/T) program to be consistent with the City of Boston's Noise Code for the "Big Dig" project.

Note: Noise levels reported in this table are rounded to the nearest whole number.

L_{max} = maximum instantaneous sound level

The second type of short-term noise impact is related to noise generated during project construction. Construction is performed in discrete steps, each having its own mix of equipment and, consequently, its own noise characteristics. These various sequential phases would change the character of the noise generated, as well as the noise levels in the study area as construction progresses. Despite the variety in the type and size of construction equipment, similarities in the dominant noise sources and patterns of operation allow construction-related noise ranges to be categorized by work phase. Table 4.C lists typical construction equipment noise levels (L_{max}) recommended for noise impact assessments based on a distance of 50 ft between the equipment and a noise receptor.

Normal construction operations, specifically during the site preparation phase, which includes excavation and grading, may generate high noise levels from an active construction area. Earthmoving equipment includes excavating machinery such as excavators, bulldozers, and front-end loaders. Earthmoving and compacting equipment includes compactors, scrapers, and graders. Typical operating cycles for these types of construction equipment may involve 1 or 2 minutes of full-power operation followed by 3 or 4 minutes at lower power settings.

Noise associated with the use of earthmoving construction equipment is estimated between 55 and 85 dBA L_{max} at a distance of 50 ft from each piece of equipment. As seen in Table 4.C, the maximum noise level generated by each excavator, bulldozer, and pick-up truck is assumed to be

approximately 85 dBA L_{max}, 85 dBA L_{max}, and 55 dBA L_{max} at 50 ft, respectively. Each piece of construction equipment operates as an individual point source. The conservative composite noise level during this phase of construction would be 88 dBA L_{max} at a distance of 50 ft from an active construction area.

The proposed project is located in a rural area. The closest residential unit, the single-family home on parcel APN 0271500030, would be 140 ft from the nearest general construction activity. The results of the equations above show that this residential unit may be subject to short-term noise reaching 79.1 dBA L_{max} generated by general construction activities. The short-term construction-related noise levels that the single-family residential unit would be exposed to do not exceed Caltrans construction noise thresholds and would be exempt from the San Benito County Code based on Section 19.39.051(H) as long as construction activities occur only between 7:00 a.m. and 7:00 p.m., Monday through Saturday. **Compliance Measure NOI-1** would require construction to occur only between the hours of 7:00 a.m. and 7:00 p.m., Monday through Saturday. **Compliance Measure NOI-2** would require all internal combustion engines to be used with the manufacturer-recommended muffler. Implementation of **Compliance Measures NOI-1 and NOI-2** would ensure that the construction-related noise impacts would comply with San Benito County Code. As such, impacts would be less than significant, and no mitigation would be required.

The proposed project is a bridge replacement project. Implementation of the proposed project would not generate additional vehicular traffic on the bridge or roadway approaches compared to existing conditions. Operation of the proposed project would not result in any long-term changes in noise sources or noise levels in the project area beyond the existing conditions. Operation of the proposed project would not expose people to or generate noise levels in excess of established County or Caltrans standards. As such, impacts would be less than significant, and no mitigation is required.

Significance Determination: Less than Significant Impact

Mitigation/Compliance Measures:

Compliance Measure NOI-1 — **Construction Hours.** During construction, the construction contractor shall ensure that construction activities on the project site occur Monday through Saturday between the hours of 7:00 a.m. and 7:00 p.m. to comply with construction noise exemptions set forth by San Benito County Code Chapters 19.39 and 25.37. No construction activity may occur on the project site outside of these hours, on a Sunday, or on a federal/State holiday.

Compliance Measure NOI-2 — **Muffler Compliance.** During construction, the contractor shall equip all internal combustion engines with the manufacturer-recommended muffler and shall not operate any internal combustion engine on the job site without its appropriate muffler.

Significance Determination after Mitigation/Compliance: Less than Significant Impact

b. Would the project result in generation of excessive groundborne vibration or groundborne noise levels?

Groundborne noise in buildings and structures is produced when interior surfaces such as walls and floors are "excited" into motion by groundborne vibrations transmitted into a given structure. In general, groundborne vibrations from standard construction practices are only a potential structural damage issue when within 25 ft of sensitive structures. Because construction is not proposed within 25 ft of any sensitive or fragile structures, the potential impact of groundborne vibration on sensitive structures in the project vicinity is considered less than significant. No mitigation is required.

The proposed project is a bridge rehabilitation project, and implementation of the proposed project would not generate additional vehicular traffic. Operation of the proposed project would not be a source of substantial groundborne vibration and would not expose persons to excessive levels of groundborne noise or vibration. The proposed project would not result in long-term operational impacts associated with groundborne vibration or noise levels. As such, impacts would be less than significant, and no mitigation is required.

Significance Determination: Less than Significant Impact

Mitigation/Compliance Measures: No mitigation is required.

Significance Determination after Mitigation/Compliance: Less than Significant Impact

c. For a project located within the vicinity of a private airstrip or an airport land use plan or, where such a plan has not been adopted, within 2 miles of a public airport or public use airport, would the project expose people residing or working in the project area to excessive noise levels?

The proposed project is not located in an airport land use plan or within 2 mi of a public airport. Implementation of the proposed project would not expose people residing or working in the project area to excessive noise levels. No impact would occur, and no mitigation is required.

Significance Determination: No Impact

Mitigation/Compliance Measures: No mitigation is required.

Significance Determination after Mitigation/Compliance: No Impact

4.14 POPULATION AND HOUSING

	Potentially Significant Impact	Less Than Significant with Mitigation Incorporated	Less Than Significant Impact	No Impact
Would the project:				
a. Induce substantial unplanned population growth in an area, either directly (for example, by proposing new homes and businesses) or indirectly (for example, through extension of roads or other infrastructure)?	☐	☐	☐	☒
b. Displace substantial numbers of existing people or housing, necessitating the construction of replacement housing elsewhere?	☐	☐	☐	☒

4.14.1 Impact Analysis

Refer to Section 3.0, Environmental Factors Potentially Affected and Determination.

4.15 PUBLIC SERVICES

	Potentially Significant Impact	Less Than Significant with Mitigation Incorporated	Less Than Significant Impact	No Impact
Would the project:				
a. Result in substantial adverse physical impacts associated with the provision of new or physically altered governmental facilities, need for new or physically altered governmental facilities, the construction of which could cause significant environmental impacts, in order to maintain acceptable service ratios, response times or other performance objectives for any of the public services:				
i. Fire protection?	☐	☐	☐	☒
ii. Police protection?	☐	☐	☐	☒
iii. Schools?	☐	☐	☐	☒
iv. Parks?	☐	☐	☐	☒
v. Other public facilities?	☐	☐	☐	☒

4.15.1 Impact Analysis

Refer to Section 3.0, Environmental Factors Potentially Affected and Determination.

4.16 RECREATION

	Potentially Significant Impact	Less Than Significant with Mitigation Incorporated	Less Than Significant Impact	No Impact
a. Would the project increase the use of existing neighborhood and regional parks or other recreational facilities such that substantial physical deterioration of the facility would occur or be accelerated?	☐	☐	☐	☒
b. Does the project include recreational facilities or require the construction or expansion of recreational facilities which might have an adverse physical effect on the environment?	☐	☐	☐	☒

4.16.1 Impact Analysis

Refer to Section 3.0, Environmental Factors Potentially Affected and Determination.

4.17 TRANSPORTATION

	Potentially Significant Impact	Less Than Significant with Mitigation Incorporated	Less Than Significant Impact	No Impact
Would the project:				
a. Conflict with a program, plan, ordinance or policy addressing the circulation system, including transit, roadway, bicycle and pedestrian facilities?	☐	☐	☒	☐
b. Conflict or be inconsistent with CEQA Guidelines §15064.3, subdivision (b)?	☐	☐	☒	☐
c. Substantially increase hazards due to a geometric design feature (e.g., sharp curves or dangerous intersections) or incompatible uses (e.g., farm equipment)?	☐	☐	☒	☐
d. Result in inadequate emergency access?	☐	☐	☒	☐

a. Would the project conflict with a program plan, ordinance or policy addressing the circulation system, including transit, roadway, bicycle and pedestrian facilities?

The proposed project is an infrastructure rehabilitation project that would involve the replacement of the existing 87 ft long and 16 ft wide bridge structure with a 132 ft long and 35 ft wide bridge that would be approximately 5 to 6 ft higher than the existing bridge deck to allow for adequate freeboard. Additionally, RSP would be placed along the banks of the creek, a retaining wall would be installed against the hillside east of the creek and south of the roadway, and roadway improvements would be completed.

Construction of the proposed project would last approximately 13 months in duration and there would be an average of 5 to 10 workers per day on the construction site. During this period, temporary and intermittent transportation impacts would result from additional vehicle trips to the project site from workers and equipment deliveries. The existing bridge which will be used to maintain traffic by keeping one lane open during construction. Demolition of the existing bridge would not be completed until after the proposed bridge is completed and functional. Roadway work consists of realigning the roadway downstream (southerly) of the existing bridge to allow construction of the new bridge in one stage, and a temporary crash cushion and railing would be installed between the construction area and the existing bridge which will be used to maintain traffic by keeping one lane open during construction. Access to driveways off of Panoche Road would also be maintained throughout the duration of construction. Therefore, construction of the proposed project would not conflict with any adopted program, plan, or adopted ordinance and impacts would be considered less than significant. No mitigation is required.

The proposed project would not result in changes to local transportation patterns, would not impede normal traffic flows or circulation in the area, and would not conflict with a program, plan, ordinance, or policy addressing the circulation system. There are no bicycle or pedestrian facilities on Panoche Road, and public transit does not operate along Panoche Road. Overall, project operations would not alter current transportation uses, traffic volumes, or circulation at the project site. Therefore, operation of the proposed project would not conflict with a program, plan,

ordinance, or policy addressing the circulation system, including transit, roadway, bicycle, and pedestrian facilities, and impacts would be less than significant. No mitigation is required.

Significance Determination: Less than Significant Impact

Mitigation/Compliance Measures: No mitigation is required.

Significance Determination after Mitigation/Compliance: Less than Significant Impact

b. Would the project conflict or be inconsistent with CEQA Guidelines §15064.3, subdivision (b)?

On September 27, 2013, California Governor Jerry Brown signed SB 743 into law and started a process that changed the way transportation impact analysis is conducted as part of CEQA compliance. These changes include elimination of automobile delay, level of service (LOS), and other similar measures of vehicular capacity or traffic congestion as a basis for determining significant impacts under CEQA. According to SB 743, these changes are intended to "more appropriately balance the needs of congestion management with Statewide goals related to infill development, promotion of public health through active transportation, and reduction of greenhouse gas emissions."

In December 2018, the State Office of Planning and Research (OPR) completed an update to the *CEQA Guidelines* to implement the requirements of SB 743. The *CEQA Guidelines* state that vehicle miles traveled (VMT) must be the metric used to determine significant transportation impacts. The *CEQA Guidelines* require all Lead Agencies in California to use VMT-based thresholds of significance in CEQA documents published after July 1, 2020. *CEQA Guidelines* Section 15064.3, subdivision (b), states that "Transportation projects that reduce, or have no impact on, vehicle miles traveled should be presumed to cause a less than significant transportation impact."

OPR's Technical Advisory provides a list of transportation project types that would not likely result in a substantial or measurable increase in vehicle travel and, therefore, generally should not require an induced travel analysis. Included on this list are rehabilitation, maintenance, replacement, safety, and repair projects that are designed to improve the condition of existing transportation assets and do not add additional motor vehicle capacity (OPR 2018). As previously discussed, the proposed project would involve the replacement of the existing 87 ft long and 16 ft wide structure with a 132 ft long and 35 ft wide structure that would be approximately 5 to 6 ft higher than the existing bridge deck to allow for adequate freeboard. Additionally, RSP would be placed along the banks of the creek, a retaining wall would be installed against the hillside east of the creek and south of the roadway, and roadway improvements would be completed. Therefore, because the project would involve the rehabilitation, maintenance, and replacement of the existing bridge and roadways and would not increase the existing roadway and bridge capacity, it can be presumed that the proposed project would have a less than significant impact related to VMT and no mitigation is required.

Significance Determination: Less than Significant Impact

Mitigation/Compliance Measures: No mitigation is required.

Significance Determination after Mitigation/Compliance: Less than Significant Impact

c. Would the project substantially increase hazards due to a geometric design feature (e.g., sharp curves or dangerous intersections) or incompatible uses (e.g., farm equipment)?

The proposed project would involve replacement of the existing bridge and completion of other roadway improvements. The existing bridge has a 16 ft travel width, no shoulders, and a slight "S" curve to accommodate the angle of the bridge crossing and does not meet current AASHTO design standards for minimum design speed or width. In addition, the existing roadway approaches have no shoulders and thus do not meet the AASHTO 3 ft minimum shoulder width standard for a Local Road. The new bridge would be 132 ft long and 35 ft wide and would raise the bridge deck by approximately 5 to 6 ft to allow for adequate freeboard. The slight "S" curve over the existing bridge would be eliminated, and the driveway intersection at Panoche Road would be shifted west by up to 40 ft in order to improve truck turning access. Other roadway work would consist of realigning the roadway downstream (southerly) of the existing bridge to allow the existing bridge to remain open during stage construction.

These elements would result in a slightly altered roadway design compared to current conditions. However, said elements would not result in any substantial changes to the roadway. Furthermore, the proposed project would bring the facility up to current AASHTO bridge and road design standards; enhance overall traffic safety; comply with County, Caltrans, and AASHTO design standards; and improve the seismic resistance of the structure. Therefore, the proposed project would not substantially increase hazards due to a design feature. Impacts would be less than significant, and no mitigation is required.

Significance Determination: Less than Significant Impact

Mitigation/Compliance Measures: No mitigation is required.

Significance Determination after Mitigation/Compliance: Less than Significant Impact

d. Would the project result in inadequate emergency access?

Emergency services in the proposed project area are provided by CAL FIRE for fire and emergency services and by the San Benito County Sheriff's Office for police services. The proposed project is an infrastructure rehabilitation project and would not result in the construction of any structures for occupancy that would require additional emergency services. The project would result in the replacement of an existing bridge that is 16 ft wide with no shoulders. The new bridge would be approximately 132 ft long by approximately 35 ft wide with two equal 12 ft spans and 4 ft wide concrete shoulders along each side of the travel lanes. Additionally, the slight "S" curve over the existing bridge would be eliminated and the driveway intersection at Panoche Road would be shifted west by up to 40 ft in order to improve truck turning access. Therefore, after the completion of construction, implementation of the proposed project would improve both emergency access and truck turning access.

Project construction would occur year-round between June 2025 and October 2026, lasting approximately 13 months, and would not require any road closures or detours. The replacement bridge would be constructed south of the existing bridge, and the existing bridge would be demolished after the completion of new bridge construction. Emergency access on the road would be maintained during construction by keeping one lane open on the existing bridge. Demolition of the existing bridge would not be completed until after the proposed bridge is completed and functional. Access to driveways off of Panoche Road would also be maintained throughout the duration of construction. To address impacts on travel times for emergency vehicles, the County would be required to implement **Mitigation Measure TR-1. Mitigation Measure TR-1** would require the development of a TMP in coordination with emergency service providers, Caltrans, and the County to address lane closures and traffic control, including flagging. The TMP would also require the County to provide regular communication to Caltrans, emergency service providers, and property owners in the project vicinity throughout the construction period in order to minimize disruption associated with lane closures. With implementation of **Mitigation Measure TR-1,** temporary impacts of project construction associated with emergency access would be less than significant. Therefore, impacts to emergency services would be less than significant.

Significance Determination: Potentially Significant Impact

Mitigation/Compliance Measures:

Mitigation Measure TR-1 **Transportation Management Plan (TMP).** As part of the project final design, the County of San Benito (County), in coordination with emergency service providers and the California Department of Transportation (Caltrans), shall prepare a TMP to determine the traffic control approach (e.g., flagging and signage) and notify neighboring property owners of the lane closure. During construction, the County shall require the construction contractor to adhere to all requirements of the TMP.

Significance Determination after Mitigation/Compliance: Less than Significant Impact

4.18 TRIBAL CULTURAL RESOURCES

	Potentially Significant Impact	Less Than Significant with Mitigation Incorporated	Less Than Significant Impact	No Impact
Would the project:				
a. Cause a substantial adverse change in the significance of a tribal cultural resource, defined in Public Resources Code Section 21074 as either a site, feature, place, cultural landscape that is geographically defined in terms of the size and scope of the landscape, sacred place, or object with cultural value to a California Native American tribe, and that is:				
i. Listed or eligible for listing in the California Register of Historical Resources, or in a local register of historical resources as defined in Public Resources Code Section 5020.1(k)? Or	☐	☐	☐	☒
ii. A resource determined by the lead agency, in its discretion and supported by substantial evidence, to be significant pursuant to criteria set forth in subdivision (c) of Public Resources Code Section 5024.1? In applying the criteria set forth in subdivision (c) of Public Resource Code Section 5024.1, the lead agency shall consider the significance of the resource to a California Native American tribe.	☐	☐	☐	☒

AB 52, a law signed by then-Governor Jerry Brown in 2014, amended CEQA to require tribal cultural resources to be considered as potentially significant cultural resources under the CEQA environmental review process. The procedures under AB Bill 52 offer tribes an opportunity to take an active role in the CEQA process in order to protect tribal cultural resources. Pursuant to AB 52, if a Native American identifies tribal cultural resources within a project site, the Native American shall contact the local Lead Agency.

As discussed in Section 4.5, Cultural Resources, the findings of the HPSR support a finding that there are no known historical resources in the project site. To address tribal cultural resources, the NAHC was contacted on May 16, 2022, to conduct a Sacred Lands File search and provide a Native American Consultation List for the project. The NAHC responded on June 26, 2022, that the Sacred Lands File search was negative for the presence of tribal cultural resources and provided a list of Native American contacts to be sent project notification letters per AB 52.

a. Would the project cause a substantial adverse change in the significance of a tribal cultural resource, defined in Public Resources Code Section 21074 as either a site, feature, place, cultural landscape that is geographically defined in terms of the size and scope of the landscape, sacred place, or object with cultural value to a California Native American tribe, and that is:

i. Listed or eligible for listing in the California Register of Historical Resources, or in a local register of historical resources as defined in Public Resources Code Section 5020.1(k)? Or

ii. A resource determined by the lead agency, in its discretion and supported by substantial evidence, to be significant pursuant to criteria set forth in subdivision (c) of Public Resources Code Section 5024.1? In applying the criteria set forth in subdivision (c) of Public Resource Code Section 5024.1, the lead agency shall consider the significance of the resource to a California Native American tribe.

As discussed in Section 4.5, Cultural Resources, record searches were conducted on August 26, 2011, and April 10, 2020, at the Northwest Information Center of the California Historical Resources Information System and did not identify any previously recorded cultural resources within the project site or the 0.5 mi search radius. Field surveys conducted on November 2, 2011, April 2, 2011, and July 10, 2012, did not identify any archaeological artifacts or sites. An updated intensive pedestrian survey of the project site conducted on April 2, 2020, resulted in the identification of one precontact-period bedrock milling station archaeological site (LSA-PRB-001) and two isolated artifacts (PRB-ISO-001, a cryptocrystalline core, and PRB-ISO-002, a hopper mortar). The proposed project has been designed to avoid bedrock milling feature LSA-PRB-001, and this archaeological resource would not be affected by the proposed project. As isolated artifacts with no informational potential, no special or particular qualities, and no direct association with scientifically recognized prehistoric or historic events or persons, archaeological resources PRB-ISO-001 and PRB-ISO-002 do not qualify as historical or unique archaeological resources. Per PRC Section 21083.2(h), non-unique archaeological resources warrant no additional consideration under CEQA other than recording of the resource, which has been conducted.

Native American consultation was conducted in compliance with AB 52. On July 1, 2022, AB 52 consultation letters were sent to all Native American contacts identified by the NAHC on June 26, 2022. No responses or requests for consultation were received as a result of the AB 52 consultation letters.

As such, there are no known significant archaeological or tribal cultural resources within the project site and the proposed project would not cause a substantial adverse change in the significance of a tribal cultural resource defined as a site, feature, place, cultural landscape that is geographically defined in terms of the size and scope of the landscape, sacred place, or object with cultural value to a California Native American Tribe, and that is listed or eligible for listing in the California Register of or in a local register of historical resources as defined in PRC Section 5020.1(k).

Additionally, there are no tribal cultural resources within the project site that have been determined by the lead agency to be significant pursuant to criteria set forth in subdivision (c) of Public Resources Code Section 5024.1. The proposed project would not cause a substantial adverse change in the significance of a tribal cultural resource defined as a site, feature, place, cultural landscape that is geographically defined in terms of the size and scope of the landscape, sacred place, or object

with cultural value to a California Native American Tribe, and that is listed or eligible for listing in the California Register of or in a local register of historical resources as defined in PRC Section 5020.1(k).

No impacts would occur to tribal cultural resources, and no mitigation is required.

Significance Determination: No Impact

Mitigation/Compliance Measures: No mitigation is required.

Significance Determination after Mitigation/Compliance: No Impact

4.19 UTILITIES AND SERVICE SYSTEMS

	Potentially Significant Impact	Less Than Significant with Mitigation Incorporated	Less Than Significant Impact	No Impact
Would the project:				
a. Require or result in the relocation or construction of new or expanded water, wastewater treatment or stormwater drainage, electric power, natural gas, or telecommunications facilities, the construction or relocation of which could cause significant environmental effects?	☐	☐	☒	☐
b. Have sufficient water supplies available to serve the project and reasonably foreseeable future development during normal, dry and multiple dry years?	☐	☐	☒	☐
c. Result in a determination by the wastewater treatment provider which serves or may serve the project that it has adequate capacity to serve the project's projected demand in addition to the provider's existing commitments?	☐	☐	☒	☐
d. Generate solid waste in excess of State or local standards, or in excess of the capacity of local infrastructure, or otherwise impair the attainment of solid waste reduction goals?	☐	☐	☒	☐
e. Comply with federal, state, and local management and reduction statutes and regulations related to solid waste?	☐	☐	☐	☒

a. Would the project require or result in the relocation or construction of new or expanded water, wastewater treatment or stormwater drainage, electric power, natural gas, or telecommunications facilities, the construction or relocation of which could cause significant environmental effects?

The proposed project is an infrastructure rehabilitation project that would involve the replacement of the existing 87 ft long and 16 ft wide bridge structure with a 132 ft long and 35 ft wide bridge that would be approximately 5 to 6 ft higher than the existing bridge deck to allow for adequate freeboard. Additionally, RSP would be placed along the banks of the creek, a retaining wall would be installed against the hillside east of the creek and south of the roadway, and roadway improvements would be completed.

During construction, nominal amounts of water would be used for dust control purposes and other construction activities. Water would be trucked in from locations within San Benito County and would not require the relocation or construction of new expanded water facilities. Portable bathroom facilities would be maintained on site during construction and would be taken off site to local wastewater treatment facilities to be disposed of. The estimated amount of wastewater generated by construction workers on site would be nominal and would not require or result in the relocation or construction of new or expanded wastewater treatment facilities. Utilities such as natural gas lines and telecommunication infrastructure are not located within the project footprint and would not require relocation. Project construction may require the relocation of existing power poles/power lines. Any poles that are in conflict would be relocated and the overhead line would be shifted to the new relocated poles. The relocation of any power poles/power lines would occur with coordination between the construction contractor and the electricity service provider that owns and

maintains the lines to ensure relocation is completed safely and with minimal impacts to existing conditions.

Overall, implementation of the proposed project would not require or result in the relocation or construction of utility infrastructure that may cause significant environmental effects. Impacts would be less than significant, and no mitigation is necessary.

Significance Determination: Less than Significant Impact

Mitigation/Compliance Measures: No mitigation is required.

Significance Determination after Mitigation/Compliance: Less than Significant Impact

b. Would the project have sufficient water supplies available to serve the project and reasonably foreseeable future development during normal, dry and multiple dry years?

The proposed project would likely require water during construction for dust control and other construction activities. Water would be trucked in from pre-determined water haulers in San Benito County and would be stored on site in water trucks through the duration of construction. The amount of water that would be needed during project construction would be nominal compared to the water supplies available within San Benito County. After the completion of construction, project operation would not require the use or consumption of any water resources. Overall, considering the minimal amount of water needed for project construction, there would be sufficient water supplies during normal, dry, and multiple dry years for implementation of the proposed project. Impacts would be less than significant, and no mitigation would be required.

Significance Determination: Less than Significant Impact

Mitigation/Compliance Measures: No mitigation is required.

Significance Determination after Mitigation/Compliance: Less than Significant Impact

c. Would the project result in a determination by the wastewater treatment provider which serves or may serve the project that it has adequate capacity to serve the project's projected demand in addition to the provider's existing commitments?

The proposed project is a bridge replacement and roadway improvement project and, as such, does not involve uses requiring significant wastewater treatment. Any wastewater generated during construction of the proposed project would be temporary and would be disposed of properly by the project contractor as required by the Construction General Permit. Portable toilets would be maintained on site throughout the construction period and would be serviced regularly by a service provider. Construction of the proposed project would last approximately 13 months, and the anticipated average number of workers per day on the construction site would be 5 to 10 persons. Therefore, the amount of wastewater estimated to be generated during project construction activities would be nominal and within the available capacity of existing service providers.

Operation of the proposed project would be similar to the existing use and would not include any uses that require wastewater treatment. The proposed project would not require or result in the construction of new wastewater treatment facilities or the expansion of existing facilities. Impacts would be less than significant, and no mitigation is required.

Significance Determination: Less than Significant Impact

Mitigation/Compliance Measures: No mitigation is required.

Significance Determination after Mitigation/Compliance: Less than Significant Impact

d. Would the project generate solid waste in excess of State or local standards, or in excess of the capacity of local infrastructure, or otherwise impair the attainment of solid waste reduction goals?

The proposed project includes the demolition of the existing bridge on Panoche Road spanning Tres Pinos Creek. Construction demolition debris is anticipated to be collected and transferred to John Smith Road Landfill located at 2650 John Smith Road in Hollister. John Smith Road Landfill has a maximum daily throughput of 1,000 tons and a total permitted capacity of 9,797,000 cy. As of April 30, 2021, the landfill has a remaining capacity of 1,921,000 cy and an anticipated closing date of August 1, 2025 (CalRecycle n.d.). Construction debris generated by the proposed project is anticipated to be nominal and well below the 1,000 tons per day that the nearest landfill can accommodate. Additionally, California law requires 50 percent of all solid waste to be diverted from landfills through source reduction, recycling, and composting. The proposed project, once operational, would not generate solid waste as it is a transportation (bridge replacement) project. As such, the proposed project would not generate an amount of solid waste in excess of State or local standards, or in excess of the capacity of John Smith Road Landfill. Impacts would be less than significant, and no mitigation is required.

Significance Determination: Less than Significant Impact

Mitigation/Compliance Measures: No mitigation is required.

Significance Determination after Mitigation/Compliance: Less than Significant Impact

e. Would the project comply with federal, state, and local management and reduction statutes and regulations related to solid waste?

The proposed project would only generate construction debris, which would be recycled as appropriate and consistent with federal, State, and local management and solid waste reduction statutes. Per California law, 50 percent of the construction debris that would be generated during project construction would be diverted from John Smith Road Landfill through source reduction, recycling, and composting. The proposed project is a bridge replacement project and does not include uses that generate a substantial amount of solid waste during project operations. Operation of the proposed project would not increase the demand for solid waste disposal compared to baseline conditions. Therefore, the proposed project would comply with federal, State, and local

management and reduction statues and regulations related to solid waste. No impact would occur, and no mitigation is required.

Significance Determination: No Impact

Mitigation/Compliance Measures: No mitigation is required.

Significance Determination after Mitigation/Compliance: No Impact

4.20 WILDFIRE

	Potentially Significant Impact	Less Than Significant with Mitigation Incorporated	Less Than Significant Impact	No Impact
If located in or near state responsibility areas or lands classified as very high fire hazard severity zones, would the project:				
a. Substantially impair an adopted emergency response plan or emergency evacuation plan?	☐	☐	☒	☐
b. Due to slope, prevailing winds, and other factors, exacerbate wildfire risks, and thereby expose project occupants to pollutant concentrations from a wildfire or the uncontrolled spread of a wildfire?	☐	☐	☒	☐
c. Require the installation or maintenance of associated infrastructure (such as roads, fuel breaks, emergency water sources, power lines or other utilities) that may exacerbate fire risk or that may result in temporary or ongoing impacts to the environment?	☐	☐	☒	☐
d. Expose people or structures to significant risks, including downslope or downstream flooding or landslides, as a result of runoff, post-fire slope instability, or drainage changes?	☐	☐	☒	☐

CAL FIRE has mapped areas of significant fire hazards in the State through its Fire and Resources Assessment Program (FRAP). These maps place areas of California into different Fire Hazard Severity Zones (FHSZs) based on a hazard scoring system using subjective criteria for fuels, fire history, terrain influences, housing density, and occurrence of severe fire weather where urban brushfire could result in catastrophic losses. As part of this mapping system, land where CAL FIRE is responsible for wildland protection and that is generally located in unincorporated areas is classified as an SRA. Where local fire protection agencies are responsible for wildfire protection, the land is classified as a Local Responsibility Area (LRA). CAL FIRE currently identifies the project site as an SRA High FHSZ. (CAL FIRE n.d.) CAL FIRE would be responsible for wildfire attenuation within the project area.

a. Would the project substantially impair an adopted emergency response plan or emergency evacuation plan?

The proposed project is located in a rural portion of San Benito County along Panoche Road between Paicines and Llanda, California. Panoche Road is a main access road for the region, but it has not been officially designated as an emergency evacuation route by the County.

Construction of the proposed project would last approximately 13 months; during this period, temporary and intermittent transportation impacts would result from additional vehicle trips to the project site from workers and equipment deliveries. Emergency access on the road would be maintained during construction by keeping one lane open on the existing bridge. Demolition of the existing bridge would not be completed until after the proposed bridge is completed and functional. Implementation of **Mitigation Measure TR-1** would ensure that temporary impacts of project construction associated with emergency access would be less than significant by requiring the development of a TMP.

Roadway work consists of realigning the roadway downstream (southerly) of the existing bridge and would be completed to allow construction of the new bridge in one stage, and a temporary crash cushion and railing would be installed between the current construction and the temporary traffic realignment. Access to driveways off of Panoche Road would also be maintained throughout the duration of construction. After the completion of construction, emergency access on the new bridge and updated access roads would be improved compared to baseline conditions. Therefore, implementation of the proposed project would not substantially impair an adopted emergency response plan or emergency evacuation plan. This impact would be less than significant, and no mitigation is required.

Significance Determination: Potentially Significant Impact

Mitigation/Compliance Measures: Refer to **Mitigation Measure TR-1** in Section 4.17.

Significance Determination after Mitigation/Compliance: Less than Significant

b. Would the project, due to slope, prevailing winds, and other factors, exacerbate wildfire risks, and thereby expose project occupants to pollutant concentrations from a wildfire or the uncontrolled spread of a wildfire?

During project construction, BMPs would be implemented to reduce potential ignition of fires. BMPs would include installing spark arrestors on construction equipment, reducing construction activities that may create sparks during windy weather, ensuring availability of fire extinguishers on site, and ensuring staged equipment is secure. Additionally, construction activities would be monitored by the construction foreman to ensure that activities that may generate sparks are not allowed on windy days.

Upon completion of construction, the proposed project would not alter the risk or impacts of wildland fires to residences as compared to the existing conditions. The project itself would not exacerbate wildfire risks and expose project occupants to pollutant concentrations from a wildfire or the uncontrolled spread of a wildfire. Therefore, with standard conditions in place, impacts would be less than significant, and no mitigation is required.

Significance Determination: Less than Significant

Mitigation/Compliance Measures: No mitigation is required.

Significance Determination after Mitigation/Compliance: Less than Significant

c. Would the project require the installation or maintenance of associated infrastructure (such as roads, fuel breaks, emergency water sources, power lines or other utilities) that may exacerbate fire risk or that may result in temporary or ongoing impacts to the environment?

The proposed project includes the realignment of an existing access road and may require the relocation of power poles/power lines. The relocation of any power poles/power lines would occur with coordination between the construction contractor and the electricity service provider that

owns and maintains the lines. Prior to relocation, electricity on the lines would be shut off to reduce fire risk as well as electrical shock risks. The relocation area of the power lines would be cleared of tall vegetation that may come in contact with the power lines once they are charged and operational.

Implementation of the proposed project may exacerbate fire risk during construction activities; however, these would be temporary in nature and standard conditions (e.g., spark arrestors on construction equipment, fire extinguisher availability, reduction in spark-generating construction activity on windy days) would be implemented during project construction to reduce fire risk. Once operational, the project would not pose an ongoing fire risk. Therefore, the proposed project would not require the installation or maintenance of associated infrastructure that may exacerbate fire risk or that may result in temporary or ongoing impacts to the environment. This impact would be less than significant, and no mitigation is required.

Significance Determination: Less than Significant

Mitigation/Compliance Measures: No mitigation is required.

Significance Determination after Mitigation/Compliance: Less than Significant

d. Would the project expose people or structures to significant risks, including downslope or downstream flooding or landslides, as a result of runoff, post-fire slope instability, or drainage changes?

The proposed project would involve the replacement of the existing bridge and the completion of other roadway improvements. The new bridge deck would be approximately 5 to 6 ft higher to allow for adequate freeboard over 3.5 ft, which would improve drainage at the bridge and prevent potential flooding. As detailed in **Compliance Measure WQ-1**, a variety of Erosion Control BMPs would be implemented in accordance with the Construction General Permit to prevent erosion at the project site that may contribute to downstream landslides or flooding. Additionally, a retaining wall would be constructed at the cut at the hillside near the southern abutment and RSP would be installed on both sides of the creek banks to protect the abutment from hydraulic scour. These measures would prevent erosion of the creek banks during the operational period of the project after construction is complete.

Overall, the aforementioned improvements would not increase exposure of local residents and/or structures to significant risks, including downslope or downstream flooding or landslides, as a result of runoff, post-fire slope instability, or drainage changes. This impact would be less than significant, and no mitigation is required.

Significance Determination: Less than Significant

Mitigation/Compliance Measures: Refer to **Compliance Measure WQ-1** in Section 4.10.a.

Significance Determination after Mitigation/Compliance: Less than Significant

4.21 MANDATORY FINDINGS OF SIGNIFICANCE

	Potentially Significant Impact	Less Than Significant with Mitigation Incorporated	Less Than Significant Impact	No Impact
a. Does the project have the potential to substantially degrade the quality of the environment, substantially reduce the habitat of a fish or wildlife species, cause a fish or wildlife population to drop below self-sustaining levels, threaten to eliminate a plant or animal community, substantially reduce the number or restrict the range of a rare or endangered plant or animal or eliminate important examples of the major periods of California history or prehistory?	☐	☒	☐	☐
b. Does the project have impacts that are individually limited, but cumulatively considerable? ("Cumulatively considerable" means that the incremental effects of a project are considerable when viewed in connection with the effects of past projects, the effects of other current projects, and the effects of probable future projects.)	☐	☒	☐	☐
c. Does the project have environmental effects which shall cause substantial adverse effects on human beings, either directly or indirectly?	☐	☒	☐	☐

4.21.1 Environmental Setting

The Mandatory Findings of Significance section discusses the potential of the proposed project to degrade the quality of the environment and any biological habitats. Impacts on a cumulative basis are also discussed, as well as the project having any environmental impacts that would cause substantial direct or indirect adverse impacts on human beings.

4.21.2 Impact Analysis

a. Does the project have the potential to substantially degrade the quality of the environment, substantially reduce the habitat of a fish or wildlife species, cause a fish or wildlife population to drop below self-sustaining levels, threaten to eliminate a plant or animal community, substantially reduce the number or restrict the range of a rare or endangered plant or animal or eliminate important examples of the major periods of California history or prehistory?

The proposed project would include the demolition of an existing bridge over Tres Pinos Creek along Panoche Road and development of a replacement bridge. Implementation of the proposed project would have the potential to adversely impact sensitive natural communities, special-status animals, and previously undiscovered cultural resources and/or human remains. With implementation of the mitigation measures recommended in this IS/MND, compliance with County requirements, and application of compliance measures, development of the proposed project would not: (1) degrade the quality of the environment; (2) substantially reduce the habitat of fish or wildlife species; (3) cause a fish or wildlife population to drop below self-sustaining levels; (4) threaten to eliminate a plant or animal community; (5) reduce the number or restrict the range of a rare or endangered plant or animal species; or (6) eliminate important examples of the major periods of California history or prehistory.

Significance Determination: Potentially Significant Impact

Mitigation/Compliance Measures: Refer to **Mitigation Measures BIO-1 through BIO-14** in Section 4.4; **GEO-1 and GEO-2** in Section 4.7; **HAZ-1 through HAZ-7** in Section 4.9; and **TR-1** in Section 4.17, and **Compliance Measures CUL-1** in Section 4.5; **WQ-1 and WQ-2** in Section 4.10; and **NOI-1 and NOI-2** in Section 4.13.

Significance Determination after Mitigation/Compliance: Less than Significant Impact with Mitigation Incorporated

b. Does the project have impacts that are individually limited, but cumulatively considerable? ("Cumulatively considerable" means that the incremental effects of a project are considerable when viewed in connection with the effects of past projects, the effects of other current projects, and the effects of probable future projects)?

The impacts of the proposed project would be individually limited and would not be cumulatively considerable. The project is located in a rural area of San Benito County; as such, the proposed project is matching existing conditions and is localized and confined to the immediate project area. There are no other planned or reasonably foreseeable projects being developed in the immediate area that would generate an increase in cumulative impacts. The proposed project includes the demolition of an existing bridge and development of a replacement bridge over Tres Pinos Creek along Panoche Road. All environmental impacts that could occur as a result of the proposed project would be reduced to a less than significant impact level with implementation of the mitigation measures recommended throughout this environmental document. When viewed in conjunction with other related past, present, or reasonably foreseeable future projects, development of this project would not cumulatively contribute to impacts.

Significance Determination: Less than Significant Impact

Mitigation/Compliance Measures: No mitigation is required.

Significance Determination after Mitigation/Compliance: Less than Significant Impact

c. Does the project have environmental effects which shall cause substantial adverse effects on human beings, either directly or indirectly?

The purpose of the proposed project is to replace the existing bridge over Tres Pinos Creek on Panoche Road with a new longer and wider bridge on an improved roadway alignment. Once completed, the new bridge shall meet current AASHTO standards for design speed and road/bridge width. As described in this environmental document, implementation of the proposed project could result in temporary air quality, biology, cultural, GHG, hazardous waste, hydrology, and noise impacts during the construction period. Implementation of the mitigation measure recommended in this IS/MND, compliance with County regulations, and application of standard construction practices would ensure that the proposed project would not result in environmental impacts that would cause substantial direct or indirect adverse impacts on human beings.

Significance Determination: Potentially Significant Impact

Mitigation/Compliance Measures: Refer to **Mitigation Measures BIO-1 through BIO-14** in Section 4.4; **GEO-1 and GEO-2** in Section 4.7; **HAZ-1 through HAZ-7** in Section 4.9; and **TR-1** in Section 4.17, and **Compliance Measures CUL-1** in Section 4.5; **WQ-1 and WQ-2** in Section 4.10; and **NOI-1 and NOI-2** in Section 4.13.

Significance Determination after Mitigation/Compliance: Less than Significant Impact with Mitigation Incorporated

4.22 FISH AND WILDLIFE ENVIRONMENTAL DOCUMENT FEES

4.22.1 Assessment of Fee

The State Legislature, through the enactment of SB 1535, revoked the authority of Lead Agencies to determine that a project subject to CEQA review had a "*de minimis*" (minimal) effect on fish and wildlife resources under the jurisdiction of CDFW. Projects that were determined to have a *de minimis* effect were exempt from payment of the filing fees.

SB 1535 has eliminated the provision for a determination of *de minimis* effect by the Lead Agency; consequently, all land development projects that are subject to environmental review are now subject to the filing fees unless CDFW determines the project would have no effect on fish and wildlife resources.

To be considered for determination of "no effect" on fish and wildlife resources, development applicants must submit a form requesting such determination to CDFW. Forms may be obtained by contacting the agency by telephone at (916) 631-0606 or through its website at www.dfg.ca.gov.

4.22.2 Conclusion

The project would be required to pay the Fish and Wildlife Assessment fee.

4.22.3 Evidence

The project is required to pay the Fish and Wildlife Assessment fee based on the record as a whole as embodied in the Planning Department files pertaining to County Project No. 3853 and the attached IS/MND.

5.0 REFERENCES

California Department of Conservation (DOC). 2016. CGS Information Warehouse: Regulatory Maps. Website: http://maps.conservation.ca.gov/cgs/informationwarehouse/index.html?map=regulatorymaps (accessed January 23, 2017).

_____. 2022. Tsunami Inundation Maps.

California Department of Forestry and Fire Protection (CAL FIRE). FHSZ Viewer. Website: https://egis.fire.ca.gov/FHSZ/ (accessed April 29, 2022).

California Department of Water Resources. 2016. California Department of Resources Recycling and Recovery (CalRecycle). *SWIS Facility/Site Activity Details, John Smith Road Landfill (35-AA-0001)*. Website: https://www2.calrecycle.ca.gov/SolidWaste/SiteActivity/Details/2151?siteID=2583 (accessed May 2, 2022).

California Energy Commission (CEC). 2021. *2021 Integrated Energy Policy Report*. California Energy Commission. Docket Number: 21-IEPR-01.

_____. 2022. *2020 Integrated Energy Policy Report Update*. California Energy Commission. Docket Number: 22-IEPR-01.

County of San Benito (County). 2015a. *2035 San Benito County General Plan Update, State Clearinghouse #2011111016.* March 16.

_____. 2015b. *San Benito County 2035 General Plan.* July 21.

_____. San Benito County WebGIS. Website: https://gis.cosb.us/Html5Viewer_2_0/Index.html?configBase=https://gis.cosb.us/Geocortex/Essentials/REST/sites/SBC/viewers/Public/virtualdirectory/Resources/Config/Default (accessed May 2022).

East Bay Municipal Utility District Groundwater Sustainability Agency and City of Hayward Groundwater Sustainability Agency. 2021. *East Bay Plan Subbasin, Groundwater Sustainability Plan, Public Review Draft.* September 17.

EMC Planning Group Inc. 2015. *2035 San Benito County General Plan Update Revised Draft Environmental Impact Report*, Section 5.0, Aesthetics/Visual Resources. Pages 5-3 and 5-4.

_____. 2022. *2020 Integrated Energy Policy Report Update*. California Energy Commission. Docket Number: 22-IEPR-01.

Federal Highway Administration (FHWA). 1977. *An Evaluation of Expedient Methodology for Identification of Potentially Expansive Soils.* Report No. FHWA-RD-77-94. June.

Governor's Office of Planning and Research (OPR). 2018. *Technical Advisory on Evaluating Transportation Impacts in CEQA.* December. Website: https://opr.ca.gov/docs/20190122-743_Technical_Advisory.pdf (accessed April 29, 2022).

_____. 2013b. Foundation Report.

San Benito County Office of Education. Panoche School District. Website: https://www.sbcoe.k12.ca.us/District/Portal/panoche-school-district (accessed May 4, 2022).

United States Department of Agriculture (USDA). 1999. *Sorrento Series*. June. Website: https://soilseries.sc.egov.usda.gov/OSD_Docs/S/SORRENTO.html (accessed May 9, 2022).

_____. 2001. *Vallecitos Series*. March. Website: https://soilseries.sc.egov.usda.gov/OSD_Docs/V/VALLECITOS.html (accessed May 9, 2022).

United States Geological Survey (USGS). 2020. USGS National Hydrography Dataset.

6.0 MITIGATION MONITORING AND REPORTING PROGRAM

This Mitigation Monitoring and Reporting Program (MMRP) is formulated based on the findings of the IS/MND. The MMRP, which is found in Table 6.A, lists mitigation measures prescribed in the IS/MND prepared for the Panoche Road Bridge Replacement Project and identifies mitigation monitoring requirements.

This MMRP has been prepared to comply with the requirements of State law (PRC Section 21081.6). State law requires the Lead Agency to adopt an MMRP when mitigation measures are required to avoid significant impacts. The MMRP is intended to ensure compliance with the mitigation measures identified in the IS/MND during implementation of the project.

Table 6.A: Panoche Road Bridge Replacement Project Mitigation Monitoring and Reporting Program

Mitigation/ Compliance Measure	Avoidance and Minimization Measure	Timing	Implementing Party	Monitoring Party	Frequency and Duration of Monitoring	Performance Criteria
Mitigation Measure BIO-1: Nesting Cooper's Hawk and Other Migratory Birds Measures	The County of San Benito (County) or County contractor shall implement the following measures prior to construction: 1. If possible, all trees that shall be impacted by project construction shall be removed during the nonnesting season (September 16 to January 31), to avoid take of a nest or bird. If work must begin during the nesting season (February 1 to September 15), a survey for nesting Cooper's hawks and other migratory birds shall be conducted within 500 feet of the Biological Study Area (BSA) by a qualified biologist. The survey shall be conducted a maximum of 10 days prior to the start of construction. The survey area may be decreased due to property access constraints, etc. 2. If nesting Cooper's hawks or other birds are found within 500 ft of the BSA, a qualified biologist shall evaluate the potential for the proposed project to disturb nesting activities. The evaluation criteria shall include, but are not limited to, the location/orientation of the nest in the nest tree, the distance of the nest from the BSA, and line of sight between the nest and the BSA. a. The California Department of Fish and Wildlife (CDFW) and the California Department of Transportation (Caltrans) shall be contacted to review the evaluation and determine if the	Prior to Construction	Qualified biologist	County of San Benito	Prior to Construction	Successful pre-construction monitoring for migratory birds and nesting activities; avoidance of impacts to any discovered nesting sites

Table 6.A: Panoche Road Bridge Replacement Project Mitigation Monitoring and Reporting Program

<table>
<tr><th>Mitigation/ Compliance Measure</th><th>Avoidance and Minimization Measure</th><th>Timing</th><th>Implementing Party</th><th>Monitoring Party</th><th>Frequency and Duration of Monitoring</th><th>Performance Criteria</th></tr>
<tr><td></td><td>project can proceed without adversely affecting nesting activities.
b. If work is allowed to proceed, a qualified biologist shall be on site weekly during construction activities that occur during breeding season to monitor nesting activity. The biologist shall have the authority to stop work if it is determined the project is adversely affecting nesting activities.</td><td></td><td></td><td></td><td></td><td></td></tr>
<tr><td>Mitigation Measure BIO-2: Revegetation and Restoration to Preconstruction Contours</td><td>Following completion of the new bridge, the County or County contractor shall ensure all areas that are temporarily disturbed shall be restored to preconstruction contours. All disturbed areas including new fill slopes shall be revegetated with the native seed mix specified in Table 4.B.

Table 4.B: Native Species Mix
<table>
<tr><th>Scientific Name</th><th>Common Name</th><th>Rate (pounds per acre)</th><th>Minimum Percent Germination</th></tr>
<tr><td>Artemisia douglasiana</td><td>Mugwort</td><td>2.0</td><td>50</td></tr>
<tr><td>Bromus carinatus</td><td>California brome</td><td>5.0</td><td>85</td></tr>
<tr><td>Elymus trachycaulus</td><td>Slender wheatgrass</td><td>2.0</td><td>60</td></tr>
<tr><td>Eschscholzia californica</td><td>California poppy</td><td>2.0</td><td>70</td></tr>
<tr><td>Festuca microstachys</td><td>Small fescue</td><td>10.0</td><td>80</td></tr>
<tr><td>Hordeum brachyantherum</td><td>California barley</td><td>2.0</td><td>80</td></tr>
<tr><td>Lupinus bicolor</td><td>Bicolored lupine</td><td>4.0</td><td>80</td></tr>
</table></td><td>After Construction</td><td>County contractor</td><td>County of San Benito</td><td>After Construction</td><td>Restoration of disturbed areas to preconstruction contours and revegetation of disturbed areas</td></tr>
</table>

Table 6.A: Panoche Road Bridge Replacement Project Mitigation Monitoring and Reporting Program

Mitigation/ Compliance Measure	Avoidance and Minimization Measure	Timing	Implementing Party	Monitoring Party	Frequency and Duration of Monitoring	Performance Criteria
Mitigation Measure BIO-3: Special-Status Preconstruction Surveys	Prior to the start of construction, initial ground disturbance, or vegetation clearing in the Tres Pinos Creek channel or surrounding areas, a qualified biologist shall conduct a preconstruction survey of the work area for special-status species. If special-status species are found, they shall be allowed to leave the work area on their own or, if approved by the United States Fish and Wildlife Service (USFWS) and/or CDFW, the special-status species shall be relocated by the biologist to a safe place outside the work area.	Prior to and During Construction	Qualified biologist	County of San Benito	Prior to and During Construction	Completion of pre-construction surveys for special-status species; successful relocation of any discovered special-status species
Mitigation Measure BIO-4: Invasive Plant Species Measures	During final design, the County or County's engineer shall prepare specifications to avoid the introduction of invasive plant species into the BSA during project construction. At a minimum, this shall include the following measures: 1. All earthmoving equipment to be used during project construction shall be thoroughly cleaned before arriving on the project site. 2. All seeding equipment (i.e., hydroseed trucks) shall be thoroughly rinsed prior to beginning seeding work. 3. To avoid spreading any nonnative invasive species already existing on site to off-site areas, all equipment shall be thoroughly cleaned before leaving the site. 4. To avoid introducing additional nonnative species to the site, all fill dirt brought onto the site must be weed-free.	Prior to Construction	County of San Benito/County Engineer	County of San Benito	Prior to and During Construction	Successful prevention of the introduction of invasive plant species

Table 6.A: Panoche Road Bridge Replacement Project Mitigation Monitoring and Reporting Program

Mitigation/ Compliance Measure	Avoidance and Minimization Measure	Timing	Implementing Party	Monitoring Party	Frequency and Duration of Monitoring	Performance Criteria
Mitigation Measure BIO-5: California Red-Legged Frog Measures	Prior to construction, the County shall implement the following measures, which implement the provisions of the CRLF "Programmatic Biological Opinion for Projects Funded or Approved under the Federal Highway Administration's Federal Aid Program (8-8-10-F-58)": 1. Only USFWS-approved biologists shall participate in activities associated with the capture, handling, and monitoring of CRLF. Biologists authorized under this biological opinion do not need to re-submit their qualifications for subsequent projects conducted pursuant to this biological opinion, unless the USFWS has revoked their approval at any time during the life of this biological opinion. 2. Ground disturbance shall not begin until written approval is received from the USFWS that the biologist(s) is/are qualified to conduct the work, unless the individual(s) has/have been approved previously and the USFWS has not revoked that approval. 3. A USFWS-approved biologist shall survey the project site 48 hours before the onset of work activities. If any life stage of the CRLF is found and these individuals are likely to be or injured by work activities, the approved biologist shall be allowed sufficient time to move them from the site before work activities begin. The USFWS-approved biologist shall relocate the CRLF the shortest distance possible to a location that contains suitable habitat and shall not be affected by	Prior to and During Construction	County contractor/Qualified Biologist	County of San Benito	Prior to and During Construction	Successful monitoring and implementation of avoidance measures for California Red-Legged Frogs.

Table 6.A: Panoche Road Bridge Replacement Project Mitigation Monitoring and Reporting Program

Mitigation/ Compliance Measure	Avoidance and Minimization Measure	Timing	Implementing Party	Monitoring Party	Frequency and Duration of Monitoring	Performance Criteria
	activities associated with the proposed project. The relocation site should be in the same drainage to the extent practicable. Caltrans shall coordinate with the USFWS on the relocation site prior to the capture of any CRLF. The USFWS-approved biologist shall maintain detailed records of any individuals that are moved (e.g., size, coloration, any distinguishing features, photographs [digital preferred]) to assist him or her in determining whether translocated animals are returning to the original point of capture. 4. Before any activities begin on a project, a USFWS-approved biologist shall conduct a training session for all construction personnel. At a minimum, the training shall include a description of the CRLF and its habitat, the specific measures that are being implemented to conserve the CRLF for the current project, and the boundaries within which the project may be accomplished. Brochures, books, and briefings may be used in the training session, provided that a qualified person is on hand to answer any questions. 5. A USFWS-approved biologist shall be present at the work site until all CRLF have been relocated out of harm's way, workers have been instructed, and disturbance of habitat has been completed. After this time, the State or local sponsoring agency shall designate a person to monitor on-site compliance with all minimization measures. The USFWS-approved biologist shall ensure					

Table 6.A: Panoche Road Bridge Replacement Project Mitigation Monitoring and Reporting Program

Mitigation/ Compliance Measure	Avoidance and Minimization Measure	Timing	Implementing Party	Monitoring Party	Frequency and Duration of Monitoring	Performance Criteria
	that this monitor receives the training outlined in number 4 (above) and in the identification of CRLF. If the monitor or the USFWS-approved biologist recommends that work be stopped because CRLF would be affected in a manner not anticipated by the USFWS during review of the proposed action, they shall notify the resident engineer (the engineer who is directly overseeing and in command of construction activities) immediately. The resident engineer shall either resolve the situation by eliminating the effect immediately or require that all actions causing these effects be halted. If work is stopped, the USFWS shall be notified as soon as is reasonably possible. 6. During project activities, all trash that may attract predators shall be properly contained, removed from the work site, and disposed of regularly. Following construction, all trash and construction debris shall be removed from work areas. 7. All refueling, maintenance, and staging of equipment and vehicles shall occur at least 60 ft from riparian habitat or water bodies and not in a location from where a spill would drain directly toward aquatic habitat (e.g., on a slope that drains away from the water). The monitor shall ensure contamination of habitat does not occur during such operations. Prior to the onset of work, the County shall provide Caltrans with a plan for prompt and effective response to any accidental spills. All workers shall be					

Table 6.A: Panoche Road Bridge Replacement Project Mitigation Monitoring and Reporting Program

Mitigation/ Compliance Measure	Avoidance and Minimization Measure	Timing	Implementing Party	Monitoring Party	Frequency and Duration of Monitoring	Performance Criteria
	informed of the importance of preventing spills and of the appropriate measures to take should a spill occur. 8. The number of access routes, size of staging areas, and total area of the activity shall be limited to the minimum necessary to achieve the project goal. Environmentally Sensitive Areas (ESAs) shall be delineated to confine access routes and construction areas to the minimum area necessary to complete construction and minimize the impact to CRLF habitat. This goal includes locating access routes and construction areas outside of wetlands and riparian areas to the maximum extent practicable. 9. The County shall attempt to schedule work activities for times of the year when impacts to CRLF would be minimal. For example, work that would affect large pools that may support breeding would be avoided, to the maximum degree practicable, during the breeding season (November through May). Isolated pools that are important to maintain CRLF through the driest portions of the year would be avoided, to the maximum degree practicable, during the late summer and early fall. Habitat assessments, surveys, and informal consultation between Caltrans and the USFWS during project planning should be used to assist in scheduling work activities to avoid sensitive habitats during key times of the year.					

Table 6.A: Panoche Road Bridge Replacement Project Mitigation Monitoring and Reporting Program

Mitigation/ Compliance Measure	Avoidance and Minimization Measure	Timing	Implementing Party	Monitoring Party	Frequency and Duration of Monitoring	Performance Criteria
	10. If a work site is to be temporarily dewatered by pumping, intakes shall be completely screened with wire mesh not larger than 0.2 inch to prevent CRLF from entering the pump system. Water shall be released or pumped downstream at an appropriate rate to maintain downstream flows during construction. Upon completion of construction activities, any diversions or barriers to flow shall be removed in a manner that would allow flow to resume with the least disturbance to the substrate. Alteration of the stream bed shall be minimized to the maximum extent possible; any imported material shall be removed from the stream bed upon completion of the project. 11. Unless approved by the USFWS, water shall not be impounded in a manner that may attract CRLF. 12. A USFWS-approved biologist shall permanently remove any individuals of exotic species, such as bullfrogs (*Rana catesbeiana*), signal and red swamp crayfish (*Pacifasticus leniusculus*; *Procambarus clarkii*), and centrarchid fishes, from the project area to the maximum extent possible. The USFWS-approved biologist shall be responsible for ensuring his or her activities are in compliance with the California Fish and Game Code. 13. If the County demonstrates that disturbed areas have been restored to conditions that allow them to function as habitat for CRLF,					

Table 6.A: Panoche Road Bridge Replacement Project Mitigation Monitoring and Reporting Program

Mitigation/ Compliance Measure	Avoidance and Minimization Measure	Timing	Implementing Party	Monitoring Party	Frequency and Duration of Monitoring	Performance Criteria
	these areas shall not be included in the amount of total habitat permanently disturbed. 14. To ensure that diseases are not conveyed between work sites by the USFWS-approved biologists, the fieldwork code of practice developed by the Declining Amphibian Populations Task Force shall be followed at all times. 15. Project sites shall be revegetated with an assemblage of native riparian, wetland, and upland vegetation suitable for the area. Locally collected plant materials shall be used to the extent practicable. Invasive, exotic plants shall be controlled to the maximum extent practicable. This measure shall be implemented in all areas disturbed by activities associated with the project unless the USFWS determine that it is not feasible or practical. 16. The County shall not use herbicides as the primary method used to control invasive, exotic plants. However, if the County determines the use of herbicides is the only feasible method for controlling invasive plants at a specific project site, it shall implement the following additional protective measures for the CRLF: a. The County shall not use herbicides during the breeding season for CRLF. b. The County shall conduct surveys for CRLF immediately prior to the start of any					

Table 6.A: Panoche Road Bridge Replacement Project Mitigation Monitoring and Reporting Program

Mitigation/ Compliance Measure	Avoidance and Minimization Measure	Timing	Implementing Party	Monitoring Party	Frequency and Duration of Monitoring	Performance Criteria
	herbicide use. If found, CRLF shall be relocated to suitable habitat far enough from the project area that no direct contact with herbicides would occur. c. Giant reed and other invasive plants shall be cut and hauled out by hand and then painted with glyphosate or glyphosate-based products, such as Aquamaster® or Rodeo®. d. Licensed and experienced County staff or a licensed and experienced contractor shall use a hand-held sprayer for foliar application of Aquamaster® or Rodeo® where large monoculture stands occur at an individual project site. e. All precautions shall be taken to ensure that no herbicide is applied to native vegetation. f. Herbicides shall not be applied on or near open-water surfaces (no closer than 60 ft from open water). g. Foliar applications of herbicide shall not occur when wind speeds are in excess of 3 miles per hour. h. No herbicides shall be applied within 24 hours of forecasted rain. i. Application of all herbicides shall be done by qualified County staff or contractors to ensure that overspray is minimized, that all application is made in accordance with label recommendations, and that all					

Table 6.A: Panoche Road Bridge Replacement Project Mitigation Monitoring and Reporting Program

Mitigation/ Compliance Measure	Avoidance and Minimization Measure	Timing	Implementing Party	Monitoring Party	Frequency and Duration of Monitoring	Performance Criteria
	required and reasonable safety measures are implemented. A safe dye shall be added to the mixture to visually denote treated sites. Application of herbicides shall be consistent with the United States Environmental Protection Agency's Office of Pesticide Programs, Endangered Species Protection Program county bulletins. j. All herbicides, fuels, lubricants, and equipment shall be stored, poured, or refilled at least 60 ft from riparian habitat or water bodies in a location where a spill would not drain directly toward aquatic habitat. Caltrans shall ensure that contamination of habitat does not occur during such operations. Prior to the onset of work, the County shall ensure that a plan is in place for a prompt and effective response to accidental spills. All workers shall be informed of the importance of preventing spills and of the appropriate measures to take should a spill occur.					
Mitigation Measure BIO-6: Rock Slope Protection Installation	During construction, the County or County contractor shall ensure that placement of rock slope protection (RSP), native topsoil from the channel shall be incorporated within the RSP to provide a seeding and planting medium. Areas of RSP above the ordinary high water mark (OHWM) shall be revegetated with the seed mix specified in Table 4.B. In addition, locally obtained willow cuttings/poles shall be installed within the lower sections of the RSP near the OHWM.	During Construction	County Contractor	County of San Benito	During Construction	Proper placement of RSP and revegetation of disturbed areas

Table 6.A: Panoche Road Bridge Replacement Project Mitigation Monitoring and Reporting Program

Mitigation/ Compliance Measure	Avoidance and Minimization Measure	Timing	Implementing Party	Monitoring Party	Frequency and Duration of Monitoring	Performance Criteria
Mitigation Measure BIO-7: Live Channel Work Period	Work in the live channel of Tres Pinos Creek (consisting of placement of RSP, a support pier, and falsework) shall be limited to the period of June 15 through October 15. If any work within the live channel of Tres Pinos Creek is not completed by October 15, the County or County contractor shall request a written approval/ extension from the National Marine Fisheries Service (NMFS) to allow work past October 15. Revegetation activities are excluded from this requirement with the stipulation that no heavy equipment be used in the channel.	During Construction	County Contractor	County of San Benito	During Construction	Completion of work in the live channel during allowable time period
Mitigation Measure BIO-8: South Central California Coast Steelhead	During construction, the County or County contractor shall implement the following measures: 1. Prior to project implementation, a qualified biologist shall conduct a worker environmental awareness training for all construction personnel and monitoring biologists on the terms and conditions being implemented to protect SCCC steelhead during construction. The biological monitor shall have the full authority to halt work as necessary for the purpose of minimizing adverse effects on SCCC steelhead. 2. The work area for placement of the RSP, support pier, and falsework shall be dewatered prior to the start of work. Dewatering shall consist of installation of a flow diversion to separate the live channel from the area where in-stream work shall occur. The flow diversion shall consist of a corrugated metal pipe (CMP) sized to accommodate the flows expected during the	Prior to and During Construction	County Contractor/ Qualified Biologist	County of San Benito	Prior to and during Construction	Completion of appropriate monitoring and minimization measures for South Central California Coast Steelhead

Table 6.A: Panoche Road Bridge Replacement Project Mitigation Monitoring and Reporting Program

Mitigation/ Compliance Measure	Avoidance and Minimization Measure	Timing	Implementing Party	Monitoring Party	Frequency and Duration of Monitoring	Performance Criteria
	diversion period. The CMP shall be placed along the low-flow invert of the natural creek and a small earthen berm shall be installed at each end of the pipe to direct water into the pipe. Clean sand and gravel shall be used at the base of the berm to protect the existing creek channel. Both the berms and CMP shall be completely removed at the completion of project construction. A qualified biologist shall be on site during installation and removal of the flow diversion. 3. Prior to installation of the flow diversion, a qualified biologist shall determine the need for a temporary fish seine around the area to be isolated. If a seine is needed, the qualified biologist shall oversee the installation. A weighted fish seine shall be stretched across the length of the bank where work shall be conducted and shall extend a minimum of 3.3 ft beyond the upstream and downstream limits of the work. With the upstream and downstream ends of the seine remaining on the bank, the remainder of the seine shall be extended into the channel to approximately 3.3 ft beyond the limits of the area to be dewatered. The seine shall be temporarily staked into place in such a way that no fish may enter the isolated area. The purpose of this method is to direct the fish out of the area to be dewatered.					

Table 6.A: Panoche Road Bridge Replacement Project Mitigation Monitoring and Reporting Program

Mitigation/ Compliance Measure	Avoidance and Minimization Measure	Timing	Implementing Party	Monitoring Party	Frequency and Duration of Monitoring	Performance Criteria
	4. After the seine is in place, the qualified biologist shall visually survey the waters isolated behind the seine for the presence of any fish. If any fish are encountered within the isolated area, the fish seining process must be repeated until all fish are driven from the area to be isolated, as determined by the fisheries biologist. The qualified biologist shall capture any fish that remain in the areas to be dewatered. Electrofishing may be implemented to ensure that all of the fish are removed from the work area. 5. Once all of the fish have been removed from the work area, the flow diversion shall be installed in the isolated area. The qualified biologist shall be on site during installation and removal of the flow diversion. *6.* All construction shall be conducted during daylight hours.					
Mitigation Measure BIO-9: Environmentally Sensitive Area Fencing	Prior to construction activities, the qualified biologist shall identify locations for the placement of ESA fencing to protect sensitive habitat areas (i.e., jurisdictional areas, arroyo willow and mulefat riparian habitat, oak woodland habitat, the Tres Pinos Creek channel) adjacent to the construction area and to delineate a protection zone beyond which construction activities are prohibited. The construction contractor, with the assistance of the qualified biologist, shall install the ESA fencing prior to construction activities. The qualified biologist shall verify the correct placement and installation of the ESA fences before work begins in the area.	Prior to Construction	County Contractor/ Qualified Biologist	County of San Benito/ Qualified Biologist	Prior to Construction	Successful placement of ESA fencing

Table 6.A: Panoche Road Bridge Replacement Project Mitigation Monitoring and Reporting Program

Mitigation/ Compliance Measure	Avoidance and Minimization Measure	Timing	Implementing Party	Monitoring Party	Frequency and Duration of Monitoring	Performance Criteria
Mitigation Measure BIO-10: Protective Structure Use During Bridge Demolition	During demolition of the existing bridge, the County or County contractor shall ensure that a heavy tarp, temporary decking, or equivalent structure be placed beneath the bridge to collect debris falling from the bridge and prevent it from entering Tres Pinos Creek. The tarp shall be left in place until the bridge is removed. This measure may also apply during construction of the new bridge deck. This measure only applies prior to stream diversion.	During Construction	County Contractor	County of San Benito	During Construction	Successful installation of tarp or temporary decking
Mitigation Measure BIO-11: Staging, Access, and Construction Area Placement	The County shall ensure that the contractor's staging areas, access routes, and construction areas are located outside of wetland, riparian, and oak woodland areas to the maximum extent practicable.	Prior to and During Construction	County of San Benito	County of San Benito	Prior to and During Construction	Appropriate placement of staging areas, access routes, and construction areas
Mitigation Measure BIO-12: Regulatory Permits	Prior to issuance of a grading permit or other authorization to proceed with project construction, the County shall obtain any regulatory permits that are required from the United States Army Corps of Engineers (ACOE), CDFW, and/or Regional Water Quality Control Board (RWQCB).	Prior to Construction	County of San Benito/County contractor	County of San Benito	Prior to Construction	Obtainment of required regulatory permits
Mitigation Measure BIO-13: Arroyo Willow Riparian Vegetation, Mulefat Riparian Vegetation, and Mixed Oak Vegetation Compensatory Mitigation	Prior to construction, the County shall approve the compensatory habitat mitigation plan for arroyo willow riparian vegetation, mulefat riparian vegetation, and mixed oak vegetation based on the requirements of the ACOE, CDFW, and RWQCB as specified in the approved regulatory permits. Mitigation shall be accomplished using one of the following methods, or by using a combination of the methods, contingent upon approval by the ACOE, CDFW, and RWQCB:	Prior to Construction	County of San Benito/County contractor	County of San Benito	Prior to Construction	Approval of compensatory habitat mitigation plan for arroyo willow riparian vegetation, mulefat riparian vegetation, and mixed oak vegetation

Table 6.A: Panoche Road Bridge Replacement Project Mitigation Monitoring and Reporting Program

Mitigation/ Compliance Measure	Avoidance and Minimization Measure	Timing	Implementing Party	Monitoring Party	Frequency and Duration of Monitoring	Performance Criteria
	• Preservation, creation, and/or restoration of the impacted resources per permit requirements. This work would occur solely within the project impact area. • Purchase of credits at an approved mitigation bank per permit requirements.					
Mitigation Measure BIO-14: Riverine and Riverine Wetlands Compensatory Mitigation	Prior to construction, the County shall ensure that permanent impacts to riverine and riverine wetlands be mitigated using the following method, contingent upon approval by the ACOE, CDFW, and/or RWQCB: • Purchase of credits at an approved mitigation bank at a minimum 1:1 mitigation ratio.	Prior to Construction	County of San Benito	County of San Benito	Prior to Construction	Purchase of credits at an approved mitigation bank at a minimum 1:1 mitigation ratio
Mitigation Measure CUL-1: Prehistoric or Historic Archaeological Discovery Protocols	If deposits of prehistoric or historical archaeological materials are discovered during nonmonitored project activities, all work within 25 feet of the discovery shall be redirected and a qualified archaeologist contacted, if one is not present, to assess the situation, consult with the agencies as appropriate, and make recommendations for the treatment of the discovery. The Director of Planning at the San Benito County Building and Planning Department shall also be notified. Project personnel shall not collect or move any archaeological materials. Any adverse impacts to the finds shall be avoided by project activities. If avoidance is not feasible, the archaeological deposits shall be evaluated to determine if they qualify as a historical resource or unique archaeological resource, or as historic property. If the deposits do not so qualify, avoidance is not necessary. If the deposits do so qualify, adverse impacts on the deposits shall be avoided, or such impacts shall be mitigated.	During Construction	County Contractor/ Qualified Archaeologist/ County of San Benito	Qualified Archaeologist / County of San Benito	During Construction	Completion of appropriate protocol upon the discovery of any archaeological resources

Table 6.A: Panoche Road Bridge Replacement Project Mitigation Monitoring and Reporting Program

Mitigation/ Compliance Measure	Avoidance and Minimization Measure	Timing	Implementing Party	Monitoring Party	Frequency and Duration of Monitoring	Performance Criteria
	Mitigation may consist of, but is not limited to, recovery and analysis of the archaeological deposit; recording the resource; preparing a report of findings; and accessioning recovered archaeological materials at an appropriate curation facility. Educational public outreach may also be appropriate. Upon completion of the assessment, the archaeologist shall prepare a report documenting the methods and results, and provide recommendations for the treatment of the archaeological deposits discovered. The report shall be submitted to the County of San Benito for approval.					
Compliance Measure CUL-2: Discovery of Human Remains	In the event that human remains are encountered on the project site, work within 50 feet of the discovery shall be redirected and the San Benito County Coroner notified immediately, consistent with the requirements of California Code of Regulations (CCR) Section 15064.5(e). State Health and Safety Code Section 7050.5 states that no further disturbance shall occur until the County Coroner has made a determination of origin and disposition pursuant to Public Resources Code (PRC) Section 5097.98. If the remains are determined to be Native American, the County Coroner shall notify the Native American Heritage Commission (NAHC) within 24 hours, which shall determine and notify a Most Likely Descendant (MLD). With the permission of the property owner, the MLD may inspect the site of the discovery. The MLD shall complete the inspection within 48 hours of being granted access to the project site. The MLD may recommend scientific removal and	During Construction	County Contractor/ San Benito County Coroner	County of San Benito	During Construction	Completion of appropriate protocol upon the discovery of human remains

Table 6.A: Panoche Road Bridge Replacement Project Mitigation Monitoring and Reporting Program

Mitigation/ Compliance Measure	Avoidance and Minimization Measure	Timing	Implementing Party	Monitoring Party	Frequency and Duration of Monitoring	Performance Criteria
	nondestructive analysis of human remains and items associated with Native American burials.					
Mitigation Measure GEO-1: Final Geotechnical Report	During final design, a detailed geotechnical investigation shall be conducted by qualified geotechnical personnel to assess the geotechnical conditions at the project site. The geotechnical investigation shall include drilled borings and/or cone penetration tests to confirm and extend site-specific subsurface site conditions for final design. The project-specific findings and recommendations of the geotechnical investigation shall be incorporated into the final design of the proposed project and shall be summarized in the Final Geotechnical Report to be submitted to the County of San Benito for review and approval.	Prior to Construction	Qualified Geotechnical Personnel	County of San Benito	Prior to Construction	Approval of the Final Geotechnical Report
Mitigation Measure GEO-2: Paleontological Resources	In the event of an unanticipated discovery of a paleontological resource during construction, excavations within 50 feet of the find shall be temporarily halted or diverted until the discovery is examined by a qualified paleontologist (per Society of Vertebrate Paleontology standards [SVP 1995,1996]). The qualified paleontologist shall document the discovery as needed, evaluate the potential resource, and assess the significance of the find. The paleontologist shall notify the appropriate agencies to determine procedures that would be followed before construction is allowed to resume at the location of the find. If the County of San Benito (County) determines that avoidance is not feasible, the paleontologist shall prepare an excavation plan for mitigating the effect of the project on the qualities that make the resource important, and	During Construction	Qualified Paleontologist	County of San Benito	During Construction	Completion of appropriate protocol upon the discovery of any paleontological resources

Table 6.A: Panoche Road Bridge Replacement Project Mitigation Monitoring and Reporting Program

Mitigation/ Compliance Measure	Avoidance and Minimization Measure	Timing	Implementing Party	Monitoring Party	Frequency and Duration of Monitoring	Performance Criteria
	such plan shall be implemented. The plan shall be submitted to the County for review and approval.					
Mitigation Measure HAZ-1: Emergency Response and Cleanup Plan	Prior to commencement of construction activities, the construction contractor shall prepare an emergency response and cleanup plan. The construction contractor shall implement the plan during construction. The plan shall detail the methods to be used to contain and clean up a spill of petroleum products or other hazardous materials in the work area.	Prior to Construction	County Contractor	County of San Benito	Prior to Construction	Approval of emergency response and cleanup plan
Mitigation Measure HAZ-2: Construction Equipment Maintenance, Refueling, and Washing Activities	During construction, the construction contractor shall ensure that all equipment maintenance, refueling, and storage are conducted on level ground outside the Tres Pinos Creek channel, away from concentrated flows of stormwater and drainage courses. Drip pans or absorbent pads shall be used during equipment refueling and maintenance activities. Adequate quantities of absorbent spill clean-up material and spill kits shall be kept in the refueling and maintenance area and on fuel trucks. Spill clean-up and materials shall be disposed of immediately after use.	During Construction	County Contractor	County Contractor/ County of San Benito	During Construction	Proper equipment maintenance, refueling, and storage
Mitigation Measure HAZ-3: Paint Striping Protocol	During construction, if the contractor is required to remove yellow striping from existing pavement, the waste generated shall be sampled, handled, and disposed of as a hazardous waste. Processes and requirements for removal or grinding of traffic striping shall be conducted in compliance with the current (2018) California Department of Transportation Standard Special Provisions (Caltrans SSPs).	During Construction	County Contractor	County Contractor/ County of San Benito	During Construction	Completion of the proper processes and requirements for removal or grinding of traffic striping

Table 6.A: Panoche Road Bridge Replacement Project Mitigation Monitoring and Reporting Program

Mitigation/ Compliance Measure	Avoidance and Minimization Measure	Timing	Implementing Party	Monitoring Party	Frequency and Duration of Monitoring	Performance Criteria
Mitigation Measure HAZ-4: Lead Based Paint Abatement Program	During construction, the construction contractor shall comply with federal Occupational Safety and Health Administration (OSHA) Standard 1926.6 related to lead abatement, and all other applicable State and federal requirements for handling and disposal of lead-based paint (LBP), asbestos-containing materials (ACM), and universal wastes. Prior to demolition of the existing bridge, LBP and ACM surveys shall be performed by a qualified environmental professional retained by the County of San Benito (County). ACM inspections in California are required to be conducted by a Certified Asbestos Consultant (CAC) or a Certified Site Surveillance Technician (CSST) working under a CAC. The LBP inspection should be conducted by a California Department of Public Health Certified Lead Inspector/Assessor as defined in Title 17 California Code of Regulations (CCR), Division 1, Chapter 8. If any LBP or ACM is identified, it shall be abated and removed from the site in accordance with all applicable regulations, including OSHA requirements. The County shall verify that the surveys and abatement or removal, as necessary, have been completed prior to any demolition and construction activities on the project site.	During Construction	County Contractor	County Contractor/ County of San Benito	During Construction	Completion of proper surveys and requirements for handling and disposal of LBP, ACM, and universal wastes

Table 6.A: Panoche Road Bridge Replacement Project Mitigation Monitoring and Reporting Program

Mitigation/ Compliance Measure	Avoidance and Minimization Measure	Timing	Implementing Party	Monitoring Party	Frequency and Duration of Monitoring	Performance Criteria
Mitigation Measure HAZ-5: Soil Investigation	Prior to the initiation of project construction, a soil investigation shall be performed by a licensed professional to evaluate whether ADL or other potentially hazardous constituents are present in shallow soils that would be disturbed. Chemical analyses for soil shall be performed by an analytical laboratory certified by the California Department of Public Health Environmental Laboratory Accreditation Program. A licensed professional shall review the results of the soil investigation and provide recommendations on additional investigation activities, if any, and soil management recommendations shall be implemented during project construction, if applicable. The analytical results of the soil investigation shall be compared to hazardous waste criteria and health and safety thresholds for construction workers. If the analytical results exceed thresholds for construction workers, the County shall oversee that provisions for soil handling and disposal comply with the Caltrans Soil Management Agreement for Aerially Deposited Lead-Contaminated Soils.	Prior to Construction	Licensed Professional/ County of San Benito	County of San Benito	Prior to and During Construction	Completion of soil investigation and appropriate soil management recommendatio ns
Mitigation Measure HAZ-6: Risk Management Plan	Based on the results of the preconstruction soil characterization, the construction contractor shall implement a Risk Management Plan (RMP) that shall identify special soil management and disposal procedures and/or construction worker health and safety procedures to be implemented during project demolition and construction activities to reduce exposure to hazardous materials. The RMP shall include all necessary procedures to ensure that excavated soils are stored, tested, managed, and disposed of in a manner that is protective of human health and in	Prior to and During Construction	County Contractor/ County of San Benito	County of San Benito	During Construction	Approval and implementation of RMP

Table 6.A: Panoche Road Bridge Replacement Project Mitigation Monitoring and Reporting Program

Mitigation/ Compliance Measure	Avoidance and Minimization Measure	Timing	Implementing Party	Monitoring Party	Frequency and Duration of Monitoring	Performance Criteria

	accordance with applicable laws and regulations. The County shall ensure that the RMP includes available data from any pre-project construction soil sampling activities. The County shall provide the RMP to the construction contractor and ensure that the contractor follows the RMP. The RMP shall consider and include the following requirements:
	• Excavation, transportation, and placement operations shall result in no visible dust.
	• A construction "Exclusion Zone" shall be identified where hazardous materials may be stored. A temporary security fence shall be installed to surround and secure the exclusion zone.
	• Air quality shall be monitored during excavation of soils contaminated with hazardous constituents.
	• Staging of hazardous materials shall comply with the requirements in CCR Title 22, Sections 6626.250 to 66265.260.
	• If temporary stockpiling of hazardous materials is necessary, the construction contractor shall:
	  ○ Cover the stockpile with plastic sheeting or tarps;
	  ○ Install a berm around the stockpile to prevent runoff from leaving the area; and
	  ○ Locate the stockpile away from the unnamed tributary and the Tres Pinos Creek watershed area.					

Table 6.A: Panoche Road Bridge Replacement Project Mitigation Monitoring and Reporting Program

Mitigation/ Compliance Measure	Avoidance and Minimization Measure	Timing	Implementing Party	Monitoring Party	Frequency and Duration of Monitoring	Performance Criteria
Mitigation Measure HAZ-7: Fire Prevention Best Management Practices	During construction, the construction contractor shall ensure the following Best Management Practices (BMPs) to address fire prevention are implemented: installation of spark arrestors on construction equipment; storage of flammable materials in areas away from natural vegetation; limiting of construction activities that could generate sparks on windy days; posting of "No Smoking" signs in the construction area; and providing fire extinguishers in construction areas.	During Construction	County Contractor	County of San Benito	During Construction	Implementation of fire prevention BMPs
Compliance Measure WQ-1: Construction General Permit	Prior to commencement of construction activities, the proposed project shall obtain coverage under the State Water Resources Control Board (SWRCB) National Pollutant Discharge Elimination System (NPDES) General Permit for Storm Water Discharges Associated with Construction and Land Disturbance Activities (Order No. 2009-0009-DWQ, as amended by 2010-0014-DWG and 2012-0006-DWQ, NPDES No. CAS000002) (Construction General Permit) or any other subsequent permit. This shall include submission of Permit Registration Documents (PRDs), including a Notice of Intent (NOI) for coverage under the permit to the SWRCB via the Stormwater Multiple Application and Report Tracking System (SMARTS). Construction activities shall not commence until a Waste Discharge Identification Number (WDID) is obtained from SMARTS. A Storm Water Pollution Prevention Plan (SWPPP) shall be prepared and implemented to address all construction-related activities, equipment, and materials that have the potential to affect water quality. The SWPPP shall identify the sources of pollutants that may affect the quality of stormwater and include Best	Prior to Construction	County of San Benito/ Project Engineer	County of San Benito	Prior to, During, and After Construction	Preparation and implementation of SWPPP; submission of NOT

Table 6.A: Panoche Road Bridge Replacement Project Mitigation Monitoring and Reporting Program

Mitigation/ Compliance Measure	Avoidance and Minimization Measure	Timing	Implementing Party	Monitoring Party	Frequency and Duration of Monitoring	Performance Criteria
	Management Practices (BMPs) to ensure that the potential for soil erosion, sedimentation, and spills is minimized and to control the discharge of pollutants in stormwater runoff as a result of construction activities. Upon completion of construction, a Notice of Termination (NOT) shall be submitted via SMARTS.					
Compliance Measure WQ-2: Postconstruction Construction General Permit Requirements	Final design of the proposed project shall comply with the postconstruction requirements of the Construction General Permit. A Postconstruction Water Balance Calculator shall be submitted as part of the PRDs that are submitted to the SWRCB via SMARTS. In compliance with the postconstruction requirements of the Construction General Permit, the project engineers shall design the proposed project so that postconstruction runoff is equal to or less than pre-project runoff for the 85th percentile storm event or the smallest storm event that generates runoff, whichever is larger. Additionally, the project engineer shall design the proposed project to preserve the preconstruction drainage density of Tres Pinos Creek.	Prior to Construction	Project Engineers/ County of San Benito	County of San Benito	Prior to, During, and After Construction	Preparation and submission of Postconstruction Water Balance Calculator; project design in compliance with the Construction General Permit
Compliance Measure NOI-1: Construction Hours	During construction, the construction contractor shall ensure that construction activities on the project site occur Monday through Saturday between the hours of 7:00 a.m. and 7:00 p.m. to comply with construction noise exemptions set forth by San Benito County Code Chapters 19.39 and 25.37. No construction activity may occur on the project site outside of these hours, on a Sunday, or on a federal/State holiday.	During Construction	County Contractor	County of San Benito	During Construction	Compliance with applicable construction noise exemptions

Table 6.A: Panoche Road Bridge Replacement Project Mitigation Monitoring and Reporting Program

Mitigation/ Compliance Measure	Avoidance and Minimization Measure	Timing	Implementing Party	Monitoring Party	Frequency and Duration of Monitoring	Performance Criteria
Compliance Measure NOI-2: Muffler Compliance	During construction, the contractor shall equip all internal combustion engines with the manufacturer-recommended muffler and shall not operate any internal combustion engine on the job site without its appropriate muffler.	During Construction	County Contractor	County Contractor/ County of San Benito	During Construction	Installation and use of appropriate mufflers on any internal combustion engines
Mitigation Measure TR-1: Transportation Management Plan (TMP)	As part of the project final design, the County of San Benito (County), in coordination with emergency service providers and the California Department of Transportation (Caltrans), shall prepare a TMP to determine the traffic control approach (e.g., flagging and signage) and notify neighboring property owners of the lane closure. During construction, the County shall require the construction contractor to adhere to all requirements of the TMP.	Prior to Construction	County Contractor/ County of San Benito	County of San Benito	During Construction	Preparation of a TMP and adherence to all requirements

APPENDIX A

VISUAL IMPACT ASSESSMENT

This page intentionally left blank

CARLSBAD
FRESNO
IRVINE
LOS ANGELES
PALM SPRINGS
POINT RICHMOND
RIVERSIDE
ROSEVILLE
SAN LUIS OBISPO

MEMORANDUM

DATE: July 12, 2021

TO: Caltrans D5: Environmental Stewardship Branch
Kelso Vidal, Environmental Planner

FROM: Chris Graham
LSA Senior Environmental Planner

SUBJECT: Panoche Road Bridge (No. 43C0027) Replacement at Tres Pinos Creek Scenic Resources Evaluation and Visual Impact Assessment

San Benito County (County), with Federal Highway Administration (FHWA) funding, and in conjunction with the California Department of Transportation (Caltrans), proposes to replace the Panoche Road Bridge (43C-0027) over Tres Pinos Creek (herein referred to the "proposed Project" or "Project") with a longer and wider bridge (43C-0070).

The purpose of this Visual Impact Assessment Memorandum is to document potential visual impacts that may be generated due to implementation of the proposed Project. Visual impacts are demonstrated by identifying visual resources in the Project study area, measuring the amount of change that would occur as a result of the Project, and predicting how the affected public would respond to or perceive those changes. The *Questionnaire to Determine Visual Impact Assessment (VIA) Level* was prepared and the outcome indicated that a VIA Memorandum is the appropriate level of documentation for this Project.

PROJECT DESCRIPTION

The proposed Project is located on Panoche Road in a rural portion of San Benito County. The Project site is located approximately 9.5 miles east of State Route 25 and 23 miles west of Interstate 5. **Figure 1**: **Regional Location** and **Figure 2: Project Vicinity** shows the location of the proposed Project on a regional and local basis, respectively.

Actions associated with the proposed Project includes the following: existing bridge demolition; channel rock slope protection (RSP) in Tres Pinos Creek; new bridge construction; approach roadway work; metal beam guard rail installation; bridge railing installation; various construction activities; temporary traffic control during construction activities; right-of-way acquisition and temporary construction easement acquisition; and, utility relocation. The total length of the proposed Project will be approximately 685 feet, which includes approximately 550 feet of roadway work beyond the bridge abutments. The Project area will total approximately 3.2 acres.

201 Creekside Ridge Court, Suite 250, Roseville, California 95678 916.772.7450 www.lsa.net

The existing three span bridge along Panoche Road is 87 feet long, 15.75 feet wide, with non-standard bridge barriers between 27 and 32 inches in height consisting of a combination of side-mounted metal beam guard railing and steel grating. The new two-span bridge will be approximately 132 feet long with two equal spans, by 35.5 feet wide (two 12-foot wide lanes with adjacent 4-foot wide paved shoulders on each side), and will include solid concrete Manual for Assessing Safety Hardware (MASH) approved Caltrans Standard Type 836 barriers approximately 36-inches in height. A shorter length alternative crash cushion system will be installed at the northwest corner of the new bridge to maintain access to a residential gated driveway located adjacent to the Project boundary. A stream diversion will be implemented during construction of the bridge pier, as water in this section of Tres Pinos Creek generally flows year-round, fed mostly by underground springs in the summer months. The new bridge type is a cast-in-place (CIP) pre-stressed concrete slab with a structure depth of 2 feet. Bridge construction will require falsework in the Tres Pinos Creek channel spanning over the wetted creek area.

Roadway work would consist of realigning the roadway downstream (southerly) of the existing bridge to allow construction of the new bridge in one stage while maintaining traffic flow on the existing alignment during construction. The proposed shifted roadway alignment would improve roadway geometry by eliminating the slight “S” curve over the existing bridge.

Demolition of the existing bridge will require construction of a temporary decking or other system over the creek channel to avoid dropping debris into the water. The existing bridge will be removed after construction of the new bridge is completed. Scour countermeasures will be used leaving either all or a portion of the existing east abutment in place and removing the west abutment. The creek bank will be re-graded to remove a portion of the artificial fill material that was placed during construction of the existing bridge.

An unnamed tributary channel runs east to west on the west bank of Tres Pinos Creek adjacent to the existing bridge. This tributary discharges into Tres Pinos Creek. The channel currently runs between the southern edge of Panoche Road and the toe of a steep hillside adjacent to the road, past the existing east bridge abutment and into the creek. Because the alignment of the roadway is shifting to the south, this channel will be covered by the construction of the new road bed; as such, a new channel will be graded along the south edge of the realigned road. A portion of the realigned channel will be rectangular in shape, and bound between the vertical wing wall of the bridge (at the southeast corner of the bridge) and a vertical retaining wall that will retain a new cut slope in the adjacent hillside. The portion of channel realignment will be approximately 130 feet long. A retaining wall will be constructed against the hillside east of the creek and south of the roadway to minimize excavation into the hillside. The wall will allow the unnamed tributary to remain as an open channel and minimize biological impacts by allowing for wildlife passage. The wall length is estimated to be 140 feet long.

A natural spring located on the private parcel, east of the Project site, provides significant water supply for a large ranch operation. The landowner has a spring box and pump house located approximately 80 feet northeast of the Project site. Construction activities at the Project site will be monitored to avoid impacts to the property owner’s natural spring and the supplying aquifer. Rock

slope protection will be placed on the banks of Tres Pinos Creek to protect the abutment from hydraulic scour. The rock slope protection blanket will continue upstream on the east bank to mitigate for increased channel velocities (in the vicinity of the natural spring) that result from removing the existing bridge and widening the channel with the longer bridge. The rock slope protection blanket will be placed on the existing bank surface, without excavating into the bank, in order to avoid affecting the natural spring.

VISUAL SETTING

The proposed Project is located in a rural portion of San Benito County approximately 25 miles from Hollister. The Project area is mostly surrounded by open space occupied by natural vegetation; however, two rural single-family residential units on a large parcel are located east of the Project site. The Project spans over the perennial Tres Pinos Creek whose banks are occupied by natural vegetation and trees. The Project is consistent with the land uses within the Project corridor and study area. The proposed Project and adjacent land have no federal or locally designated scenic resources and Panoche Road is not designated as a Scenic Highway or Scenic Resource, nor is it located within a Scenic Corridor.

Visual sensitive receptors in the Project area include people traveling in vehicles along Panoche Road and residents at the two residential units east of the Project site.

ASSESSMENT METHODOLOGY

To determine the potential effects of the proposed Project improvements on the visual environment and sensitive receptors, photographs of the site and surrounding area were taken in April 2020 during a site visit. The site visit and representative photographs are used to establish the scenic character and quality of the Project area. **Figure 3: Representative Photographs** shows photographs of the existing conditions in the Project area.

VISUAL RESOURCE CHANGE

Review of the Project corridor and the Project design plans indicate that the new bridge would not result in substantial adverse impacts to the visual character of the Project area. Construction activities have the potential to change the visual character of the site from the perspective of sensitive receptors; however, such changes would be temporary during the construction period of the Project. Some vegetation and trees may have to be removed to accommodate development of the new bridge; however, the minimization measure discussed below will require revegetation to conserve the visual character of the site, once the Project is complete and operational. Rock slope protection will be installed within the creek bed which would change the visual characteristics of the creek bed; however, views of the creek where the rock slope will be installed will be partially obstructed with vegetation.

The Project would replace the existing Panoche Road Bridge with a new longer and wider bridge on an improved roadway alignment to improve safety and meet current American Association of State and Highway Transportation Official's standards for design speed and/or bridge width. Overall these improvements will not alter the existing visual resources of the area and is consistent with the visual

context for the area. This analysis concludes that the proposed Project will not adversely affect any designated scenic resource as defined by CEQA statutes or guidelines, or by Caltrans policy.

AVOIDANCE, MINIMIZATION, AND MITIGATION MEASURES

The proposed Project will implement the following minimization measure to ensure that revegetation of disturbed areas will occur:

- During rock slope protection (RSP) installation, native topsoil from the channel will be incorporated within the RSP to provide a seeding and planting medium. Areas of RSP above the Ordinary High Water Mark (OHWM) will be revegetated with the seed mix specified below in **Table A: Native Species Mix**. In addition, locally-obtained willow cuttings/poles will be installed within the lower sections of the RSP near the OHWM.

Table A: Native Species Mix

Scientific Name	Common Name	Rate (pounds per acre)	Minimum Percent Germination
Artemisia douglasiana	Mugwort	2.0	50
Bromus carinatus	California brome	5.0	85
Elymus trachycaulus	Slender wheatgrass	2.0	60
Eschscholzia californica	California poppy	2.0	70
Festuca mirostachys	Small fescue	10.0	80
Hordeum brachyantherum	California	2.0	80
Lupinus bicolor	Bicolored lupine	4.0	80

Source: LSA, Natural Environment Study, Panoche Road Bridge (No. 43C0027) Replacement, November 2020.

- Following completion of the new bridge, all fill slopes, temporary impact and/or otherwise disturbed areas shall be restored to preconstruction contours (as appropriate) and revegetated with the native seed mix species above in **Table A**. Invasive exotic plants shall be controlled to the maximum extent possible.

Implementation of these minimization measures will restore the visual character of the Project site (to near pre-construction conditions) once construction activities are complete and the Project is operational.

LSA Associates, Inc.

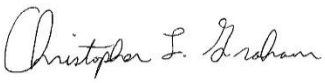

Christopher Graham
Senior Environmental Planner
Attachments:

Attachments: Figure 1: Regional Location

Figure 2: Project Vicinity and Design
Figure 3: Representative Photographs

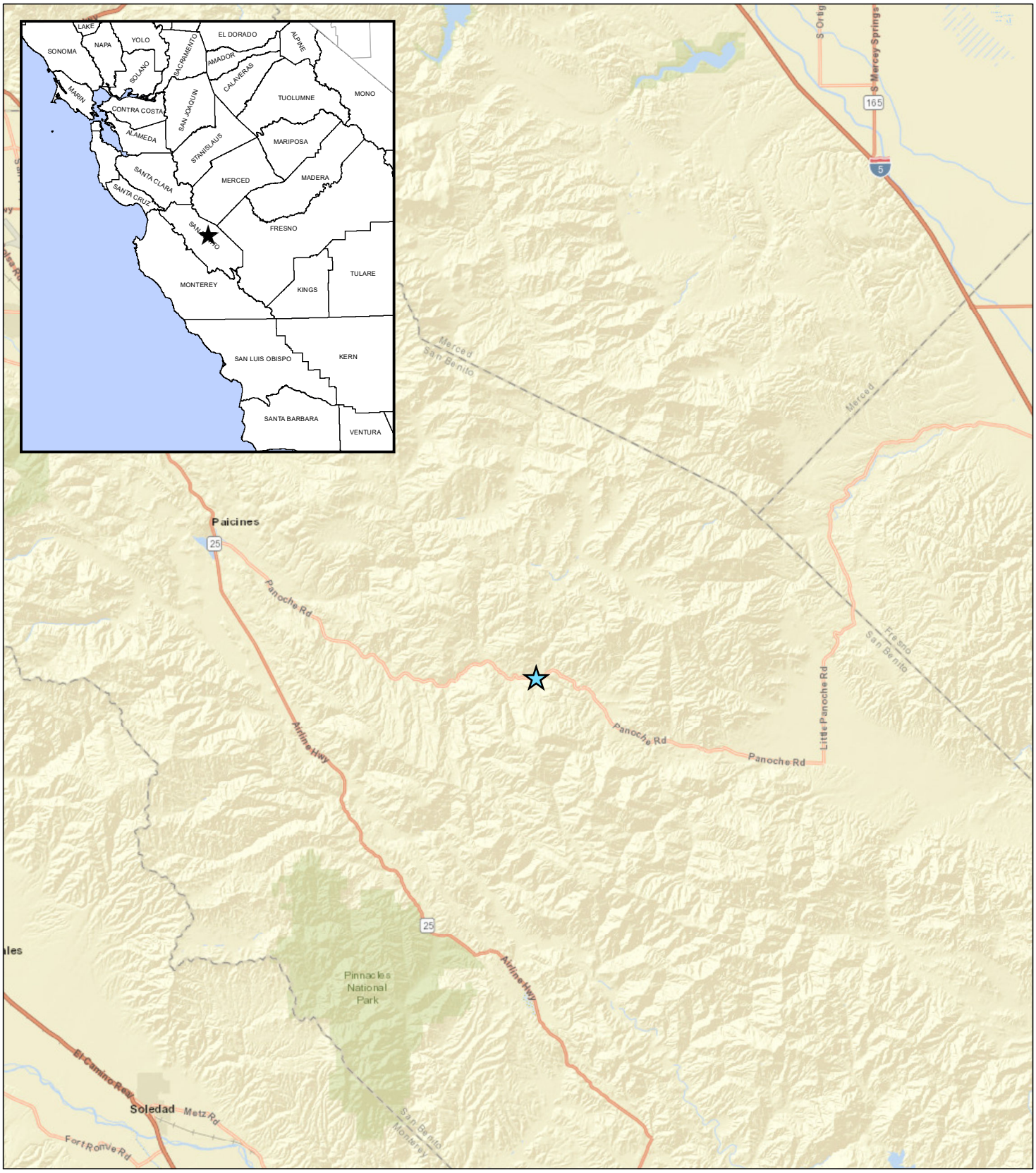

LEGEND

Project Location

FIGURE 1

Panoche Road Bridge (No. 43C0027) over
Tres Pinos Creek Replacement Project
San Benito County, California; Caltrans District 5
Federal Project No. BRLO-5943(056)

Regional Location

0 2.5 5
Miles

SOURCE: ESRI World Street Map (05/2020)

I:\QCE2001\GIS\Reports\NES\NES_Fig1_Regional_loc.mxd (10/29/2020)

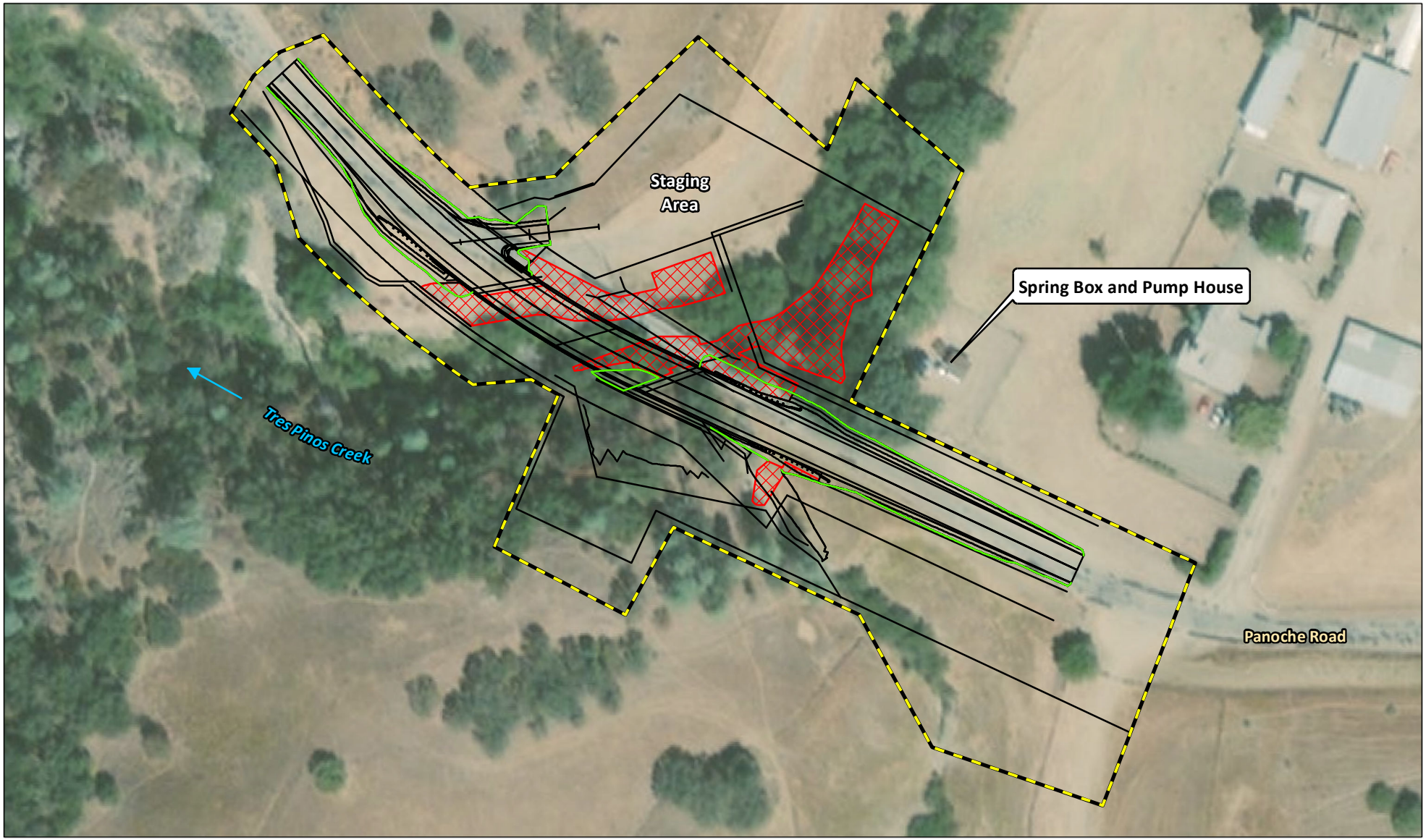

LEGEND

- Biological Study Area - (3.66 ac)
- Project Design
- Rock Slope Protection
- Cut and Fill

0 50 100
FEET

SOURCE: Basemap - ESRI World Imagery (10/2018); Design - Quincy Engineering (03/2020)

I:\QCE2001\GIS\Reports\NES\NES_Fig4_BSA_design.mxd (11/24/2020)

FIGURE 4

Panoche Road Bridge (No. 43C0027) over
Tres Pinos Creek Replacement Project
San Benito County, California; Caltrans District 5
Federal Project No. BRLO-5943(056)

Biological Study Area and Project Design

On Panoche Road, looking east toward the Project site.

On Panoche Road, looking west toward the Project site.

On parcel 0271500030, looking southwest toward the pump house and Project site.

On parcel 0271500030, looking south-southwest toward the Project site.

LSA

Figure 3

Panoche Road Bridge Replacement Project
San Benito County, California

Representative Photos

Source: LSA (4/2020)

P:\QCE2001\Tech_Reports\VIA\Figure 1.docx (04/21/20)

APPENDIX B

CALEEMOD AIR QUALITY CALCULATIONS

This page intentionally left blank

Road Construction Emissions Model
Data Entry Worksheet

Version 9.0.0

Note: Required data input sections have a yellow background.
Optional data input sections have a blue background. Only areas with a yellow or blue background can be modified. Program defaults have a white background.
The user is required to enter information in cells D10 through D24, E28 through G35, and D38 through D41 for all project types.
Please use "Clear Data Input & User Overrides" button first before changing the Project Type or begin a new project.

To begin a new project, click this button to clear data previously entered. This button will only work if you opted not to disable macros when loading this spreadsheet.

SACRAMENTO METROPOLITAN AIR QUALITY MANAGEMENT DISTRICT

Input Type

Project Name	Panoche Road Bridge	
Construction Start Year	2025	Enter a Year between 2014 and 2040 (inclusive)
Project Type	3	1) New Road Construction : Project to build a roadway from bare ground, which generally requires more site preparation than widening an existing roadway 2) Road Widening : Project to add a new lane to an existing roadway 3) Bridge/Overpass Construction : Project to build an elevated roadway, which generally requires some different equipment than a new roadway, such as a crane 4) Other Linear Project Type: Non-roadway project such as a pipeline, transmission line, or levee construction
Project Construction Time	13.00	months
Working Days per Month	22.00	days (assume 22 if unknown)
Predominant Soil/Site Type: Enter 1, 2, or 3 (for project within "Sacramento County", follow soil type selection instructions in cells E18 to E20 otherwise see instructions provided in cells J18 to J22)	1	1) Sand Gravel : Use for quaternary deposits (Delta/West County) 2) Weathered Rock-Earth : Use for Laguna formation (Jackson Highway area) or the lone formation (Scott Road, Rancho Murieta) 3) Blasted Rock : Use for Salt Springs Slate or Copper Hill Volcanics (Folsom South of Highway 50, Rancho Murieta)
Project Length	0.13	miles
Total Project Area	3.20	acres
Maximum Area Disturbed/Day	3.20	acres
Water Trucks Used?	1	1. Yes 2. No

Please note that the soil type instructions provided in cells E18 to E20 are specific to Sacramento County. Maps available from the California Geologic Survey (see weblink below) can be used to determine soil type outside Sacramento County.

http://www.conservation.ca.gov/cgs/information/geologic_mapping/Pages/googlemaps.aspx#regionalseries

Material Hauling Quantity Input

Material Type	Phase	Haul Truck Capacity (yd^3) (assume 20 if unknown)	Import Volume (yd^3/day)	Export Volume (yd^3/day)
Soil	Grubbing/Land Clearing	20.00		40.00
	Grading/Excavation			
	Drainage/Utilities/Sub-Grade			
	Paving			
Asphalt	Grubbing/Land Clearing			
	Grading/Excavation			
	Drainage/Utilities/Sub-Grade			
	Paving			

Mitigation Options

On-road Fleet Emissions Mitigation		Select "2010 and Newer On-road Vehicles Fleet" option when the on-road heavy-duty truck fleet for the project will be limited to vehicles of model year 2010 or newer
Off-road Equipment Emissions Mitigation		Select "20% NOx and 45% Exhaust PM reduction" option if the project will be required to use a lower emitting off-road construction fleet. The SMAQMD Construction Mitigation Calculator can be used to confirm compliance with this mitigation measure (http://www.airquality.org/Businesses/CEQA-Land-Use-Planning/Mitigation). Select "Tier 4 Equipment" option if some or all off-road equipment used for the project meets CARB Tier 4 Standard

The remaining sections of this sheet contain areas that can be modified by the user, although those modifications are optional.

Note: The program's estimates of construction period phase length can be overridden in cells D50 through D53, and F50 through F53.

Construction Periods	User Override of Construction Months	Program Calculated Months	User Override of Phase Starting Date	Program Default Phase Starting Date
Grubbing/Land Clearing		1.30		1/1/2025
Grading/Excavation		5.20		2/10/2025
Drainage/Utilities/Sub-Grade		4.55		7/19/2025
Paving		1.95		12/5/2025
Totals (Months)		13		

Note: Soil Hauling emission default values can be overridden in cells D61 through D64, and F61 through F64.

Soil Hauling Emissions	User Override of Miles/Round Trip	Program Estimate of Miles/Round Trip	User Override of Truck Round Trips/Day	Default Values Round Trips/Day	Calculated Daily VMT
User Input					
Miles/round trip: Grubbing/Land Clearing		30.00		2	60.00
Miles/round trip: Grading/Excavation		30.00		0	0.00
Miles/round trip: Drainage/Utilities/Sub-Grade		30.00		0	0.00
Miles/round trip: Paving		30.00		0	0.00

Emission Rates	**ROG**	**CO**	**NOx**	**PM10**	**PM2.5**	**SOx**	**CO2**	**CH4**	**N2O**	**CO2e**
Grubbing/Land Clearing (grams/mile)	0.03	0.41	3.06	0.11	0.05	0.02	1,672.88	0.00	0.26	1,751.28
Grading/Excavation (grams/mile)	0.03	0.41	3.06	0.11	0.05	0.02	1,672.88	0.00	0.26	1,751.28
Draining/Utilities/Sub-Grade (grams/mile)	0.03	0.41	3.06	0.11	0.05	0.02	1,672.88	0.00	0.26	1,751.28
Paving (grams/mile)	0.03	0.41	3.08	0.11	0.05	0.02	1,661.43	0.00	0.26	1,739.28
Grubbing/Land Clearing (grams/trip)	0.00	0.00	4.46	0.00	0.00	0.00	0.00	0.00	0.00	0.00
Grading/Excavation (grams/trip)	0.00	0.00	4.46	0.00	0.00	0.00	0.00	0.00	0.00	0.00
Draining/Utilities/Sub-Grade (grams/trip)	0.00	0.00	4.46	0.00	0.00	0.00	0.00	0.00	0.00	0.00
Paving (grams/trip)	0.00	0.00	4.46	0.00	0.00	0.00	0.00	0.00	0.00	0.00
Hauling Emissions	**ROG**	**CO**	**NOx**	**PM10**	**PM2.5**	**SOx**	**CO2**	**CH4**	**N2O**	**CO2e**
Pounds per day - Grubbing/Land Clearing	0.00	0.05	0.42	0.01	0.01	0.00	221.28	0.00	0.03	231.65
Tons per const. Period - Grubbing/Land Clearing	0.00	0.00	0.01	0.00	0.00	0.00	3.16	0.00	0.00	3.31
Pounds per day - Grading/Excavation	0.00	0.00	0.00	0.00	0.00	0.00	0.00	0.00	0.00	0.00
Tons per const. Period - Grading/Excavation	0.00	0.00	0.00	0.00	0.00	0.00	0.00	0.00	0.00	0.00
Pounds per day - Drainage/Utilities/Sub-Grade	0.00	0.00	0.00	0.00	0.00	0.00	0.00	0.00	0.00	0.00
Tons per const. Period - Drainage/Utilities/Sub-Grade	0.00	0.00	0.00	0.00	0.00	0.00	0.00	0.00	0.00	0.00
Pounds per day - Paving	0.00	0.00	0.00	0.00	0.00	0.00	0.00	0.00	0.00	0.00
Tons per const. Period - Paving	0.00	0.00	0.00	0.00	0.00	0.00	0.00	0.00	0.00	0.00
Total tons per construction project	0.00	0.00	0.01	0.00	0.00	0.00	3.16	0.00	0.00	3.31

Note: Asphalt Hauling emission default values can be overridden in cells D91 through D94, and F91 through F94.

Asphalt Hauling Emissions	User Override of Miles/Round Trip	Program Estimate of Miles/Round Trip	User Override of Truck Round Trips/Day	Default Values Round Trips/Day	Calculated Daily VMT
User Input					
Miles/round trip: Grubbing/Land Clearing		30.00		0	0.00
Miles/round trip: Grading/Excavation		30.00		0	0.00
Miles/round trip: Drainage/Utilities/Sub-Grade		30.00		0	0.00
Miles/round trip: Paving		30.00		0	0.00

Emission Rates	**ROG**	**CO**	**NOx**	**PM10**	**PM2.5**	**SOx**	**CO2**	**CH4**	**N2O**	**CO2e**
Grubbing/Land Clearing (grams/mile)	0.03	0.41	3.06	0.11	0.05	0.02	1,672.88	0.00	0.26	1,751.28
Grading/Excavation (grams/mile)	0.03	0.41	3.06	0.11	0.05	0.02	1,672.88	0.00	0.26	1,751.28
Draining/Utilities/Sub-Grade (grams/mile)	0.03	0.41	3.06	0.11	0.05	0.02	1,672.88	0.00	0.26	1,751.28
Paving (grams/mile)	0.03	0.41	3.08	0.11	0.05	0.02	1,661.43	0.00	0.26	1,739.28
Grubbing/Land Clearing (grams/trip)	0.00	0.00	4.46	0.00	0.00	0.00	0.00	0.00	0.00	0.00
Grading/Excavation (grams/trip)	0.00	0.00	4.46	0.00	0.00	0.00	0.00	0.00	0.00	0.00
Draining/Utilities/Sub-Grade (grams/trip)	0.00	0.00	4.46	0.00	0.00	0.00	0.00	0.00	0.00	0.00
Paving (grams/trip)	0.00	0.00	4.46	0.00	0.00	0.00	0.00	0.00	0.00	0.00
Emissions	**ROG**	**CO**	**NOx**	**PM10**	**PM2.5**	**SOx**	**CO2**	**CH4**	**N2O**	**CO2e**
Pounds per day - Grubbing/Land Clearing	0.00	0.00	0.00	0.00	0.00	0.00	0.00	0.00	0.00	0.00
Tons per const. Period - Grubbing/Land Clearing	0.00	0.00	0.00	0.00	0.00	0.00	0.00	0.00	0.00	0.00
Pounds per day - Grading/Excavation	0.00	0.00	0.00	0.00	0.00	0.00	0.00	0.00	0.00	0.00
Tons per const. Period - Grading/Excavation	0.00	0.00	0.00	0.00	0.00	0.00	0.00	0.00	0.00	0.00
Pounds per day - Drainage/Utilities/Sub-Grade	0.00	0.00	0.00	0.00	0.00	0.00	0.00	0.00	0.00	0.00
Tons per const. Period - Drainage/Utilities/Sub-Grade	0.00	0.00	0.00	0.00	0.00	0.00	0.00	0.00	0.00	0.00
Pounds per day - Paving	0.00	0.00	0.00	0.00	0.00	0.00	0.00	0.00	0.00	0.00
Tons per const. Period - Paving	0.00	0.00	0.00	0.00	0.00	0.00	0.00	0.00	0.00	0.00
Total tons per construction project	0.00	0.00	0.00	0.00	0.00	0.00	0.00	0.00	0.00	0.00

Note: Worker commute default values can be overridden in cells D121 through D126.

Worker Commute Emissions	User Override of Worker Commute Default Values	Default Values		
User Input				
Miles/ one-way trip		20	Calculated	Calculated
One-way trips/day		2	Daily Trips	Daily VMT
No. of employees: Grubbing/Land Clearing	10	5	20	400.00
No. of employees: Grading/Excavation	10	28	20	400.00
No. of employees: Drainage/Utilities/Sub-Grade	10	18	20	400.00
No. of employees: Paving	10	8	20	400.00

Emission Rates	**ROG**	**CO**	**NOx**	**PM10**	**PM2.5**	**SOx**	**CO2**	**CH4**	**N2O**	**CO2e**
Grubbing/Land Clearing (grams/mile)	0.01	0.78	0.06	0.05	0.02	0.00	295.84	0.00	0.01	297.52
Grading/Excavation (grams/mile)	0.01	0.78	0.06	0.05	0.02	0.00	295.84	0.00	0.01	297.52
Draining/Utilities/Sub-Grade (grams/mile)	0.01	0.78	0.06	0.05	0.02	0.00	295.84	0.00	0.01	297.52
Paving (grams/mile)	0.01	0.75	0.05	0.05	0.02	0.00	290.23	0.00	0.01	291.84
Grubbing/Land Clearing (grams/trip)	0.93	2.56	0.25	0.00	0.00	0.00	63.73	0.06	0.03	73.77
Grading/Excavation (grams/trip)	0.93	2.56	0.25	0.00	0.00	0.00	63.73	0.06	0.03	73.77
Draining/Utilities/Sub-Grade (grams/trip)	0.93	2.56	0.25	0.00	0.00	0.00	63.73	0.06	0.03	73.77
Paving (grams/trip)	0.90	2.51	0.24	0.00	0.00	0.00	62.53	0.06	0.03	72.27
Emissions	**ROG**	**CO**	**NOx**	**PM10**	**PM2.5**	**SOx**	**CO2**	**CH4**	**N2O**	**CO2e**
Pounds per day - Grubbing/Land Clearing	0.05	0.80	0.06	0.04	0.02	0.00	263.69	0.01	0.01	265.62
Tons per const. Period - Grubbing/Land Clearing	0.00	0.01	0.00	0.00	0.00	0.00	3.77	0.00	0.00	3.80
Pounds per day - Grading/Excavation	0.05	0.80	0.06	0.04	0.02	0.00	263.69	0.01	0.01	265.62
Tons per const. Period - Grading/Excavation	0.00	0.05	0.00	0.00	0.00	0.00	15.08	0.00	0.00	15.19
Pounds per day - Drainage/Utilities/Sub-Grade	0.05	0.80	0.06	0.04	0.02	0.00	263.69	0.01	0.01	265.62
Tons per const. Period - Drainage/Utilities/Sub-Grade	0.00	0.04	0.00	0.00	0.00	0.00	13.20	0.00	0.00	13.29
Pounds per day - Paving	0.05	0.77	0.06	0.04	0.02	0.00	258.69	0.00	0.01	260.55
Tons per const. Period - Paving	0.00	0.02	0.00	0.00	0.00	0.00	5.55	0.00	0.00	5.59
Total tons per construction project	0.01	0.11	0.01	0.01	0.00	0.00	37.60	0.00	0.00	37.88

Note: Water Truck default values can be overridden in cells D153 through D156, I153 through I156, and F153 through F156.

Water Truck Emissions	User Override of	Program Estimate of	User Override of Truck	Default Values	Calculated	User Override of	Default Values	Calculated

User Input	Default # Water Trucks	Number of Water Trucks	Round Trips/Vehicle/Day	Round Trips/Vehicle/Day	Trips/day	Miles/Round Trip	Miles/Round Trip	Daily VMT
Grubbing/Land Clearing - Exhaust		1		5	5		8.00	40.00
Grading/Excavation - Exhaust		1		5	5		8.00	40.00
Drainage/Utilities/Subgrade		1		5	5		8.00	40.00
Paving		1		5	5		8.00	40.00

Emission Rates	ROG	CO	NOx	PM10	PM2.5	SOx	CO2	CH4	N2O	CO2e
Grubbing/Land Clearing (grams/mile)	0.03	0.41	3.06	0.11	0.05	0.02	1,672.88	0.00	0.26	1,751.28
Grading/Excavation (grams/mile)	0.03	0.41	3.06	0.11	0.05	0.02	1,672.88	0.00	0.26	1,751.28
Draining/Utilities/Sub-Grade (grams/mile)	0.03	0.41	3.06	0.11	0.05	0.02	1,672.88	0.00	0.26	1,751.28
Paving (grams/mile)	0.03	0.41	3.08	0.11	0.05	0.02	1,661.43	0.00	0.26	1,739.28
Grubbing/Land Clearing (grams/trip)	0.00	0.00	4.46	0.00	0.00	0.00	0.00	0.00	0.00	0.00
Grading/Excavation (grams/trip)	0.00	0.00	4.46	0.00	0.00	0.00	0.00	0.00	0.00	0.00
Draining/Utilities/Sub-Grade (grams/trip)	0.00	0.00	4.46	0.00	0.00	0.00	0.00	0.00	0.00	0.00
Paving (grams/trip)	0.00	0.00	4.46	0.00	0.00	0.00	0.00	0.00	0.00	0.00
Emissions	**ROG**	**CO**	**NOx**	**PM10**	**PM2.5**	**SOx**	**CO2**	**CH4**	**N2O**	**CO2e**
Pounds per day - Grubbing/Land Clearing	0.00	0.04	0.32	0.01	0.00	0.00	147.52	0.00	0.02	154.44
Tons per const. Period - Grubbing/Land Clearing	0.00	0.00	0.00	0.00	0.00	0.00	2.11	0.00	0.00	2.21
Pounds per day - Grading/Excavation	0.00	0.04	0.32	0.01	0.00	0.00	147.52	0.00	0.02	154.44
Tons per const. Period - Grading/Excavation	0.00	0.00	0.02	0.00	0.00	0.00	8.44	0.00	0.00	8.83
Pounds per day - Drainage/Utilities/Sub-Grade	0.00	0.04	0.32	0.01	0.00	0.00	147.52	0.00	0.02	154.44
Tons per const. Period - Drainage/Utilities/Sub-Grade	0.00	0.00	0.02	0.00	0.00	0.00	7.38	0.00	0.00	7.73
Pounds per day - Paving	0.00	0.04	0.32	0.01	0.00	0.00	146.51	0.00	0.02	153.38
Tons per const. Period - Paving	0.00	0.00	0.01	0.00	0.00	0.00	3.14	0.00	0.00	3.29
Total tons per construction project	0.00	0.01	0.05	0.00	0.00	0.00	21.07	0.00	0.00	22.06

Note: Fugitive dust default values can be overridden in cells D183 through D185.

Fugitive Dust	User Override of Max Acreage Disturbed/Day	Default Maximum Acreage/Day	PM10 pounds/day	PM10 tons/per period	PM2.5 pounds/day	PM2.5 tons/per period
Fugitive Dust - Grubbing/Land Clearing		3.20	32.00	0.46	6.66	0.10
Fugitive Dust - Grading/Excavation		3.20	32.00	1.83	6.66	0.38
Fugitive Dust - Drainage/Utilities/Subgrade		3.20	32.00	1.60	6.66	0.33

Off-Road Equipment Emissions

Grubbing/Land Clearing	Default Number of Vehicles	Mitigation Option: Override of Default Equipment Tier (applicable only when "Tier 4 Mitigation" Option Selected)	Default Equipment Tier	Type	ROG	CO	NOx	PM10	PM2.5	SOx	CO2	CH4	N2O	CO2e
Override of Default Number of Vehicles	*Program-estimate*				pounds/day	pounds/day	pounds/day	pounds/day	pounds/day	pounds/day	pounds/day	pounds/day	pounds/day	pounds/day
			Model Default Tier	Aerial Lifts	0.00	0.00	0.00	0.00	0.00	0.00	0.00	0.00	0.00	0.00
			Model Default Tier	Air Compressors	0.00	0.00	0.00	0.00	0.00	0.00	0.00	0.00	0.00	0.00
			Model Default Tier	Bore/Drill Rigs	0.00	0.00	0.00	0.00	0.00	0.00	0.00	0.00	0.00	0.00
			Model Default Tier	Cement and Mortar Mixers	0.00	0.00	0.00	0.00	0.00	0.00	0.00	0.00	0.00	0.00
			Model Default Tier	Concrete/Industrial Saws	0.00	0.00	0.00	0.00	0.00	0.00	0.00	0.00	0.00	0.00
			Model Default Tier	Cranes	0.00	0.00	0.00	0.00	0.00	0.00	0.00	0.00	0.00	0.00
	1		Model Default Tier	Crawler Tractors	0.37	2.10	3.96	0.15	0.14	0.01	758.27	0.25	0.01	766.45
			Model Default Tier	Crushing/Proc. Equipment	0.00	0.00	0.00	0.00	0.00	0.00	0.00	0.00	0.00	0.00
	2		Model Default Tier	Excavators	0.33	6.52	2.44	0.12	0.11	0.01	1,000.68	0.32	0.01	1,011.46
			Model Default Tier	Forklifts	0.00	0.00	0.00	0.00	0.00	0.00	0.00	0.00	0.00	0.00
			Model Default Tier	Generator Sets	0.00	0.00	0.00	0.00	0.00	0.00	0.00	0.00	0.00	0.00
			Model Default Tier	Graders	0.00	0.00	0.00	0.00	0.00	0.00	0.00	0.00	0.00	0.00
			Model Default Tier	Off-Highway Tractors	0.00	0.00	0.00	0.00	0.00	0.00	0.00	0.00	0.00	0.00
			Model Default Tier	Off-Highway Trucks	0.00	0.00	0.00	0.00	0.00	0.00	0.00	0.00	0.00	0.00
			Model Default Tier	Other Construction Equipment	0.00	0.00	0.00	0.00	0.00	0.00	0.00	0.00	0.00	0.00
			Model Default Tier	Other General Industrial Equipn	0.00	0.00	0.00	0.00	0.00	0.00	0.00	0.00	0.00	0.00
			Model Default Tier	Other Material Handling Equiprr	0.00	0.00	0.00	0.00	0.00	0.00	0.00	0.00	0.00	0.00
			Model Default Tier	Pavers	0.00	0.00	0.00	0.00	0.00	0.00	0.00	0.00	0.00	0.00
			Model Default Tier	Paving Equipment	0.00	0.00	0.00	0.00	0.00	0.00	0.00	0.00	0.00	0.00
			Model Default Tier	Plate Compactors	0.00	0.00	0.00	0.00	0.00	0.00	0.00	0.00	0.00	0.00
			Model Default Tier	Pressure Washers	0.00	0.00	0.00	0.00	0.00	0.00	0.00	0.00	0.00	0.00
			Model Default Tier	Pumps	0.00	0.00	0.00	0.00	0.00	0.00	0.00	0.00	0.00	0.00
			Model Default Tier	Rollers	0.00	0.00	0.00	0.00	0.00	0.00	0.00	0.00	0.00	0.00
			Model Default Tier	Rough Terrain Forklifts	0.00	0.00	0.00	0.00	0.00	0.00	0.00	0.00	0.00	0.00
			Model Default Tier	Rubber Tired Dozers	0.00	0.00	0.00	0.00	0.00	0.00	0.00	0.00	0.00	0.00
			Model Default Tier	Rubber Tired Loaders	0.00	0.00	0.00	0.00	0.00	0.00	0.00	0.00	0.00	0.00
			Model Default Tier	Scrapers	0.00	0.00	0.00	0.00	0.00	0.00	0.00	0.00	0.00	0.00
	1		Model Default Tier	Signal Boards	0.06	0.30	0.36	0.01	0.01	0.00	49.31	0.01	0.00	49.56
			Model Default Tier	Skid Steer Loaders	0.00	0.00	0.00	0.00	0.00	0.00	0.00	0.00	0.00	0.00
			Model Default Tier	Surfacing Equipment	0.00	0.00	0.00	0.00	0.00	0.00	0.00	0.00	0.00	0.00
			Model Default Tier	Sweepers/Scrubbers	0.00	0.00	0.00	0.00	0.00	0.00	0.00	0.00	0.00	0.00
			Model Default Tier	Tractors/Loaders/Backhoes	0.00	0.00	0.00	0.00	0.00	0.00	0.00	0.00	0.00	0.00
			Model Default Tier	Trenchers	0.00	0.00	0.00	0.00	0.00	0.00	0.00	0.00	0.00	0.00
			Model Default Tier	Welders	0.00	0.00	0.00	0.00	0.00	0.00	0.00	0.00	0.00	0.00

User-Defined Off-road Equipment If non-default vehicles are used, please provide information in 'Non-default Off-road Equipment' tab

Number of Vehicles	Equipment Tier	Type		ROG	CO	NOx	PM10	PM2.5	SOx	CO2	CH4	N2O	CO2e
				pounds/day	pounds/day	pounds/day	pounds/day	pounds/day	pounds/day	pounds/day	pounds/day	pounds/day	pounds/day
0.00	N/A		0	0.00	0.00	0.00	0.00	0.00	0.00	0.00	0.00	0.00	0.00
0.00	N/A		0	0.00	0.00	0.00	0.00	0.00	0.00	0.00	0.00	0.00	0.00
0.00	N/A		0	0.00	0.00	0.00	0.00	0.00	0.00	0.00	0.00	0.00	0.00
0.00	N/A		0	0.00	0.00	0.00	0.00	0.00	0.00	0.00	0.00	0.00	0.00
0.00	N/A		0	0.00	0.00	0.00	0.00	0.00	0.00	0.00	0.00	0.00	0.00
0.00	N/A		0	0.00	0.00	0.00	0.00	0.00	0.00	0.00	0.00	0.00	0.00
0.00	N/A		0	0.00	0.00	0.00	0.00	0.00	0.00	0.00	0.00	0.00	0.00
	Grubbing/Land Clearing	pounds per day		0.77	8.92	6.76	0.29	0.27	0.02	1,808.26	0.57	0.02	1,827.48
	Grubbing/Land Clearing	tons per phase		0.01	0.13	0.10	0.00	0.00	0.00	25.86	0.01	0.00	26.13

Grading/Excavation	Default Number of Vehicles	Mitigation Option: Override of Default Equipment Tier (applicable only when "Tier 4 Mitigation" Option Selected)	Default Equipment Tier	Type	ROG	CO	NOx	PM10	PM2.5	SOx	CO2	CH4	N2O	CO2e
Override of Default Number of Vehicles	*Program-estimate*				pounds/day	pounds/day	pounds/day	pounds/day	pounds/day	pounds/day	pounds/day	pounds/day	pounds/day	pounds/day
			Model Default Tier	Aerial Lifts	0.00	0.00	0.00	0.00	0.00	0.00	0.00	0.00	0.00	0.00
			Model Default Tier	Air Compressors	0.00	0.00	0.00	0.00	0.00	0.00	0.00	0.00	0.00	0.00
			Model Default Tier	Bore/Drill Rigs	0.00	0.00	0.00	0.00	0.00	0.00	0.00	0.00	0.00	0.00
			Model Default Tier	Cement and Mortar Mixers	0.00	0.00	0.00	0.00	0.00	0.00	0.00	0.00	0.00	0.00
			Model Default Tier	Concrete/Industrial Saws	0.00	0.00	0.00	0.00	0.00	0.00	0.00	0.00	0.00	0.00
	1		Model Default Tier	Cranes	0.31	1.74	3.17	0.13	0.12	0.01	558.83	0.18	0.01	564.85
	2		Model Default Tier	Crawler Tractors	0.75	4.21	7.92	0.31	0.28	0.02	1,516.54	0.49	0.01	1,532.89
			Model Default Tier	Crushing/Proc. Equipment	0.00	0.00	0.00	0.00	0.00	0.00	0.00	0.00	0.00	0.00
	4		Model Default Tier	Excavators	0.67	13.04	4.89	0.24	0.22	0.02	2,001.35	0.65	0.02	2,022.93
			Model Default Tier	Forklifts	0.00	0.00	0.00	0.00	0.00	0.00	0.00	0.00	0.00	0.00
			Model Default Tier	Generator Sets	0.00	0.00	0.00	0.00	0.00	0.00	0.00	0.00	0.00	0.00
	2		Model Default Tier	Graders	0.62	3.19	6.91	0.22	0.20	0.01	1,280.48	0.41	0.01	1,294.28
			Model Default Tier	Off-Highway Tractors	0.00	0.00	0.00	0.00	0.00	0.00	0.00	0.00	0.00	0.00
			Model Default Tier	Off-Highway Trucks	0.00	0.00	0.00	0.00	0.00	0.00	0.00	0.00	0.00	0.00
			Model Default Tier	Other Construction Equipment	0.00	0.00	0.00	0.00	0.00	0.00	0.00	0.00	0.00	0.00
			Model Default Tier	Other General Industrial Equipn	0.00	0.00	0.00	0.00	0.00	0.00	0.00	0.00	0.00	0.00
			Model Default Tier	Other Material Handling Equiprr	0.00	0.00	0.00	0.00	0.00	0.00	0.00	0.00	0.00	0.00
			Model Default Tier	Pavers	0.00	0.00	0.00	0.00	0.00	0.00	0.00	0.00	0.00	0.00
			Model Default Tier	Paving Equipment	0.00	0.00	0.00	0.00	0.00	0.00	0.00	0.00	0.00	0.00
			Model Default Tier	Plate Compactors	0.00	0.00	0.00	0.00	0.00	0.00	0.00	0.00	0.00	0.00
			Model Default Tier	Pressure Washers	0.00	0.00	0.00	0.00	0.00	0.00	0.00	0.00	0.00	0.00
			Model Default Tier	Pumps	0.00	0.00	0.00	0.00	0.00	0.00	0.00	0.00	0.00	0.00
	3		Model Default Tier	Rollers	0.41	5.54	4.33	0.22	0.20	0.01	762.19	0.25	0.01	770.40
			Model Default Tier	Rough Terrain Forklifts	0.00	0.00	0.00	0.00	0.00	0.00	0.00	0.00	0.00	0.00
			Model Default Tier	Rubber Tired Dozers	0.00	0.00	0.00	0.00	0.00	0.00	0.00	0.00	0.00	0.00
	3		Model Default Tier	Rubber Tired Loaders	0.69	4.41	5.58	0.19	0.17	0.02	1,816.87	0.59	0.02	1,836.49
	4		Model Default Tier	Scrapers	2.69	21.52	25.48	1.00	0.92	0.06	5,872.59	1.90	0.05	5,935.90
	1		Model Default Tier	Signal Boards	0.06	0.30	0.36	0.01	0.01	0.00	49.31	0.01	0.00	49.56
			Model Default Tier	Skid Steer Loaders	0.00	0.00	0.00	0.00	0.00	0.00	0.00	0.00	0.00	0.00
			Model Default Tier	Surfacing Equipment	0.00	0.00	0.00	0.00	0.00	0.00	0.00	0.00	0.00	0.00
			Model Default Tier	Sweepers/Scrubbers	0.00	0.00	0.00	0.00	0.00	0.00	0.00	0.00	0.00	0.00
	2		Model Default Tier	Tractors/Loaders/Backhoes	0.26	4.46	2.67	0.11	0.10	0.01	604.11	0.20	0.01	610.61
			Model Default Tier	Trenchers	0.00	0.00	0.00	0.00	0.00	0.00	0.00	0.00	0.00	0.00
			Model Default Tier	Welders	0.00	0.00	0.00	0.00	0.00	0.00	0.00	0.00	0.00	0.00

User-Defined Off-road Equipment If non-default vehicles are used, please provide information in 'Non-default Off-road Equipment' tab

Number of Vehicles	Equipment Tier	Type		ROG	CO	NOx	PM10	PM2.5	SOx	CO2	CH4	N2O	CO2e
				pounds/day	pounds/day	pounds/day	pounds/day	pounds/day	pounds/day	pounds/day	pounds/day	pounds/day	pounds/day
0.00	N/A		0	0.00	0.00	0.00	0.00	0.00	0.00	0.00	0.00	0.00	0.00
0.00	N/A		0	0.00	0.00	0.00	0.00	0.00	0.00	0.00	0.00	0.00	0.00
0.00	N/A		0	0.00	0.00	0.00	0.00	0.00	0.00	0.00	0.00	0.00	0.00
0.00	N/A		0	0.00	0.00	0.00	0.00	0.00	0.00	0.00	0.00	0.00	0.00
0.00	N/A		0	0.00	0.00	0.00	0.00	0.00	0.00	0.00	0.00	0.00	0.00
0.00	N/A		0	0.00	0.00	0.00	0.00	0.00	0.00	0.00	0.00	0.00	0.00
0.00	N/A		0	0.00	0.00	0.00	0.00	0.00	0.00	0.00	0.00	0.00	0.00
	Grading/Excavation	pounds per day		6.46	58.41	61.30	2.44	2.24	0.15	14,462.27	4.67	0.13	14,617.90
	Grading/Excavation	tons per phase		0.37	3.34	3.51	0.14	0.13	0.01	827.24	0.27	0.01	836.14

Drainage/Utilities/Subgrade	Default Number of Vehicles	Mitigation Option: Override of Default Equipment Tier (applicable only when "Tier 4 Mitigation" Option Selected)	Default Equipment Tier		ROG	CO	NOx	PM10	PM2.5	SOx	CO2	CH4	N2O	CO2e
Override of Default Number of Vehicles	*Program-estimate*				pounds/day	pounds/day	pounds/day	pounds/day	pounds/day	pounds/day	pounds/day	pounds/day	pounds/day	pounds/day
			Model Default Tier	Aerial Lifts	0.00	0.00	0.00	0.00	0.00	0.00	0.00	0.00	0.00	0.00
	1		Model Default Tier	Air Compressors	0.23	2.41	1.53	0.07	0.07	0.00	375.26	0.02	0.00	376.62

			Model Default Tier	Bore/Drill Rigs	0.00	0.00	0.00	0.00	0.00	0.00	0.00	0.00	0.00	0.00
			Model Default Tier	Cement and Mortar Mixers	0.00	0.00	0.00	0.00	0.00	0.00	0.00	0.00	0.00	0.00
			Model Default Tier	Concrete/Industrial Saws	0.00	0.00	0.00	0.00	0.00	0.00	0.00	0.00	0.00	0.00
			Model Default Tier	Cranes	0.00	0.00	0.00	0.00	0.00	0.00	0.00	0.00	0.00	0.00
			Model Default Tier	Crawler Tractors	0.00	0.00	0.00	0.00	0.00	0.00	0.00	0.00	0.00	0.00
			Model Default Tier	Crushing/Proc. Equipment	0.00	0.00	0.00	0.00	0.00	0.00	0.00	0.00	0.00	0.00
			Model Default Tier	Excavators	0.00	0.00	0.00	0.00	0.00	0.00	0.00	0.00	0.00	0.00
			Model Default Tier	Forklifts	0.00	0.00	0.00	0.00	0.00	0.00	0.00	0.00	0.00	0.00
	1		Model Default Tier	Generator Sets	0.27	3.66	2.40	0.10	0.10	0.01	623.04	0.02	0.00	625.01
	2		Model Default Tier	Graders	0.62	3.19	6.91	0.22	0.20	0.01	1,280.48	0.41	0.01	1,294.28
			Model Default Tier	Off-Highway Tractors	0.00	0.00	0.00	0.00	0.00	0.00	0.00	0.00	0.00	0.00
			Model Default Tier	Off-Highway Trucks	0.00	0.00	0.00	0.00	0.00	0.00	0.00	0.00	0.00	0.00
			Model Default Tier	Other Construction Equipment	0.00	0.00	0.00	0.00	0.00	0.00	0.00	0.00	0.00	0.00
			Model Default Tier	Other General Industrial Equipn	0.00	0.00	0.00	0.00	0.00	0.00	0.00	0.00	0.00	0.00
			Model Default Tier	Other Material Handling Equipm	0.00	0.00	0.00	0.00	0.00	0.00	0.00	0.00	0.00	0.00
			Model Default Tier	Pavers	0.00	0.00	0.00	0.00	0.00	0.00	0.00	0.00	0.00	0.00
			Model Default Tier	Paving Equipment	0.00	0.00	0.00	0.00	0.00	0.00	0.00	0.00	0.00	0.00
	1		Model Default Tier	Plate Compactors	0.04	0.21	0.25	0.01	0.01	0.00	34.48	0.00	0.00	34.65
			Model Default Tier	Pressure Washers	0.00	0.00	0.00	0.00	0.00	0.00	0.00	0.00	0.00	0.00
	1		Model Default Tier	Pumps	0.29	3.72	2.43	0.10	0.10	0.01	623.04	0.03	0.00	625.06
			Model Default Tier	Rollers	0.00	0.00	0.00	0.00	0.00	0.00	0.00	0.00	0.00	0.00
	1		Model Default Tier	Rough Terrain Forklifts	0.10	2.29	1.28	0.04	0.03	0.00	333.72	0.11	0.00	337.31
			Model Default Tier	Rubber Tired Dozers	0.00	0.00	0.00	0.00	0.00	0.00	0.00	0.00	0.00	0.00
			Model Default Tier	Rubber Tired Loaders	0.00	0.00	0.00	0.00	0.00	0.00	0.00	0.00	0.00	0.00
	4		Model Default Tier	Scrapers	2.69	21.52	25.48	1.00	0.92	0.06	5,872.59	1.90	0.05	5,935.90
	1		Model Default Tier	Signal Boards	0.06	0.30	0.36	0.01	0.01	0.00	49.31	0.01	0.00	49.56
			Model Default Tier	Skid Steer Loaders	0.00	0.00	0.00	0.00	0.00	0.00	0.00	0.00	0.00	0.00
			Model Default Tier	Surfacing Equipment	0.00	0.00	0.00	0.00	0.00	0.00	0.00	0.00	0.00	0.00
			Model Default Tier	Sweepers/Scrubbers	0.00	0.00	0.00	0.00	0.00	0.00	0.00	0.00	0.00	0.00
	2		Model Default Tier	Tractors/Loaders/Backhoes	0.26	4.46	2.67	0.11	0.10	0.01	604.11	0.20	0.01	610.61
			Model Default Tier	Trenchers	0.00	0.00	0.00	0.00	0.00	0.00	0.00	0.00	0.00	0.00
			Model Default Tier	Welders	0.00	0.00	0.00	0.00	0.00	0.00	0.00	0.00	0.00	0.00
User-Defined Off-road Equipment		If non-default vehicles are used, please provide information in 'Non-default Off-road Equipment' tab												
Number of Vehicles		Equipment Tier		Type		ROG pounds/day	CO pounds/day	NOx pounds/day	PM10 pounds/day	PM2.5 pounds/day	SOx pounds/day	CO2 pounds/day	CH4 pounds/day	N2O pounds/day	CO2e pounds/day
0.00		N/A			0	0.00	0.00	0.00	0.00	0.00	0.00	0.00	0.00	0.00	0.00
0.00		N/A			0	0.00	0.00	0.00	0.00	0.00	0.00	0.00	0.00	0.00	0.00
0.00		N/A			0	0.00	0.00	0.00	0.00	0.00	0.00	0.00	0.00	0.00	0.00
0.00		N/A			0	0.00	0.00	0.00	0.00	0.00	0.00	0.00	0.00	0.00	0.00
0.00		N/A			0	0.00	0.00	0.00	0.00	0.00	0.00	0.00	0.00	0.00	0.00
0.00		N/A			0	0.00	0.00	0.00	0.00	0.00	0.00	0.00	0.00	0.00	0.00
0.00		N/A			0	0.00	0.00	0.00	0.00	0.00	0.00	0.00	0.00	0.00	0.00
	Drainage/Utilities/Sub-Grade			pounds per day		4.55	41.75	43.31	1.66	1.55	0.10	9,796.03	2.69	0.09	9,889.00
	Drainage/Utilities/Sub-Grade			tons per phase		0.23	2.09	2.17	0.08	0.08	0.01	490.29	0.13	0.00	494.94

Paving	Default Number of Vehicles	Mitigation Option Override of Default Equipment Tier (applicable only when "Tier 4 Mitigation" Option Selected)	Default Equipment Tier	Type	ROG	CO	NOx	PM10	PM2.5	SOx	CO2	CH4	N2O	CO2e
Override of Default Number of Vehicles	*Program-estimate*				pounds/day	pounds/day	pounds/day	pounds/day	pounds/day	pounds/day	pounds/day	pounds/day	pounds/day	pounds/day
			Model Default Tier	Aerial Lifts	0.00	0.00	0.00	0.00	0.00	0.00	0.00	0.00	0.00	0.00
			Model Default Tier	Air Compressors	0.00	0.00	0.00	0.00	0.00	0.00	0.00	0.00	0.00	0.00
			Model Default Tier	Bore/Drill Rigs	0.00	0.00	0.00	0.00	0.00	0.00	0.00	0.00	0.00	0.00
			Model Default Tier	Cement and Mortar Mixers	0.00	0.00	0.00	0.00	0.00	0.00	0.00	0.00	0.00	0.00
			Model Default Tier	Concrete/Industrial Saws	0.00	0.00	0.00	0.00	0.00	0.00	0.00	0.00	0.00	0.00
			Model Default Tier	Cranes	0.00	0.00	0.00	0.00	0.00	0.00	0.00	0.00	0.00	0.00
			Model Default Tier	Crawler Tractors	0.00	0.00	0.00	0.00	0.00	0.00	0.00	0.00	0.00	0.00
			Model Default Tier	Crushing/Proc. Equipment	0.00	0.00	0.00	0.00	0.00	0.00	0.00	0.00	0.00	0.00
			Model Default Tier	Excavators	0.00	0.00	0.00	0.00	0.00	0.00	0.00	0.00	0.00	0.00
			Model Default Tier	Forklifts	0.00	0.00	0.00	0.00	0.00	0.00	0.00	0.00	0.00	0.00
			Model Default Tier	Generator Sets	0.00	0.00	0.00	0.00	0.00	0.00	0.00	0.00	0.00	0.00
			Model Default Tier	Graders	0.00	0.00	0.00	0.00	0.00	0.00	0.00	0.00	0.00	0.00
			Model Default Tier	Off-Highway Tractors	0.00	0.00	0.00	0.00	0.00	0.00	0.00	0.00	0.00	0.00
			Model Default Tier	Off-Highway Trucks	0.00	0.00	0.00	0.00	0.00	0.00	0.00	0.00	0.00	0.00
			Model Default Tier	Other Construction Equipment	0.00	0.00	0.00	0.00	0.00	0.00	0.00	0.00	0.00	0.00
			Model Default Tier	Other General Industrial Equipn	0.00	0.00	0.00	0.00	0.00	0.00	0.00	0.00	0.00	0.00
			Model Default Tier	Other Material Handling Equipm	0.00	0.00	0.00	0.00	0.00	0.00	0.00	0.00	0.00	0.00
	1		Model Default Tier	Pavers	0.17	2.90	1.58	0.07	0.07	0.00	454.99	0.15	0.00	459.90
	1		Model Default Tier	Paving Equipment	0.15	2.55	1.26	0.06	0.06	0.00	394.32	0.13	0.00	398.57
			Model Default Tier	Plate Compactors	0.00	0.00	0.00	0.00	0.00	0.00	0.00	0.00	0.00	0.00
			Model Default Tier	Pressure Washers	0.00	0.00	0.00	0.00	0.00	0.00	0.00	0.00	0.00	0.00
			Model Default Tier	Pumps	0.00	0.00	0.00	0.00	0.00	0.00	0.00	0.00	0.00	0.00
	1		Model Default Tier	Rollers	0.14	1.85	1.44	0.07	0.07	0.00	254.06	0.08	0.00	256.80
			Model Default Tier	Rough Terrain Forklifts	0.00	0.00	0.00	0.00	0.00	0.00	0.00	0.00	0.00	0.00
			Model Default Tier	Rubber Tired Dozers	0.00	0.00	0.00	0.00	0.00	0.00	0.00	0.00	0.00	0.00
			Model Default Tier	Rubber Tired Loaders	0.00	0.00	0.00	0.00	0.00	0.00	0.00	0.00	0.00	0.00
			Model Default Tier	Scrapers	0.00	0.00	0.00	0.00	0.00	0.00	0.00	0.00	0.00	0.00
	1		Model Default Tier	Signal Boards	0.06	0.30	0.36	0.01	0.01	0.00	49.31	0.01	0.00	49.56
			Model Default Tier	Skid Steer Loaders	0.00	0.00	0.00	0.00	0.00	0.00	0.00	0.00	0.00	0.00
			Model Default Tier	Surfacing Equipment	0.00	0.00	0.00	0.00	0.00	0.00	0.00	0.00	0.00	0.00
			Model Default Tier	Sweepers/Scrubbers	0.00	0.00	0.00	0.00	0.00	0.00	0.00	0.00	0.00	0.00
	2		Model Default Tier	Tractors/Loaders/Backhoes	0.26	4.46	2.67	0.11	0.10	0.01	604.11	0.20	0.01	610.61
			Model Default Tier	Trenchers	0.00	0.00	0.00	0.00	0.00	0.00	0.00	0.00	0.00	0.00
			Model Default Tier	Welders	0.00	0.00	0.00	0.00	0.00	0.00	0.00	0.00	0.00	0.00
User-Defined Off-road Equipment		If non-default vehicles are used, please provide information in 'Non-default Off-road Equipment' tab												
Number of Vehicles		Equipment Tier		Type		ROG pounds/day	CO pounds/day	NOx pounds/day	PM10 pounds/day	PM2.5 pounds/day	SOx pounds/day	CO2 pounds/day	CH4 pounds/day	N2O pounds/day	CO2e pounds/day
0.00		N/A			0	0.00	0.00	0.00	0.00	0.00	0.00	0.00	0.00	0.00	0.00
0.00		N/A			0	0.00	0.00	0.00	0.00	0.00	0.00	0.00	0.00	0.00	0.00
0.00		N/A			0	0.00	0.00	0.00	0.00	0.00	0.00	0.00	0.00	0.00	0.00
0.00		N/A			0	0.00	0.00	0.00	0.00	0.00	0.00	0.00	0.00	0.00	0.00
0.00		N/A			0	0.00	0.00	0.00	0.00	0.00	0.00	0.00	0.00	0.00	0.00
0.00		N/A			0	0.00	0.00	0.00	0.00	0.00	0.00	0.00	0.00	0.00	0.00
0.00		N/A			0	0.00	0.00	0.00	0.00	0.00	0.00	0.00	0.00	0.00	0.00
	Paving			pounds per day		0.78	12.05	7.32	0.33	0.31	0.02	1,756.80	0.56	0.02	1,775.45
	Paving			tons per phase		0.02	0.26	0.16	0.01	0.01	0.00	37.68	0.01	0.00	38.08
Total Emissions all Phases (tons per construction period) =>						0.62	5.82	5.93	0.23	0.22	0.01	1,381.07	0.42	0.01	1,395.30

Equipment default values for horsepower and hours/day can be overridden in cells D403 through D436 and F403 through F436.

Equipment	User Override of Horsepower	Default Values Horsepower	User Override of Hours/day	Default Values Hours/day
Aerial Lifts		63		8
Air Compressors		78		8
Bore/Drill Rigs		221		8
Cement and Mortar Mixers		9		8
Concrete/Industrial Saws		81		8
Cranes		231		8
Crawler Tractors		212		8
Crushing/Proc. Equipment		85		8
Excavators		158		8
Forklifts		89		8
Generator Sets		84		8
Graders		187		8
Off-Highway Tractors		124		8
Off-Highway Trucks		402		8
Other Construction Equipment		172		8
Other General Industrial Equipment		88		8
Other Material Handling Equipment		168		8
Pavers		130		8
Paving Equipment		132		8
Plate Compactors		8		8
Pressure Washers		13		8
Pumps		84		8
Rollers		80		8
Rough Terrain Forklifts		100		8
Rubber Tired Dozers		247		8
Rubber Tired Loaders		203		8
Scrapers		367		8
Signal Boards		6		8
Skid Steer Loaders		65		8
Surfacing Equipment		263		8
Sweepers/Scrubbers		64		8
Tractors/Loaders/Backhoes		97		8
Trenchers		78		8
Welders		46		8

END OF DATA ENTRY SHEET

Road Construction Emissions Model, Version 9.0.0

Daily Emission Estimates for -> Panoche Road Bridge Project Phases (Pounds)	ROG (lbs/day)	CO (lbs/day)	NOx (lbs/day)	Total PM10 (lbs/day)	Exhaust PM10 (lbs/day)	Fugitive Dust PM10 (lbs/day)	Total PM2.5 (lbs/day)	Exhaust PM2.5 (lbs/day)	Fugitive Dust PM2.5 (lbs/day)	SOx (lbs/day)	CO2 (lbs/day)	CH4 (lbs/day)	N2O (lbs/day)	CO2e (lbs/day)
Grubbing/Land Clearing	0.82	9.81	7.56	32.35	0.35	32.00	6.95	0.29	6.66	0.03	2,440.76	0.58	0.08	2,479.19
Grading/Excavation	6.51	59.24	61.68	34.49	2.49	32.00	8.92	2.26	6.66	0.15	14,873.49	4.67	0.16	15,037.96
Drainage/Utilities/Sub-Grade	4.60	42.59	43.69	33.71	1.71	32.00	8.23	1.57	6.66	0.11	10,207.25	2.70	0.12	10,309.06
Paving	0.83	12.85	7.70	0.38	0.38	0.00	0.33	0.33	0.00	0.02	2,162.01	0.56	0.04	2,189.37
Maximum (pounds/day)	6.51	59.24	61.68	34.49	2.49	32.00	8.92	2.26	6.66	0.15	14,873.49	4.67	0.16	15,037.96
Total (tons/construction project)	0.63	5.94	5.99	4.13	0.24	3.89	1.03	0.22	0.81	0.01	1,442.91	0.42	0.02	1,458.55

Notes:	
Project Start Year ->	2025
Project Length (months) ->	13
Total Project Area (acres) ->	3
Maximum Area Disturbed/Day (acres) ->	3
Water Truck Used? ->	Yes

	Total Material Imported/Exported Volume (yd^3/day)		Daily VMT (miles/day)			
Phase	Soil	Asphalt	Soil Hauling	Asphalt Hauling	Worker Commute	Water Truck
Grubbing/Land Clearing	40	0	60	0	400	40
Grading/Excavation	0	0	0	0	400	40
Drainage/Utilities/Sub-Grade	0	0	0	0	400	40
Paving	0	0	0	0	400	40

PM10 and PM2.5 estimates assume 50% control of fugitive dust from watering and associated dust control measures if a minimum number of water trucks are specified.

Total PM10 emissions shown in column F are the sum of exhaust and fugitive dust emissions shown in columns G and H. Total PM2.5 emissions shown in Column I are the sum of exhaust and fugitive dust emissions shown in columns J and K.

CO2e emissions are estimated by multiplying mass emissions for each GHG by its global warming potential (GWP), 1 , 25 and 298 for CO2, CH4 and N2O, respectively. Total CO2e is then estimated by summing CO2e estimates over all GHGs.

Total Emission Estimates by Phase for -> Panoche Road Bridge Project Phases (Tons for all except CO2e. Metric tonnes for CO2e)	ROG (tons/phase)	CO (tons/phase)	NOx (tons/phase)	Total PM10 (tons/phase)	Exhaust PM10 (tons/phase)	Fugitive Dust PM10 (tons/phase)	Total PM2.5 (tons/phase)	Exhaust PM2.5 (tons/phase)	Fugitive Dust PM2.5 (tons/phase)	SOx (tons/phase)	CO2 (tons/phase)	CH4 (tons/phase)	N2O (tons/phase)	CO2e (MT/phase)
Grubbing/Land Clearing	0.01	0.14	0.11	0.46	0.01	0.46	0.10	0.00	0.10	0.00	34.90	0.01	0.00	32.16
Grading/Excavation	0.37	3.39	3.53	1.97	0.14	1.83	0.51	0.13	0.38	0.01	850.76	0.27	0.01	780.34
Drainage/Utilities/Sub-Grade	0.23	2.13	2.19	1.69	0.09	1.60	0.41	0.08	0.33	0.01	510.87	0.14	0.01	468.08
Paving	0.02	0.28	0.17	0.01	0.01	0.00	0.01	0.01	0.00	0.00	46.38	0.01	0.00	42.60
Maximum (tons/phase)	0.37	3.39	3.53	1.97	0.14	1.83	0.51	0.13	0.38	0.01	850.76	0.27	0.01	780.34
Total (tons/construction project)	0.63	5.94	5.99	4.13	0.24	3.89	1.03	0.22	0.81	0.01	1442.91	0.42	0.02	1,323.19

PM10 and PM2.5 estimates assume 50% control of fugitive dust from watering and associated dust control measures if a minimum number of water trucks are specified.

Total PM10 emissions shown in column F are the sum of exhaust and fugitive dust emissions shown in columns G and H. Total PM2.5 emissions shown in Column I are the sum of exhaust and fugitive dust emissions shown in columns J and K.

CO2e emissions are estimated by multiplying mass emissions for each GHG by its global warming potential (GWP), 1 , 25 and 298 for CO2, CH4 and N2O, respectively. Total CO2e is then estimated by summing CO2e estimates over all GHGs.

The CO2e emissions are reported as metric tons per phase.

APPENDIX C

NATURAL ENVIRONMENTAL STUDY (NES) AND BIOLOGICAL ASSESSMENT (BA)

This page intentionally left blank

Natural Environment Study

Panoche Road Bridge (No. 43C0027) Replacement at Tres Pinos Creek

San Benito County, California

05-SBT-0-CR

Federal Project No. BRLO-5943 (056)

September 2021

CALIFORNIA DEPARTMENT OF TRANSPORTATION

Natural Environment Study

Panoche Road Bridge (No. 43C0027) Replacement at Tres Pinos Creek

San Benito County, California

05-SBT-0-CR

Federal Project No. BRLO-5943 (056)

September 2021

STATE OF CALIFORNIA

Department of Transportation

San Benito County Department of Public Works

Prepared By: _____ Date: 9-24-2021

Anna Van Zuuk, Biologist/Botanist
(916) 844-2983
LSA Associates, Inc.

Approved By: _____ Date: _____

Steve Loupe, County Engineer
(831) 902-2271
San Benito County Department of Public Works
2301 Technology Parkway, Hollister, CA 95023

Approved By: _____ Date: _____

Paul Holmes, Biologist
(805) 549-3811
California Department of Transportation, District 5

Approved By: _____ Date: _____

Randy LaVack, Branch Chief
(805) 549-3182
California Department of Transportation, District 5

Summary

San Benito County (County), with Federal Highway Administration (FHWA) funding, and in conjunction with the California Department of Transportation (Caltrans), proposes to replace the Panoche Road Bridge (No. 43C0027) over Tres Pinos Creek with a longer and wider bridge (No. 43C0070). The bridge is located in a rural area approximately 25 miles (mi) southeast of Hollister.

The existing one-lane bridge does not meet current design standards for minimum design speed or width. The purpose of the proposed project is to replace the existing bridge with a longer, wider structure, and to shift the location of the new bridge to match a straightened roadway alignment. The new bridge will provide two 12-foot (ft) traffic lanes with adjacent 4-ft shoulders meeting current design standards.

Activities associated with the proposed Project would include: existing bridge demolition; channel rock slope protection (RSP); approach roadway work; new bridge construction; metal beam guard rail installation; bridge railing installation; temporary traffic control during construction; right-of-way acquisition and temporary construction easements; and utility relocation.

Work will be required in the live channel of Tres Pinos Creek during project construction and will include construction of a support pier, placement of rock slope protection (RSP), installation of temporary falsework, and removal of the existing bridge structure. To conduct these activities, a flow diversion (dewatering) will be required. Dewatering will consist of a corrugated metal pipe (CMP) appropriately sized for expected flows to direct the flow of water through the project work area. The CMP will be placed along the low-flow invert of the natural creek and a small earthen berm will be installed at each end of the pipe to direct water into the pipe. Clean sand and gravel will be used at the base of the berm to protect the existing creek channel. Both berms and CMP will be completely removed at the completion of project construction.

Project construction, including removal of the existing bridge and construction of the new bridge, will last for two construction seasons. Work within the live channel of Tres Pinos Creek will be limited to the period of June 15 through October 15.

The Biological Study Area (BSA) defined for the project comprises 3.66 acres (ac). Undeveloped natural areas within the BSA consist of Tres Pinos Creek, its associated riparian corridor, and outlying areas. Natural lands in the BSA include: California annual grassland series, arroyo willow series, mixed oak series, mulefat series, riverine, and riverine wetlands. Natural communities within the BSA total 3.02 ac. One other vegetation community not considered natural is also present: pasture, totaling 0.01 ac. The remainder of the BSA, totaling 0.63 ac, consists of developed areas. The area in which the BSA lies is mainly privately owned and undeveloped; developed areas consist of roads, a concrete low water crossing, and part of a rural residence.

Approximately 0.64 ac of California annual grassland series, arroyo willow series, mixed oak series, mulefat series, riverine, and riverine wetland vegetation will be

permanently impacted; temporary impacts to these same vegetation communities total approximately 0.76 ac.

Special status wildlife species that may occur in the BSA include Cooper's hawk, western burrowing owl, prairie falcon, Pacific pond turtle, San Joaquin whipsnake, coast horned lizard, California red-legged frog (CRLF), and South Central California Coast steelhead (SCCC steelhead). Nesting birds are also likely to be present on or under the bridge, or in vegetation within the BSA.

Several of the species listed above are federally listed species under the Federal Endangered Species Act (FESA). The proposed project may affect, and is likely to adversely affect, CRLF and SCCC steelhead; both species are listed as threatened under FESA. A Biological Assessment will be submitted to both the Unites States Fish and Wildlife Service and the National Marine Fisheries Service in support of consultation pursuant to Section 7 of FESA. It is anticipated that both agencies will concur with the above determinations and, with incorporation of the proposed avoidance and minimization efforts, the project will not jeopardize the continued existence of these species.

The project will result in minor permanent and temporary impacts to riparian, wetland, and aquatic habitat. The proposed project includes numerous avoidance and minimization measures for special status species and habitats to reduce the potential for adverse effects.

The project is likely to require an Army Corps of Engineers Nationwide Permit, a California Department of Fish and Wildlife Lake and Streambed Alteration Agreement, and a Water Quality Certification from the Regional Water Quality Control Board.

Table of Contents

Summary ... iii
Table of Contents ... v
List of Figures ... vii
List of Tables ... vii
List of Abbreviated Terms ... viii
Chapter 1. Introduction ... 1
1.1. Project History ... 1
1.2. Project Description ... 5
Chapter 2. Study Methods ... 9
2.1. Regulatory Requirements ... 9
2.1.1. Special Status Species ... 9
2.1.2. Waters of the United States and Other Jurisdictional Waters ... 11
2.1.3. Migratory Bird Treaty Act ... 13
2.1.4. California Fish and Game Code (Breeding Birds) ... 14
2.1.5. California Public Resources Code 21083.4: Impacts to Oak Woodlands. ... 14
2.1.6. Executive Order 13112: Invasive Species ... 14
2.2. Studies Required ... 14
2.2.1. Literature Review ... 15
2.2.2. Field Surveys ... 16
2.3. Personnel and Survey Dates ... 18
2.4. Agency Coordination and Professional Contacts ... 18
2.5. Limitations That May Influence Results ... 19
Chapter 3. Results: Environmental Setting ... 20
3.1. Description of the Existing Physical and Biological Conditions ... 20
3.1.1. Biological Study Area ... 20
3.1.2. Physical Conditions ... 20
3.1.3. Biological Conditions in the Biological Study Area ... 21
3.2. Regional Species and Habitats of Concern ... 29
Chapter 4. Results: Biological Resources, Discussion of Impacts and Mitigation ... 43
4.1. Habitats and Natural Communities of Special Concern ... 43
4.1.1. Arroyo Willow Series ... 44
4.1.2. Mulefat Series ... 48
4.1.3. Riverine ... 49
4.1.4. Riverine Wetlands ... 50
4.1.5. Mixed Oak Series ... 51
4.2. Special Status Plant Species ... 52
4.3. Special Status Animal Species Occurrences ... 53
4.3.1. Cooper's Hawk ... 53
4.3.2. Western Burrowing Owl ... 55
4.3.3. Prairie Falcon ... 56
4.3.4. Pacific Pond Turtle ... 57
4.3.5. San Joaquin Whipsnake ... 59
4.3.6. Coast Horned Lizard ... 61
4.3.7. California Red-Legged Frog ... 62
4.3.8. South Central California Coast Steelhead ... 72
Chapter 5. Results: Permits and Technical Studies for Special Laws or Conditions ... 78
5.1. Federal Endangered Species Act Consultation Summary ... 78
5.2. Federal Fisheries and Essential Fish Habitat Consultation Summary ... 79

5.3. California Endangered Species Act Consultation Summary 79
5.4. Wetlands and Other Waters Coordination Summary 79
5.4.1. Army Corps of Engineers 79
5.4.2. Regional Water Quality Control Board 80
5.4.3. California Department of Fish and Wildlife 80
5.4.4. Executive Order 11990 – Protection of Wetlands 80
5.5. Migratory Bird Treaty Act and California Fish and Game Code (Breeding Birds) 81
5.6. Impacts to Oak Woodlands 81
5.7. Executive Order 13112 – Invasive Species 82
Chapter 6. References 83
Appendix A Design Plans
Appendix B USFWS, CNDDB, CNPS, and NMFS Lists
Appendix C Wetland Data Sheets
Appendix D Site Assessment for CTS and CRLF
Appendix E Agency Coordination Documentation
Appendix F Representative Photos
Appendix G Hydraulic Analysis

List of Figures

Figure 1: Regional Location 2
Figure 2: Biological Study Area on Topographic Base 3
Figure 3: Biological Study Area on Aerial Base 4
Figure 4: Biological Study Area and Project Design 8
Figure 5: Natural Communities/Land Uses 22
Figure 6: Potential Jurisdictional Waters 28
Figure 7: Project Impacts and ESA Fencing 45
Figure 8: Impacts to California Red-Legged Frog Habitat 66

List of Tables

Table 1: Survey Dates and Personnel 18
Table 2: Natural Communities and Other Vegetation in the BSA (acres) 21
Table 3: Potential Jurisdictional Waters in the BSA (acres) 29
Table 4: Special Status Species Potentially Occurring in the Panoche Road Bridge Biological Study Area 31
Table 5: Permanent and Temporary Impacts to Vegetation Communities 43
Table 6: Native Species Mix 47
Table 7: Effect Determinations for Federally-Listed Species and Designated Critical Habitat 78

List of Abbreviated Terms

ac	acre(s)
ACOE	Army Corps of Engineers
BMP	best management practices
BSA	Biological Study Area
CDFW	California Department of Fish and Wildlife
CEQA	California Environmental Quality Act
CESA	California Endangered Species Act
Caltrans	California Department of Transportation
CMP	corrugated metal pipe
CNDDB	California Natural Diversity Data Base
CNPS	California Native Plant Society
County	San Benito County
CRLF	California red-legged frog
CTS	California tiger salamander
CWA	Clean Water Act
EFH	Essential Fish Habitat
EO	Executive Order
ESA	Environmentally Sensitive Area
FESA	Federal Endangered Species Act
ft	foot/feet
LSA	LSA Associates, Inc.
MBTA	Migratory Bird Treaty Act
mi	mile(s)
MSA	Magnuson-Stevens Fishery Conservation and Management Act
NMFS	National Marine Fisheries Service
NWP	Nationwide Permit
OHWM	ordinary high water mark
RSP	Rock slope protection
RWQCB	Regional Water Quality Control Board
SCCC	South Central California Coast (steelhead)
U.S.	United States
USFWS	United States Fish and Wildlife Service
WPCP	Water Pollution Control Program

Chapter 1. Introduction

San Benito County (County), with Federal Highway Administration funding, and in conjunction with the California Department of Transportation (Caltrans), proposes to replace the Panoche Road Bridge (No. 43C0027) over Tres Pinos Creek with a longer and wider bridge (No. 43C0070). The bridge is located in a rural area approximately 25 miles (mi) southeast of Hollister (Figures 1 through 3).

1.1. Project History

Panoche Road is classified as a 'Rural Major Collector' with an average daily traffic volume of approximately 150 vehicles. The road is situated roughly east to west, connecting State Route 25 and Interstate 5. Where Panoche Road crosses Tres Pinos Creek, the roadway alignment has a slight "S" curve to accommodate the angle of the bridge crossing, and does not meet current design standards for minimum design speed or width. East of the Project site, the condition of Panoche Road degrades, and, consequently, the resulting design speed hinders drivers from using the road as a preferred alternate route to Interstate 5.

The purpose of the proposed project is to replace the bridge with a longer, wider structure, and to shift the location of the new bridge to match a straightened roadway alignment. The new bridge will provide two 12-foot (ft) traffic lanes with adjacent 4 ft shoulders meeting current design standards.

The environmental document for this project was originally circulated for public review in June 2015. During the review period the California Department of Fish and Wildlife (CDFW) identified two concerns they had for the project: 1) The proposed rock weir in the channel and 2) the proposed culvert at the un-named channel that flows to Tres Pinos Creek. Subsequently, the County, consultant team, CDFW and Caltrans had several phone conversations to work through the concerns and discuss alternative designs that would have less impact than what had been proposed with no immediate resolution.

The design was revisited in 2019. The weir was removed in favor of a rock slope protection (RSP) "blanket" that would be placed up to 225 feet upstream of the proposed bridge on the existing bank. The design was also revised to realign the unnamed tributary so that it would remain as an open channel, and would run between the road and proposed retaining wall on the south side of the road.

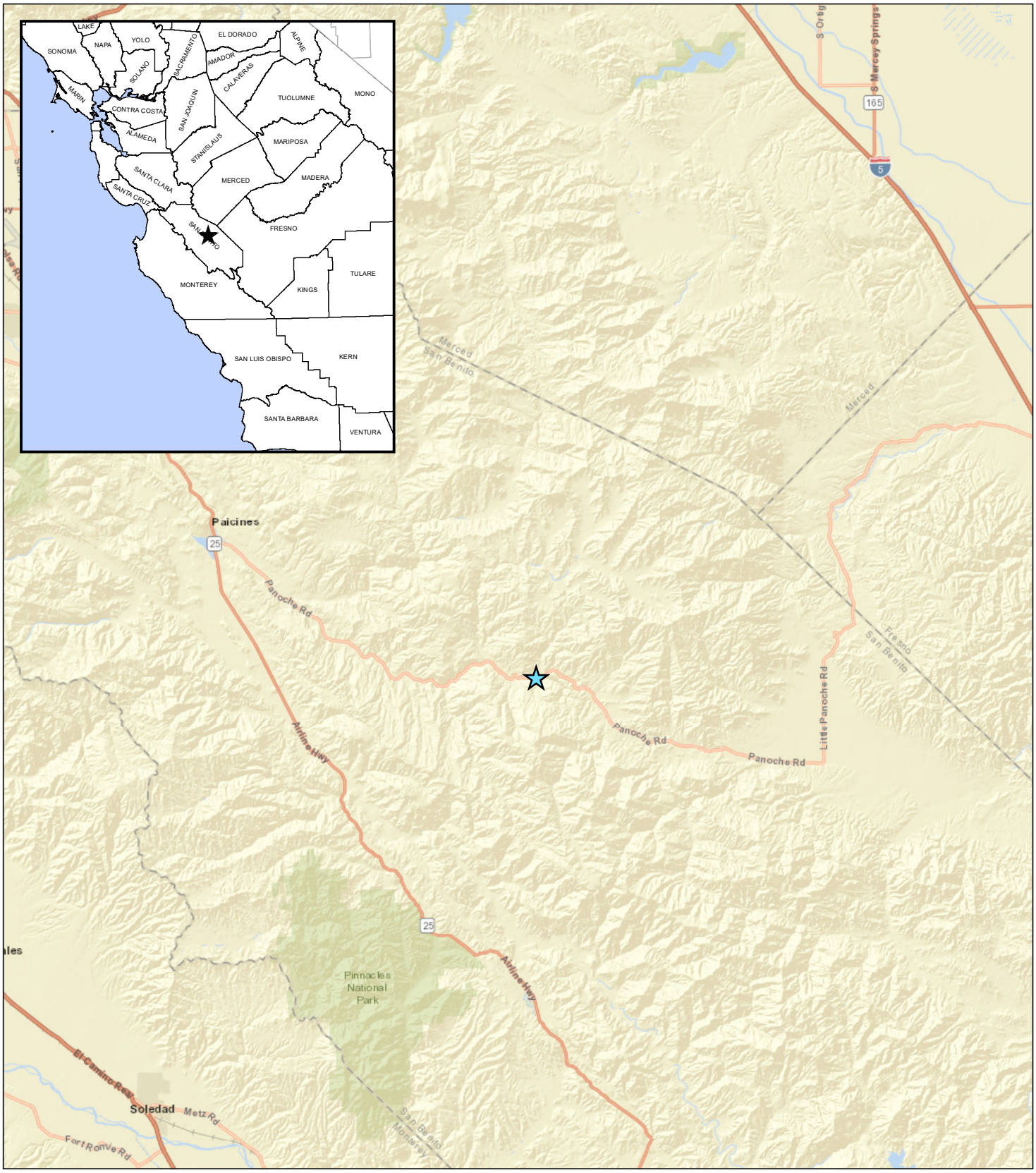

LEGEND

Project Location

FIGURE 1

Panoche Road Bridge (No. 43C0027) over
Tres Pinos Creek Replacement Project
San Benito County, California; Caltrans District 5
Federal Project No. BRLO-5943(056)

Regional Location

0 2.5 5
Miles

SOURCE: ESRI World Street Map (05/2020)

I:\QCE2001\GIS\Reports\NES\NES_Fig1_Regional_loc.mxd (10/29/2020)

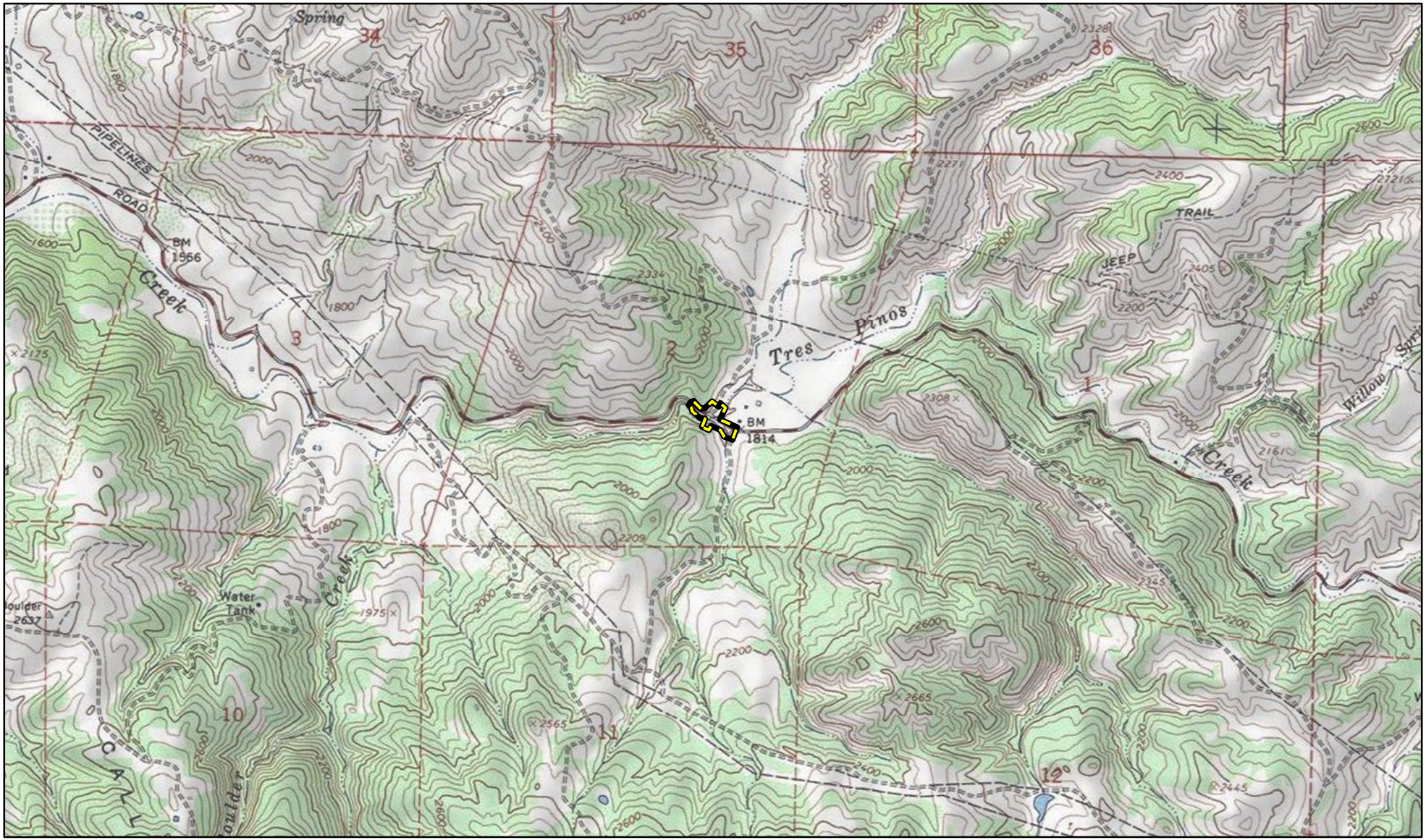

LEGEND

Biological Study Area - (3.66 ac)

FIGURE 2

0 1000 2000
FEET

Panoche Road Bridge (No. 43C0027) over
Tres Pinos Creek Replacement Project
San Benito County, California; Caltrans District 5
Federal Project No. BRLO-5943(056)

Biological Study Area on Topographic Base

SOURCE: USGS 7.5-minute topographic quadrangle Panoche Pass, CA (1968, 1971 ed.)

I:\QCE2001\GIS\Reports\NES\NES_Fig2_Prj_vicin_topo.mxd (10/29/2020)

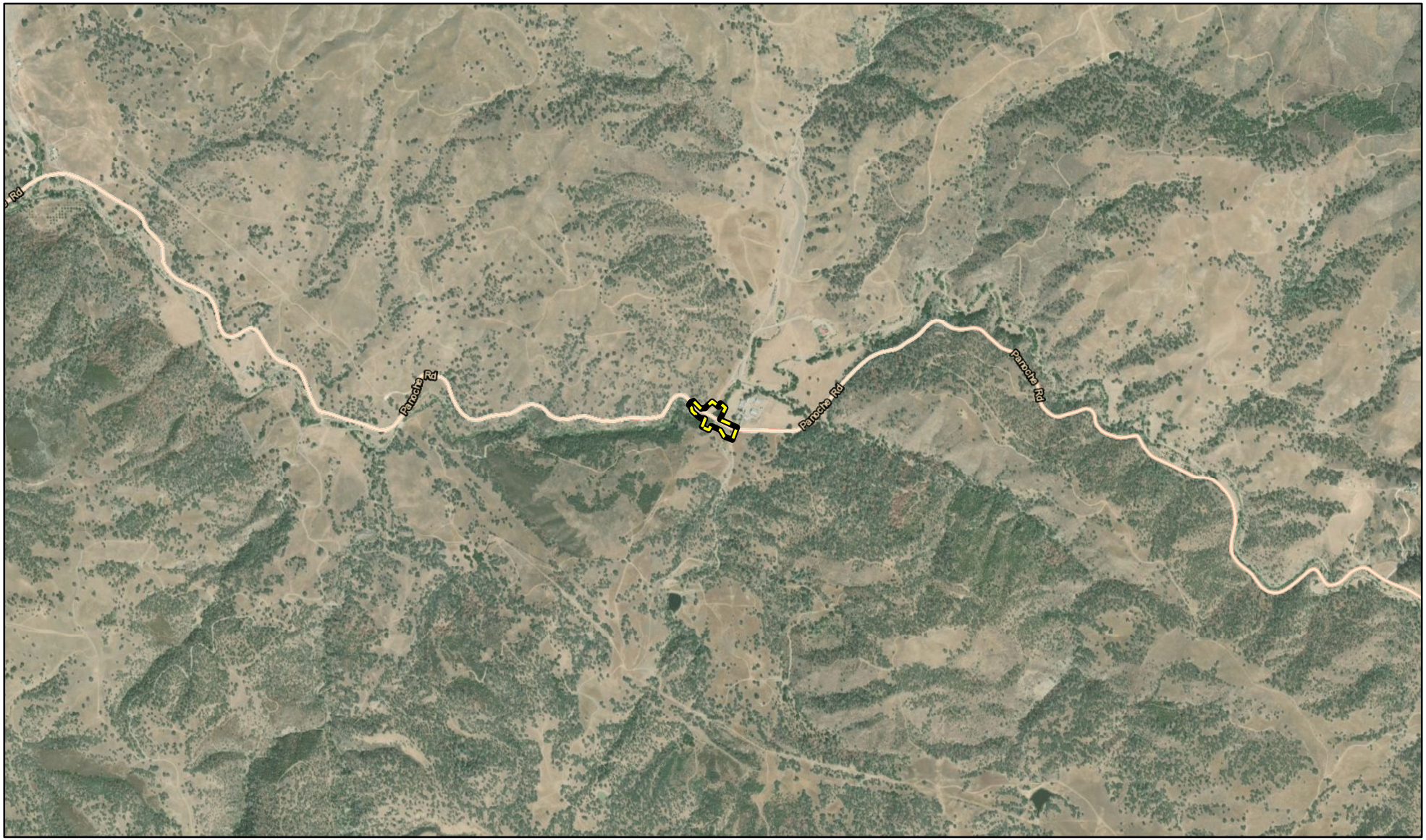

LEGEND

Biological Study Area - (3.66 ac)

0 1000 2000
FEET

SOURCE: ESRI World Imagery (10/2018)

I:\QCE2001\GIS\Reports\NES\NES_Fig3_Prj_vicin_aerial.mxd (10/19/2020)

FIGURE 3

Panoche Road Bridge Replacement Project
San Benito County, California
Bridge No. 43C0027; Caltrans District 5
Federal Project No. BRLO-5943(056)

Biological Study Area on Aerial Base

1.2. Project Description

Activities associated with the proposed Project would include: existing bridge demolition; channel RSP; approach roadway work; new bridge and retaining wall construction; metal beam guard rail installation; bridge railing installation; temporary traffic control during construction; right-of-way acquisition and temporary construction easements; and utility relocation.

Prior to construction activities, the Tres Pinos Creek channel will be clearly delineated by environmentally sensitive area (ESA) fencing and barrier fencing to keep construction equipment and personnel out of non-work areas. All necessary Best Management Practices (BMPs) will be implemented to ensure that no soil or other materials are discharged into Tres Pinos Creek. BMPs will include the used of wattles and silt fences along access roads and around staging and equipment storage areas.

The total length of the proposed Project would be approximately 685 ft, which includes approximately 550 ft of roadway work beyond the bridge abutments. Roadway work would consist of realigning the roadway downstream (southerly) of the existing bridge to allow for construction of the new bridge in one stage while maintaining traffic flow on the existing alignment during construction. The proposed shifted alignment would improve roadway geometry by eliminating the slight “S” curve over the existing bridge.

The proposed bridge would be approximately 132 ft long with two equal spans supported by a pier, by approximately 35 ft wide. The bridge foundation type is expected to be spread footings at the abutments and piers. The footings would be buried below the channel flowline. The draft plans in Appendix A show preliminary design of the structure (Foundation Plan, Abutment Plans and Pier Details). The footings would be protected from hydraulic scour with RSP. The size and extent of the RSP expected is shown in the draft plans in Appendix A (Construction Details Sheets C-4 and C-5. The proposed structure type is a cast-in-place pre-stressed concrete slab with a structure depth of approximately 2.0 ft. Bridge construction would require falsework in the Tres Pinos Creek channel spanning over the wetted creek area.

The new bridge would have adequate freeboard to address the expected drift material and allow for drift in the channel. The new bridge would provide two 12-ft traffic lanes with adjacent 4-ft wide paved shoulders on either side. The approach rail type at the northwest corner of the bridge would be selected in order to maintain access to a gated driveway located adjacent to the Project boundary. The driveway intersection at Panoche Road would be shifted west by up to 40 ft to improve truck turning access.

A flow diversion will be required during construction of the pier, as water in this section of Tres Pinos Creek generally flows year-round, fed mostly by underground springs in the summer months. The flow diversion will consist of a corrugated metal pipe (CMP) appropriately sized for expected flows. The CMP will be placed along the low-flow invert of the natural creek and a small earthen berm will be installed at each end of the pipe to direct water into the pipe. Clean sand and gravel will be used at the base of the berm to protect the existing creek channel. Both berms and CMP will be completely removed at the completion of project construction.

Demolition of the existing bridge would involve constructing a temporary decking or other system over the creek channel to avoid dropping debris into the water. The existing bridge would be removed after construction of the new bridge is completed. Scour countermeasures would be used leaving either all or a portion of the existing east abutment in place and removing the west abutment, depending on its condition after further examination. For the purposes of the impact analysis, it was conservatively assumed that the east abutment will be removed. The creek bank would be re-graded to remove a portion of the artificial fill material that was placed during construction of the existing bridge.

An unnamed tributary is located south of the bridge crossing and flows east to west, discharging into Tres Pinos Creek on the west bank adjacent to the existing bridge. The tributary channel currently flows between the southern edge of Panoche Road and the toe of a steep hillside adjacent to the road, past the existing east bridge abutment and into the creek. Because the alignment of the roadway is shifting to the south, this channel would essentially be covered by the construction of the new road bed. The proposed solution is to grade a new channel located along the south edge of the realigned road. A portion of the realigned channel will be rectangular in shape, and bound between the vertical wing wall of the bridge (at the southeast corner of the bridge) and a vertical retaining wall that will retain a new cut slope in the adjacent hillside. The wall length is estimated to be approximately 140 ft long.

One individual owns all the property surrounding the Project site. Panoche Road is maintained by the County of San Benito through a prescriptive easement. A natural spring located on the private parcel provides significant water supply for a large ranch operation. Engineering studies have been conducted and completed by the land owner identifying soil layers and the approximate extent of the aquifer supplying the natural spring. The landowner has a spring box and pump house located approximately 80 ft northeast of the Project site. Construction activities at the Project site will be monitored to

avoid impacts to the property owner's natural spring and the supplying aquifer.

RSP will be placed on the banks of the creek to protect the abutment from hydraulic scour. The RSP blanket will continue upstream on the east bank to mitigate for increased channel velocities (in the vicinity of the natural spring) that result from removing the existing bridge and widening the channel with the longer bridge. The RSP blanket will be placed on the existing bank surface, without excavating into the bank, in order to avoid affecting the natural spring.

Temporary impacts to native vegetation communities would be mitigated through on-site, like-kind revegetation. All temporary barriers, fencing, and erosion control materials would be removed following the completion of project construction or revegetation activities, where applicable.

Figure 4 shows the project design and Biological Study Area (BSA) overlaid on an aerial photo base. Design plans are located in Appendix A.

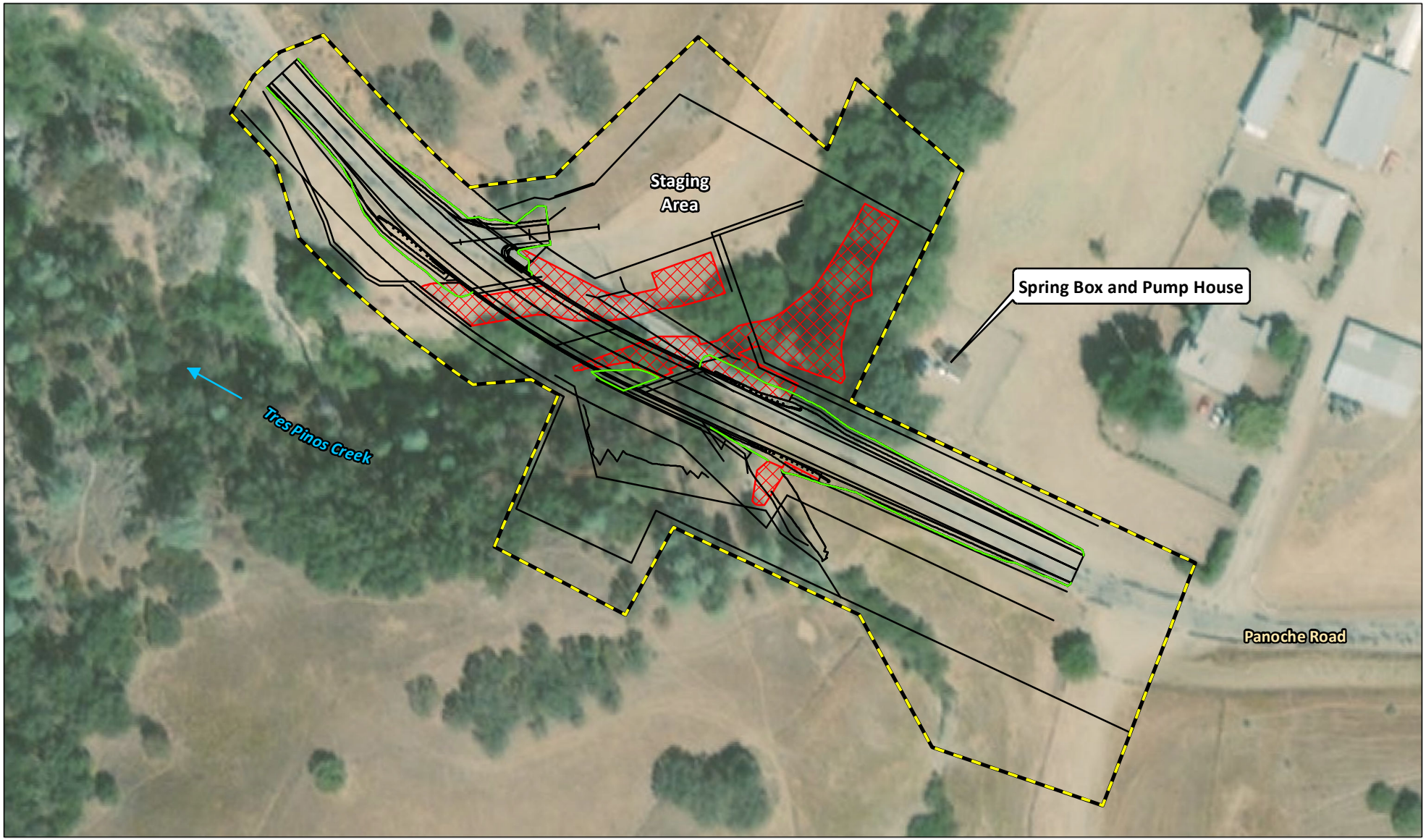

LEGEND

- Biological Study Area - (3.66 ac)
- Project Design
- Rock Slope Protection
- Cut and Fill

0 50 100
FEET

SOURCE: Basemap - ESRI World Imagery (10/2018); Design - Quincy Engineering (03/2020)

I:\QCE2001\GIS\Reports\NES\NES_Fig4_BSA_design.mxd (11/24/2020)

FIGURE 4

Panoche Road Bridge (No. 43C0027) over
Tres Pinos Creek Replacement Project
San Benito County, California; Caltrans District 5
Federal Project No. BRLO-5943(056)

Biological Study Area and Project Design

Chapter 2. Study Methods

2.1. Regulatory Requirements

2.1.1. Special Status Species

Special status species include plants and animals that are: 1) listed as rare, threatened, or endangered by United States Fish and Wildlife Service (USFWS) or California Department of Fish and Wildlife (CDFW) under State or federal endangered species acts; 2) are on formal lists as candidates for listing as threatened or endangered; 3) are on formal lists as species of concern; or 4) are otherwise recognized at the State, federal, or local level as sensitive.

2.1.1.1. Federal and California Endangered Species Acts

Under the Federal Endangered Species Act (FESA), it is unlawful to “take any species listed as threatened or endangered”. “Take” is defined as to “harass, harm, pursue, hunt, shoot, wound, kill, trap, capture, or collect, or attempt to engage in any such conduct.” An activity is defined as “take” even if it is unintentional or accidental. Take provisions under FESA apply only to listed fish and wildlife species under the jurisdiction of the USFWS and/or the National Oceanic & Atmospheric Administration, National Marine Fisheries Service (NMFS). Consultation with USFWS or NMFS is required if a project “may affect” a listed species.

When a species is listed, the USFWS and/or the NMFS, in most cases, must officially designate specific areas as critical habitat for the species. Consultation with USFWS and/or the NMFS is required for projects that include a federal action or federal funding if the project may affect designated critical habitat.

Under the California Endangered Species Act (CESA), it is unlawful to “take” any species listed as rare, threatened, or endangered. Under CESA, “take” means to “hunt, pursue, catch, capture, or kill, or attempt to hunt, pursue, catch, capture, or kill”. CESA take provisions apply to fish, wildlife, and plant species. Take may result whenever activities occur in areas that support a listed species. Consultation with CDFW is required if a project will result in “take” of a listed species.

2.1.1.2. Magnuson-Stevens Fishery Conservation and Management Act

Under the Magnuson-Stevens Fishery Conservation and Management Act (MSA), Essential Fish Habitat (EFH) must be designated in every fishery management plan.

Public Law 104-297, the Sustainable Fisheries Act of 1996, amended the MSA to establish new requirements for EFH descriptions in federal fishery management plans. In addition, the MSA established procedures designed to identify, conserve, and enhance EFH for those species regulated under a federal fisheries management plan. Pursuant to the MSA:

- Federal agencies must consult with NMFS on all actions, or proposed actions, authorized, funded, or undertaken by the agency, that may adversely affect EFH;
- NMFS must provide conservation recommendations for any federal or state action that would adversely affect EFH;
- Federal agencies must provide a detailed response in writing to the NMFS within 30 days after receiving EFH conservation recommendations. The response must include a description of measures proposed by the agency for avoiding, mitigating, or offsetting the effect of the activity on EFH. In the case of a response that is inconsistent with the NMFS' EFH conservation recommendations, the federal agency must explain its reasons for not following the recommendations.

EFH has been defined for the purposes of the MSA as "those waters and substrate necessary to fish for spawning, breeding, feeding, or growth to maturity." NMFS has further added the following interpretations to clarify this definition:

- **"Waters"** include aquatic areas and their associated physical, chemical, and biological properties that are used by fish, and may include areas historically used by fish where appropriate;
- **"Substrate"** includes sediment, hard bottom, structures underlying the waters, and associated biological communities;

- **"Necessary"** means the habitat required to support a sustainable fishery and the managed species' contribution to a healthy ecosystem; and
- **"Spawning, breeding, feeding, or growth to maturity"** covers the full life cycle of a species.

Adverse effect means any effect that reduces quality and/or quantity of EFH, and may include direct (e.g., contamination or physical disruption), indirect (e.g., loss of prey or reduction in species fecundity), or site-specific or habitat-wide effects, including individual, cumulative, or synergistic consequences of actions.

EFH consultation with the NMFS is required regarding any federal agency action that may adversely affect EFH, including actions that occur outside EFH, such as certain upstream and upslope activities.

The objectives of this EFH consultation are to determine whether the Proposed Action would adversely affect designated EFH and to recommend conservation measures to avoid, minimize, or otherwise offset potential adverse effects to EFH. The Magnuson-Stevens Act requires consultation for all federal agency actions that may adversely affect EFH. EFH consultation with NMFS is required by federal agencies undertaking, permitting, or funding activities that may adversely affect EFH, regardless of its location. Under Section 305(b)(4) of the MSA, NMFS is required to provide EFH conservation and enhancement recommendations to federal and state agencies for actions that adversely affect EFH. Wherever possible, NMFS utilizes existing interagency coordination processes to fulfill EFH consultations with federal agencies. For the proposed action, this goal is being met by incorporating EFH consultation into the environmentally sensitive area (ESA) Section 7 consultation.

2.1.2. Waters of the United States and Other Jurisdictional Waters

2.1.2.1. Army Corps of Engineers

Under Section 404 of the Clean Water Act (CWA), the Army Corps of Engineers (ACOE) regulates the discharge of dredged or fill material into waters of the United States (U.S). Waters of the U.S. are those waters that have a connection to interstate commerce, either direct via a tributary system

or indirect through a nexus identified in the ACOE regulations. In non-tidal waters, the lateral limit of jurisdiction under Section 404 extends to the ordinary high water mark (OHWM) of a waterbody or, where adjacent wetlands are present, beyond the OHWM to the limit of the wetlands. The OHWM is defined as “that line on the shore established by the fluctuations of water and indicated by physical characteristics such as a clear natural line impressed on the bank, shelving, changes in the character of the soil, destruction of terrestrial vegetation, the presence of litter and debris, or other appropriate means that consider the characteristics of the surrounding area” (33 Code of Federal Regulations 328.3). In tidal waters, the lateral limit of jurisdiction extends to the high tide line or, where adjacent wetlands are present, to the limit of the wetlands.

Wetlands

Wetlands are defined as “those areas that are inundated or saturated by surface or ground water at a frequency and duration sufficient to support, and that under normal circumstances do support, a prevalence of vegetation typically adapted for a life in saturated soil conditions”.

Nonwetland Waters

Nonwetland waters essentially include any body of water, not otherwise exempted, that displays an OHWM.

Isolated Waters

As discussed above, the ACOE regulatory jurisdiction under Section 404 is founded on a connection between the water body in question and its connectivity to navigable waters. This connection may be direct, through a tributary system linking a stream channel with traditional navigable waters, or may be indirect, through a nexus identified in the USACE regulations.

2.1.2.2. Regional Water Quality Control Board

Under Section 401 of the CWA, the State Water Resources Control Board must certify all activities requiring a 404 permit. The Regional Water Quality Control Board (RWQCB) regulates these activities and issues water quality certifications for those activities requiring a 404 permit. In addition, the RWQCB has authority to regulate the discharge of “waste” into waters of the State pursuant to the Porter-Cologne Water Quality Control Act.

2.1.2.3. California Department of Fish and Wildlife

CDFW, through provisions of Section 1602 of the California Fish and Game Code, is empowered to issue agreements for any alteration of a river, stream, or lake where fish or wildlife resources may be substantially adversely affected. Streams (and rivers) are defined by the presence of a channel bed and banks, and at least an ephemeral or intermittent flow of water. CDFW regulates wetland areas only to the extent that those wetlands are part of a river, stream, or lake as defined by CDFW.

CDFW generally includes, within the jurisdictional limits of streams and lakes, any riparian habitat present. Riparian habitat includes willows, cottonwoods, and other vegetation typically associated with the banks of a stream or lake shoreline. In most situations, wetlands associated with a stream or lake would fall within the limits of riparian habitat. Thus, defining the limits of CDFW jurisdiction based on riparian habitat will automatically include any wetland areas. Riparian communities may not fall under Corps jurisdiction unless they are below the OHWM or classified as wetlands.

2.1.2.4. Executive Order 11990: Protection of Wetlands

Executive Order (EO) 11990 mandates leadership on the part of federal agencies to reduce loss and degradation of wetlands and to preserve and enhance the beneficial values and functions of wetlands. Each federal agency "shall avoid undertaking or providing assistance for new construction located in wetlands unless the head of the agency finds that (1) there is no practicable alternative to such construction, and (2) that the proposed action includes all practicable measures to minimize harm to wetlands which may result from such use."

2.1.3. Migratory Bird Treaty Act

The Migratory Bird Treaty Act (MBTA) prohibits actions that will result in "take" of migratory birds, their eggs, feathers, or nests. "Take" is defined in the MBTA as any means or any manner to hunt, pursue, wound, kill, possess, or transport, any migratory bird, nest, egg, or part thereof.

Migratory birds are also protected, as defined in the MBTA, under Section 3513 of the California Fish and Game Code.

2.1.4. California Fish and Game Code (Breeding Birds)

Section 3503 of the California Fish and Game Code prohibits the take, possession, or needless destruction of the nest or eggs of any bird, except as otherwise provided by the California Fish and Game Code or other regulation.

2.1.5. California Public Resources Code 21083.4: Impacts to Oak Woodlands

Counties are required to evaluate impacts to oak woodlands as part of the environmental analysis conducted in compliance with California Environmental Quality Act (CEQA). If a County determines a proposed project may result in the conversion of oak woodlands that will have a significant effect on the environment, the County must require the project to comply with one or more of the oak woodlands mitigation measures set forth in the Code.

2.1.6. Executive Order 13112: Invasive Species

Under EO 13112, an invasive species is defined as “an alien species (a species not native to a particular ecosystem) whose introduction does or is likely to cause economic and environmental harm or harm to human health”. Invasive species are determined by the Invasive Species Council.

In addition to other mandates, EO 13112 mandates federal agencies whose actions may affect the status of invasive species to “not authorize, fund, or carry out actions that it believes are likely to cause or promote the introduction or spread of invasive species”.

2.2. Studies Required

Prior to conducting any field studies, the limits of the BSA were established, as shown in Figure 4. The BSA, totaling approximately 3.66 ac, consists of the project footprint, existing roadways, cut/fill slopes, and access and staging areas. The BSA also includes lands beyond the footprint that could potentially be affected by project construction and/or were determined necessary to inventory in order to perform an adequate analysis of project impacts.

The studies required to fully document the environmental conditions of the BSA included a general biological survey, vegetation mapping, preliminary jurisdictional waters delineation, a habitat assessment for California red-legged frog (CRLF) and California tiger salamander (CTS), and focused surveys for special status plants.

2.2.1. Literature Review

A list of sensitive wildlife and plant species potentially occurring within the BSA and vicinity was compiled to evaluate potential impacts resulting from project construction. Sources used to compile the list include the California Natural Diversity Data Base (CNDDB), the USFWS IPaC Trust Resources Report, and the California Native Plant Society (CNPS) Online Inventory referencing the Quien Sabe Valley, Ruby Canyon, Ortigalita Peak, Cherry Peak, Panoche Pass, Cerro Colorado, Bickmore Canyon, San Benito, and Llanada United States Geological Survey 7.5-minute quadrangles. All lists are included in Appendix B.

The special status species lists obtained from the CNDDB, CNPS, and USFWS were reviewed to determine which species could potentially occur within the vicinity of the BSA. The cumulative list (included in Section 3.2) includes numerous species representing a variety of habitat types. The list includes each species' protection status, habitat information, status in the BSA, and supporting comments as necessary.

Two fish species, the Sacramento sucker (*Catostomus occidantalis*) and California roach (*Hesperoleucus symmetricus*), appear on the lists but have no special status. Since these species have no status, they are not included in Table 4.

Additionally, two invertebrate species, the San Benito harvestman (*Calicina arida*) and the Pinnacles optioservus riffle beetle (*Optioservus canus*), appear on the lists but have no special status. Because little to no information is available about these species, and they have no status, they are not included in Table 4.

The determination of whether a species could potentially occur within the BSA was based on the availability of suitable habitat within and adjacent to the BSA, as well as known occurrences of the species in or adjacent to the BSA according to the CNDDB. Species requiring specific habitat not present in the vicinity of the project (e.g., bogs or fens) were eliminated as potentially occurring and are not discussed further. Those species that could potentially occur in the BSA from habitat suitability or on known occurrences in or within the vicinity of the BSA are discussed in Sections 4.2 and 4.3.

2.2.2. Field Surveys

Field surveys conducted for the project included a general survey to map vegetation communities, a preliminary jurisdictional delineation, a site assessment for CRLF (*Rana draytonii*) and CTS (*Ambystoma californiense*), and a focused plant survey.

2.2.2.1. General Biological Survey/Vegetation Mapping

A general biological survey and vegetation mapping of the BSA was conducted by LSA Associates, Inc., (LSA) biologist Mike Trueblood on May 11, 2011. A follow-up survey to document any changes in field conditions was conducted by LSA biologist Anna Van Zuuk on April 16, 2020. Naturally occurring vegetation in the BSA was classified according to *A Manual of California Vegetation, Second Edition* (Sawyer, Keeler-Wolf, and Evans 2008), as appropriate. Managed or developed areas were classified according to their dominant plant species. The names of the plant species are consistent with *The Jepson Manual: Vascular Plants of California, Second Edition* (Baldwin, B. G., et. al., editors 2012) and the Jepson Online Interchange for California Floristics (Jepson eFlora 2020).

Wildlife species observed during the survey were identified and recorded. During this survey, the BSA was also surveyed for potential habitat to support special status plants.

2.2.2.2. Potential Jurisdictional Waters Determination and Delineation

A delineation of potential waters of the United States (U.S.) potentially subject to regulation by the ACOE was conducted on July 6, 2011 by LSA biologist Mike Trueblood. Additional data points were added during the follow-up survey by LSA biologist Anna Van Zuuk on April 16, 2020 to document changes in field conditions.

All potential waters of the U.S. in the BSA were delineated in accordance with the 1987 ACOE Wetland Delineation Manual, the September 2008 Regional Supplement - Arid West Region, and the ACOE Regulatory Guidance Letter 16-01 regarding Preliminary Jurisdictional Delineations (October 2016). Both field investigations were conducted in accordance with the ACOE Routine Approach for small areas (i.e., equal to or less than 5 acres). At each point, a pit was dug and soils and hydrology examined; vegetation was also

characterized at each data point. Data sheets are included in Appendix C. The limits of CDFW jurisdiction were also delineated.

2.2.2.3. California Red-Legged Frog and California Tiger Salamander Habitat Assessment

A field survey for the CRLF and CTS site assessment was conducted by LSA biologist Mike Trueblood on May 11, 2011. A follow-up survey was conducted by LSA biologist Anna Van Zuuk on April 16, 2020. A combined site assessment was prepared in accordance with USFWS Revised Guidance on Site Assessments and Field Surveys for the California Red-legged Frog (*Rana draytonii*), dated August 2005, and with the Interim Guidance on Site Assessment and Field Surveys for Determining Presence or a Negative Finding of the California Tiger Salamander, dated October 2003. The assessment is included in Appendix D.

The follow-up survey in April 2020 did not find any changes to habitat conditions noted in the CRLF and CTS site assessment. Tres Pinos Creek within the Action Area flows too swiftly to provide suitable aquatic breeding habitat for CTS, even in the slower moving sections of the creek, and the California annual grasslands and pasture communities are generally rocky with few areas for fossorial mammals to burrow or are actively grazed. No suitable burrows or other suitable openings were observed in the Action Area during the follow-up survey.

2.2.2.4. Focused Plant Survey

LSA biologist Ali Summers conducted a focused plant survey of the BSA on May 18, 2011. The survey was conducted during the normal blooming period of most special status plants that had potential to occur in the BSA based on the habitat present. The surveys were not conducted during the normal blooming period of two special status plants, Munz's tidy tips (*Layia munzii*), which blooms March to April, and chaparral ragwort (*Senecio aphanactis*), which blooms January to April. A follow-up survey was conducted by LSA botanist Anna Van Zuuk on April 16, 2020 for these two species as well as marsh sandwort (*Arenaria paludicola*). All plant species observed were identified to a sufficient taxonomic level to determine if they were the target species.

2.3. Personnel and Survey Dates

Table 1 below provides a summary of the field surveys performed for this project.

Table 1: Survey Dates and Personnel

Date	Personnel	Task
May 11, 2011	M. Trueblood, L. Belt	Vegetation mapping, general biological survey, CRLF/CTS site assessment
May 18, 2011	A. Summers	Special status plants survey
July 6, 2011	M. Trueblood	Jurisdictional delineation
April 16, 2020	A. Van Zuuk	Jurisdictional delineation, focused plant survey, CRLF survey, vegetation mapping

2.4. Agency Coordination and Professional Contacts

LSA attended a conference call with Chris Diel of USFWS and Brandon Sanderson of CDFW on August 22, 2011 to discuss the CRLF/CTS site assessment and the potential for these species to occur in the BSA. Recommendations included implementation of typical avoidance and minimization measures for both CTS and CRLF, as well as additional surveys and Section 7 consultation for CRLF. The results of the conference call are documented in Appendix E.

LSA corresponded with Brandon Sanderson of the CDFW via e-mail on January 3, 2012, regarding the possibility of Nelson's antelope squirrel occurrence in the vicinity of the BSA. Mr. Sanderson advised that these squirrels are not likely to occur in the area.

LSA spoke with Devin Best of NMFS on January 5, 2012 about the potential for South Central California Coast steelhead occurrence in the BSA. Mr. Best advised that this fish does occur in the reach of Tres Pinos Creek within the BSA, and suggested a dewatering work window of July 15 – October 15, consistent with CDFW guidelines.

LSA requested additional technical assistance from Mr. Best at NMFS on February 6, 2013 for guidance regarding design for a new weir feature. Mr. Best advised that the proposed anchor pipes be removed from the design. Once the pipes were removed from the design, Mr. Best concurred that the

weir design was acceptable on April 4, 2013. The weir has subsequently been removed from the design in favor of additional RSP.

LSA spoke with Paul Holmes of Caltrans on February 26, 2021 regarding the recommended in-water work windows for SCCC steelhead. Due to the nature of the design of the new bridge, the central pier needs to be constructed in the same construction season as the bridge superstructure. Construction is expected to take 6 – 8 months and would require a minimum of two construction seasons. Due to these constraints, Mr. Holmes advised that the project request accommodation from NMFS for a June 15 through October 15 work window.

No further coordination has occurred.

2.5. Limitations That May Influence Results

The collection of biological field data is normally subject to environmental factors that cannot be controlled or reliably predicted. Consequently, the interpretation of field data must be conservative and must consider the uncertainties and limitations necessarily imposed by the environment. Surveys were conducted during the seasons when the special-status species that could occur in the vicinity of the BSA would be observable, if present. Several species considered herein are highly mobile and utilize underground refuges and, therefore, may not be detectable within a given survey area at any given point in time. In addition, the results of the biological resource surveys are limited where extremely dense vegetation obscured views. Due to the experience and qualifications of the consulting biologists involved in the surveys, these limitations are not expected to severely influence the results or considerably alter the findings documented herein.

Design plans, schedules, and construction methods for the project are subject to refinement. Please note that any change in the analyzed design, schedule, or construction methods could affect the conclusions discussed in this report.

Chapter 3. Results: Environmental Setting

3.1. Description of the Existing Physical and Biological Conditions

3.1.1. Biological Study Area

The BSA is located in central San Benito County, on the eastern side of the Diablo mountain range, and approximately 25 mi south of the City of Hollister and 15 mi east of Highway 25. The project is located within the Panoche Pass quadrangle, in Section 2, Township 15 South, and Range 8 East.

The BSA, totaling 3.66 ac, is approximately 0.15 mi in length and extends along Panoche Road across Tres Pinos Creek.

3.1.2. Physical Conditions

The BSA lies in a largely undeveloped area in the low mountains of the Diablo Range, within the Tres Pinos Creek watershed. Aquatic features in the general vicinity are composed of small ephemeral drainages as well as several stock ponds. Many of the ephemeral drainages are tributaries to Tres Pinos Creek. The dominant vegetation communities in the vicinity of the BSA are willow riparian forest, annual grassland, and mixed oak forest. Primary land uses in the vicinity are rural residences and pasture.

Panoche Road extends east to west through the BSA and consists of a narrow asphalt roadway. The majority of the land in the area is privately owned and appears to be similar to the BSA in use and vegetative characteristics.

Undeveloped areas within the BSA consist of Tres Pinos Creek and associated arroyo willow vegetation and wetlands, mulefat vegetation, mixed oak woodland, California annual grassland, and a small amount of pasture. Lands adjacent to the BSA consist primarily of annual grassland and oak woodland. Representative photos of the BSA are shown in Appendix F.

3.1.3. Biological Conditions in the Biological Study Area

3.1.3.1. Natural Communities

As noted above, vegetation communities were classified based on the descriptions in Sawyer, Keeler-Wolf, and Evans (2008), as applicable. Natural communities in the BSA include: California annual grassland series, arroyo willow series, mixed oak series, mulefat series, riverine, and riverine wetlands. One other vegetation community not considered natural is also present: pasture. Natural communities comprise 3.02 ac of the BSA, as summarized in Table 2. Natural communities, other vegetated areas, and developed areas in the BSA are shown in Figure 5.

Table 2: Natural Communities and Other Vegetation in the BSA (acres)

Natural Communities	Acres
California Annual Grassland Series	1.65
Arroyo Willow Series	0.41
Mixed Oak Series	0.39
Mulefat Series	0.15
Riverine	0.05
Riverine Wetlands	0.37
Subtotal	***3.02***
Other Vegetation Communities	
Pasture	0.01
Subtotal	***0.01***
Total	**3.03**

California Annual Grassland Series

The California annual grassland series, totaling 1.65 ac, is largely located in the northwest and southeast portions of the BSA. This community is composed of many non-native annual grasses and native wildflowers; composition varies among stands and is influenced by many factors, such as fall temperature, precipitation, microtopography, etc. Dominant plant species include soft brome (*Bromus hordeaceus*), Italian rye grass (*Festuca perennis*), slender oat (*Avena barbata*), foxtail barley (*Hordeum murinum*), narrowleaf goldenbush (*Ericameria linearifolia*), California buckwheat (*Eriogonum fasciculatum*), chick lupine (*Lupinus microcarpus*), and common fiddleneck (*Amsinckia menziesii*).

LEGEND

Biological Study Area - (3.66 ac)

Natural Communities/Land Uses - (3.66 ac)

Arroyo Willow Series - (0.41 ac)

California Annual Grassland Series - (1.65 ac)

Mixed Oak Series - (0.39 ac)

Mulefat Series - (0.15 ac)

Riverine - (0.05 ac)

Riverine Wetlands - (0.37 ac)

Pasture - (0.01 ac)

Developed - (0.63 ac)

0 50 100
FEET

FIGURE 5

Panoche Road Bridge (No. 43C0027) over
Tres Pinos Creek Replacement Project
San Benito County, California; Caltrans District 5
Federal Project No. BRLO-5943(056)

Natural Communities/Land Uses

SOURCE: Basemap - ESRI World Imagery (10/2018); Mapping - LSA (10/2020)

I:\QCE2001\GIS\Reports\NES\NES_Fig5_Plant_comm.mxd (10/29/2020)

Arroyo Willow Series

This arroyo willow series, totaling 0.41 ac, occurs along Tres Pinos Creek within the BSA. Arroyo willow (*Salix lasiolepis*) and narrow leaved willow (*Salix exigua*) are dominant and form a small thicket south of the bridge. Mulefat (*Baccharis salicifolia*), blue elderberry (*Sambucus nigra* ssp. *caerulea*), and Fremont cottonwood (*Populus fremontii*) are also present. Poison hemlock (*Conium maculatum*), California wild rose (*Rosa californica*), California gooseberry (*Ribes californicum*), common plantain (*Plantago major*), California mugwort (*Artemisia douglasiana*), and yellow monkey flower (*Erythranthe guttata*) are the primary understory species.

Mixed Oak Series

The mixed oak series, totaling 0.39 ac, is primarily located on the north-facing slope in the south central portion of the BSA. This community consists of an overstory dominated by valley oak (*Quercus lobata*) and coast live oak (*Quercus agrifolia*), and also contains Alvord oak (*Quercus* x *alvordiana*), gray pine (*Pinus sabiniana*), and California juniper (*Juniperus californica*). The understory is dominated by a variety of wildflowers including Padre's shooting star (*Primula clevelandii* var. *gracilis*), purple Chinese houses (*Collinsia heterophylla*), canyon nemophila (*Nemophila heterophylla*), common woodland star (*Lithophragma affine*), California saxifrage (*Micranthes californica*), white plectritis (*Plectritis macrosera*), milk maids (*Cardamine californica*), and lesser baby innocence (*Tonella tenella*).

Mulefat Series

The mulefat series, totaling 0.15 ac, occurs along an unnamed ephemeral tributary originating from a stock pond south of the BSA. The overstory in this community is dominated by mulefat, with an understory of California mugwort and rabbitsfoot grass (*Polypogon monspeliensis*).

Riverine

Riverine areas, totaling 0.05 ac, are associated with unvegetated open water areas of Tres Pinos Creek lined with concrete and include areas underneath the existing bridge and the low-water crossing to the north.

Riverine Wetlands

Riverine wetlands, totaling 0.37 ac, include the Tres Pinos Creek channel and the unnamed ephemeral tributary, minus the riverine areas described previously. This community includes the flowing channel of Tres Pinos Creek and the channel of the ephemeral tributary, and supports a variety of hydrophytic vegetation including arroyo willow, mulefat, bog rush (*Juncus effusus*), California mugwort, rabbitsfoot grass, water cress (*Nasturtium officinale*), floating water primrose (*Ludwigia peploides*), iris leaved rush (*Juncus xiphioides*), hyssop loosestrife (*Lythrum hyssopifolia*), California wild rose, Baltic rush (*Juncus balticus*), and fringed willowherb (*Epilobium ciliatum*).

Pasture

Pasture, totaling 0.01 ac, is a small sliver located in the northeast portion of the BSA. This vegetation community is likely former grassland and is regularly grazed by livestock. Plant species in this community are routinely grazed and were unidentifiable at the time of the field visit.

3.1.3.2. Description of Common Animal Species

The sections below discuss animal species observed and/or likely to occur within the BSA.

Mammals

No mammal species were observed during the site survey, but common species likely to occur in the BSA include coyote (*Canis latrans*), raccoon (*Procyon lotor*), striped skunk (*Mephitis mephitis*), California ground squirrel (*Spermophilus beecheyi*), opossum (*Didelphis virginiana*), and mule deer (*Odocoileus hemionus*).

Birds

Bird species observed during site surveys include wild turkey (*Meleagris gallopavo*), California quail (*Callipepla californica*), and western scrub jay (*Aphelocoma californica*). Other common bird species expected to occur in the BSA include California towhee (*Pipilo crissalis*), white-crowned sparrow (*Zonotrichia leucophrys*), great horned owl (*Bubo virginianus*), red-shouldered hawk (*Buteo lineatus*), band-tailed pigeon (*Columba fasciata*), western bluebird (*Sialia mexicana*), blue-gray gnatcatcher (*Polioptila caerulea*), acorn woodpecker (*Melanerpes formicivorus*), bushtit (*Psaltriparus minimus*),

American crow (*Corvus brachyrhynchos*), and Bewick's wren (*Thryomanes bewickii*).

Amphibians and Reptiles

The only amphibian species observed during the field surveys was potentially CRLF, three frogs though to be CRLF were observed directly downstream of the existing bridge during the May 2011 field surveys. Other common amphibian species likely to occur in the BSA include the Pacific chorus frog (*Pseudacris sierra*), and California toad (*Anaxyrus boreas halophilus*).

The only reptile species observed during the site survey was Pacific pond turtle (*Emys marmorata*), three individuals were observed 90 ft downstream of the BSA. Other reptile species likely to occur in the BSA include western terrestrial garter snake (*Thamnophis elegan elegans*), western rattlesnake (*Crotalus oreganus*), common gopher snake (*Pituophis catenifer*), and western fence lizard (*Sceloporus occidentalis*).

Fish

South Central California Coast steelhead (*Oncorhynchus mykiss*) (SCCC steelhead) fingerlings were observed in Tres Pinos Creek during the May 2011 field surveys.

3.1.3.3. Migration Corridors

Wildlife movement corridors are linear habitats that function to connect two or more areas of significant wildlife habitat. These corridors may function on a local level as links between small habitat patches (e.g., streams in urban settings) or may provide critical connections between regionally significant habitats (e.g., deer movement corridors). Wildlife corridors typically include vegetation and topography that facilitate the movements of wild animals from one area of suitable habitat to another in order to fulfill foraging, breeding, and territorial needs. These corridors often provide cover and protection from predators that may be lacking in surrounding habitats. Wildlife corridors generally include riparian zones and similar linear expanses of contiguous habitat.

Tres Pinos Creek is tributary to the San Benito River approximately 15 mi downstream of the BSA. It is joined by numerous tributaries along this reach. Tres Pinos Creek within the BSA is near the upper end of the watershed and provides a link between the foothill habitats and the habitats in the Hollister

Valley. Consequently, Tres Pinos Creek provides a potential movement corridor for smaller species of wildlife.

3.1.3.4. Aquatic Resources

Aquatic resources within the BSA consist of Tres Pinos Creek, its associated wetlands and willow riparian community, and a small, ephemeral tributary that originates from a stock pond south of the BSA. Tres Pinos Creek within the BSA is a perennial creek; in summer, it is fed primarily by an underground natural spring. Pooled areas occur in the channel directly adjacent to the Panoche Road Bridge structure where the water moves at a slower velocity than the rest of the channel. The creek bed is composed of bedrock, cobble, and sand. The creek flows northeast to southwest through the BSA.

A concrete low-water crossing is located on the north side of Panoche Road.

The potential wetlands in the BSA, as described above, are located along the length of Tres Pinos Creek (except under the existing bridge deck and the low-water crossing) and entire length of the ephemeral tributary. Vegetation within the wetland areas are dominated by a variety of hydrophytic species including arroyo willow, narrow leaved willow, mulefat, bog rush, California mugwort, gloating water primrose, iris leaved rush, hyssop loosestrife, California wild rose, Baltic rush, and fringed willowherb. Therefore, these areas meet ACOE vegetation criteria for wetlands.

Soils generally consisted of river rock and cobbles with pockets of sandy loam. Locations consisting of river rock and cobble (within Tres Pinos Creek) were considered naturally problematic making it difficult to identify hydric soil indicators. At these locations, hydric soil indicators were not used to evaluate wetland status. At the remaining locations within Tres Pinos Creek, color between sample points consisted of Munsell Moist 10YR 2/1 with redoximorphic concentrations of 7.5YR 3/4 at approximately 5 percent and Munsell Moist 10YR 3/2 with redoxomorphic concentrations of 7.5YR 4/6 at approximately 20 percent. These locations met the requirements of the Redox Dark Surface indicator for hydric soils. Soil indicators within the ephemeral tributary consisted of 10YR 3/2 cobbly sand. However, there was obvious reduction of soil chroma at this location compared to adjacent upland data points. Consequently, it is reasonable to presume the soils at these locations

are typically ponded or flooded for at least 7 days during the growing season, thus meeting the ACOE hydric soils criterion for wetlands.

The majority of the soils were either inundated or saturated during the field surveys; both inundation and saturation are primary hydrology indicators. Other hydrology indicators observed included water marks (non-riverine), drift deposits (non-riverine), water-stained leaves, and oxidized rhizospheres along living roots, which are primary indicators for hydrology, as well as drift deposits (riverine), which is a secondary indicator for hydrology. Based on the presence of these indicators, it is reasonable to presume that these areas are typically inundated and/or saturated to the surface for at least 14 days during the growing season, thus meeting the minimum ACOE hydrology criterion for wetlands.

Indicators used to determine the limits of the OHWM of Tres Pinos Creek and the ephemeral tributary included scour marks along the incised banks of channel, watermarks and vegetative drift deposits, and general topography of the area.

Aquatic features within the OHWM but not supporting wetlands were determined to be non-wetland waters.

As noted in Section 2.3, data collection occurred on July 6, 2011 and April 16, 2020; wetland data sheets are included in Appendix C. Figure 6 shows the potential jurisdictional waters in the BSA, which are also summarized in Table 3.

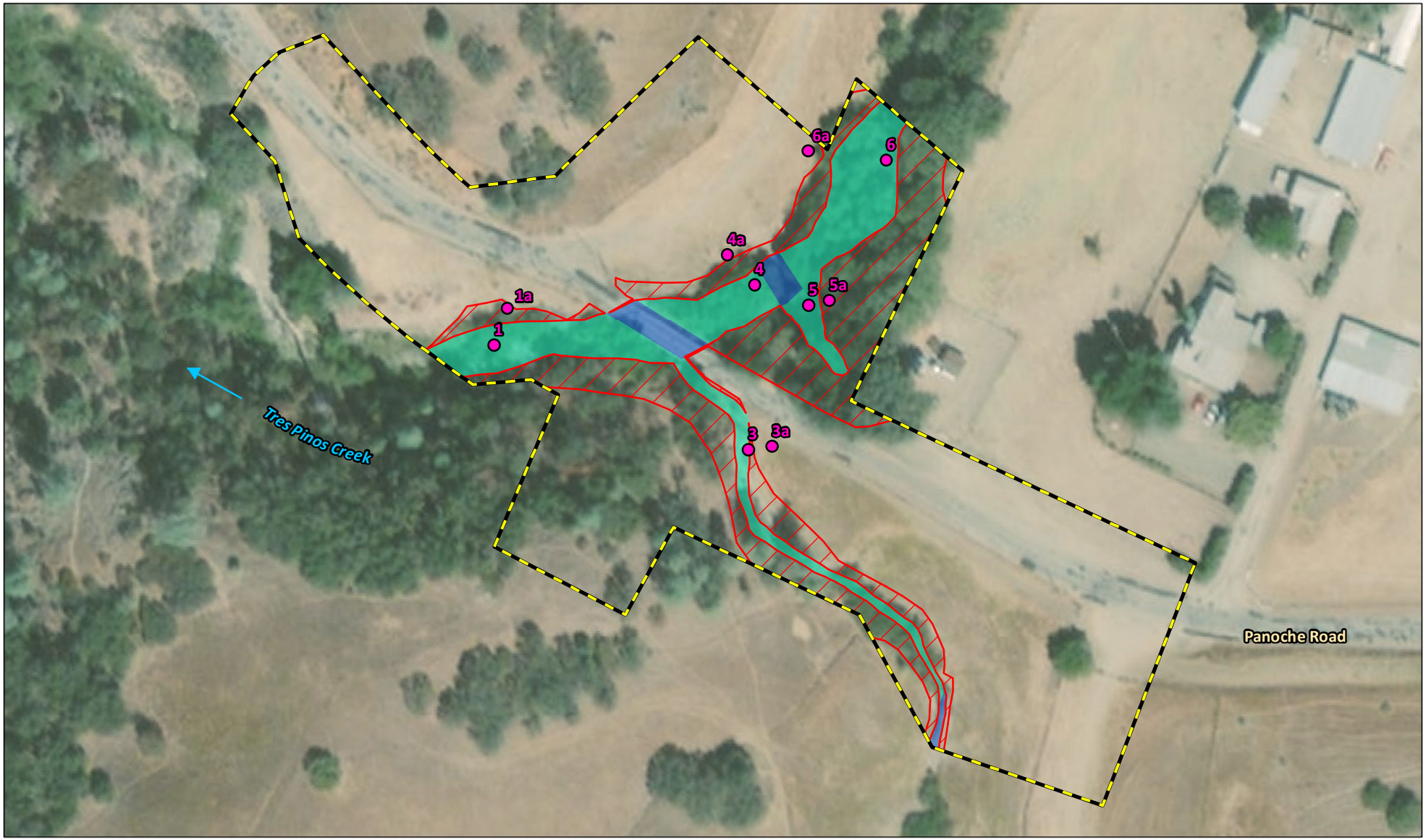

Caltrans

LEGEND

Biological Study Area - (3.66 ac)

Data Point

Riparian Habitat - (0.61 ac)

Potential Jurisdictional Waters of the U.S. - (0.42 ac)

Wetlands - (0.37 ac)

Non-Wetland Waters - (0.05 ac)

0 50 100
FEET

FIGURE 6

Panoche Road Bridge (No. 43C0027) over
Tres Pinos Creek Replacement Project
San Benito County, California; Caltrans District 5
Federal Project No. BRLO-5943(056)

Potential Jurisdictional Waters

SOURCE: Basemap - ESRI World Imagery (10/2018); Mapping - LSA (10/2020)

I:\QCE2001\GIS\Reports\NES\NES_Fig6_Juris_wtrs.mxd (10/29/2020)

Table 3: Potential Jurisdictional Waters in the BSA (acres)

Features	Area
Wetland Waters of the U.S.	
Tres Pinos Creek	0.31
Ephemeral Tributary	0.06
Subtotal Wetlands	***0.37***
Non-wetland Waters of the U.S.	
Tres Pinos Creek	0.05
Subtotal Non-wetlands	***0.05***
Total Waters of the U.S.	**0.42**
CDFW 1602 Waters	
Arroyo Willow Series	0.41
Mulefat Series	0.15
Total CDFW 1602 Waters[1]	**0.61**

[1] CDFW 1602 Waters include all potential waters of the U.S. and adjacent riparian areas.

The aquatic resources within the BSA described above are expected to be under the jurisdiction of ACOE, RWQCB, and CDFW.

3.1.3.5. Invasive Species

Many non-native species have been part of the California landscape for the past 150 years. Some of these introduced species are invasive, such as slender oat, soft brome, and foxtail barley, and are present in the California annual grassland community within the BSA; however, these species are primarily annual or biennial, and are at most moderately invasive. No serious invasive species (e.g., yellow star thistle [*Centauria solstitialis*], giant reed grass [*Arundo donax*]) were observed in the BSA.

3.2. Regional Species and Habitats of Concern

Table 4 provides a list of special status species that could potentially occur in the region, and therefore in the BSA; this list was compiled as described in Section 2.2.1. A review was conducted of the specific habitats required by each species listed in Table 4, and the specific habitats and habitat conditions present in the BSA. Based on this evaluation, it was determined whether the

species listed in Table 4 had potential to occur in the BSA. Special status species that were observed, or determined to potentially occur in the BSA based on availability of suitable habitat or other factors such as plucking posts, scat, nests, dens, etc., are discussed more fully in Sections 4.2 and 4.3 of this report. Species determined unlikely to occur in the BSA based on these same factors are documented accordingly in the table and not discussed further in this report.

Table 4: Special Status Species Potentially Occurring in the Panoche Road Bridge Biological Study Area

Scientific Name	Common Name	Status	Habitat Requirements	Habitat Present /Absent	Rationale
Mammals					
Ammospermophilus nelsoni	Nelson's (= San Joaquin) antelope squirrel	ST	Permanent resident of the western San Joaquin Valley from 200 – 1200 ft elevation in open, flat to gently sloping land with widely scattered shrubs and sparse distribution of grasses in sandy or loam soils. Uses kangaroo rat burrows or digs own burrows. Found from southern Merced County, south to Kern, Kings, and Tulare Counties. Also occurs in portions of eastern San Luis Obispo County.	A	BSA is not in range of the species. BSA is in the Diablo mountain range; all records for this species in the region are farther east, on the western side of the San Joaquin Valley.
Corynorhinus townsendii	Townsend's big-eared bat	CSC	Found in variety of habitats, including grassland, chaparral, woodland, and forest. Most common in open, dry mesic habitats. Roosts in caves, tunnels, mines, and buildings. Roosting sites are the most important limiting resource.	A	Although suitable foraging habitat for this species is present, there are no suitable roosting sites in the vicinity of the BSA.
Dipodomys ingens	Giant kangaroo rat	FE; SE	Annual grasslands on the western side of the San Joaquin Valley; marginal habitat in alkali scrub; require terrain below 20 degree-slope and sandy loam soils for burrowing.	A	BSA not in range of species. BSA is in the Diablo mountain range; all records for this species in the region are farther east, in the Panoche Hills and the Ciervo Hills, on the western side of the San Joaquin Valley.
Dipodomys venustus elephantinus	Big-eared kangaroo rat	CSC	Smallest geographic range of all *Dipodomys*; limited to southern part of Gabilan mountain range in San Benito & Monterey counties. Found most often in chamise chaparral. Slopes or flats with friable soil suitable for burrowing. Extant population in Pinnacles National Monument.	A	Habitat not present in BSA. No chamise chaparral present.

Scientific Name	Common Name	Status	Habitat Requirements	Habitat Present /Absent	Rationale
Onychomus torridus tularensis	Tulare grasshopper mouse	CSC	Open, low scrub and shrub habitats in desert areas. Possibly extirpated from San Joaquin Valley floor. Extant populations in western Kern Co., Carrizo Plains in San Luis Obispo Co., and uncommon in Diablo Ranges in Fresno, Kings, and Kern Counties.	A	BSA not in range of species. All records for this species in the region are farther east, in the lower Panoche Hills and the lower Ciervo Hills. The closest record is in the Panoche valley, over 9 mi east of the BSA
Vulpes macrotis mutica	San Joaquin kit fox	FE; ST	Annual grasslands or grassy open stages with scattered vegetation; need loose-textured soils for burrowing, and a suitable prey base.	A	BSA not in range of species. Nearest edge of species range is east of BSA. A few records are from Panoche Valley, and are approximately 9 mi east of the BSA. Most records in region are from west edge of the San Joaquin Valley.
Birds					
Accipiter cooperii	Cooper's hawk	WL (nesting)	Forages in broken woodland and habitat edges; nest sites mainly in riparian growths of deciduous trees, as in canyon bottoms or river flood-plains; also live oaks.	HP	BSA provides foraging habitat and marginally suitable nesting habitat. See discussion in Section 4.3.1.
Asio otus	Long-eared owl	CSC	Dense cover for roosting and nesting: riparian, live oak, or other thickets with small, densely canopied trees. Usually hunts in open areas; may be found in parks, orchards, farm woodlands. Diet is mainly rodents. Uses stick nests built by other species – crow, magpie, hawk, squirrel.	A	Habitat not present in BSA. There are no dense thickets present.
Athene cunicularia	Western burrowing owl	CSC	Burrow sites in open, dry, annual or perennial grasslands, deserts, and scrublands characterized by low-growing vegetation. Subterranean nester, dependent upon burrowing mammals, most notably, California ground squirrel.	HP	BSA may be used for foraging but does not provide suitable nesting habitat (i.e., no suitable burrows are present). See discussion in Section 4.3.2.

Scientific Name	Common Name	Status	Habitat Requirements	Habitat Present /Absent	Rationale
Charadrius montanus	Mountain plover	CSC (wintering)	Winters in short grasslands, freshly plowed fields, newly sprouting grain fields, and sometimes sod farms. Prefers short vegetation, bare ground and flat topography. Prefers grazed areas and areas with burrowing rodents.	A	Habitat not present. BSA does not provide flat topography; the grassland is relatively small and isolated. Wintering populations in the area utilize the Panoche Valley, approximately 11 mi east of the BSA.
Elanus leucurus	White-tailed kite	SFP	Nests on rolling foothills/valley margins with scattered oaks and river bottomlands or marshes next to deciduous woodlands. Found in open grasslands, meadows, or marshes for foraging close to isolated, dense-topped trees for nesting and perching.	A	Habitat not present. BSA is in low mountains, is 11 mi or more from a valley; no meadows or marshes are present. Grassland is relatively isolated.
Empidonax traillii extimus	Southwestern willow flycatcher	FE	Breeds in dense riparian habitats along rivers, streams, lakesides, or other wetlands. Breeding range in California is from Santa Ynez River south. Likely to winter in Mexico and Central America.	A	BSA is outside the range of this species. The Santa Ynez River is in Santa Barbara County.
Falco mexicanus	Prairie falcon	SWL	Nests on cliffs in dry, open terrain. Forages in open areas including grasslands, rangeland, savannahs, desert scrub, and some agricultural fields.	HP	BSA provides potential foraging habitat. See discussion in Section 4.3.3.
Falco peregrinus anatum	American peregrine falcon	SFP	Forages in marshes and grasslands near lakes and rivers. Nesting habitat includes high, protected cliffs and ledges near water.	A	Habitat not present. BSA does not contain marshes or grasslands near a large enough water body to provide suitable foraging habitat; no cliffs or ledges are present in the BSA.
Gymnogyps californianus	California condor	FE; SE	Vast expanses of open savannah, grasslands, and foothill chaparral in mountain ranges of moderate altitude; nest in deep canyons containing clefts in rocky walls, foraging up to 100 mi from roost/nest.	A	Habitat not present. BSA does not provide vast expanse of open grassland; no deep canyons or rocky walls are present in BSA.

Scientific Name	Common Name	Status	Habitat Requirements	Habitat Present /Absent	Rationale
Vireo bellii pusillus	Least Bell's vireo	FE	Summer resident (nesting) of California in low riparian habitat, or in dry river bottoms; below elevations of 2,000 ft. Needs structurally diverse canopy for foraging and dense shrub cover for nesting, often in the active floodplain of a waterway.	A	The small fragment of arroyo willow habitat within the BSA is outside the range of this species. The nearest CNDDB record is dated 2001 and is from over 30 mi north/northwest of the BSA. A search of all contiguous counties resulted in one additional record for least Bell's vireo, over 50 mi south of the BSA in southern Monterey County.
Reptiles					
Anniella pulchra	Northern California legless lizard	CSC	Occurs in coastal dune, valley-foothill, chaparral, and coastal scrub habitats in the San Joaquin Valley from San Joaquin County south. Requires sandy or loose organic soils or areas with plenty of leaf litter.	A	Habitat not present. BSA is not located in the San Joaquin Valley.
Emys marmorata	Pacific pond turtle	CSC	Occurs in permanent or nearly permanent water sources, ponds, marshes, rivers, streams and irrigation ditches with emergent vegetation and basking sites. Lay eggs in upland habitat consisting of sandy banks or grassy, open fields.	HP	Suitable habitat for this species is present in the BSA. Additionally, pond turtles were observed approximately 90 ft downstream of the BSA in a ponded area of Tres Pinos Creek. See discussion in Section 4.3.4.
Gambelia sila	Blunt-nosed leopard lizard	FE, SE	Alkali flats, chenopod scrub, valley saltbush scrub, washes, and open, sparsely vegetated areas in the San Joaquin Valley and nearby valleys and foothills. From 100 – 2,400 ft. Prefers flat areas with open space for running. Not found in densely vegetated or heavily degraded areas.	A	Habitat not present. Though the BSA is partially on flat ground, it is isolated from any other potential habitat, with no migration corridor. Areas of the BSA that are sparsely vegetated are next to roads. Remaining area is riparian and densely vegetated. This species has a very limited distribution on the Valley floor and in the foothills of the Coast Range. All records of this species are from larger valley areas.
Masticophis flagellum ruddocki	San Joaquin whipsnake	CSC	Open, dry habitats with little or no tree cover; valley grassland and saltbush scrub. May occur up to 2,900 ft.	HP	Habitat is present in BSA. See discussion in Section 4.3.5.

Scientific Name	Common Name	Status	Habitat Requirements	Habitat Present /Absent	Rationale
Phrynosoma blainvillii	Coast horned lizard	CSC	Found in a wide variety of habitats in open areas of sandy soil washes with scattered shrubs with sparse vegetation in valleys, foothills, and semi-arid mountains from 0 to 8,000 ft. Needs open areas for sunning, bushes for cover, patches of loose soil for burial, and abundant supply of insects.	HP	Habitat is present in BSA. See discussion in Section 4.3.6.
Amphibians					
Ambystoma californiense	California tiger salamander	FT, ST	Most commonly found in grasslands or open woodland habitats. Lives in vacant or mammal-occupied burrows (e.g., California ground squirrel, valley pocket gopher), and occasionally other underground retreats, throughout most of the year. Lays eggs on submerged stems and leaves, usually in shallow ephemeral or semi-permanent pools and ponds that fill during heavy winter rains, sometimes in permanent ponds.	A	Habitat not present in the BSA. Not observed during surveys. Closest CNDDB record is from 2000 and is located 7.6 mi west of the BSA. While potential breeding ponds are located within 1.24 mi of the BSA, the average distance of these ponds from the BSA (approximately 0.78 mi) combined with the steep terrain in all directions from the BSA limit the potential for CTS to migrate into the BSA.
Rana boylii	Foothill yellow-legged frog	SC, CSC	Partly-shaded, shallow streams and riffles with a rocky (at least some cobble-sized) substrate for egg-laying, and with water for at least 15 weeks until metamorphosis.	A	Suitable habitat is present in the BSA, however this species is considered extirpated from the region. There are 4 CNDDB records within 10 mi of the BSA, the nearest of which is located 0.25 mi west of the BSA in Tres Pinos Creek. All 4 occurrences are considered extirpated, and most recent was last documented in 1953.
Rana draytonii	California red-legged frog	FT, CSC	Lowlands and foothills in or near permanent sources of deep water with dense, shrubby or emergent riparian vegetation; also requires uplands for estivation.	HP	Suitable habitat is present in the BSA; species observed in the BSA. See discussion in Section 4.3.8.

Scientific Name	Common Name	Status	Habitat Requirements	Habitat Present /Absent	Rationale
Spea hammondii	Western spadefoot toad	CSC	Occurs in prairies, grasslands, valley-foothill woodlands; also in wide variety of other habitats with open areas and sandy or gravelly soils. Uses ephemeral drainages, seasonally ponded water, and vernal pools for breeding and egg-laying.	A	Habitat not present in BSA. No vernal pools within or near BSA.
Fish					
Hypomesus transpacificus	Delta smelt	FT	Sacramento-San Joaquin delta. Seasonally in Suisun bay, Carquinez strait, and San Pablo bay. Seldom found at salinites greater than 10 ppt. Most often in salinities less than 2 ppt.	A	BSA is outside the range of this species.
Oncorhynchus mykiss	South Central California Coast steelhead	FT	Coastal drainages from the Pajaro River south to, but not including, the Santa Maria River.	HP	This species is known to occur intermittently in the reach of Tres Pinos Creek in the BSA; species observed in the BSA. See discussion in Section 4.3.9.
Invertebrates					
Branchinecta conservatio	Conservancy fairy shrimp	FE	Endemic to California and is known to occur in several disjunct populations ranging from Tehama to Ventura counties. The Conservancy fairy shrimp occurs in vernal pools found on several different landforms, geologic formations and soil types. They have been observed in vernal pools ranging in size from 323 to 3,834,675 square ft. Observations suggest this species often is found in pools that are relatively large, and turbid.	A	Habitat not present; no seasonal pools in the BSA.
Branchinecta lynchi	Vernal pool fairy shrimp	FT	Endemic to the grasslands of the Central Valley, Central Coast Mountains and South Coast Mountains. Typically associated with small, shallow vernal pools with relatively short periods of inundation. Found in larger pools in southern extent of range.	A	Habitat not present; no seasonal pools in the BSA.

Scientific Name	Common Name	Status	Habitat Requirements	Habitat Present /Absent	Rationale
Desmocerus californicus dimorphus	Valley elderberry longhorn beetle	FT	Occurs only in the Central Valley of California, in association with blue elderberry (*Sambucus mexicana*). Prefers branches greater than 1inch in diameter.	A	BSA is outside the range of this species.
Lepidurus packardi	Vernal pool tadpole shrimp	FE	Found in a variety of natural, and artificial, seasonally ponded habitat types including: vernal pools, swales, ephemeral drainages, stock ponds, reservoirs, ditches, backhoe pits, and ruts caused by vehicular activities.	A	Habitat not present; no seasonal pools in the BSA.
Plants					
Acanthomintha lanceolata	Santa Clara thorn-mint	List 4.2	Occurs in rock outcrops, chaparral, cismontane woodland and coastal scrub, generally on serpentine (260 – 2,900ft). Blooms March – June.	A	Habitat not present. No serpentine in BSA.
Acanthomintha obovata ssp. *obovata*	San Benito thorn-mint	List 4.2	Occurs in chaparral, cismontane woodland and grassland habitats associated with heavy clay, alkaline, and serpentinite soils (1,300 – 5,000 ft). Blooms April – July.	A	Habitat not present. No alkaline or serpentinite soils present in the BSA.
Allium howellii var. howellii	Howell's onion	List 4.3	Perennial bulb found on grassy slopes in serpentine soils in valley grassland and foothill woodland (656 – 2953 ft). Blooms April – June.	A	Focused surveys were conducted for this species in the BSA during the normal blooming period with negative results. Consequently, this species is considered absent from the BSA.
Androsace elongata spp. *acute*	California androsace	List 4.2	Highly localized and often overlooked; many occurrences extirpated. Very rare in Southern California. Occurs in chaparral, foothill woodland, northern coastal scrub and meadow and seep habitats from 500 – 4,000 ft. Blooms March – June.	A	Focused surveys were conducted for this species in the BSA during the normal blooming period with negative results. Consequently, this species is considered absent from the BSA.
Arenaria paludicola	Marsh sandwort	FE, List 1B.1	Occurs in freshwater wetlands, often wet meadows and marshes (below 984 ft). Blooms May – August.	A	Focused surveys were conducted for this species in the BSA during the normal blooming period with negative results. Consequently, this species is considered absent from the BSA.

Scientific Name	Common Name	Status	Habitat Requirements	Habitat Present /Absent	Rationale
Astragalus macrodon	Salinas milk-vetch	List 4.3	Occurs in sandstone and shale, within chaparral openings and valley and foothill grasslands. Blooms April – July.	A	Habitat not present. No sandstone or shale is present in BSA.
Benitoa occidentalis	Western lessingia	List 4.3	Chaparral, valley grassland, foothill woodland and northern coastal scrub communities on vertic clay, occasionally serpentine soils (1148 – 3609 ft). Blooms May – November.	A	Focused surveys were conducted for this species in the BSA during the normal blooming period with negative results. Consequently, this species is considered absent from the BSA.
Calystegia collina spp. *venusta*	South coast range morning glory	List 4.3	Occurs in chaparral, cistmontane woodland, and valley and foothill grasslands (425 – 1,490 ft). Blooms April – June.	A	Habitat not present. The elevation of the BSA is 1,800 ft which is above the range for this species.
Camissonia benitensis	San Benito evening-primrose	FT, List 1B.1	Valley and foothill woodland, chaparral, montane woodland, on serpentinite alluvium, clay, or gravelly soils (2,000-4,200 ft). Blooms April-June.	A	Focused surveys were conducted for this species in the BSA during the normal blooming period with negative results. Consequently, this species is considered absent from the BSA.
Campanula exigua	Chaparral harebell	List 1B.2	Rocky chaparral areas, often serpentine soils; (900 – 4,100 ft). Blooms May – June.	A	Focused surveys were conducted for this species in the BSA during the normal blooming period with negative results. Consequently, this species is considered absent from the BSA.
Chorizanthe biloba var. immemora	Hernandez spineflower	List 1B.2	Annual herb found in serpentine, gravel, and vertic clay in chaparral and foothill woodlands (1968 – 2625 ft). Blooms May – August.	A	Focused surveys were conducted for this species in the BSA during the normal blooming period with negative results. Consequently, this species is considered absent from the BSA.
Chorizanthe douglasii	Douglas' spineflower	List 4.3	Annual herb found in sandy/gravelly soil in chaparral, cismontane woodland, coastal scrub and lower montane coniferous forest (180 – 5,300 ft). Blooms April – July.	A	Focused surveys were conducted for this species in the BSA during the normal blooming period with negative results. Consequently, this species is considered absent from the BSA.

Scientific Name	Common Name	Status	Habitat Requirements	Habitat Present /Absent	Rationale
Clarkia breweri	Brewer's clarkia	List 4.2	Chaparral, foothill woodland, northern coastal scrub on talus, occasionally serpentine soils (below 3280 ft). Blooms April – June.	A	Focused surveys were conducted for this species in the BSA during the normal blooming period with negative results. Consequently, this species is considered absent from the BSA.
Clarkia lewisii	Lewis' clarkia	List 4.3	Chaparral, foothill woodland, northern coastal scrub (below 985 ft). Blooms May – July.	A	Focused surveys were conducted for this species in the BSA during the normal blooming period with negative results. Consequently, this species is considered absent from the BSA.
Cryptantha rattanii	Rattan's cryptantha	List 4.3	Found on rocky, gravelly sloped in valley grassland and foothill woodland. Occasionally found in coastal scrub or chaparral (492 – 2559 ft). Blooms April – July.	A	Focused surveys were conducted for this species in the BSA during the normal blooming period with negative results. Consequently, this species is considered absent from the BSA.
Delphinium californicum ssp. *interius*	Hospital Canyon larkspur	List 1B.2	Wet, boggy meadows, openings in chaparral, and in canyons of cismontane woodland and chaparral (750 – 3600 ft). Blooms April – June.	A	Focused surveys were conducted for this species in the BSA during the normal blooming period with negative results. Consequently, this species is considered absent from the BSA.
Delphinium recurvatum	Recurved larkspur	List 1B.2	Perennial. Alkaline valley foothill grassland, chenopod scrub, cismontane woodlands (10 – 2,500 ft). Blooms March – May.	A	Focused surveys were conducted for this species in the BSA during the normal blooming period with negative results. Consequently, this species is considered absent from the BSA.
Erigonum elegans	Elegant wild buckwheat	List 4.3	Cistamone woodland, valley and foothill grassland. Occurs mostly on sandy or gravely roadsides. (650 – 3,900 ft) Blooms May – November.	A	Focused surveys were conducted for this species in the BSA during the normal blooming period with negative results. Consequently, this species is considered absent from the BSA.
Eriogonum heermannii var. occidentale	Western Heermann's buckwheat	List 1B.2	Gravel bars and steep clay slopes in foothill woodlands, often on serpentine (328 – 3,280 ft). Blooms July – October.	A	Focused surveys were conducted for this species in the BSA during the normal blooming period with negative results. Consequently, this species is considered absent from the BSA.

Scientific Name	Common Name	Status	Habitat Requirements	Habitat Present /Absent	Rationale
Eriogonum nortonii	Pinnacles buckwheat	List 1B.3	Chaparral, valley and foothill grassland. Sandy soils, often on recent burns (1,000 – 3,200 ft). Blooms May – September.	A	Focused surveys were conducted for this species in the BSA during the normal blooming period with negative results. Consequently, this species is considered absent from the BSA.
Lagophylla diabolensis	Diablo Range hare-leaf	List 1B.2	Annual herb found in grassy openings on vertic clay soils in valley grassland and foothill woodlands (1148 – 3511 ft). Blooms April – August.	A	Focused surveys were conducted for this species in the BSA during the normal blooming period with negative results. Consequently, this species is considered absent from the BSA.
Layia munzii	Munz's tidy-tips	List 1B.2	Valley and foothill grassland; chenopod scrub (500 – 2,300 ft). Blooms March – April.	A	Focused surveys were conducted for this species in the BSA during the normal blooming period with negative results. Consequently, this species is considered absent from the BSA.
Lepidium jaredii ssp. album	Panoche pepper-grass	List 1B.2	Valley and foothill grassland; steep slopes, clay soils (600 – 900 ft). Blooms February – June.	A	Habitat not present. Elevation of BSA is 1,800 ft, which is well above the elevation range of this species.
Madia radiata	Showy golden madia	List 1B.1	Valley and foothill grassland, chenopod scrub, cismontane woodland. Occurs mostly on adobe clay in grassland or among shrubs (80 – 2950 ft). Blooms March – May.	A	Focused surveys were conducted for this species in the BSA during the normal blooming period with negative results. Consequently, this species is considered absent from the BSA.
Malacothamnus aboriginum	Indian Valley bush-mallow	List 1B.2	Chaparral, montane woodland, in rocky, granitic, or burned areas (500 – 5,600 ft). Blooms April – October.	A	Focused surveys were conducted for this species in the BSA during the normal blooming period with negative results. Consequently, this species is considered absent from the BSA.
Microseris paludosa	Marsh microseris	List 1B.2	Valley and foothill grasslands. Also cismontane woodland, coastal scrub, and openings in closed-cone coniferous forest (0 – 1,000 ft). Blooms April – June.	A	Elevation of BSA is 1,800 ft, which is well above the elevation range of this species.
Monolopia congdonii	San Joaquin wooly-threads	FE, List 1B.2	Sandy grassland, alkali sink, chenopod scrub (200 – 2,600 ft). Blooms February – May.	A	Habitat not present. BSA is not in an alkali area.

Scientific Name	Common Name	Status	Habitat Requirements	Habitat Present /Absent	Rationale
Navarretia nigelliformis ssp. nigelliformis	Adobe navarretia	List 4.2	Found in vernal pools and clay depressions in wetland-riparian habitats (32 – 3280 ft). Blooms April – June.	A	Habitat not present. BSA does not contain vernal pools or similar clay depressions.
Navarretia nigelliformis ssp. *radians*	Shining navarretia	List 1B.2	Valley and foothill grassland, montane woodland, and vernal pools (200 – 3,300 ft). Blooms April – July.	A	Focused surveys were conducted for this species in the BSA during the normal blooming period with negative results. Consequently, this species is considered absent from the BSA.
Navarretia panochensis	Panoche navarretia	List 1B.3	Annual herb endemic to the Panoche Hills. Blooms April – June.	A	Focused surveys were conducted for this species in the BSA during the normal blooming period with negative results. Consequently, this species is considered absent from the BSA.
Nemacladus secundiflorus var. *robbinsii*	Robbins' nemacladus	List 1B.2	Openings in chaparral and valley and foothill grassland (1,100 – 5,600 ft). Blooms April – June.	A	Focused surveys were conducted for this species in the BSA during the normal blooming period with negative results. Consequently, this species is considered absent from the BSA.
Plagiobothrys uncinatus	Hooked popcorn-flower	List 1B.2	Chaparral, valley and foothill grassland, montane woodland (1,000 – 2,500 ft). Blooms April – May.	A	Focused surveys were conducted for this species in the BSA during the normal blooming period with negative results. Consequently, this species is considered absent from the BSA.
Senecio aphanactis	Chaparral ragwort	List 2B.2	Chaparral, montane woodland, coastal scrub, sometimes on alkaline soils; 50 – 2,600 ft. Blooms January – April.	A	Focused surveys were conducted for this species in the BSA during the normal blooming period with negative results. Consequently, this species is considered absent from the BSA.
Streptanthus insignis ssp. *lyonii*	Arburua Ranch jewel-flower	List 1B.2	Coastal scrub, sometimes on serpentinite (700 – 2,800 ft). Blooms March – May. Known from fewer than 10 occurrences.	A	Habitat not present. No coastal scrub in the BSA.

Status Codes

Federal
FE: Federally listed; Endangered
FT: Federally listed, Threatened

California Rare Plant Rank:
List 1A: Plants presumed extinct in California.
List 1B: Plants rare and endangered in California and throughout their range.

FPE: Federally Proposed for Listing as Endangered
range.
FPT: Federally Proposed for Listing as Threatened
FC: Federal Candidate **0.1:** Plants seriously threatened in California

List 2: Plants rare, threatened or endangered in California but more common elsewhere in their
List 3: Plants about which we need more information; a review list.
List 4: Plants of limited distribution; a watch list.

0.2: Plants fairly threatened in California
0.3: Plants not very threatened in California

NMFS SC: National Marine Fisheries Service Species of Concern

State
ST: State listed; Threatened
SE: State listed; Endangered
SFP: State Fully Protected
SC: State Candidate
SWL: State Watch List
CSC: California Species of Special Concern

Habitat Presence:
HP: Habitat is, or may be present
SP: Species is present
A: No habitat present and no further work needed
CH: Project footprint is located within a designated critical habitat unit.

CA SA: Special Animal: General term that refers to taxa that the CNDDB is interested in tracking regardless of legal or protection status: Includes the following categories in addition to those listed above:

- Taxa which meet the criteria for listing, even if not currently included on any list, as described in Section 15380 of the California Environmental Quality Act Guidelines.
- Taxa that are biologically rare, very restricted in distribution, declining throughout their range, or have a critical, vulnerable stage in their life cycle that warrants monitoring.
- Populations in California that may be on the periphery of a taxon's range, but are threatened with extirpation in California.
- Taxa closely associated with a habitat that is declining in California at an alarming rate (e.g., wetlands, riparian, old growth forests, desert aquatic systems, native grasslands, vernal pools, etc.)
- Taxa designated as a special status, sensitive, or declining species by other state or federal agencies, or non-governmental organization (NGO).

Chapter 4. Results: Biological Resources, Discussion of Impacts and Mitigation

This section provides a discussion of biological resources present in the BSA and potential impacts to those resources resulting from project implementation. Impacts to vegetation communities are based on the project footprint, which includes permanent and temporary impacts totaling 1.40 ac. Existing developed and/or paved areas are excluded from this total.

Table 5 summarizes permanent (0.64 ac) and temporary (0.76 ac) impacts to all vegetation communities within the BSA.

Table 5: Permanent and Temporary Impacts to Vegetation Communities

Natural Community/ Land Use	Impacts (acres)	
	Permanent	**Temporary**
Natural Communities		
Arroyo Willow Series	0.19	0.07
California Annual Grassland Series	0.23	0.45
Mixed Oak Series	0.09	0.08
Mulefat Series	0.03	0.02
Riverine	0.01	0.02
Riverine Wetlands	0.09	0.12
Subtotal Natural Communities	***0.64***	***0.76***
Land Uses		
Pasture	–	–
Subtotal Land Uses	***0.00***	***0.00***
TOTAL	**0.64**	**0.76**

4.1. Habitats and Natural Communities of Special Concern

The BSA includes one formally designated natural community of special concern: arroyo willow series. The BSA also supports one sensitive natural community: riverine wetlands. Both communities are associated with Tres Pinos Creek; the riverine wetlands also extend southeast from the creek within the unnamed ephemeral tributary. Riparian communities and wetlands are both considered sensitive under CEQA and may be regulated by CDFW

pursuant to Section 1602 of the California Fish and Game Code, as described in Section. 2.1.2.3. Riparian communities and wetlands may also be regulated by the ACOE and/or RWQCB if the community is determined to be waters of the U.S., or waters of the State, as described in Sections. 2.1.2.1. and 2.1.2.2. Potential permitting requirements for impacts to these resources are discussed in Section 5.4.

The mixed oak series within the BSA contains several native oak trees, which are considered sensitive under CEQA. These trees are discussed in Section 4.1.5 to document removal of native trees.

4.1.1. Arroyo Willow Series

4.1.1.1. Survey Results

As described in Section 3.1.3.1., the arroyo willow series is located along Tres Pinos Creek. Arroyo willow and narrow-leaved willow are dominant and form a small thicket. Mulefat, blue elderberry, and Fremont cottonwood are also present. Poison hemlock, California rose, California gooseberry, common plantain, California mugwort, and yellow monkey flower are the primary understory species. This natural community totals 0.41 ac.

4.1.1.2. Project Impacts

The project will result in permanent impacts to 0.19 ac of arroyo willow series during installation of the new bridge. Temporary impacts, totaling 0.07 ac, will also occur as a result of cutting back of vegetation to provide access routes and disturbance from construction activities.

4.1.1.3. Avoidance and Minimization Efforts

1. Work in the live channel of Tres Pinos Creek (consisting of placement of RSP, support pier, and falsework) will be limited to the period of June 15 through October 15.

2. Brightly colored ESA fencing shall be placed along the limits of work to protect adjacent arroyo willow riparian habitat (Figure 7). Fencing shall be maintained in good condition for the duration of construction activities.

3. Staging areas, access routes, and construction areas shall be located outside of wetland and riparian areas to the maximum extent practicable.

LEGEND

- Biological Study Area - (3.66 ac)
- ESA Fencing
- Permanent Impact Area - (0.98 ac)
- Temporary Impact Area - (0.87 ac)

0 50 100
FEET

SOURCE: Basemap - ESRI World Imagery (10/2018); Mapping - LSA (10/2020)

I:\QCE2001\GIS\Reports\NES\NES_Fig7_ESA.mxd (10/29/2020)

FIGURE 7

Panoche Road Bridge (No. 43C0027) over
Tres Pinos Creek Replacement Project
San Benito County, California; Caltrans District 5
Federal Project No. BRLO-5943(056)

Project Impacts and ESA Fencing

4. During demolition of the existing bridge, a heavy tarp, temporary decking, or equivalent structure shall be placed beneath the bridge to collect debris falling from the bridge and prevent it from entering Tres Pinos Creek. This measure may also apply during construction of the new bridge deck. This measure only applies prior to dewatering of the channel.

5. Measures consistent with the current Caltrans' Construction Site Best Management Practices (BMP) Manual (including the Storm Water Pollution Prevention Plan and Water Pollution Control Plan [WPCP] Manuals) shall be implemented to minimize effects to arroyo willow riparian resulting from erosion, siltation, etc. during construction.

6. A SWPPP or WPCP will be prepared by the contractor in accordance with typical provisions associated with a Regional General Permit for Construction Activities (on file with the Central Coast RWQCB). The SWPPP or WPCP will contain a Spill Response Plan with instructions and procedures for reporting spills, the use and location of spill containment equipment, and the use and location of spill collection materials.

7. During placement of RSP, native topsoil from the channel will be incorporated within the RSP to provide a seeding and planting medium. Areas of RSP above the OHWM will be revegetated with the seed mix specified in Table 6. In addition, locally-obtained willow cuttings/poles will be installed within the lower sections of the RSP near the OHWM.

Table 6: Native Species Mix

Scientific Name	Common Name	Rate (pounds per acre)	Minimum Percent Germination
Artemisia douglasiana	Mugwort	2.0	50
Bromus carinatus	California brome	5.0	85
Elymus trachycaulus	Slender wheatgrass	2.0	60
Eschscholzia californica	California poppy	2.0	70
Festuca microstachys	Small fescue	10.0	80
Hordeum brachyantherum	California barley	2.0	80
Lupinus bicolor	Bicolored lupine	4.0	80

8. Following completion of the new bridge, all fill slopes, temporary impact and/or otherwise disturbed areas shall be restored to preconstruction contours (as appropriate) and revegetated with the native seed mix specified in Table 6. Invasive exotic plants will be controlled to the maximum extent practicable.

9. Removal of the existing bridge and subsequent revegetation of the area currently covered by the bridge will restore approximately 0.02 ac of riparian habitat.

10. Prior to issuance of a grading permit or other authorization to proceed with project construction, the project proponent shall obtain any regulatory permits that are required from the ACOE, RWQCB, and /or CDFW.

4.1.1.4. Compensatory Mitigation

The removal of arroyo willow riparian vegetation shall be compensated at a 3:1 ratio. Mitigation shall be accomplished using one of the following methods, or by using a combination of the methods, contingent upon approval by the CDFW, ACOE, and RWQCB:

- Preservation, creation, and/or restoration of the impacted resources at a minimum ratio of 3:1. This work would occur solely within the project impact area.

- Purchase of credits at an approved mitigation bank at a minimum 1:1 mitigation ratio.

4.1.1.5. Cumulative Effects

Impacts to arroyo willow riparian in the general vicinity of the project likely will occur through habitat loss during public works projects similar in scope to the subject project. Other projects in the region with similar impacts will also be required to minimize and/or mitigate those impacts. Considering the small area of impact, with implementation of the avoidance and minimization measures detailed above, the project will not substantially contribute to cumulative effects for arroyo willow riparian habitat.

4.1.2. Mulefat Series

4.1.2.1. Survey Results

As described in Section 3.1.3.1., the mulefat series is located along an unnamed ephemeral tributary originating from a stock pond south of the BSA. Mulefat dominates the overstory in this community, with California mugwort and rabbitsfoot grass being the primary understory species. This natural community totals 0.15 ac.

4.1.2.2. Project Impacts

The project will result in permanent impacts to 0.03 ac of mulefat series during installation of RSP. Temporary impacts, totaling 0.02 ac, will also occur as a result of cutting back of vegetation to provide access routes and disturbance from construction activities.

4.1.2.3. Avoidance and Minimization Efforts

The avoidance and minimization measures in Section 4.1.1.3 will be implemented to minimize impacts to mulefat series during and after construction.

4.1.2.4. Compensatory Mitigation

The removal of mulefat riparian vegetation shall be compensated at a 3:1 ratio. Mitigation shall be accomplished using one of the following methods, or

by using a combination of the methods, contingent upon approval by the CDFW, ACOE, and RWQCB:

- Preservation, creation, and/or restoration of the impacted resources at a minimum ratio of 3:1. This work would occur solely within the project impact area.
- Purchase of credits at an approved mitigation bank at a minimum 1:1 mitigation ratio.

4.1.2.5. Cumulative Effects

Impacts to mulefat riparian vegetation in the general vicinity of the project likely will occur through habitat loss during public works projects similar in scope to the subject project. Other projects in the region with similar impacts will also be required to minimize and/or mitigate those impacts. Considering the small area of impact, with implementation of the avoidance and minimization measures detailed above, the project will not substantially contribute to cumulative effects for mulefat riparian habitat.

4.1.3. Riverine

4.1.3.1. Survey Results

As described in Section 3.1.3.1, riverine areas in the BSA are associated with concrete-lined, unvegetated open water areas of Tres Pinos Creek and include areas underneath the existing bridge and the low-water crossing to the north. This natural community totals 0.05 ac.

4.1.3.2. Project Impacts

Permanent impacts to riverine, totaling 0.01 ac, will occur during installation of the new bridge. Temporary impacts, totaling 0.02 ac, will occur as a result of dewatering and temporary construction access.

4.1.3.3. Avoidance and Minimization Efforts

The avoidance and minimization measures in Section 4.1.1.3 will be implemented to minimize impacts to riverine areas during and after construction.

4.1.3.4. Compensatory Mitigation

Mitigation for permanent impacts to riverine areas shall be accomplished using the following method, contingent upon approval by the CDFW, ACOE, and/or RWQCB:

- Purchase of credits at an approved mitigation bank at a minimum 1:1 mitigation ratio.

4.1.3.5. Cumulative Effects

Impacts to riverine areas in the general vicinity of the project likely will occur through habitat loss during public works projects similar in scope to the subject project. Other projects in the region with similar impacts will also be required to minimize and/or mitigate those impacts. Considering the small area of impact, with implementation of the avoidance and minimization measures detailed above, the project will not substantially contribute to cumulative effects for riverine habitat.

4.1.4. Riverine Wetlands

4.1.4.1. Survey Results

As described in Section 3.1.3.1, riverine wetlands in the BSA are associated with Tres Pinos Creek and the unnamed ephemeral tributary. The wetlands are dominated by a variety of hydrophytic vegetation including arroyo willow, mulefat, bog rush, California mugwort, rabbitsfoot grass, water cress, floating water primrose, iris leaved rush, hyssop loosestrife, California wild rose, Baltic rush, and fringed willowherb. This natural community totals 0.37 ac.

4.1.4.2. Project Impacts

Permanent impacts to riverine wetlands, totaling 0.09 ac, will occur during installation of the new bridge. Temporary impacts, totaling 0.12 ac, will occur as a result of dewatering and temporary construction access.

Removal of the existing bridge and subsequent revegetation of the area currently covered by the bridge will restore approximately 0.02 ac of riverine wetland habitat.

4.1.4.3. Avoidance and Minimization Efforts

The avoidance and minimization measures in Section 4.1.1.3 will be implemented to minimize impacts to riverine wetlands during and after construction.

4.1.4.4. Compensatory Mitigation

Mitigation for permanent impacts to riverine wetlands shall be accomplished using the following method, contingent upon approval by the CDFW, ACOE, and/or RWQCB:

- Purchase of credits at an approved mitigation bank at a minimum 1:1 mitigation ratio.

4.1.4.5. Cumulative Effects

Impacts to riverine wetlands in the general vicinity of the project likely will occur through habitat loss during public works projects similar in scope to the subject project. Other project in the region with similar impacts will also be required to minimize and/or mitigate those impacts. Considering the small areas or permanent impact, with implementation of avoidance and minimization measures in Section 4.1.1.3, the project will not substantially contribute to cumulative effects for riverine wetlands.

4.1.5. Mixed Oak Series

4.1.5.1. Survey Results

As described in Section 3.1.3.1, the mixed oak series is located on the north-facing slope in the south central portion of the BSA. This community is comprised of a mix of valley oak and coast live oak species. Other representative species include Alvord oak, gray pine, California juniper, and an annual wildflower understory. This community totals 0.39 ac within the BSA.

4.1.5.2. Project Impacts

The project will result in the removal of 0.09 ac of mixed oak woodland vegetation, including two native oak trees (10 and 31 inches respectively), along the south shoulder of Panoche Road as a result of construction of the realigned new wider eastern bridge approach. Temporary impacts, totaling 0.08 ac, will also occur during temporary construction access.

4.1.5.3. Avoidance and Minimization Efforts

1. Brightly colored ESA fencing shall be placed along the limits of work to protect adjacent mixed oak woodland habitat (Figure 7). Fencing shall be maintained in good condition for the duration of construction activities.

2. Staging areas, access routes, and construction areas shall be located outside of oak woodland areas to the maximum extent practicable.

3. Following completion of the new bridge, all fill slopes, temporary impact and/or otherwise disturbed areas shall be restored to preconstruction contours (as appropriate) and revegetated with the native seed mix specified in Table 6. Invasive exotic plants will be controlled to the maximum extent practicable.

4.1.5.4. Compensatory Mitigation

The removal of mixed oak vegetation shall be compensated at a 3:1 ratio. Mitigation shall be accomplished using one of the following methods, or by using a combination of the methods, contingent upon approval by the CDFW, ACOE, and RWQCB:

- Preservation, creation, and/or restoration of the impacted resources at a minimum ratio of 3:1. This work would occur solely within the project impact area.

- Purchase of credits at an approved mitigation bank at a minimum 1:1 mitigation ratio.

All mitigation lands shall be protected in perpetuity through recordation of a conservation easement or equivalent method.

4.1.5.5. Cumulative Effects

Removal of mixed oak woodlands in the general vicinity of the project likely will occur through habitat loss during public works projects similar in scope to the subject project. Other projects in the region with similar impacts will also be required to minimize and/or mitigate those impacts. Considering the small area and temporary nature of impacts, implementation of the avoidance and minimization measures detailed above, the project will not substantially contribute to cumulative effects for mixed oak woodland habitat.

4.2. Special Status Plant Species

No special status plant species are expected to occur in the BSA; therefore, no impacts are expected to occur to special status plants.

4.3. Special Status Animal Species Occurrences

After evaluation of the special status wildlife species potentially occurring in the BSA, as shown in Table 4, the following wildlife species were determined to have a reasonable likelihood of occurring in the BSA and may be affected by the project.

4.3.1. Cooper's Hawk

Cooper's hawks (*Accipiter cooperii*) are on the CDFW watch list for nesting, but have no other formal status. In California, they are primarily year-long residents, and are found throughout most of the wooded portion of the State.

Cooper's hawks favor riparian areas and those near open water for nesting, and often use broken woodlands and habitat edges for hunting. Cooper's hawks are aerial specialists that primarily catch birds in flight. Prey may be chased through trees and thickets, or snatched from a perch. These hawks build stick nests in dense stands of live oak, riparian deciduous forest, and occasionally coniferous forest, usually near a stream. Birds are monogamous. Breeding season is March through August, with peak activity May through July. Young are dependent on adults for 30-40 days after fledging.

4.3.1.1. Survey Results

The CNDDB includes four records for Cooper's hawk within the record search area. The records are all over 10 mi to the southwest in Pinnacles National Monument. The BSA supports oaks and other trees that provide potential nesting habitat for Cooper's hawk. The arroyo willow series and habitat edges in and adjacent to the BSA provide potential foraging habitat. No Cooper's hawks were observed during any of the field visits; however, there is a possibility this species could occur.

4.3.1.2. Project Impacts

The project will result in permanent impacts to 0.19 ac and temporarily disturb 0.07 ac of arroyo willow habitat, which is potential foraging habitat for Cooper's hawk. Additionally, the project will remove 0.09 ac and temporarily disturb 0.08 ac of mixed oak habitat, which is potential nesting habitat for this species.

The project could also result in temporary impacts to Cooper's hawk attempting to nest in the vicinity of the project, as construction activities could potentially discourage nesting.

4.3.1.3. Avoidance and Minimization Efforts

The following avoidance and minimization measures are proposed to reduce any potential impacts to nesting Cooper's hawks:

1. If possible, all trees that will be impacted by project construction shall be removed during the non-nesting season (between September 16 and February 1), to avoid take of a nest or bird. If this is not possible, a survey for nesting Cooper's hawks shall be conducted in the BSA and within a 500 ft radius by a qualified biologist. The survey shall be conducted a maximum of 14 days prior to the start of construction. The survey area may be decreased due to property access constraints, etc.

2. If nesting Cooper's hawks are found within 500 ft of the BSA, a qualified biologist shall evaluate the potential for the proposed project to disturb nesting activities. The evaluation criteria shall include, but are not limited to, the location/orientation of the nest in the nest tree, the distance of the nest from the BSA, and line of sight between the nest and the BSA.

3. CDFW and Caltrans shall be contacted to review the evaluation and determine if the project can proceed without adversely affecting nesting activities.

4. If work is allowed to proceed, a qualified biologist shall be on-site weekly during construction activities that occur in breeding season to monitor nesting activity. The biologist shall have the authority to stop work if it is determined the project is adversely affecting nesting activities.

4.3.1.4. Compensatory Mitigation

No compensatory mitigation is proposed with the implementation of measures in Section 4.3.1.3.

4.3.1.5. Cumulative Effects

Impacts to Cooper's hawk in the general vicinity of the project likely will occur through habitat loss during public works projects similar in scope to the subject project. Other projects in the region with similar impacts will also be required to minimize and/or mitigate those impacts. Considering the amount of habitat available for this species in the region relative to the amount of habitat in the BSA, and implementation of the avoidance and minimization measures detailed above, the project will not substantially contribute to cumulative effects for Cooper's hawk.

4.3.2. Western Burrowing Owl

The western burrowing owl (*Athene cunicularia*) is a California species of concern. It has no federal status. Burrowing owls occur in warmer valleys, open, dry grasslands, deserts, and scrublands associated with agriculture and urban areas that support populations of California ground squirrels. Burrowing owls nest below ground, using abandoned burrows of other species (most commonly ground squirrel) and feed on insects and small mammals.

4.3.2.1. Survey Results

The CNDDB includes a single record for this species, dated 2002, from approximately 4 mi northwest of the BSA. The annual grassland within the BSA provides potential foraging habitat for the burrowing owl; however, no burrows of suitable size are present in the BSA, and no signs of owl presence were observed during the field visits. However, this species could occur in the BSA.

4.3.2.2. Project Impacts

The project will permanently impact 0.23 ac and temporarily disturb 0.45 ac of annual grassland habitat, which is potential foraging habitat for western burrowing owl. Permanent impacts will occur as a result of project cut and fill activities; temporary impacts will occur as a result of project staging during construction activities.

4.3.2.3. Avoidance and Minimization Efforts

The following avoidance and minimization measures will minimize any potential impacts to western burrowing owls:

1. Areas of annual grassland temporarily disturbed during construction shall be revegetated with the seed mix specified in Table 6.

4.3.2.4. Compensatory Mitigation

No compensatory mitigation is proposed with implementation of the measures included in Section 4.3.2.3.

4.3.2.5. Cumulative Effects

Impacts to western burrowing owls in the general vicinity of the project likely will occur through habitat loss during public works projects similar in scope to the subject project. Other projects in the region with similar impacts will also be required to minimize and/or mitigate those impacts. Considering the amount of foraging habitat available for this species in the region relative to the amount of foraging habitat in the BSA, and implementation of the avoidance and minimization measures detailed above, the project will not substantially contribute to cumulative effects for western burrowing owls.

4.3.3. Prairie Falcon

The prairie falcon (*Falco mexicanus*) is a California species of concern; it has no formal federal status. Prairie falcons inhabit dry, open terrain, either level or hilly. They forage in open areas such as grasslands, savannahs, desert scrub, and agricultural fields. Their diet consists primarily of small mammals and medium-sized birds; reptiles are also eaten. Prey may be captured in the air or on the ground. Nest locations are usually on a cliff overlooking a large, open area. Breeding season is February through mid-September, with peak activity in April to early August.

4.3.3.1. Survey Results

The prairie falcon is well-documented in the region; the CNDDB includes 15 records of this species within 10 mi of the BSA. The closest record is dated 1977 and is approximately 4 mi northwest of the BSA. More recent records within 10 mi of the BSA, dated 2008, are from approximately 9.5 mi southeast of the BSA.

There is no suitable nesting habitat for prairie falcons within the BSA, however, the annual grassland habitat in the BSA provides potential foraging habitat. This species could occur in the BSA.

4.3.3.2. Project Impacts

The project will permanently impact 0.23 ac and temporarily disturb 0.45 ac of annual grassland habitat, which is potential foraging habitat for prairie falcons. Permanent impacts will occur as a result of project cut and fill activities;

temporary impacts will occur as a result of project staging during construction activities.

4.3.3.3. Avoidance and Minimization Efforts

The following avoidance and minimization measure will minimize any potential impacts to the prairie falcon:

1. Areas of annual grassland temporarily disturbed during construction shall be revegetated with the seed mix specified in Table 6.

4.3.3.4. Compensatory Mitigation

No compensatory mitigation is proposed with implementation of the measures included in Section 4.3.3.3.

4.3.3.5. Cumulative Effects

Impacts to prairie falcons in the general vicinity of the project likely will occur through habitat loss during public works projects similar in scope to the subject project. Other projects in the region with similar impacts will also be required to minimize and/or mitigate those impacts. Considering the amount of habitat available for this species in the region relative to the amount of habitat in the BSA, and implementation of the avoidance and minimization measure detailed above, the project will not substantially contribute to cumulative effects for prairie falcons.

4.3.4. Pacific Pond Turtle

The Pacific pond turtle (*Emys marmorata*) is a State species of concern; it has no federal status. The Pacific pond turtle ranges from western Washington State south to northwestern Baja California. Two subspecies occur in California: the north Pacific pond turtle (*E.m. marmorata*); and the south Pacific pond turtle (*E.m. pallida*). The BSA is within the range of intergradations between the two subspecies. The pond turtle is a highly aquatic species, found in ponds, marshes, rivers, streams, and irrigation ditches that typically have rocky or muddy bottoms and support aquatic vegetation. Eggs are laid at upland sites, away from the water, from April through August.

4.3.4.1. Survey Results

The CNDDB includes five records of Pacific pond turtle within the 9-quad record search area; a record from 1993 is from approximately 0.25 mi from the BSA, upstream in Tres Pinos Creek. Additionally, during the July 2011 site visit, three adult Pacific pond turtles were observed in Tres Pinos Creek 90 ft from the BSA. The reach of Tres Pinos Creek within the BSA provides habitat for the Pacific pond turtle, and the species is present in the area. This species is likely to occur in the BSA.

4.3.4.2. Project Impacts

The project will result in permanent impacts to 0.10 ac of riverine and riverine wetlands that provide aquatic habitat for Pacific pond turtle due to installation of RSP, and the new bridge's concrete pier. The project will also result in temporary impacts to 0.14 ac of aquatic habitat due to dewatering and placement of temporary falsework.

Indirect effects may occur due to potential degradation of water quality until the plants in the revegetated area are established.

4.3.4.3. Avoidance and Minimization Efforts

1. Prior to the start of construction activities in Tres Pinos Creek, the reach of the creek within the BSA shall be surveyed by a qualified biologist for the presence of Pacific pond turtles. If Pacific pond turtles are observed in the BSA, they shall be relocated outside of the work area by a qualified biologist.

2. Following completion of the new bridge, all fill slopes, temporary impact and/or otherwise disturbed areas shall be restored to preconstruction contours (as appropriate) and revegetated with the native seed mix specified in Table 6.

3. Measures consistent with the current Caltrans' Construction Site BMP Manual (including the Storm Water Pollution Prevention Plan and WPCP Manuals) shall be implemented to minimize effects to Pacific pond turtle suitable habitat resulting from erosion, siltation, etc. during construction.

4.3.4.4. Compensatory Mitigation

No compensatory mitigation is proposed with implementation of the measures included in Section 4.3.4.3.

4.3.4.5. Cumulative Effects

Impacts to Pacific pond turtles in the general vicinity of the project likely will occur through habitat loss during public works projects similar in scope to the subject project. Other projects in the region with similar impacts will also be required to minimize and/or mitigate those impacts. Considering the amount of habitat available for this species in the region relative to the amount of habitat in the BSA, and implementation of the avoidance and minimization measures detailed above, the project will not substantially contribute to cumulative effects for Pacific pond turtles.

4.3.5. San Joaquin Whipsnake

The San Joaquin whipsnake (*Masticophis flagellum ruddocki*) is a State species of concern; it has no federal status. It inhabits the Sacramento and San Joaquin Valleys, from Colusa County to Kern County, and westward to the inner South Coast Ranges. An isolated population occurs in the Sutter Buttes. It is found at elevations of 60 ft up to 3,000 ft.

The San Joaquin whipsnake is a slender, fast-moving snake with smooth scales and a large head and eyes. Adults are 3 to 5 ft long and may be tan, olive, or yellowish brown, without the dark head and neckbands of other subspecies. This snake occurs in open, dry, treeless areas, including grassland and saltbush scrub, and seeks cover in rodent burrows, under shaded vegetation, and under surface objects such as rocks or logs.

This whipsnake is diurnal and hunts with the head held high above the ground. Prey is overcome and crushed with the jaws or beneath loops of the body, and eaten. Prey consists of small mammals, nestling and adult birds, bird eggs, lizards, snakes, amphibians, and carrion. They are good climbers and are able to climb bushes and trees. They bask on roads and will eat roadkill, and are frequently run over by vehicles. Little is known about their reproduction; mating presumably occurs in May and eggs are laid in early summer, hatching in 45-70 days.

4.3.5.1. Survey Results

The CNDDB includes seven records of San Joaquin whipsnake within the 9-quad search area. The closest record is dated 1993 and is from approximately 4.5 mi west of the BSA. The most recent record is dated 1994 and is from approximately 7.5 mi west-southwest of the BSA. The California annual grassland and the edges of the mixed oak series provide habitat for the San Joaquin whipsnake; this species could be present.

4.3.5.2. Project Impacts

The project will result in permanent impact to a combined total of 0.32 ac of annual grassland and mixed oak habitat, which is suitable for San Joaquin whipsnake, as a result of project cut and fill activities. Temporary impacts to suitable whipsnake habitat, totaling 0.53 ac, will also occur as a result of project staging and through the cutting back of vegetation to provide access routes and during construction activities.

4.3.5.3. Avoidance and Minimization Efforts

1. Prior to any ground-disturbing activities, the area shall be surveyed by a qualified biologist for the presence of San Joaquin whipsnakes. If San Joaquin whipsnakes are observed in the BSA, they shall be relocated outside of the work area by a qualified biologist.

2. Following completion of the new bridge, all fill slopes, temporary impact and/or otherwise disturbed areas shall be restored to preconstruction contours (as appropriate) and revegetated with the native seed mix specified in Table 6.

4.3.5.4. Compensatory Mitigation

No compensatory mitigation is proposed with implementation of the measures included in Section 4.3.5.3.

4.3.5.5. Cumulative Effects

Impacts to San Joaquin whipsnakes in the general vicinity of the project likely will occur through habitat loss during public works projects similar in scope to the subject project. Other projects in the region with similar impacts will also be required to minimize and/or mitigate those impacts. Considering the amount of habitat available for this species in the region relative to the amount of habitat in the BSA, and implementation of the avoidance and

minimization measures detailed above, the project will not substantially contribute to cumulative effects for San Joaquin whipsnakes.

4.3.6. Coast Horned Lizard

The coast horned lizard (*Phrynosoma blainvillii*) is a State species of concern but has no federal status. It is a flattened, spiny-bodied lizard with horns on the head. It occurs in a variety of open habitats with scattered low shrubs, including grassland, chaparral, and open pine, oak, and pinyon-juniper woodlands. Sandy areas, washes, floodplains, and wind-blown deposits provide favorable conditions. It is sometimes found along dirt roads, and frequently found near ant hills. This lizard ranges from Butte County to Kern County, in the Sierra Nevada foothills, and throughout the central and southern California coast.

The coast horned lizard seeks cover by running under a low shrub. During hibernation or periods of extreme heat, the coast horned lizard burrows into the soil under surface objects such as logs or rocks, in mammal burrows, or in crevices. It is a diurnal lizard and basks in the sun on open ground, or low boulders and rocks. Coast horned lizards are generally inactive in fall and winter. Breeding season varies according to local conditions, but generally occurs in late spring, with eggs hatching in late summer.

The coast horned lizard forages on the ground in open areas, usually between shrubs and often near ant nests. Their diet consists largely of harvester ants, but they will also eat other insects such as small beetles, wasps, grasshoppers, flies, and caterpillars.

4.3.6.1. Survey Results

The CNDDB includes a single record, dated 1993, for coast horned lizard within the 9-quad search area. This occurrence observed a single lizard approximately 0.8 mi to the west of the BSA along Panoche Road. The California annual grassland and the edges of the mixed oak series provide potential habitat for the coast horned lizard; this species could occur in the BSA.

4.3.6.2. Project Impacts

The project will result in permanent impact to a combined total of 0.32 ac of annual grassland and mixed oak habitat, which is suitable for coast horned lizard, as a result of project cut and fill activities. Temporary impacts to

suitable coast horned lizard habitat, totaling 0.53 ac, will also occur as a result of project staging and through the cutting back of vegetation to provide access routes and during construction activities.

4.3.6.3. Avoidance and Minimization Efforts

1. Prior to any ground-disturbing activities, the area shall be surveyed by a qualified biologist for the presence of coast horned lizards. If coast horned lizards are observed in the BSA, they shall be relocated outside of the work area by a qualified biologist.

2. Following completion of the new bridge, all fill slopes, temporary impact and/or otherwise disturbed areas shall be restored to preconstruction contours (as appropriate) and revegetated with the native seed mix specified in Table 6.

4.3.6.4. Compensatory Mitigation

No compensatory mitigation is proposed with implementation of the measures included in Section 4.3.6.3.

4.3.6.5. Cumulative Effects

Impacts to coast horned lizards in the general vicinity of the project likely will occur through habitat loss during public works projects similar in scope to the subject project. Other projects in the region with similar impacts will also be required to minimize and/or mitigate those impacts. Considering the amount of habitat available for this species in the region relative to the amount of habitat in the BSA, and implementation of the avoidance and minimization measures detailed above, the project will not substantially contribute to cumulative effects for coast horned lizards.

4.3.7. California Red-Legged Frog

CRLF (*Rana draytonii*) is a federally-listed threatened species and a State species of concern. Critical habitat for CRLF was designated on March 17, 2010. The BSA is located within critical habitat Unit SNB-2 for CRLF.

CRLF inhabits lowlands and foothills in or near permanent sources of water. They prefer ponds, creeks, or marshes with extensive shoreline vegetation. Intermittent streams provide suitable habitat if some surface water remains through the summer. Breeding generally occurs in ponds or stream pools that contain water through late summer and support dense, shrubby, or emergent

vegetation such as overhanging willows intermixed with cattails. However, breeding habitat can be varied and may include sag ponds, lagoons, stock ponds and backwaters within streams and creeks.

CRLF use upland areas and riparian vegetation for resting, feeding, dispersal, and estivation. Riparian areas can meet all of these needs; the scope of upland habitat use is not well-understood. CRLF may spend considerable time in suitable upland areas during the summer dry period. They may use a variety of places for estivation, including small mammal burrows, cracks at the bottom of a dry pond, spaces under boulders, rocks, and downed trees, and agricultural features such as drains, watering troughs, and abandoned sheds. Dispersal may occur across varying topography and vegetation type, and during winter rain events CRLF may travel up to 2 miles between water sources. Use of upland and riparian areas is most likely dependent on a number of factors, such as climatic conditions, habitat suitability, and life stage.

4.3.7.1. Survey Results

Three frogs were observed under the bridge during the July 2011 site visit. They were thought to be CRLF, but due to shadows and vegetation, a positive identification was not made. No CRLF were observed during the April 2020 site visit. The CNDDB includes eleven records of CRLF in the 9-quad search area. The nearest record is dated 2005 and is from 0.15 mi upstream of the project site on Tres Pinos Creek. Although there are no CNDDB records from within the BSA, this species is well-documented in the Tres Pinos Creek watershed.

Suitable aquatic breeding habitat and upland habitat are both present in the BSA. Tres Pinos Creek within the BSA features several pooled areas of slow-moving water; banks are intermittently lined with dense, overhanging vegetation, riparian annuals, and rock. The concrete low water crossing provides aquatic escape cover. Surrounding areas provide a variety of suitable estivation sites, and the riparian corridor itself is a natural path for dispersal.

A site assessment for the CRLF was prepared in August 2011 (Appendix D); the report concluded that CRLF are potentially present in the BSA, based on species range, species records, and presence of habitat within and near the

BSA. Site conditions were unchanged as of April 2020. Based on the results of this report, CRLF is inferred present in the BSA.

Since the project lies within designated critical habitat for this species, the BSA was evaluated for physical and biological features (PBFs). The PBFs of critical habitat for CRLF are aquatic and upland areas where suitable breeding and non-breeding habitat is interspersed throughout the landscape and is interconnected by unfragmented dispersal habitat. To be considered to possess the PBFs for CRLF, an area must include two or more suitable breeding locations, a permanent water source, associated uplands surrounding these water bodies up to 300 ft from the water's edge, all within 1.25 mi of one another and connected by barrier-free dispersal habitat that is at least 300 ft wide.

Within the BSA, the Tres Pinos Creek corridor and the surrounding upland areas qualify as PBFs for CRLF. Tres Pinos Creek provides suitable breeding and dispersal habitat while the adjacent upland annual grassland habitat provides suitable estivation and dispersal habitat during the wet season.

4.3.7.2. Project Impacts

The project will result in permanent impacts to 0.10 ac of riverine and riverine wetlands that provide suitable aquatic breeding habitat for CRLF. The project also will result temporary impacts to 0.14 ac of aquatic breeding habitat for one season. Permanent habitat loss is due to installation of RSP, and the concrete pier; temporary impacts are due to dewatering and placement of temporary falsework.

Additionally, the project will result in permanent impacts to 0.54 ac and temporary impacts to 0.62 ac of upland habitat for CRLF. Permanent habitat loss is due to installation of foundations, wingwalls, etc.; temporary impacts are due to project staging, cutting of vegetation to provide access routes, and other temporary construction disturbance.

Since the BSA is within designated critical habitat for CRLF and the habitats in the BSA contain PCE's for CRLF critical habitat, the impacts described above can also be considered impacts to critical habitat for CRLF.

Adherence to the measures listed in Section 4.3.8.3 should prevent any direct mortality to CRLF, as well as any detrimental increases in suspended sediments in the water.

Indirect effects will occur due to potential degradation of water quality until the plants in the revegetated area are established.

Impacts to potential CRLF habitat are shown in Figure 8.

4.3.7.3. Avoidance and Minimization Efforts

Minimization measures are consistent with the provisions of the CRLF "Programmatic Biological Opinion for Projects Funded or Approved under the Federal Highway Administration's Federal Aid Program (8-8-10-F-58)" dated May 4, 2011, listed below.

At a minimum, the following measures will be taken to reduce adverse effects to CRLF and their habitat:

1. Prior to the start of construction activities in Tres Pinos Creek, the reach of the creek within the BSA shall be surveyed by a qualified biologist for the presence of CRLF.

2. Only USFWS-approved biologists will participate in activities associated with the capture, handling, and monitoring of CRLF. Biologists authorized under this biological opinion do not need to re-submit their qualifications for subsequent projects conducted pursuant to this biological opinion, unless we have revoked their approval at any time during the life of this biological opinion.

3. Ground disturbance will not begin until written approval is received from the USFWS that the biologist is qualified to conduct the work, unless the individual(s) has/have been approved previously and the USFWS has not revoked that approval.

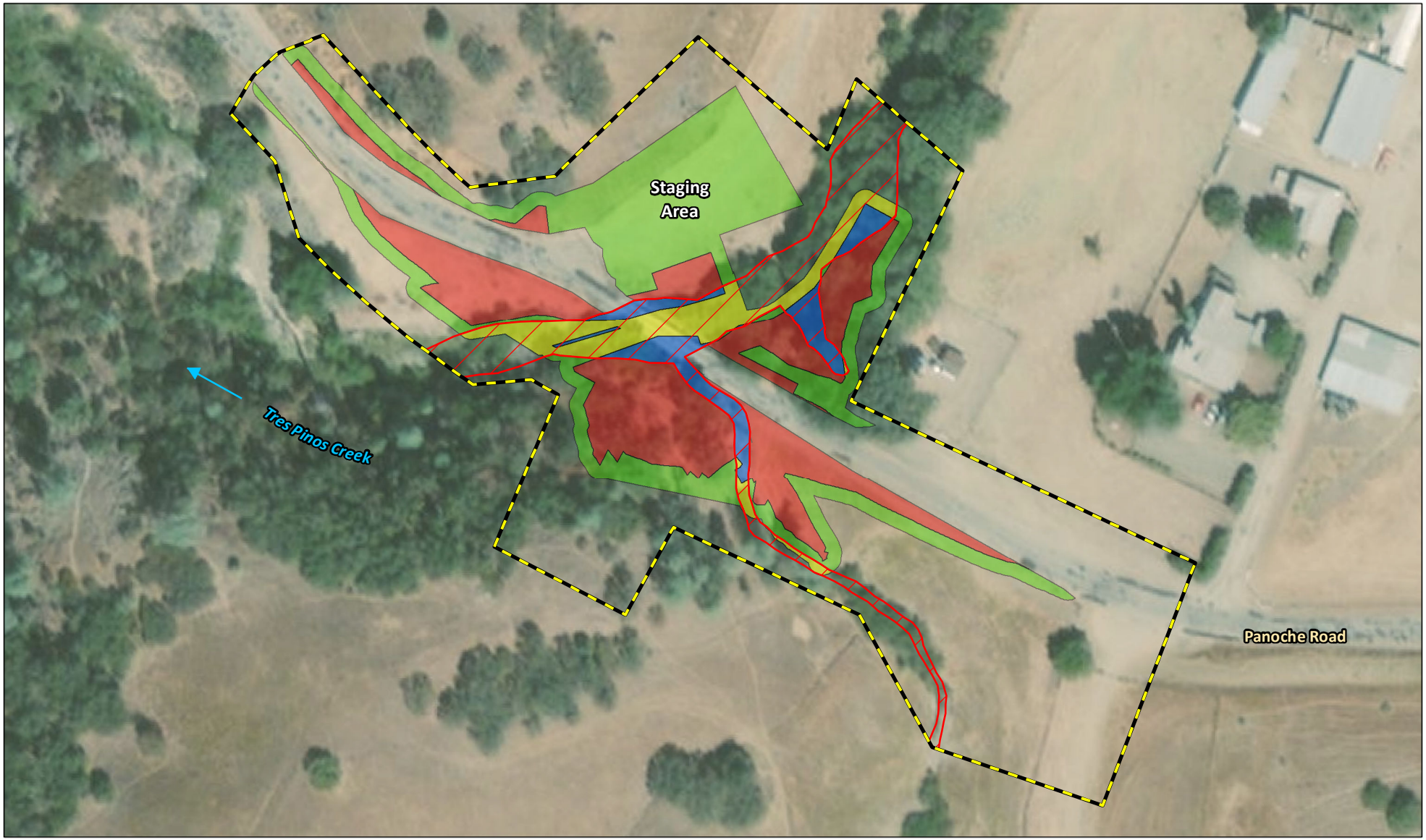

FIGURE 8

LEGEND

- Biological Study Area - (3.66 ac)
- California Red-Legged Frog Aquatic Habitat - (0.42 ac)

Impacts to Aquatic Habitat - (0.24 ac)

- Permanent Impacts - (0.10 ac)
- Temporary Impacts - (0.14 ac)

Impacts to Upland Habitat - (1.16 ac)

- Permanent Impacts - (0.54 ac)
- Temporary Impacts - (0.62 ac)

0 50 100
FEET

Panoche Road Bridge (No. 43C0027) over
Tres Pinos Creek Replacement Project
San Benito County, California; Caltrans District 5
Federal Project No. BRLO-5943(056)

Impacts to California Red-Legged Frog Habitat

SOURCE: Basemap - ESRI World Imagery (10/2018); Mapping - LSA (10/2020)

I:\QCE2001\GIS\Reports\NES\NES_Fig8_CRLF_Imps.mxd (10/29/2020)

4. A USFWS-approved biologist will survey the project site 48 hours before the onset of work activities. If any life stage of the CRLF is found and these individuals likely to be or injured by work activities, the approved biologist will be allowed sufficient time to move them from the site before work activities begin. The USFWS-approved biologist will relocate the CRLF the shortest distance possible to a location that contains suitable habitat and will not be affected by activities associated with the proposed project. The relocation site should be in the same drainage to the extent practicable. Caltrans will coordinate with the USFWS on the relocation site prior to the capture of any CRLF. The USFWS-approved biologist will maintain detailed records of any individuals that are moved (e.g., size, coloration, any distinguishing features, photographs [digital preferred]) to assist him or her in determining whether translocated animals are returning to the original point of capture.

5. Before any activities begin on a project, a USFWS-approved biologist will conduct a training session for all construction personnel. At a minimum, the training will include a description of the CRLF and its habitat, the specific measures that are being implemented to conserve the CRLF for the current project, and the boundaries within which the project may be accomplished. Brochures, books and briefings may be used in the training session, provided that a qualified person is on hand to answer any questions.

6. A USFWS-approved biologist will be present at the work site until all CRLF have been relocated out of harm's way, workers have been instructed, and disturbance of habitat has been completed. After this time, the state or local sponsoring agency will designate a person to monitor on-site compliance with all minimization measures. The USFWS-approved biologist will ensure that this monitor receives the training outlined in measure 4 and in the identification of CRLF. If the monitor or the USFWS-approved biologist recommends that work be stopped because CRLF would be affected in a manner not anticipated by Caltrans and the USFWS during review of the proposed action, they will notify the resident engineer (the engineer that is directly overseeing and in command of construction activities) immediately. The resident engineer will either resolve the situation by eliminating the effect

immediately or require that all actions, which are causing these effects, be halted. If work is stopped, the USFWS will be notified as soon as is reasonably possible.

7. During project activities, all trash that may attract predators will be properly contained, removed from the work site, and disposed of regularly. Following construction, all trash and construction debris will be removed from work areas.

8. All refueling, maintenance, and staging of equipment and vehicles will occur at least 60 ft from riparian habitat or water bodies and not in a location from where a spill would drain directly toward aquatic habitat (e.g., on a slope that drains away from the water). The monitor will ensure contamination of habitat does not occur during such operations. Prior to the onset of work, the County shall provide Caltrans with a plan for prompt and effective response to any accidental spills. All workers will be informed of the importance of preventing spills and of the appropriate measures to take should a spill occur.

9. Habitat contours will be returned to their original configuration at the end of project activities. This measure will be implemented in all areas temporarily disturbed by activities associated with the project, unless the USFWS and Caltrans determine that it is not feasible or modification of original contours would benefit the CRLF.

10. The number of access routes, size of staging areas, and the total area of the activity will be limited to the minimum necessary to achieve the project goal. ESAs will be delineated to confine access routes and construction areas to the minimum area necessary to complete construction, and minimize the impact to CRLF habitat; this goal includes locating access routes and construction areas outside of wetlands and riparian areas to the maximum extent practicable (Figure 7).

11. Caltrans will attempt to schedule work activities for times of the year when impacts to the CRLF would be minimal. For example, work that would affect large pools that may support breeding would be avoided, to the maximum degree practicable, during the breeding season (November through May). Isolated pools that are important to maintain

CRLF through the driest portions of the year would be avoided, to the maximum degree practicable, during the late summer and early fall. Habitat assessments, surveys, and informal consultation between Caltrans and the USFWS during project planning should be used to assist in scheduling work activities to avoid sensitive habitats during key times of the year.

12. To control sedimentation during and after project implementation, Caltrans and the sponsoring agency will implement BMPs outlined in any authorizations or permits, issued under the authorities of the CWA that it receives for the specific project. If BMPs are ineffective, Caltrans and the sponsoring agency will attempt to remedy the situation immediately, in consultation with the USFWS.

13. If a work site is to be temporarily dewatered by pumping, intakes will be completely screened with wire mesh not larger than 0.2 in to prevent CRLF from entering the pump system. Water will be released or pumped downstream at an appropriate rate to maintain downstream flows during construction. Upon completion of construction activities, any diversions or barriers to flow will be removed in a manner that would allow flow to resume with the least disturbance to the substrate. Alteration of the stream bed will be minimized to the maximum extent possible; any imported material will be removed from the stream bed upon completion of the project.

14. Unless approved by the USFWS, water will not be impounded in a manner that may attract CRLF.

15. A USFWS-approved biologist will permanently remove any individuals of exotic species such as bullfrogs (*Rana catesbeiana*), signal and red swamp crayfish (*Pacifasticus leniusculus*; *Procambarus clarkii*), and centrarchid fishes from the project area, to the maximum extent possible. The USFWS-approved biologist will be responsible for ensuring his or her activities are in compliance with the California Fish and Game Code.

16. If Caltrans demonstrates that disturbed areas have been restored to conditions that allow them to function as habitat for the CRLF, these areas will not be included in the amount of total habitat temporarily disturbed.

17. To ensure that diseases are not conveyed between work sites by the USFWS-approved biologists, the fieldwork code of practice developed by the Declining Amphibian Populations Task Force will be followed at all times.

18. Project sites will be re-vegetated with an assemblage of native riparian, wetland, and upland vegetation suitable for the area. Locally collected plant materials will be used to the extent practicable. Invasive, exotic plants will be controlled to the maximum extent practicable. This measure will be implemented in all areas disturbed by activities associated with the project, unless the USFWS and Caltrans determine that it is not feasible or practical.

19. Caltrans will not use herbicides as the primary method used to control invasive, exotic plants. However, if Caltrans determines the use of herbicides is the only feasible method for controlling invasive plants at a specific project site, it will implement the following additional protective measures for the CRLF:

    a. Caltrans will not use herbicides during the breeding season for the CRLF.

    b. Caltrans will conduct surveys for the CRLF immediately prior to the start of any herbicide use. If found, CRLF will be relocated to suitable habitat far enough from the project area that no direct contact with herbicides would occur.

    c. Giant reed and other invasive plants will be cut and hauled out by hand and the painted with glyphosate or glyphosate-based products, such as Aquamaster® or Rodeo®.

d. Licensed and experienced Caltrans staff or a licensed and experienced contractor will use a hand-held sprayer for foliar application of Aquamaster® or Rodeo® where large monoculture stands occur at an individual project site.

e. All precautions will be taken to ensure that no herbicide is applied to native vegetation.

f. Herbicides will not be applied on or near open water surfaces (no closer than 60 ft from open water).

g. Foliar applications of herbicide will not occur when wind speeds are in excess of 3 mi per hour.

h. No herbicides will be applied within 24 hours of forecasted rain.

i. Application of all herbicides will be done by a qualified Caltrans staff or contractors to ensure that overspray is minimized, that all application is made in accordance with label recommendations, and with implementation of all required and reasonable safety measures. A safe dye will be added to the mixture to visually denote treated sites. Application of herbicides will be consistent with the U.S. Environmental Protection Agency's Office of Pesticide Programs, Endangered Species Protection Program county bulletins

j. All herbicides, fuels, lubricants, and equipment will be stored, poured, or refilled at least 60 ft from riparian habitat or water bodies in a location where a spill would not drain directly toward aquatic habitat. Caltrans will ensure that contamination of habitat does not occur during such operations. Prior to the onset of work, Caltrans will ensure that a plan is in place for a prompt and effective response to accidental spills. All workers will be informed of the importance of preventing spills and of the appropriate measures to take should a spill occur.

Additional minimization measures include:

20. Following completion of the new bridge, all fill slopes, temporary impact and/or otherwise graded areas shall be revegetated with the native seed mix specified in Table 6.

21. During placement of RSP, native topsoil from the channel will be incorporated within the RSP to provide a seeding and planting medium. Areas of RSP above the OHWM will be revegetated with the seed mix specified in Table 6. In addition, locally-obtained willow cuttings/poles will be installed within the lower sections of the RSP near the OHWM.

22. Removal of the existing bridge and subsequent revegetation of the area currently covered by the bridge will restore approximately 0.02 ac of riparian habitat.

4.3.7.4. Compensatory Mitigation

No compensatory mitigation is proposed with implementation of the measures included in Section 4.3.7.3.

4.3.7.5. Cumulative Effects

Impacts to CRLF in the general vicinity of the project likely will occur through habitat loss during public works projects similar in scope to the subject project. Other projects in the region with similar impacts will also be required to mitigate those impacts. Considering the amount of habitat available for this species in the region relative to the amount of habitat in the BSA, and implementation of the avoidance and minimization measures detailed above, the project will not substantially contribute to cumulative effects for CRLF.

4.3.8. South Central California Coast Steelhead

The SCCC steelhead (*Oncorhynchus mykiss*) is federally listed as threatened; it has no State status. Critical habitat for the SCCC steelhead was established in 2006, and includes the length of the San Benito River within San Benito County. The BSA is approximately 15 mi upstream of the San Benito River, therefore the BSA is not located within critical habitat for SCCC.

Steelhead are anadromous fish that spend part of their life cycle in freshwater and part in salt water. Spawning occurs in small, freshwater streams where the young remain from one to several years before migrating to the ocean to feed and grow. Adults return to their natal streams to spawn and complete their life cycle. Steelhead require clean, cold, well-oxygenated streams for spawning. Spawning streams must have a substrate of gravel or small cobble to provide safe incubation sites for the eggs. The SCCC steelhead occurs throughout Monterey County and in most of San Luis Obispo and San Benito Counties, as well as the southern part of Santa Clara County.

4.3.8.1. Survey Results

Within San Benito County, the SCCC steelhead occurs in the San Benito and Pajaro Rivers and their tributaries, including Tres Pinos Creek. Additionally, according to NMFS, the species is intermittently present in the reach of Tres Pinos Creek within the BSA (see documentation in Appendix E). SCCC steelhead fingerlings were observed in Tres Pinos Creek during the May 11, 2011 general biological survey, identified by LSA biologist Laura Belt. Observation of the fish was incidental and not part of a larger survey effort; number, size, and location of the fish was not documented. Although habitat conditions were largely unchanged during the April 16, 2020 field survey visibility in pooled areas was minimal fur to high cover of floating water primrose. No fish or other aquatic species were observed during this survey.

4.3.8.2. Project Impacts

The project will result in permanent impacts to 0.01 ac of riverine that may provide suitable SCCC steelhead habitat as a result of placement of the bridge support pier and RSP. The project will also result in temporary impacts to 0.02 ac of riverine as a result of construction of the new bridge, temporary falsework, demolition of the existing bridge, construction access, and dewatering.

Construction of the support pier and placement of RSP are the only project components anticipated to result in potential for long-term impacts to SCCC steelhead in the form of permanent changes to flow velocity and stream depth. In order to address these potential adverse effects to SCCC steelhead, a hydraulic analysis was prepared (Appendix G). The analysis found that average channel velocity (ft per second) at two cross sections upstream of the Action Area would result in an approximately 2 to 3 ft per second increase in average channel velocity, and recommended RSP in the channel to protect

against these increases. The size and extent of the RSP shown in the draft plans in Appendix A (Construction Details Sheets C-4 and C-5) is expected to protect the channel bank from erosion. The water surface elevation at the upstream face of the bridge for the 100-year storm with the existing bridge in place is 1796.5 ft; the proposed bridge would have a WSEL of 1795.0 ft. These changes represent a minimal shift from existing conditions and are not anticipated to result in substantial adverse effects to SCCC steelhead.

Strict adherence to the measures listed in Section 4.3.8.3 should prevent any direct mortality to SCCC steelhead, as well as any detrimental increases in suspended sediments in the water.

Indirect effects may occur due to potential degradation of water quality until the plants in the revegetated area are established.

4.3.8.3. Avoidance and Minimization Efforts

1. Prior to the start of construction activities in Tres Pinos Creek, the reach of the creek within the BSA shall be surveyed by a qualified biologist for the presence if SCCC steelhead.

2. Work in the live channel of Tres Pinos Creek (consisting of placement of RSP, support pier, and falsework) will be limited to the period of June 15 through October 15. If any work within the live channel of Tres Pinos Creek is not completed by October 15, Caltrans will request a written approval/extension from NMFS to allow work past October 15. Revegetation activities are excluded from this requirement with the stipulation that no heavy equipment be used in the channel.

3. Prior to project implementation, a qualified biologist will instruct all construction personnel and monitoring biologists of the terms and conditions being implemented to protect SCCC steelhead during construction. The biological monitor will have the full authority to halt work as necessary for the purpose of minimizing adverse effects on SCCC steelhead.

4. The work area for placement of RSP, support pier, and falsework will be dewatered prior to the start of work. Dewatering will consist of installation of a flow diversion to separate the live channel from the area where in-stream work will occur. The flow diversion will consist of a metal pipe (CMP) sized to accommodate the flows expected during

the diversion period. The CMP will be placed along the low-flow invert of the natural creek and a small earthen berm will be installed at each end of the pipe to direct water into the pipe. Clean sand and gravel will be used at the base of the berm to protect the existing creek channel. Both berms and CMP will be completely removed at the completion of project construction. A qualified biologist will be on site during installation and removal of the flow diversion.

5. Prior to installation of the flow diversion, a qualified biologist will determine the need for a temporary fish seine around the area to be isolated. If a seine is needed, the qualified biologist will oversee the installation. A weighted fish seine will be stretched across the length of the bank where work will be conducted, and will extend a minimum of 3.3 ft beyond the upstream and downstream limits of the work. With the upstream and downstream ends of the seine remaining on the bank, the remainder of the seine will be extended into the channel to approximately 3.3 ft beyond the limits of the area to be dewatered. The seine will be temporarily staked into place in such a way that no fish may enter the isolated area. The purpose of this method is to direct the fish out of the area to be dewatered.

6. After the seine is in place, the qualified biologist will visually survey the waters isolated behind the seine for the presence of any fish. If any fish are encountered within the isolated area, the fish seining process must be repeated until all fish are driven from the area to be isolated, as determined by the fisheries biologist. The qualified biologist will capture any fish that remain in the areas to be dewatered. Electrofishing may be implemented to ensure that all of the fish are removed from the work area.

7. Once all of the fish have been removed from the work area, the flow diversion will be installed in the isolated area. The qualified biologist will be on site during installation and removal of the flow diversion.

8. During removal of the existing bridge, a tarp or other approved method will be used below the bridge to prevent debris from falling into Tres Pinos Creek. The tarp will be left in place until the bridge is removed.

9. ESAs, as shown in Figure 7, will be designated at the edge of work adjacent to Tres Pinos Creek to prevent encroachment into the live channel (excluding activities associated with placement of RSP, support pier, and falsework). ESA limits will be marked using orange snow fencing or equivalent, and will remain in place and maintained in good condition until construction is complete.

10. A SWPPP or WPCP will be prepared by the contractor in accordance with typical provisions associated with a Regional General Permit for Construction Activities (on file with the Central Coast RWQCB). The SWPPP or WPCP will contain a Spill Response Plan with instructions and procedures for reporting spills, the use and location of spill containment equipment, and the use and location of spill collection materials.

11. Contract specifications will include the BMPs, where applicable, to reduce erosion during construction.

12. All areas temporarily impacted during project construction will be restored to pre-construction contours and revegetated with native species as specified in Table 5.

13. During placement of RSP, native topsoil from the channel will be incorporated within the RSP to provide a seeding and planting medium. Areas of RSP above the OHWM will be revegetated with the seed mix specified in Table 6. In addition, locally-obtained willow cuttings/poles will be installed within the lower sections of the RSP near the OHWM.

14. All construction will be conducted during daylight hours.

4.3.8.4. Compensatory Mitigation

No compensatory mitigation is proposed with implementation of the measures included in Section 4.3.8.3.

4.3.8.5. Cumulative Effects

Impacts to SCCC steelhead in the general vicinity of the project likely will occur through habitat loss during public works projects similar in scope to the subject project. Other projects in the region with similar impacts will also be

required to minimize and/or mitigate those impacts. Considering the amount of habitat available for this species in the region relative to the amount of habitat in the BSA, and implementation of the avoidance and minimization measures detailed above, the project will not substantially contribute to cumulative effects for SCCC steelhead.

Chapter 5. Results: Permits and Technical Studies for Special Laws or Conditions

5.1. Federal Endangered Species Act Consultation Summary

As shown in Table 7, the proposed project May Affect, and is Likely to Adversely Affect CRLF, CRLF critical habitat, and SCCC steelhead. All other species have a No Effect determination.

Table 7: Effect Determinations for Federally-Listed Species and Designated Critical Habitat

Common Name	Determination[1]
Blunt-nosed leopard lizard	No Effect
California condor	No Effect
California red-legged frog	May Affect, Likely to Adversely Affect
California red-legged frog Critical Habitat	May Affect, Likely to Adversely Affect
Least Bell's vireo	No Effect
Marsh sandwort	No Effect
South Central California Coast steelhead	May Affect, Likely to Adversely Affect
South Central California Coast steelhead Critical Habitat	No Effect
Southwestern willow flycatcher	No Effect
Vernal pool fairy shrimp	No Effect

[1] FESA effect determinations are provided for those federally listed species, or species proposed for federal listing, that were included on the USFWS IPaC and NMFS lists (included in Appendix B). FESA effect determinations are not provided for those federally listed species, or species proposed for federal listing, that were not included on the USFWS IPac and NMFS lists (i.e., only on the CNDDB and/or CNPS lists), as these species were included to support the State and local environmental process but will not be considered as part of any Section 7 consultation.

Caltrans will initiate consultation with USFWS for CRLF pursuant to Section 7 of FESA. It is anticipated that the USFWS will concur with the above determination, and, with incorporation of the proposed avoidance and minimization efforts, the project will not jeopardize the continued existence of CRLF.

Caltrans will initiate formal consultation with NMFS for SCCC steelhead species pursuant to Section 7 of FESA. It is anticipated that the NMFS will concur with this determination, and, with incorporation of the proposed avoidance and minimization efforts, the project will not jeopardize the continued existence of SCCC Steelhead.

A Biological Assessment will be submitted to USFWS and NMFS to address project effects to these species.

5.2. Federal Fisheries and Essential Fish Habitat Consultation Summary

The aquatic resources in the BSA are not designated Essential Fish Habitat.

5.3. California Endangered Species Act Consultation Summary

The proposed project will not affect any species listed as threatened or endangered under CESA. Thus, a Section 2081 Incidental take permit will not be required.

5.4. Wetlands and Other Waters Coordination Summary

5.4.1. Army Corps of Engineers

Waters of the U.S. within the BSA are limited to Tres Pinos Creek and a small ephemeral tributary totaling 0.42 ac. Wetlands within the BSA, totaling 0.37 ac, are located along the length of Tres Pinos Creek (except under the existing bridge deck and the low-water crossing) and the central length of the ephemeral tributary. Non-wetland waters, totaling 0.05 ac, consist of all features within the OHWM that do not support wetlands.

The proposed project will result in both permanent and temporary impacts to waters of the U.S. Permanent impact to wetlands, totaling 0.09 ac, will occur during realignment of a portion of the ephemeral drainage, placement of the concrete pier, and RSP. Temporary impact to wetlands, totaling 0.12 ac, will occur during dewatering activities.

Permanent impacts to non-wetland waters, totaling 0.01 ac, will occur during realignment of a portion of the ephemeral drainage and placement of RSP. Temporary impacts, totaling 0.02 ac, will occur during dewatering activities.

The waters of the U.S. in the BSA that will be affected by the project are regulated by the ACOE under Section 404 of the CWA. It is expected the proposed discharge into waters of the U.S. during project construction can be authorized by the ACOE using Nationwide Permit (NWP) 14 – Linear Transportation Projects. In accordance with the conditions of NWP 14, a Preconstruction Notification must be submitted to the ACOE for verification that the proposed discharges comply with the conditions of the subject NWP's.

5.4.2. Regional Water Quality Control Board

Discharges into waters of the U.S. under Section 404 of the CWA also require a Water Quality Certification from the RWQCB pursuant to Section 401 of the CWA. The RWQCB may opt to waive the water quality certification and instead issue waste discharge requirements pursuant to their authority under the Porter-Cologne Water Quality Control Act.

5.4.3. California Department of Fish and Wildlife

CDFW jurisdictional waters in the BSA, totaling 1.03 ac, include Tres Pinos Creek, its associated arroyo willow riparian vegetation, and the ephemeral tributary. Impacts to these resources will require a Lake and Streambed Alteration Agreement from CDFW, pursuant to Sections 1600-1616 of the California Fish and Game Code.

The project will result in permanent impacts to 0.32 ac and temporary impacts to 0.09 ac of waters within CDFW jurisdiction, as a result of project construction. This includes 0.10 ac of permanent impacts and 0.14 ac of temporary impacts to ACOE jurisdictional waters; an additional 0.22 ac of permanent impacts and 0.09 ac of temporary impacts will occur to additional areas under CDFW jurisdiction.

5.4.4. Executive Order 11990 – Protection of Wetlands

The project will result in minor permanent and temporary impacts to wetlands. The project has been designed to avoid impacts to wetlands, where feasible, including constructing two retaining walls to minimize embankment fill from encroaching into the creek. The measures in Sections 4.1.4.3 will also minimize impacts to wetlands during and after construction. Based upon the above considerations, it is determined that there is no practicable alternative to the proposed construction in wetland and that the proposed action includes

all practicable measures to minimize harm to wetlands which may result from such use.

5.5. Migratory Bird Treaty Act and California Fish and Game Code (Breeding Birds)

Disturbance of migratory birds during their nesting season (February 1 to August 31) could result in “take” which is prohibited under the MBTA and Section 3513 of the California Fish and Game Code. California Fish and Game Code (Section 3503) also prohibits take or destruction of bird nests or eggs.

The following seasonal work restrictions will be implemented during construction to minimize the potential for take of nesting birds:

1. If work must begin during the nesting season (February 1 to August 31), a qualified biologist shall survey all suitable nesting habitat in the BSA for presence of nesting birds. This survey shall occur no more than 10 days prior to the start of construction. If no nesting activity is observed, work may proceed as planned. If an active nest is discovered, Caltrans will be notified and a qualified biologist shall evaluate the potential for the proposed project to disturb nesting activities. The evaluation criteria shall include, but are not limited to, the location/orientation of the nest in the nest tree, the distance of the nest from the BSA, and line of sight between the nest and the BSA.

2. CDFW and Caltrans shall be contacted to review the evaluation and determine if the project can proceed without adversely affecting nesting activities.

3. If work is allowed to proceed, a qualified biologist shall be on-site weekly during construction activities that occur in the breeding season to monitor nesting activity. The biologist shall have the authority to stop work if it is determined the project is adversely affecting nesting activities.

5.6. Impacts to Oak Woodlands

The project will result in the removal of 0.09 ac of mixed oak woodland vegetation, including two native oak trees (10 and 31 inches diameter at

breast height, respectively). The project has been design to avoid impacts to oak woodlands, where feasible, including the use of retaining walls and minimizing the amount of cut and fill required to install the new roadway bridge approaches. Based upon the above considerations, it is determined that there is no practicable alternative to the proposed construction in oak woodlands and that the proposed action includes all practicable measures to minimize harm to oak woodlands.

5.7. Executive Order 13112 – Invasive Species

To avoid the introduction of invasive species into the BSA during project construction, contract specifications shall include, at a minimum, the following measures.

1. All earthmoving equipment to be used during project construction shall be thoroughly cleaned before arriving on the project site.
2. All seeding equipment (i.e., hydroseed trucks) shall be thoroughly rinsed at least three times prior to beginning seeding work.
3. To avoid spreading any non-native invasive species already existing on-site, to off-site areas, all equipment shall be thoroughly cleaned before leaving the site.
4. To avoid introducing additional non-native species to the site, all fill dirt brought onto the site must be weed free.

Chapter 6. References

Baldwin, Bruce G. et. al., Ed. 2012. *The Jepson Manual: Vascular Plants of California, Second Edition*. University of California Press.

Best, Devin. January 5, 2012 and April 4, 2013. Personal communication.

California Department of Fish and Wildlife. 2020. Rarefind 5 online computer program. Sacramento, CA. Records search executed June 1, 2020. Sacramento, California.

California Native Plant Society. 2020. Inventory of Rare and Endangered Vascular Plants of California - Online Edition, V8-03 0.39. Records search executed June 1, 2020. Sacramento, California.

Environmental Laboratory. 1987. Corps of Engineers Wetlands Delineation Manual. Technical Report Y-97-1. U.S. Army Corps of Engineers Waterways Experiment Station, Vicksburg, MS.

Jennings, M.R. and M.P. Hayes. 1994. *Amphibian and reptile species of special concern in California*. California Dept. of Fish and Wildlife, Inland Fisheries Division, Rancho Cordova, CA. Contract No. 8023.

Jepson Online Inventory for California Floristics (eds.) 2018. Jepson eFlora, http://ucjeps.berkeley.edu/eflora/

LSA Associates, Inc. 2011. Site Assessment for California Red-Legged Frog and California Tiger Salamander. Report prepared for the San Benito County's Panoche Road Bridge Replacement Project at Tres Pinos Creek. August 2011. Rocklin, California.

National Marine Fisheries Service. 2020. Google Earth Species list. http://www.westcoast.fisheries.noaa.gov/maps_data/california_species_list_tools.html. Records search executed June 1, 2020.

Sawyer, John O. and Todd Keeler-Wolf. 2008. *A Manual of California Vegetation: Second Edition*. California Native Plant Society. Sacramento, CA.

U.S. Army Engineer Research and Development Center. 2008. *Regional Supplement to the Corps of Engineers Wetland Delineation Manual: Arid Southwest Region*. ERDC/EL TR-08-28.

U.S. Fish and Wildlife Service. 2020. Information for Planning and Consultation (IPac) Online Threatened and Endangered Species Lists. Sacramento Fish and Wildlife Office. Records search executed June 1, 2020. Sacramento, California: Sacramento Fish and Wildlife Office.

_____. 2002. Recovery Plan for the California Red-legged Frog (*Rana draytonii*). U.S. Fish and Wildlife Service, Portland, Oregon.173pp.

Appendix A Design Plans

Dist	COUNTY	ROUTE	SHEET No.	TOTAL SHEETS
05	SBt	PANOCHE ROAD	1	33

APPROVED AS TO IMPACT ON STATE FACILITIES AND CONFORMANCE WITH APPLICABLE STATE STANDARDS AND PRACTICES AND THAT TECHNICAL OVERSIGHT WAS PERFORMED.

INDEX OF PLANS

SHEET No.	DESCRIPTION
1	TITLE SHEET
2-4	TYPICAL CROSS SECTIONS
5	LAYOUT
6	PROFILE AND SUPERELEVATION DIAGRAM
7-11	CONSTRUCTION DETAILS
12	DRAINAGE PROFILE
13	DRAINAGE DETAILS
14-16	TRAFFIC HANDLING AND CONSTRUCTION AREA SIGNS
17	RETAINING WALL PLAN
X-X	SUMMARY OF QUANTITIES

STRUCTURE PLANS

18-33 PANOCHE ROAD BRIDGE No. 47C0070

THE STANDARD PLANS LIST APPLICABLE TO THIS CONTRACT IS INCLUDED IN THE NOTICE TO BIDDERS AND SPECIAL PROVISIONS BOOK.

COUNTY OF SAN BENITO

DEPARTMENT OF PUBLIC WORKS

PROJECT PLANS FOR CONSTRUCTION ON

PANOCHE ROAD OVER TRES PINOS CREEK

IN SAN BENITO COUNTY
NEAR HOLLISTER
COUNTY PROJECT # 698
FEDERAL PROJECT # BRLS 5943(056)

TO BE SUPPLEMENTED BY STATE OF CALIFORNIA STANDARD PLANS DATED 2018

PRELIMINARY PLANS
11-5-20

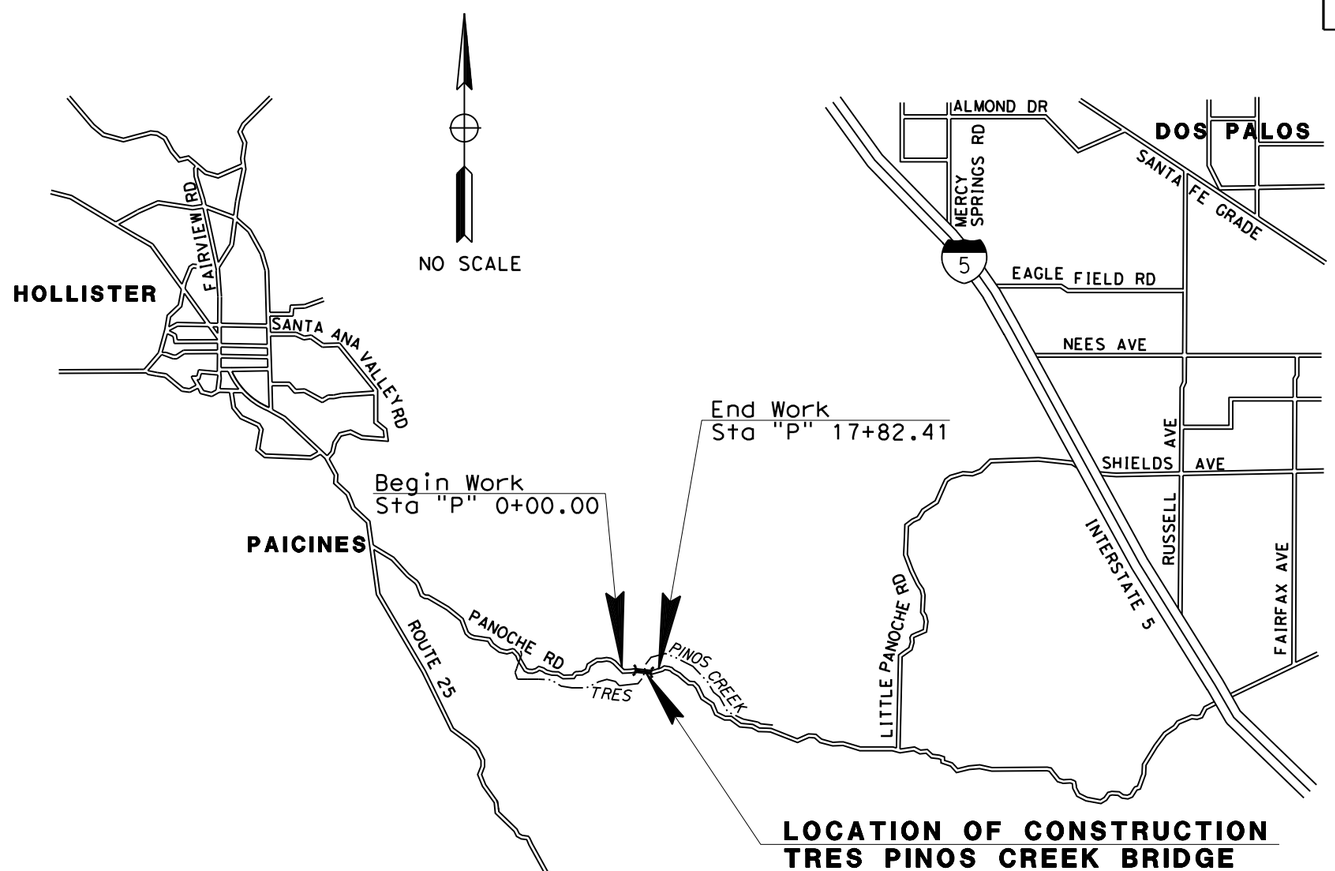

THE CONTRACTOR SHALL POSSESS THE CLASS (OR CLASSES) OF LICENSE AS SPECIFIED IN THE "NOTICE TO BIDDERS."

APPROVAL SAN BENITO COUNTY — DATE

REGISTERED PROFESSIONAL ENGINEER — ARAMN NAZEMI — No. C55927 — Exp. — CIVIL — STATE OF CALIFORNIA

PROJECT ENGINEER REGISTERED CIVIL ENGINEER — DATE

REGISTERED PROFESSIONAL ENGINEER — CAROLYN DAVIS — No. C58440 — Exp. — CIVIL — STATE OF CALIFORNIA

PLANS APPROVAL DATE

THE STATE OF CALIFORNIA OR ITS OFFICERS OR AGENTS SHALL NOT BE RESPONSIBLE FOR THE ACCURACY OR COMPLETENESS OF SCANNED COPIES OF THIS PLAN SHEET.

QUINCY ENGINEERING
11017 Cobblerock Drive
Suite 100
Rancho Cordova, CA 95670

San Benito County - Public Works Department
2301 Technology Parkway
Hollister, CA 95023

CONTRACT No.	00-000004
PROJECT ID	0000000000

LAST REVISION 00-00-00 — DATE PLOTTED => 11/5/2020 — TIME PLOTTED => 4:14:01 PM

Dist	COUNTY	ROUTE	SHEET No.	TOTAL SHEETS
05	SBt	PANOCHE ROAD	2	33

PRELIMINARY PLANS
REGISTERED CIVIL ENGINEER 11/05/20 DATE

PLANS APPROVAL DATE

REGISTERED PROFESSIONAL ENGINEER Carolyn Davis No. C58440 Exp. 12/31/20 CIVIL STATE OF CALIFORNIA

THE STATE OF CALIFORNIA OR ITS OFFICERS OR AGENTS SHALL NOT BE RESPONSIBLE FOR THE ACCURACY OR COMPLETENESS OF SCANNED COPIES OF THIS PLAN SHEET.

QUINCY ENGINEERING
11017 Cobblerock Drive
Suite 100
Rancho Cordova, CA 95670

San Benito County - Public Works Department
2301 Technology Parkway
Hollister, CA 95023

NOTES:

1. DIMENSIONS OF THE PAVEMENT SECTIONS (STRUCTURAL SECTION) ARE SUBJECT TO TOLERANCES SPECIFIED IN THE STANDARD SPECIFICATIONS.
2. SUPERELEVATIONS ARE SHOWN ON THE SUPERELEVATION DIAGRAMS, OR AS DIRECTED BY THE ENGINEER.
3. CONSTRUCT SLOPE AND WIDTH AS SHOWN IN STANDARD PLANS FOR MBGR AND TERMINAL SYSTEMS.

ABBREVIATIONS:

SR	SUPERELEVATION RATE
R/W	RIGHT OF WAY

DESIGN DESIGNATION

2010 ADT = 241 T.I. = 6.0
2029 ADT = 429 V = 45 MPH

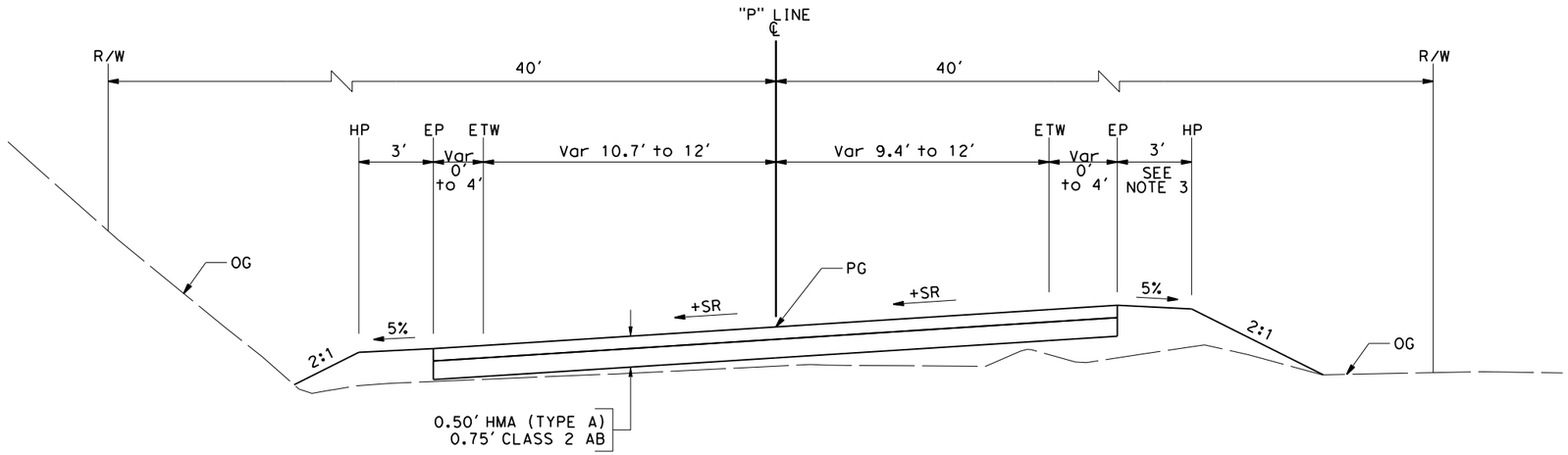

"P" LINE
Sta 10+48.00 TO Sta 11+53.00

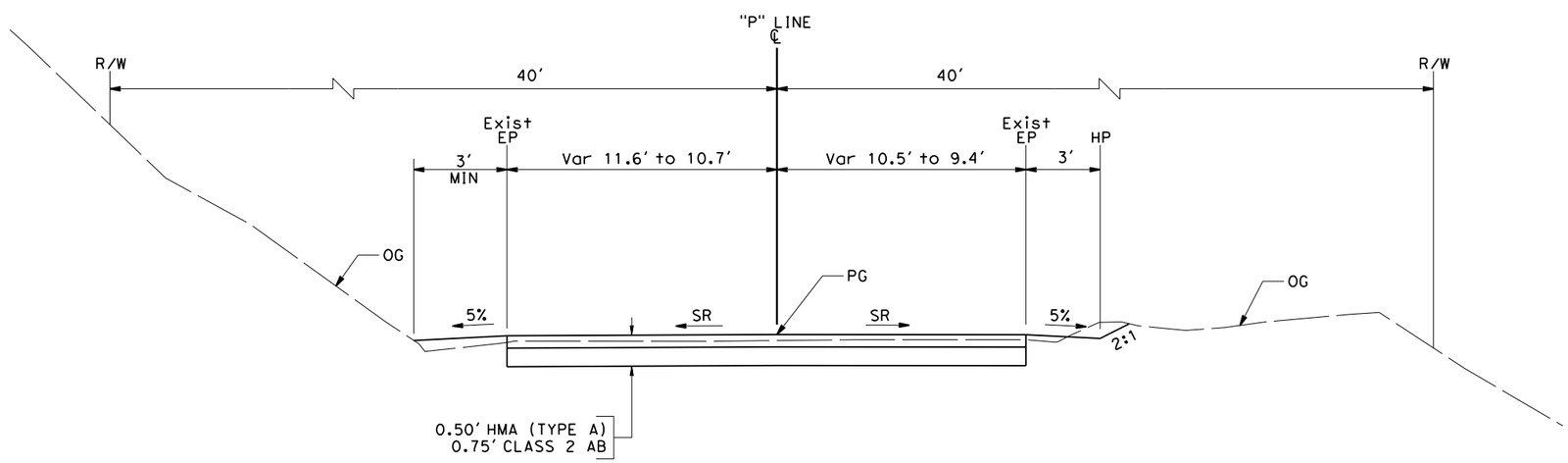

"P" LINE
Sta 10+00.00 TO Sta 10+48.00

TYPICAL CROSS SECTIONS

NO SCALE

X-1

REVISED BY	DATE REVISED
ANDREW MITCHELL	01/22/13

CALCULATED-DESIGNED BY	CHECKED BY

PROJECT ENGINEER: CAROLYN DAVIS

SAN BENITO DEPARTMENT OF PUBLIC WORKS

PANOCHE ROAD BRIDGE REPLACEMENT

LAST REVISION 00-00-00 | DATE PLOTTED => 11/5/2020 | TIME PLOTTED => 4:14:05 PM

Dist	COUNTY	ROUTE	SHEET No.	TOTAL SHEETS
05	SBt	PANOCHE ROAD	3	33

PRELIMINARY PLANS
REGISTERED CIVIL ENGINEER 11/05/20 DATE

PLANS APPROVAL DATE

REGISTERED PROFESSIONAL ENGINEER Carolyn Davis No. C58440 Exp. 12/31/20 CIVIL STATE OF CALIFORNIA

THE STATE OF CALIFORNIA OR ITS OFFICERS OR AGENTS SHALL NOT BE RESPONSIBLE FOR THE ACCURACY OR COMPLETENESS OF SCANNED COPIES OF THIS PLAN SHEET.

QUINCY ENGINEERING
11017 Cobblerock Drive
Suite 100
Rancho Cordova, CA 95670

San Benito County - Public Works Department
2301 Technology Parkway
Hollister, CA 95023

NOTES:

1. DIMENSIONS OF THE PAVEMENT SECTIONS (STRUCTURAL SECTION) ARE SUBJECT TO TOLERANCES SPECIFIED IN THE STANDARD SPECIFICATIONS.
2. SUPERELEVATIONS ARE SHOWN ON THE SUPERELEVATION DIAGRAMS, OR AS DIRECTED BY THE ENGINEER.

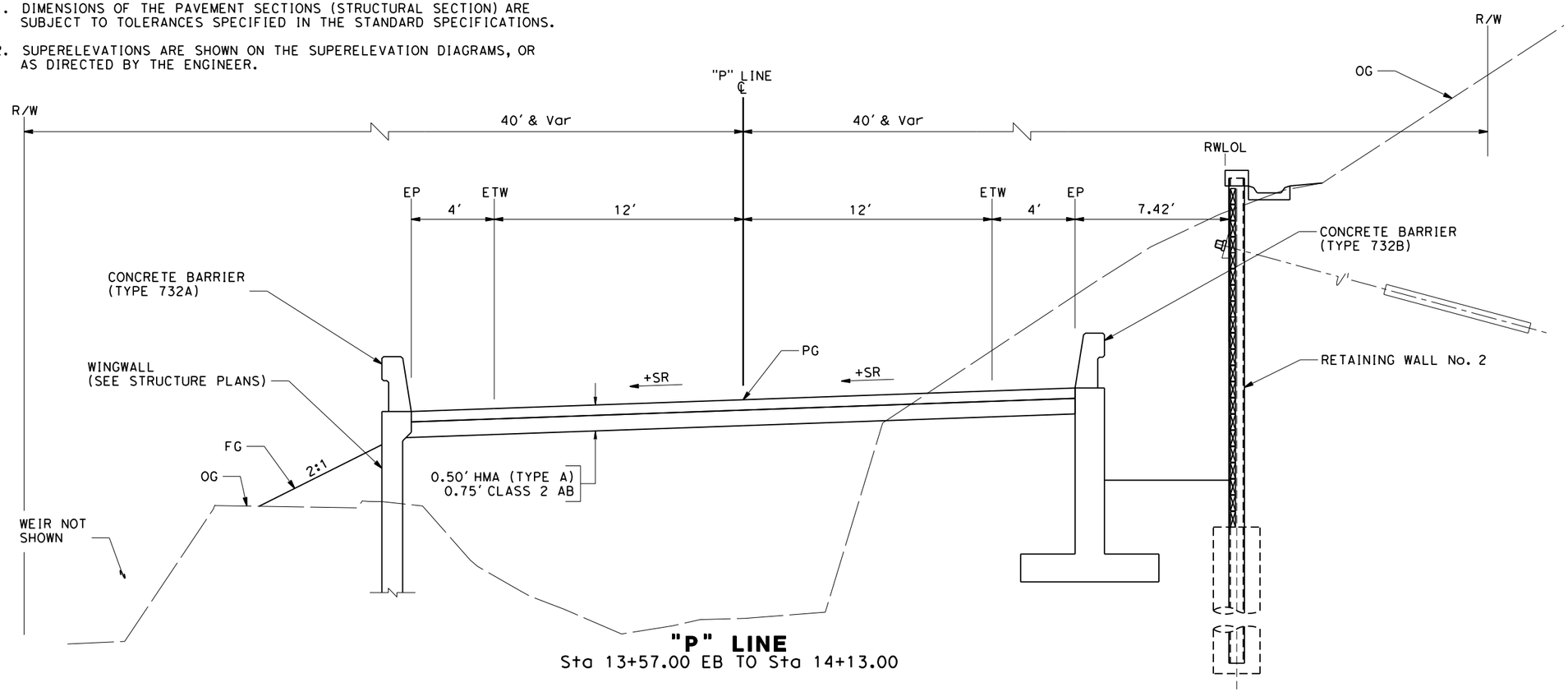

"P" LINE
Sta 13+57.00 EB TO Sta 14+13.00

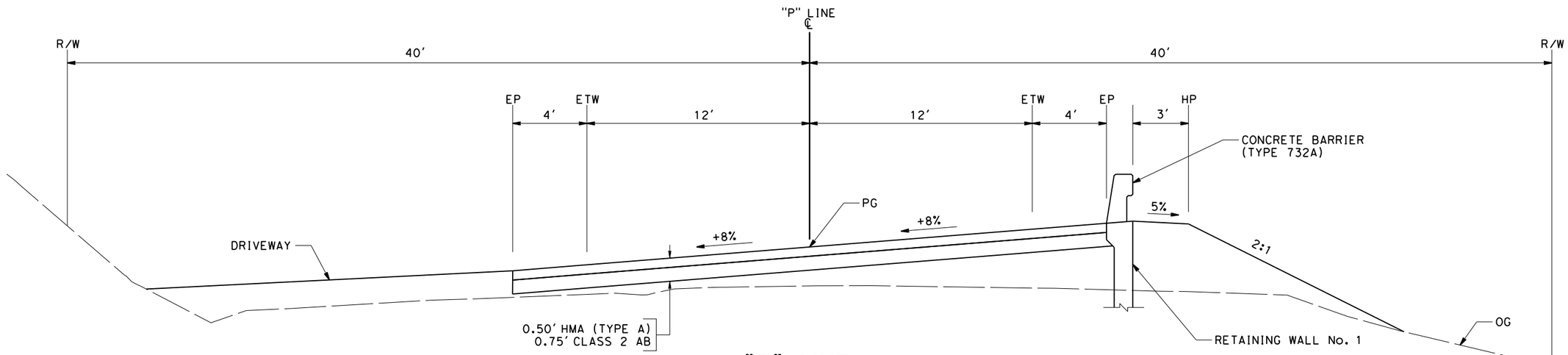

"P" LINE
Sta 11+53.00 TO Sta 12+25.00 BB

TYPICAL CROSS SECTIONS

NO SCALE

X-2

REVISED BY	DATE REVISED
ANDREW MITCHELL	01/22/13

CALCULATED-DESIGNED BY
CHECKED BY

PROJECT ENGINEER CAROLYN DAVIS

SAN BENITO DEPARTMENT OF PUBLIC WORKS

PANOCHE ROAD BRIDGE REPLACEMENT

LAST REVISION 00-00-00 | DATE PLOTTED => 11/5/2020 | TIME PLOTTED => 4:14:08 PM

Dist	COUNTY	ROUTE	SHEET No.	TOTAL SHEETS
05	SBt	PANOCHE ROAD	4	33

PRELIMINARY PLANS
REGISTERED CIVIL ENGINEER 11/05/20 DATE

PLANS APPROVAL DATE

REGISTERED PROFESSIONAL ENGINEER
Carolyn Davis
No. C58440
Exp. 12/31/20
CIVIL
STATE OF CALIFORNIA

THE STATE OF CALIFORNIA OR ITS OFFICERS OR AGENTS SHALL NOT BE RESPONSIBLE FOR THE ACCURACY OR COMPLETENESS OF SCANNED COPIES OF THIS PLAN SHEET.

QUINCY ENGINEERING
11017 Cobblerock Drive
Suite 100
Rancho Cordova, CA 95670

San Benito County - Public Works Department
2301 Technology Parkway
Hollister, CA 95023

NOTES:

1. DIMENSIONS OF THE PAVEMENT SECTIONS (STRUCTURAL SECTION) ARE SUBJECT TO TOLERANCES SPECIFIED IN THE STANDARD SPECIFICATIONS.
2. SUPERELEVATIONS ARE SHOWN ON THE SUPERELEVATION DIAGRAMS, OR AS DIRECTED BY THE ENGINEER.
3. CONSTRUCT SLOPE AND WIDTH AS SHOWN IN STANDARD PLANS FOR MBGR AND TERMINAL SYSTEMS.

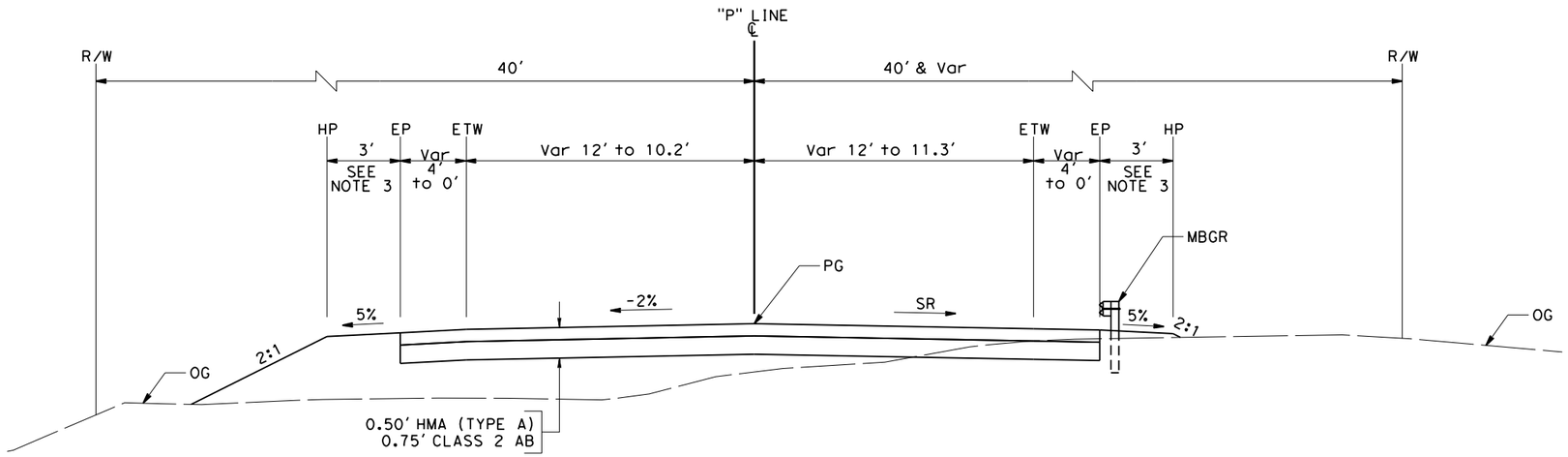

"P" LINE
Sta 14+13.00 TO Sta 16+82.41

TYPICAL CROSS SECTIONS

NO SCALE

X-3

REVISED BY	DATE REVISED
ANDREW MITCHELL	01/22/13

CALCULATED-DESIGNED BY
CHECKED BY

PROJECT ENGINEER
CAROLYN DAVIS

SAN BENITO DEPARTMENT OF PUBLIC WORKS

PANOCHE ROAD BRIDGE REPLACEMENT

LAST REVISION 00-00-00
DATE PLOTTED => 11/5/2020
TIME PLOTTED => 4:14:11 PM

Dist	COUNTY	ROUTE	SHEET No.	TOTAL SHEETS
05	SBt	PANOCHE ROAD	5	33

PRELIMINARY PLANS
REGISTERED CIVIL ENGINEER — DATE 11/05/20
PLANS APPROVAL DATE

REGISTERED PROFESSIONAL ENGINEER — Carolyn Davis — No. C58440 — Exp. 12/31/20 — CIVIL — STATE OF CALIFORNIA

THE STATE OF CALIFORNIA OR ITS OFFICERS OR AGENTS SHALL NOT BE RESPONSIBLE FOR THE ACCURACY OR COMPLETENESS OF SCANNED COPIES OF THIS PLAN SHEET.

QUINCY ENGINEERING
11017 Cobblerock Drive
Suite 100
Rancho Cordova, CA 95670

San Benito County - Public Works Department
2301 Technology Parkway
Hollister, CA 95023

NOTES:

1. FOR COMPLETE RIGHT OF WAY AND ACCURATE ACCESS DATA, SEE RIGHT OF WAY RECORD MAPS AT THE COUNTY OFFICE.
2. FOR "D" LINE DRIVEWAY DETAILS, SEE CONSTRUCTION DETAILS SHEET C-1.
3. ELEVATIONS ARE BASED ON NGVD 29 DATUM.

ABBREVIATIONS:

TCE TEMPORARY CONSTRUCTION EASEMENT

CURVE DATA

No.	R	Δ	T	L
1	650.00′	22°11′50.26″	127.51′	251.82′

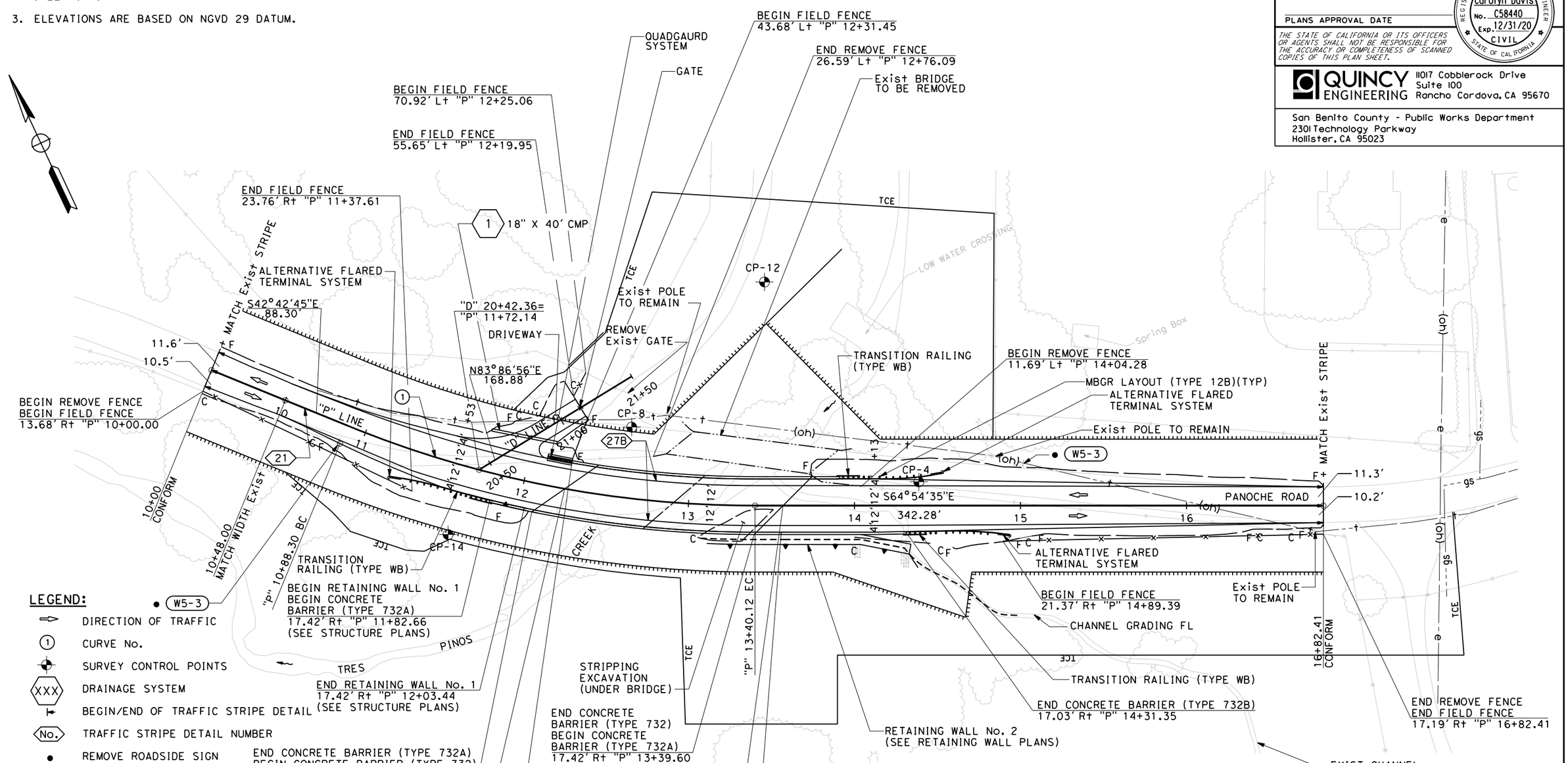

LEGEND:

- DIRECTION OF TRAFFIC
- CURVE No.
- SURVEY CONTROL POINTS
- DRAINAGE SYSTEM
- BEGIN/END OF TRAFFIC STRIPE DETAIL
- TRAFFIC STRIPE DETAIL NUMBER
- REMOVE ROADSIDE SIGN
- EXISTING ROADSIDE SIGN
- ROADSIDE SIGN NUMBER
- CUT LIMIT
- FILL LIMIT
- PROPOSED R/W
- EXISTING OH TELEPHONE UTILITY
- EXISTING GAS UTILITY
- EXISTING OH UTILITY

SURVEY CONTROL DATA

No.	NORTHING	EASTING	ELEV	LINE	STATION	OFFSET	DESCRIPTION
4	2127942.55	5955449.28	1800.07	"P"	14+38.76	14.34′ Lt	MAG NAIL PANEL
8	2128045.67	5955306.64	1796.55	"P"	12+60.42	42.68′ Lt	NAIL/TIN
12	2128090.89	5955416.12	1795.40	"P"	13+45.82	134.61′ Lt	NAIL
14	2128034.01	5955179.07	1800.45	"P"	11+64.48	42.55′ Rt	NAIL

LAYOUT

SCALE: 1"=30′

L-1

REVISED BY	DATE REVISED
ANDREW MITCHELL	01/22/13

CALCULATED-DESIGNED BY
CHECKED BY

PROJECT ENGINEER: CAROLYN DAVIS

SAN BENITO DEPARTMENT OF PUBLIC WORKS

PANOCHE ROAD BRIDGE REPLACEMENT

LAST REVISION 00-00-00 — DATE PLOTTED => 11/5/2020 — TIME PLOTTED => 4:14:21 PM

BORDER LAST REVISED 7/2/2010 — USERNAME => Andrew.Mitchell — DGN FILE => S:\Client\San Benito Cnty - S70\S70-300 Panoche Rd\CAD\roadway\S70300roa01.dgn — RELATIVE BORDER SCALE 0 1 2 3 INCHES — UNIT 0000 — PROJECT NUMBER & PHASE 00000000001

Dist	COUNTY	ROUTE	SHEET No.	TOTAL SHEETS
05	SBt	PANOCHE ROAD	6	33

PRELIMINARY PLANS
REGISTERED CIVIL ENGINEER 11/05/20 DATE

PLANS APPROVAL DATE

REGISTERED PROFESSIONAL ENGINEER Carolyn Davis No. C58440 Exp. 12/31/20 CIVIL STATE OF CALIFORNIA

THE STATE OF CALIFORNIA OR ITS OFFICERS OR AGENTS SHALL NOT BE RESPONSIBLE FOR THE ACCURACY OR COMPLETENESS OF SCANNED COPIES OF THIS PLAN SHEET.

QUINCY ENGINEERING
11017 Cobblerock Drive
Suite 100
Rancho Cordova, CA 95670

San Benito County - Public Works Department
2301 Technology Parkway
Hollister, CA 95023

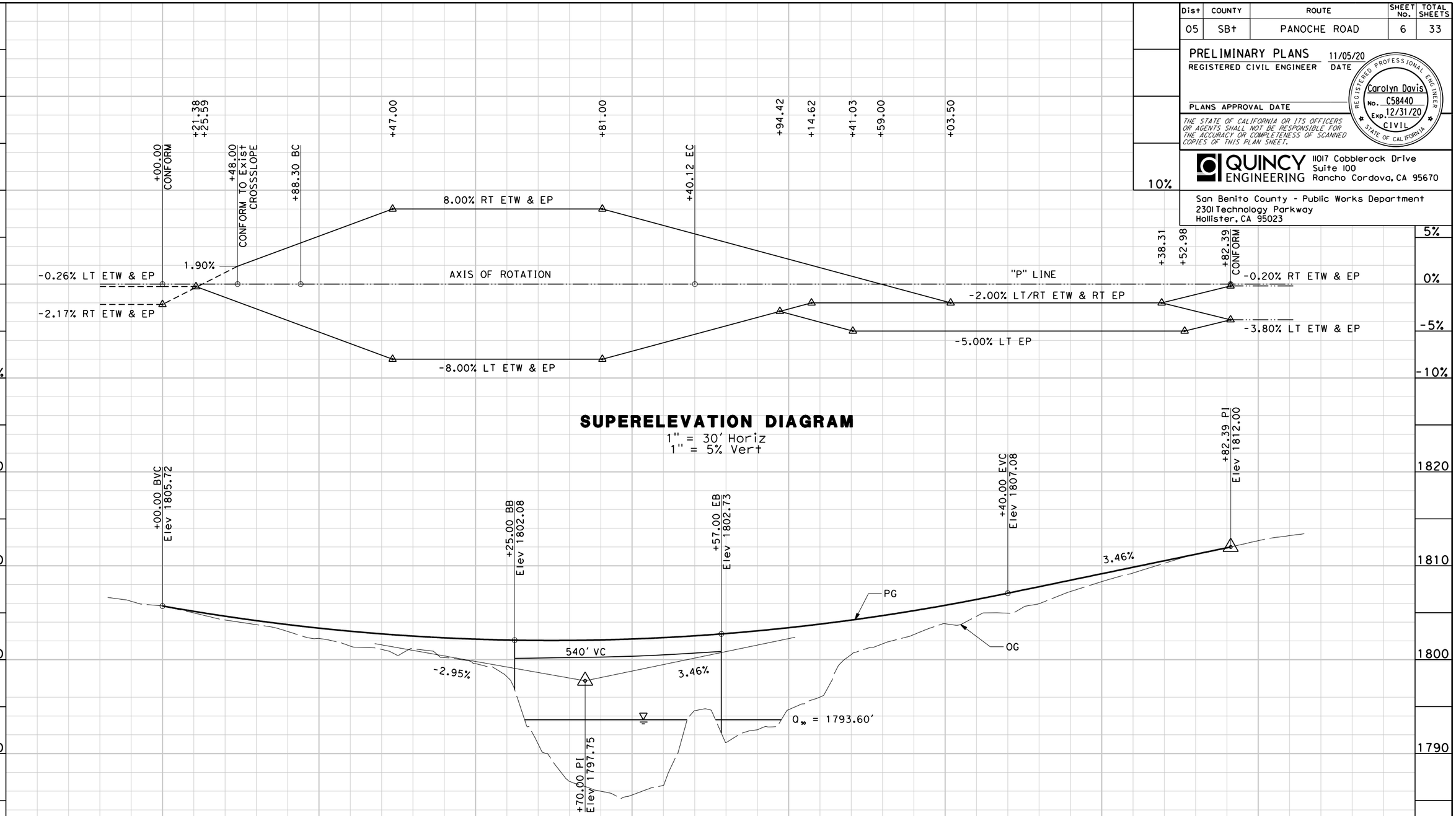

PROFILE AND SUPERELEVATION DIAGRAM

SCALE AS SHOWN

PS-1

STATION	10+00	11+00	12+00	13+00	14+00	15+00	16+00	17+00	TOTAL
CY Exc									
CY Emb									

REVISED BY: ANDREW MITCHELL
DATE REVISED: 01/22/13
CALCULATED-DESIGNED BY:
CHECKED BY:
PROJECT ENGINEER: CAROLYN DAVIS

SAN BENITO DEPARTMENT OF PUBLIC WORKS

PANOCHE ROAD BRIDGE REPLACEMENT

LAST REVISION 00-00-00
DATE PLOTTED => 11/5/2020
TIME PLOTTED => 4:14:24 PM

Dist	COUNTY	ROUTE	SHEET No.	TOTAL SHEETS
05	SBt	PANOCHE ROAD	7	33

PRELIMINARY PLANS
REGISTERED CIVIL ENGINEER 11/05/20 DATE

PLANS APPROVAL DATE

REGISTERED PROFESSIONAL ENGINEER Carolyn Davis No. C58440 Exp. 12/31/20 CIVIL STATE OF CALIFORNIA

THE STATE OF CALIFORNIA OR ITS OFFICERS OR AGENTS SHALL NOT BE RESPONSIBLE FOR THE ACCURACY OR COMPLETENESS OF SCANNED COPIES OF THIS PLAN SHEET.

QUINCY ENGINEERING
11017 Cobblerock Drive
Suite 100
Rancho Cordova, CA 95670

San Benito County - Public Works Department
2301 Technology Parkway
Hollister, CA 95023

NOTES:

1. FOR PIPE DETAILS, SEE DRAINAGE PLANS.

LEGEND:

(RP) RADIUS POINT

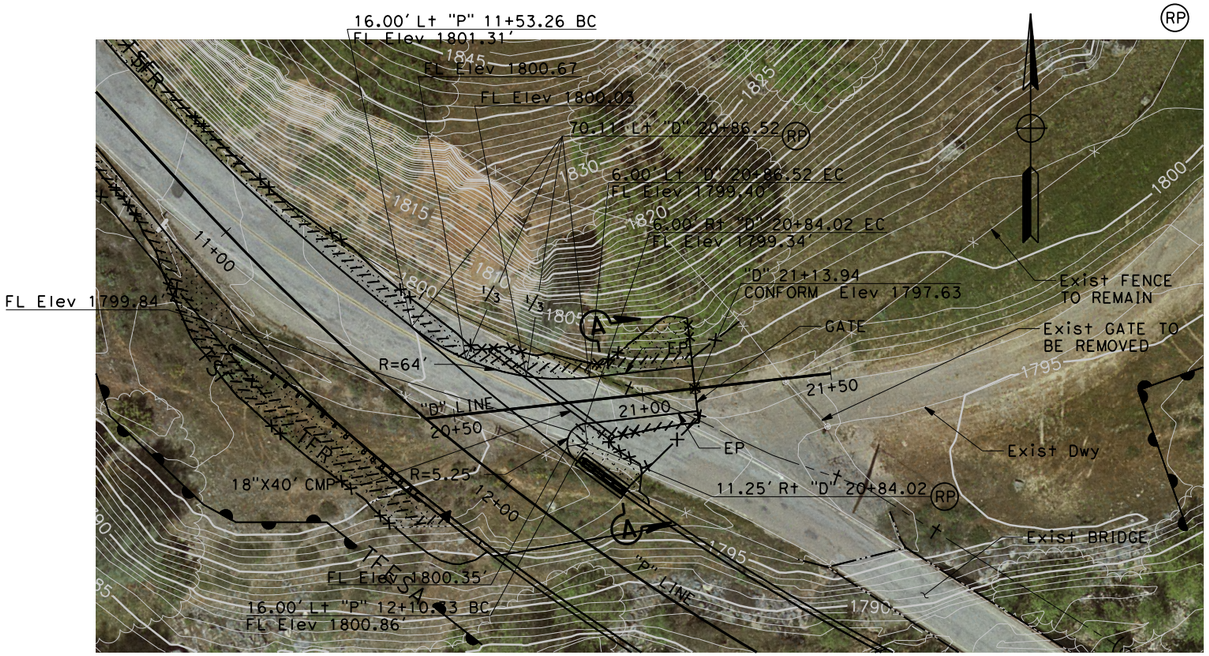

"D" LINE DRIVEWAY

SCALE 1"=20'

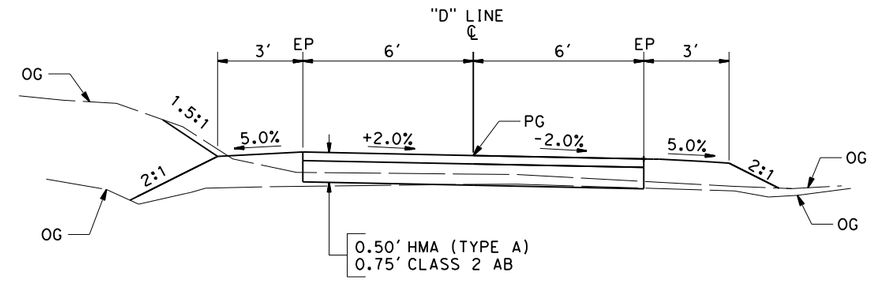

"D" LINE DRIVEWAY SECTION A-A

NO SCALE

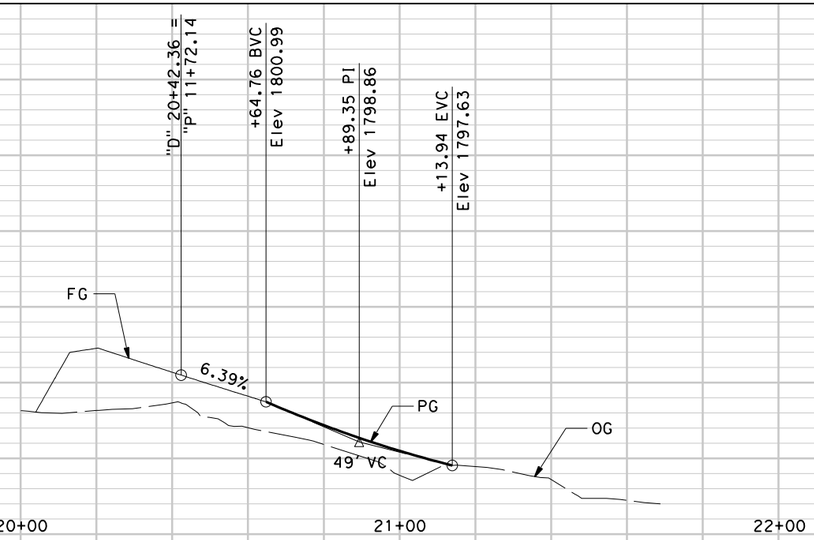

"D" LINE PROFILE

Horiz 1" = 20'
Vert 1" = 4'

CONSTRUCTION DETAILS

SCALE AS SHOWN

C-1

STATION		
CY	Exc	
	Emb	

TOTAL

REVISED BY	ANDREW MITCHELL
DATE REVISED	01/22/13
CALCULATED-DESIGNED BY	
CHECKED BY	
PROJECT ENGINEER	CAROLYN DAVIS

SAN BENITO DEPARTMENT OF PUBLIC WORKS

PANOCHE ROAD BRIDGE REPLACEMENT

LAST REVISION 00-00-00

DATE PLOTTED => 11/5/2020
TIME PLOTTED => 4:14:29 PM

Dist	COUNTY	ROUTE	SHEET No.	TOTAL SHEETS
05	SBt	PANOCHE ROAD	8	33

PRELIMINARY PLANS
REGISTERED CIVIL ENGINEER 11/05/20 DATE

REGISTERED PROFESSIONAL ENGINEER
Carolyn Davis
No. C58440
Exp. 12/31/20
CIVIL
STATE OF CALIFORNIA

PLANS APPROVAL DATE

THE STATE OF CALIFORNIA OR ITS OFFICERS OR AGENTS SHALL NOT BE RESPONSIBLE FOR THE ACCURACY OR COMPLETENESS OF SCANNED COPIES OF THIS PLAN SHEET.

QUINCY ENGINEERING
11017 Cobblerock Drive
Suite 100
Rancho Cordova, CA 95670

San Benito County - Public Works Department
2301 Technology Parkway
Hollister, CA 95023

NOTES:

1. FOR QUADGUARD SYSTEM DETAILS NOT SHOWN, SEE MANUFACTURER SPECIFICATIONS.
2. FOR STRIPPING EXCAVATION LOCATION, SEE CONSTRUCTION DETAILS SHEET C-3.

DESIGN SPEED (MPH)	NO. OF BAYS	UNIT EFFECTIVE LENGTH	PAD LENGTH
45	4	14'-8"	15'-0"

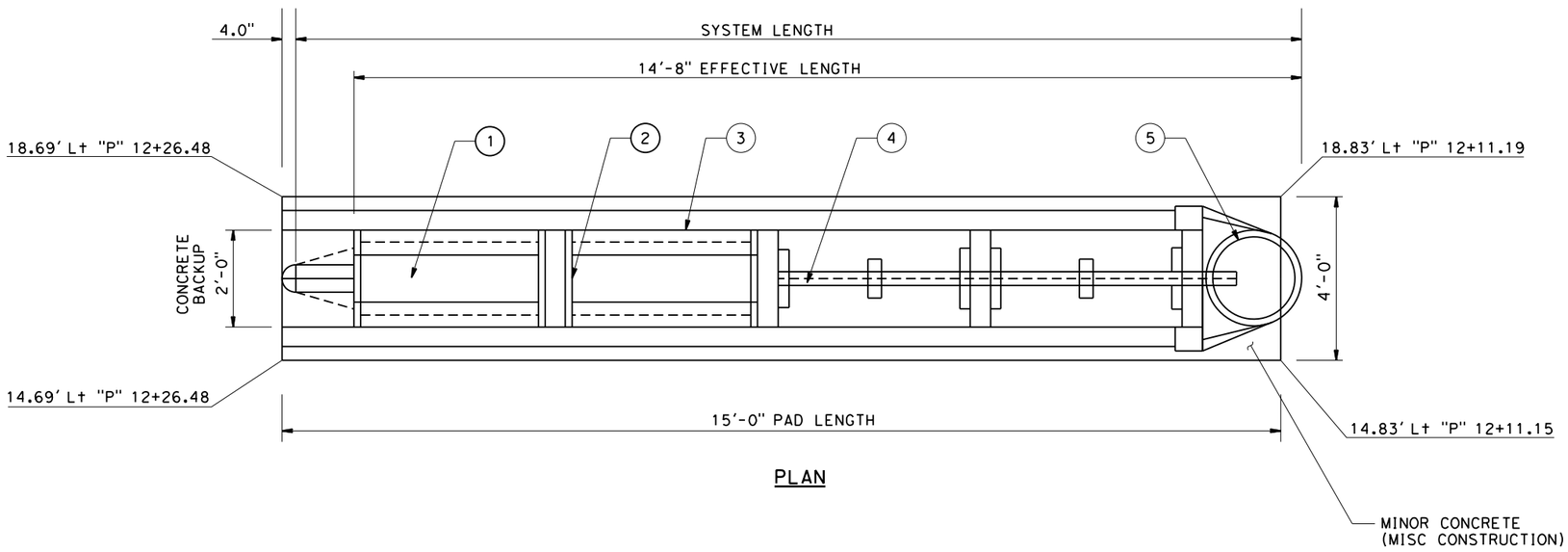

PLAN

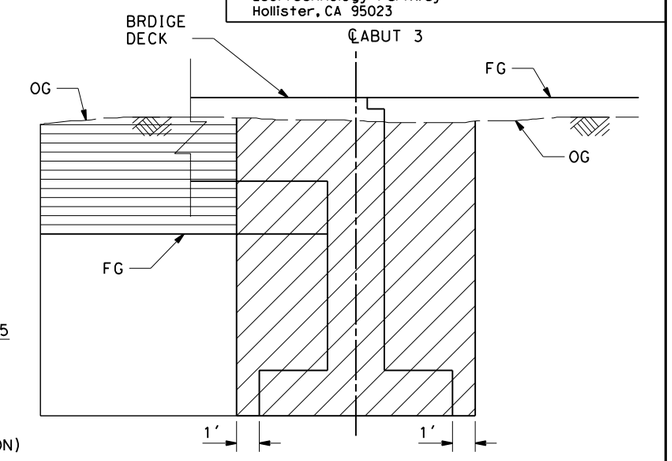

STRIPPING EXCAVATION

SEE NOTE 2

LEGEND:

ROADWAY EXCAVATION

STRUCTURE EXCAVATION

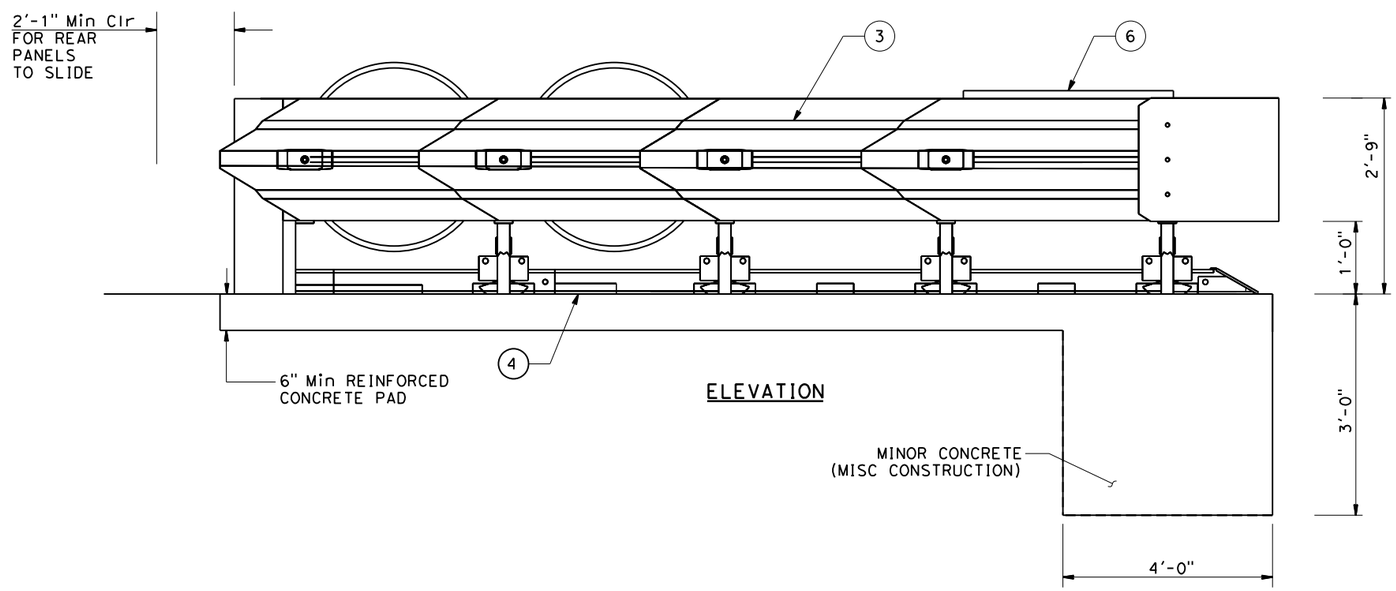

ELEVATION

KEY:

1. QUADGUARD CYLINDER
2. DIAPHRAGM
3. FENDER PANEL
4. MONORAIL
5. NOSE ASSEMBLY
6. HIT INDICATOR

QUADGUARD SYSTEM

CONSTRUCTION DETAILS

NO SCALE

C-2

REVISED BY	DATE REVISED
ANDREW MITCHELL	01/22/13

CALCULATED-DESIGNED BY
CHECKED BY

PROJECT ENGINEER CAROLYN DAVIS

SAN BENITO DEPARTMENT OF PUBLIC WORKS

PANOCHE ROAD BRIDGE REPLACEMENT

LAST REVISION 00-00-00
DATE PLOTTED => 11/5/2020
TIME PLOTTED => 4:14:32 PM

Dist	COUNTY	ROUTE	SHEET No.	TOTAL SHEETS
05	SBt	PANOCHE ROAD	9	33

PRELIMINARY PLANS
REGISTERED CIVIL ENGINEER 11/05/20 DATE

PLANS APPROVAL DATE

REGISTERED PROFESSIONAL ENGINEER
Carolyn Davis
No. C58440
Exp. 12/31/20
CIVIL
STATE OF CALIFORNIA

THE STATE OF CALIFORNIA OR ITS OFFICERS OR AGENTS SHALL NOT BE RESPONSIBLE FOR THE ACCURACY OR COMPLETENESS OF SCANNED COPIES OF THIS PLAN SHEET.

QUINCY ENGINEERING
11017 Cobblerock Drive
Suite 100
Rancho Cordova, CA 95670

San Benito County - Public Works Department
2301 Technology Parkway
Hollister, CA 95023

NOTES:

1. THIS PLAN ACCURATE FOR EROSION CONTROL ONLY
2. FENCE LOCATIONS ARE APPROXIMATE. ACTUAL LOCATIONS TO BE DETERMINED BY THE ENGINEER.

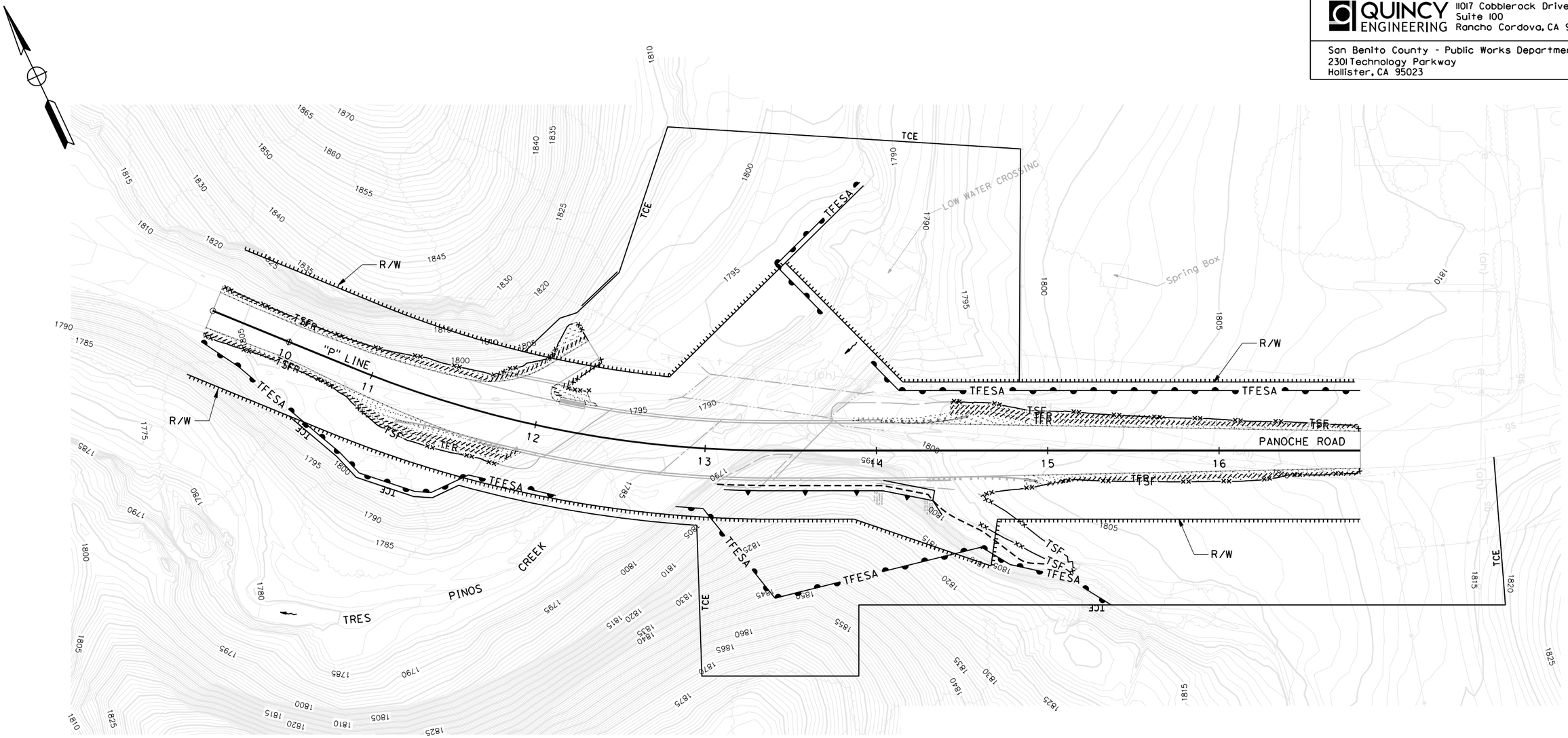

LEGEND:

- TFR — TEMPORARY FIBER ROLL
- TSF — TEMPORARY SILT FENCE
- TFESA — TEMPORARY FENCE (TYPE ESA)
- EROSION CONTROL (HYDROSEED)

CONSTRUCTION DETAILS

SCALE: 1"=30'

C-3

REVISED BY	DATE REVISED
ANDREW MITCHELL	01/22/13

CALCULATED-DESIGNED BY
CHECKED BY

PROJECT ENGINEER: CAROLYN DAVIS

SAN BENITO DEPARTMENT OF PUBLIC WORKS

PANOCHE ROAD BRIDGE REPLACEMENT

LAST REVISION 00-00-00 | DATE PLOTTED => 11/5/2020 | TIME PLOTTED => 4:14:43 PM

Dist	COUNTY	ROUTE	SHEET No.	TOTAL SHEETS
05	SBt	PANOCHE ROAD		33

PRELIMINARY PLANS
REGISTERED CIVIL ENGINEER 11/05/20 DATE

PLANS APPROVAL DATE

REGISTERED PROFESSIONAL ENGINEER Carolyn Davis No. C58440 Exp. 12/31/20 CIVIL STATE OF CALIFORNIA

THE STATE OF CALIFORNIA OR ITS OFFICERS OR AGENTS SHALL NOT BE RESPONSIBLE FOR THE ACCURACY OR COMPLETENESS OF SCANNED COPIES OF THIS PLAN SHEET.

QUINCY ENGINEERING
11017 Cobblerock Drive
Suite 100
Rancho Cordova, CA 95670

San Benito County - Public Works Department
2301 Technology Parkway
Hollister, CA 95023

NOTES:

1. THIS PLAN ACCURATE FOR CONTOUR GRADING WORK AND RSP ONLY.
2. PLACE RSP AT SPECIFIED LOCATION, IF BEDROCK IS ENCOUNTERED WITHIN EXCAVATION LIMITS, PLACE RSP AND FABRIC DIRECTLY ON BEDROCK.
3. FOR SECTION D-D, E-E & G-G, SEE CONSTRUCTION DETAILS SHEET C-5.
4. FOR WEIR LOCATION, SEE LAYOUT SHEET L-1.

LEGEND:

- LIMITS OF RSP (CLASS IV, METHOD B)
- DIRECTION OF FLOW LINE
- STRIPPING EXCAVATION
- LIMITS OF RSP (CLASS V, METHOD B)
- LIMITS OF RSP (CLASS VIII, METHOD A)
- LIMITS OF RSP (CLASS III, METHOD B)
- LIMITS OF RSP (CLASS IV, METHOD B)

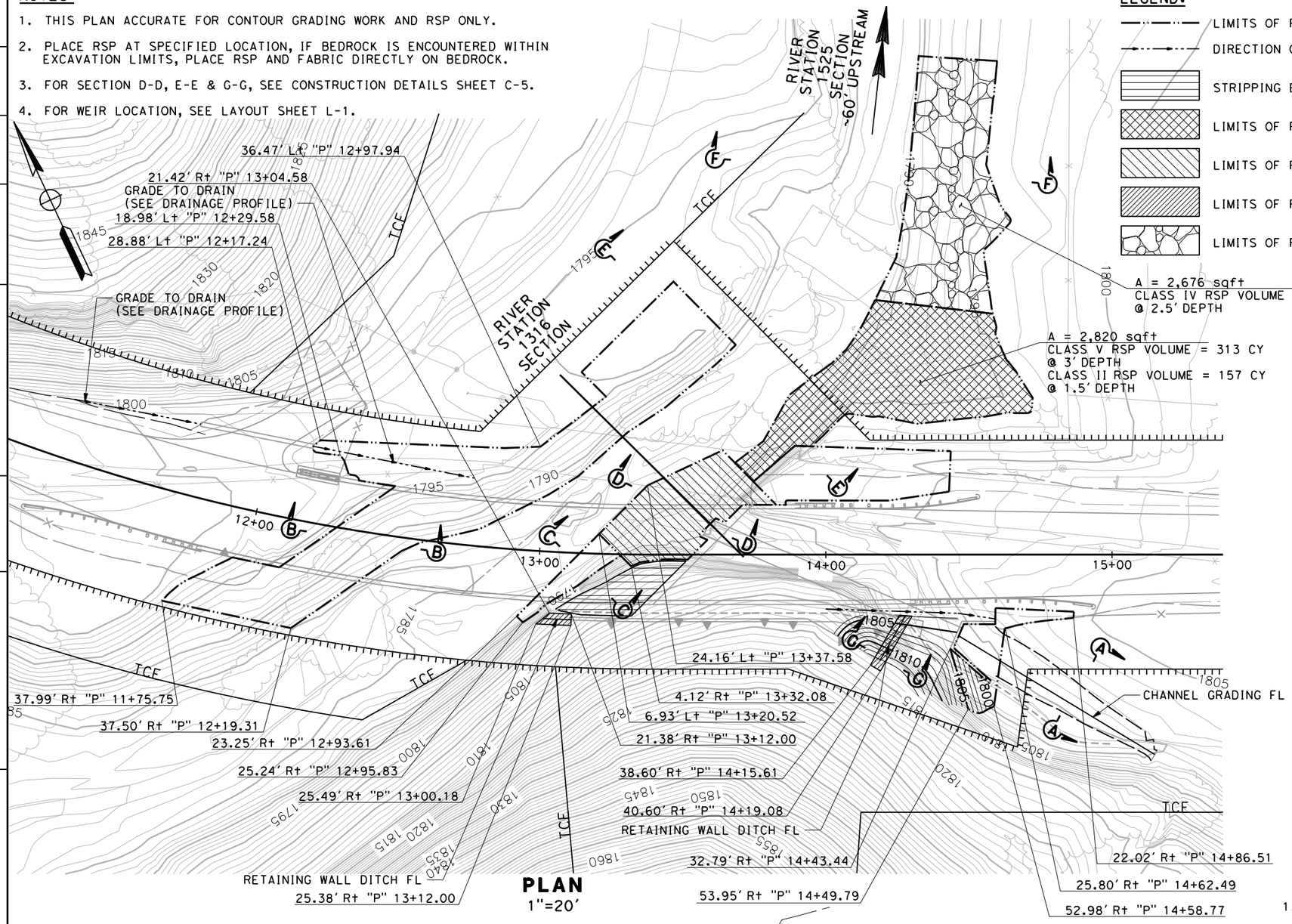

PLAN
1"=20'

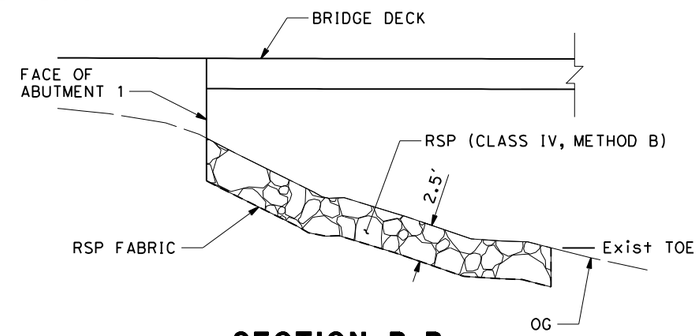

SECTION B-B
NO BEDROCK WITHIN RSP EXCAVATION LIMITS
NO SCALE

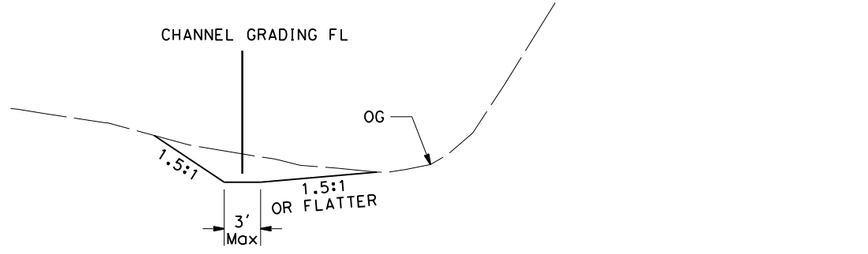

SECTION A-A
NO SCALE

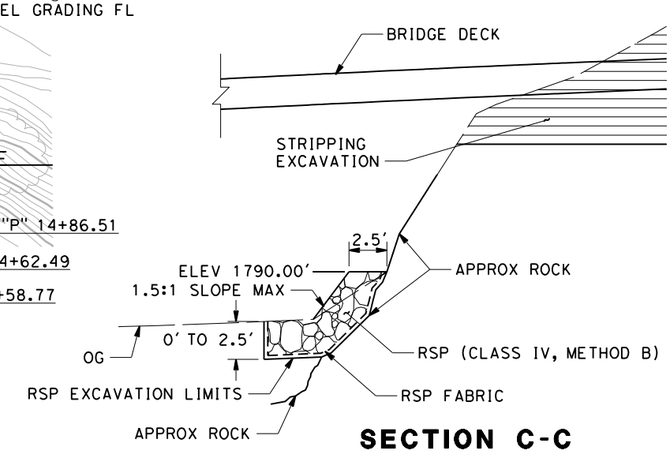

SECTION C-C
RSP ON EXPOSED BEDROCK
NO SCALE
SEE NOTE 2

CONSTRUCTION DETAILS

SCALE AS SHOWN

C-4

REVISED BY	DATE REVISED
ANDREW MITCHELL	01/22/13

CALCULATED-DESIGNED BY
CHECKED BY

PROJECT ENGINEER CAROLYN DAVIS

SAN BENITO DEPARTMENT OF PUBLIC WORKS

PANOCHE ROAD BRIDGE REPLACEMENT

LAST REVISION 00-00-00 | DATE PLOTTED => 11/5/2020 | TIME PLOTTED => 4:14:47 PM

Dist	COUNTY	ROUTE	SHEET No.	TOTAL SHEETS
05	SBt	PANOCHE ROAD	11	33

PRELIMINARY PLANS
REGISTERED CIVIL ENGINEER 11/05/20 DATE
PLANS APPROVAL DATE

REGISTERED PROFESSIONAL ENGINEER Carolyn Davis No. C58440 Exp. 12/31/20 CIVIL STATE OF CALIFORNIA

THE STATE OF CALIFORNIA OR ITS OFFICERS OR AGENTS SHALL NOT BE RESPONSIBLE FOR THE ACCURACY OR COMPLETENESS OF SCANNED COPIES OF THIS PLAN SHEET.

QUINCY ENGINEERING
11017 Cobblerock Drive
Suite 100
Rancho Cordova, CA 95670

San Benito County - Public Works Department
2301 Technology Parkway
Hollister, CA 95023

NOTES:

1. EXCAVATE SOIL 2' BELOW STREAM TO PLACE RSP. IF BEDROCK IS ENCOUNTERED WITHIN RSP EXCAVATION LIMITS, PLACE RSP AND RSP FABRIC DIRECTLY ON BEDROCK. TO BE DETERMINED BY ENGINEER.
2. USE JETTED CLEAN SAND OR HAND TAMPED SAND/GRAVEL MATERIAL TO FILL VOIDS.
3. PLACE RSP AT MINIMUM DEPTH 3.8'. IF BEDROCK IS ENCOUNTERED WITHIN RSP EXCAVATION LIMITS, PLACE RSP AND FABRIC DIRECTLY ON BEDROCK.
4. FOR RSP LIMITS AND SECTION D-D, E-E, G-G LOCATIONS, SEE CONSTRUCTION DETAILS SHEET C-4.

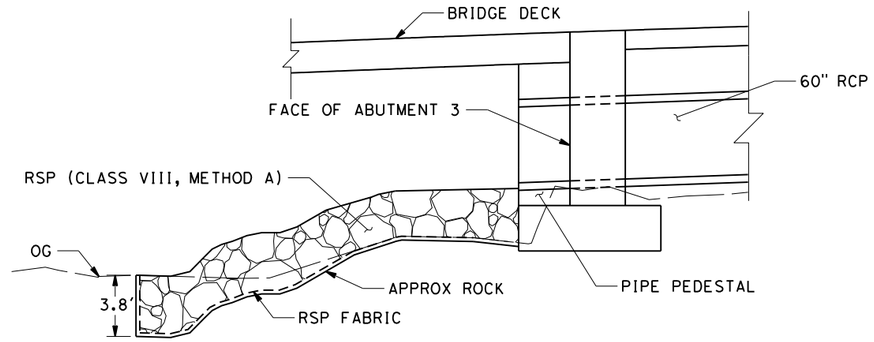

SECTION D-D
SEE NOTE 3

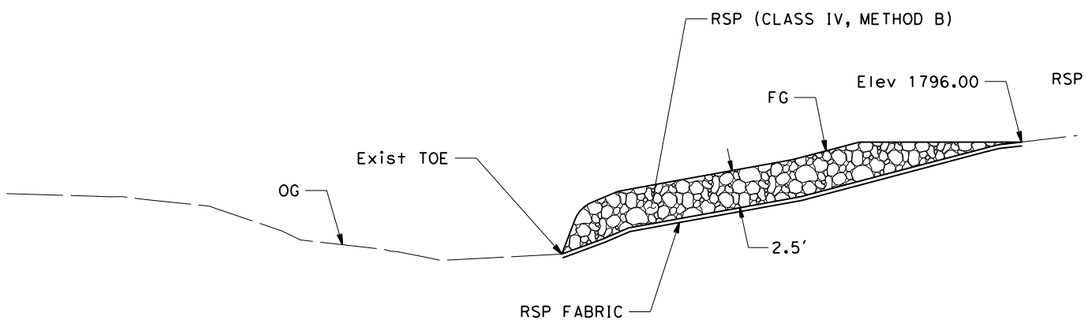

SECTION F-F

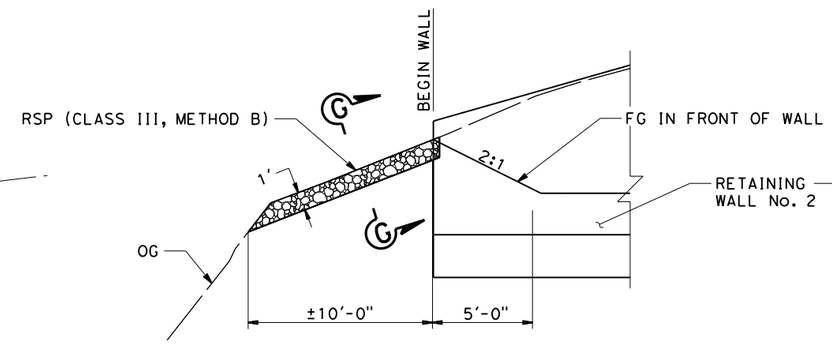

ELEVATION OF RETAINING WALL DITCH

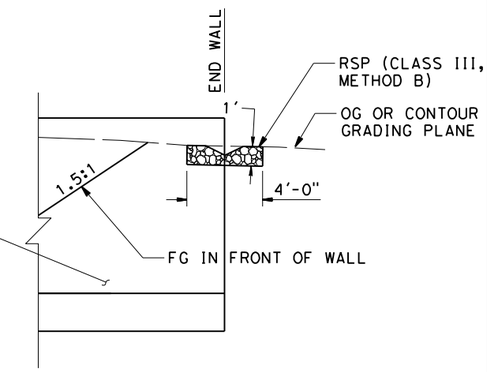

ELEVATION
SEE SECTION G-G

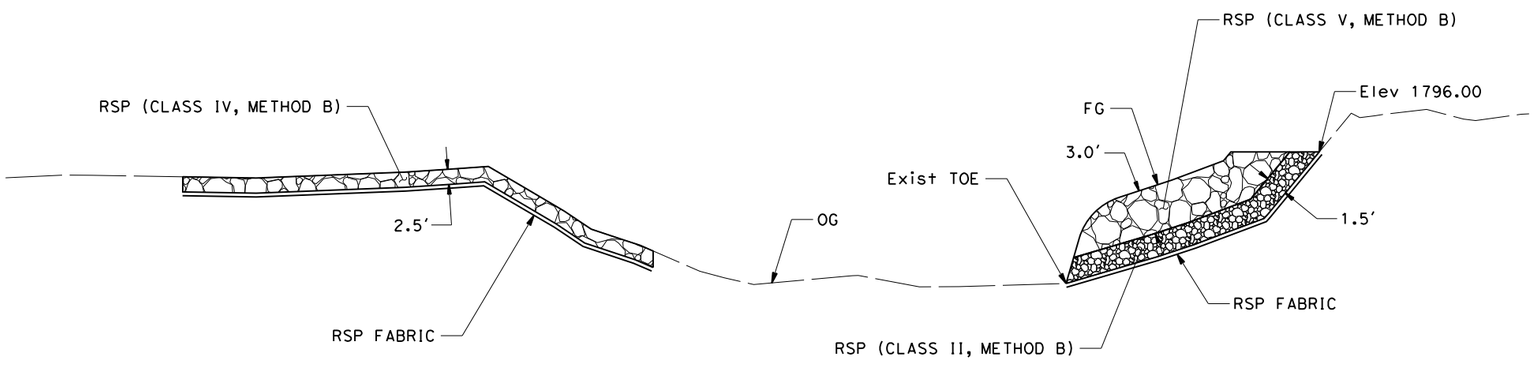

SECTION E-E

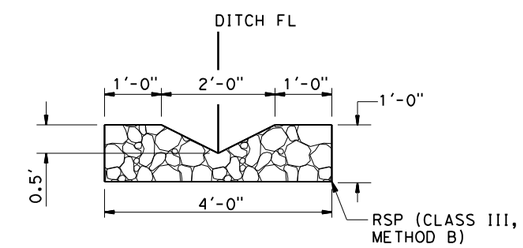

SECTION G-G
RETAINING WALL DITCH

CONSTRUCTION DETAILS

NO SCALE

C-5

REVISED BY	DATE REVISED
	01/22/13

ANDREW MITCHELL
CALCULATED-DESIGNED BY
CHECKED BY
PROJECT ENGINEER CAROLYN DAVIS

SAN BENITO DEPARTMENT OF PUBLIC WORKS
PANOCHE ROAD BRIDGE REPLACEMENT

LAST REVISION 00-00-00
DATE PLOTTED => 11/5/2020
TIME PLOTTED => 4:14:50 PM

Dist	COUNTY	ROUTE	SHEET No.	TOTAL SHEETS
05	SBt	PANOCHE ROAD	12	33

PRELIMINARY PLANS
REGISTERED CIVIL ENGINEER 11/05/20 DATE

PLANS APPROVAL DATE

REGISTERED PROFESSIONAL ENGINEER Carolyn Davis No. C58440 Exp. 12/31/20 CIVIL STATE OF CALIFORNIA

THE STATE OF CALIFORNIA OR ITS OFFICERS OR AGENTS SHALL NOT BE RESPONSIBLE FOR THE ACCURACY OR COMPLETENESS OF SCANNED COPIES OF THIS PLAN SHEET.

QUINCY ENGINEERING
11017 Cobblerock Drive
Suite 100
Rancho Cordova, CA 95670

San Benito County - Public Works Department
2301 Technology Parkway
Hollister, CA 95023

NOTES:

1. THIS PLAN ACCURATE FOR DRAINAGE WORK ONLY.
2. CALL OUTS TO DRAINAGE STRUCTURES ARE REFERENCED TO CENTERLINE OF STRUCTURES AT FLOW LINE.
3. CONTRACTOR SHALL POSITIVELY DETERMINE ALL HORIZONTAL AND VERTICAL LOCATIONS OF ALL UTILITIES PRIOR TO CONSTRUCTION OF ANY COMPONENT OF ANY DRAINAGE SYSTEM IN ORDER TO VERIFY CONSTRUCTABILITY OF THE DRAINAGE SYSTEM AS SHOWN ON PLANS.
4. FOR RSP AND GRADING DETAILS, SEE CONSTRUCTION DETAILS.

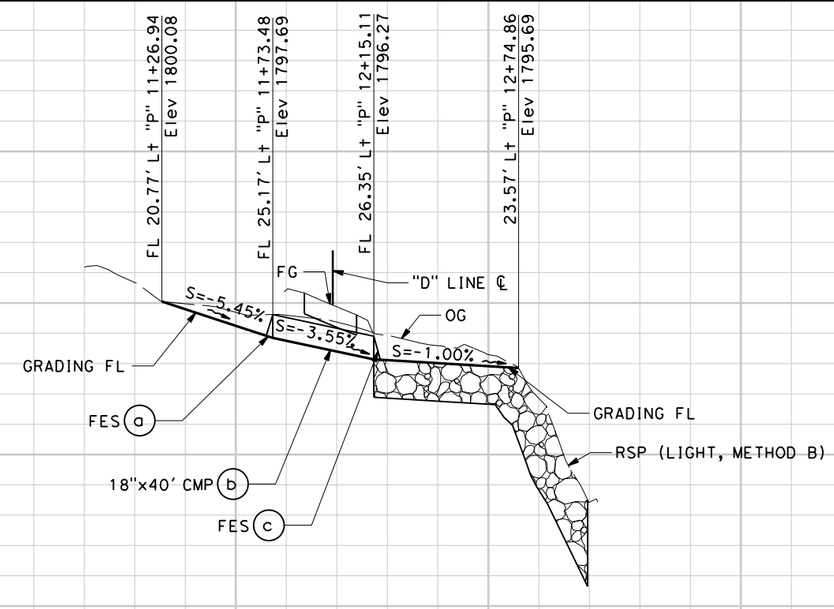

DRAINAGE SYSTEM No. 1
STA "P" 11+26.94 TO 12+74.86

1800
1790
1780
1810

DRAINAGE PROFILE
SCALE: Horiz 1"=30'
Vert 1"=5'

DP-1

STATION		TOTAL
CY	Exc	
	Emb	

REVISED BY: ANDREW MITCHELL
DATE REVISED: 01/22/13
CALCULATED-DESIGNED BY:
CHECKED BY:
PROJECT ENGINEER: CAROLYN DAVIS

SAN BENITO DEPARTMENT OF PUBLIC WORKS
PANOCHE ROAD BRIDGE REPLACEMENT

LAST REVISION 00-00-00
DATE PLOTTED => 11/5/2020
TIME PLOTTED => 4:14:53 PM

Dist	COUNTY	ROUTE	SHEET No.	TOTAL SHEETS
05	SBt	PANOCHE ROAD	13	33

PRELIMINARY PLANS
REGISTERED CIVIL ENGINEER 11/05/20 DATE

PLANS APPROVAL DATE

REGISTERED PROFESSIONAL ENGINEER
Carolyn Davis
No. C58440
Exp. 12/31/20
CIVIL
STATE OF CALIFORNIA

THE STATE OF CALIFORNIA OR ITS OFFICERS OR AGENTS SHALL NOT BE RESPONSIBLE FOR THE ACCURACY OR COMPLETENESS OF SCANNED COPIES OF THIS PLAN SHEET.

QUINCY ENGINEERING
11017 Cobblerock Drive
Suite 100
Rancho Cordova, CA 95670

San Benito County - Public Works Department
2301 Technology Parkway
Hollister, CA 95023

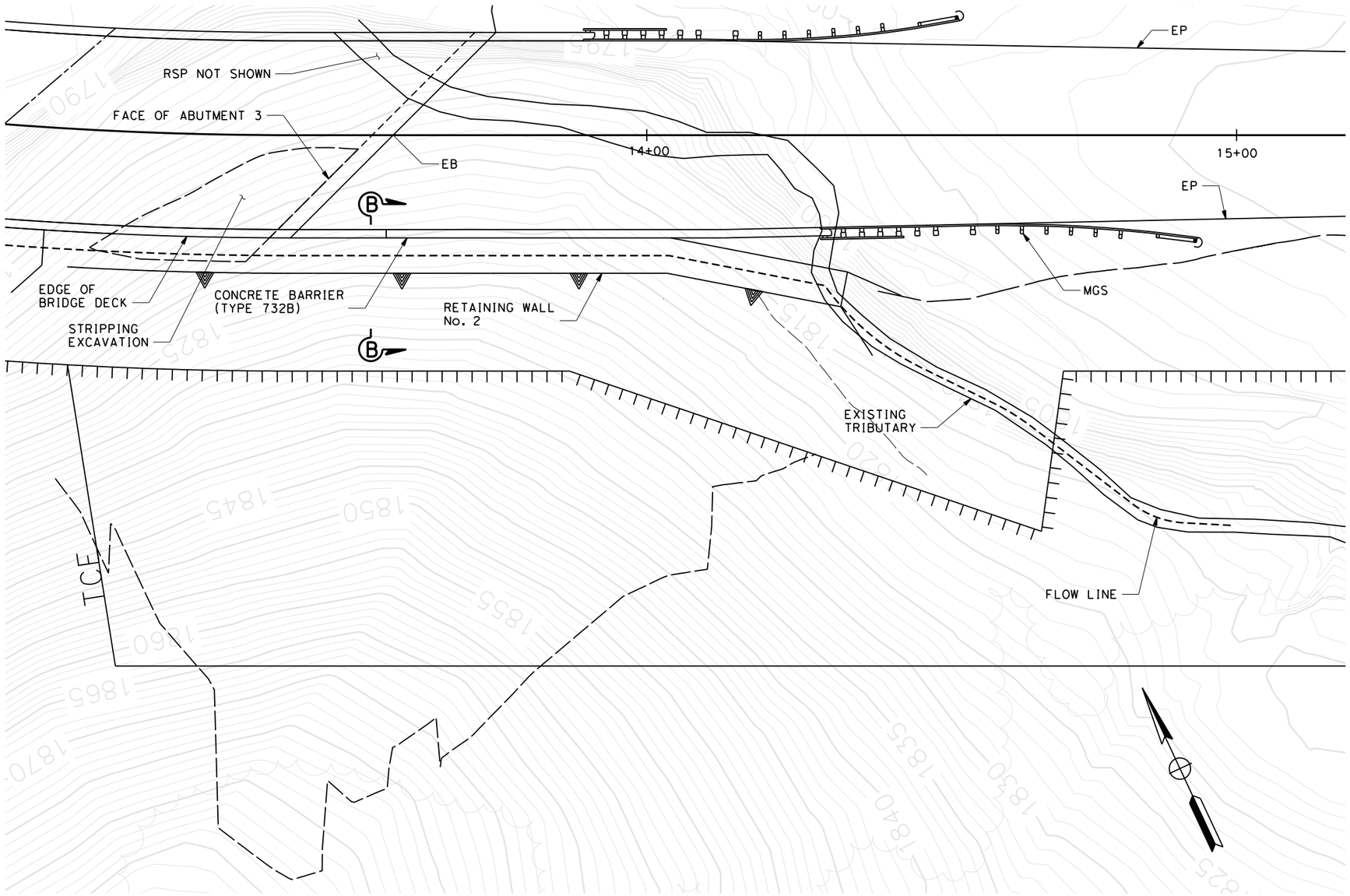

PLAN

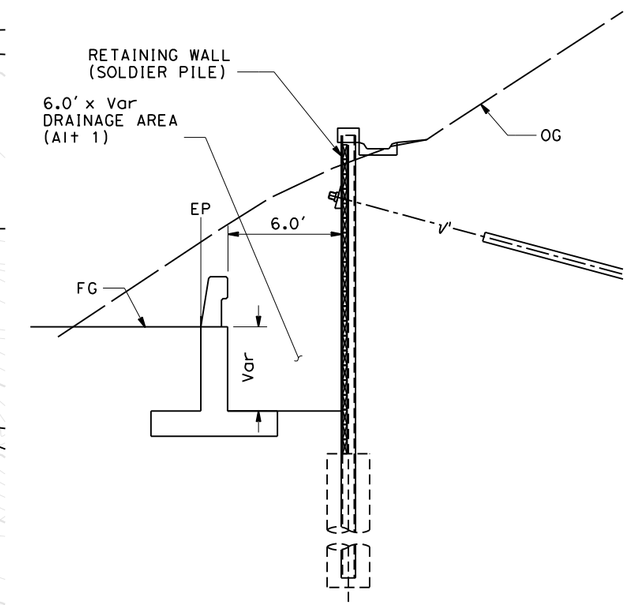

SECTION A-A
RETAINING WALL
No. 1

LEGEND:

——— CHANNEL BYPASS

DRAINAGE DETAILS

NO SCALE

DD-1

REVISED BY	DATE REVISED
ANDREW MITCHELL	01/22/13

CALCULATED-DESIGNED BY
CHECKED BY

PROJECT ENGINEER
CAROLYN DAVIS

SAN BENITO DEPARTMENT OF PUBLIC WORKS

PANOCHE ROAD BRIDGE REPLACEMENT

LAST REVISION 00-00-00
DATE PLOTTED => 11/5/2020
TIME PLOTTED => 4:14:59 PM

Dist	COUNTY	ROUTE	SHEET No.	TOTAL SHEETS
05	SBt	PANOCHE ROAD	14	33

PRELIMINARY PLANS
REGISTERED CIVIL ENGINEER 11/05/20 DATE
PLANS APPROVAL DATE

REGISTERED PROFESSIONAL ENGINEER Carolyn Davis No. C58440 Exp. 12/31/20 CIVIL STATE OF CALIFORNIA

THE STATE OF CALIFORNIA OR ITS OFFICERS OR AGENTS SHALL NOT BE RESPONSIBLE FOR THE ACCURACY OR COMPLETENESS OF SCANNED COPIES OF THIS PLAN SHEET.

QUINCY ENGINEERING
11017 Cobblerock Drive
Suite 100
Rancho Cordova, CA 95670

San Benito County - Public Works Department
2301 Technology Parkway
Hollister, CA 95023

NOTES:

1. THIS PLAN ACCURATE FOR TRAFFIC HANDLING WORK ONLY.
2. LOCATION OF CONSTRUCTION AREA SIGNS ARE APPROXIMATE, EXACT LOCATION WILL BE DETERMINED BY THE ENGINEER.
3. MAINTAIN ACCESS TO DRIVEWAYS AT ALL TIMES.
4. ABUTMENT 3 FOOTING AND LEFT WINGWALL MAY REQUIRE TEMPORARY SHORING.
5. SHORING TYPE TO BE APPROVED BY ENGINEER.
6. FOR SECTION A-A, B-B, & C-C, SEE TH-2

ABBREVIATIONS:

RPTS REMOVE PAINTED TRAFFIC STRIPE

LEGEND:

- STAGE 1-CONSTRUCT CULVERT, RETAINING WALLS, ROADWAY PORTION, BRIDGE, AND PLACE RSP PORTION.
- TEMPORARY RAILING(TYPE K)
- TEMPORARY CRASH CUSHION ARRAY
- TRAFFIC PLASTIC DRUMS
- SIGN - 1 POST
- R/W
- DIRECTION OF TRAFFIC
- (X) CONSTRUCTION AREA SIGN
- LL LIMIT LINE
- S "STOP" (TEMPORARY PAVEMENT MARKING)
- FLASHING BEACON
- (No.) ROADSIDE ROAD NUMBER
- RELOCATE ROADSIDE SIGN
- BEGIN/END OF TEMPORARY TRAFFIC STRIPE DETAIL
- (No.) TEMPORARY TRAFFIC STRIPE DETAIL No.

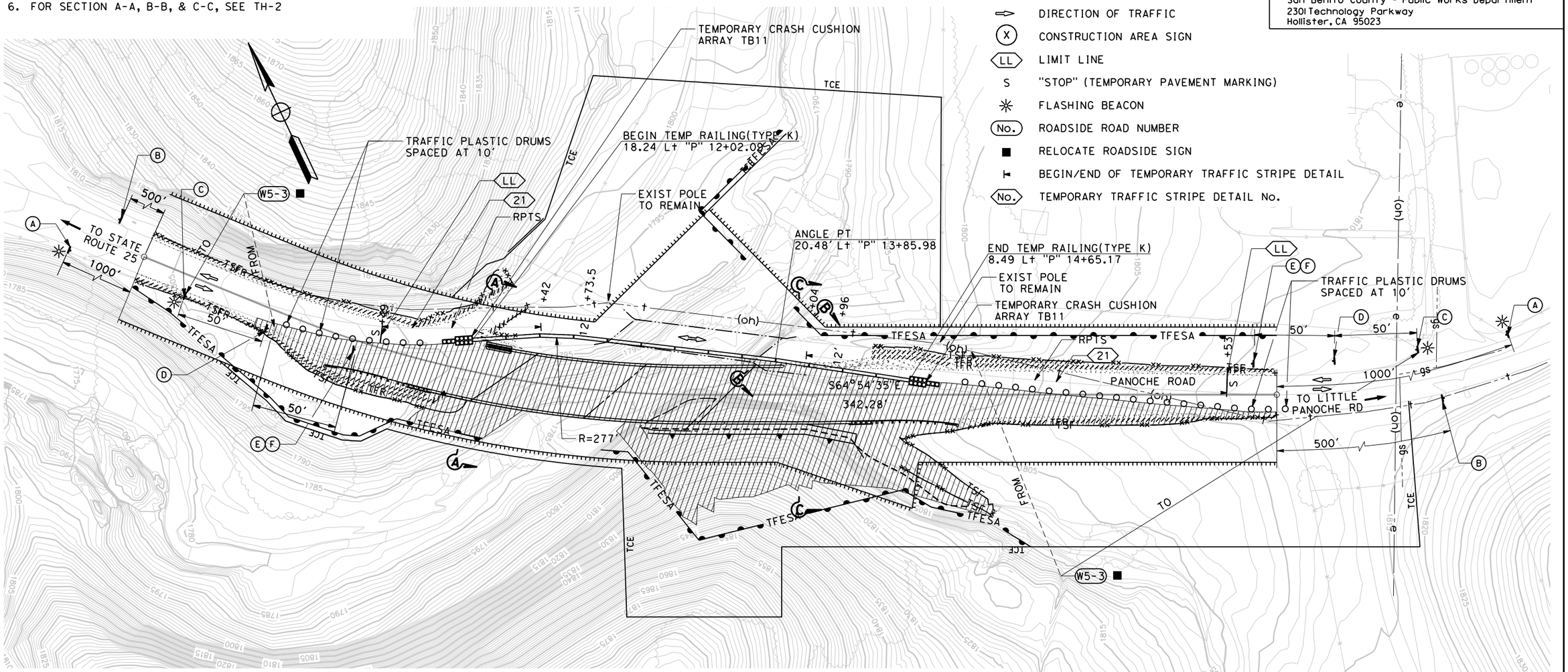

STATIONARY MOUNTED CONSTRUCTION AREA SIGNS

SIGN No. (X)	SIGN CODE FEDERAL	SIGN CODE CALIFORNIA	PANEL SIZE	SIGN MESSAGE	NUMBER OF POSTS AND SIZE	NUMBER OF SIGNS	DESCRIPTION
A	W20-1		36" x 36"	ROAD WORK AHEAD	2 - 4" x 6"	2	
B	G20-2		36" x 18"	END ROAD WORK	2 - 4" x 6"	2	
C	W13-1P		18" x 18"	25 MPH	0 -	2	MOUNT BELOW ONE LANE BRIDGE SIGN
D	W3-1		36" x 36"	STOP AHEAD SYMBOL	2 - 4" x 6"	2	
E	R1-1		30" x 30"	STOP	2 - 4" x 6"	2	
F			36" x 36"	PROCEED WHEN CLEAR	0 -	2	MOUNT BELOW STOP SIGN

TRAFFIC HANDLING AND CONSTRUCTION AREA SIGNS

SCALE: 1"=30'

TH-1

SAN BENITO DEPARTMENT OF PUBLIC WORKS
PANOCHE ROAD BRIDGE REPLACEMENT
PROJECT ENGINEER CAROLYN DAVIS
ANDREW MITCHELL
CALCULATED-DESIGNED BY
CHECKED BY
REVISED BY
DATE REVISED 01/22/13

LAST REVISION 00-00-00
DATE PLOTTED => 11/5/2020
TIME PLOTTED => 4:15:03 PM

Dist	COUNTY	ROUTE	SHEET No.	TOTAL SHEETS
05	SBt	PANOCHE ROAD	15	33

PRELIMINARY PLANS
REGISTERED CIVIL ENGINEER 11/05/20 DATE
PLANS APPROVAL DATE

REGISTERED PROFESSIONAL ENGINEER Carolyn Davis No. C58440 Exp. 12/31/20 CIVIL STATE OF CALIFORNIA

THE STATE OF CALIFORNIA OR ITS OFFICERS OR AGENTS SHALL NOT BE RESPONSIBLE FOR THE ACCURACY OR COMPLETENESS OF SCANNED COPIES OF THIS PLAN SHEET.

QUINCY ENGINEERING
11017 Cobblerock Drive
Suite 100
Rancho Cordova, CA 95670

San Benito County - Public Works Department
2301 Technology Parkway
Hollister, CA 95023

NOTES:

1. ABUTMENT 3 FOOTING AND LEFT WINGWALL MAY REQUIRE TEMPORARY SHORING.
2. SHORING TYPE TO BE APPROVED BY THE ENGINEER.
3. FOR SECTION A-A, B-B, C-C LOCATION, SEE TH-1.
4. REFER TO TYPICAL SECTION SHEETS FOR STRUCTURAL SECTION DETAILS.
5. TEMP RAILING (TYPE K) SHALL HAVE SCUPPERS TO ALLOW DRAINAGE RELIEF.
6. MAINTAIN ONE 12 FT LANE MINIMUM FROM 11+49.00 TO 16+53.00.

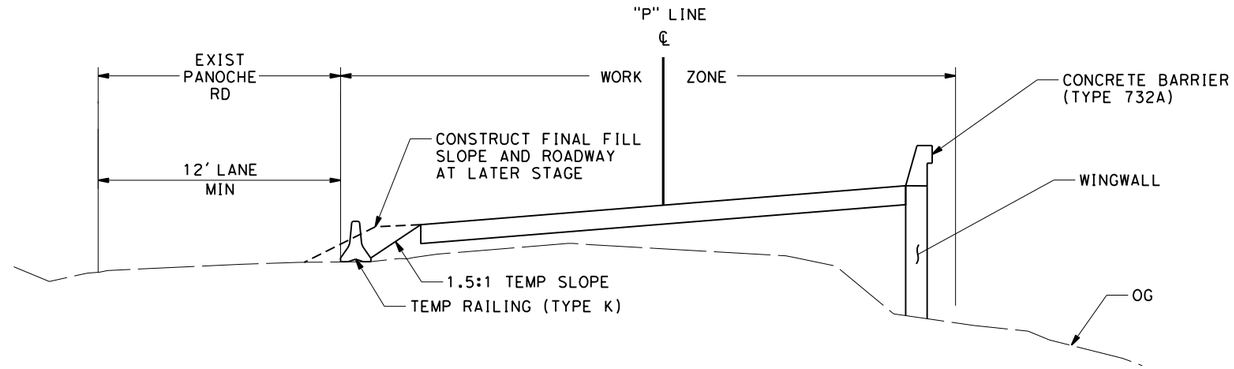

SECTION A-A

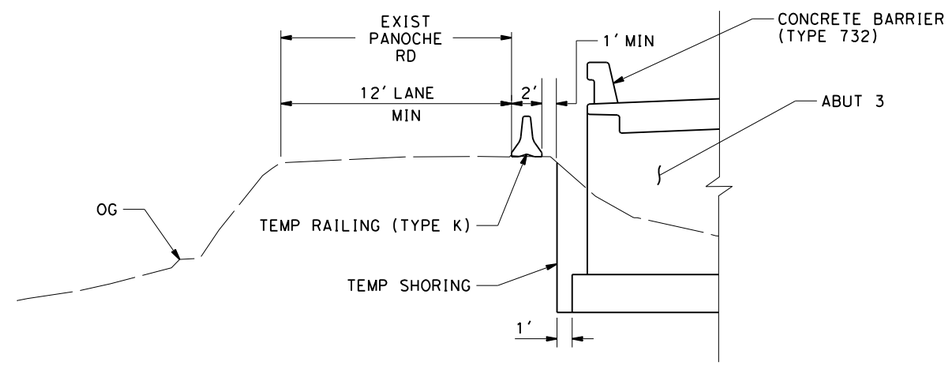

SECTION B-B

SEE NOTE 1 & 2

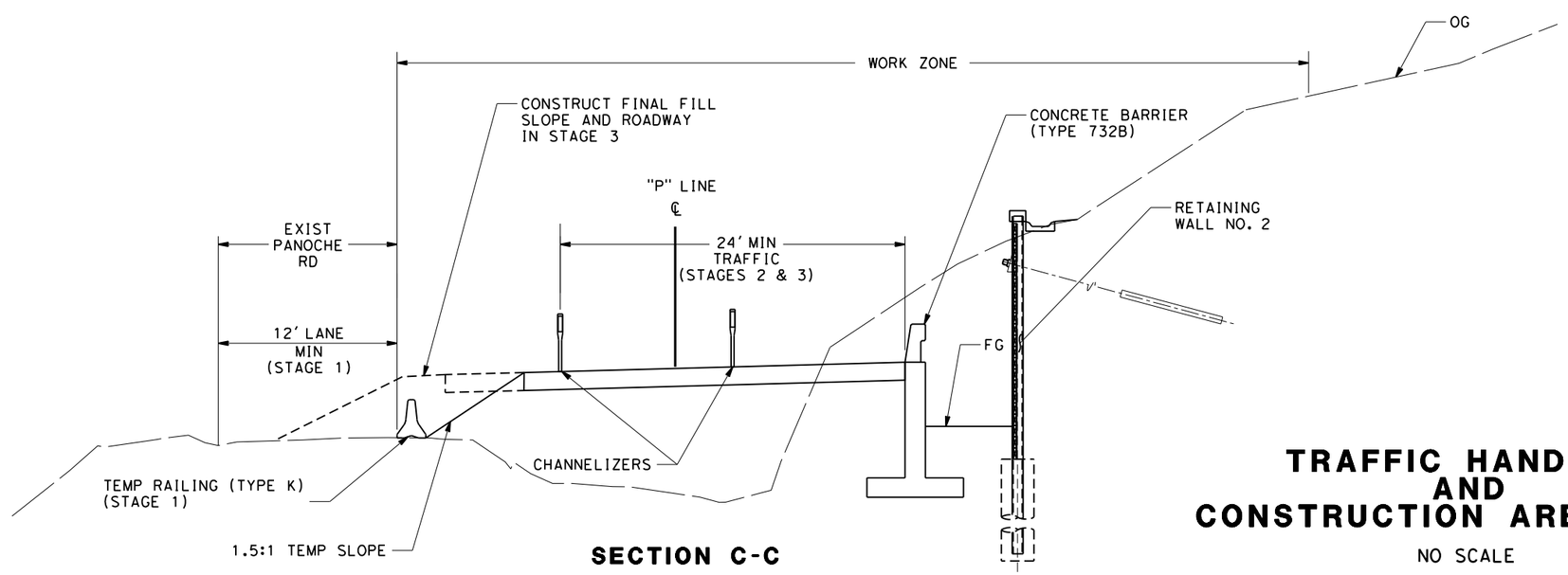

SECTION C-C

TRAFFIC HANDLING AND CONSTRUCTION AREA SIGNS

NO SCALE

TH-2

REVISED BY	DATE REVISED
	01/22/13

ANDREW MITCHELL

CALCULATED-DESIGNED BY
CHECKED BY

PROJECT ENGINEER
CAROLYN DAVIS

SAN BENITO DEPARTMENT OF PUBLIC WORKS

PANOCHE ROAD BRIDGE REPLACEMENT

LAST REVISION 00-00-00
DATE PLOTTED => 11/5/2020
TIME PLOTTED => 4:15:06 PM

Dist	COUNTY	ROUTE	SHEET No.	TOTAL SHEETS
05	SBt	PANOCHE ROAD	16	33

PRELIMINARY PLANS
REGISTERED CIVIL ENGINEER 11/05/20 DATE

REGISTERED PROFESSIONAL ENGINEER
Carolyn Davis
No. C58440
Exp. 12/31/20
CIVIL
STATE OF CALIFORNIA

PLANS APPROVAL DATE

THE STATE OF CALIFORNIA OR ITS OFFICERS OR AGENTS SHALL NOT BE RESPONSIBLE FOR THE ACCURACY OR COMPLETENESS OF SCANNED COPIES OF THIS PLAN SHEET.

QUINCY ENGINEERING
11017 Cobblerock Drive
Suite 100
Rancho Cordova, CA 95670

San Benito County - Public Works Department
2301 Technology Parkway
Hollister, CA 95023

NOTES:

1. THIS PLAN ACCURATE FOR TRAFFIC HANDLING WORK ONLY.
2. LOCATION OF CONSTRUCTION AREA SIGNS ARE APPROXIMATE, EXACT LOCATION WILL BE DETERMINED BY THE ENGINEER.
3. MAINTAIN ACCESS TO DRIVEWAYS AT ALL TIMES.
4. FOR SECTION C-C, SEE TH-2 SHEET.

LEGEND:

- STAGE 2 - REMOVE EXISTING PAVEMENT AND BRIDGE, AND COMPLETE RSP PLACEMENT
- STAGE 3 - CONSTRUCT CONFORMS AND DRIVEWAY UNDER TEMPORARY LANE CLOSURE
- CHANNELIZERS (SURFACE MOUNTED)
- SIGN - 1 POST PLACED IN STAGE 1
- R/W
- DIRECTION OF TRAFFIC
- (X) CONSTRUCTION AREA SIGN
- □ RELOCATE STATIONARY MOUNTED CONSTRUCTION AREA SIGN

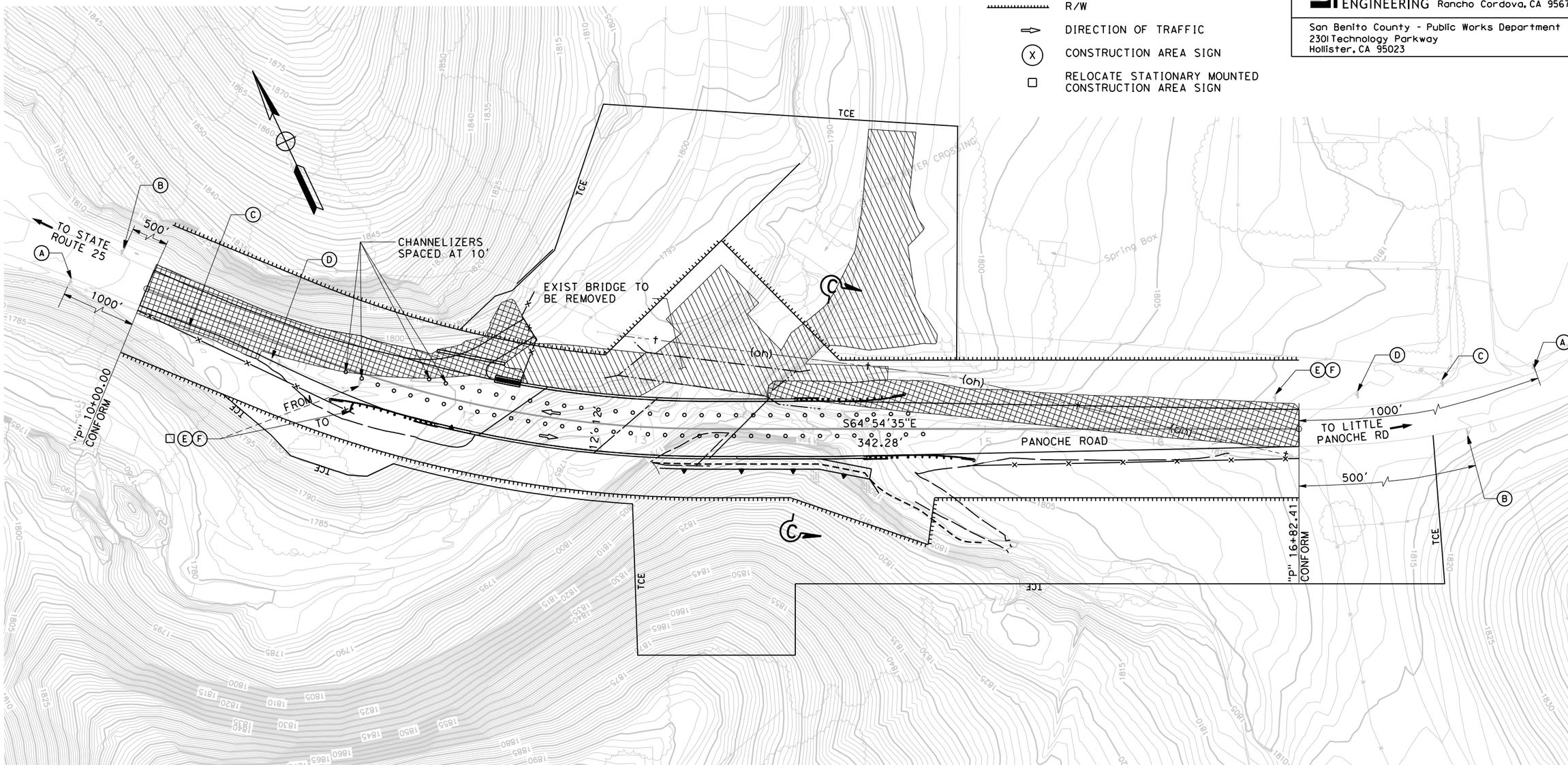

TRAFFIC HANDLING AND CONSTRUCTION AREA SIGNS

SCALE: 1"=30'

TH-3

REVISED BY	DATE REVISED
ANDREW MITCHELL	01/22/13

CALCULATED-DESIGNED BY
CHECKED BY

PROJECT ENGINEER
CAROLYN DAVIS

SAN BENITO DEPARTMENT OF PUBLIC WORKS
PANOCHE ROAD BRIDGE REPLACEMENT

LAST REVISION 00-00-00 | DATE PLOTTED => 11/5/2020 | TIME PLOTTED => 4:15:10 PM

Dist	COUNTY	ROUTE	SHEET No.	TOTAL SHEETS
05	SBt	PANOCHE ROAD		

65% SUBMITTAL XX/XX/XX
REGISTERED CIVIL ENGINEER DATE

PLANS APPROVAL DATE

REGISTERED PROFESSIONAL ENGINEER Scott McCauley No. 71495 Exp. 12/31/19 CIVIL STATE OF CALIFORNIA

THE STATE OF CALIFORNIA OR ITS OFFICERS OR AGENTS SHALL NOT BE RESPONSIBLE FOR THE ACCURACY OR COMPLETENESS OF SCANNED COPIES OF THIS PLAN SHEET.

QUINCY ENGINEERING
11017 Cobblerock Drive
Suite 100
Rancho Cordova, CA 95670

San Benito County - Public Works Department
2301 Technology Parkway
Hollister, CA 95023

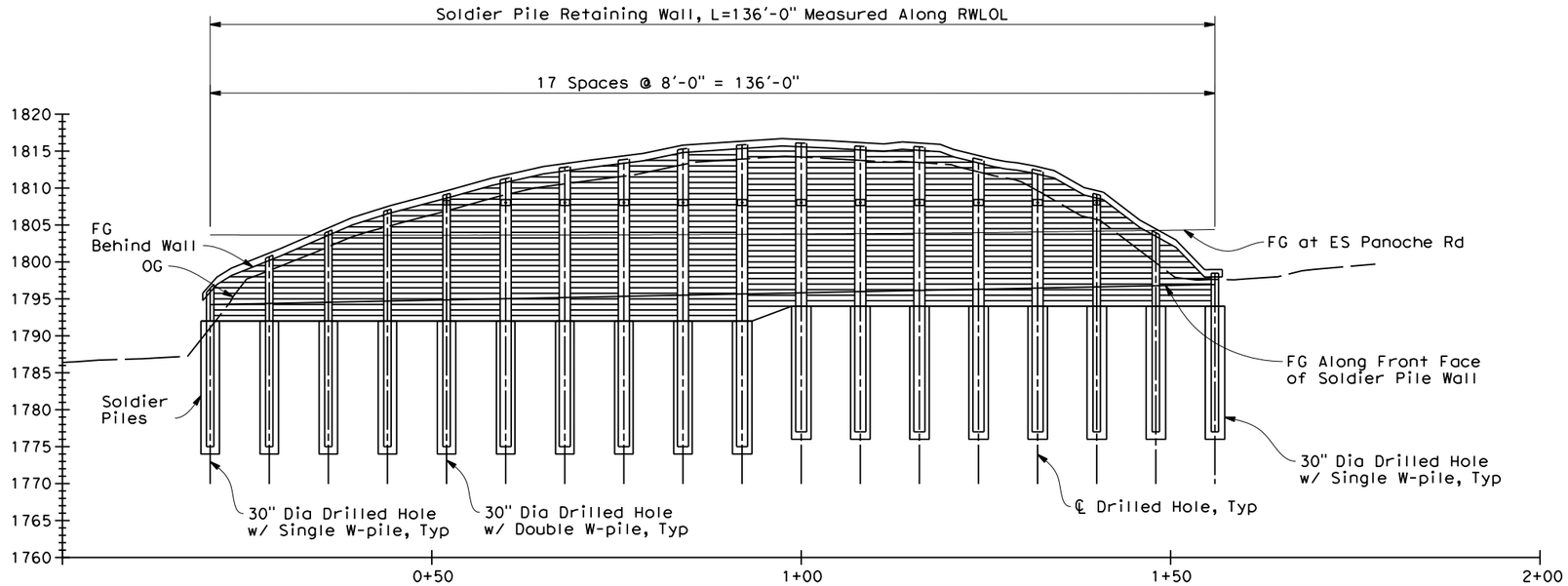

DEVELOPED ELEVATION

1"=10'

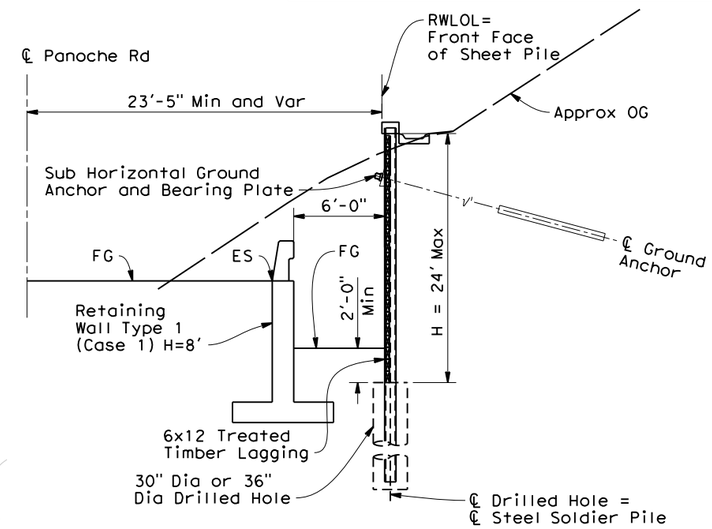

TYPICAL SECTION

3/8"=1'-0"

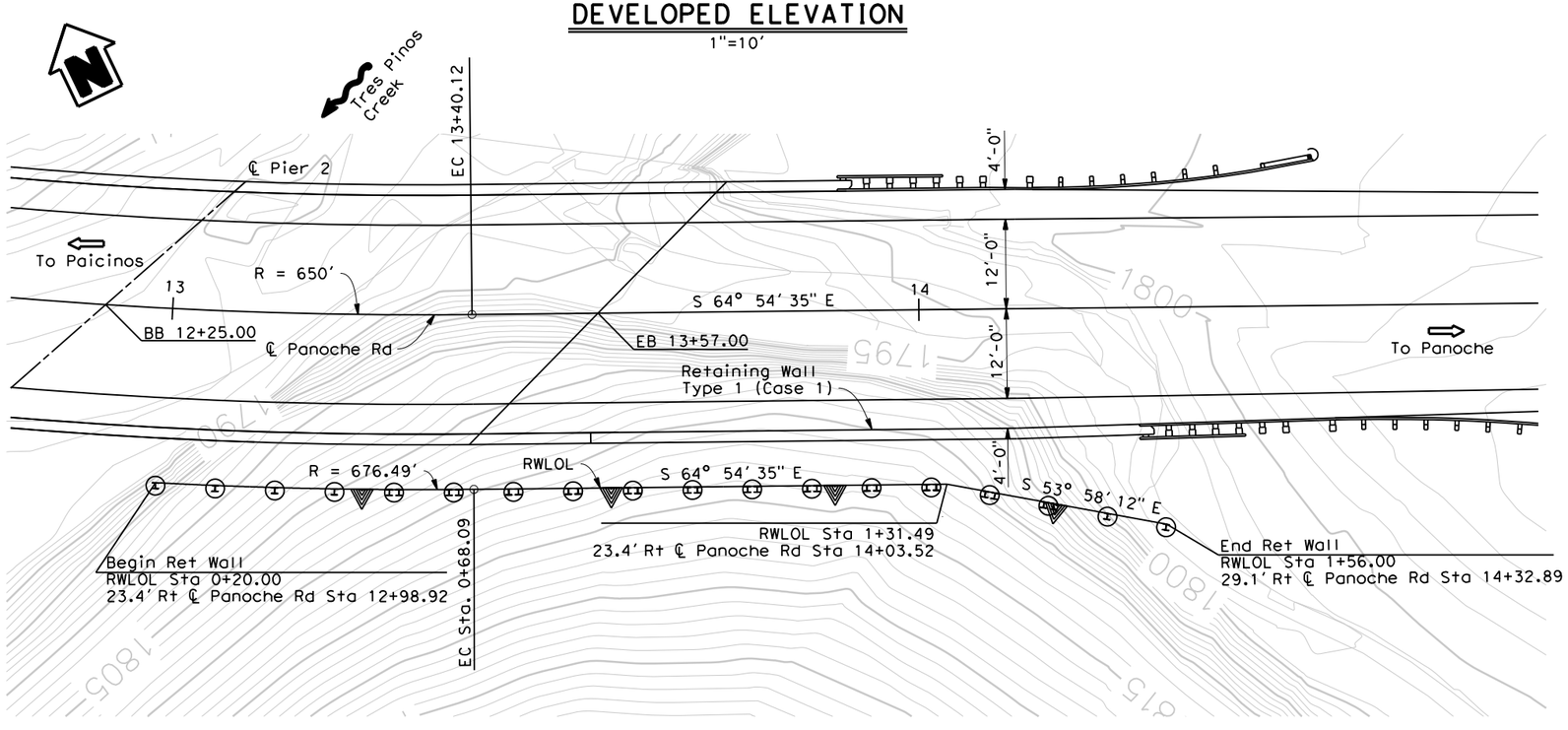

PLAN

1"=10'

RETAINING WALL PLAN

SCALE AS SHOWN

RW-1

REVISED BY	DATE REVISED

SCOTT McCAULEY

CALCULATED-DESIGNED BY | CHECKED BY

PROJECT ENGINEER: SCOTT McCAULEY

SAN BENITO DEPARTMENT OF PUBLIC WORKS

PANOCHE ROAD BRIDGE REPLACEMENT

LAST REVISION 00-00-00 | DATE PLOTTED => 11/5/2020 | TIME PLOTTED => 4:15:16 PM

Dist	COUNTY	ROUTE	SHEET No.	TOTAL SHEETS
05	SBt	PANOCHE ROAD		33

PRELIMINARY PLANS
REGISTERED CIVIL ENGINEER 11/05/20 DATE

PLANS APPROVAL DATE

REGISTERED PROFESSIONAL ENGINEER Carolyn Davis No. C58440 Exp. 12/31/20 CIVIL STATE OF CALIFORNIA

THE STATE OF CALIFORNIA OR ITS OFFICERS OR AGENTS SHALL NOT BE RESPONSIBLE FOR THE ACCURACY OR COMPLETENESS OF SCANNED COPIES OF THIS PLAN SHEET.

QUINCY ENGINEERING
11017 Cobblerock Drive
Suite 100
Rancho Cordova, CA 95670

San Benito County - Public Works Department
2301 Technology Parkway
Hollister, CA 95023

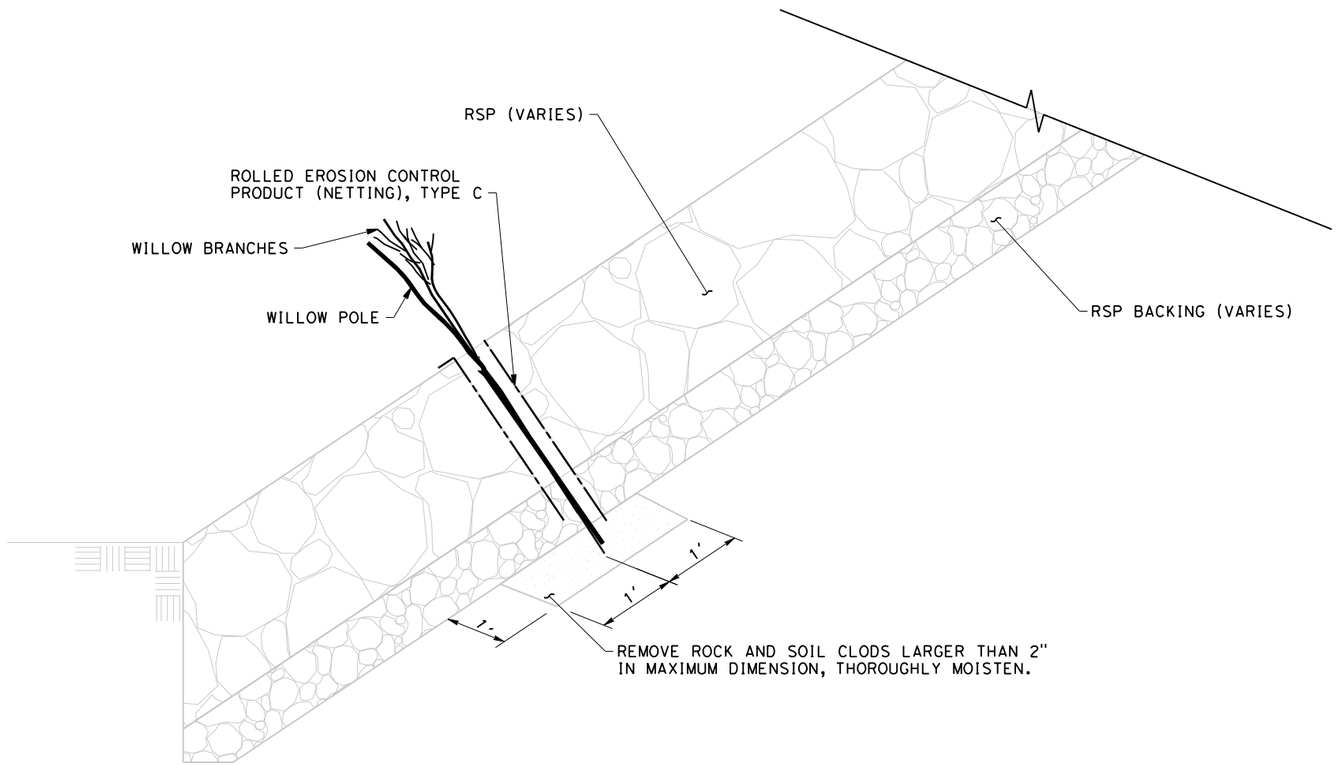

VEGETATED ROCK SLOPE PROTECTION

SECTION

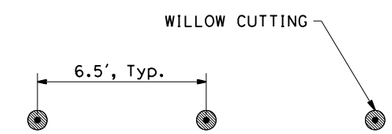

VEGETATED ROCK SLOPE PROTECTION SPACING

PLAN

EROSION CONTROL DETAILS

ECD-1

REVISED BY	DATE REVISED
ANDREW MITCHELL	01/22/13

CALCULATED-DESIGNED BY	CHECKED BY

PROJECT ENGINEER: CAROLYN DAVIS

SAN BENITO DEPARTMENT OF PUBLIC WORKS

PANOCHE ROAD BRIDGE REPLACEMENT

LAST REVISION 00-00-00 | DATE PLOTTED => 11/5/2020 | TIME PLOTTED => 4:15:19 PM

DIST	COUNTY	ROUTE	SHEET No	TOTAL SHEETS
05	SBt	PANOCHE ROAD	18	33

REGISTERED CIVIL ENGINEER — DATE 11/05/20

PRELIMINARY PLANS

PLANS APPROVAL DATE

The identity or its officers or agents shall not be responsible for the accuracy or completeness of electronic copies of this plan sheet.

REGISTERED PROFESSIONAL ENGINEER — Scott McCauley — No. 71495 — Exp. 12-31-21 — CIVIL — STATE OF CALIFORNIA

QUINCY ENGINEERING
11017 Cobblerock Dr #100
Rancho Cordova, CA 95670

San Benito County - Public Works Department
2301 Technology Parkway
Hollister, CA 95023

Legend:

1. Paint "Br No. 43C0070"
2. Paint "Panoche Road Bridge"
3. Rock Slope Protection, see "Road Plans"
4. Structure Approach Type EQ(10)
5. Stone weir not shown
6. MGS or Quadguard

Highwater elevation

Indicates existing structure

Notes:

1. For General Notes, Index to Plans, Quantities, Hydraulic Data, and Caltrans Standard Plans, see "General Notes" sheet.
2. For retaining wall details, see "Abutment Details No. 2" sheet.

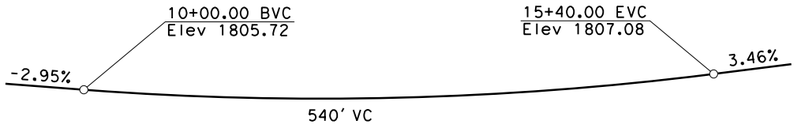

PROFILE GRADE

No Scale

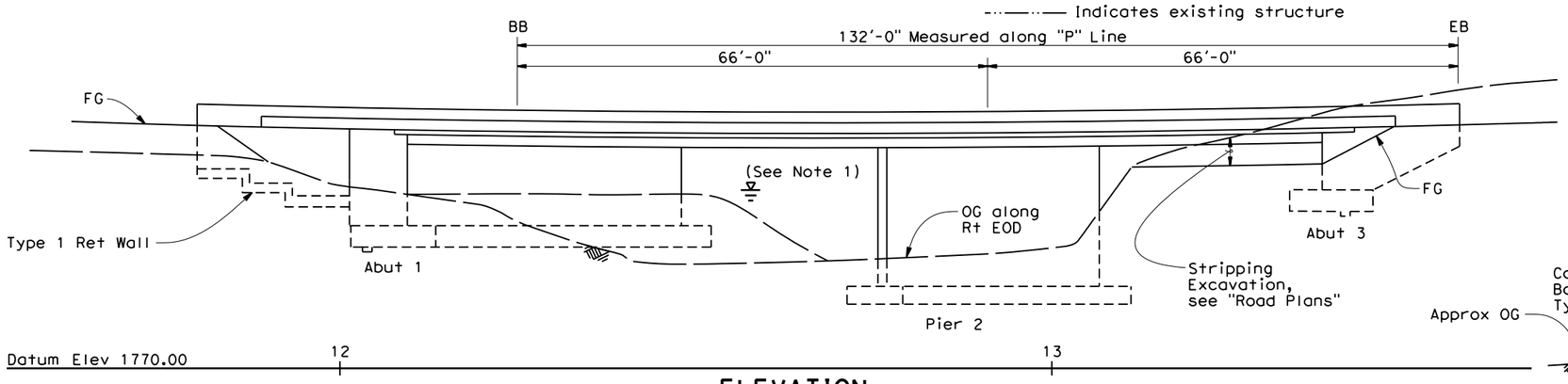

ELEVATION

1"=10'

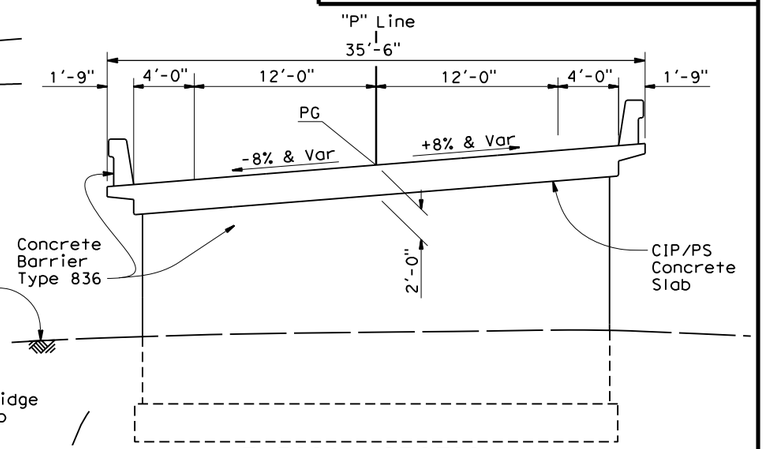

TYPICAL SECTION

1"=5'

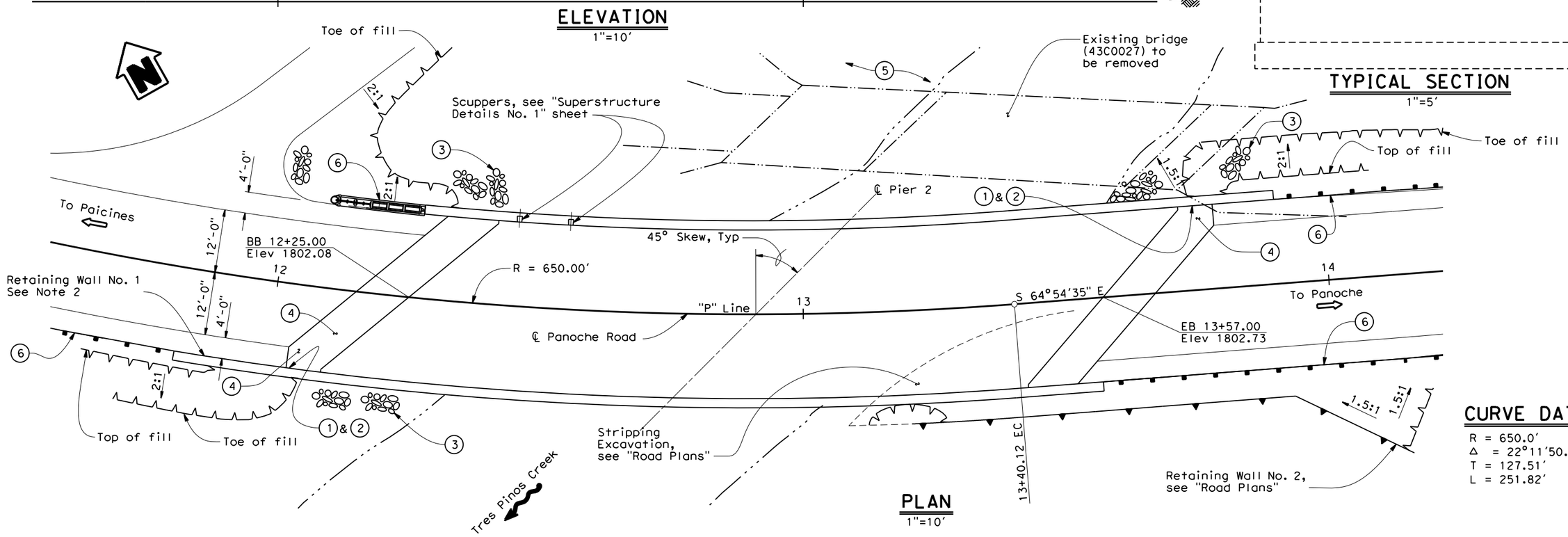

PLAN

1"=10'

CURVE DATA

R = 650.0'
Δ = 22°11'50.16"
T = 127.51'
L = 251.82'

X DESIGN OVERSIGHT	DESIGN	BY S. McCauley	CHECKED X	LOAD & RESISTANCE FACTOR DESIGN	LIVE LOADING: HL93 W/"LOW-BOY"; PERMIT DESIGN VEHICLE
X SIGN OFF DATE	DETAILS	BY B. Maechler	CHECKED X	LAYOUT	BY M. Quest/S. McCauley — CHECKED X
	QUANTITIES	BY X	CHECKED X	SPECIFICATIONS	BY X — PLANS AND SPECS COMPARED X

PREPARED FOR THE SAN BENITO COUNTY DEPARTMENT OF PUBLIC WORKS

PROJECT ENGINEER

BRIDGE NO. 43C0070 — POST MILES

PANOCHE RD BRIDGE (REPLACE)

GENERAL PLAN

DESIGN GENERAL PLAN SHEET (ENGLISH) (REV.7/16/10)

ORIGINAL SCALE IN INCHES FOR REDUCED PLANS 0 1 2 3

UNIT:
PROJECT NUMBER & PHASE:
CONTRACT NO.:

DISREGARD PRINTS BEARING EARLIER REVISION DATES

REVISION DATES 1/22/13

SHEET 1 OF 13

FILE => S:\Client\San Benito Cnty - S70\S70-300 Panoche Rd\CAD\bridge\S70300a-a-gp01.dgn

USERNAME => Andrew.Mi DATE PLOTTED => 11/5/2020 TIME PLOTTED => 3:53:47 PM

DIST	COUNTY	ROUTE	SHEET No	TOTAL SHEETS
05	SBt	PANOCHE ROAD	19	33

REGISTERED CIVIL ENGINEER — DATE 11/05/20

PRELIMINARY PLANS

PLANS APPROVAL DATE

REGISTERED PROFESSIONAL ENGINEER — Scott McCauley — No. 71495 — Exp. 12-31-21 — CIVIL — STATE OF CALIFORNIA

The identity or its officers or agents shall not be responsible for the accuracy or completeness of electronic copies of this plan sheet.

QUINCY ENGINEERING
11017 Cobblerock Dr #100
Rancho Cordova, CA 95670

San Benito County - Public Works Department
2301 Technology Parkway
Hollister, CA 95023

GENERAL NOTES
LOAD AND RESISTANCE FACTOR DESIGN

DESIGN: AASHTO LRFD Bridge Design Specifications 6th edition with Caltrans Amendments

SEISMIC DESIGN: Caltrans Seismic Design Criteria (SDC), Version 1.7 dated April 2013.

DEAD LOAD: Includes 35 psf for future wearing surface.

LIVE LOADING: HL93 and permit design load.

SEISMIC LOADING:
Soil Profile V_{S30} = 560 m/s
Moment Magnitude Mmax = 7.9
Peak Ground Acceleration = 0.48 g

CONCRETE:
f_y = 60 ksi
f'_c = 3.6 ksi
n = 8
See Prestressing Notes

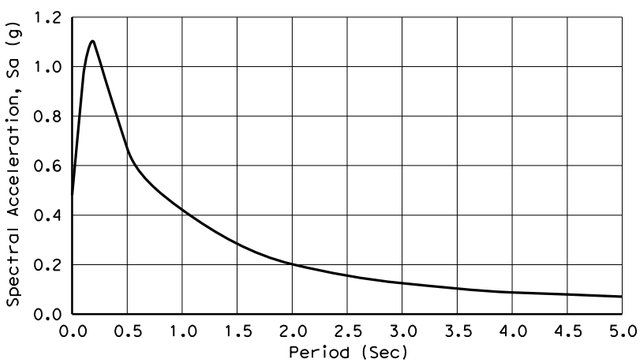

ACCELERATION RESPONSE SPECTRA CURVE
No Scale

INDEX TO PLANS

Sheet No.	Title
1	General Plan
2	General Notes
3	Deck Contours
4	Foundation Plan
5	Abutment 1 Layout
6	Abutment 3 Layout
7	Abutment Details No. 1
8	Abutment Details No. 2
9	Pier Details
10	Typical Section
11	Superstructure Details No. 1
12	Superstructure Details No. 2
13	Log of Test Borings

STANDARD PLANS DATED 2018

	A3A	Abbreviations (Sheet 1 of 3)
	A3B	Abbreviations (Sheet 2 of 3)
	A3C	Abbreviations (Sheet 3 of 3)
	A10A	Legend - Lines and Symbols (Sheet 1 of 5)
	A10B	Legend - Lines and Symbols (Sheet 2 of 5)
	A10C	Legend - Lines and Symbols (Sheet 3 of 5)
	A10D	Legend - Lines and Symbols (Sheet 4 of 5)
	A10E	Legend - Lines and Symbols (Sheet 5 of 5)
	A10F	Legend - Soil (Sheet 1 of 2)
	A10H	Legend - Rock
	A62C	Limits of Payment for Excavation and Backfill - Bridge
RSP	B0-1	Bridge Details
	B0-3	Bridge Details
	B0-5	Bridge Details
	B0-13	Bridge Details
RSP	B3-1A	Retaining Wall Type 1 (Case 1)
	B3-5	Retaining Wall Details No. 1
	B6-21	Joint Seals (Maximum Movement Rating = 2")
	B7-5	Deck Drains
	B7-8	Deck Drainage Details
	B8-5	Cast-in-Place Post-Tensioned Girder Details
	B9-4	Structure Approach - Type EQ (10)
	B9-5	Structure Approach - Slab Details
	B9-6	Structure Approach - Drainage Details
RSP	B11-79	Concrete Barrier Type 836 Details No. 1
RSP	B11-80	Concrete Barrier Type 836 Details No. 2

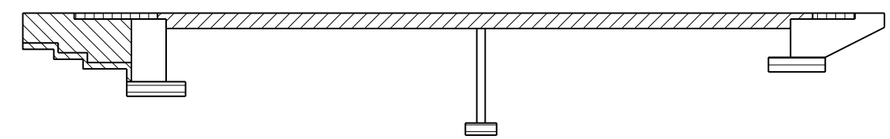

- Structural Concrete, Bridge
- Structural Concrete, Bridge Footing
- Structural Concrete, Approach Slab (Type EQ)
- Structural Concrete, Bridge (Polymer Fiber) (f'c = 5.0 ksi at 28 days)
- Structural Concrete, Retaining Wall

CONCRETE STRENGTH AND TYPE LIMITS
No Scale

Standard Plan Sheet No.
Detail No.

RSP — Revised Standard Plan Sheet No.
Detail No.

HYDROLOGIC SUMMARY

Drainage area: 30.5 Square Miles

	Design Flood	Base Flood
Frequency (years)	50	100
Discharge (cubic feet per second)	2910	4020
Water Surface Elev at Bridge (ft)	1793.6	1795

Flood plain data based upon information available when the plans were prepared and are shown to meet Federal requirments.The accuracy of said information is not warranted by the County and interested or affected parties should made their own investigations.

X — DESIGN OVERSIGHT
X — SIGN OFF DATE

	BY	CHECKED
DESIGN	S. McCauley	X
DETAILS	B. Maechler	X
QUANTITIES	X	X

PREPARED FOR THE SAN BENITO COUNTY DEPARTMENT OF PUBLIC WORKS

PROJECT ENGINEER

BRIDGE NO. 43C0070
POST MILE

PANOCHE RD BRIDGE (REPLACE)
GENERAL NOTES

DESIGN DETAIL SHEET (ENGLISH) (REV.7/16/10)

ORIGINAL SCALE IN INCHES FOR REDUCED PLANS 0 1 2 3

UNIT:
PROJECT NUMBER & PHASE:
CONTRACT NO.:

DISREGARD PRINTS BEARING EARLIER REVISION DATES 1/22/13

REVISION DATES | SHEET 2 OF 13

FILE => S:\Client\San Benito Cnty - S70\S70-300 Panoche Rd\CAD\bridge\S70300a-b-gnote01.dgn

USERNAME => Andrew.Mifsud@ | DATE/TIME PLOTTED => 11/5/2020 | TIME PLOTTED => 3:53:55 PM

DIST	COUNTY	ROUTE	SHEET No	TOTAL SHEETS
05	SBt	PANOCHE ROAD	20	33

REGISTERED CIVIL ENGINEER — DATE 11/05/20

PRELIMINARY PLANS

PLANS APPROVAL DATE

The identity or its officers or agents shall not be responsible for the accuracy or completeness of electronic copies of this plan sheet.

REGISTERED PROFESSIONAL ENGINEER — Scott McCauley — No. 71495 — Exp. 12-31-21 — CIVIL — STATE OF CALIFORNIA

QUINCY ENGINEERING
11017 Cobblerock Dr #100
Rancho Cordova, CA 95670

San Benito County - Public Works Department
2301 Technology Parkway
Hollister, CA 95023

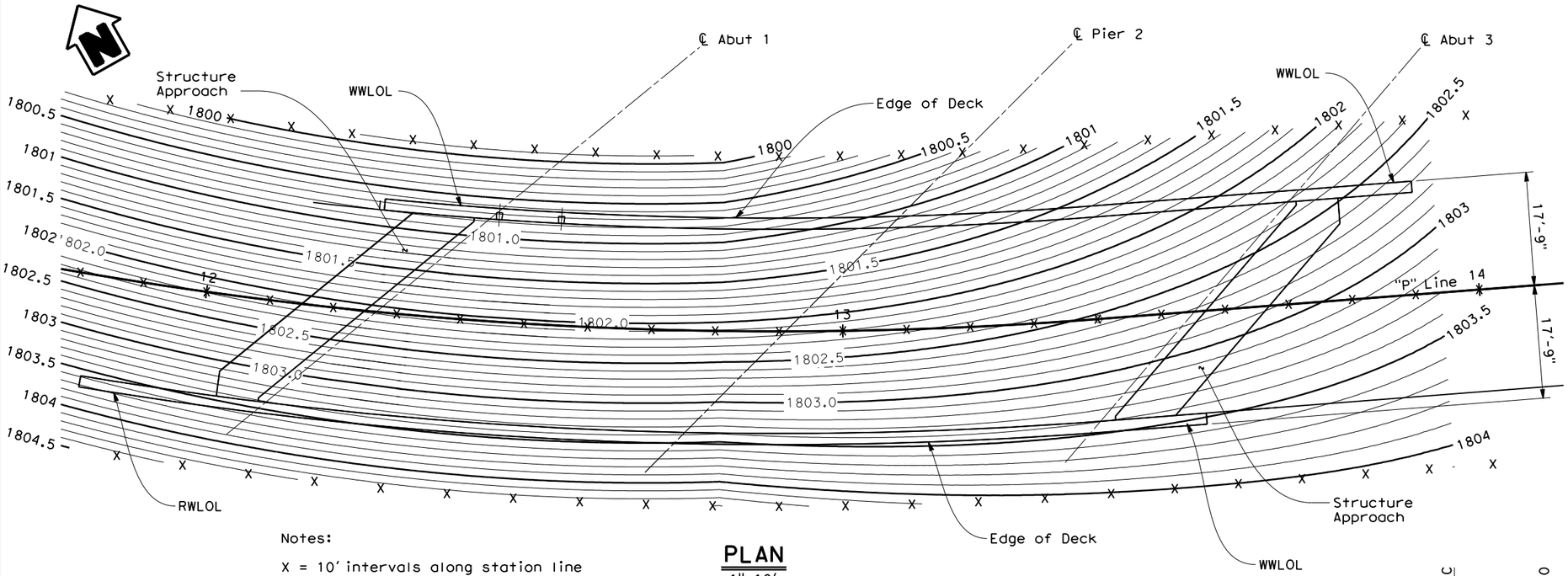

Notes:

X = 10' intervals along station line

Contours Intervals = 0.10'

Contours do not include camber

PLAN
1"=10'

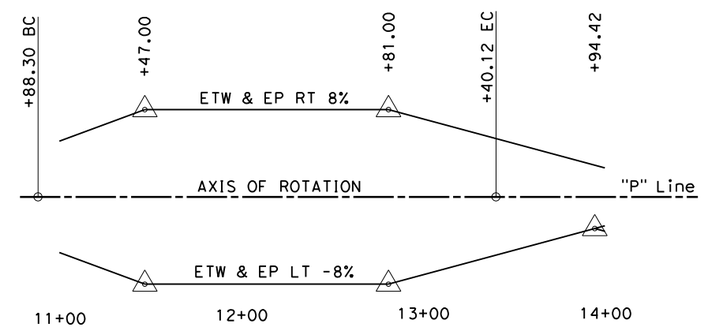

"P" LINE SUPERELEVATION
No Scale

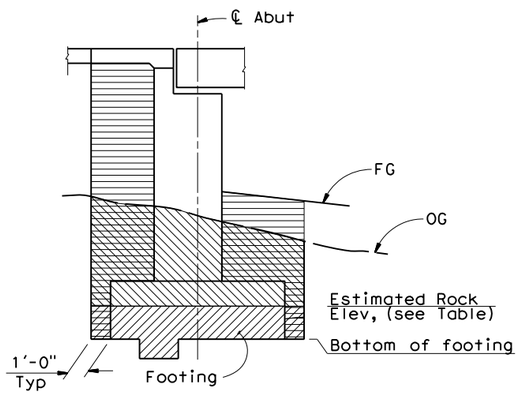

Estimated Rock Elevations

LOCATION	ELEVATION
Abut 1	1785.0
Pier 2	1781.0
Abut 3 Lower	1789.0
Abut 3 Upper	1797.0

ABUT TYPICAL SECTION

Note:
Abutment 3 Lower shown, Abutment 1 & Pier 2 similar

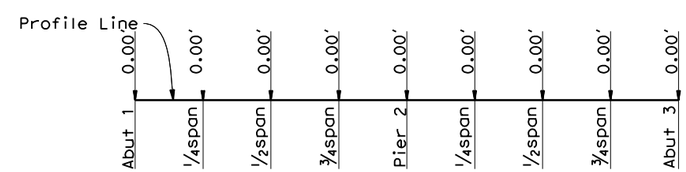

Note: Does not include allowance for falsework settlement

CAMBER DIAGRAM
No Scale

LIMITS OF PAYMENT FOR EXCAVATION AND BACKFILL
No Scale

- Indicates Structure Excavation (Bridge)
- Indicates Structure Excavation (Rock)
- Indicates Structure Backfill (Bridge)

DESIGN	BY S. McCauley	CHECKED X	
DETAILS	BY B. Maechler	CHECKED X	
QUANTITIES	BY X	CHECKED X	

X — DESIGN OVERSIGHT
X — SIGN OFF DATE

PREPARED FOR THE SAN BENITO COUNTY DEPARTMENT OF PUBLIC WORKS

PROJECT ENGINEER

BRIDGE NO. 43C0070
POST MILE

PANOCHE RD BRIDGE (REPLACE)
DECK CONTOURS

DESIGN DETAIL SHEET (ENGLISH) (REV.7/16/10)

ORIGINAL SCALE IN INCHES FOR REDUCED PLANS 0 1 2 3

UNIT:
PROJECT NUMBER & PHASE:
CONTRACT NO.:

DISREGARD PRINTS BEARING EARLIER REVISION DATES 1/22/13

REVISION DATES | SHEET 3 | OF 13

FILE => S:\Client\San Benito Cnty - S70\S70-300 Panoche Rd\CAD\bridge\S70300a-d-dc01.dgn

USERNAME => Andrew.Mi DATE/TIME PLOTTED => 11/5/2020 TIME PLOTTED => 3:54:04 PM

DIST	COUNTY	ROUTE	SHEET No	TOTAL SHEETS
05	SBt	PANOCHE ROAD	21	33

REGISTERED CIVIL ENGINEER — DATE 11/05/20

PRELIMINARY PLANS

PLANS APPROVAL DATE

REGISTERED PROFESSIONAL ENGINEER — Scott McCauley — No. 71495 — Exp. 12-31-21 — CIVIL — STATE OF CALIFORNIA

The identity or its officers or agents shall not be responsible for the accuracy or completeness of electronic copies of this plan sheet.

QUINCY ENGINEERING 11017 Cobblerock Dr #100 Rancho Cordova, CA 95670

San Benito County - Public Works Department
2301 Technology Parkway
Hollister, CA 95023

SURVEY CONTROL DATA

No.	NORTHING	EASTING	ELEVATION	DESCRIPTION
8	2128045.6730	5955306.6360	1796.5520	PK Nail/Tin
13	2128037.2990	5955273.2400	1797.0130	60D Nail CP
14	2128034.0090	5955179.0560	1800.4530	60D Nail CP

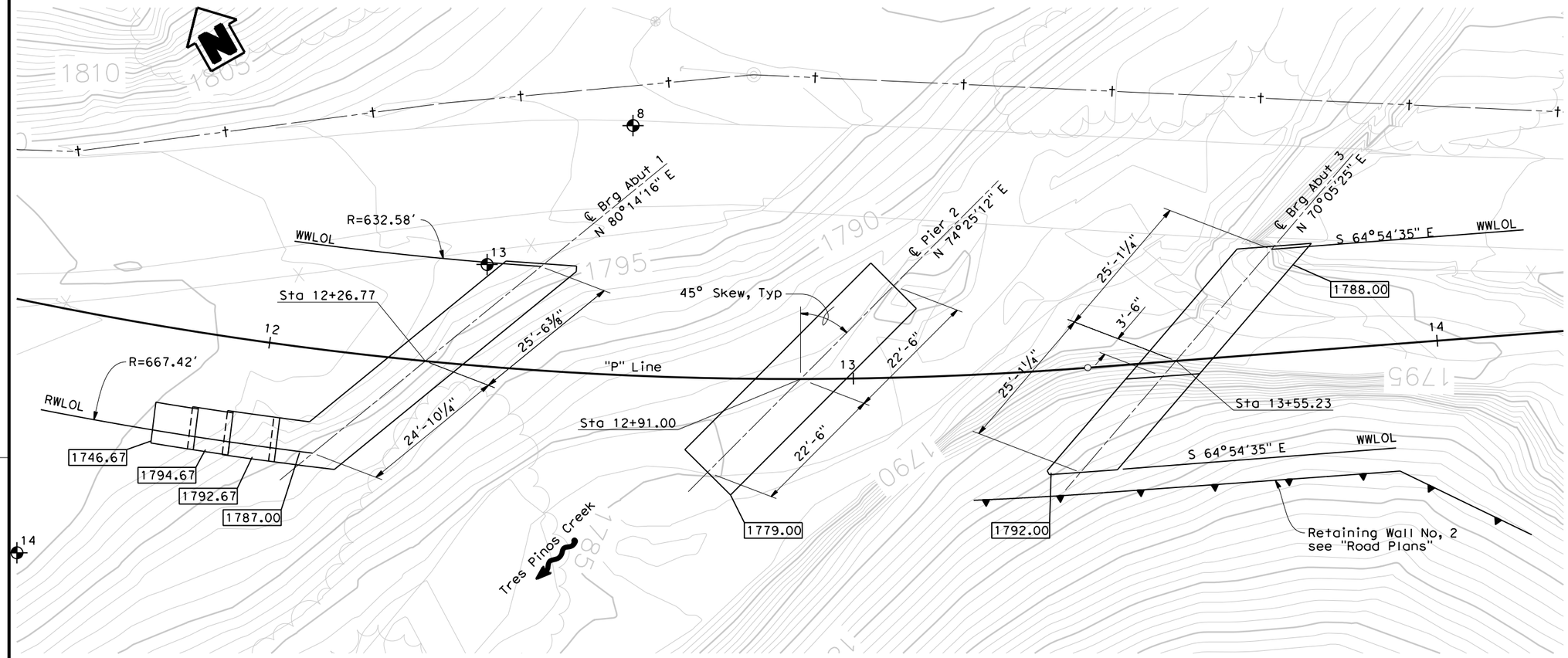

PLAN

1"=10'

SPREAD FOOTING DATA TABLE

LOCATION	LOAD AND RESISTANCE FACTOR DESIGN (LRFD)		
	SERVICE PERMISSIBLE NET CONTACT STRESS (SETTLEMENT) (ksf)	**STRENGTH** FACTORED GROSS NOMINAL BEARING RESISTANCE (φ_b=0.45) (ksf)	**EXTREME EVENT** FACTORED GROSS NOMINAL BEARING RESISTANCE (φ_b=1.00) (ksf)
Abut 1	N/A	N/A	N/A
Pier 2	10	13.5	30
Abut 3	N/A	N/A	N/A

Legend:

XXX.XX — Indicates bottom of footing elevation

Indicates survey control data point

X GEOTECHNICAL PROFESSIONAL APPROVAL DATE

X DESIGN OVERSIGHT

X SIGN OFF DATE

SCALE: X	VERT.DATUM X	HORZ.DATUM X	
PHOTOGRAMMETRY AS OF: X		ALIGNMENT TIES X	
SURVEYED	BY X	DRAFTED	BY X
FIELD CHECKED	BY X	CHECKED	BY X

	BY	CHECKED
DESIGN	S. McCauley	X
DETAILS	B. Maechler	X
QUANTITIES	X	X

PREPARED FOR THE SAN BENITO COUNTY DEPARTMENT OF PUBLIC WORKS

PROJECT ENGINEER

BRIDGE NO. 43C0070

POST MILE

PANOCHE RD BRIDGE (REPLACE)

FOUNDATION PLAN

FOUNDATION PLAN SHEET (ENGLISH) (REV.7/16/10)

ORIGINAL SCALE IN INCHES FOR REDUCED PLANS 0 1 2 3

UNIT:
PROJECT NUMBER & PHASE:

CONTRACT NO.:

DISREGARD PRINTS BEARING EARLIER REVISION DATES

REVISION DATES 1/22/13

SHEET 4 OF 13

FILE => S:\Client\San Benito Cnty - S70\S70-300 Panoche Rd\CAD\bridge\S70300a-e-fp101.dgn

USERNAME => Andrew.Mifsud@ PLOTTED => 11/5/2020 TIME PLOTTED => 3:54:22 PM

DIST	COUNTY	ROUTE	SHEET No	TOTAL SHEETS
05	SBt	PANOCHE ROAD	22	33

REGISTERED CIVIL ENGINEER — DATE 11/05/20

PRELIMINARY PLANS

PLANS APPROVAL DATE

The identity or its officers or agents shall not be responsible for the accuracy or completeness of electronic copies of this plan sheet.

REGISTERED PROFESSIONAL ENGINEER — Scott McCauley — No. 71495 — Exp. 12-31-21 — CIVIL — STATE OF CALIFORNIA

QUINCY ENGINEERING
11017 Cobblerock Dr #100
Rancho Cordova, CA 95670

San Benito County - Public Works Department
2301 Technology Parkway
Hollister, CA 95023

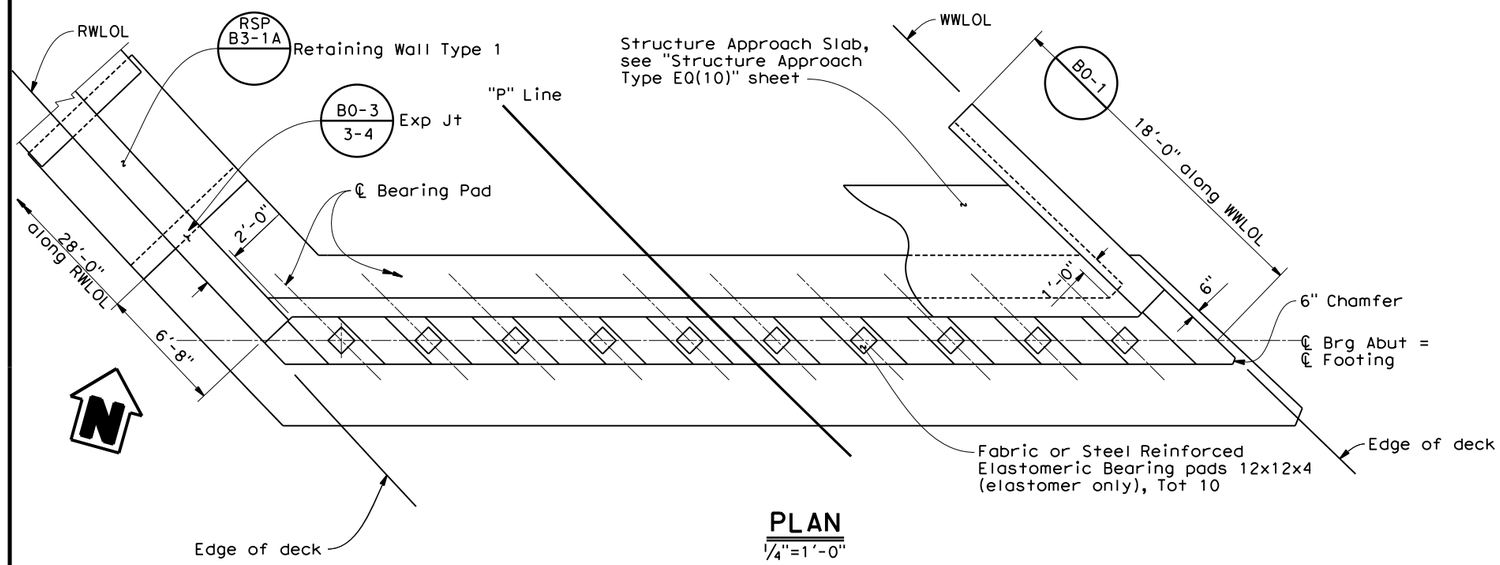

PLAN
1/4"=1'-0"

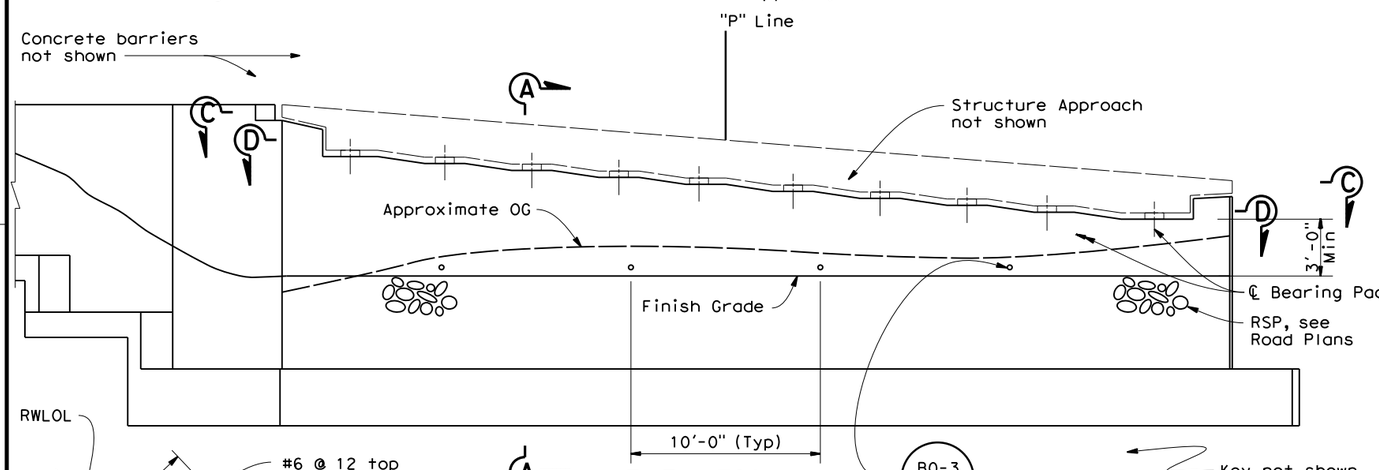

ELEVATION
1/4"=1'-0"

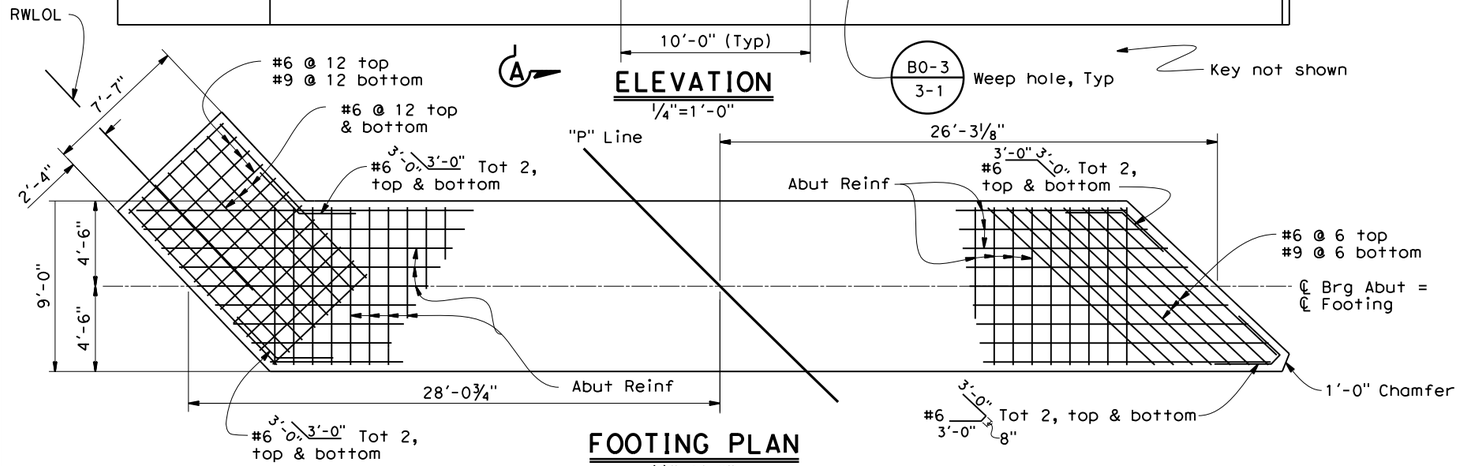

FOOTING PLAN
1/4"=1'-0"

Notes:

1. For sections and details not shown, see "Abutment 2 Layout", "Abutment Details No. 1" and "Abutment Details No. 2" sheets.

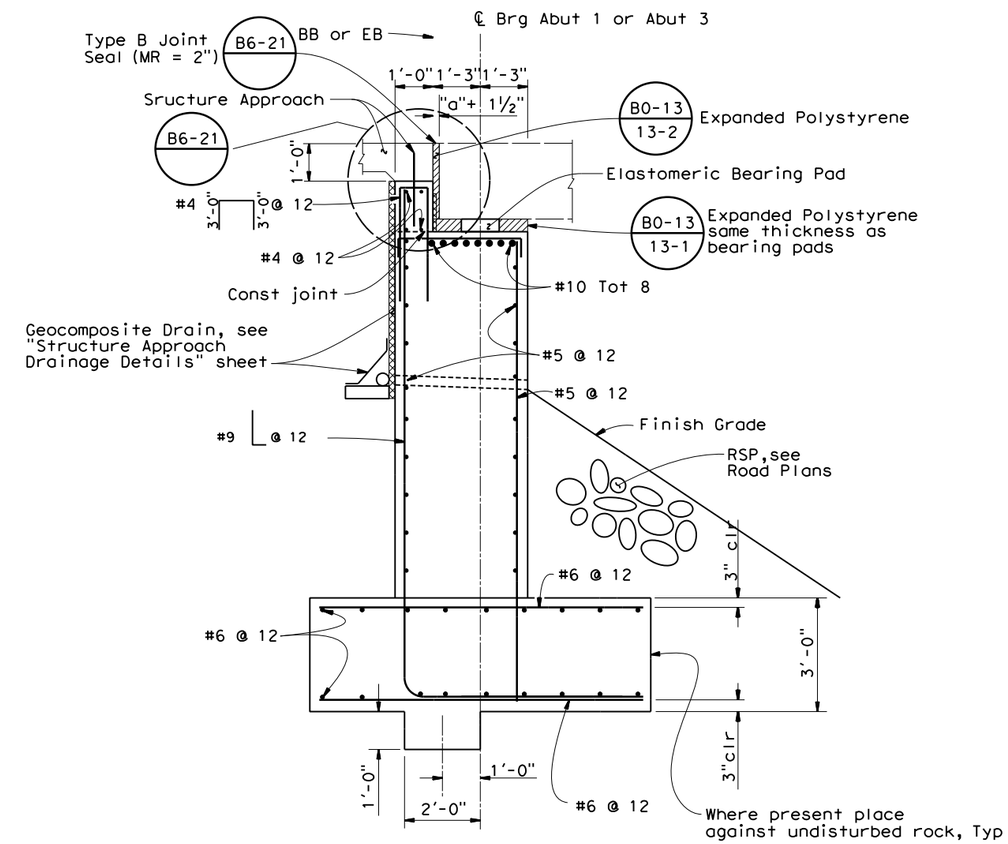

Note: Abutment 1 shown, Abutment 3 similar

SECTION A-A
1/2"=1'-0"

DESIGN	BY S. McCauley	CHECKED X	
DETAILS	BY B. Maechler	CHECKED X	
QUANTITIES	BY X	CHECKED X	

X — DESIGN OVERSIGHT
X — SIGN OFF DATE

DESIGN DETAIL SHEET (ENGLISH) (REV.7/16/10)

PREPARED FOR THE SAN BENITO COUNTY DEPARTMENT OF PUBLIC WORKS

PROJECT ENGINEER

BRIDGE NO. 43C0070
POST MILE

PANOCHE RD BRIDGE (REPLACE)
ABUTMENT 1 LAYOUT

ORIGINAL SCALE IN INCHES FOR REDUCED PLANS 0 1 2 3

UNIT:
PROJECT NUMBER & PHASE:
CONTRACT NO.:

DISREGARD PRINTS BEARING EARLIER REVISION DATES

REVISION DATES 1/22/13

SHEET 5 OF 13

FILE => S:\Client\San Benito Cnty - S70\S70-300 Panoche Rd\CAD\bridge\S70300a-f-a01_lo1.dgn

USERNAME => Andrew.Mitchell
DATE PLOTTED => 11/5/2020
TIME PLOTTED => 3:57:00 PM

DIST	COUNTY	ROUTE	SHEET No	TOTAL SHEETS
05	SBt	PANOCHE ROAD	23	33

REGISTERED CIVIL ENGINEER — DATE 11/05/20

PRELIMINARY PLANS

PLANS APPROVAL DATE

The identity or its officers or agents shall not be responsible for the accuracy or completeness of electronic copies of this plan sheet.

REGISTERED PROFESSIONAL ENGINEER — Scott McCauley — No. 71495 — Exp. 12-31-21 — CIVIL — STATE OF CALIFORNIA

QUINCY ENGINEERING
11017 Cobblerock Dr #100
Rancho Cordova, CA 95670

San Benito County - Public Works Department
2301 Technology Parkway
Hollister, CA 95023

Notes:

1. For sections and details not shown, see "Abutment 1 Layout", "Abutment Details No. 1" and "Abutment Details No. 2" sheets.

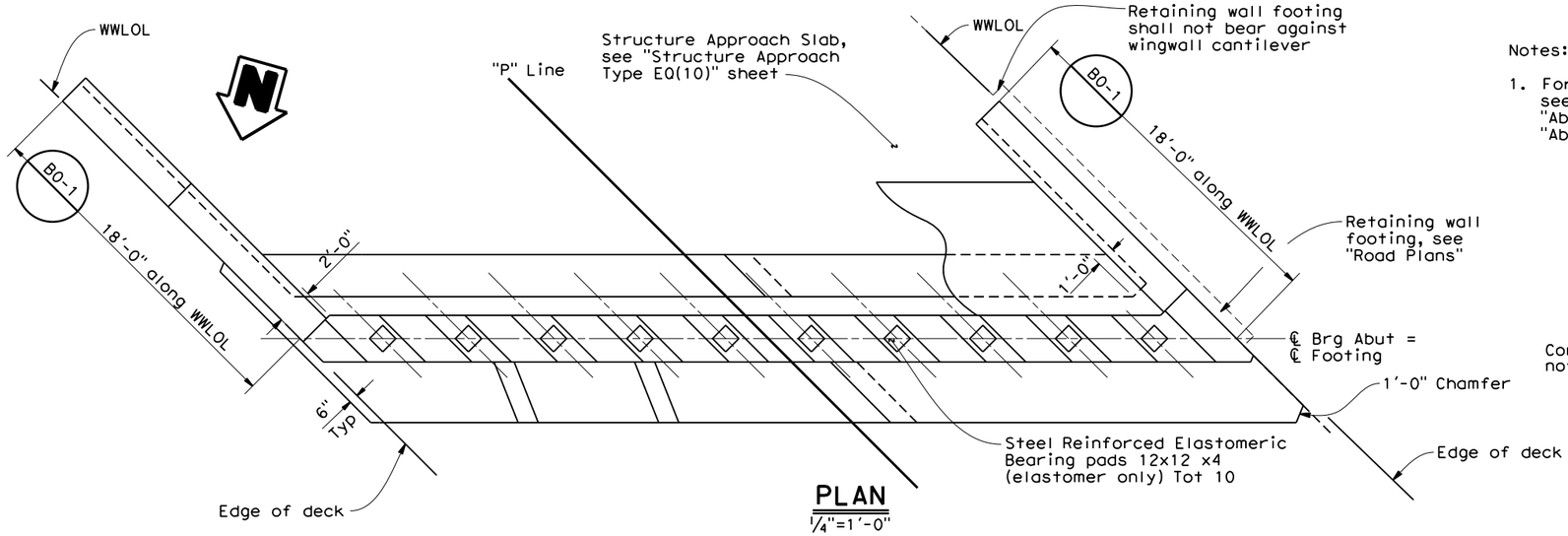

PLAN
1/4"=1'-0"

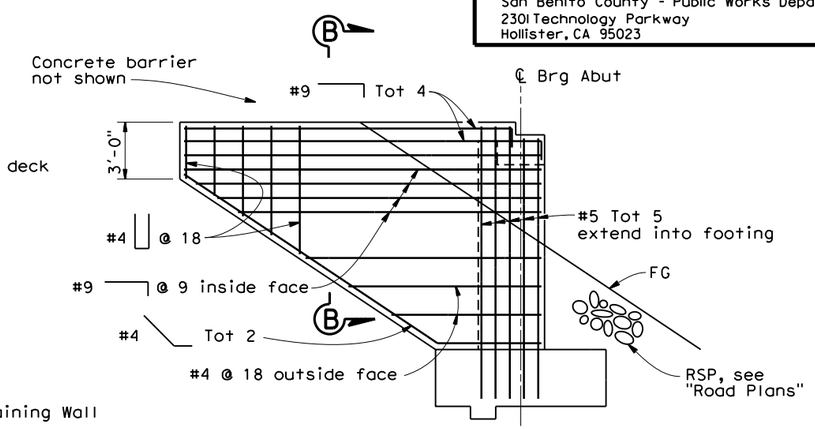

TYPICAL WINGWALL ELEVATION
No Scale

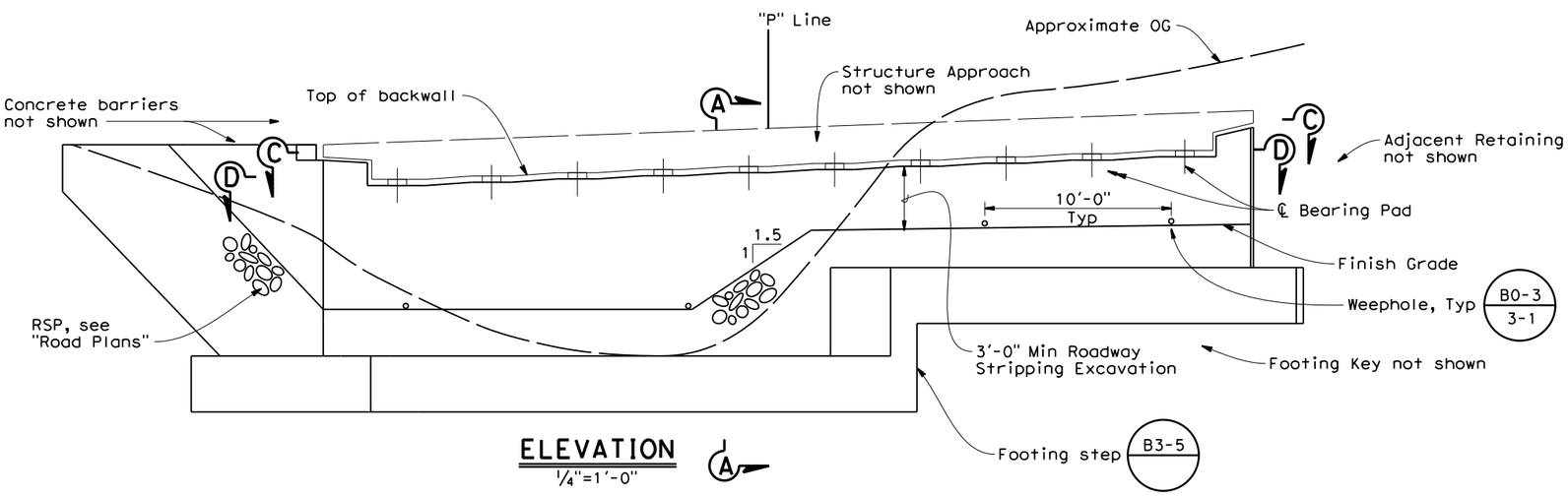

ELEVATION
1/4"=1'-0"

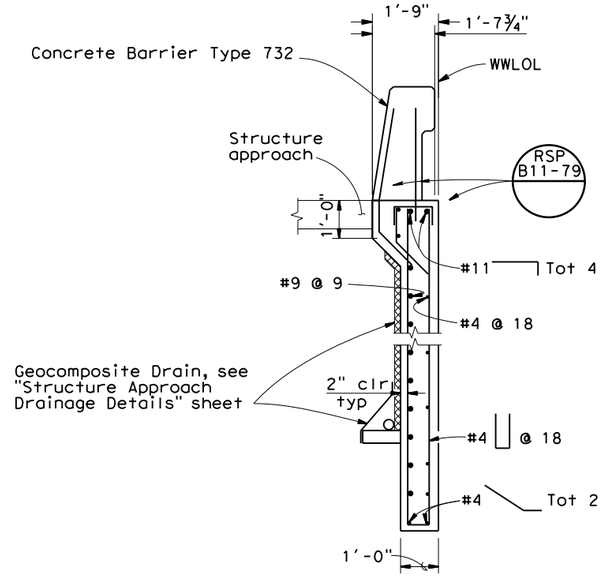

SECTION B-B
1/2"=1'-0"

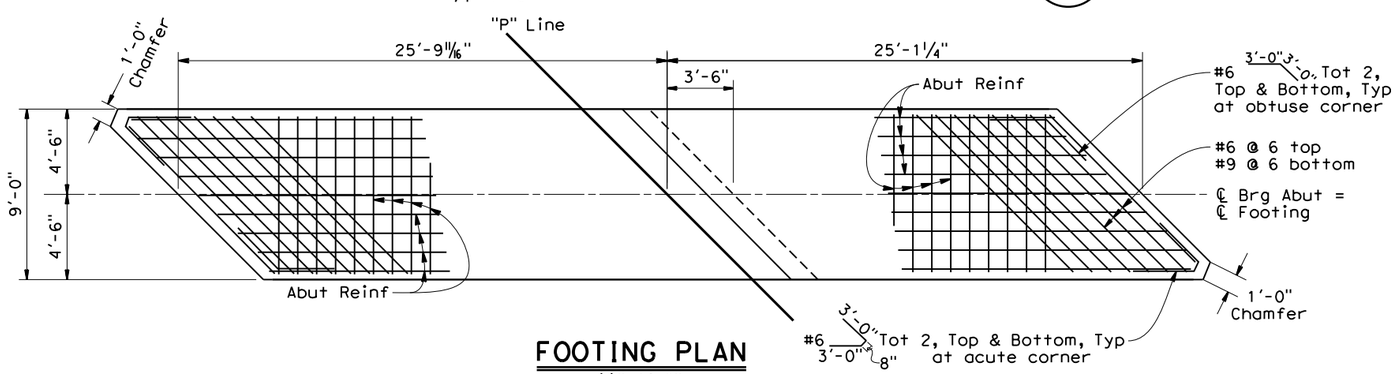

FOOTING PLAN
1/4"=1'-0"

DESIGN	BY S. McCauley	CHECKED X	
DETAILS	BY B. Maechler	CHECKED X	
QUANTITIES	BY X	CHECKED X	

X — DESIGN OVERSIGHT
X — SIGN OFF DATE

PREPARED FOR THE SAN BENITO COUNTY DEPARTMENT OF PUBLIC WORKS

PROJECT ENGINEER

BRIDGE NO. 43C0070
POST MILE

PANOCHE RD BRIDGE (REPLACE)

ABUTMENT 3 LAYOUT

DESIGN DETAIL SHEET (ENGLISH) (REV.7/16/10)

ORIGINAL SCALE IN INCHES FOR REDUCED PLANS 0 1 2 3

UNIT:
PROJECT NUMBER & PHASE:
CONTRACT NO.:

DISREGARD PRINTS BEARING EARLIER REVISION DATES

REVISION DATES 1/22/13

SHEET 6 OF 13

FILE => S:\Client\San Benito Cnty - S70\S70-300 Panoche Rd\CAD\bridge\S70300a-f-a01_1o2.dgn

USERNAME => Andrew.Mitchell TIME PLOTTED => 3:54:31 PM DATE PLOTTED => 11/5/2020

DIST	COUNTY	ROUTE	SHEET No	TOTAL SHEETS
05	SBt	PANOCHE ROAD	24	33

REGISTERED CIVIL ENGINEER 11/05/20 DATE

PRELIMINARY PLANS

PLANS APPROVAL DATE

The identity or its officers or agents shall not be responsible for the accuracy or completeness of electronic copies of this plan sheet.

REGISTERED PROFESSIONAL ENGINEER Scott McCauley No. 71495 Exp. 12-31-21 CIVIL STATE OF CALIFORNIA

QUINCY ENGINEERING 11017 Cobblerock Dr #100 Rancho Cordova, CA 95670

San Benito County - Public Works Department
2301 Technology Parkway
Hollister, CA 95023

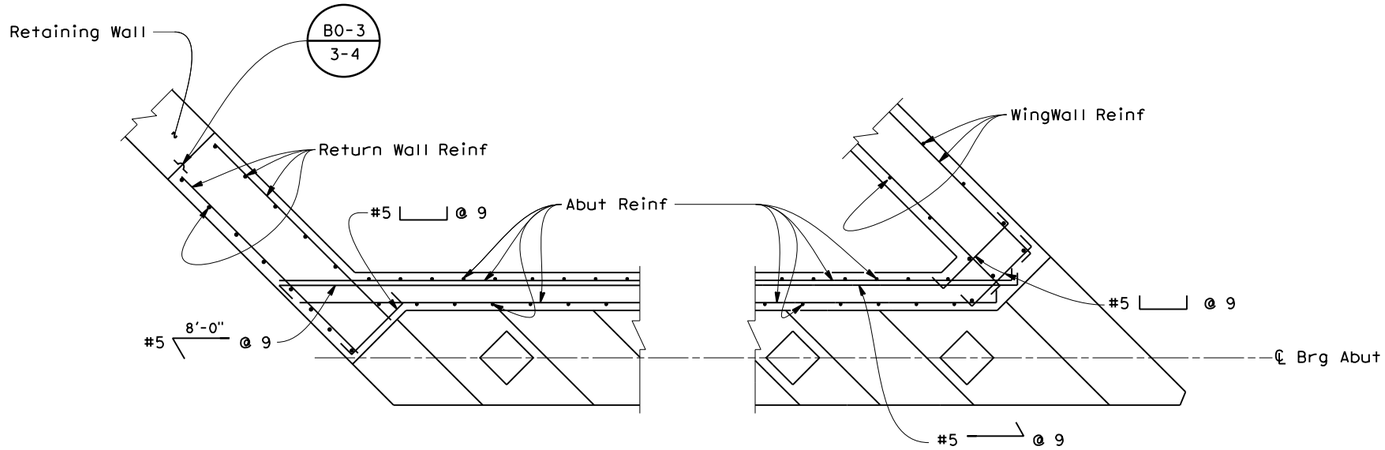

Note: Abut 1 shown, Abut 3 similar

SECTION C-C

½"=1'-0"

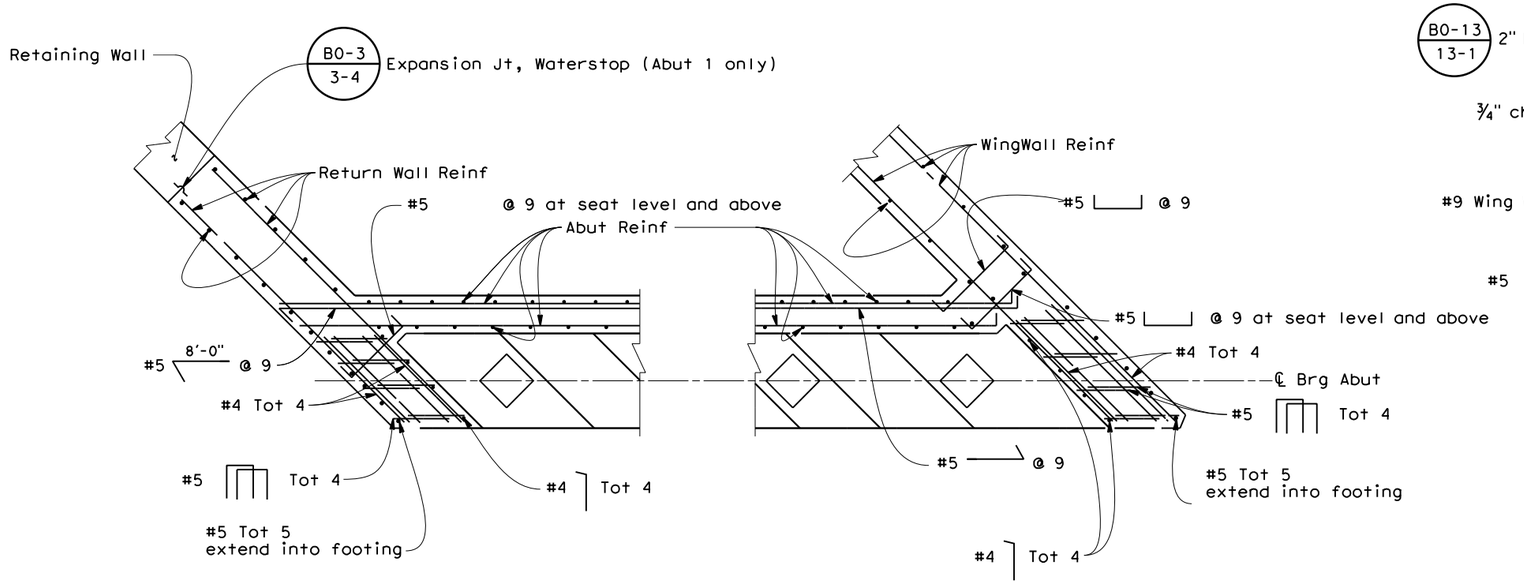

SECTION D-D

½"=1'-0"

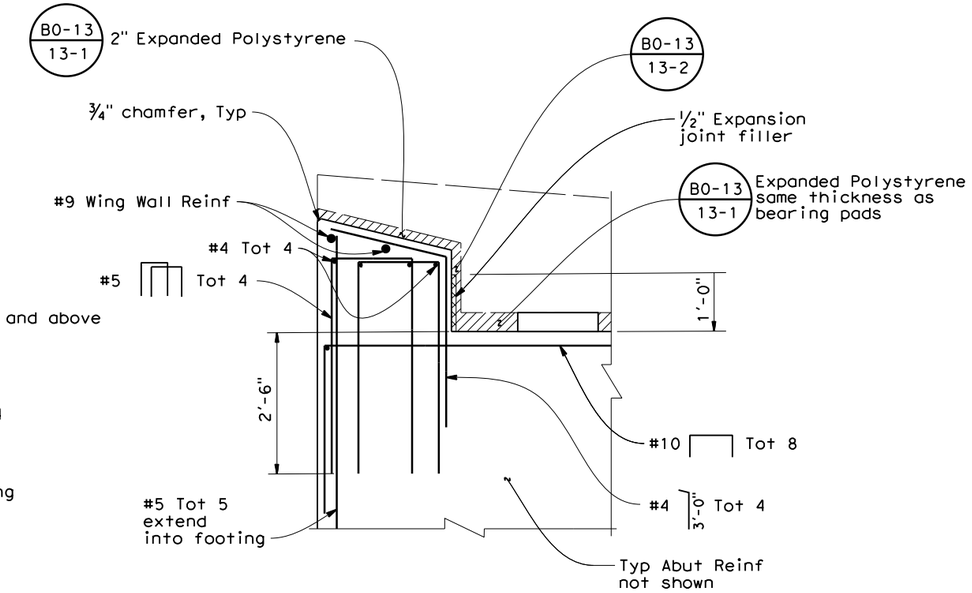

SHEAR KEY ELEVATION

¾"=1'-0"

X DESIGN OVERSIGHT	DESIGN	BY S. McCauley	CHECKED X	PREPARED FOR THE SAN BENITO COUNTY DEPARTMENT OF PUBLIC WORKS
X SIGN OFF DATE	DETAILS	BY B. Maechler	CHECKED X	
	QUANTITIES	BY X	CHECKED X	

PROJECT ENGINEER

BRIDGE NO. 43C0070

POST MILE

PANOCHE RD BRIDGE (REPLACE)

ABUTMENT DETAILS NO.1

DESIGN DETAIL SHEET (ENGLISH) (REV.7/16/10)

ORIGINAL SCALE IN INCHES FOR REDUCED PLANS 0 1 2 3

UNIT:
PROJECT NUMBER & PHASE:
CONTRACT NO.:

DISREGARD PRINTS BEARING EARLIER REVISION DATES 1/22/13

REVISION DATES

SHEET 7 OF 13

FILE => S:\Client\San Benito Cnty - S70\S70-300 Panoche Rd\CAD\bridge\S70300a-f-a01dt01.dgn

USERNAME => Andrew.Mitchell PLOTTED => 11/5/2020 TIME PLOTTED => 3:54:38 PM

DIST	COUNTY	ROUTE	SHEET No	TOTAL SHEETS
05	SBt	PANOCHE ROAD	25	33

REGISTERED CIVIL ENGINEER — DATE 11/05/20

PRELIMINARY PLANS

PLANS APPROVAL DATE

REGISTERED PROFESSIONAL ENGINEER — Scott McCauley — No. 71495 — Exp. 12-31-21 — CIVIL — STATE OF CALIFORNIA

The identity or its officers or agents shall not be responsible for the accuracy or completeness of electronic copies of this plan sheet.

QUINCY ENGINEERING 11017 Cobblerock Dr #100 Rancho Cordova, CA 95670

San Benito County - Public Works Department
2301 Technology Parkway
Hollister, CA 95023

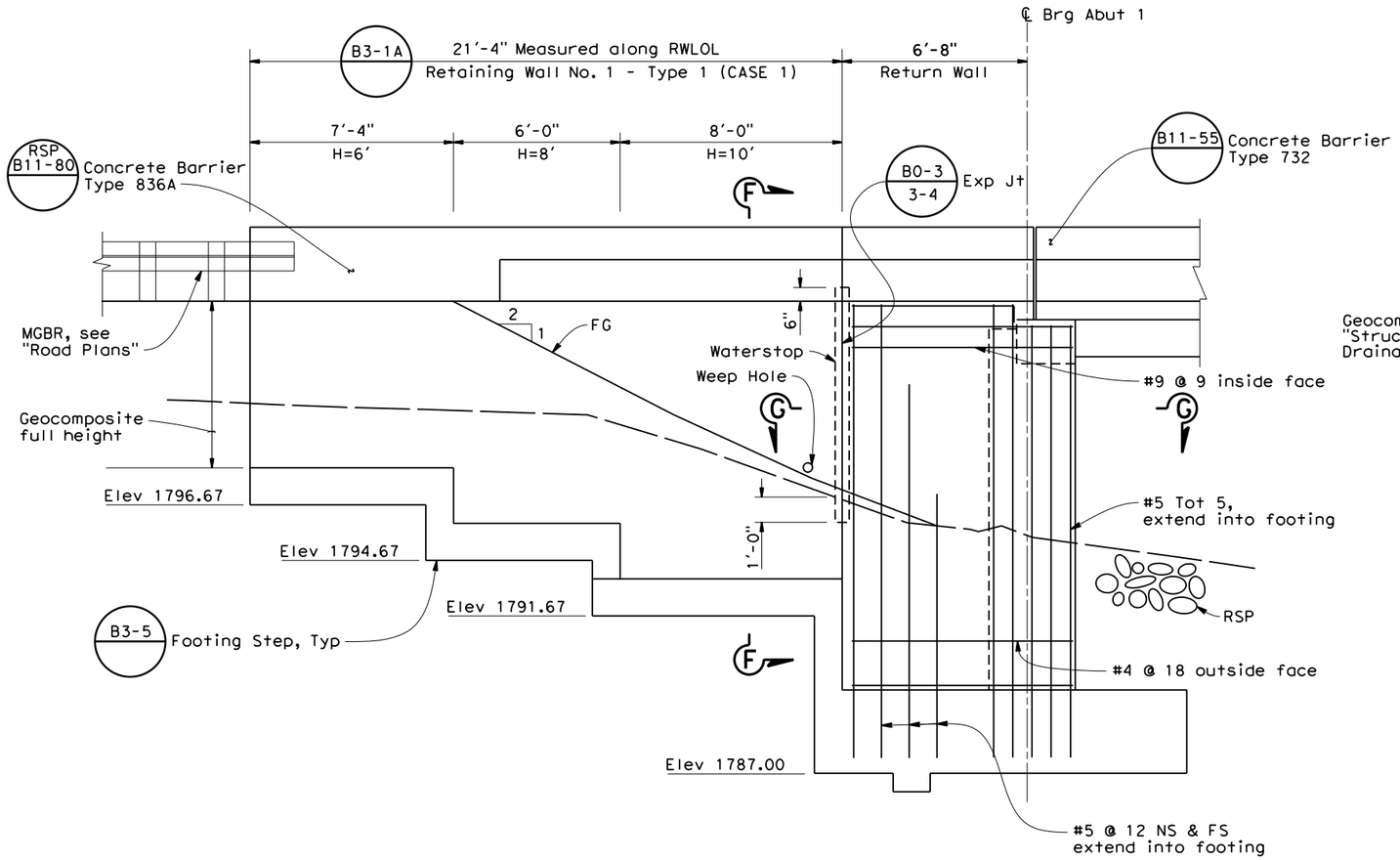

ABUTMENT 1 SOUTH ELEVATION

3/8"=1'-0"

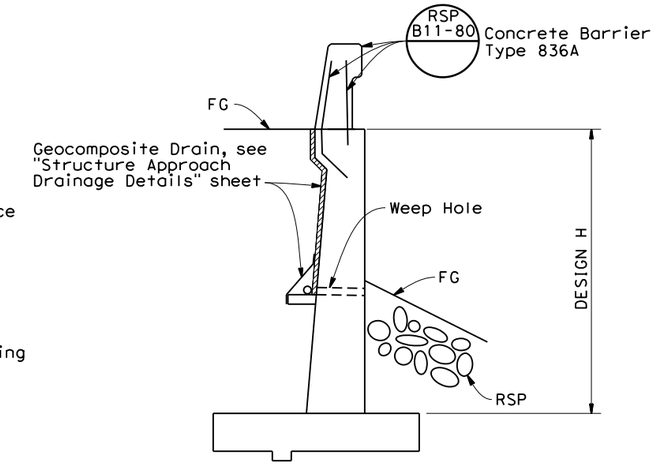

SECTION F-F

3/8"=1'-0"

Notes:

1. Top of wall elevations shall match roadway grades. See "Road Plans."

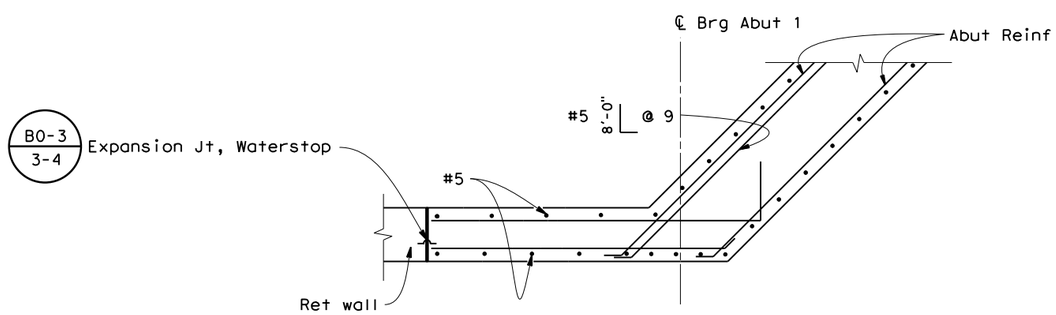

SECTION G-G

1/2"=1'-0"

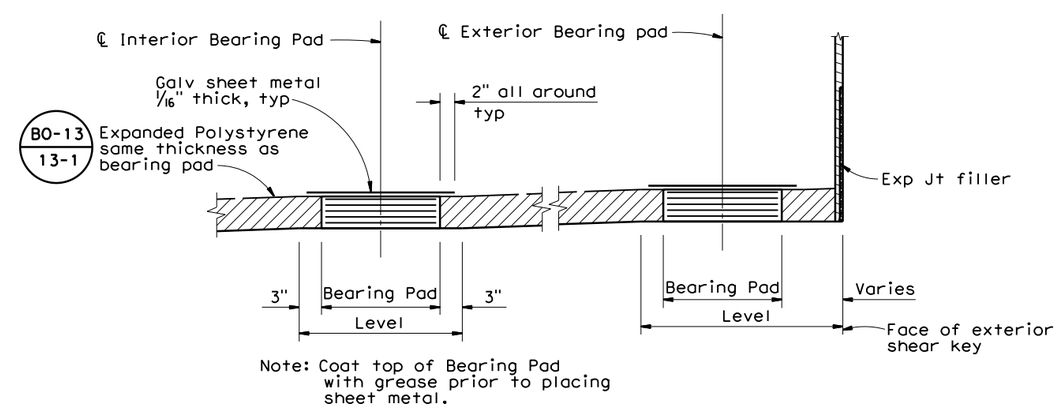

BEARING PAD DETAIL

No Scale

X
DESIGN OVERSIGHT
X
SIGN OFF DATE

	BY	CHECKED
DESIGN	S. McCauley	X
DETAILS	B. Maechler	X
QUANTITIES	X	X

PREPARED FOR THE SAN BENITO COUNTY DEPARTMENT OF PUBLIC WORKS

PROJECT ENGINEER

BRIDGE NO. 43C0070
POST MILE

PANOCHE RD BRIDGE (REPLACE)

ABUTMENT DETAILS NO.2

DESIGN DETAIL SHEET (ENGLISH) (REV.7/16/10)

ORIGINAL SCALE IN INCHES FOR REDUCED PLANS 0 1 2 3

UNIT:
PROJECT NUMBER & PHASE:
CONTRACT NO.:

DISREGARD PRINTS BEARING EARLIER REVISION DATES 1/22/13

SHEET 8 OF 13

FILE => S:\Client\San Benito Cnty - S70\S70-300 Panoche Rd\CAD\bridge\S70300a-f-a01dt02.dgn

USERNAME => Andrew.Mifsud@ PLOTTED => 11/5/2020 TIME PLOTTED => 3:54:45 PM

DIST	COUNTY	ROUTE	SHEET No	TOTAL SHEETS
05	SBt	PANOCHE ROAD	27	33

REGISTERED CIVIL ENGINEER — DATE 11/05/20

PRELIMINARY PLANS

PLANS APPROVAL DATE

REGISTERED PROFESSIONAL ENGINEER — Scott McCauley — No. 71495 — Exp. 12-31-21 — CIVIL — STATE OF CALIFORNIA

The identity or its officers or agents shall not be responsible for the accuracy or completeness of electronic copies of this plan sheet.

QUINCY ENGINEERING 11017 Cobblerock Dr #100 Rancho Cordova, CA 95670

San Benito County - Public Works Department
2301 Technology Parkway
Hollister, CA 95023

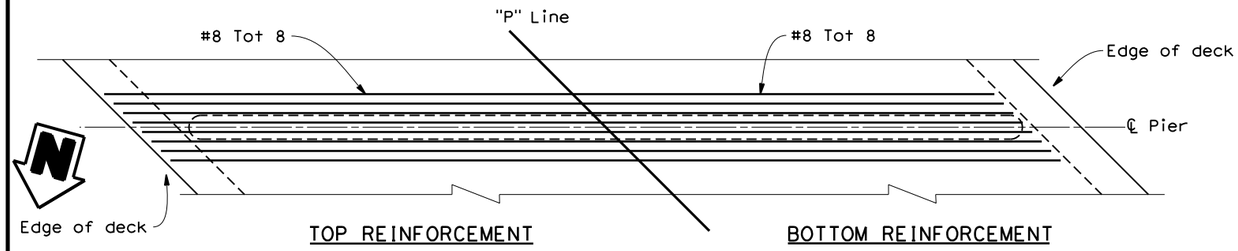

PLAN
1/4"=1'-0"

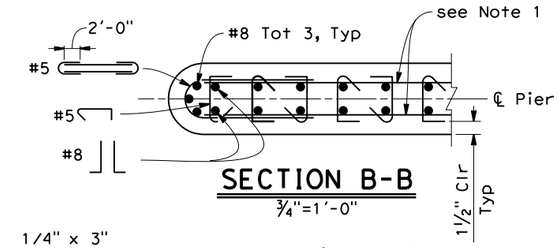

SECTION B-B
3/4"=1'-0"

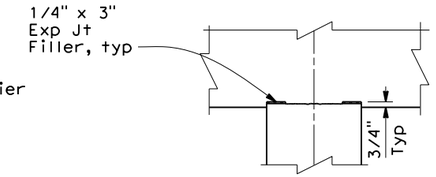

DETAIL 2
1"=1'-0"

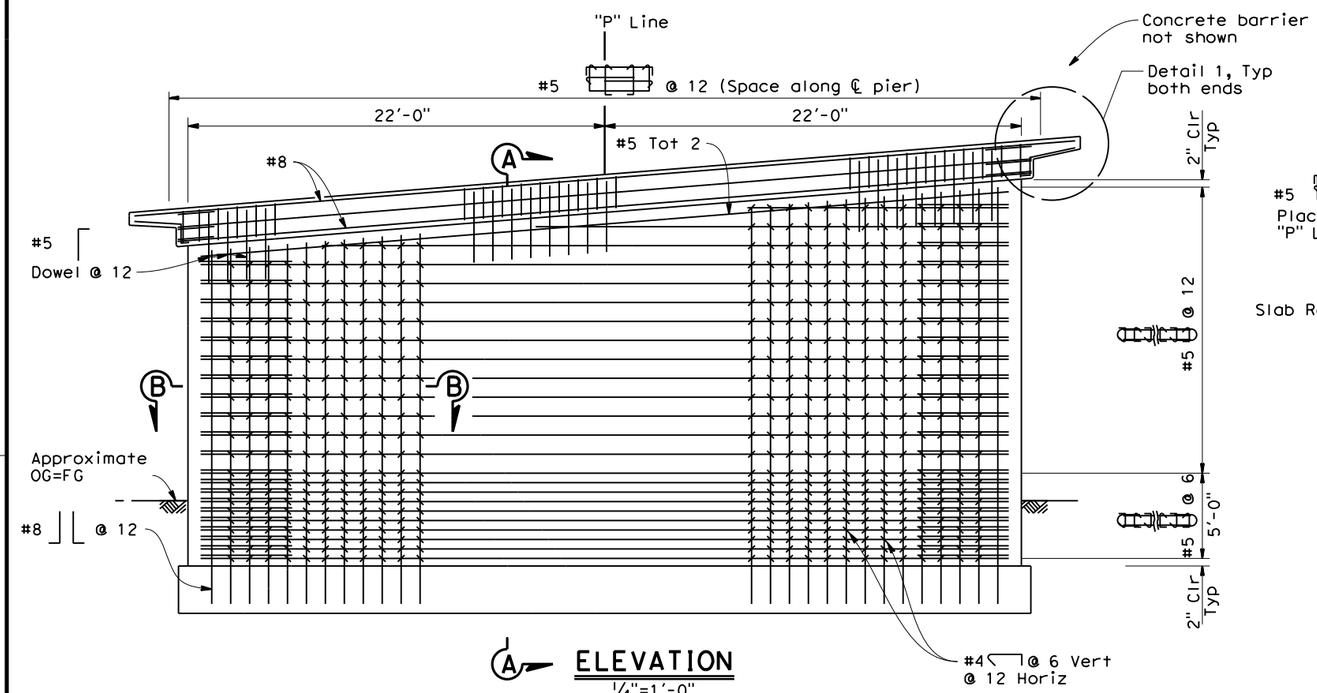

ELEVATION
1/4"=1'-0"

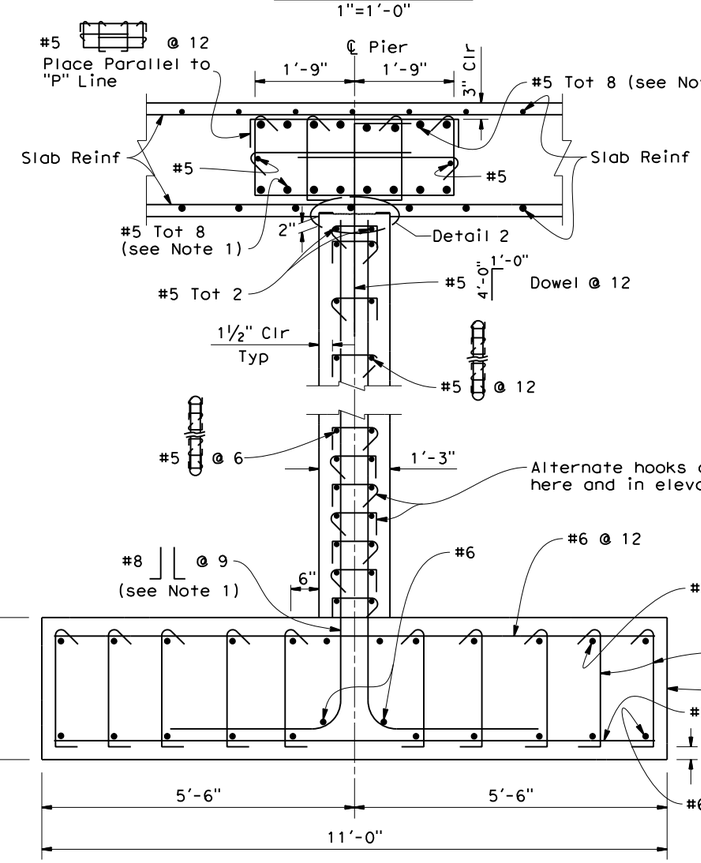

SECTION A-A
3/4"=1'-0"

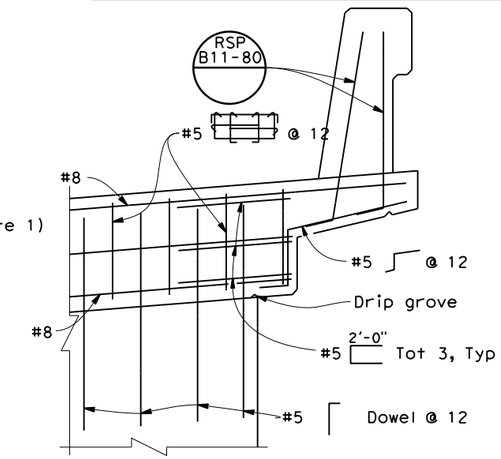

DETAIL 1
3/4"=1'-0"

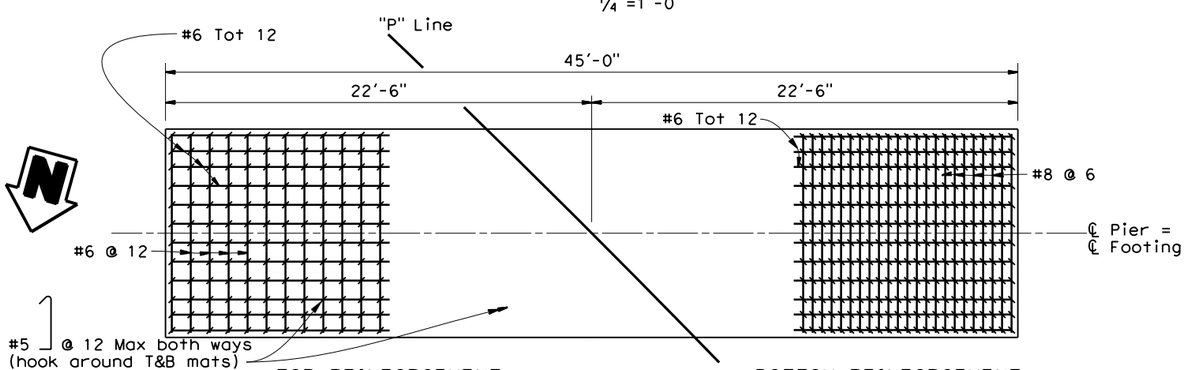

FOOTING PLAN
1/4"=1'-0"

Notes:

1. No splices allowed in main pier and pier cap reinforcement.

X DESIGN OVERSIGHT	DESIGN	BY S. McCauley	CHECKED X	PREPARED FOR THE SAN BENITO COUNTY DEPARTMENT OF PUBLIC WORKS
X SIGN OFF DATE	DETAILS	BY B. Maechler	CHECKED X	PROJECT ENGINEER
	QUANTITIES	BY X	CHECKED X	

BRIDGE NO. 43C0070 — POST MILE

PANOCHE RD BRIDGE (REPLACE)
PIER DETAILS

DESIGN DETAIL SHEET (ENGLISH) (REV.7/16/10)

ORIGINAL SCALE IN INCHES FOR REDUCED PLANS 0 1 2 3

UNIT:
PROJECT NUMBER & PHASE:
CONTRACT NO.:

DISREGARD PRINTS BEARING EARLIER REVISION DATES

REVISION DATES 1/22/13

SHEET 9 OF 13

FILE => S:\Client\San Benito Cnty - S70\S70-300 Panoche Rd\CAD\bridge\S70300a-h-b01dt01.dgn

USERNAME => Andrew.Mitchell PLOTTED => 11/5/2020 TIME PLOTTED => 3:54:59 PM

DIST	COUNTY	ROUTE	SHEET No	TOTAL SHEETS
05	SBt	PANOCHE ROAD	28	33

REGISTERED CIVIL ENGINEER — DATE 11/05/20

PRELIMINARY PLANS

PLANS APPROVAL DATE

REGISTERED PROFESSIONAL ENGINEER — Scott McCauley — No. 71495 — Exp. 12-31-21 — CIVIL — STATE OF CALIFORNIA

The identity or its officers or agents shall not be responsible for the accuracy or completeness of electronic copies of this plan sheet.

QUINCY ENGINEERING 11017 Cobblerock Dr #100 Rancho Cordova, CA 95670

San Benito County - Public Works Department
2301 Technology Parkway
Hollister, CA 95023

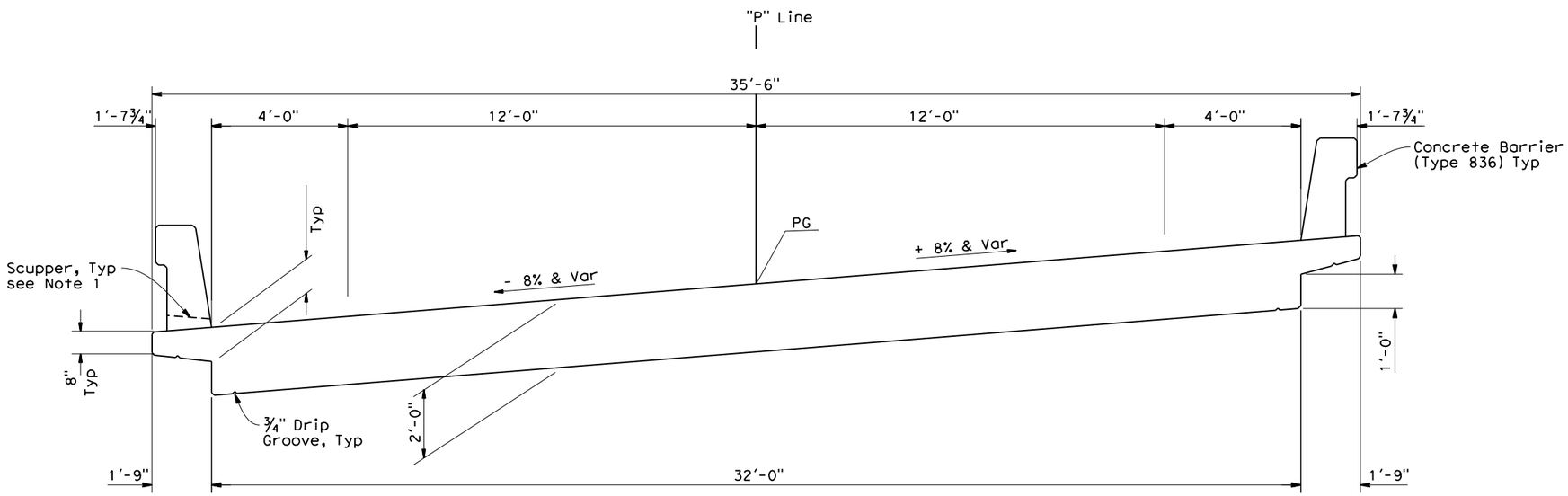

TYPICAL SECTION

½"=1'-0"

B7-8 | RSP B11-79 | RSP B11-80

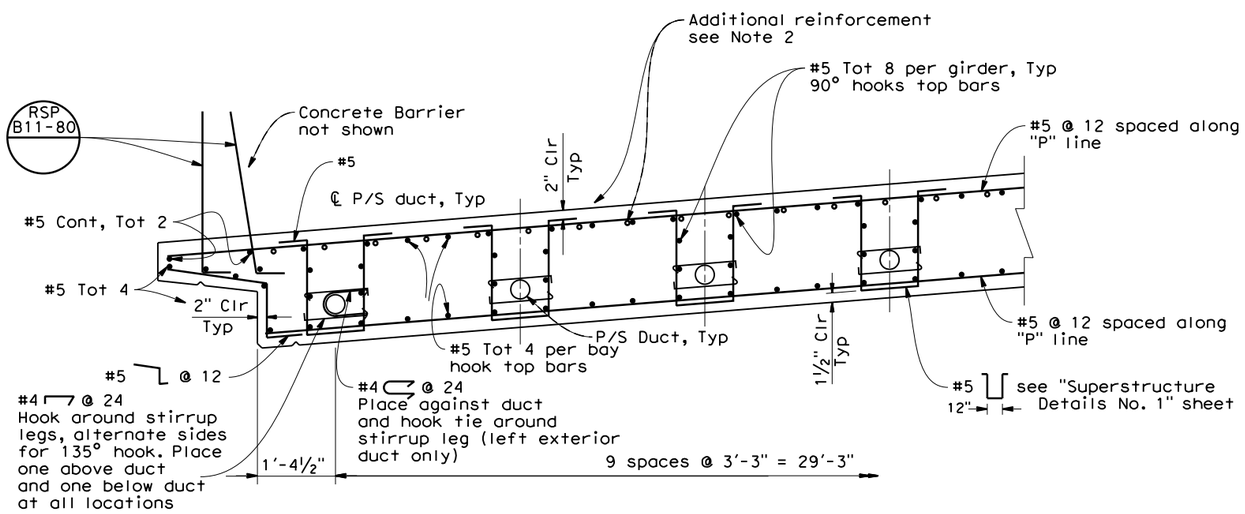

PART TYPICAL SECTION

¾"=1'-0"

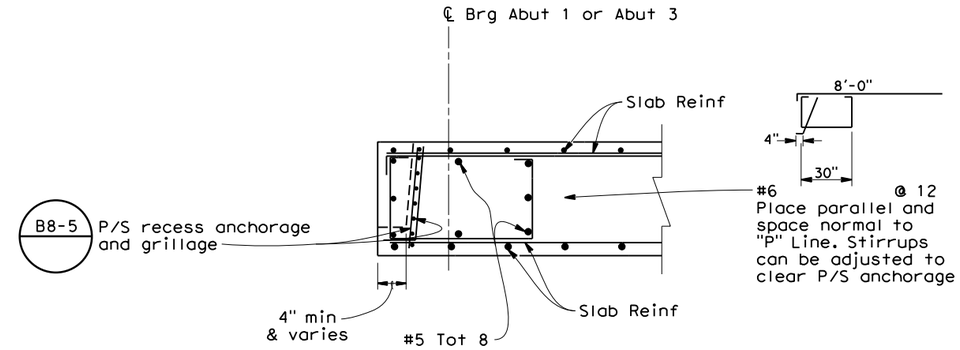

END DIAPHRAGM

¾"=1'-0"

Notes:

1. For location of scuppers, see "Superstructure Details No. 1" sheet.
2. For additional reinforcement, see "Superstructure Details No. 2" sheet.

DESIGN	BY S. McCauley	CHECKED X	
DETAILS	BY B. Maechler	CHECKED X	
QUANTITIES	BY X	CHECKED X	

X — DESIGN OVERSIGHT
X — SIGN OFF DATE

PREPARED FOR THE SAN BENITO COUNTY DEPARTMENT OF PUBLIC WORKS

PROJECT ENGINEER

BRIDGE NO. 43C0070
POST MILE

PANOCHE RD BRIDGE (REPLACE)

TYPICAL SECTION

DESIGN DETAIL SHEET (ENGLISH) (REV.7/16/10)

ORIGINAL SCALE IN INCHES FOR REDUCED PLANS 0 1 2 3

UNIT:
PROJECT NUMBER & PHASE:
CONTRACT NO.:

DISREGARD PRINTS BEARING EARLIER REVISION DATES 1/22/13

REVISION DATES | SHEET 10 | OF 13

FILE => S:\Client\San Benito Cnty - S70\S70-300 Panoche Rd\CAD\bridge\S70300a-k-ts01.dgn

USERNAME => Andrew.Mitchell PLOTTED => 11/5/2020 TIME PLOTTED => 3:55:07 PM

DIST	COUNTY	ROUTE	SHEET No	TOTAL SHEETS
05	SBt	PANOCHE ROAD	29	33

REGISTERED CIVIL ENGINEER — DATE 11/05/20

PRELIMINARY PLANS

PLANS APPROVAL DATE

REGISTERED PROFESSIONAL ENGINEER — Scott McCauley — No. 71495 — Exp. 12-31-21 — CIVIL — STATE OF CALIFORNIA

The identity or its officers or agents shall not be responsible for the accuracy or completeness of electronic copies of this plan sheet.

QUINCY ENGINEERING
11017 Cobblerock Dr #100
Rancho Cordova, CA 95670

San Benito County - Public Works Department
2301 Technology Parkway
Hollister, CA 95023

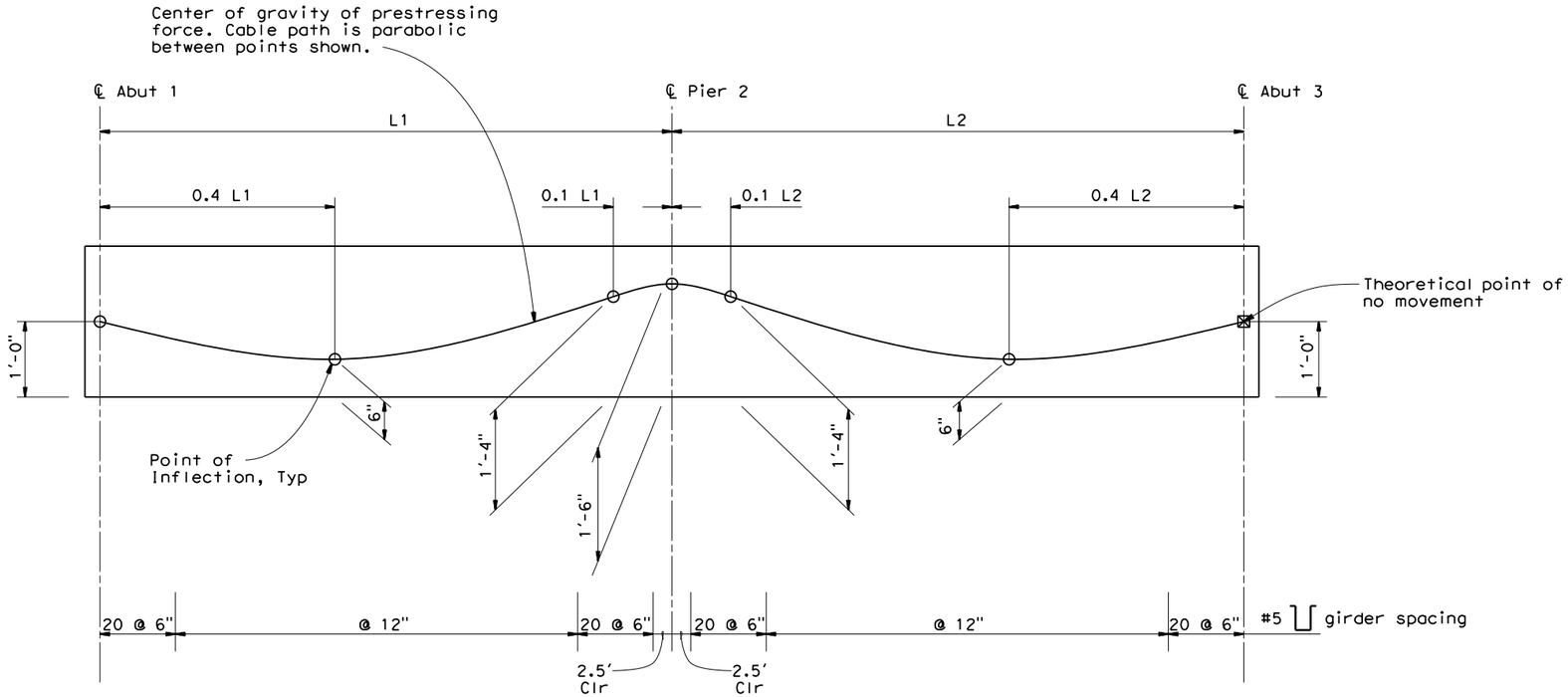

LONGITUDINAL SECTION

NO SCALE

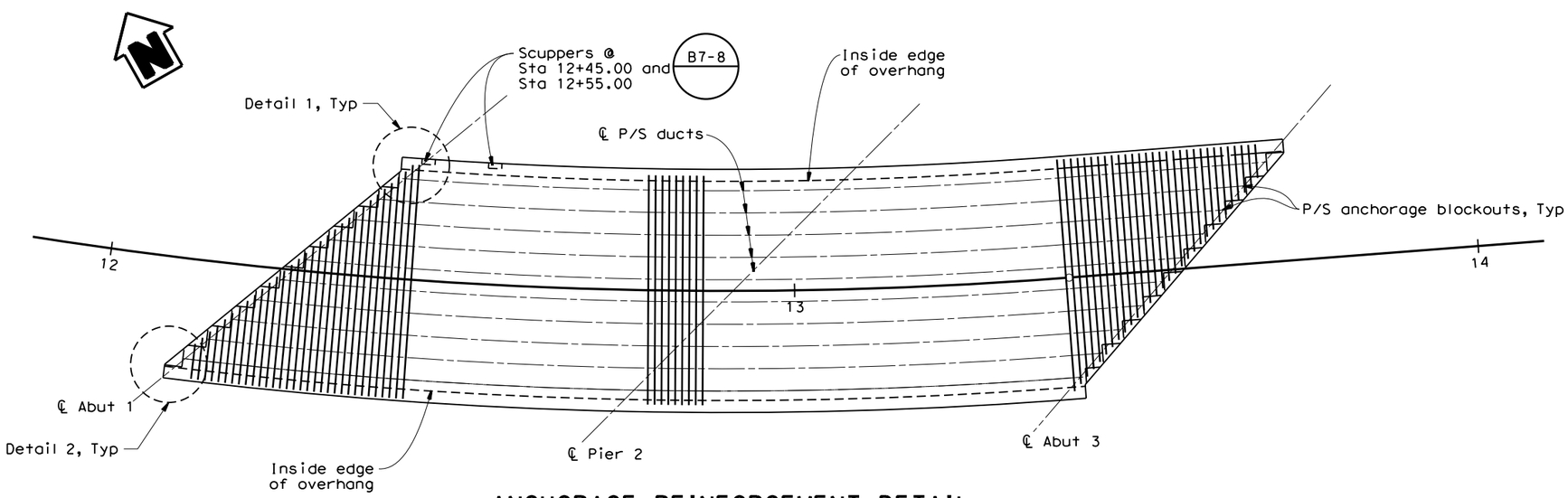

ANCHORAGE REINFORCEMENT DETAIL

1"=10'

Notes:

1. For "Details 1" and "Detail 2", see "Superstructure Details No. 2" sheet.

PRESTRESSING NOTES

270 KSI Low Relaxation Strand:

P_{jack} = 10,000 kips

Anchor Set = 3/8 in

Total Number of P/S ducts = 10

Distribution of prestress force (Pjack) between ducts shall not exceed the ratio of 3:2.
Maximum final force variation between ducts shall not exceed 300 kips.
Concrete: f'_c = 5000 psi @ 28 days

f'_{ci} = 4000 psi @ time of stressing

Contractor shall submit elongation calculations based on initial stress at

☒ = 0.95 times jacking stress.

μ = 0.15 K = 0.0002

Jacking shall be performend from abutment 1 only.

X
DESIGN OVERSIGHT
X
SIGN OFF DATE

	BY	CHECKED
DESIGN	S. McCauley	X
DETAILS	B. Maechler	X
QUANTITIES	X	X

PREPARED FOR THE SAN BENITO COUNTY DEPARTMENT OF PUBLIC WORKS

PROJECT ENGINEER

BRIDGE NO. 43C0070
POST MILE

PANOCHE RD BRIDGE (REPLACE)

SUPERSTRUCTURE DETAILS No. 1

DESIGN DETAIL SHEET (ENGLISH) (REV.7/16/10)

ORIGINAL SCALE IN INCHES FOR REDUCED PLANS 0 1 2 3

UNIT:
PROJECT NUMBER & PHASE:
CONTRACT NO.:

DISREGARD PRINTS BEARING EARLIER REVISION DATES 1/22/13

REVISION DATES | SHEET 11 | OF 13

FILE => S:\Client\San Benito Cnty - S70\S70-300 Panoche Rd\CAD\bridge\S70300a-m-1sec.dgn

USERNAME => Andrew.Mitchell | DATE/TIME PLOTTED => 11/5/2020 3:55:15 PM

DIST	COUNTY	ROUTE	SHEET No	TOTAL SHEETS
05	SBt	PANOCHE ROAD	30	33

REGISTERED CIVIL ENGINEER 11/05/20 DATE

PRELIMINARY PLANS

PLANS APPROVAL DATE

The identity or its officers or agents shall not be responsible for the accuracy or completeness of electronic copies of this plan sheet.

REGISTERED PROFESSIONAL ENGINEER Scott McCauley No. 71495 Exp. 12-31-21 CIVIL STATE OF CALIFORNIA

QUINCY ENGINEERING 11017 Cobblerock Dr #100 Rancho Cordova, CA 95670

San Benito County - Public Works Department
2301 Technology Parkway
Hollister, CA 95023

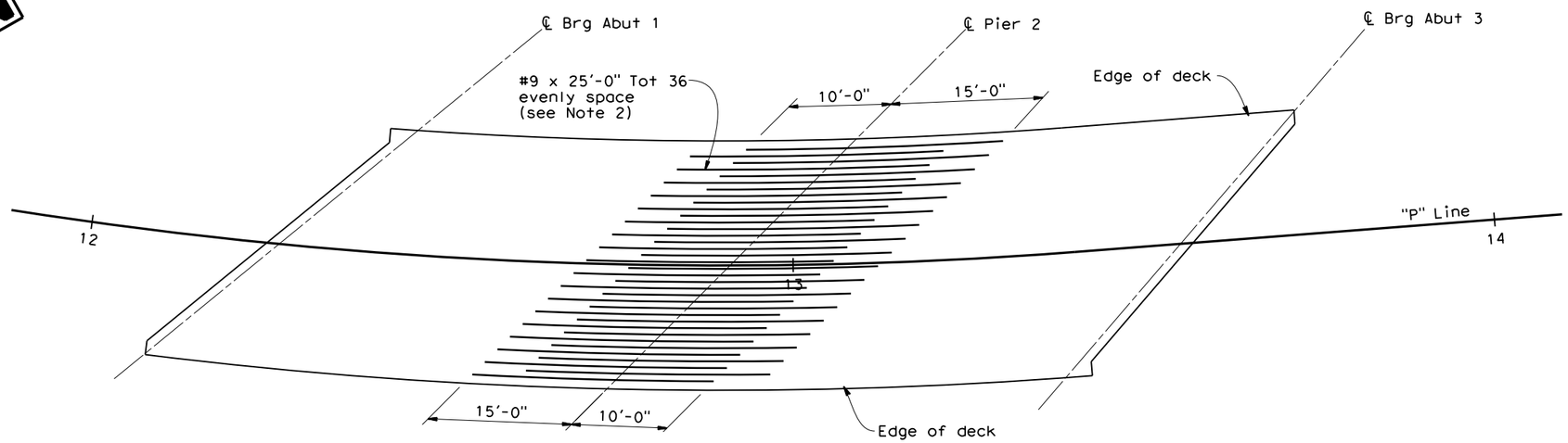

ADDITIONAL TOP SLAB REINFORCEMENT

1"=10'

Notes:

1. For location of typical top and bottom slab reinforcement, see "Typical Section" sheet.
2. No splices permitted in additional slab reinforcement.

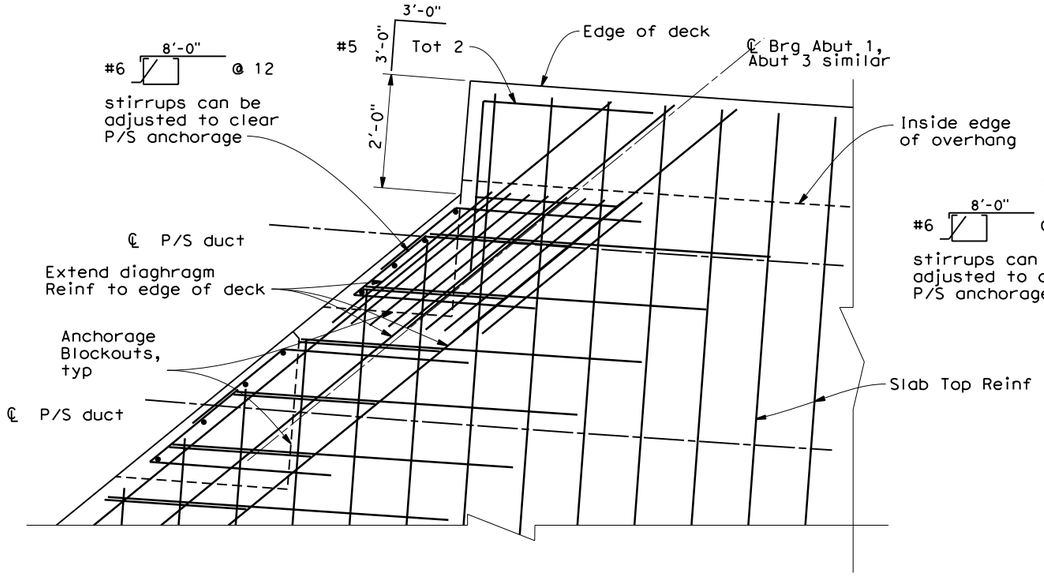

DETAIL 1 B8-5

3/4"=1'-0"

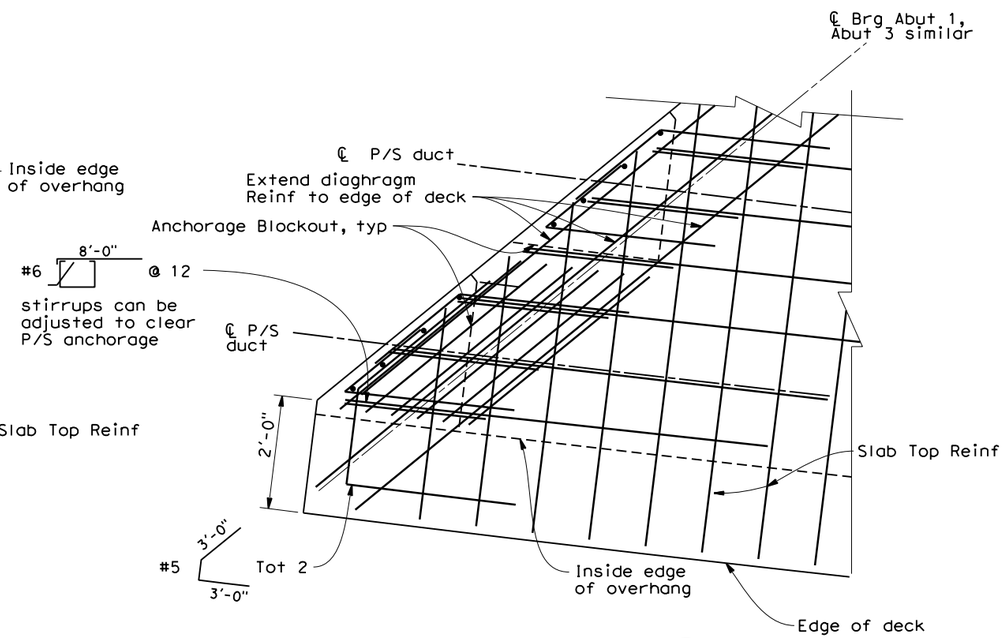

DETAIL 2 B8-5

3/4"=1'-0"

X DESIGN OVERSIGHT	DESIGN	BY S. McCauley	CHECKED X	PREPARED FOR THE SAN BENITO COUNTY DEPARTMENT OF PUBLIC WORKS	PROJECT ENGINEER
X SIGN OFF DATE	DETAILS	BY B. Maechler	CHECKED X		
	QUANTITIES	BY X	CHECKED X		

BRIDGE NO. 43C0070 | POST MILE

PANOCHE RD BRIDGE (REPLACE)

SUPERSTRUCTURE DETAILS No. 2

DESIGN DETAIL SHEET (ENGLISH) (REV.7/16/10)

ORIGINAL SCALE IN INCHES FOR REDUCED PLANS 0 1 2 3

UNIT:
PROJECT NUMBER & PHASE: CONTRACT NO.:

DISREGARD PRINTS BEARING EARLIER REVISION DATES 1/22/13

SHEET 12 OF 13

FILE => S:\Client\San Benito Cnty - S70\S70-300 Panoche Rd\CAD\bridge\S70300a-o-gir_rf01.dgn

USERNAME => Andrew.Mifsud@ DATE PLOTTED => 11/5/2020 TIME PLOTTED => 3:55:22 PM

Appendix B USFWS, CNDDB, CNPS, and NMFS Lists

United States Department of the Interior

FISH AND WILDLIFE SERVICE
Ventura Fish And Wildlife Office
2493 Portola Road, Suite B
Ventura, CA 93003-7726
Phone: (805) 644-1766 Fax: (805) 644-3958

In Reply Refer To: June 01, 2020
Consultation Code: 08EVEN00-2020-SLI-0457
Event Code: 08EVEN00-2020-E-00940
Project Name: Panoche Road Bridge Replacement

Subject: List of threatened and endangered species that may occur in your proposed project location, and/or may be affected by your proposed project

To Whom It May Concern:

The enclosed list identifies species listed as threatened and endangered, species proposed for listing as threatened or endangered, designated and proposed critical habitat, and species that are candidates for listing that may occur within the boundary of the area you have indicated using the U.S. Fish and Wildlife Service's (Service) Information Planning and Conservation System (IPaC). The species list fulfills the requirements under section 7(c) of the Endangered Species Act (Act) of 1973, as amended (16 U.S.C. 1531 et seq.). Please note that under 50 CFR 402.12(e) of the regulations implementing section 7 of the Act, the species list should be verified after 90 days. We recommend that verification be completed by visiting the IPaC website at regular intervals during project planning and implementation for updates to species lists following the same process you used to receive the enclosed list. Please include the Consultation Tracking Number in the header of this letter with any correspondence about the species list.

Due to staff shortages and excessive workload, we are unable to provide an official list more specific to your area. Numerous other sources of information are available for you to narrow the list to the habitats and conditions of the site in which you are interested. For example, we recommend conducting a biological site assessment or surveys for plants and animals that could help refine the list.

If a Federal agency is involved in the project, that agency has the responsibility to review its proposed activities and determine whether any listed species may be affected. If the project is a major construction project*, the Federal agency has the responsibility to prepare a biological assessment to make a determination of the effects of the action on the listed species or critical habitat. If the Federal agency determines that a listed species or critical habitat is likely to be adversely affected, it should request, in writing through our office, formal consultation pursuant to section 7 of the Act. Informal consultation may be used to exchange information and resolve conflicts with respect to threatened or endangered species or their critical habitat prior to a

written request for formal consultation. During this review process, the Federal agency may engage in planning efforts but may not make any irreversible commitment of resources. Such a commitment could constitute a violation of section 7(d) of the Act.

Federal agencies are required to confer with the Service, pursuant to section 7(a)(4) of the Act, when an agency action is likely to jeopardize the continued existence of any proposed species or result in the destruction or adverse modification of proposed critical habitat (50 CFR 402.10(a)). A request for formal conference must be in writing and should include the same information that would be provided for a request for formal consultation. Conferences can also include discussions between the Service and the Federal agency to identify and resolve potential conflicts between an action and proposed species or proposed critical habitat early in the decision-making process. The Service recommends ways to minimize or avoid adverse effects of the action. These recommendations are advisory because the jeopardy prohibition of section 7(a)(2) of the Act does not apply until the species is listed or the proposed critical habitat is designated. The conference process fulfills the need to inform Federal agencies of possible steps that an agency might take at an early stage to adjust its actions to avoid jeopardizing a proposed species.

When a proposed species or proposed critical habitat may be affected by an action, the lead Federal agency may elect to enter into formal conference with the Service even if the action is not likely to jeopardize or result in the destruction or adverse modification of proposed critical habitat. If the proposed species is listed or the proposed critical habitat is designated after completion of the conference, the Federal agency may ask the Service, in writing, to confirm the conference as a formal consultation. If the Service reviews the proposed action and finds that no significant changes in the action as planned or in the information used during the conference have occurred, the Service will confirm the conference as a formal consultation on the project and no further section 7 consultation will be necessary. Use of the formal conference process in this manner can prevent delays in the event the proposed species is listed or the proposed critical habitat is designated during project development or implementation.

Candidate species are those species presently under review by the Service for consideration for Federal listing. Candidate species should be considered in the planning process because they may become listed or proposed for listing prior to project completion. Preparation of a biological assessment, as described in section 7(c) of the Act, is not required for candidate species. If early evaluation of your project indicates that it is likely to affect a candidate species, you may wish to request technical assistance from this office.

Only listed species receive protection under the Act. However, sensitive species should be considered in the planning process in the event they become listed or proposed for listing prior to project completion. We recommend that you review information in the California Department of Fish and Wildlife's Natural Diversity Data Base. You can contact the California Department of Fish and Wildlife at (916) 324-3812 for information on other sensitive species that may occur in this area.

[*A Biological Assessment is required for construction projects (or other undertakings having similar physical impacts) that are major Federal actions significantly affecting the quality of the human environment as defined in the National Environmental Policy Act (42 U.S.C. 4332(2)(c)). For projects other than major construction activities, the Service suggests that a biological evaluation similar to a Biological Assessment be prepared to determine whether the project may affect listed or proposed species and/or designated or proposed critical habitat. Recommended contents of a Biological Assessment are described at 50 CFR 402.12.]

Attachment(s):

- Official Species List

Official Species List

This list is provided pursuant to Section 7 of the Endangered Species Act, and fulfills the requirement for Federal agencies to "request of the Secretary of the Interior information whether any species which is listed or proposed to be listed may be present in the area of a proposed action".

This species list is provided by:

Ventura Fish And Wildlife Office
2493 Portola Road, Suite B
Ventura, CA 93003-7726
(805) 644-1766

Project Summary

Consultation Code: 08EVEN00-2020-SLI-0457

Event Code: 08EVEN00-2020-E-00940

Project Name: Panoche Road Bridge Replacement

Project Type: BRIDGE CONSTRUCTION / MAINTENANCE

Project Description: LSA Project No. QCE2001

Project Location:

Approximate location of the project can be viewed in Google Maps: https://www.google.com/maps/place/36.654581489880925N121.06696697876367W

Counties: San Benito, CA

Endangered Species Act Species

There is a total of 7 threatened, endangered, or candidate species on this species list.

Species on this list should be considered in an effects analysis for your project and could include species that exist in another geographic area. For example, certain fish may appear on the species list because a project could affect downstream species.

IPaC does not display listed species or critical habitats under the sole jurisdiction of NOAA Fisheries[1], as USFWS does not have the authority to speak on behalf of NOAA and the Department of Commerce.

See the "Critical habitats" section below for those critical habitats that lie wholly or partially within your project area under this office's jurisdiction. Please contact the designated FWS office if you have questions.

---

1. NOAA Fisheries, also known as the National Marine Fisheries Service (NMFS), is an office of the National Oceanic and Atmospheric Administration within the Department of Commerce.

Birds

NAME	STATUS
California Condor *Gymnogyps californianus* Population: U.S.A. only, except where listed as an experimental population There is **final** critical habitat for this species. Your location is outside the critical habitat. Species profile: https://ecos.fws.gov/ecp/species/8193	Endangered
Least Bell's Vireo *Vireo bellii pusillus* There is **final** critical habitat for this species. Your location is outside the critical habitat. Species profile: https://ecos.fws.gov/ecp/species/5945	Endangered
Southwestern Willow Flycatcher *Empidonax traillii extimus* There is **final** critical habitat for this species. Your location is outside the critical habitat. Species profile: https://ecos.fws.gov/ecp/species/6749	Endangered

Reptiles

NAME	STATUS
Blunt-nosed Leopard Lizard *Gambelia silus* No critical habitat has been designated for this species. Species profile: https://ecos.fws.gov/ecp/species/625	Endangered

Amphibians

NAME	STATUS
California Red-legged Frog *Rana draytonii* There is **final** critical habitat for this species. Your location overlaps the critical habitat. Species profile: https://ecos.fws.gov/ecp/species/2891	Threatened

Crustaceans

NAME	STATUS
Vernal Pool Fairy Shrimp *Branchinecta lynchi* There is **final** critical habitat for this species. Your location is outside the critical habitat. Species profile: https://ecos.fws.gov/ecp/species/498	Threatened

Flowering Plants

NAME	STATUS
Marsh Sandwort *Arenaria paludicola* No critical habitat has been designated for this species. Species profile: https://ecos.fws.gov/ecp/species/2229	Endangered

Critical habitats

There is 1 critical habitat wholly or partially within your project area under this office's jurisdiction.

NAME	STATUS
California Red-legged Frog *Rana draytonii* https://ecos.fws.gov/ecp/species/2891#crithab	Final

Selected Elements by Scientific Name

California Department of Fish and Wildlife

California Natural Diversity Database

Query Criteria: Quad IS (Quien Sabe Valley (3612172) OR Ruby Canyon (3612171) OR Ortigalita Peak (3612078) OR Cherry Peak (3612162) OR Panoche Pass (3612161) OR Cerro Colorado (3612068) OR Bickmore Canyon (3612152) OR San Benito (3612151) OR Llanada (3612058))

Species	Element Code	Federal Status	State Status	Global Rank	State Rank	Rare Plant Rank/CDFW SSC or FP
Accipiter cooperii Cooper's hawk	ABNKC12040	None	None	G5	S4	WL
Ambystoma californiense California tiger salamander	AAAAA01180	Threatened	Threatened	G2G3	S2S3	WL
Ammospermophilus nelsoni Nelson's antelope squirrel	AMAFB04040	None	Threatened	G2	S2S3	
Anniella pulchra northern California legless lizard	ARACC01020	None	None	G3	S3	SSC
Asio otus long-eared owl	ABNSB13010	None	None	G5	S3?	SSC
Athene cunicularia burrowing owl	ABNSB10010	None	None	G4	S3	SSC
Bombus caliginosus obscure bumble bee	IIHYM24380	None	None	G4?	S1S2	
Branchinecta lynchi vernal pool fairy shrimp	ICBRA03030	Threatened	None	G3	S3	
Calicina arida San Benito harvestman	ILARAU8010	None	None	G1	S1	
Campanula exigua chaparral harebell	PDCAM020A0	None	None	G2	S2	1B.2
Charadrius montanus mountain plover	ABNNB03100	None	None	G3	S2S3	SSC
Chorizanthe biloba var. immemora Hernandez spineflower	PDPGN04025	None	None	G3T1T2	S1S2	1B.2
Corynorhinus townsendii Townsend's big-eared bat	AMACC08010	None	None	G3G4	S2	SSC
Delphinium californicum ssp. interius Hospital Canyon larkspur	PDRAN0B0A2	None	None	G3T3	S3	1B.2
Delphinium recurvatum recurved larkspur	PDRAN0B1J0	None	None	G2?	S2?	1B.2
Dipodomys venustus elephantinus big-eared kangaroo rat	AMAFD03041	None	None	G4T2	S2	SSC
Elanus leucurus white-tailed kite	ABNKC06010	None	None	G5	S3S4	FP
Emys marmorata western pond turtle	ARAAD02030	None	None	G3G4	S3	SSC

Species	Element Code	Federal Status	State Status	Global Rank	State Rank	Rare Plant Rank/CDFW SSC or FP
Eriogonum heermannii var. occidentale western Heermann's buckwheat	PDPGN082P6	None	None	G5T2	S2	1B.2
Eriogonum nortonii Pinnacles buckwheat	PDPGN08470	None	None	G2	S2	1B.3
Falco mexicanus prairie falcon	ABNKD06090	None	None	G5	S4	WL
Falco peregrinus anatum American peregrine falcon	ABNKD06071	Delisted	Delisted	G4T4	S3S4	FP
Gambelia sila blunt-nosed leopard lizard	ARACF07010	Endangered	Endangered	G1	S1	FP
Lagophylla diabolensis Diablo Range hare-leaf	PDAST5J060	None	None	G2	S2	1B.2
Layia munzii Munz's tidy-tips	PDAST5N0B0	None	None	G2	S2	1B.2
Lepidium jaredii ssp. album Panoche pepper-grass	PDBRA1M0G2	None	None	G2G3T2T3	S2S3	1B.2
Lepidurus packardi vernal pool tadpole shrimp	ICBRA10010	Endangered	None	G4	S3S4	
Madia radiata showy golden madia	PDAST650E0	None	None	G3	S3	1B.1
Malacothamnus aboriginum Indian Valley bush-mallow	PDMAL0Q020	None	None	G3	S3	1B.2
Masticophis flagellum ruddocki San Joaquin coachwhip	ARADB21021	None	None	G5T2T3	S2?	SSC
Navarretia nigelliformis ssp. radians shining navarretia	PDPLM0C0J2	None	None	G4T2	S2	1B.2
Navarretia panochensis Panoche navarretia	PDPLM0C220	None	None	G3	S3	1B.3
Nemacladus secundiflorus var. robbinsii Robbins' nemacladus	PDCAM0F0B2	None	None	G3T2	S2	1B.2
North Central Coast Drainage Sacramento Sucker/Roach River North Central Coast Drainage Sacramento Sucker/Roach River	CARA2623CA	None	None	GNR	SNR	
Onychomys torridus tularensis Tulare grasshopper mouse	AMAFF06021	None	None	G5T1T2	S1S2	SSC
Optioservus canus Pinnacles optioservus riffle beetle	IICOL5E020	None	None	G1	S1	
Phrynosoma blainvillii coast horned lizard	ARACF12100	None	None	G3G4	S3S4	SSC
Rana boylii foothill yellow-legged frog	AAABH01050	None	Candidate Threatened	G3	S3	SSC
Rana draytonii California red-legged frog	AAABH01022	Threatened	None	G2G3	S2S3	SSC

Species	Element Code	Federal Status	State Status	Global Rank	State Rank	Rare Plant Rank/CDFW SSC or FP
Senecio aphanactis chaparral ragwort	PDAST8H060	None	None	G3	S2	2B.2
Spea hammondii western spadefoot	AAABF02020	None	None	G3	S3	SSC
Streptanthus insignis ssp. lyonii Arburua Ranch jewelflower	PDBRA2G0Q1	None	None	G3G4T2	S2	1B.2
Vulpes macrotis mutica San Joaquin kit fox	AMAJA03041	Endangered	Threatened	G4T2	S2	

Record Count: 43

CNPS California Native Plant Society Inventory of Rare and Endangered Plants

*The database used to provide updates to the Online Inventory is under construction. View updates and changes made since May 2019 here.

Plant List

29 matches found. *Click on scientific name for details*

Search Criteria

Found in Quads 3612172, 3612171, 3612078, 3612162, 3612161, 3612068, 3612152 3612151 and 3612058;

Modify Search Criteria Export to Excel Modify Columns Modify Sort Display Photos

Scientific Name	Common Name	Family	Lifeform	Blooming Period	CA Rare Plant Rank	State Rank	Global Rank
Acanthomintha lanceolata	Santa Clara thorn-mint	Lamiaceae	annual herb	Mar-Jun	4.2	S4	G4
Acanthomintha obovata ssp. obovata	San Benito thorn-mint	Lamiaceae	annual herb	Apr-Jul	4.2	S3S4	G4T3T4
Allium howellii var. howellii	Howell's onion	Alliaceae	perennial bulbiferous herb	Mar-Apr	4.3	S3	G3G4T3
Androsace elongata ssp. acuta	California androsace	Primulaceae	annual herb	Mar-Jun	4.2	S3S4	G5? T3T4
Astragalus macrodon	Salinas milk-vetch	Fabaceae	perennial herb	Apr-Jul	4.3	S4	G4
Benitoa occidentalis	western lessingia	Asteraceae	annual herb	May-Nov	4.3	S3S4	G3G4
Calystegia collina ssp. venusta	South Coast Range morning-glory	Convolvulaceae	perennial rhizomatous herb	Apr-Jun	4.3	S4	G4T4
Camissonia benitensis	San Benito evening-primrose	Onagraceae	annual herb	Apr-Jun	1B.1	S2	G2
Campanula exigua	chaparral harebell	Campanulaceae	annual herb	May-Jun	1B.2	S2	G2
Chorizanthe biloba var. immemora	Hernandez spineflower	Polygonaceae	annual herb	May-Aug(Sep)	1B.2	S1S2	G3T1T2
Chorizanthe douglasii	Douglas' spineflower	Polygonaceae	annual herb	Apr-Jul	4.3	S4	G4
Clarkia breweri	Brewer's clarkia	Onagraceae	annual herb	Apr-Jun	4.2	S4	G4
Clarkia lewisii	Lewis' clarkia	Onagraceae	annual herb	May-Jul	4.3	S4	G4
Cryptantha rattanii	Rattan's cryptantha	Boraginaceae	annual herb	Apr-Jul	4.3	S4	G4
Delphinium californicum ssp. interius	Hospital Canyon larkspur	Ranunculaceae	perennial herb	Apr-Jun	1B.2	S3	G3T3
Delphinium recurvatum	recurved larkspur	Ranunculaceae	perennial herb	Mar-Jun	1B.2	S2?	G2?
Eriogonum elegans	elegant wild buckwheat	Polygonaceae	annual herb	May-Nov	4.3	S4S5	G4G5
Eriogonum heermannii var. occidentale	western Heermann's buckwheat	Polygonaceae	perennial deciduous shrub	Jul-Oct	1B.2	S2	G5T2
Eriogonum nortonii	Pinnacles buckwheat	Polygonaceae	annual herb	(Apr)May-Aug(Sep)	1B.3	S2	G2
Lagophylla diabolensis	Diablo Range hare-leaf	Asteraceae	annual herb	Apr-Sep	1B.2	S2	G2
Madia radiata	showy golden madia	Asteraceae	annual herb	Mar-May	1B.1	S3	G3
Malacothamnus aboriginum	Indian Valley bush-mallow	Malvaceae	perennial deciduous shrub	Apr-Oct	1B.2	S3	G3
Microseris paludosa	marsh microseris	Asteraceae	perennial herb	Apr-Jun(Jul)	1B.2	S2	G2
Navarretia nigelliformis ssp. nigelliformis	adobe navarretia	Polemoniaceae	annual herb	Apr-Jun	4.2	S3	G4T3
	shining navarretia	Polemoniaceae	annual herb	(Mar)Apr-Jul	1B.2	S2	G4T2

Navarretia nigelliformis ssp. radians							
Nemacladus secundiflorus var. robbinsii	Robbins' nemacladus	Campanulaceae	annual herb	Apr-Jun	1B.2	S2	G3T2
Plagiobothrys uncinatus	hooked popcornflower	Boraginaceae	annual herb	Apr-May	1B.2	S2	G2
Senecio aphanactis	chaparral ragwort	Asteraceae	annual herb	Jan-Apr(May)	2B.2	S2	G3
Streptanthus insignis ssp. lyonii	Arburua Ranch jewelflower	Brassicaceae	annual herb	Mar-May	1B.2	S2	G3G4T2

Suggested Citation

California Native Plant Society, Rare Plant Program. 2020. Inventory of Rare and Endangered Plants of California (online edition, v8-03 0.39). Website http://www.rareplants.cnps.org [accessed 01 June 2020].

© Copyright 2010-2018 California Native Plant Society. All rights reserved.

From: NMFSWCRCA Specieslist - NOAA Service Account
To: Anna Van Zuuk
Subject: Re: Caltrans District 5; Panoche Road Bridge Replacement at Tres Pinos Creek
Date: Monday, June 1, 2020 6:20:05 PM

Receipt of this message confirms that NMFS has received your email to nmfswcrca.specieslist@noaa.gov. If you are a federal agency (or representative) and have followed the steps outlined on the California Species List Tools web page (http://www.westcoast.fisheries.noaa.gov/maps_data/california_species_list_tools.html), you have generated an official Endangered Species Act species list.

Messages sent to this email address are not responded to directly. For project specific questions, please contact your local NMFS office.

Northern California/Klamath (Arcata) 707-822-7201

North-Central Coast (Santa Rosa) 707-387-0737

Southern California (Long Beach) 562-980-4000

California Central Valley (Sacramento) 916-930-3600

From: Anna Van Zuuk
To: "nmfswcrca.specieslist@noaa.gov"
Subject: Caltrans District 5; Panoche Road Bridge Replacement at Tres Pinos Creek
Date: Monday, June 1, 2020 6:19:00 PM
Attachments: image001.png

Federal agency name and address:
California Department of Transportation – District 5
50 Higuera Street
San Luis Obispo, CA 93401-5415
Info-d5@dt.ca.gov
(805) 549-3111

Non-federal agency (Project Proponent):
Deems Katada
San Benito County Department of Public Works
2301 Technology Parkway
Hollister, CA 95023
DKatada@cosb.us
(831) 636-4170

Point-of-contact:
Anna Van Zuuk, Biologist/Botanist
Anna.VanZuuk@lsa.net
(916) 844-2983

Quad Name **Quien Sabe Valley**

Quad Number **36121-G2**

ESA Anadromous Fish

SONCC Coho ESU (T) -
CCC Coho ESU (E) -
CC Chinook Salmon ESU (T) -
CVSR Chinook Salmon ESU (T) -
SRWR Chinook Salmon ESU (E) -
NC Steelhead DPS (T) -
CCC Steelhead DPS (T) -
SCCC Steelhead DPS (T) - **X**
SC Steelhead DPS (E) -
CCV Steelhead DPS (T) - **X**
Eulachon (T) -
sDPS Green Sturgeon (T) -

ESA Anadromous Fish Critical Habitat

SONCC Coho Critical Habitat -

CCC Coho Critical Habitat -
CC Chinook Salmon Critical Habitat -
CVSR Chinook Salmon Critical Habitat -
SRWR Chinook Salmon Critical Habitat -
NC Steelhead Critical Habitat -
CCC Steelhead Critical Habitat -
SCCC Steelhead Critical Habitat -
SC Steelhead Critical Habitat -
CCV Steelhead Critical Habitat -
Eulachon Critical Habitat -
sDPS Green Sturgeon Critical Habitat -

ESA Marine Invertebrates

Range Black Abalone (E) -
Range White Abalone (E) -

ESA Marine Invertebrates Critical Habitat

Black Abalone Critical Habitat -

ESA Sea Turtles

East Pacific Green Sea Turtle (T) -
Olive Ridley Sea Turtle (T/E) -
Leatherback Sea Turtle (E) -
North Pacific Loggerhead Sea Turtle (E) -

ESA Whales

Blue Whale (E) -
Fin Whale (E) -
Humpback Whale (E) -
Southern Resident Killer Whale (E) -
North Pacific Right Whale (E) -
Sei Whale (E) -
Sperm Whale (E) -

ESA Pinnipeds

Guadalupe Fur Seal (T) -
Steller Sea Lion Critical Habitat -

Essential Fish Habitat

Coho EFH -
Chinook Salmon EFH -
Groundfish EFH -
Coastal Pelagics EFH -
Highly Migratory Species EFH -

MMPA Species (See list at left)

ESA and MMPA Cetaceans/Pinnipeds

See list at left and consult the NMFS Long Beach office
562-980-4000

MMPA Cetaceans -
MMPA Pinnipeds -

Quad Name **Ruby Canyon**
Quad Number **36121-G1**

ESA Anadromous Fish

SONCC Coho ESU (T) -
CCC Coho ESU (E) -
CC Chinook Salmon ESU (T) -
CVSR Chinook Salmon ESU (T) -
SRWR Chinook Salmon ESU (E) -
NC Steelhead DPS (T) -
CCC Steelhead DPS (T) -
SCCC Steelhead DPS (T) - **X**
SC Steelhead DPS (E) -
CCV Steelhead DPS (T) - **X**
Eulachon (T) -
sDPS Green Sturgeon (T) -

ESA Anadromous Fish Critical Habitat

SONCC Coho Critical Habitat -
CCC Coho Critical Habitat -
CC Chinook Salmon Critical Habitat -
CVSR Chinook Salmon Critical Habitat -
SRWR Chinook Salmon Critical Habitat -
NC Steelhead Critical Habitat -
CCC Steelhead Critical Habitat -
SCCC Steelhead Critical Habitat -
SC Steelhead Critical Habitat -
CCV Steelhead Critical Habitat -
Eulachon Critical Habitat -
sDPS Green Sturgeon Critical Habitat -

ESA Marine Invertebrates

Range Black Abalone (E) -

Range White Abalone (E) -

ESA Marine Invertebrates Critical Habitat

Black Abalone Critical Habitat -

ESA Sea Turtles

East Pacific Green Sea Turtle (T) -

Olive Ridley Sea Turtle (T/E) -

Leatherback Sea Turtle (E) -

North Pacific Loggerhead Sea Turtle (E) -

ESA Whales

Blue Whale (E) -

Fin Whale (E) -

Humpback Whale (E) -

Southern Resident Killer Whale (E) -

North Pacific Right Whale (E) -

Sei Whale (E) -

Sperm Whale (E) -

ESA Pinnipeds

Guadalupe Fur Seal (T) -

Steller Sea Lion Critical Habitat -

Essential Fish Habitat

Coho EFH -

Chinook Salmon EFH -

Groundfish EFH -

Coastal Pelagics EFH -

Highly Migratory Species EFH -

MMPA Species (See list at left)

ESA and MMPA Cetaceans/Pinnipeds

See list at left and consult the NMFS Long Beach office 562-980-4000

MMPA Cetaceans -

MMPA Pinnipeds -

Quad Name **Ortigalita Peak**

Quad Number **36120-G8**

ESA Anadromous Fish

SONCC Coho ESU (T) -

CCC Coho ESU (E) -
CC Chinook Salmon ESU (T) -
CVSR Chinook Salmon ESU (T) -
SRWR Chinook Salmon ESU (E) -
NC Steelhead DPS (T) -
CCC Steelhead DPS (T) -
SCCC Steelhead DPS (T) - **X**
SC Steelhead DPS (E) -
CCV Steelhead DPS (T) - **X**
Eulachon (T) -
sDPS Green Sturgeon (T) -

ESA Anadromous Fish Critical Habitat

SONCC Coho Critical Habitat -
CCC Coho Critical Habitat -
CC Chinook Salmon Critical Habitat -
CVSR Chinook Salmon Critical Habitat -
SRWR Chinook Salmon Critical Habitat -
NC Steelhead Critical Habitat -
CCC Steelhead Critical Habitat -
SCCC Steelhead Critical Habitat -
SC Steelhead Critical Habitat -
CCV Steelhead Critical Habitat -
Eulachon Critical Habitat -
sDPS Green Sturgeon Critical Habitat -

ESA Marine Invertebrates

Range Black Abalone (E) -
Range White Abalone (E) -

ESA Marine Invertebrates Critical Habitat

Black Abalone Critical Habitat -

ESA Sea Turtles

East Pacific Green Sea Turtle (T) -
Olive Ridley Sea Turtle (T/E) -
Leatherback Sea Turtle (E) -
North Pacific Loggerhead Sea Turtle (E) -

ESA Whales

Blue Whale (E) -
Fin Whale (E) -
Humpback Whale (E) -
Southern Resident Killer Whale (E) -

North Pacific Right Whale (E) -
Sei Whale (E) -
Sperm Whale (E) -

ESA Pinnipeds

Guadalupe Fur Seal (T) -
Steller Sea Lion Critical Habitat -

Essential Fish Habitat

Coho EFH -
Chinook Salmon EFH -
Groundfish EFH -
Coastal Pelagics EFH -
Highly Migratory Species EFH -

MMPA Species (See list at left)

ESA and MMPA Cetaceans/Pinnipeds

See list at left and consult the NMFS Long Beach office
562-980-4000

MMPA Cetaceans -
MMPA Pinnipeds -

Quad Name **Cherry Peak**
Quad Number **36121-F2**

ESA Anadromous Fish

SONCC Coho ESU (T) -
CCC Coho ESU (E) -
CC Chinook Salmon ESU (T) -
CVSR Chinook Salmon ESU (T) -
SRWR Chinook Salmon ESU (E) -
NC Steelhead DPS (T) -
CCC Steelhead DPS (T) -
SCCC Steelhead DPS (T) - **X**
SC Steelhead DPS (E) -
CCV Steelhead DPS (T) -
Eulachon (T) -
sDPS Green Sturgeon (T) -

ESA Anadromous Fish Critical Habitat

SONCC Coho Critical Habitat -

CCC Coho Critical Habitat -
CC Chinook Salmon Critical Habitat -
CVSR Chinook Salmon Critical Habitat -
SRWR Chinook Salmon Critical Habitat -
NC Steelhead Critical Habitat -
CCC Steelhead Critical Habitat -
SCCC Steelhead Critical Habitat - **X**
SC Steelhead Critical Habitat -
CCV Steelhead Critical Habitat -
Eulachon Critical Habitat -
sDPS Green Sturgeon Critical Habitat -

ESA Marine Invertebrates

Range Black Abalone (E) -
Range White Abalone (E) -

ESA Marine Invertebrates Critical Habitat

Black Abalone Critical Habitat -

ESA Sea Turtles

East Pacific Green Sea Turtle (T) -
Olive Ridley Sea Turtle (T/E) -
Leatherback Sea Turtle (E) -
North Pacific Loggerhead Sea Turtle (E) -

ESA Whales

Blue Whale (E) -
Fin Whale (E) -
Humpback Whale (E) -
Southern Resident Killer Whale (E) -
North Pacific Right Whale (E) -
Sei Whale (E) -
Sperm Whale (E) -

ESA Pinnipeds

Guadalupe Fur Seal (T) -
Steller Sea Lion Critical Habitat -

Essential Fish Habitat

Coho EFH -
Chinook Salmon EFH -
Groundfish EFH -
Coastal Pelagics EFH -
Highly Migratory Species EFH -

MMPA Species (See list at left)

ESA and MMPA Cetaceans/Pinnipeds

See list at left and consult the NMFS Long Beach office
562-980-4000

MMPA Cetaceans -
MMPA Pinnipeds -

Quad Name **Panoche Pass**
Quad Number **36121-F1**

ESA Anadromous Fish

SONCC Coho ESU (T) -
CCC Coho ESU (E) -
CC Chinook Salmon ESU (T) -
CVSR Chinook Salmon ESU (T) -
SRWR Chinook Salmon ESU (E) -
NC Steelhead DPS (T) -
CCC Steelhead DPS (T) -
SCCC Steelhead DPS (T) - **X**
SC Steelhead DPS (E) -
CCV Steelhead DPS (T) - **X**
Eulachon (T) -
sDPS Green Sturgeon (T) -

ESA Anadromous Fish Critical Habitat

SONCC Coho Critical Habitat -
CCC Coho Critical Habitat -
CC Chinook Salmon Critical Habitat -
CVSR Chinook Salmon Critical Habitat -
SRWR Chinook Salmon Critical Habitat -
NC Steelhead Critical Habitat -
CCC Steelhead Critical Habitat -
SCCC Steelhead Critical Habitat -
SC Steelhead Critical Habitat -
CCV Steelhead Critical Habitat -
Eulachon Critical Habitat -
sDPS Green Sturgeon Critical Habitat -

ESA Marine Invertebrates

Range Black Abalone (E) -

Range White Abalone (E) -

ESA Marine Invertebrates Critical Habitat

Black Abalone Critical Habitat -

ESA Sea Turtles

East Pacific Green Sea Turtle (T) -

Olive Ridley Sea Turtle (T/E) -

Leatherback Sea Turtle (E) -

North Pacific Loggerhead Sea Turtle (E) -

ESA Whales

Blue Whale (E) -

Fin Whale (E) -

Humpback Whale (E) -

Southern Resident Killer Whale (E) -

North Pacific Right Whale (E) -

Sei Whale (E) -

Sperm Whale (E) -

ESA Pinnipeds

Guadalupe Fur Seal (T) -

Steller Sea Lion Critical Habitat -

Essential Fish Habitat

Coho EFH -

Chinook Salmon EFH -

Groundfish EFH -

Coastal Pelagics EFH -

Highly Migratory Species EFH -

MMPA Species (See list at left)

ESA and MMPA Cetaceans/Pinnipeds

See list at left and consult the NMFS Long Beach office

562-980-4000

MMPA Cetaceans -

MMPA Pinnipeds -

Quad Name **Cerro Colorado**

Quad Number **36120-F8**

ESA Anadromous Fish

SONCC Coho ESU (T) -

CCC Coho ESU (E) -
CC Chinook Salmon ESU (T) -
CVSR Chinook Salmon ESU (T) -
SRWR Chinook Salmon ESU (E) -
NC Steelhead DPS (T) -
CCC Steelhead DPS (T) -
SCCC Steelhead DPS (T) - **X**
SC Steelhead DPS (E) -
CCV Steelhead DPS (T) - **X**
Eulachon (T) -
sDPS Green Sturgeon (T) -

ESA Anadromous Fish Critical Habitat

SONCC Coho Critical Habitat -
CCC Coho Critical Habitat -
CC Chinook Salmon Critical Habitat -
CVSR Chinook Salmon Critical Habitat -
SRWR Chinook Salmon Critical Habitat -
NC Steelhead Critical Habitat -
CCC Steelhead Critical Habitat -
SCCC Steelhead Critical Habitat -
SC Steelhead Critical Habitat -
CCV Steelhead Critical Habitat -
Eulachon Critical Habitat -
sDPS Green Sturgeon Critical Habitat -

ESA Marine Invertebrates

Range Black Abalone (E) -
Range White Abalone (E) -

ESA Marine Invertebrates Critical Habitat

Black Abalone Critical Habitat -

ESA Sea Turtles

East Pacific Green Sea Turtle (T) -
Olive Ridley Sea Turtle (T/E) -
Leatherback Sea Turtle (E) -
North Pacific Loggerhead Sea Turtle (E) -

ESA Whales

Blue Whale (E) -
Fin Whale (E) -
Humpback Whale (E) -
Southern Resident Killer Whale (E) -

North Pacific Right Whale (E) -
Sei Whale (E) -
Sperm Whale (E) -

ESA Pinnipeds

Guadalupe Fur Seal (T) -
Steller Sea Lion Critical Habitat -

Essential Fish Habitat

Coho EFH -
Chinook Salmon EFH -
Groundfish EFH -
Coastal Pelagics EFH -
Highly Migratory Species EFH -

MMPA Species (See list at left)

ESA and MMPA Cetaceans/Pinnipeds

See list at left and consult the NMFS Long Beach office
562-980-4000

MMPA Cetaceans -
MMPA Pinnipeds -

Quad Name **Bickmore Canyon**
Quad Number **36121-E2**

ESA Anadromous Fish

SONCC Coho ESU (T) -
CCC Coho ESU (E) -
CC Chinook Salmon ESU (T) -
CVSR Chinook Salmon ESU (T) -
SRWR Chinook Salmon ESU (E) -
NC Steelhead DPS (T) -
CCC Steelhead DPS (T) -
SCCC Steelhead DPS (T) - **X**
SC Steelhead DPS (E) -
CCV Steelhead DPS (T) -
Eulachon (T) -
sDPS Green Sturgeon (T) -

ESA Anadromous Fish Critical Habitat

SONCC Coho Critical Habitat -

CCC Coho Critical Habitat -
CC Chinook Salmon Critical Habitat -
CVSR Chinook Salmon Critical Habitat -
SRWR Chinook Salmon Critical Habitat -
NC Steelhead Critical Habitat -
CCC Steelhead Critical Habitat -
SCCC Steelhead Critical Habitat - **X**
SC Steelhead Critical Habitat -
CCV Steelhead Critical Habitat -
Eulachon Critical Habitat -
sDPS Green Sturgeon Critical Habitat -

ESA Marine Invertebrates

Range Black Abalone (E) -
Range White Abalone (E) -

ESA Marine Invertebrates Critical Habitat

Black Abalone Critical Habitat -

ESA Sea Turtles

East Pacific Green Sea Turtle (T) -
Olive Ridley Sea Turtle (T/E) -
Leatherback Sea Turtle (E) -
North Pacific Loggerhead Sea Turtle (E) -

ESA Whales

Blue Whale (E) -
Fin Whale (E) -
Humpback Whale (E) -
Southern Resident Killer Whale (E) -
North Pacific Right Whale (E) -
Sei Whale (E) -
Sperm Whale (E) -

ESA Pinnipeds

Guadalupe Fur Seal (T) -
Steller Sea Lion Critical Habitat -

Essential Fish Habitat

Coho EFH -
Chinook Salmon EFH -
Groundfish EFH -
Coastal Pelagics EFH -
Highly Migratory Species EFH -

MMPA Species (See list at left)

ESA and MMPA Cetaceans/Pinnipeds

See list at left and consult the NMFS Long Beach office
562-980-4000

MMPA Cetaceans -
MMPA Pinnipeds -

Quad Name **San Benito**
Quad Number **36121-E1**

ESA Anadromous Fish

SONCC Coho ESU (T) -
CCC Coho ESU (E) -
CC Chinook Salmon ESU (T) -
CVSR Chinook Salmon ESU (T) -
SRWR Chinook Salmon ESU (E) -
NC Steelhead DPS (T) -
CCC Steelhead DPS (T) -
SCCC Steelhead DPS (T) - **X**
SC Steelhead DPS (E) -
CCV Steelhead DPS (T) - **X**
Eulachon (T) -
sDPS Green Sturgeon (T) -

ESA Anadromous Fish Critical Habitat

SONCC Coho Critical Habitat -
CCC Coho Critical Habitat -
CC Chinook Salmon Critical Habitat -
CVSR Chinook Salmon Critical Habitat -
SRWR Chinook Salmon Critical Habitat -
NC Steelhead Critical Habitat -
CCC Steelhead Critical Habitat -
SCCC Steelhead Critical Habitat - **X**
SC Steelhead Critical Habitat -
CCV Steelhead Critical Habitat -
Eulachon Critical Habitat -
sDPS Green Sturgeon Critical Habitat -

ESA Marine Invertebrates

Range Black Abalone (E) -

Range White Abalone (E) -

ESA Marine Invertebrates Critical Habitat

Black Abalone Critical Habitat -

ESA Sea Turtles

East Pacific Green Sea Turtle (T) -

Olive Ridley Sea Turtle (T/E) -

Leatherback Sea Turtle (E) -

North Pacific Loggerhead Sea Turtle (E) -

ESA Whales

Blue Whale (E) -

Fin Whale (E) -

Humpback Whale (E) -

Southern Resident Killer Whale (E) -

North Pacific Right Whale (E) -

Sei Whale (E) -

Sperm Whale (E) -

ESA Pinnipeds

Guadalupe Fur Seal (T) -

Steller Sea Lion Critical Habitat -

Essential Fish Habitat

Coho EFH -

Chinook Salmon EFH -

Groundfish EFH -

Coastal Pelagics EFH -

Highly Migratory Species EFH -

MMPA Species (See list at left)

ESA and MMPA Cetaceans/Pinnipeds

See list at left and consult the NMFS Long Beach office 562-980-4000

MMPA Cetaceans -

MMPA Pinnipeds -

Quad Name **Llanada**

Quad Number **36120-E8**

ESA Anadromous Fish

SONCC Coho ESU (T) -

CCC Coho ESU (E) -
CC Chinook Salmon ESU (T) -
CVSR Chinook Salmon ESU (T) -
SRWR Chinook Salmon ESU (E) -
NC Steelhead DPS (T) -
CCC Steelhead DPS (T) -
SCCC Steelhead DPS (T) - **X**
SC Steelhead DPS (E) -
CCV Steelhead DPS (T) - **X**
Eulachon (T) -
sDPS Green Sturgeon (T) -

ESA Anadromous Fish Critical Habitat

SONCC Coho Critical Habitat -
CCC Coho Critical Habitat -
CC Chinook Salmon Critical Habitat -
CVSR Chinook Salmon Critical Habitat -
SRWR Chinook Salmon Critical Habitat -
NC Steelhead Critical Habitat -
CCC Steelhead Critical Habitat -
SCCC Steelhead Critical Habitat -
SC Steelhead Critical Habitat -
CCV Steelhead Critical Habitat -
Eulachon Critical Habitat -
sDPS Green Sturgeon Critical Habitat -

ESA Marine Invertebrates

Range Black Abalone (E) -
Range White Abalone (E) -

ESA Marine Invertebrates Critical Habitat

Black Abalone Critical Habitat -

ESA Sea Turtles

East Pacific Green Sea Turtle (T) -
Olive Ridley Sea Turtle (T/E) -
Leatherback Sea Turtle (E) -
North Pacific Loggerhead Sea Turtle (E) -

ESA Whales

Blue Whale (E) -
Fin Whale (E) -
Humpback Whale (E) -
Southern Resident Killer Whale (E) -

North Pacific Right Whale (E) -
Sei Whale (E) -
Sperm Whale (E) -

ESA Pinnipeds

Guadalupe Fur Seal (T) -
Steller Sea Lion Critical Habitat -

Essential Fish Habitat

Coho EFH -
Chinook Salmon EFH -
Groundfish EFH -
Coastal Pelagics EFH -
Highly Migratory Species EFH -

MMPA Species (See list at left)

ESA and MMPA Cetaceans/Pinnipeds

See list at left and consult the NMFS Long Beach office
562-980-4000

MMPA Cetaceans -
MMPA Pinnipeds -

Anna Van Zuuk | Biologist/Botanist
ISA Certified Arborist, WE-12612A
LSA | 201 Creekside Ridge Court, Suite 250
Roseville, CA 95678
- - - - - - - - - - - -
916-772-7450 Roseville Office
916-844-2983 Direct Line
530-320-2304 Mobile
Website

SACRAMENTO AREA
SustainableBusiness

Appendix C Wetland Data Sheets

WETLAND DETERMINATION DATA FORM – Arid West Region

Project/Site: Panoche Road Bridge City/County: San Benito Sampling Date: 7/6/2011
Applicant/Owner: San Benito County State: CA Sampling Point: 1
Investigator(s): Mike Trueblood Section, Township, Range: _____
Landform (hillslope, terrace, etc.): _____ Local relief (concave, convex, none): _____ Slope (%): _____
Subregion (LRR): _____ Lat: _____ Long: _____ Datum: _____
Soil Map Unit Name: _____ NWI classification: _____
Are climatic / hydrologic conditions on the site typical for this time of year? Yes ✓ No _____ (If no, explain in Remarks.)
Are Vegetation _____, Soil _____, or Hydrology _____ significantly disturbed? Are "Normal Circumstances" present? Yes ✓ No _____
Are Vegetation _____, Soil _____, or Hydrology _____ naturally problematic? (If needed, explain any answers in Remarks.)

SUMMARY OF FINDINGS – Attach site map showing sampling point locations, transects, important features, etc.

Hydrophytic Vegetation Present?	Yes ✓	No _____
Hydric Soil Present?	Yes ✓	No _____
Wetland Hydrology Present?	Yes ✓	No _____

Is the Sampled Area within a Wetland? Yes ✓ No _____

Remarks:

VEGETATION

Tree Stratum (Use scientific names.)	Absolute % Cover	Dominant Species?	Indicator Status
1. Salix lasiolepis	80%	Yes	FACW
2. Salix exigua	20%	Yes	OBL
3.			
4.			
Total Cover:	100%		
Sapling/Shrub Stratum			
1. Baccharis salicifolia	10%	Yes	FACW
2.			
3.			
4.			
5.			
Total Cover:	10%		
Herb Stratum			
1. Polypogon monspeliensis	10%	No	FACW
2. Cyperus eragrostis	5%	No	FACW
3. Juncus effusus	60%	Yes	OBL
4. Ludwigia peploides	10%	No	OBL
5.			
6.			
7.			
8.			
Total Cover:	85%		
Woody Vine Stratum			
1.			
2.			
Total Cover:			

% Bare Ground in Herb Stratum _____ % Cover of Biotic Crust _____

Dominance Test worksheet:

Number of Dominant Species That Are OBL, FACW, or FAC: 4 (A)

Total Number of Dominant Species Across All Strata: 4 (B)

Percent of Dominant Species That Are OBL, FACW, or FAC: 100% (A/B)

Prevalence Index worksheet:

Total % Cover of:	Multiply by:
OBL species _____	x 1 = _____
FACW species _____	x 2 = _____
FAC species _____	x 3 = _____
FACU species _____	x 4 = _____
UPL species _____	x 5 = _____
Column Totals: _____ (A)	_____ (B)

Prevalence Index = B/A = _____

Hydrophytic Vegetation Indicators:

✓ Dominance Test is >50%
___ Prevalence Index is ≤3.0[1]
___ Morphological Adaptations[1] (Provide supporting data in Remarks or on a separate sheet)
___ Problematic Hydrophytic Vegetation[1] (Explain)

[1]Indicators of hydric soil and wetland hydrology must be present.

Hydrophytic Vegetation Present? Yes ✓ No _____

Remarks:

SOIL

Sampling Point: 1

Profile Description: (Describe to the depth needed to document the indicator or confirm the absence of indicators.)

Depth (inches)	Matrix Color (moist)	Matrix %	Redox Features Color (moist)	Redox Features %	Type[1]	Loc[2]	Texture	Remarks
0–9"	—	—	—					cobble rock / coarse gravel

[1]Type: C=Concentration, D=Depletion, RM=Reduced Matrix. [2]Location: PL=Pore Lining, RC=Root Channel, M=Matrix.

Hydric Soil Indicators: (Applicable to all LRRs, unless otherwise noted.)

- ___ Histosol (A1)
- ___ Histic Epipedon (A2)
- ___ Black Histic (A3)
- ___ Hydrogen Sulfide (A4)
- ___ Stratified Layers (A5) (LRR C)
- ___ 1 cm Muck (A9) (LRR D)
- ___ Depleted Below Dark Surface (A11)
- ___ Thick Dark Surface (A12)
- ___ Sandy Mucky Mineral (S1)
- ___ Sandy Gleyed Matrix (S4)
- ___ Sandy Redox (S5)
- ___ Stripped Matrix (S6)
- ___ Loamy Mucky Mineral (F1)
- ___ Loamy Gleyed Matrix (F2)
- ___ Depleted Matrix (F3)
- ___ Redox Dark Surface (F6)
- ___ Depleted Dark Surface (F7)
- ___ Redox Depressions (F8)
- ___ Vernal Pools (F9)

Indicators for Problematic Hydric Soils[3]:

- ___ 1 cm Muck (A9) (LRR C)
- ___ 2 cm Muck (A10) (LRR B)
- ___ Reduced Vertic (F18)
- ___ Red Parent Material (TF2)
- ✓ Other (Explain in Remarks)

[3]Indicators of hydrophytic vegetation and wetland hydrology must be present.

Restrictive Layer (if present):

Type: ___

Depth (inches): ___

Hydric Soil Present? Yes ✓ No ___

Remarks: cobble/gravel / coarse sand riverbottom no soil color available.

HYDROLOGY

Wetland Hydrology Indicators:

Primary Indicators (any one indicator is sufficient)

- ✓ Surface Water (A1)
- ___ High Water Table (A2)
- ✓ Saturation (A3)
- ___ Water Marks (B1) (Nonriverine)
- ___ Sediment Deposits (B2) (Nonriverine)
- ___ Drift Deposits (B3) (Nonriverine)
- ___ Surface Soil Cracks (B6)
- ___ Inundation Visible on Aerial Imagery (B7)
- ___ Water-Stained Leaves (B9)
- ___ Salt Crust (B11)
- ___ Biotic Crust (B12)
- ___ Aquatic Invertebrates (B13)
- ___ Hydrogen Sulfide Odor (C1)
- ___ Oxidized Rhizospheres along Living Roots (C3)
- ___ Presence of Reduced Iron (C4)
- ___ Recent Iron Reduction in Plowed Soils (C6)
- ___ Other (Explain in Remarks)

Secondary Indicators (2 or more required)

- ___ Water Marks (B1) (Riverine)
- ___ Sediment Deposits (B2) (Riverine)
- ___ Drift Deposits (B3) (Riverine)
- ___ Drainage Patterns (B10)
- ___ Dry-Season Water Table (C2)
- ___ Thin Muck Surface (C7)
- ___ Crayfish Burrows (C8)
- ___ Saturation Visible on Aerial Imagery (C9)
- ___ Shallow Aquitard (D3)
- ___ FAC-Neutral Test (D5)

Field Observations:

Surface Water Present? Yes ✓ No ___ Depth (inches): 6"

Water Table Present? Yes ✓ No ___ Depth (inches): Surface

Saturation Present? (includes capillary fringe) Yes ✓ No ___ Depth (inches): Surface

Wetland Hydrology Present? Yes ✓ No ___

Describe Recorded Data (stream gauge, monitoring well, aerial photos, previous inspections), if available:

Remarks:

WETLAND DETERMINATION DATA FORM – Arid West Region

Project/Site: Panoche Road Bridge City/County: San Benito Sampling Date: 7/6/2011
Applicant/Owner: San Benito County State: CA Sampling Point: 1a
Investigator(s): Mike Trueblood Section, Township, Range: _____
Landform (hillslope, terrace, etc.): _____ Local relief (concave, convex, none): _____ Slope (%): _____
Subregion (LRR): _____ Lat: _____ Long: _____ Datum: _____
Soil Map Unit Name: _____ NWI classification: _____
Are climatic / hydrologic conditions on the site typical for this time of year? Yes ✓ No _____ (If no, explain in Remarks.)
Are Vegetation _____, Soil _____, or Hydrology _____ significantly disturbed? Are "Normal Circumstances" present? Yes ✓ No _____
Are Vegetation _____, Soil _____, or Hydrology _____ naturally problematic? (If needed, explain any answers in Remarks.)

SUMMARY OF FINDINGS – Attach site map showing sampling point locations, transects, important features, etc.

Hydrophytic Vegetation Present?	Yes _____	No ✓	Is the Sampled Area within a Wetland? Yes _____ No ✓
Hydric Soil Present?	Yes _____	No ✓	
Wetland Hydrology Present?	Yes _____	No ✓	

Remarks: upland data point

VEGETATION

Tree Stratum (Use scientific names.)	Absolute % Cover	Dominant Species?	Indicator Status
1.			
2.			
3.			
4.			
Total Cover:			
Sapling/Shrub Stratum			
1. Bucharis pilularis	20%	Yes	UPL
2.			
3.			
4.			
5.			
Total Cover:			
Herb Stratum			
1. Plantago lanceolata	5%	No	FACU
2. Heterocarpa virgata	10%	No	UPL
3. Bromus hordeaceus	30%	Yes	FACU
4. Brassica nigra	10%	No	UPL
5. Avena sativa	20%	Yes	UPL
6.			
7.			
8.			
Total Cover: 75%			
Woody Vine Stratum			
1.			
2.			
Total Cover:			

% Bare Ground in Herb Stratum 10% % Cover of Biotic Crust _____

Dominance Test worksheet:
Number of Dominant Species That Are OBL, FACW, or FAC: 0 (A)
Total Number of Dominant Species Across All Strata: 3 (B)
Percent of Dominant Species That Are OBL, FACW, or FAC: 0% (A/B)

Prevalence Index worksheet:

Total % Cover of:	Multiply by:
OBL species _____	x 1 = _____
FACW species _____	x 2 = _____
FAC species _____	x 3 = _____
FACU species _____	x 4 = _____
UPL species _____	x 5 = _____
Column Totals: _____ (A)	_____ (B)

Prevalence Index = B/A = _____

Hydrophytic Vegetation Indicators:
___ Dominance Test is >50%
___ Prevalence Index is ≤3.0[1]
___ Morphological Adaptations[1] (Provide supporting data in Remarks or on a separate sheet)
___ Problematic Hydrophytic Vegetation[1] (Explain)

[1]Indicators of hydric soil and wetland hydrology must be present.

Hydrophytic Vegetation Present? Yes _____ No ✓

Remarks:

SOIL

Sampling Point: 1a

Profile Description: (Describe to the depth needed to document the indicator or confirm the absence of indicators.)

Depth (inches)	Matrix Color (moist)	Matrix %	Redox Features Color (moist)	Redox %	Type[1]	Loc[2]	Texture	Remarks
0-12"	10YR 3/3	100%	—	—	—			cobbly sandy loam

[1]Type: C=Concentration, D=Depletion, RM=Reduced Matrix. [2]Location: PL=Pore Lining, RC=Root Channel, M=Matrix.

Hydric Soil Indicators: (Applicable to all LRRs, unless otherwise noted.)

- ___ Histosol (A1)
- ___ Histic Epipedon (A2)
- ___ Black Histic (A3)
- ___ Hydrogen Sulfide (A4)
- ___ Stratified Layers (A5) (**LRR C**)
- ___ 1 cm Muck (A9) (**LRR D**)
- ___ Depleted Below Dark Surface (A11)
- ___ Thick Dark Surface (A12)
- ___ Sandy Mucky Mineral (S1)
- ___ Sandy Gleyed Matrix (S4)
- ___ Sandy Redox (S5)
- ___ Stripped Matrix (S6)
- ___ Loamy Mucky Mineral (F1)
- ___ Loamy Gleyed Matrix (F2)
- ___ Depleted Matrix (F3)
- ___ Redox Dark Surface (F6)
- ___ Depleted Dark Surface (F7)
- ___ Redox Depressions (F8)
- ___ Vernal Pools (F9)

Indicators for Problematic Hydric Soils[3]:

- ___ 1 cm Muck (A9) (**LRR C**)
- ___ 2 cm Muck (A10) (**LRR B**)
- ___ Reduced Vertic (F18)
- ___ Red Parent Material (TF2)
- ___ Other (Explain in Remarks)

[3]Indicators of hydrophytic vegetation and wetland hydrology must be present.

Restrictive Layer (if present):

Type: ___

Depth (inches): ___

Hydric Soil Present? Yes ___ No ✓

Remarks: Roadside fill dirt.

HYDROLOGY

Wetland Hydrology Indicators:

Primary Indicators (any one indicator is sufficient)

- ___ Surface Water (A1)
- ___ High Water Table (A2)
- ___ Saturation (A3)
- ___ Water Marks (B1) (**Nonriverine**)
- ___ Sediment Deposits (B2) (**Nonriverine**)
- ___ Drift Deposits (B3) (**Nonriverine**)
- ___ Surface Soil Cracks (B6)
- ___ Inundation Visible on Aerial Imagery (B7)
- ___ Water-Stained Leaves (B9)
- ___ Salt Crust (B11)
- ___ Biotic Crust (B12)
- ___ Aquatic Invertebrates (B13)
- ___ Hydrogen Sulfide Odor (C1)
- ___ Oxidized Rhizospheres along Living Roots (C3)
- ___ Presence of Reduced Iron (C4)
- ___ Recent Iron Reduction in Plowed Soils (C6)
- ___ Other (Explain in Remarks)

Secondary Indicators (2 or more required)

- ___ Water Marks (B1) (**Riverine**)
- ___ Sediment Deposits (B2) (**Riverine**)
- ___ Drift Deposits (B3) (**Riverine**)
- ___ Drainage Patterns (B10)
- ___ Dry-Season Water Table (C2)
- ___ Thin Muck Surface (C7)
- ___ Crayfish Burrows (C8)
- ___ Saturation Visible on Aerial Imagery (C9)
- ___ Shallow Aquitard (D3)
- ___ FAC-Neutral Test (D5)

Field Observations:

Surface Water Present?	Yes ___	No ✓	Depth (inches): —
Water Table Present?	Yes ___	No ✓	Depth (inches): >12"
Saturation Present? (Includes capillary fringe)	Yes ___	No ✓	Depth (inches): >12"

Wetland Hydrology Present? Yes ___ No ✓

Describe Recorded Data (stream gauge, monitoring well, aerial photos, previous inspections), if available:

Remarks:

WETLAND DETERMINATION DATA FORM – Arid West Region

Project/Site: Panoche Road Bridge City/County: San Benito Sampling Date: 7/6/2011
Applicant/Owner: San Benito County State: CA Sampling Point: 3
Investigator(s): Mike Trueblood Section, Township, Range: _____
Landform (hillslope, terrace, etc.): _____ Local relief (concave, convex, none): _____ Slope (%): _____
Subregion (LRR): _____ Lat: _____ Long: _____ Datum: _____
Soil Map Unit Name: _____ NWI classification: _____
Are climatic / hydrologic conditions on the site typical for this time of year? Yes ✓ No _____ (If no, explain in Remarks.)
Are Vegetation _____, Soil _____, or Hydrology _____ significantly disturbed? Are "Normal Circumstances" present? Yes ✓ No _____
Are Vegetation _____, Soil _____, or Hydrology _____ naturally problematic? (If needed, explain any answers in Remarks.)

SUMMARY OF FINDINGS – Attach site map showing sampling point locations, transects, important features, etc.

Hydrophytic Vegetation Present?	Yes ✓	No _____	**Is the Sampled Area within a Wetland?** Yes ✓ No _____
Hydric Soil Present?	Yes ✓	No _____	
Wetland Hydrology Present?	Yes ✓	No _____	

Remarks:

VEGETATION

Tree Stratum (Use scientific names.)	Absolute % Cover	Dominant Species?	Indicator Status
1.			
2.			
3.			
4.			
Total Cover:			
Sapling/Shrub Stratum			
1. Baccharis salicifolia	30%	Yes	FACW
2.			
3.			
4.			
5.			
Total Cover:	30%		
Herb Stratum			
1. Artemesia douglasii	15%	Yes	FACW
2. Melilotus multiflorum	5%	No	FAC
3. Polypogon monspeliensis	10%	Yes	FACW
4.			
5.			
6.			
7.			
8.			
Total Cover:	30%		
Woody Vine Stratum			
1.			
2.			
Total Cover:			

% Bare Ground in Herb Stratum 70% % Cover of Biotic Crust _____

Dominance Test worksheet:

Number of Dominant Species That Are OBL, FACW, or FAC: 3 (A)

Total Number of Dominant Species Across All Strata: 3 (B)

Percent of Dominant Species That Are OBL, FACW, or FAC: 100% (A/B)

Prevalence Index worksheet:

Total % Cover of:		Multiply by:
OBL species		x 1 =
FACW species		x 2 =
FAC species		x 3 =
FACU species		x 4 =
UPL species		x 5 =
Column Totals:	(A)	(B)

Prevalence Index = B/A = _____

Hydrophytic Vegetation Indicators:

✓ Dominance Test is >50%
___ Prevalence Index is ≤3.0[1]
___ Morphological Adaptations[1] (Provide supporting data in Remarks or on a separate sheet)
___ Problematic Hydrophytic Vegetation[1] (Explain)

[1]Indicators of hydric soil and wetland hydrology must be present.

Hydrophytic Vegetation Present? Yes ✓ No _____

Remarks:

SOIL

Sampling Point: 3

Profile Description: (Describe to the depth needed to document the indicator or confirm the absence of indicators.)

Depth (inches)	Matrix Color (moist)	Matrix %	Redox Features Color (moist)	Redox %	Type[1]	Loc[2]	Texture	Remarks
0-12"	10YR 3/2	100%						rubbly Sand

[1]Type: C=Concentration, D=Depletion, RM=Reduced Matrix. [2]Location: PL=Pore Lining, RC=Root Channel, M=Matrix.

Hydric Soil Indicators: (Applicable to all LRRs, unless otherwise noted.)

- ___ Histosol (A1)
- ___ Histic Epipedon (A2)
- ___ Black Histic (A3)
- ___ Hydrogen Sulfide (A4)
- ___ Stratified Layers (A5) (LRR C)
- ___ 1 cm Muck (A9) (LRR D)
- ___ Depleted Below Dark Surface (A11)
- ___ Thick Dark Surface (A12)
- ___ Sandy Mucky Mineral (S1)
- ___ Sandy Gleyed Matrix (S4)
- ___ Sandy Redox (S5)
- ___ Stripped Matrix (S6)
- ___ Loamy Mucky Mineral (F1)
- ___ Loamy Gleyed Matrix (F2)
- ___ Depleted Matrix (F3)
- ___ Redox Dark Surface (F6)
- ___ Depleted Dark Surface (F7)
- ___ Redox Depressions (F8)
- ___ Vernal Pools (F9)

Indicators for Problematic Hydric Soils[3]:

- ___ 1 cm Muck (A9) (LRR C)
- ___ 2 cm Muck (A10) (LRR B)
- ___ Reduced Vertic (F18)
- ___ Red Parent Material (TF2)
- ✓ Other (Explain in Remarks)

[3]Indicators of hydrophytic vegetation and wetland hydrology must be present.

Restrictive Layer (if present):

Type: ___

Depth (inches): ___

Hydric Soil Present? Yes ✓ No ___

Remarks: reduction of soil Chroma compared to adjacent upland datapoint.

HYDROLOGY

Wetland Hydrology Indicators:

Primary Indicators (any one indicator is sufficient)

- ___ Surface Water (A1)
- ___ High Water Table (A2)
- ___ Saturation (A3)
- ✓ Water Marks (B1) (Nonriverine)
- ___ Sediment Deposits (B2) (Nonriverine)
- ✓ Drift Deposits (B3) (Nonriverine)
- ___ Surface Soil Cracks (B6)
- ___ Inundation Visible on Aerial Imagery (B7)
- ___ Water-Stained Leaves (B9)
- ___ Salt Crust (B11)
- ___ Biotic Crust (B12)
- ___ Aquatic Invertebrates (B13)
- ___ Hydrogen Sulfide Odor (C1)
- ___ Oxidized Rhizospheres along Living Roots (C3)
- ___ Presence of Reduced Iron (C4)
- ___ Recent Iron Reduction in Plowed Soils (C6)
- ___ Other (Explain in Remarks)

Secondary Indicators (2 or more required)

- ___ Water Marks (B1) (Riverine)
- ___ Sediment Deposits (B2) (Riverine)
- ___ Drift Deposits (B3) (Riverine)
- ___ Drainage Patterns (B10)
- ___ Dry-Season Water Table (C2)
- ___ Thin Muck Surface (C7)
- ___ Crayfish Burrows (C8)
- ___ Saturation Visible on Aerial Imagery (C9)
- ___ Shallow Aquitard (D3)
- ___ FAC-Neutral Test (D5)

Field Observations:

Surface Water Present? Yes ___ No ✓ Depth (inches): —

Water Table Present? Yes ___ No ✓ Depth (inches): 7/12"

Saturation Present? (includes capillary fringe) Yes ___ No ✓ Depth (inches): 7/12"

Wetland Hydrology Present? Yes ✓ No ___

Describe Recorded Data (stream gauge, monitoring well, aerial photos, previous inspections), if available:

Remarks:

WETLAND DETERMINATION DATA FORM – Arid West Region

Project/Site: Panoche Road Bridge City/County: San Benito Sampling Date: 7/6/2011
Applicant/Owner: San Benito County State: CA Sampling Point: 3a
Investigator(s): Mike Trueblood Section, Township, Range: _____
Landform (hillslope, terrace, etc.): _____ Local relief (concave, convex, none): _____ Slope (%): _____
Subregion (LRR): _____ Lat: _____ Long: _____ Datum: _____
Soil Map Unit Name: _____ NWI classification: _____
Are climatic / hydrologic conditions on the site typical for this time of year? Yes ✓ No _____ (If no, explain in Remarks.)
Are Vegetation _____, Soil _____, or Hydrology _____ significantly disturbed? Are "Normal Circumstances" present? Yes ✓ No _____
Are Vegetation _____, Soil _____, or Hydrology _____ naturally problematic? (If needed, explain any answers in Remarks.)

SUMMARY OF FINDINGS – Attach site map showing sampling point locations, transects, important features, etc.

Hydrophytic Vegetation Present?	Yes _____	No ✓	**Is the Sampled Area within a Wetland?** Yes _____ No ✓
Hydric Soil Present?	Yes _____	No ✓	
Wetland Hydrology Present?	Yes _____	No ✓	

Remarks: upland datapoint

VEGETATION

Tree Stratum (Use scientific names.)	Absolute % Cover	Dominant Species?	Indicator Status
1.			
2.			
3.			
4.			
Total Cover:			
Sapling/Shrub Stratum			
1.			
2.			
3.			
4.			
5.			
Total Cover:			
Herb Stratum			
1. Avena fatua	60%	yes	UPL
2. Bromus diandrus	30%	yes	UPL
3. Carduus psynocephalus	10%	no	Facu
4. Hordeum murinum	10%	no	UPL
5.			
6.			
7.			
8.			
Total Cover: 110%			
Woody Vine Stratum			
1.			
2.			
Total Cover:			

% Bare Ground in Herb Stratum _____ % Cover of Biotic Crust _____

Dominance Test worksheet:
Number of Dominant Species That Are OBL, FACW, or FAC: 0 (A)
Total Number of Dominant Species Across All Strata: 2 (B)
Percent of Dominant Species That Are OBL, FACW, or FAC: 0% (A/B)

Prevalence Index worksheet:

Total % Cover of:		Multiply by:
OBL species		x 1 =
FACW species		x 2 =
FAC species		x 3 =
FACU species		x 4 =
UPL species		x 5 =
Column Totals:	(A)	(B)

Prevalence Index = B/A = _____

Hydrophytic Vegetation Indicators:
___ Dominance Test is >50%
___ Prevalence Index is ≤3.0[1]
___ Morphological Adaptations[1] (Provide supporting data in Remarks or on a separate sheet)
___ Problematic Hydrophytic Vegetation[1] (Explain)

[1]Indicators of hydric soil and wetland hydrology must be present.

Hydrophytic Vegetation Present? Yes _____ No ✓

Remarks:

SOIL

Sampling Point: 3a

Profile Description: (Describe to the depth needed to document the indicator or confirm the absence of indicators.)

Depth (inches)	Matrix Color (moist)	Matrix %	Redox Features Color (moist)	Redox %	Type[1]	Loc[2]	Texture	Remarks
0-13"	10YR3/3	100%						Sandy loam

[1]Type: C=Concentration, D=Depletion, RM=Reduced Matrix. [2]Location: PL=Pore Lining, RC=Root Channel, M=Matrix.

Hydric Soil Indicators: (Applicable to all LRRs, unless otherwise noted.)

- ___ Histosol (A1)
- ___ Histic Epipedon (A2)
- ___ Black Histic (A3)
- ___ Hydrogen Sulfide (A4)
- ___ Stratified Layers (A5) (LRR C)
- ___ 1 cm Muck (A9) (LRR D)
- ___ Depleted Below Dark Surface (A11)
- ___ Thick Dark Surface (A12)
- ___ Sandy Mucky Mineral (S1)
- ___ Sandy Gleyed Matrix (S4)
- ___ Sandy Redox (S5)
- ___ Stripped Matrix (S6)
- ___ Loamy Mucky Mineral (F1)
- ___ Loamy Gleyed Matrix (F2)
- ___ Depleted Matrix (F3)
- ___ Redox Dark Surface (F6)
- ___ Depleted Dark Surface (F7)
- ___ Redox Depressions (F8)
- ___ Vernal Pools (F9)

Indicators for Problematic Hydric Soils[3]:

- ___ 1 cm Muck (A9) (LRR C)
- ___ 2 cm Muck (A10) (LRR B)
- ___ Reduced Vertic (F18)
- ___ Red Parent Material (TF2)
- ___ Other (Explain in Remarks)

[3]Indicators of hydrophytic vegetation and wetland hydrology must be present.

Restrictive Layer (if present):

Type: ___

Depth (inches): ___

Hydric Soil Present? Yes ___ No ✓

Remarks:

HYDROLOGY

Wetland Hydrology Indicators:

Primary Indicators (any one indicator is sufficient)

- ___ Surface Water (A1)
- ___ High Water Table (A2)
- ___ Saturation (A3)
- ___ Water Marks (B1) (Nonriverine)
- ___ Sediment Deposits (B2) (Nonriverine)
- ___ Drift Deposits (B3) (Nonriverine)
- ___ Surface Soil Cracks (B6)
- ___ Inundation Visible on Aerial Imagery (B7)
- ___ Water-Stained Leaves (B9)
- ___ Salt Crust (B11)
- ___ Biotic Crust (B12)
- ___ Aquatic Invertebrates (B13)
- ___ Hydrogen Sulfide Odor (C1)
- ___ Oxidized Rhizospheres along Living Roots (C3)
- ___ Presence of Reduced Iron (C4)
- ___ Recent Iron Reduction in Plowed Soils (C6)
- ___ Other (Explain in Remarks)

Secondary Indicators (2 or more required)

- ___ Water Marks (B1) (Riverine)
- ___ Sediment Deposits (B2) (Riverine)
- ___ Drift Deposits (B3) (Riverine)
- ___ Drainage Patterns (B10)
- ___ Dry-Season Water Table (C2)
- ___ Thin Muck Surface (C7)
- ___ Crayfish Burrows (C8)
- ___ Saturation Visible on Aerial Imagery (C9)
- ___ Shallow Aquitard (D3)
- ___ FAC-Neutral Test (D5)

Field Observations:

Surface Water Present? Yes ___ No ✓ Depth (inches): –

Water Table Present? Yes ___ No ✓ Depth (inches): >13"

Saturation Present? (includes capillary fringe) Yes ___ No ✓ Depth (inches): >13"

Wetland Hydrology Present? Yes ___ No ✓

Describe Recorded Data (stream gauge, monitoring well, aerial photos, previous inspections), if available:

Remarks:

WETLAND DETERMINATION DATA FORM – Arid West Region

Project/Site: Panoche Road Bridge City/County: San Benito Sampling Date: 7/6/2011
Applicant/Owner: San Benito County State: CA Sampling Point: 4
Investigator(s): Mike Trueblood Section, Township, Range: _____
Landform (hillslope, terrace, etc.): _____ Local relief (concave, convex, none): _____ Slope (%): _____
Subregion (LRR): _____ Lat: _____ Long: _____ Datum: _____
Soil Map Unit Name: _____ NWI classification: _____
Are climatic / hydrologic conditions on the site typical for this time of year? Yes ✓ No _____ (If no, explain in Remarks.)
Are Vegetation _____, Soil _____, or Hydrology _____ significantly disturbed? Are "Normal Circumstances" present? Yes ✓ No _____
Are Vegetation _____, Soil _____, or Hydrology _____ naturally problematic? (If needed, explain any answers in Remarks.)

SUMMARY OF FINDINGS – Attach site map showing sampling point locations, transects, important features, etc.

Hydrophytic Vegetation Present?	Yes ✓	No _____	**Is the Sampled Area within a Wetland?** Yes ✓ No _____
Hydric Soil Present?	Yes ✓	No _____	
Wetland Hydrology Present?	Yes ✓	No _____	

Remarks:

VEGETATION

Tree Stratum (Use scientific names.)	Absolute % Cover	Dominant Species?	Indicator Status
1. Salix lasiolepis	60%	Yes	FACW
2.			
3.			
4.			
Total Cover: 60%			
Sapling/Shrub Stratum			
1.			
2.			
3.			
4.			
5.			
Total Cover:			
Herb Stratum			
1. Ludwigia peploides	20%	Yes	OBL
2. Artemesia douglasii	10%	No	FACW
3. Juncus effusus	30%	Yes	OBL
4.			
5.			
6.			
7.			
8.			
Total Cover: 60%			
Woody Vine Stratum			
1.			
2.			
Total Cover:			

% Bare Ground in Herb Stratum _____ % Cover of Biotic Crust _____

Dominance Test worksheet:
Number of Dominant Species That Are OBL, FACW, or FAC: 3 (A)
Total Number of Dominant Species Across All Strata: 3 (B)
Percent of Dominant Species That Are OBL, FACW, or FAC: 100% (A/B)

Prevalence Index worksheet:

Total % Cover of:		Multiply by:
OBL species		x 1 =
FACW species		x 2 =
FAC species		x 3 =
FACU species		x 4 =
UPL species		x 5 =
Column Totals:	(A)	(B)

Prevalence Index = B/A = _____

Hydrophytic Vegetation Indicators:
✓ Dominance Test is >50%
___ Prevalence Index is ≤3.0[1]
___ Morphological Adaptations[1] (Provide supporting data in Remarks or on a separate sheet)
___ Problematic Hydrophytic Vegetation[1] (Explain)

[1]Indicators of hydric soil and wetland hydrology must be present.

Hydrophytic Vegetation Present? Yes ✓ No _____

Remarks:

SOIL

Sampling Point: 4

Profile Description: (Describe to the depth needed to document the indicator or confirm the absence of indicators.)

Depth (inches)	Matrix Color (moist)	Matrix %	Redox Features Color (moist)	Redox %	Type[1]	Loc[2]	Texture	Remarks

[1]Type: C=Concentration, D=Depletion, RM=Reduced Matrix. [2]Location: PL=Pore Lining, RC=Root Channel, M=Matrix.

Hydric Soil Indicators: (Applicable to all LRRs, unless otherwise noted.)

- ___ Histosol (A1)
- ___ Histic Epipedon (A2)
- ___ Black Histic (A3)
- ___ Hydrogen Sulfide (A4)
- ___ Stratified Layers (A5) (LRR C)
- ___ 1 cm Muck (A9) (LRR D)
- ___ Depleted Below Dark Surface (A11)
- ___ Thick Dark Surface (A12)
- ___ Sandy Mucky Mineral (S1)
- ___ Sandy Gleyed Matrix (S4)
- ___ Sandy Redox (S5)
- ___ Stripped Matrix (S6)
- ___ Loamy Mucky Mineral (F1)
- ___ Loamy Gleyed Matrix (F2)
- ___ Depleted Matrix (F3)
- ___ Redox Dark Surface (F6)
- ___ Depleted Dark Surface (F7)
- ___ Redox Depressions (F8)
- ___ Vernal Pools (F9)

Indicators for Problematic Hydric Soils[3]:

- ___ 1 cm Muck (A9) (LRR C)
- ___ 2 cm Muck (A10) (LRR B)
- ___ Reduced Vertic (F18)
- ___ Red Parent Material (TF2)
- ✓ Other (Explain in Remarks)

[3]Indicators of hydrophytic vegetation and wetland hydrology must be present.

Restrictive Layer (if present):

Type: ___

Depth (inches): ___

Hydric Soil Present? Yes ✓ No ___

Remarks: Soil pit not dug - water too deep.

HYDROLOGY

Wetland Hydrology Indicators:

Primary Indicators (any one indicator is sufficient)

- ✓ Surface Water (A1)
- ___ High Water Table (A2)
- ___ Saturation (A3)
- ___ Water Marks (B1) (Nonriverine)
- ___ Sediment Deposits (B2) (Nonriverine)
- ___ Drift Deposits (B3) (Nonriverine)
- ___ Surface Soil Cracks (B6)
- ___ Inundation Visible on Aerial Imagery (B7)
- ___ Water-Stained Leaves (B9)
- ___ Salt Crust (B11)
- ___ Biotic Crust (B12)
- ___ Aquatic Invertebrates (B13)
- ___ Hydrogen Sulfide Odor (C1)
- ___ Oxidized Rhizospheres along Living Roots (C3)
- ___ Presence of Reduced Iron (C4)
- ___ Recent Iron Reduction in Plowed Soils (C6)
- ___ Other (Explain in Remarks)

Secondary Indicators (2 or more required)

- ___ Water Marks (B1) (Riverine)
- ___ Sediment Deposits (B2) (Riverine)
- ___ Drift Deposits (B3) (Riverine)
- ___ Drainage Patterns (B10)
- ___ Dry-Season Water Table (C2)
- ___ Thin Muck Surface (C7)
- ___ Crayfish Burrows (C8)
- ___ Saturation Visible on Aerial Imagery (C9)
- ___ Shallow Aquitard (D3)
- ___ FAC-Neutral Test (D5)

Field Observations:

Surface Water Present? Yes ✓ No ___ Depth (inches): 18"

Water Table Present? Yes ✓ No ___ Depth (inches): Surface

Saturation Present? (includes capillary fringe) Yes ✓ No ___ Depth (inches): Surface

Wetland Hydrology Present? Yes ✓ No ___

Describe Recorded Data (stream gauge, monitoring well, aerial photos, previous inspections), if available:

Remarks:

WETLAND DETERMINATION DATA FORM – Arid West Region

Project/Site: Panoche Road Bridge City/County: San Benito Sampling Date: 7/6/2011
Applicant/Owner: San Benito County State: CA Sampling Point: 4a
Investigator(s): Mike Trueblood Section, Township, Range: _____
Landform (hillslope, terrace, etc.): _____ Local relief (concave, convex, none): _____ Slope (%): _____
Subregion (LRR): _____ Lat: _____ Long: _____ Datum: _____
Soil Map Unit Name: _____ NWI classification: _____
Are climatic / hydrologic conditions on the site typical for this time of year? Yes ✓ No _____ (If no, explain in Remarks.)
Are Vegetation _____, Soil _____, or Hydrology _____ significantly disturbed? Are "Normal Circumstances" present? Yes ✓ No _____
Are Vegetation _____, Soil _____, or Hydrology _____ naturally problematic? (If needed, explain any answers in Remarks.)

SUMMARY OF FINDINGS – Attach site map showing sampling point locations, transects, important features, etc.

Hydrophytic Vegetation Present?	Yes _____	No ✓	Is the Sampled Area within a Wetland? Yes _____ No ✓
Hydric Soil Present?	Yes _____	No ✓	
Wetland Hydrology Present?	Yes _____	No ✓	

Remarks: Upland datapoint

VEGETATION

Tree Stratum (Use scientific names.)	Absolute % Cover	Dominant Species?	Indicator Status
1.			
2.			
3.			
4.			
Total Cover:			
Sapling/Shrub Stratum			
1.			
2.			
3.			
4.			
5.			
Total Cover:			
Herb Stratum			
1. Cynodon dactylon	50%	Yes	FAC
2. Plantago lanceolata	5%	No	FACU
3. Holocarpha virgata	20%	Yes	UPL
4. Bromus hordeaceus	20%	Yes	FACU
5. Brassica nigra	5%	No	UPL
6. Avena Sativa	5%	No	UPL
7.			
8.			
Total Cover: 105%			
Woody Vine Stratum			
1.			
2.			
Total Cover:			

% Bare Ground in Herb Stratum _____ % Cover of Biotic Crust _____

Dominance Test worksheet:
Number of Dominant Species That Are OBL, FACW, or FAC: 1 (A)
Total Number of Dominant Species Across All Strata: 3 (B)
Percent of Dominant Species That Are OBL, FACW, or FAC: 33% (A/B)

Prevalence Index worksheet:

Total % Cover of:		Multiply by:
OBL species		x 1 =
FACW species		x 2 =
FAC species		x 3 =
FACU species		x 4 =
UPL species		x 5 =
Column Totals:	(A)	(B)

Prevalence Index = B/A = _____

Hydrophytic Vegetation Indicators:
__ Dominance Test is >50%
__ Prevalence Index is ≤3.0[1]
__ Morphological Adaptations[1] (Provide supporting data in Remarks or on a separate sheet)
__ Problematic Hydrophytic Vegetation[1] (Explain)

[1]Indicators of hydric soil and wetland hydrology must be present.

Hydrophytic Vegetation Present? Yes _____ No ✓

Remarks:

SOIL

Sampling Point: 4a

Profile Description: (Describe to the depth needed to document the indicator or confirm the absence of indicators.)

Depth (inches)	Matrix Color (moist)	Matrix %	Redox Features Color (moist)	Redox %	Type[1]	Loc[2]	Texture	Remarks
0-6"	7.5YR 3/3	100%						sandy loam

[1]Type: C=Concentration, D=Depletion, RM=Reduced Matrix. [2]Location: PL=Pore Lining, RC=Root Channel, M=Matrix.

Hydric Soil Indicators: (Applicable to all LRRs, unless otherwise noted.)

- ___ Histosol (A1)
- ___ Histic Epipedon (A2)
- ___ Black Histic (A3)
- ___ Hydrogen Sulfide (A4)
- ___ Stratified Layers (A5) (LRR C)
- ___ 1 cm Muck (A9) (LRR D)
- ___ Depleted Below Dark Surface (A11)
- ___ Thick Dark Surface (A12)
- ___ Sandy Mucky Mineral (S1)
- ___ Sandy Gleyed Matrix (S4)
- ___ Sandy Redox (S5)
- ___ Stripped Matrix (S6)
- ___ Loamy Mucky Mineral (F1)
- ___ Loamy Gleyed Matrix (F2)
- ___ Depleted Matrix (F3)
- ___ Redox Dark Surface (F6)
- ___ Depleted Dark Surface (F7)
- ___ Redox Depressions (F8)
- ___ Vernal Pools (F9)

Indicators for Problematic Hydric Soils[3]:

- ___ 1 cm Muck (A9) (LRR C)
- ___ 2 cm Muck (A10) (LRR B)
- ___ Reduced Vertic (F18)
- ___ Red Parent Material (TF2)
- ___ Other (Explain in Remarks)

[3]Indicators of hydrophytic vegetation and wetland hydrology must be present.

Restrictive Layer (if present):

Type: ___

Depth (inches): ___

Hydric Soil Present? Yes ___ No ✓

Remarks:

HYDROLOGY

Wetland Hydrology Indicators:

Primary Indicators (any one indicator is sufficient)

- ___ Surface Water (A1)
- ___ High Water Table (A2)
- ___ Saturation (A3)
- ___ Water Marks (B1) (Nonriverine)
- ___ Sediment Deposits (B2) (Nonriverine)
- ___ Drift Deposits (B3) (Nonriverine)
- ___ Surface Soil Cracks (B6)
- ___ Inundation Visible on Aerial Imagery (B7)
- ___ Water-Stained Leaves (B9)
- ___ Salt Crust (B11)
- ___ Biotic Crust (B12)
- ___ Aquatic Invertebrates (B13)
- ___ Hydrogen Sulfide Odor (C1)
- ___ Oxidized Rhizospheres along Living Roots (C3)
- ___ Presence of Reduced Iron (C4)
- ___ Recent Iron Reduction in Plowed Soils (C6)
- ___ Other (Explain in Remarks)

Secondary Indicators (2 or more required)

- ___ Water Marks (B1) (Riverine)
- ___ Sediment Deposits (B2) (Riverine)
- ___ Drift Deposits (B3) (Riverine)
- ___ Drainage Patterns (B10)
- ___ Dry-Season Water Table (C2)
- ___ Thin Muck Surface (C7)
- ___ Crayfish Burrows (C8)
- ___ Saturation Visible on Aerial Imagery (C9)
- ___ Shallow Aquitard (D3)
- ___ FAC-Neutral Test (D5)

Field Observations:

Surface Water Present? Yes ___ No ✓ Depth (inches): –

Water Table Present? Yes ___ No ✓ Depth (inches): 76"

Saturation Present? (Includes capillary fringe) Yes ___ No ✓ Depth (inches): 76"

Wetland Hydrology Present? Yes ___ No ✓

Describe Recorded Data (stream gauge, monitoring well, aerial photos, previous inspections), if available:

Remarks:

WETLAND DETERMINATION DATA FORM – Arid West Region

Project/Site: Panoche Road Bridge City/County: San Benito Sampling Date: 7/6/2011
Applicant/Owner: San Benito County State: CA Sampling Point: 5
Investigator(s): Mike Trueblood Section, Township, Range: _____
Landform (hillslope, terrace, etc.): _____ Local relief (concave, convex, none): _____ Slope (%): _____
Subregion (LRR): _____ Lat: _____ Long: _____ Datum: _____
Soil Map Unit Name: _____ NWI classification: _____
Are climatic / hydrologic conditions on the site typical for this time of year? Yes ✓ No _____ (If no, explain in Remarks.)
Are Vegetation _____, Soil _____, or Hydrology _____ significantly disturbed? Are "Normal Circumstances" present? Yes ✓ No _____
Are Vegetation _____, Soil _____, or Hydrology _____ naturally problematic? (If needed, explain any answers in Remarks.)

SUMMARY OF FINDINGS – Attach site map showing sampling point locations, transects, important features, etc.

Hydrophytic Vegetation Present?	Yes ✓	No _____	**Is the Sampled Area within a Wetland?** Yes ✓ No _____
Hydric Soil Present?	Yes ✓	No _____	
Wetland Hydrology Present?	Yes ✓	No _____	

Remarks:

VEGETATION

Tree Stratum (Use scientific names.)	Absolute % Cover	Dominant Species?	Indicator Status
1.			
2.			
3.			
4.			
Total Cover:			
Sapling/Shrub Stratum			
1.			
2.			
3.			
4.			
5.			
Total Cover:			
Herb Stratum			
1. Juncus ziphioides	30%	Yes	OBL
2. Lythrum hyssopifolium	30%	Yes	FACW
3. Polypogon monspeliensis	5%	No	FACW
4. Rumex crispus	2%	No	FACW
5. Centum maculatum	10%	No	FACW
6. Juncus bufonius	10%	No	FACW
7. mimulus guttatus	5%	No	OBL
8. Polygonum sp.	10%	No	OBL
Total Cover:	102%		
Woody Vine Stratum			
1.			
2.			
Total Cover:			

% Bare Ground in Herb Stratum _____ % Cover of Biotic Crust _____

Dominance Test worksheet:
Number of Dominant Species That Are OBL, FACW, or FAC: 2 (A)
Total Number of Dominant Species Across All Strata: 2 (B)
Percent of Dominant Species That Are OBL, FACW, or FAC: 100% (A/B)

Prevalence Index worksheet:

Total % Cover of:		Multiply by:
OBL species	_____	x 1 = _____
FACW species	_____	x 2 = _____
FAC species	_____	x 3 = _____
FACU species	_____	x 4 = _____
UPL species	_____	x 5 = _____
Column Totals:	_____ (A)	_____ (B)

Prevalence Index = B/A = _____

Hydrophytic Vegetation Indicators:
✓ Dominance Test is >50%
___ Prevalence Index is ≤3.0[1]
___ Morphological Adaptations[1] (Provide supporting data in Remarks or on a separate sheet)
___ Problematic Hydrophytic Vegetation[1] (Explain)

[1]Indicators of hydric soil and wetland hydrology must be present.

Hydrophytic Vegetation Present? Yes ✓ No _____

Remarks:

SOIL

Sampling Point: 5

Profile Description: (Describe to the depth needed to document the indicator or confirm the absence of indicators.)

Depth (inches)	Matrix Color (moist)	Matrix %	Redox Features Color (moist)	Redox %	Type[1]	Loc[2]	Texture	Remarks
0-12"	10YR 2/1	95%	7.5YR 3/4	5%	C	M		Sandy loam

[1]Type: C=Concentration, D=Depletion, RM=Reduced Matrix. [2]Location: PL=Pore Lining, RC=Root Channel, M=Matrix.

Hydric Soil Indicators: (Applicable to all LRRs, unless otherwise noted.)

- ___ Histosol (A1)
- ___ Histic Epipedon (A2)
- ___ Black Histic (A3)
- ___ Hydrogen Sulfide (A4)
- ___ Stratified Layers (A5) (LRR C)
- ___ 1 cm Muck (A9) (LRR D)
- ___ Depleted Below Dark Surface (A11)
- ___ Thick Dark Surface (A12)
- ___ Sandy Mucky Mineral (S1)
- ___ Sandy Gleyed Matrix (S4)
- ___ Sandy Redox (S5)
- ___ Stripped Matrix (S6)
- ___ Loamy Mucky Mineral (F1)
- ___ Loamy Gleyed Matrix (F2)
- ___ Depleted Matrix (F3)
- ✓ Redox Dark Surface (F6)
- ___ Depleted Dark Surface (F7)
- ___ Redox Depressions (F8)
- ___ Vernal Pools (F9)

Indicators for Problematic Hydric Soils[3]:

- ___ 1 cm Muck (A9) (LRR C)
- ___ 2 cm Muck (A10) (LRR B)
- ___ Reduced Vertic (F18)
- ___ Red Parent Material (TF2)
- ___ Other (Explain in Remarks)

[3]Indicators of hydrophytic vegetation and wetland hydrology must be present.

Restrictive Layer (if present):

Type: ___

Depth (inches): ___

Hydric Soil Present? Yes ✓ No ___

Remarks:

HYDROLOGY

Wetland Hydrology Indicators:

Primary Indicators (any one indicator is sufficient)

- ___ Surface Water (A1)
- ___ High Water Table (A2)
- ✓ Saturation (A3)
- ___ Water Marks (B1) (Nonriverine)
- ___ Sediment Deposits (B2) (Nonriverine)
- ___ Drift Deposits (B3) (Nonriverine)
- ___ Surface Soil Cracks (B6)
- ___ Inundation Visible on Aerial Imagery (B7)
- ___ Water-Stained Leaves (B9)
- ___ Salt Crust (B11)
- ___ Biotic Crust (B12)
- ___ Aquatic Invertebrates (B13)
- ___ Hydrogen Sulfide Odor (C1)
- ___ Oxidized Rhizospheres along Living Roots (C3)
- ___ Presence of Reduced Iron (C4)
- ___ Recent Iron Reduction in Plowed Soils (C6)
- ___ Other (Explain in Remarks)

Secondary Indicators (2 or more required)

- ___ Water Marks (B1) (Riverine)
- ___ Sediment Deposits (B2) (Riverine)
- ___ Drift Deposits (B3) (Riverine)
- ___ Drainage Patterns (B10)
- ___ Dry-Season Water Table (C2)
- ___ Thin Muck Surface (C7)
- ___ Crayfish Burrows (C8)
- ___ Saturation Visible on Aerial Imagery (C9)
- ___ Shallow Aquitard (D3)
- ___ FAC-Neutral Test (D5)

Field Observations:

Surface Water Present? Yes ___ No ✓ Depth (inches): –

Water Table Present? Yes ✓ No ___ Depth (inches): Surface

Saturation Present? (includes capillary fringe) Yes ✓ No ___ Depth (inches): Surface

Wetland Hydrology Present? Yes ✓ No ___

Describe Recorded Data (stream gauge, monitoring well, aerial photos, previous inspections), if available:

Remarks:

WETLAND DETERMINATION DATA FORM – Arid West Region

Project/Site: Panoche Road Bridge City/County: San Benito Sampling Date: 7/6/2011
Applicant/Owner: San Benito County State: CA Sampling Point: 5a
Investigator(s): Mike Trueblood Section, Township, Range: _____
Landform (hillslope, terrace, etc.): _____ Local relief (concave, convex, none): _____ Slope (%): _____
Subregion (LRR): _____ Lat: _____ Long: _____ Datum: _____
Soil Map Unit Name: _____ NWI classification: _____
Are climatic / hydrologic conditions on the site typical for this time of year? Yes ✓ No _____ (If no, explain in Remarks.)
Are Vegetation _____, Soil _____, or Hydrology _____ significantly disturbed? Are "Normal Circumstances" present? Yes ✓ No _____
Are Vegetation _____, Soil _____, or Hydrology _____ naturally problematic? (If needed, explain any answers in Remarks.)

SUMMARY OF FINDINGS – Attach site map showing sampling point locations, transects, important features, etc.

Hydrophytic Vegetation Present?	Yes ✓	No _____	Is the Sampled Area within a Wetland? Yes _____ No ✓
Hydric Soil Present?	Yes _____	No ✓	
Wetland Hydrology Present?	Yes _____	No ✓	

Remarks: Upland Riparian

VEGETATION

Tree Stratum (Use scientific names.)	Absolute % Cover	Dominant Species?	Indicator Status
1. Quercus wislizeni	30%	Yes	UPL
2. Salix lasiolepis	30%	Yes	FACW
3.			
4.			
Total Cover:	60%		
Sapling/Shrub Stratum			
1. Berberis salicifolia	30%	Yes	FACW
2.			
3.			
4.			
5.			
Total Cover:	30%		
Herb Stratum			
1. Urtica dioica	10%	Yes	FACW
2. Conium maculatum	10%	Yes	FACW
3.			
4.			
5.			
6.			
7.			
8.			
Total Cover:	20%		
Woody Vine Stratum			
1.			
2.			
Total Cover:			

% Bare Ground in Herb Stratum _____ % Cover of Biotic Crust _____

Dominance Test worksheet:

Number of Dominant Species That Are OBL, FACW, or FAC: 4 (A)

Total Number of Dominant Species Across All Strata: 5 (B)

Percent of Dominant Species That Are OBL, FACW, or FAC: 80% (A/B)

Prevalence Index worksheet:

Total % Cover of:		Multiply by:
OBL species		x 1 =
FACW species		x 2 =
FAC species		x 3 =
FACU species		x 4 =
UPL species		x 5 =
Column Totals:	(A)	(B)

Prevalence Index = B/A = _____

Hydrophytic Vegetation Indicators:

✓ Dominance Test is >50%
___ Prevalence Index is ≤3.0[1]
___ Morphological Adaptations[1] (Provide supporting data in Remarks or on a separate sheet)
___ Problematic Hydrophytic Vegetation[1] (Explain)

[1]Indicators of hydric soil and wetland hydrology must be present.

Hydrophytic Vegetation Present? Yes ✓ No _____

Remarks:

SOIL

Sampling Point: 5a

Profile Description: (Describe to the depth needed to document the indicator or confirm the absence of indicators.)

Depth (inches)	Matrix Color (moist)	Matrix %	Redox Features Color (moist)	Redox %	Type[1]	Loc[2]	Texture	Remarks
0-14"	10YR 2/2	100%						dark sandy loam

[1]Type: C=Concentration, D=Depletion, RM=Reduced Matrix. [2]Location: PL=Pore Lining, RC=Root Channel, M=Matrix.

Hydric Soil Indicators: (Applicable to all LRRs, unless otherwise noted.)

- ___ Histosol (A1)
- ___ Histic Epipedon (A2)
- ___ Black Histic (A3)
- ___ Hydrogen Sulfide (A4)
- ___ Stratified Layers (A5) (LRR C)
- ___ 1 cm Muck (A9) (LRR D)
- ___ Depleted Below Dark Surface (A11)
- ___ Thick Dark Surface (A12)
- ___ Sandy Mucky Mineral (S1)
- ___ Sandy Gleyed Matrix (S4)
- ___ Sandy Redox (S5)
- ___ Stripped Matrix (S6)
- ___ Loamy Mucky Mineral (F1)
- ___ Loamy Gleyed Matrix (F2)
- ___ Depleted Matrix (F3)
- ___ Redox Dark Surface (F6)
- ___ Depleted Dark Surface (F7)
- ___ Redox Depressions (F8)
- ___ Vernal Pools (F9)

Indicators for Problematic Hydric Soils[3]:

- ___ 1 cm Muck (A9) (LRR C)
- ___ 2 cm Muck (A10) (LRR B)
- ___ Reduced Vertic (F18)
- ___ Red Parent Material (TF2)
- ___ Other (Explain in Remarks)

[3]Indicators of hydrophytic vegetation and wetland hydrology must be present.

Restrictive Layer (if present):

Type: ___

Depth (inches): ___

Hydric Soil Present? Yes ___ No ✓

Remarks:

HYDROLOGY

Wetland Hydrology Indicators:

Primary Indicators (any one indicator is sufficient)

- ___ Surface Water (A1)
- ___ High Water Table (A2)
- ___ Saturation (A3)
- ___ Water Marks (B1) (Nonriverine)
- ___ Sediment Deposits (B2) (Nonriverine)
- ___ Drift Deposits (B3) (Nonriverine)
- ___ Surface Soil Cracks (B6)
- ___ Inundation Visible on Aerial Imagery (B7)
- ___ Water-Stained Leaves (B9)
- ___ Salt Crust (B11)
- ___ Biotic Crust (B12)
- ___ Aquatic Invertebrates (B13)
- ___ Hydrogen Sulfide Odor (C1)
- ___ Oxidized Rhizospheres along Living Roots (C3)
- ___ Presence of Reduced Iron (C4)
- ___ Recent Iron Reduction in Plowed Soils (C6)
- ___ Other (Explain in Remarks)

Secondary Indicators (2 or more required)

- ___ Water Marks (B1) (Riverine)
- ___ Sediment Deposits (B2) (Riverine)
- ___ Drift Deposits (B3) (Riverine)
- ___ Drainage Patterns (B10)
- ___ Dry-Season Water Table (C2)
- ___ Thin Muck Surface (C7)
- ___ Crayfish Burrows (C8)
- ___ Saturation Visible on Aerial Imagery (C9)
- ___ Shallow Aquitard (D3)
- ___ FAC-Neutral Test (D5)

Field Observations:

Surface Water Present? Yes ___ No ✓ Depth (inches): —

Water Table Present? Yes ___ No ✓ Depth (inches): 7-14"

Saturation Present? (includes capillary fringe) Yes ___ No ✓ Depth (inches): 7-14"

Wetland Hydrology Present? Yes ___ No ✓

Describe Recorded Data (stream gauge, monitoring well, aerial photos, previous inspections), if available:

Remarks:

WETLAND DETERMINATION DATA FORM – Arid West Region

Project/Site: PANOCHE ROAD BRIDGE City/County: SAN BENITO Sampling Date: 04/16/2020

Applicant/Owner: SAN BENITO COUNTY State: CA Sampling Point: 6

Investigator(s): A. VAN ZUUK Section, Township, Range: _____

Landform (hillslope, terrace, etc.): _____ Local relief (concave, convex, none): _____ Slope (%): _____

Subregion (LRR): _____ Lat: _____ Long: _____ Datum: _____

Soil Map Unit Name: _____ NWI classification: _____

Are climatic / hydrologic conditions on the site typical for this time of year? Yes ✓ No _____ (If no, explain in Remarks.)

Are Vegetation _____, Soil _____, or Hydrology _____ significantly disturbed? Are "Normal Circumstances" present? Yes ✓ No _____

Are Vegetation _____, Soil _____, or Hydrology _____ naturally problematic? (If needed, explain any answers in Remarks.)

SUMMARY OF FINDINGS – Attach site map showing sampling point locations, transects, important features, etc.

Hydrophytic Vegetation Present?	Yes ✓	No _____	**Is the Sampled Area within a Wetland?** **Yes** ✓ **No** _____
Hydric Soil Present?	Yes ✓	No _____	
Wetland Hydrology Present?	Yes ✓	No _____	

Remarks:

VEGETATION – Use scientific names of plants.

Tree Stratum (Plot size: _____)	Absolute % Cover	Dominant Species?	Indicator Status
1. SALIX LASIOLEPIS	70	Y	FACW
2.			
3.			
4.			
	70 = Total Cover		
Sapling/Shrub Stratum (Plot size: _____)			
1. ROSA CALIFORNICA	20	Y	FAC
2. BACCHARIS SALICIFOLIA	5	N	FAC
3. RIBES CALIFORNICUM	3	N	UPL
4.			
5.			
	28 = Total Cover		
Herb Stratum (Plot size: _____)			
1. PLANTAGO MAJOR	2	N	FAC
2. JUNCUS BALTICUS	35	Y	FACW
3. EPILOBIUM CILIATUM	20	Y	FACW
4. CYNODON DACTYLON	7	N	FACU
5. JUNCUS XIPHIOIDES	15	Y	OBL
6. RUMEX CRISPUS	5	N	FAC
7. NASTURTIUM OFFICINALE	10	N	OBL
8.			
	94 = Total Cover		
Woody Vine Stratum (Plot size: _____)			
1.			
2.			
	_____ = Total Cover		

% Bare Ground in Herb Stratum 10 % Cover of Biotic Crust _____

Dominance Test worksheet:

Number of Dominant Species That Are OBL, FACW, or FAC: 5 (A)

Total Number of Dominant Species Across All Strata: 5 (B)

Percent of Dominant Species That Are OBL, FACW, or FAC: 100 (A/B)

Prevalence Index worksheet:

Total % Cover of:		Multiply by:
OBL species	_____	x 1 = _____
FACW species	_____	x 2 = _____
FAC species	_____	x 3 = _____
FACU species	_____	x 4 = _____
UPL species	_____	x 5 = _____
Column Totals:	_____ (A)	_____ (B)

Prevalence Index = B/A = _____

Hydrophytic Vegetation Indicators:

✓ Dominance Test is >50%

___ Prevalence Index is ≤3.0[1]

___ Morphological Adaptations[1] (Provide supporting data in Remarks or on a separate sheet)

___ Problematic Hydrophytic Vegetation[1] (Explain)

[1]Indicators of hydric soil and wetland hydrology must be present, unless disturbed or problematic.

Hydrophytic Vegetation Present? **Yes** ✓ **No** _____

Remarks:

SOIL

Sampling Point: 6

Profile Description: (Describe to the depth needed to document the indicator or confirm the absence of indicators.)

Depth (inches)	Matrix Color (moist)	Matrix %	Redox Features Color (moist)	Redox %	Type[1]	Loc[2]	Texture	Remarks
0-6"	10YR 3/2	80	7.5YR 4/6	20	C	M	SANDY LOAM	MEDIUM COBBLES
6-10"	WATER	100						

[1]Type: C=Concentration, D=Depletion, RM=Reduced Matrix, CS=Covered or Coated Sand Grains. [2]Location: PL=Pore Lining, M=Matrix.

Hydric Soil Indicators: (Applicable to all LRRs, unless otherwise noted.)

- ___ Histosol (A1)
- ___ Histic Epipedon (A2)
- ___ Black Histic (A3)
- ___ Hydrogen Sulfide (A4)
- ___ Stratified Layers (A5) (**LRR C**)
- ___ 1 cm Muck (A9) (**LRR D**)
- ___ Depleted Below Dark Surface (A11)
- ___ Thick Dark Surface (A12)
- ___ Sandy Mucky Mineral (S1)
- ___ Sandy Gleyed Matrix (S4)
- ___ Sandy Redox (S5)
- ___ Stripped Matrix (S6)
- ___ Loamy Mucky Mineral (F1)
- ___ Loamy Gleyed Matrix (F2)
- ___ Depleted Matrix (F3)
- ___ Redox Dark Surface (F6)
- ___ Depleted Dark Surface (F7)
- ___ Redox Depressions (F8)
- ___ Vernal Pools (F9)

Indicators for Problematic Hydric Soils[3]:

- ___ 1 cm Muck (A9) (**LRR C**)
- ___ 2 cm Muck (A10) (**LRR B**)
- ___ Reduced Vertic (F18)
- ___ Red Parent Material (TF2)
- ___ Other (Explain in Remarks)

[3]Indicators of hydrophytic vegetation and wetland hydrology must be present, unless disturbed or problematic.

Restrictive Layer (if present):

Type: ___

Depth (inches): ___

Hydric Soil Present? Yes ✓ No ___

Remarks:

HYDROLOGY

Wetland Hydrology Indicators:

Primary Indicators (minimum of one required; check all that apply)

- ___ Surface Water (A1)
- ___ High Water Table (A2)
- ✓ Saturation (A3)
- ___ Water Marks (B1) (**Nonriverine**)
- ___ Sediment Deposits (B2) (**Nonriverine**)
- ___ Drift Deposits (B3) (**Nonriverine**)
- ___ Surface Soil Cracks (B6)
- ___ Inundation Visible on Aerial Imagery (B7)
- ✓ Water-Stained Leaves (B9)
- ___ Salt Crust (B11)
- ___ Biotic Crust (B12)
- ___ Aquatic Invertebrates (B13)
- ___ Hydrogen Sulfide Odor (C1)
- ✓ Oxidized Rhizospheres along Living Roots (C3)
- ___ Presence of Reduced Iron (C4)
- ___ Recent Iron Reduction in Tilled Soils (C6)
- ___ Thin Muck Surface (C7)
- ___ Other (Explain in Remarks)

Secondary Indicators (2 or more required)

- ___ Water Marks (B1) (**Riverine**)
- ___ Sediment Deposits (B2) (**Riverine**)
- ✓ Drift Deposits (B3) (**Riverine**)
- ___ Drainage Patterns (B10)
- ___ Dry-Season Water Table (C2)
- ___ Crayfish Burrows (C8)
- ___ Saturation Visible on Aerial Imagery (C9)
- ___ Shallow Aquitard (D3)
- ___ FAC-Neutral Test (D5)

Field Observations:

Surface Water Present? Yes ___ No ✓ Depth (inches): —

Water Table Present? Yes ✓ No ___ Depth (inches): >6"

Saturation Present? (includes capillary fringe) Yes ✓ No ___ Depth (inches): SURFACE

Wetland Hydrology Present? Yes ✓ No ___

Describe Recorded Data (stream gauge, monitoring well, aerial photos, previous inspections), if available:

Remarks:

WETLAND DETERMINATION DATA FORM – Arid West Region

Project/Site: PANOCHE ROAD BRIDGE City/County: SAN BENITO Sampling Date: 04/16/2020

Applicant/Owner: SAN BENITO COUNTY State: CA Sampling Point: 6A

Investigator(s): A. VAN ZUUK Section, Township, Range: _____

Landform (hillslope, terrace, etc.): _____ Local relief (concave, convex, none): _____ Slope (%): _____

Subregion (LRR): _____ Lat: _____ Long: _____ Datum: _____

Soil Map Unit Name: _____ NWI classification: _____

Are climatic / hydrologic conditions on the site typical for this time of year? Yes ✓ No _____ (If no, explain in Remarks.)

Are Vegetation _____, Soil _____, or Hydrology _____ significantly disturbed? Are "Normal Circumstances" present? Yes ✓ No _____

Are Vegetation _____, Soil _____, or Hydrology _____ naturally problematic? (If needed, explain any answers in Remarks.)

SUMMARY OF FINDINGS – Attach site map showing sampling point locations, transects, important features, etc.

Hydrophytic Vegetation Present?	Yes _____	No ✓	**Is the Sampled Area within a Wetland?** Yes _____ No ✓
Hydric Soil Present?	Yes _____	No ✓	
Wetland Hydrology Present?	Yes _____	No ✓	

Remarks: PAIRED UPLAND DATAPOINT.

VEGETATION – Use scientific names of plants.

Tree Stratum (Plot size: _____)	Absolute % Cover	Dominant Species?	Indicator Status
1.			
2.			
3.			
4.			
	_____ = Total Cover		
Sapling/Shrub Stratum (Plot size: _____)			
1.			
2.			
3.			
4.			
5.			
	_____ = Total Cover		
Herb Stratum (Plot size: _____)			
1. BROMUS DIANDRUS	30	Y	UPL
2. BROMUS HORDEACEUS	40	Y	FACU
3. GERANIUM DISSECTUM	20	Y	UPL
4. ERODIUM BOTRYS	9	N	FACU
5. POA BULBOSA	3	N	FACU
6. LUPINUS MICROCARPUS VAR. MICROCARPUS	4	N	UPL
7. AMSINCKIA INTERMEDIA	2	N	UPL
8. HORDEUM MURINUM	7	N	FACU
	115 = Total Cover		
Woody Vine Stratum (Plot size: _____)			
1.			
2.			
	_____ = Total Cover		

% Bare Ground in Herb Stratum _____ % Cover of Biotic Crust _____

Dominance Test worksheet:

Number of Dominant Species That Are OBL, FACW, or FAC: 0 (A)

Total Number of Dominant Species Across All Strata: 3 (B)

Percent of Dominant Species That Are OBL, FACW, or FAC: 0 (A/B)

Prevalence Index worksheet:

Total % Cover of:	Multiply by:
OBL species _____	x 1 = _____
FACW species _____	x 2 = _____
FAC species _____	x 3 = _____
FACU species _____	x 4 = _____
UPL species _____	x 5 = _____
Column Totals: _____ (A)	_____ (B)

Prevalence Index = B/A = _____

Hydrophytic Vegetation Indicators:

___ Dominance Test is >50%

___ Prevalence Index is ≤3.0[1]

___ Morphological Adaptations[1] (Provide supporting data in Remarks or on a separate sheet)

___ Problematic Hydrophytic Vegetation[1] (Explain)

[1]Indicators of hydric soil and wetland hydrology must be present, unless disturbed or problematic.

Hydrophytic Vegetation Present? Yes _____ No ✓

Remarks:

SOIL

Sampling Point: 6A

Profile Description: (Describe to the depth needed to document the indicator or confirm the absence of indicators.)

Depth (inches)	Matrix Color (moist)	Matrix %	Redox Features Color (moist)	Redox %	Type[1]	Loc[2]	Texture	Remarks
0-13"	10YR 3/2	100	—	—	—	—	SANDY LOAM	SMALL COBBLES

[1]Type: C=Concentration, D=Depletion, RM=Reduced Matrix, CS=Covered or Coated Sand Grains. [2]Location: PL=Pore Lining, M=Matrix.

Hydric Soil Indicators: (Applicable to all LRRs, unless otherwise noted.)

- ___ Histosol (A1)
- ___ Histic Epipedon (A2)
- ___ Black Histic (A3)
- ___ Hydrogen Sulfide (A4)
- ___ Stratified Layers (A5) (**LRR C**)
- ___ 1 cm Muck (A9) (**LRR D**)
- ___ Depleted Below Dark Surface (A11)
- ___ Thick Dark Surface (A12)
- ___ Sandy Mucky Mineral (S1)
- ___ Sandy Gleyed Matrix (S4)
- ___ Sandy Redox (S5)
- ___ Stripped Matrix (S6)
- ___ Loamy Mucky Mineral (F1)
- ___ Loamy Gleyed Matrix (F2)
- ___ Depleted Matrix (F3)
- ___ Redox Dark Surface (F6)
- ___ Depleted Dark Surface (F7)
- ___ Redox Depressions (F8)
- ___ Vernal Pools (F9)

Indicators for Problematic Hydric Soils[3]:

- ___ 1 cm Muck (A9) (**LRR C**)
- ___ 2 cm Muck (A10) (**LRR B**)
- ___ Reduced Vertic (F18)
- ___ Red Parent Material (TF2)
- ___ Other (Explain in Remarks)

[3]Indicators of hydrophytic vegetation and wetland hydrology must be present, unless disturbed or problematic.

Restrictive Layer (if present):

Type: _____

Depth (inches): _____

Hydric Soil Present? Yes _____ No ✓

Remarks:

HYDROLOGY

Wetland Hydrology Indicators:

Primary Indicators (minimum of one required; check all that apply)

- ___ Surface Water (A1)
- ___ High Water Table (A2)
- ___ Saturation (A3)
- ___ Water Marks (B1) (**Nonriverine**)
- ___ Sediment Deposits (B2) (**Nonriverine**)
- ___ Drift Deposits (B3) (**Nonriverine**)
- ___ Surface Soil Cracks (B6)
- ___ Inundation Visible on Aerial Imagery (B7)
- ___ Water-Stained Leaves (B9)
- ___ Salt Crust (B11)
- ___ Biotic Crust (B12)
- ___ Aquatic Invertebrates (B13)
- ___ Hydrogen Sulfide Odor (C1)
- ___ Oxidized Rhizospheres along Living Roots (C3)
- ___ Presence of Reduced Iron (C4)
- ___ Recent Iron Reduction in Tilled Soils (C6)
- ___ Thin Muck Surface (C7)
- ___ Other (Explain in Remarks)

Secondary Indicators (2 or more required)

- ___ Water Marks (B1) (**Riverine**)
- ___ Sediment Deposits (B2) (**Riverine**)
- ___ Drift Deposits (B3) (**Riverine**)
- ___ Drainage Patterns (B10)
- ___ Dry-Season Water Table (C2)
- ___ Crayfish Burrows (C8)
- ___ Saturation Visible on Aerial Imagery (C9)
- ___ Shallow Aquitard (D3)
- ___ FAC-Neutral Test (D5)

Field Observations:

Surface Water Present? Yes _____ No ✓ Depth (inches): —

Water Table Present? Yes _____ No ✓ Depth (inches): >13"

Saturation Present? (includes capillary fringe) Yes _____ No ✓ Depth (inches): >13"

Wetland Hydrology Present? Yes _____ No ✓

Describe Recorded Data (stream gauge, monitoring well, aerial photos, previous inspections), if available:

Remarks:

Appendix D Site Assessment for CTS and CRLF

SITE ASSESSMENT FOR CALIFORNIA RED-LEGGED FROG AND CALIFORNIA TIGER SALAMANDER

PANOCHE ROAD BRIDGE (NO. 43C-0070)

REPLACEMENT AT TRES PINOS CREEK

SAN BENITO COUNTY, CALIFORNIA

05-SBT-0-CR

FEDERAL PROJECT NO. BRLS-5943 (056)

Caltrans

August 2011

SITE ASSESSMENT FOR CALIFORNIA RED-LEGGED FROG AND CALIFORNIA TIGER SALAMANDER

PANOCHE ROAD BRIDGE (NO. 43C-0070)

REPLACEMENT AT TRES PINOS CREEK

SAN BENITO COUNTY, CALIFORNIA

05-SBT-0-CR

FEDERAL PROJECT NO. BRLS-5943 (056)

Prepared for:
San Benito County Department of Public Works
3220 Southside Road
Hollister, California 95023

For Submittal to:
U.S. Fish and Wildlife Service
2493 Portola Road, Suite B
Ventura, California 93003

California Department of Fish and Game
Central Region
3196 Higuera Street, Suite A
San Luis Obispo, California 93401

Caltrans

August 2011

TABLE OF CONTENTS

1.0 INTRODUCTION 1
1.1 PURPOSE OF ASSESSMENT 1
1.2 ASSESSMENT AREA 1
1.3 PROJECT DESCRIPTION 4
2.0 ASSESSMENT 5
2.1 REGIONAL STATUS 5
2.2 DOCUMENTED OCCURRENCES 5
2.3 HABITATS ON THE PROJECT SITE AND IN THE VICINITY 7
3.0 RESULTS 11
3.1 CALIFORNIA RED-LEGGED FROG 11
3.2 CALIFORNIA TIGER SALAMANDER 11
4.0 REFERENCES 12

FIGURES

Figure 1: Regional Location 2
Figure 2: Project Vicinity on Topographical Base 3
Figure 3: California Red-Legged Frog and California Tiger Salamander CNDDB Records in the Vicinity of the Project Site 6
Figure 4: Potential California Red-Legged Frog Aquatic Habitat Within 1 Mile of the Project Site 8
Figure 5: Potential California Tiger Salamander Aquatic Habitat Within 1.24 Miles of the Project Site 10

APPENDICES

A: RESUMES FOR LAURA BELT AND MIKE TRUEBLOOD
B: CRLF HABITAT SITE ASSESSMENT DATA SHEETS
C: REPRESENTATIVE PHOTOS OF TRES PINOS CREEK

1.0 INTRODUCTION

1.1 PURPOSE OF ASSESSMENT

This report presents an assessment of the status of the California red-legged frog (*Rana aurora draytonii*), the California tiger salamander (*Ambystoma californiense*), and potential habitat for each species on the Panoche Road Bridge Replacement Project (hereafter, project site) and vicinity. This assessment was prepared by Laura Belt and Mike Trueblood, Biologists with LSA Associates, Inc. (LSA) on behalf of San Benito County Department of Public Works.

This assessment follows the protocols outlined in the United States Fish and Wildlife Service (USFWS) Revised Guidance on Site Assessment and Field Surveys for California Red-legged Frogs (August 2005) and the USFWS Interim Guidance on Conducting Site Assessments and Field Surveys for Determining Presence or a Negative Finding of the California Tiger Salamander (October 2003). Accordingly, for California red-legged frog, this assessment documents the records and describes the habitats occurring on the project site and within 1 mile; for California tiger salamander, this assessment describes the habitats within 1.24 miles of the site and documents the records within 3.1 miles of the project site. The assessment also evaluates the potential for each species to occur on the project site.

1.2 ASSESSMENT AREA

The project site is located in central San Benito County within the Panoche Pass 7.5-minute quadrangle, at the eastern base of the Diablo mountain range, and approximately 25 miles southeast of the City of Hollister. Panoche Road crosses over Tres Pinos Creek (No. 43C-0027) approximately 15 miles southeast of the State Highway 25 (Figures 1 and 2) and will be replaced with a new bridge (No. 43C-0070). Panoche Road generally runs east to west and consists of a graded two-lane asphalt roadway. The existing bridge crossing is a narrow single-lane concrete bridge over Tres Pinos Creek.

The project site lies in a largely undeveloped area among rolling hills within the Tres Pinos Creek watershed. Aquatic features in the general vicinity are composed of small ephemeral drainages as well as several stock ponds. Many of the ephemeral drainages are tributary to Tres Pinos Creek. The dominant plant communities on the project site are willow riparian forest, pasture, and ruderal grassland. Primary land uses in the vicinity are rural residences and pasture.

The project site comprises approximately 3.73 acres and is at an elevation of approximately 1,800 feet. The majority of the land in the area is privately owned and appears to be similar to the project site in use and vegetative characteristics.

FIGURE 1

LEGEND

Project Location

0 2.5 5
MILES

SOURCE: ESRI Imagery (4/2008)

I:\QCE1005A\GIS\ba_fig1-reg_loc.mxd (4/25/12)

Panoche Road Bridge (43C-0070) Replacement
at Tres Pinos Creek
05-SBt-0-CR
Federal Project No. BRLS-5943 (056)

Regional Location

FIGURE 2

LEGEND

Project Location

0 1000 2000
FEET

SOURCE: USGS Topo (Panoche Pass 7.5-Minute Quadrangle)

I:\QCE1005A\GIS\ba_fig2-prj_vic_topo.mxd (4/25/12)

Panoche Road Bridge (43C-0070) Replacement
at Tres Pinos Creek
05-SBt-0-CR
Federal Project No. BRLS-5943 (056)

Project Vicinity on Topographic Base

1.3 PROJECT DESCRIPTION

The Panoche Road Bridge Replacement Project (project) will include replacement of the existing single-lane bridge with a bridge consisting of two 12 foot travel lanes with 4 foot shoulders on both sides. The roadway on both sides of the bridge is two lanes. The project would also include up to 400 feet of approach work on either side of the bridge. The current bridge is 86.94 feet long and 15.75 feet wide. The proposed structure would be approximately 132 feet long with a total bridge deck width of approximately 34 feet on a shifted alignment approximately 50 feet downstream of the existing bridge.

2.0 ASSESSMENT

2.1 REGIONAL STATUS

2.1.1 California Red-Legged Frog

The California red-legged frog historically ranged throughout much of the northern Central Valley and the coast range from San Francisco to northern Baja California, Mexico. The California red-legged frog is now absent from 90 percent of its historical range, but is still locally abundant in portions of the San Francisco Bay and the central coast. San Benito County is located within the current range of the California red-legged frog.

The project site is located within California red-legged frog designated critical habitat Unit SNB-2.

2.1.2 California Tiger Salamander

The California tiger salamander ranges through low grasslands and low foothill regions of Central and Northern California. The species occurs from Sonoma, Colusa, and Yolo Counties south through the Central Valley to Tulare County, and through the Coast Range into Santa Barbara County. An isolated population also occurs in Butte County. San Benito County is located within the current range of the California tiger salamander.

The project site is not located within designated critical habitat for California tiger salamander. The nearest critical habitat is Unit eb-16, which is located approximately 10 miles south of the project site along State Highway 25.

2.2 DOCUMENTED OCCURRENCES

2.2.1 California Red-Legged Frog

LSA searched for records of California red-legged frog in the project vicinity by querying the California Natural Diversity Data Base (CNDDB 2011) referencing the Panoche Pass and surrounding 8 quadrangles. The nearest record of California red-legged frog is 0.15 mile upstream of the project site on Tres Pinos Creek (Figure 3). The habitat consists of the creek limits and an adjacent roadside pond with open riparian shoreline. Although there are no other CNDDB records in this area, this species is well-documented in the Tres Pinos Creek watershed. Figure 3 shows records for California red-legged frog in the vicinity of the project site.

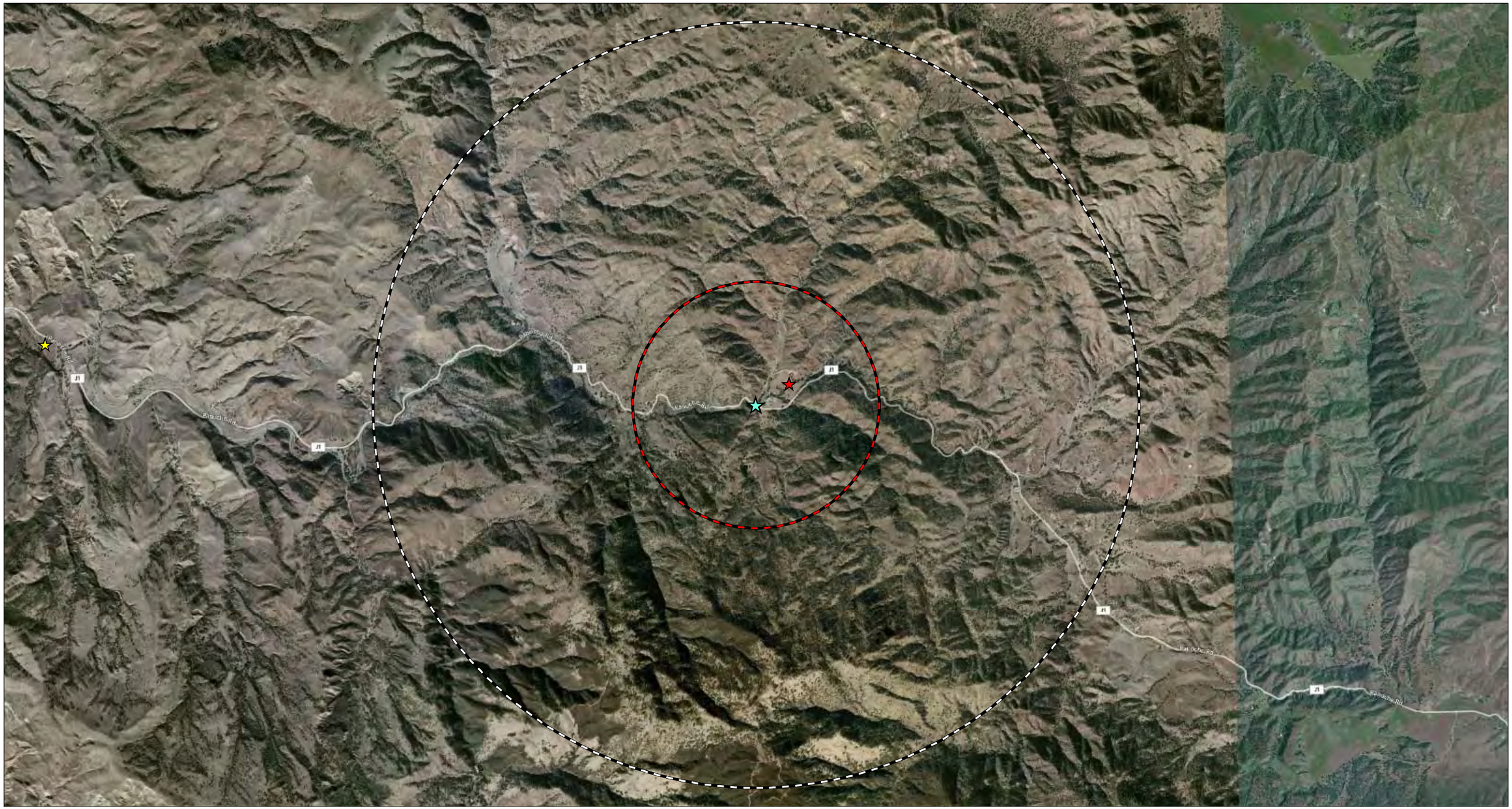

LEGEND

- Project Location
- CRLF 1-Mile Radius
- CTS 3.1-Mile Radius

CNDDB Records (May 2011)

- Ambystoma californiense
- Rana draytonii

0 2000 4000
FEET

SOURCE: ESRI Imagery (2009)

I:\QCE1005A\GIS\fig3-cts-crlf_cnddb.mxd (4/25/12)

FIGURE 3

Panoche Road Bridge (43C-0070) Replacement
at Tres Pinos Creek
05-SBt-0-CR
Federal Project No. BRLS-5943 (056)

CRLF and CTS CNDDB Records
in the Vicinity of the Project Site

2.2.2 California Tiger Salamander

LSA searched for records of California tiger salamander in the project vicinity by querying the California Natural Diversity Data Base (CNDDB 2011) referencing the Panoche Pass and surrounding 8 quadrangles. There are no records of California tiger salamander within 3.1 miles of the project site. The nearest record, dated 2000, is approximately 7.6 miles west of the project site. This record is of an individual California tiger salamander observed along Panoche Road in the vicinity of Tres Pinos Creek. Figure 3 shows records for California tiger salamander in the vicinity of the project site.

2.3 HABITATS ON THE PROJECT SITE AND IN THE VICINITY

LSA biologist Mike Trueblood surveyed the project site and surrounding site vicinity on May 11, 2011. Prior to the survey, aerial photographs of the project site and surrounding lands were reviewed to identify ponds, drainages, and other features that could potentially provide aquatic habitat for California red-legged frog or California tiger salamander. During the survey, LSA biologists surveyed the entire project site, and mapped all suitable aquatic habitats for California red-legged frog or California tiger salamander. Most private lands in the vicinity of the project were inaccessible, but potential habitats for California red-legged frog and California tiger salamander were mapped using an aerial photo.

2.3.1 California Red-Legged Frog - Potential Aquatic Habitat on the Project Site and Within a 1 Mile Radius

California red-legged frogs are considered to be “pond frogs,” adapted to slow moving or still waterbodies such as ponds, pools, and marshes. However, California red-legged frogs also occur in perennial streams. Habitat features typically associated with this species include emergent and overhanging vegetation, and banks containing numerous refugia locations that could conceal adult frogs.

Tres Pinos Creek within the project site supports adequate hydrology and vegetative structure to provide suitable aquatic habitat for California red-legged frogs. It is a perennial creek with pooled areas directly adjacent to the Panoche Road Bridge structure where the water moves at a slower velocity than the rest of the channel. The bed of the live channel is composed of bedrock, rock, cobble, and sand. The edges of the creek have sediment deposited at varying levels; emergent vegetation is fairly dense and grows along the edges and within the live channel. The majority of the canopy cover consists of willow (*Salix* sp.) and a few oaks (*Quercus* sp.); the channel edge and bank are dominated by creeping spike rush (*Eleocharis* sp.), poison oak (*Toxicodendren diversilobum*), California rose (*Rosa californica*), mugwort (*Artemesia* sp.), and other herbaceous vegetation. See the data sheet in Appendix B.

Potential aquatic habitat for California red-legged frog within 1 mile of the project site includes additional reaches of Tres Pinos Creek upstream and downstream of the project site, a few intermittent and ephemeral tributaries, and several stock ponds. The stock ponds appear to be minimally vegetated, though some appear to support overhanging or emergent vegetation. Figure 4 illustrates the distribution of potential aquatic habitat for California red-legged frog on the project site and within a 1 mile radius.

LSA

LEGEND

Project Site

1-Mile Radius

Intermittent and Perennial Streams

Lakes and Ponds

N

0 1000 2000

FEET

SOURCE: ESRI Imagery (2009)

I:\QCE1005A\GIS\fig4_crlf_hab.mxd (4/25/12)

FIGURE 4

Panoche Road Bridge (43C-0070) Replacement
at Tres Pinos Creek
05-SBt-0-CR
Federal Porject No. BRLS-5943 (056)

Potential California Red-Legged Frog
Aquatic Habitat Within 1 Mile of the Project Site

2.3.2 California Tiger Salamander - Potential Aquatic Habitat on the Project Site and Within a 1.24 Mile Radius

The California tiger salamander requires burrows in upland habitat for the majority of the year, in addition to aquatic breeding habitat. Upland habitat favored by this species is generally open grassland or savannahs. California tiger salamanders cannot dig their own burrows and, consequently, are largely dependent on the presence of fossorial mammals such as ground squirrels, though California tiger salamanders can also utilize cracks or crevices in the ground. Breeding habitat consists of natural ephemeral pools, stock ponds, and other small, artificial water bodies, particularly those that dry up in summer.

Tres Pinos Creek is a perennial creek with flows too swift to provide suitable aquatic breeding habitat for the California tiger salamander, even in the slower moving sections of the creek. No other potential aquatic habitat occurs on the project site. Suitable upland habitat is also absent from the project site; though grassland and pasture are present, no suitable burrows or other suitable openings in the ground were observed in the project site.

Several ponds occur within 1.24 miles of the project site that provide potential aquatic habitat for California tiger salamander. Although the ponds are located on private property and were not accessible during the field surveys, review of aerial photos showing these features reveal that several of the ponds within 1.24 miles of the project site are seasonal and could provide suitable aquatic habitat for California tiger salamander. Figure 5 illustrates the distribution of potential aquatic habitat for California tiger salamander within 1.24 miles of the project site.

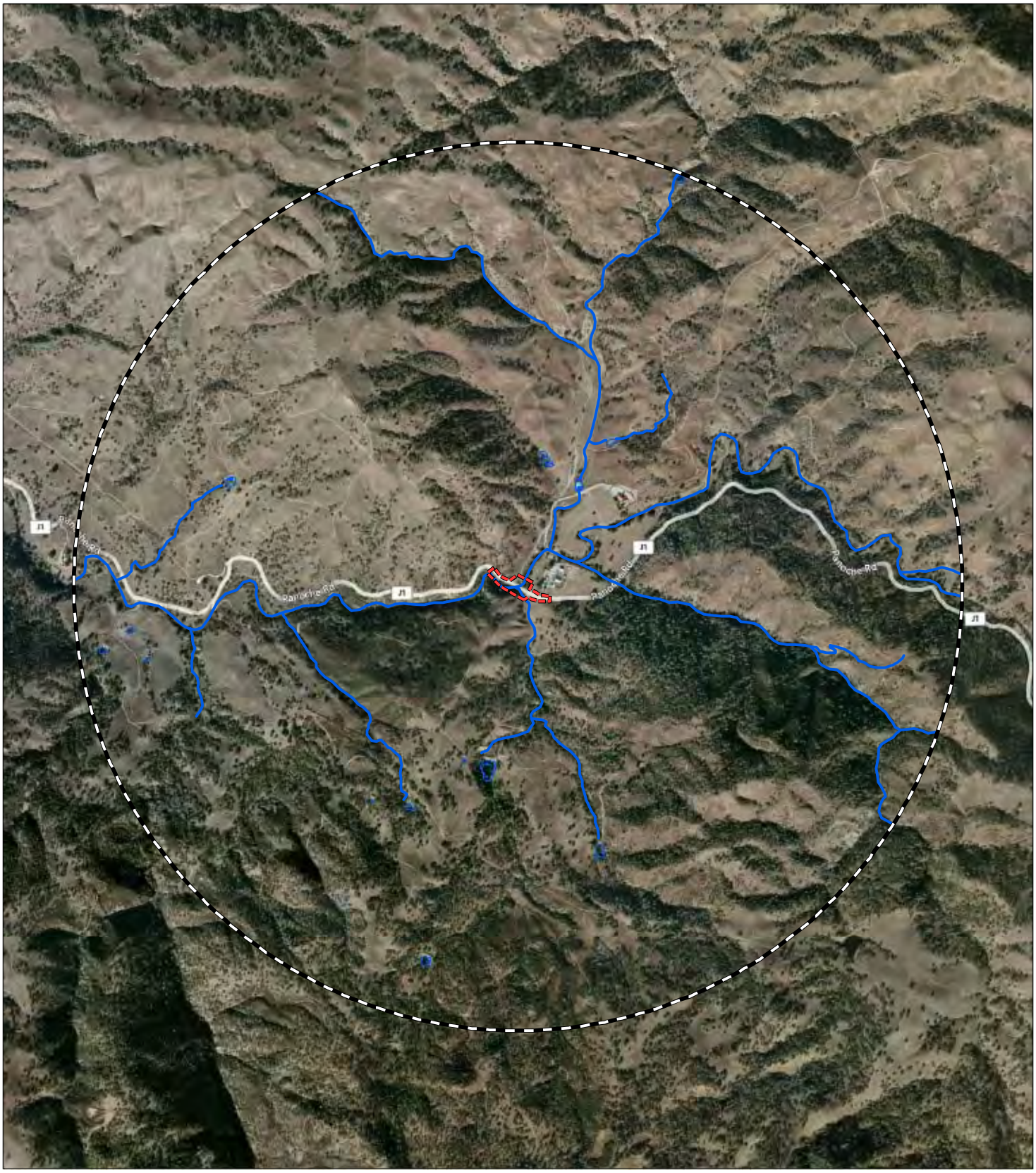

LSA

LEGEND

- Project Site
- 1.24-Mile Radius
- Intermittent and Perennial Streams
- Lakes and Ponds

N

0 1000 2000
FEET

SOURCE: ESRI Imagery (2009)

I:\QCE1005A\GIS\fig5_cts_hab.mxd (4/25/12)

FIGURE 5

Panoche Road Bridge (43C-0070) Replacement
at Tres Pinos Creek
05-SBt-0-CR
Federal Porject No. BRLS-5943 (056)

Potential California Tiger Salammander
Aquatic Habitat Within 1.24 Mile of the Project Site

3.0 RESULTS

3.1 CALIFORNIA RED-LEGGED FROG

The findings of this report are that the California red-legged frogs are potentially present on the project site and in the vicinity based on the following observations:

- The project site is located within the current range of the species;
- There is suitable habitat within the project site for California red-legged frog;
- There are several drainages and ponds in the vicinity of the project site that could provide habitat and a source of migrating individuals;
- There are numerous records of California red-legged frog in the vicinity.

3.2 CALIFORNIA TIGER SALAMANDER

The findings of this report are that California tiger salamanders are not likely to be present on the project site, but may be present in the vicinity based on the following observations:

- Although the project site is located within the current range of the species, there is no suitable aquatic or upland habitat for California tiger salamander on the project site;
- There are no records of California tiger salamander within 3.1 miles of the project site;
- There is potentially suitable aquatic and upland habitat in the vicinity of the project site.

4.0 REFERENCES

California Department of Fish and Game. 2011. Rarefind 3 personal computer program. Sacramento, CA. Records search executed May 3, 2011 and July 19, 2011. Sacramento, California.

Jennings, M. R., and M. P. Hayes. 1994. Amphibian and Reptile Species of Special Concern in California. Final report to the California Dept. of Fish and Game, Inland Fisheries Division, Rancho Cordova. Contract No. 8023.

U.S. Fish and Wildlife Service (USFWS). 2001. Endangered and Threatened Wildlife and Plants; Final Determinations of Critical Habitat for the California Red-legged Frog; Final Rule. March 13, 2001. Federal Register 66:14625-14674.

———. 2002. Recovery Plan for the California Red-legged Frog (*Rana aurora draytonii*). Portland, Oregon. May 2002. 173pp.

———. 2003. *Interim Guidance on Site Assessment and Field Surveys for Determining Presence or a Negative Finding of the California Tiger Salamander*. USFWS, California/Nevada Operations Office, Sacramento, CA and California Department of Fish and Game, Office of the Director, Sacramento, CA.

———. 2004. Endangered and Threatened Wildlife and Plants; Designation of Critical Habitat for the California Tiger Salamander, Central Population; Proposed Rule. *Federal Register* 69: 78570-48649.

———. 2005. *Interim Guidance on Site Assessment and Field Surveys for California Red-legged Frogs*. Sacramento Field Office, Sacramento, CA.

APPENDIX A

RESUMES FOR LAURA BELT AND MIKE TRUEBLOOD

LAURA BELT
WILDLIFE BIOLOGIST

LSA

EXPERTISE

Wildlife Surveys

Sensitive Species Surveys

Biological Construction Monitoring

Environmental Assessment

EDUCATION

California State University, Bakersfield. Bachelor of Science Degree in General Biology, 1989.

PROFESSIONAL AFFILIATIONS

The Wildlife Society

The Audubon Society

PROFESSIONAL RESPONSIBILITIES

Ms. Belt has a diverse background as a wildlife field biologist, which includes 19 years of experience in conducting habitat and wildlife surveys throughout the state. Ms. Belt is responsible for a variety of tasks at LSA, which include biological surveys and construction monitoring of a variety of projects including road work and bridge replacement projects, preparation of biological assessments involving plant and wildlife issues, preparation of 401, 404 and 1600 application material, mitigation plans, and other environmental documentation.

Ms. Belt is also on the Fish and Wildlife Service List of Authorized Individuals to conduct activities with vernal pool tadpole and fairy shrimp and California tiger salamander, as per LSA's Recovery Permit.

Construction monitoring experience includes kit fox, Mojave ground squirrel, western burrowing owl, Swainson's hawk, California red-legged frog, foothill yellow-legged frog, San Francisco garter snake, giant garter snake and valley elderberry longhorn beetle. The following highlights her survey and monitoring experience.

PROJECT EXPERIENCE

Vulcan Sanger Aggregate Mine
Fresno County, California
Conducted preconstruction survey for nesting birds in the limits of the proposed expansion site. Conducted focused surveys for potential VELB habitat, elderberry shrubs (*Sambucus* spp.), in riparian habitat located along the Kings River. Approximately 150 elderberry shrub locations were mapped and stem and exit-hole data was recorded.

River Rock Expansion
Fresno County, California
Conducted preconstruction survey for nesting birds in the limits of the proposed expansion site. Monitored the status of inactive nests in trees via a man –lift (cherry picker).

Academy North On-Call Services
Fresno County, California
Conducted focused survey for western burrowing owl and mapped suitable habitat for California tiger salamander along roadway and right-of-way limits.

PROFESSIONAL EXPERIENCE

Wildlife Biologist, LSA Associates, Inc., Rocklin CA, 2000-Present.

Wildlife Assistant, California Department of Fish and Game, Sacramento CA, 1992-1994, 1999-2000.

Public Relations, San Diego Zoo and Wild Animal Park, 1997-98.

Wildlife Research Assistant, San Diego State Research Foundation, San Diego CA, 1995-1996.

Wildlife Research Assistant, United States Geological Survey, Western Ecological Research Center,

Dixon, CA, and California Department of Fish and Game, Sacramento CA, 1990-94.

PROJECT EXPERIENCE (CONTINUED)

Triangle Rock Products, Inc.
Sacramento County, California
Conducted focused pre-construction surveys for tricolored blackbird and burrowing owl.

- General wildlife surveys, biological reconnaissance survey of proposed project site, and special status species surveys for giant garter snake, Swainson's Hawk, Cooper's Hawk, burrowing owl, white-tailed kite, loggerhead shrike, and northwestern pond turtle.
- Triangle Rock Preserve - Hydrology monitoring and protocol fairy and tadpole shrimp surveying at existing and created vernal pools.

Highway 41 Quarry (Austin Quarry)
Madera County, California
Conducted San Joaquin kit fox and western burrowing owl site assessments for a 300-acre potential quarry site. Mapped and monitored burrowing owls habitat use and movement, before and after the nesting season. Project site also included vernal pools and California tiger salamander habitat.

San Luis Obispo Creek Enhancement Project
San Luis Obispo County, California
Conducted preconstruction and construction monitoring on the San Luis Obispo Creek Enhancement project site, located north of the City of San Luis Obispo and west of Highway 101. Assisted the Department of Fish and Game in capturing steelhead during dewatering activities.

Coast Rock Company
Bradley, San Luis Obispo County, California
Conducted protocol surveys for San Joaquin kit fox and western burrowing owl, as well as pre-construction and construction monitoring for both species. Focused burrow surveys were also conducted for both species using video-scope camera technology.

Potrero Hills Landfill Study Site
Suisun, Solano County, California
Conduct protocol level surveys for vernal pool crustaceans and focused surveys for California tiger salamander, annually.

Wendt Ranch, Dougherty Valley and Discovery Bay Development
Contra Costa County, California
Monitored the location of western burrowing owls and passive relocation activities, prior to clearing and grading.

PROJECT EXPERIENCE (CONTINUED)

Ventura State Highway 118 Corridor Study
Simi Valley, Ventura County, California
Wildlife surveys using camera, video, and scent station tracking to document the use of highway corridors by wildlife, with a focus on bear, mountain lion, deer, coyote, and bobcat.

SR-92/Retaining Wall and Culvert Construction
Half Moon Bay, California
Pre-construction and construction monitoring for California red-legged frog and San Francisco garter snake, within the Pilarcitos Creek Corridor adjacent to SR-92.

SR-101/West of Bayshore and BART Haul Route Restoration San Francisco Airport
San Francisco, California
Preconstruction and construction monitoring for California red-legged frog and San Francisco garter snake, adjacent to the off-ramp lane to the San Francisco Airport.

Cranmore/Garmire Road Bridge Replacement Project
Sutter County California
Pre-construction and construction monitoring for nesting birds, giant garter snake, burrowing owl and Swainson's hawk near the Sacramento River over a construction season.

SR-65/Bypass
Lincoln, Placer County, California
Inventory and map the location of all native trees within the 14 –mile bypass alignment limits. Conduct preconstruction and construction monitoring of work project creating new roadway and 17 bridges. Monitoring tasks include surveying for Swainson's hawks and other nesting birds, before and during the nesting season.

MIKE TRUEBLOOD
BIOLOGIST

LSA

EXPERTISE

Construction Monitoring

Environmental Assessment/ Biological Assessment

Wetland Delineation

Regulatory Permitting

GIS Graphics Design

EDUCATION

University of California at Davis; Davis, CA. B.S. Wildlife, Fish, and Conservation Biology, 2000.

PROFESSIONAL EXPERIENCE

Biologist, LSA Associates, Inc., Rocklin, CA. June 2002-present.

Environmental Analyst, North State Resources, Sacramento, CA. 2001.

Environmental Monitor/Field Coordinator, Jones & Stokes, Sacramento, CA. 2000.

PROFESSIONAL RESPONSIBILITIES

Mr. Trueblood has been a general biologist at LSA since 2002, with an additional 2 years of professional experience prior to LSA, focusing on biological resources, wetland projects, and construction projects throughout the middle sections of California. Mr. Trueblood's background has involved work in a variety of habitats including oak woodland and savannah, riparian woodland, saltwater marsh, freshwater marsh, vernal marsh, coastal sage and desert scrub, chaparral, and grassland.

Mr. Trueblood is responsible for a variety of biological tasks at LSA, which include biological surveys, sensitive species surveys, habitat assessment, wetland delineation, construction monitoring, regulatory permitting, and GIS graphic design. Environmental analyst tasks include preparation of various environmental documents, water resource, and other application material or mitigation plans.

PROJECT EXPERIENCE

Mr. Trueblood has provided biological and/or permitting services for the following selected projects.

Highway 41 Quarry (Austin Quarry)
Madera County, California
Wetland delineation, habitat mapping, and San Joaquin kit fox and western burrowing owl site assessments for a 300-acre potential quarry site.

Academy North On-Call Services
Fresno County, California
Western burrowing owl focused surveys, habitat mapping and California tiger salamander habitat assessment along roadway and right-of-way limits for a road widening project.

State Route 65 Bypass
Lincoln, California
Wetland delineation and verification for project site and mitigation site, vernal pool hydrology monitoring, GIS graphic design, and construction monitoring.

Triangle Rock Vernal Pool and Laguna Creek Enhancement and Maintenance
Sacramento, California
Biological resource monitoring and long-term maintenance for vernal pool and wetland improvement and restoration mitigation for an aggregate mining project.

PROJECT EXPERIENCE (CONTINUED)

Lone Tree Road Bridge/Cienega Road Bridge
Hollister, California
Biological surveys, wetland delineation, California red-legged frog protocol surveys, and regulatory permitting for two bridge replacement projects.

Amargosa Creek Corridor Development
Palmdale, California
Field surveys including tortoise, burrowing owl, and Mojave ground squirrel. Construction monitoring. 2081 take permit applications.

Mid County Parkway
Perris, California
Field surveys including habitat assessment, protocol sensitive plant surveys, and wetland delineation for the Ramona/Cajalco Expressway widening and realignment.

Wise Road Bridge Replacement
Placer County, California
Biological surveys, Red legged Frog protocol surveys. Wetland delineation, regulatory permitting/coordination and construction monitoring for a bridge replacement project.

North Stockton Railroad Grade Separations and Bridge Replacements
Stockton, California
Habitat assessment, Biological surveys, wetland delineation, and regulatory permitting/coordination for three roadway widening and railroad grade separation projects.

404, 1602, and 401 permitting, Various projects.

GIS Graphic Design, Various projects.

APPENDIX B

CRLF HABITAT SITE ASSESSMENT DATA SHEETS

California Red-legged Frog Habitat Site Assessment Data Sheet #1

Site Assessment reviewed by_____ _____
_____
(FWS Field Office) (date) (biologist)

Date of Site Assessment: 05/11/2011
(mm/dd/yyyy)
Site Assessment Biologists: Trueblood, Mike _____
(Last name) (first name) (Last name) (first name)

_____ _____
(Last name) (first name) (Last name) (first name)

Site Location: Panoche Road Bridge at Tres Pinos Creek, San Benito County
(County, General location name, UTM Coordinates or Lat./Long. or T-R-S).

****ATTACH A MAP** (include habitat types, important features, and species locations)**

Proposed project name: **Panoche Road Bridge Replacement Project**
Brief description of proposed action: **Replace the existing single-lane Panoche Road Bridge with a bridge consisting of two 12 foot travel lanes with four foot shoulders on both sides. The project would also include up to 400 feet of approach work on either side of he bridge.**

1) Is this site within the current or historic range of the CRF (circle one)? YES **X** NO

2) Are there known records of CRF within 1.6 km (1 mi) of the site (circle one)? YES **X** NO
If yes, attach a list of all known CRF records with a map showing all locations. *(See Figure 3)*

GENERAL AQUATIC HABITAT CHARACTERIZATION

(if multiple ponds or streams are within the proposed action area, fill out one data sheet for each)

POND:

Size: _____ Maximum depth: _____

Vegetation: emergent, overhanging, dominant species: _____
_____

Substrate: _____
_____

Perennial or Ephemeral *(circle one).* If ephemeral, date it goes dry: _____

California Red-legged Frog Habitat Site Assessment Data Sheet#1

STREAM:

Bank full width: **40 feet (20 to 30 feet average, and 6 to 12 feet in low flow areas)**

Depth at bank full: **1 to 2 feet on average (1 foot in low flow areas)**

Stream gradient: **Shallow**

Are there pools (circle one)?YES **X** NO

If yes,

Size of stream pools: **6 to 12 feet in width by 10 to 12 feet in length**

Maximum depth of stream pools: **2 feet**

Characterize non-pool habitat: run, riffle, glide, other: **Glide and riffle**

Vegetation: emergent, overhanging, dominant species: **Willow, creeping spike rush, poison oak, and mugwort.**

Substrate: **Bedrock, cobble, rocks, and sand**

Bank description: **Edge of creek and top of bank is vegetated.**

Perennial X or Ephemeral *(circle one)*. If ephemeral, date it goes dry: _____

Other aquatic habitat characteristics, species observations, drawings, or comments:

Perennial creek with pooled areas directly adjacent to the Rocks Road Bridge structure where the water moves at a slower velocity than the rest of the channel. The bed of the live channel is composed of bedrock, rock, cobble, and sand. The edges of the creek have sediment deposited at varying levels; emergent vegetation is fairly dense and grows along the edges and within the live water channel. The majority of the canopy cover consists of willow; the channel edge is dominated by creeping spikerush and the banks are dominated by emergent willow, poison oak, California rose, mugwort, and other herbaceous vegetation.

Necessary Attachments:

1. All field notes and other supporting documents
2. Site photographs

Maps with important habitat features and species location

APPENDIX C

REPRESENTATIVE PHOTOS OF TRES PINOS CREEK

Tres Pinos Creek downstream of the existing bridge.

From the low water crossing north of the bridge looking upstream.

Ephemeral tributary to Tres Pinos Creek southeast of the bridge.

Tres Pinos Creek directly under bridge. Frogs observed at this location.

Caltrans

Panoche Road Bridge (43C-0027) Replacement at Tres Pinos Creek
Federal Project No. BRLO-5943(056)

Representative Photos of Tres Pinos Creek

SOURCE: LSA Associates, Inc. 2011

P:\QCE1005A\Graphics\Rep_photos.pdf (7-25-11)

Appendix E Agency Coordination Documentation

Jeff Bray

From: Crystahl Taylor

Sent: Monday, August 22, 2011 3:17 PM

To: Jeff Bray

Cc: Mike Trueblood

Subject: San Benito Projects - Conference Call with USFWS and CDFG

Hi Jeff,

Mike and I just finished talking with Chris Diel and Brandon Sanderson. They were very complimentary of our reports, but do have concerns for Rocks Road and Panoche. Below is a summary of each project and their concerns. Mike, please add to this if needed.

Santa Ana/Fairview

- As long as construction does not go "off alignment" neither Chris nor Brandon have any real concerns regarding CTS.
- Implementation of typical avoidance measures, construction timing, and presence of a biological monitor would be sufficient.
- Consultation not expected.
- Insignificant project impacts.

Panoche Road

- Not as concerned regarding CTS habitat. Implementation of typical avoidance measures, construction timing, and presence of a biological monitor would be sufficient.
- More concerned regarding CRLF and recommend surveys/consultation.
- Mike mentioned that he observed a pond turtle and CRLF tadpoles during jurisdictional delineation.

Rocks Road

- Most concerned with this project of the three discussed.
- Chris questioned if burrows were present within the project site and staging area.
- Project could be dispersal habitat. Not classically defined habitat, but upland habitat may be present within vicinity.
- Brandon plans to conduct a site visit within the next few weeks.
- Implementation of typical avoidance measures, construction timing, and presence of a biological monitor may be sufficient. Brandon will confirm after site visit.

Feel free to let me know if you have any questions. Thank you!

Crystahl Taylor
Senior Environmental Planner
LSA Associates, Inc.
1998 Santa Barbara Street, Suite 120
San Luis Obispo, CA 93401
805.782.0745 phone
805.782.0796 fax
crystahl.taylor@lsa-assoc.com

Please consider the environment before printing this email

Jeff Bray

From: Brandon Sanderson [BSANDERSON@dfg.ca.gov]
Sent: Tuesday, January 03, 2012 3:23 PM
To: Ali Summers
Subject: Panoche Rd Bridge Replacement

Attachments: DFG SJAS Survey Methodologies.pdf

DFG SJAS Survey Methodologies....

Hi Ali,

Hope you had a good holiday. Got your message. After reviewing the project I don't think you'll need to worry about antelope squirrels in the area. They predominantly occur in the Panoche Valley and eastern foothills within k-rat habitat. However, I have attached survey protocol for your future reference. As far as Least Bell's vireo, I don't have information on this area. I would however, make sure that there isn't the potential for Ca tiger salamanders to be in the area. From the CTS site assessment provided in August there doesn't seem to be a concern but the potential may exist.

Thanks,

_____

Brandon Sanderson
Environmental Scientist
Department of Fish & Game
3196 Higuera St., Suite A
San Luis Obispo, CA 93401
805-594-6141
bsanderson@dfg.ca.gov
www.dfg.ca.gov

Jeff Bray

From: Devin Best [devin.best@noaa.gov]
Sent: Monday, January 09, 2012 8:46 AM
To: Ali Summers
Subject: Re: Tres Pinos Creek steelhead

Hi Ali,

To answer your first question, the work window for dewatering follows DFG guidelines and for that area it would be July 15 - October 15. As for the second question, if the county pursued doing an informal consultation, which would not provide take authorization, and fish were present during dewatering events, they could be liable. It would be int the best interest for the county to request a formal consultation to give them the insurance of causing "take" to the species so the project can be implemented. What would help in making the determination is knowing what the site conditions and anticipated flows during the summer period. If the section of creek is typically dry, even in normal or wet years, there may not be any reason to go informal since fish would not likely be present. If you could provide me with the lat/long, I will take a look to give you some guidance.

Thanks,
Devin

Devin Best
Natural Resource Management Specialist
NOAA Fisheries
777 Sonoma Ave.
Santa Rosa, CA 95404
Office: 707.578.8553
Fax: 707.575.3435

On Fri, Jan 6, 2012 at 1:26 PM, Ali Summers <Ali.Summers@lsa-assoc.com> wrote:

> Hi Devin,
>
> Thanks for the information yesterday. I have a couple more questions. Since the project will involve dewatering, what would be the recommended work window for construction, for that area? Second, if the fish are not physically present during construction, would there still be take? My supervisor thinks the county would rather not get take authorization unless they need to, so he wanted to get your opinion on this.
>
> Thanks so much,
>
> *Ali Summers*
> Biologist
>
> LSA Associates, Inc.
> 4200 Rocklin Road, Suite 11B
> Rocklin, CA 95677
> 916-630-4600
> ali.summers@lsa-assoc.com

Mike Trueblood

Subject: FW: Panoche Weir removal of anchor pipes

From: Devin Best - NOAA Federal [mailto:devin.best@noaa.gov]
Sent: Thursday, April 04, 2013 8:01 AM
To: Mike Trueblood
Subject: Re: Panoche Weir removal of anchor pipes

Mike,

From reviewing the attached design, the project looks acceptable. Please let me know if I can be of further assistance.

Thanks,
Devin

On Mon, Apr 1, 2013 at 12:50 PM, Mike Trueblood <Mike.Trueblood@lsa-assoc.com> wrote:

Devin – Per your request, the engineers have removed the anchor pipes from the weir design (see attached). Since they were only included as a redundancy and are not necessary, no further modifications to the weir design were made. Let me know if the design is now acceptable.

Thanks,

Mike Trueblood
Senior Biologist
LSA Associates, Inc.
4200 Rocklin Road, Suite 11B
Rocklin, CA 95677
(916) 630-4600
mike.trueblood@lsa-assoc.com

From: Devin Best - NOAA Federal [mailto:devin.best@noaa.gov]
Sent: Thursday, March 14, 2013 11:21 AM
To: Mike Trueblood
Subject: Re: FW: Panoche RSP Limits and Weir Details

Mike,

I met with our hydraulic engineer to review the design for this project. Using pipe to keep rocks from "walking" is no longer an accepted practice. NMFS encourages applicants and engineers to mimic natural systems as much as possible. There are many design alternatives available and our engineering staff would be willing to offer any assistance needed. Please revise the plans and get back to me with any questions or comments you have.

Thanks,
Devin

On Mon, Mar 11, 2013 at 3:29 PM, Mike Trueblood <Mike.Trueblood@lsa-assoc.com> wrote:

Devin – I spoke to the engineers and asked them to write up something to justify the anchor pipes as part of the weir design. Bottom line is that they were added as a redundancy to meet the property owner's request that the weir would be zero maintenance. See below for the "engineer speak". They can be removed as part of the design if you think it would be prudent. Let me know what you think.
Thanks,

From: Grant Wilcox [mailto:grant_wilcox@wreco.com]
Sent: Monday, March 11, 2013 2:06 PM
To: Mario Quest; Mike Trueblood
Cc: HanBin Liang; Wana Chiu; Carolyn Davis; Edward Heming
Subject: RE: Panoche RSP Limits and Weir Details

Hi Mike,
In summary of our phone conversation concerning the anchor pipes and the weir design, we have the following:

The anchor pipes are redundant and were included because of the landowner's comments concerning creating a maintenance free system. ½ ton should be sufficient to handle the velocities in the stream, but the pipes provide an extra barrier to rocks from "walking" away and creating a more maintenance free system. We would prefer to keep them but if it is a deal breaker with NMFS they can be removed.

I hope this answers your questions and feel free to contact me if you need additional help.

Regards,

Grant

Grant Wilcox, P.E., C.E.G.
Senior Engineer/Project Manager
WRECO
1243 Alpine Road, Suite 108
Walnut Creek, CA 94596
Phone: (925) 941-0017x226
Fax: (925) 941-0018
email: grant_wilcox@wreco.com
Connect with WRECO:

From: Mario Quest [mailto:marioq@quincyeng.com]
Sent: Monday, March 11, 2013 8:19 AM
To: Mike Trueblood; Grant Wilcox
Cc: HanBin Liang; Wana Chiu; Carolyn Davis; Edward Heming (Edward.Heming@lsa-assoc.com)
Subject: RE: Panoche RSP Limits and Weir Details

Hi Mike,

I got your phone message about concerns NMFS has with the weir design. To answer your questions, it might be best for you to call Grant directly at WRECO (925/941-0017 x226) to discuss why the pipe detail was used instead of larger RSP. Apparently this detail has been used before, and the pipes should not become exposed and hazardous to fish. Keep me in the loop. I would like to know how this turns out.

Thank you,

Mario Quest, P.E. | Senior Project Manager | marioq@quincyeng.com
3247 Ramos Circle, Sacramento California 95827
P: 916.368.9181 | F: 916.368.1308 | www.quincyeng.com

Appendix F Representative Photos

Existing Panoche Road Bridge looking northwest. 'S' curve in roadway would be eliminated.

Panoche Road Bridge looking southeast.

Proposed staging area in California annual grassland series north of bridge, looking south.

Low water crossing north of existing bridge, looking northwest.

Source: LSA (11/2020)

Low water crossing north of existing bridge, looking southeast.

Tres Pinos Creek north of bridge, looking southwest.

Tres Pinos Creek south of bridge, looking northeast.

Unnamed ephemeral tributary with mulefat series, looking east.

Confluence of Tres Pinos Creek and unnamed ephemeral tributary south of bridge.

Spring box and pump house north of Panoche Road, east of Tres Pinos Creek, looking northeast.

Mixed oak series south of Panoche Road, looking southeast.

California annual grassland series south of Panoche Road, looking southeast. Mulefat series in background on right.

Appendix G Hydraulic Analysis

1243 Alpine Road, Suite 108
Walnut Creek, CA 94596
Phone: 925.941.0017
Fax: 925.941.0018
www.wreco.com

Memorandum

Date: March 20, 2019

To: Carolyn Davis, Quincy Engineering, Inc.

From: Han-Bin Liang, WRECO

Project: Panoche Road Bridge

Subject: Upstream Channel Bank Protection Analysis

Introduction

Panoche Road at Tres Pinos Creek Bridge Replacement Project (Project) proposes to remove and replace existing Panoche Road bridge over Tres Pinos Creek (Bridge No. 43C0027) with a new longer and wider bridge on an improved roadway alignment.

WRECO's hydraulic analysis of Tres Pinos Creek in the Project vicinity indicated that the proposed Project would result in increased average channel velocities upstream (north) of the bridge (relative to the existing condition). Concerns arose that the increased velocities could negatively affect the soils on the east bank by increasing their erosive potential. The erosion of these soils could in turn have the potential to negatively affect the adjacent spring water box, which is used by the Wattis' Ranch as a water source to capture groundwater from the aquifer.

The purpose of this memorandum is to summarize the velocity differences associated with Tres Pinos Creek for the existing and proposed Project conditions during the 100-year storm, and to size rock slope protection to protect the eastern bank upstream of the proposed bridge. Additional details of the hydraulic analysis are documented in the Project's Bridge Design Hydraulic Study report.

Hydraulic Analysis Velocities

The comparison of the average channel velocities at the cross sections upstream of the Project site are summarized in Table 1.

Table 1. 100-Year Velocity Comparison

River Station	Distance to Proposed Bridge (feet)	Average Channel Velocity (feet per second)	
		Existing	Proposed
1525	225	4.1	6.2
1316	15	3.9	7.1

Based on the hydraulic analysis, the proposed condition would result in an approximately 2 to 3 feet per second increase in average channel velocity at the specified locations. The empirical velocity distributions at the cross sections are included in the appendices. Graphical depictions of the velocity distributions are also included for both the existing and proposed conditions.

1243 Alpine Road, Suite 108
Walnut Creek, CA 94596
Phone: 925.941.0017
Fax: 925.941.0018
www.wreco.com

Recommendations

In order to address the increases in average channel velocity, rock slope protection (RSP) is proposed to be placed at the eastern bank upstream of the existing bridge. RSP generally consists of rocks on channel and structure boundaries to limit the effects of erosion. It is the most common type of scour countermeasure due to its general availability, ease of installation, and relatively low cost. It is assumed that the creek bed and bank would not be excavated for the installation of the RSP countermeasures. The avoidance of excavation would help to minimize potential impacts to the aquifer.

Rock Slope Protection Calculations

Calculations were performed using the results of the hydraulic analysis for the proposed condition to evaluate the size of RSP needed to protect the channel bank from potential erosion. The primary design concern for RSP is to determine the median particle size such that the material will not be displaced during the peak design flows. Calculations were based upon the 100-year storm. The equations from the California Department of Transportation's (Caltrans') Highway Design Manual (HDM) were used to estimate the weight of the RSP required to protect the channel bank (2018). The calculated minimum RSP classes are presented in Table 2. The RSP sizing calculations are included in the appendices.

Table 2. Results of RSP Sizing Analysis

River Station	Distance to Proposed Bridge (feet)	Minimum RSP Sizing
1525	225	Class IV 300 pounds median weight 15 inches median particle diameter
1316	15	Class V 1/4 ton median weight 18 inches median particle diameter

Based on the calculations, the minimum RSP class can transition from Class IV at River Station 1525 to Class V at River Station 1316. Alternatively, Class V RSP can be placed throughout the affected reach, which would provide additional protection and simplicity of installation. According to the HDM, the minimum thickness of the RSP layer needs to be 1.5 times the median particle diameter or the maximum diameter, whichever is greater. A typical cross section recommended by the Federal Highway Administration (FHWA) for mounded toe RSP is shown in Figure 1.

1243 Alpine Road, Suite 108
Walnut Creek, CA 94596
Phone: 925.941.0017
Fax: 925.941.0018
www.wreco.com

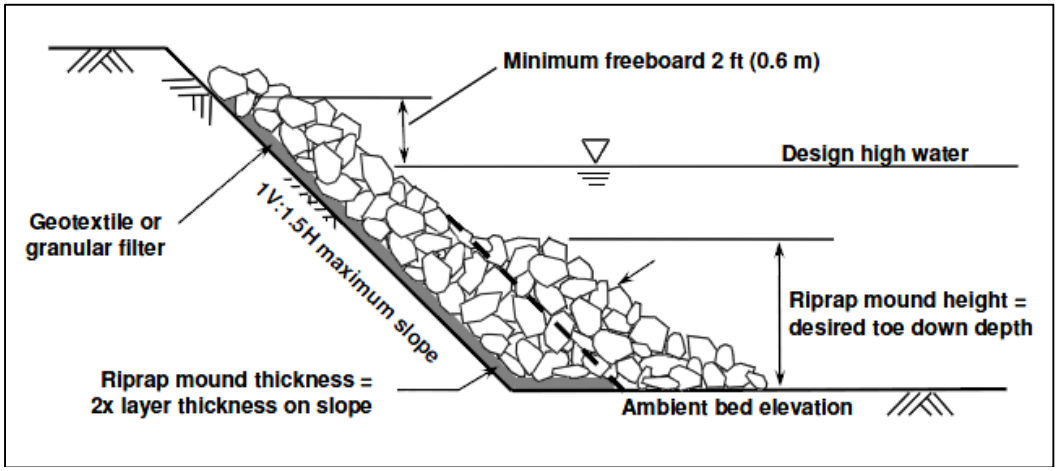

Figure 1. Mounded Toe Typical Cross Section

Source: Federal Highway Administration

The minimum layer thicknesses for the RSP are presented in Table 3.

Table 3. Minimum RSP Layer Thicknesses

Outside Layer		Inside Layer		Total Layer Thickness (ft)
RSP Class	Minimum Layer Thickness (ft)	RSP Class	Minimum Layer Thickness (ft)	
IV	2.5	N/A	N/A	2.5
V	3.0	II	1.5	4.5

The mounded thickness needs to be twice as thick as the layer thickness, which would be 5 ft for the Class IV RSP, and 9 ft for the Class V and Class II RSP system. The mounded height is recommended to be a minimum of 6 ft. The placement method for these classes of RSP is Method B, which involves dumping the rock near its planned location, and working the rock to its final position with machinery. Class 8 RSP geotextile filter fabric should be placed on the bank as a separator material between the RSP and the channel bank.

References

California Department of Transportation. (2018). Highway Design Manual. 6th Edition HDM Change 12/14/18. <http://www.dot.ca.gov/design/manuals/hdm.html> (Last accessed: March 20, 2019).

Federal Highway Administration. (2009). *Bridge Scour and Stream Instability Countermeasures: Experience, Selection, and Design Guidance.* Hydraulic Engineering Circular No. 23. Third Edition.

1243 Alpine Road, Suite 108
Walnut Creek, CA 94596
Phone: 925.941.0017
Fax: 925.941.0018
www.wreco.com

Appendices

- Hydraulic Analysis Empirical Velocity Distributions
- Rock Slope Protection Calculations

At Upstream Cross Section (River Station 1525)

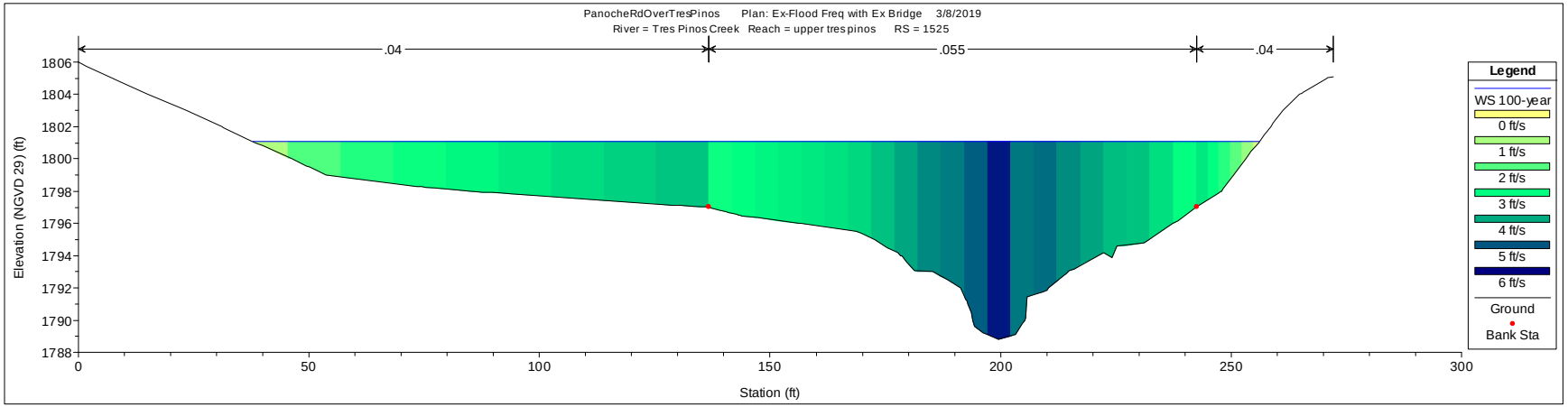

Figure 1. Existing Condition Cross Section

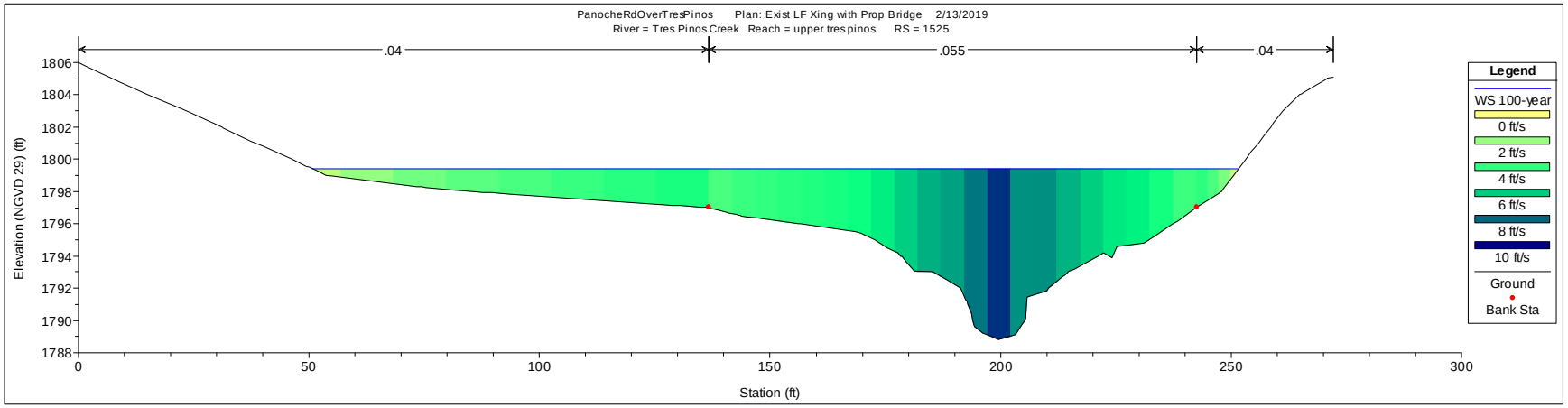

Figure 2. Proposed Condition Cross Section

Table 1. Velocity Comparison at River Station 1525

Segment No.	Left Station (ft)	Right Station (ft)	Velocity (ft/s)		Δ Velocity (ft/s)
			Existing	Proposed	
1	34	46	0.9	N/A	
2	46	57	2.1	1.3	-0.8
3	57	68	2.6	2.1	-0.5
4	68	80	2.9	2.8	-0.1
5	80	91	3.1	3.3	0.2
6	91	103	3.3	3.6	0.4
7	103	114	3.4	3.9	0.5
8	114	125	3.5	4.2	0.7
9	125	137	3.7	4.5	0.9
10	137	142	2.9	3.6	0.7
11	142	147	3.0	3.9	0.9
12	147	152	3.1	4.1	1.0
13	152	157	3.2	4.2	1.1
14	157	162	3.3	4.4	1.1
15	162	167	3.4	4.6	1.2
16	167	172	3.5	4.8	1.3
17	172	177	3.7	5.3	1.6
18	177	182	4.1	6.0	1.9
19	182	187	4.4	6.6	2.2
20	187	192	4.5	6.8	2.3
21	192	197	4.9	7.7	2.8
22	197	202	5.7	9.1	3.3
23	202	207	4.6	7.2	2.6
24	207	212	4.7	7.2	2.5
25	212	217	4.3	6.5	2.1
26	217	222	4.1	6.0	1.9
27	222	227	3.8	5.4	1.7
28	227	232	3.7	5.3	1.6
29	232	237	3.4	4.6	1.3
30	237	242	3.0	3.8	0.9
31	242	245	3.3	4.1	0.9
32	245	247	3.0	3.5	0.6
33	247	250	2.5	2.5	0.0
34	250	252	1.9	1.1	-0.8
35	252	255	1.2	N/A	
36	255	257	0.5	N/A	

At Downstream Cross Section (River Station 1316)

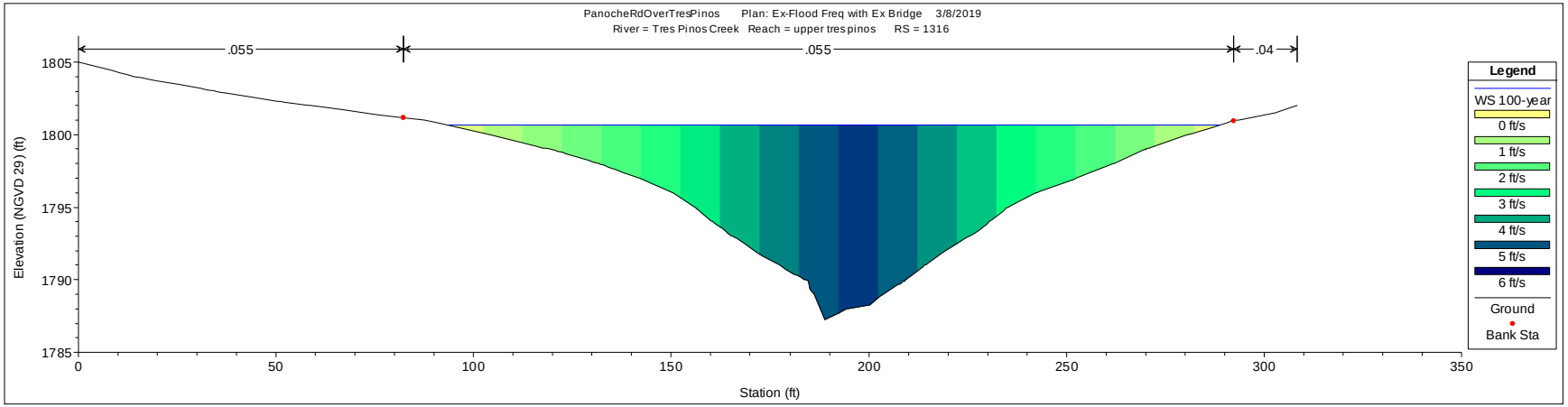

Figure 3. Existing Condition Cross Section

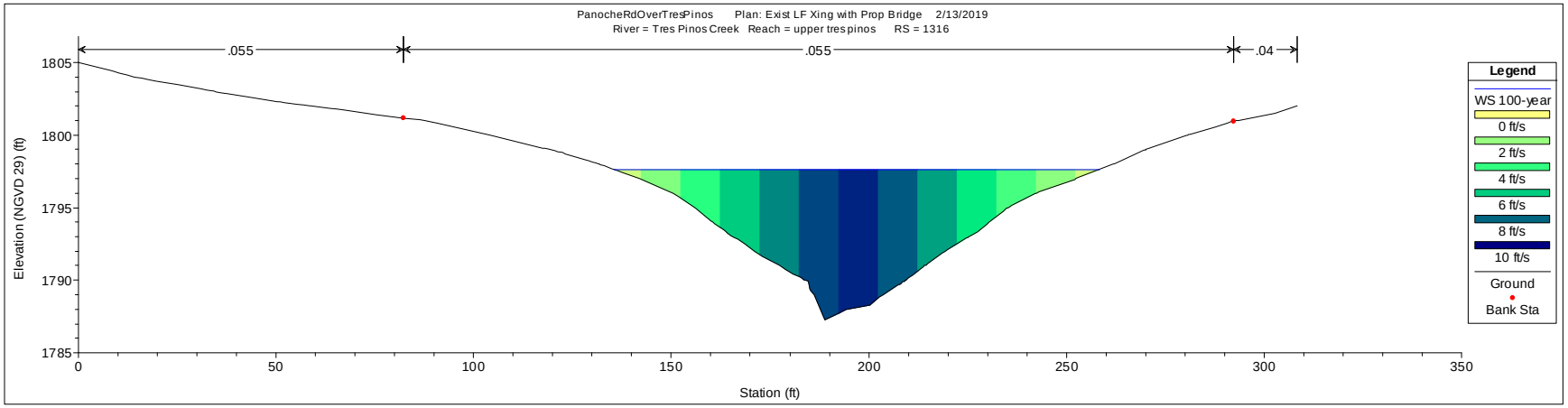

Figure 4. Proposed Condition Cross Section

Table 2. Velocity Comparison at River Station 1316

Segment No.	Left Station (ft)	Right Station (ft)	Velocity (ft/s)		Δ Velocity (ft/s)
			Existing	Proposed	
1	92	102	0.4	N/A	
2	102	112	0.9	N/A	
3	112	122	1.3	N/A	
4	122	132	1.7	N/A	
5	132	142	2.2	1.0	-1.2
6	142	152	2.6	2.4	-0.2
7	152	162	3.2	4.2	1.0
8	162	172	3.9	6.0	2.1
9	172	182	4.5	7.3	2.9
10	182	192	5.0	8.6	3.7
11	192	202	5.3	9.3	4.0
12	202	212	4.9	8.3	3.4
13	212	222	4.3	6.8	2.6
14	222	232	3.7	5.4	1.7
15	232	242	3.0	3.7	0.6
16	242	252	2.6	2.3	-0.3
17	252	262	2.1	1.0	-1.2
18	262	272	1.6	N/A	
19	272	282	1.0	N/A	
20	282	292	0.4	N/A	

Panoche Road Bridge over Tres Pinos Creek
San Benito County, California
Streambank Rock Slope Protection
Calculation guideline from Caltrans Highway Design Manual

Input from HEC-RAS for Proposed Bridge
100-year Flow

Input:

Location along stream:	Upstream	Downstream	
River Station	1525	1316	
V_{avg}	6.2	7.1	ft/s
g	32.2	32.2	ft/s^2
Depth based on	Average	Average	
y	5.4	4.6	ft
S_f	1.1	1.1	
C_s	0.3	0.3	
Cross section location:	Outside of bend	Outside of bend	
C_v	1.25	1.21	

For outside of bends, need R_c and W:

R_c	300	300	ft
W	201	123	ft
C_t	1.0	1.0	
S_g	2.65	2.65	
Type of channel:	Natural	Natural	
V_{des}	10.2	11.0	ft/s
K_1	0.72	0.72	
θ	33.7	33.7	degrees
SS	1.5	1.5	
D_{30}	0.9	1.1	ft
D_{50}	1.1	1.4	ft
D_{50}	13.5	16.4	inches
	IV	V	RSP Class
	300 lb	**1/4 ton**	Median particle weight
	15	**18**	Median particle diameter (inches)

Panoche Road Bridge (No. 43C0027) Replacement at Tres Pinos Creek

Biological Assessment

San Benito County, California

05-SBT-0-CR

Federal Project No. BRLO-5943 (056)

August 2021

CALIFORNIA DEPARTMENT OF TRANSPORTATION

This page intentionally left blank

Biological Assessment

Panoche Road Bridge (No. 43C0027) Replacement at Tres Pinos Creek

San Benito County, California

05-SBT-0-CR

Latitude: 36° 39' 17"

Longitude: 121° 4' 1"

Federal Project No. BRLO-5943 (056)

August 2021

STATE OF CALIFORNIA
Department of Transportation
County of San Benito

Prepared By: _____ Date: 8/6/2021

Anna Van Zuuk, Biologist/Botanist
(916) 844-2983
LSA Associates, Inc.
1504 Eureka Road, Suite 310, Roseville, CA 95661

Submitted By: Steve Loupe
Steve Loupe (Aug 18, 2021 11:39 PDT) Date: Aug 18, 2021

Steve Loupe, County Engineer
(831) 902-2271
San Benito County Department of Public Works
2301 Technology Parkway, Hollister, CA 95023

Recommended For Approved By: Paul Holmes Date: June 8, 2022

Paul Holmes, District Biologist
(805) 549-3422
District 5 Environmental Stewardship Branch
50 Higuera Street, San Luis Obispo, CA 93401

Approved By: Sunny McBride Date: 6/8/2022

Sunny McBride, Branch Chief
(805) 440-9575
District 5 Environmental Stewardship Branch
50 Higuera Street, San Luis Obispo, CA 93401

For individuals with sensory disabilities, this document can be made available in Braille, in large print, on audio cassette, or on computer disk. To obtain a copy in one of these alternative formats, please call or write to Department of Transportation, Attn.: Larry E. Planner, Environmental Planning, 50 Higuera Street, San Luis Obispo, CA 93401; (833) 713-2922 (Voice), or use the California Relay Service 1 (800) 735-2929 (TTY to Voice), 1 (800) 735-2922 (Voice to TTY) or 711.

This page intentionally left blank

Table of Contents

Executive Summary 1
Chapter 1 Introduction 1
1.1 Purpose and Need of the Proposed Action 1
1.2 Species and Critical Habitats Assessed 1
1.2.1 Threatened and Endangered Species 2
1.2.2 Critical Habitat 3
1.2.3 Proposed Species 4
1.2.4 Proposed Critical Habitat 4
1.3 Authorities and Discretion 4
1.3.1 Federal Laws and Regulations 4
1.3.2 State Laws and Regulations 6
1.4 Consultation History 8
1.4.1 Technical Assistance 8
1.4.2 Species Lists 8
1.5 Resource Agency Coordination and Professional Contacts 9
1.6 Study Methods 9
1.6.1 Literature Review 9
1.6.2 Field Surveys 10
1.6.3 Personnel and Survey Dates 11
1.6.4 Limitations and Assumptions That May Influence Results 11
Chapter 2 Proposed Agency Action 14
2.1 Proposed Action Location 14
2.2 Description of Proposed Action 14
2.3 Deconstruct the Proposed Action 25
2.3.1 Construction Scenario Summary 25
2.3.2 Project Operation and Maintenance 29
2.3.3 Sequencing and Schedule 29
2.4 Conservation Measures 30
2.4.1 Project Design Modifications for Avoidance and Minimization 30
2.4.2 Species Specific Conservation Measures – South Central California Coast Steelhead 31
2.4.3 Species Specific Conservation Measures – California Red-Legged Frog . 32
2.5 Compensation 36

Chapter 3 Environmental Baseline 37
3.1 Summary of Environmental Baseline 37
3.2 Description of the Action Area 37
3.2.1 Common Animal Species 41
3.2.2 Aquatic Resources 42
3.2.3 Migration Corridors 45
3.3 Habitat Conditions in the Action Area 45
3.4 Status of Federally-Listed/Proposed Species and Designated Critical Habitat within Action Area 46
3.4.1 Discussion of South Central California Coast Steelhead DPS 46
3.4.2 Discussion of California Red-Legged Frog 47
Chapter 4 Effects of the Action 51
4.1 Stressors from the Action 51
4.1.1 South Central California Coast DPS 51
4.1.2 California Red-Legged Frog 52
4.2 Exposure to Stressors from the Action 53
4.2.1 South Central California Coast DPS 53
4.2.2 California Red-Legged Frog 54
4.3 Response to the Exposure 54
4.3.1 South Central California Coast DPS 54
4.3.2 California Red-Legged Frog 54
4.4 Effects of the Action 55
4.4.1 South Central California Coast DPS 55
4.4.2 California Red-Legged Frog 56
4.5 Cumulative Effects 56
4.6 Determination 60
4.6.1 Species and Critical Habitat Determination 60
Chapter 5 Literature Cited 62
Appendix A NMFS and USFWS Species Lists
Appendix B CRLF and California Tiger Salamander Site Assessment
Appendix C Design Plans
Appendix D Hydraulic Analysis

List of Tables

Table 1. Federally-Listed Species and Critical Habitat Potentially Occurring in the Action Area 3
Table 2. Survey Dates and Personnel 11
Table 3. Impacts to Land Cover Types in the Action Area (acres) 29
Table 4. Native Species Mix 31
Table 5: Natural Communities and Other Vegetation in the Action Area (acres) 38
Table 6. Potential Jurisdictional Waters in the Action Area (acres) 45

List of Figures

Figure 1. Regional Location 17
Figure 2. Action Area on Topographic Base 19
Figure 3. Action Area on Aerial Base 21
Figure 4. Action Area and Project Design 23
Figure 5. Project Impacts and ESA Fencing 27
Figure 6. Natural Communities/Land Uses 39
Figure 7. Potential Jurisdictional Waters 43
Figure 8. Impacts to California Red-Legged Frog Habitat 58

Acronym List

ac	acre(s)
BMP	best management practices
CDFW	California Department of Fish and Wildlife
Caltrans	California Department of Transportation
CDFW	California Department of Fish and Wildlife
CEQA	California Environmental Quality Act
CESA	California Endangered Species Act
CFR	Code of Federal Regulations
CMP	corrugated metal pipe
County	San Benito County
CRLF	California red-legged frog
CTS	California tiger salamander
CWA	Clean Water Act
DPS	Distinct Population Segment
EFH	Essential Fish Habitat
EO	Executive Order
ESA	Environmentally Sensitive Area
FE	Federally listed; Endangered
FESA	Federal Endangered Species Act
FHWA	Federal Highway Administration
ft	foot/feet
HBP	Highway Bridge Program
LSA	LSA Associates, Inc.
MBTA	Migratory Bird Treaty Act
mi	mile(s)
MOU	Memorandum of Understanding
MSFCMA	Magnuson-Stevens Fishery Conservation and Management Act
NEPA	National Environmental Policy Act
NMFS	National Marine Fisheries Service
OHWM	ordinary high water mark
PBF	Physical or Biological Features
RSP	Rock slope protection
RWQCB	Regional Water Quality Control Board
SCCC	South Central California Coast (steelhead)
U.S.	United States
U.S.C.	United States Code
USACE	United States Army Corps of Engineers
USFWS	United States Fish and Wildlife Service
WPCP	Water Pollution Control Program

This page intentionally left blank

Executive Summary

The purpose of this Biological Assessment (BA) is to provide technical information and to review the proposed project in sufficient detail to determine to what extent the proposed project may affect threatened, endangered, or proposed species regulated by the National Marine Fisheries Service (NMFS) and United States Fish and Wildlife Service (USFWS). The California Department of Transportation (Caltrans), as assigned by the Federal Highway Administration (FHWA), has prepared this BA under its assumption of responsibility at 23 United States Code (U.S.C.) 327(a)(2)(A). The BA is also prepared in accordance with 50 Code of Federal Regulations (CFR) 402, legal requirements found in Section 7 (a)(2) of the Endangered Species Act (16 U.S.C. 1536(c)) and with FHWA and Caltrans regulation, policy and guidance. The document presents technical information upon which later decisions regarding project effects are developed.

San Benito County (County), with FHWA funding, and in conjunction with Caltrans, proposes to replace the Panoche Road Bridge (No. 43C0027) over Tres Pinos Creek with a longer and wider bridge (No. 43C0070). The bridge is located in a rural area approximately 25 miles (mi) southeast of Hollister.

The existing one-lane bridge does not meet current design standards for minimum design speed or width. The purpose of the proposed project is to replace the existing bridge with a longer, wider structure, and to shift the location of the new bridge to match a straightened roadway alignment. The new bridge will provide two 12-foot (ft) traffic lanes with adjacent 4-ft shoulders meeting current design standards.

The purpose of the project is to:

- Provide long-term safe vehicular access across Tres Pinos Creek.
- Comply with County, Caltrans, and American Association of State Highway and Transportation Officials design standards for design and construction of the approach roadway and replacement bridge.
- Additional objectives include avoiding or minimizing environmental impacts, reducing right-of-way and land use impacts, meeting ADT requirements, and protecting against bank erosion.

The project is needed because:

- The existing bridge does not meet current standards for design speed, width, and the railing does not match current safety standards.
- To extend the service life of the structure due to the existing bridge’s poor condition.

Activities associated with the proposed Project would include: existing bridge demolition; channel rock slope protection (RSP); approach roadway work; new bridge construction; metal beam guard rail installation; bridge railing installation; temporary traffic control during construction; right-of-way acquisition and temporary construction easements; and utility relocation.

Work will be required in the live channel of Tres Pinos Creek during project construction and will include construction of a support pier, placement of RSP, installation of temporary falsework, and removal of the existing bridge structure. To conduct these activities, a flow diversion (dewatering) will be required. Dewatering will consist of a corrugated metal pipe (CMP) appropriately sized for expected flows to direct the flow of water through the project work area. The CMP will be placed along the low-flow invert of the natural creek and a small earthen berm will be installed at each end of the pipe to direct water into the pipe. Clean sand and gravel will be used at the base of the berm to protect the existing creek channel. Both berms and CMP will be completely removed at the completion of project construction.

Project construction, including removal of the existing bridge and construction of the new bridge, will last for two construction seasons. Work within the live channel of Tres Pinos Creek will be limited to the period of June 15 through October 15.

The Action Area defined for the project comprises 3.66 acres (ac). Undeveloped natural areas within the Action Area consist of Tres Pinos Creek, its associated riparian corridor, and outlying areas. Natural lands in the Action Area include: California annual grassland series, arroyo willow series, mixed oak series, mulefat series, riverine, and riverine wetlands. Natural communities within the Action Area total 3.02 ac. One other vegetation community not considered natural is also present: pasture, totaling 0.01 ac. The remainder of the Action Area, totaling 0.63 ac, consists of developed areas. The area in which the Action Area lies is mainly privately owned and undeveloped; developed areas consist of roads, a concrete low water crossing, and part of a rural residence.

Species listed under the Federal Endangered Species Act (FESA) and regulated by the NMFS and USFWS that could occur in the Action Area include South Central California Coast (SCCC) steelhead (*Oncorhynchus mykiss*) Distinct Population Segment (DPS) and California red-legged frog (*Rana draytonii*) (CRLF). The Action Area falls within designated critical habitat for CRLF.

The project may affect, and is likely to adversely affect SCCC steelhead and CRLF, both federally threatened species. Additionally this project may affect, and is likely to adversely affect CRLF designated critical habitat. This project will have no effect on other federally listed species queried January 27, 2021 in the USFWS Information for Planning and Consultation and NMFS species lists.

No compensatory mitigation is proposed for SCCC steelhead or CRLF with implementation of avoidance and minimization measures included in this document.

Chapter 1 Introduction

1.1 Purpose and Need of the Proposed Action

Panoche Road is classified as a 'Rural Major Collector' with an average daily traffic volume of approximately 150 vehicles. The road is situated roughly east to west, connecting State Route 25 and Interstate 5. Where Panoche Road crosses Tres Pinos Creek, the roadway alignment has a slight "S" curve to accommodate the angle of the bridge crossing and does not meet current design standards for minimum design speed or width. East of the Project site, the condition of Panoche Road degrades, and, consequently, the resulting design speed hinders drivers from using the road as a preferred alternate route to Interstate 5.

The purpose of the proposed project is to replace the bridge with a longer, wider structure, and to shift the location of the new bridge to match a straightened roadway alignment. The new bridge will provide two 12-ft traffic lanes with adjacent 4 ft shoulders meeting current design standards.

The purpose of the project is to:

- Provide long-term safe vehicular access across Tres Pinos Creek.
- Comply with County, Caltrans, and American Association of State Highway and Transportation Officials design standards for design and construction of the approach roadway and replacement bridge.
- Additional objectives include avoiding or minimizing environmental impacts, reducing right-of-way and land use impacts, meeting ADT requirements, and protecting against bank erosion.

The project is needed because:

- The existing bridge does not meet current standards for design speed, width, and the railing does not meet current safety standards.
- To extend the service life of the structure due to the existing bridge's poor condition.

1.2 Species and Critical Habitats Assessed

Official species lists were provided by USFWS and NMFS on January 27, 2021 for the Action Area of this project (Appendix A). The listed and proposed species and/or designated or proposed critical habitats were identified on the updated federal species list and were considered during this analysis. No additional listed species or candidate species are expected to occur within the Action Area.

In order to identify and determine potential effects to federally listed species within and adjacent to the project disturbance limits, an Action Area was established. The Action Area for the proposed project is approximately 3.66 ac and consists of the maximum direct ground disturbance areas plus a buffer to account for potential effects such as noise and vibration that

could occur during construction activities. Appropriately timed focused botanical surveys were conducted for all plant species on the abovementioned lists and habitat assessment surveys were conducted within the Action Area for all special-status animal species.

1.2.1 Threatened and Endangered Species

- Blunt-nosed leopard lizard (*Gambelia sila*) Federally listed; Endangered (FE)
- California Central Valley steelhead (*Oncorhynchus mykiss*) Federally listed; Threatened (FT)
- California condor (*Gymnogyps californianus*) FE
- California red-legged frog (*Rana draytonii*) FT
- Least Bell's vireo (*Vireo bellii pusillus*) FE
- Marsh sandwort (*Arenaria paludicola*) FE
- South Central California coast steelhead (*Oncorhynchus mykiss*) FT
- Southwestern willow flycatcher (*Empidonax traillii extimus*) FE
- Vernal pool fairy shrimp (*Branchinecta lynchi*) FT

One reptile species, blunt-nosed leopard lizard, was identified on the official USFWS species list (USFWS 2021) and is considered absent from the Action Area based on lack of suitable habitat. This species has a very limited distribution on the San Joaquin Valley floor and in the foothills of the Coast Range; all records of this species are from larger valley areas. Therefore, a No Effect determination has been made for this species.

Two fish species, California Central Valley [CCV] steelhead and South Central California Coast [SCCC] steelhead, were identified on the official NOAA Fisheries list (NOAA Fisheries 2021). CCV steelhead occur below natural and manmade impassable barriers from the Sacramento and San Joaquin Rivers and their tributaries; therefore the Action Area is outside the range of this species and a No Effect determination has been made. SCCC steelhead is known to occur intermittently in the reach of Tres Pinos Creek and the species was observed in the Action Area during habitat surveys. Numerous impact avoidance and minimization measures will be implemented to avoid adverse impacts to the population. A May Affect, Likely to Adversely Affect determination has been made for SCCC steelhead.

The following three listed bird species were identified on the USFWS official species list (USFWS 2021): California condor (*Gymnogyps californianus*), least Bell's vireo (*Vireo bellii pusillus*), and southwestern willow flycatcher (*Empidonax traillii extimus*). There is no suitable nesting or foraging habitat for California condor within the Action Area. While riparian scrub/forest habitat marginally suitable for least Bell's vireo and southwestern willow flycatcher is present within the Action Area, the Action Area is not within the known current breeding ranges of these species and these species have not been recorded in the vicinity of the Action Area (CDFW 2021, eBird 2021). Therefore, a No Effect determination has been made for all three listed bird species.

One amphibian species, California red-legged frog (CRLF), was identified on the official USFWS species list (USFWS 2021). This species is well documented within the Tres Pinos Creek watershed and the species was observed within the Action Area during habitat surveys. A May Affect, Likely to Adversely Affect determination has been made for CRLF.

One plant species, Marsh sandwort, was identified on the official USFWS species list (USFWS 2021). This species is considered absent from the Action Area based on the results of focused surveys and the known current ranges of the species. As a result, no project-related effects will occur to federally listed plant species. A No Effect determination has been made for this species.

One crustacean species, vernal pool fairy shrimp, was identified on the official USFWS species list (USFWS 2021). No suitable vernal pool habitat for this species was identified within the Action Area. Therefore, this species is considered absent from the Action Area and a No Effect determination has been made for vernal pool fairy shrimp.

Special status species that were observed or determined to potentially occur in the Action Area based on availability of suitable habitat are discussed more fully in Section 4 of this report. Species determined unlikely to occur in the Action Area based on these same factors are documented accordingly Table 1 and not discussed further in this report.

Table 1. Federally-Listed Species and Critical Habitat Potentially Occurring in the Action Area

Common Name	Scientific Name	Status	Determination
Blunt-nosed leopard lizard	Gambelia sila	FE	No Effect
California Central Valley steelhead DPS	Oncorhynchus mykiss	FT	No Effect
California condor	Gymnogyps californianus	FE	No Effect
California red-legged frog	Rana draytonii	FT	May Affect, Likely to Adversely Affect
California red-legged frog Critical Habitat	—	—	May Affect, Likely to Adversely Affect
Least Bell's vireo	Vireo bellii pusillus	FE	No Effect
Marsh sandwort	Arenaria paludicola	FE	No Effect
South Central California Coast steelhead	Oncorhynchus mykiss	FT	May Affect, Likely to Adversely Affect
Southwestern willow flycatcher	Empidonax trailii extimus	FE	No Effect
Vernal pool fairy shrimp	Branchinecta lynchi	FT	No Effect

Status Codes:
FE: Federally listed; Endangered
FT: Federally listed; Threatened

1.2.2 Critical Habitat

The length of the San Benito River within San Benito County was designated in 2006 as critical habitat for South Central California Coast steelhead. Tres Pinos Creek is located approximately 15 miles upstream of the San Benito River and is not located within critical habitat for SCCC steelhead. Therefore, the Proposed Action will have No Effect on SCCC steelhead critical habitat.

The Action Area is located within CRLF designated critical habitat unit SNB-2. The Proposed Action May Affect, and is Likely to Adversely Affect critical habitat for CRLF.

1.2.3 Proposed Species

There are no federal proposed species that may be affected by the Proposed Action.

1.2.4 Proposed Critical Habitat

The Proposed Action does not fall within proposed critical habitat.

1.3 Authorities and Discretion

Caltrans, as assigned by the Federal Highway Administration (FHWA), is the lead agency under the National Environmental Policy Act (NEPA). California participated in the "Surface Transportation Project Delivery Pilot Program" (Pilot Program) pursuant to 23 United States Code [USC] 327, for more than 5 years, beginning July 1, 2007, and ending September 30, 2012. MAP-21 (P.L. 112-141), signed by President Obama on July 6, 2012, amended 23 USC 327 to establish a permanent Surface Transportation Project Delivery Program. As a result, Caltrans entered into a Memorandum of Understanding pursuant to 23 USC 327 (NEPA Assignment MOU) with the FHWA. The NEPA Assignment MOU became effective October 1, 2012, and was renewed on December 23, 2016, for a term of 5 years. In summary, Caltrans continues to assume FHWA responsibilities under NEPA and other federal environmental laws in the same manner as were assigned under the Pilot Program, with minor changes. With NEPA Assignment, FHWA assigned and Caltrans assumed all of the United States Department of Transportation Secretary's responsibilities under NEPA. This assignment includes projects on the State Highway System and Local Assistance Projects off of the State Highway System within the State of California, except for certain categorical exclusions that FHWA assigned to Caltrans under the 23 USC 326 Categorical Exclusion Assignment MOU, projects excluded by definition, and specific project exclusions.. The County is the Lead Agency under the California Environmental Quality Act (CEQA).

The project will be funded primarily by the Federal Highway Bridge Program (HBP) and the local match will be from State toll credits. In addition, the County will utilize local funds to augment project funding, as needed.

Several federal and State regulations and policies pertain to the project. These regulations and policies are summarized in the subsections below.

1.3.1 Federal Laws and Regulations

National Environmental Policy Act

NEPA was signed into law on January 1, 1970. NEPA requires federal agencies to assess the environmental impacts of their proposed actions prior to making decisions. Using the NEPA process, agencies evaluate the environmental and related social and economic effects of their proposed actions. Agencies also provide opportunities for public review and comment on those evaluations.

NEPA policy requires the federal government to use all practicable means to create and maintain conditions under which man and nature can exist in productive harmony. Federal agencies must incorporate environmental considerations in their planning and decision-making through a systematic interdisciplinary approach. Each federal agency maintains its own procedures for implementing NEPA. The NEPA process begins when an agency proposes to take an action (this can include proposals to adopt rules and regulations, formal plans that direct future actions, programs, and specific projects). Once the proposal is conceptualized and any reasonable alternatives have been developed, the agency must determine if the action has the potential to affect the quality of the human environment.

The FHWA requires California to consent to the jurisdiction of federal courts for actions taken by Caltrans, under the NEPA Assignment MOU, and waiving California's immunity under the Eleventh Amendment to the U.S. Constitution. On March 30, 2017, the FHWA acknowledged the waiver of immunity was adequately re-instated; therefore, Caltrans is authorized to continue to participate in the NEPA Assignment Program. The project is funded in part with federal money. Caltrans, in its assumption of FHWA responsibility, is required to review and approve biological resources surveys and studies including (but not limited to) those prepared pursuant to the Federal Endangered Species Act (FESA) of 1973, the federal Clean Water Act (CWA), and the Migratory Bird Treaty Act (MBTA).

Federal Endangered Species Act

Under provisions of Section 7(a)(2) of FESA, a federal agency that permits, licenses, funds, or otherwise authorizes a project activity must consult with the USFWS if the activity may affect a listed endangered or threatened species or its designated critical habitat. The purpose of this consultation is to ensure that its actions would not jeopardize the continued existence of any listed species or destroy or adversely modify critical habitat.

Under the provisions of the MOU between FHWA and Caltrans concerning the State of California's participation in the Pilot Program, Caltrans serves as the NEPA Lead Agency for compliance with Section 7(a)(2) of FESA. Because this project is covered by the Pilot Program MOU, the FHWA has assigned, and Caltrans has assumed, FHWA responsibility for environmental review, consultation, and coordination on this project.

Clean Water Act

The CWA provides guidance for the restoration and maintenance of the chemical, physical, and biological integrity of the Nation's waters. The guidelines allow the discharge of dredged or fill material into the aquatic system only if there is no practicable alternative that would have less adverse impacts.

Section 404

The United States Army Corps of Engineers (USACE) regulates discharges of dredged or fill material into waters of the United States (waters of the U.S.). These waters include wetlands and non-wetland bodies of water that meet specific criteria. The USACE regulatory jurisdiction, pursuant to Section 404 of the CWA, is founded on a connection, or nexus, between the water body in question and interstate commerce. This connection may be direct (through a tributary system linking a stream channel with traditional navigable waters used in interstate or foreign commerce) or it may be indirect (through a nexus identified in the USACE regulations). In order

to be considered a jurisdictional wetland under Section 404, an area must possess three wetland characteristics: hydrophytic vegetation, hydric soils, and wetland hydrology. Each characteristic must meet a specific set of mandatory wetland criteria.

The discharge of dredged or fill material (temporarily or permanently) into waters of the U.S. (including wetlands) requires authorization from the USACE pursuant to Section 404 of the CWA. Potential waters of the U.S. under the jurisdiction of Section 404 are present within the Action Area.

Section 401

Section 401 requires that an applicant for a federal license or permit that allows activities resulting in a discharge to waters of the U.S. must obtain a State certification that the discharge complies with other provisions of the CWA. The Regional Water Quality Control Boards (RWQCBs) administer the certification program in California. Potential waters of the U.S. under the jurisdiction of Section 401 are present within the Action Area.

Migratory Bird Treaty Act

Native bird species and their nests are protected under the Migratory Bird Treaty Act (MBTA) (16 USC 703–712). The MBTA states that all migratory birds and their parts (including eggs, nests, and feathers) are protected. The MBTA prohibits the willful take, possession, import, export, transport, sale, purchase, barter, or offering for sale, purchase, or barter, of any migratory bird or its eggs, parts, or nests, except as authorized under a valid permit.

Executive Order 13112 – Invasive Species

On February 3, 1999, President Clinton signed Executive Order (EO) 13112 requiring federal agencies to combat the introduction or spread of invasive species in the United States. The order defines invasive species as “any species, including its seeds, eggs, spores, or other biological material capable of propagating that species, that is not native to that ecosystem whose introduction does or is likely to cause economic or environmental harm or harm to human health.” FHWA guidance issued August 10, 1999, directs the use of the State’s invasive species list (which is maintained by the California Invasive Species Council) to define the invasive plants that must be considered as part of NEPA analysis for a proposed project.

Under EO 13112, federal agencies cannot authorize, fund, or carry out actions that they believe are likely to cause or promote the introduction or spread of invasive species in the United States or elsewhere unless all reasonable measures to minimize risk of harm have been analyzed and considered.

1.3.2 State Laws and Regulations

California Environmental Quality Act

Enacted in 1970, CEQA requires State and local government agencies to inform decision-makers and the public about the potential environmental impacts of proposed projects, and to reduce those environmental impacts to the extent feasible. CEQA requires the disclosure of potential environmental impacts and the identification of enforceable measures to avoid or reduce environmental damage through feasible mitigation or project alternatives. A key feature of the CEQA process is the opportunity for the public to review and provide input throughout the

environmental process. The CEQA process allows a robust public disclosure of a project's potential environmental impact and provides for informed governmental decisions.

CEQA requirements apply to public agency projects including activities directly undertaken by a governmental agency, activities financed in whole or in part by a governmental agency, and private activities that require discretionary approval from a governmental agency, as well as private projects that involve governmental participation, financing, or approval.

The County, acting as the CEQA Lead Agency, will review, consider, and take appropriate action on the CEQA document prepared for the proposed project.

California Endangered Species Act

The California Endangered Species Act (CESA) is administered by the California Department of Fish and Wildlife (CDFW) and prohibits the "take" of plant and animal species identified as either threatened or endangered in the State of California by the Fish and Game Commission (Fish and Game Code Sections 2050–2097). "Take" is defined to mean hunt, pursue, catch, capture or kill or to attempt those activities. Sections 2080.1 and 2081 of CESA allow the CDFW to authorize exceptions to the "take" prohibition for State-listed as threatened or endangered plant and animal species for purposes such as public and private development, provided the take is incidental to an otherwise lawful activity and the take is minimized and fully mitigated.

Section 1600 of the California Fish and Game Code

The State of California Code of Regulations empowers the CDFW to issue agreements for any alteration of a river, stream, or lake where fish or wildlife resources may be substantially adversely affected. These regulations do not apply to Tribal Lands. Streams (and rivers) are defined by the presence of a channel bed and banks, and at least an ephemeral flow of water. The CDFW regulates wetland areas only to the extent that those wetlands are part of a river, stream, or lake as defined by the CDFW.

The CDFW has not defined wetlands for jurisdictional purposes. The CDFW generally includes within the jurisdictional limits of streams and lakes any riparian habitat present. Riparian habitat includes willows, alders, and other vegetation typically associated with stream banks or lake shorelines. In most situations, wetlands associated with a stream or lake would fall within the limits of riparian habitat. Thus, defining the limits of CDFW jurisdiction based on riparian habitat will automatically include any wetland areas. Wetlands not associated with a lake, stream, or other regulated areas generally are not subject to CDFW jurisdiction. Streambeds under the jurisdiction of CDFW are present within the Action Area.

Porter-Cologne Water Quality Control Act

The Porter-Cologne Water Quality Control Act of the California Water Code (Section 13000 et seq.) established nine RWQCBs to oversee water quality on a day-to-day basis at the local and/or regional level. Their duties include preparing and updating water quality control plans and associated requirements, and issuing water quality certifications under Section 401 of the federal Clean Water Act. This Act grants ultimate authority to the State Water Resources Control Board over State water rights and water quality policy. Under the Porter-Cologne Water Quality Control Act, the RWQCBs (or State Water Resources Control Board for projects that cross multiple RWQCB jurisdictions) are responsible for issuing National Pollutant Discharge

Elimination System permits for point-source discharges and waste discharge requirements for nonpoint-source discharges into jurisdictional waters of the State. Waters of the State subject to RWQCB jurisdiction under the Porter-Cologne Water Quality Control Act are present within the Action Area.

1.4 Consultation History

1.4.1 Technical Assistance

LSA attended a conference call with Chris Diel of USFWS and Brandon Sanderson of California Department of Fish and Wildlife (CDFW) on August 22, 2011 to discuss the CRLF/California tiger salamander (CTS) (*Ambystoma californiense*) site assessment and the potential for these species to occur in the Action Area. Recommendations included implementation of typical avoidance and minimization measures for both CTS and CRLF, as well as additional surveys and Section 7 consultation for CRLF.

LSA spoke with Devin Best of NMFS on January 5, 2012 about the potential for South Central California Coast steelhead occurrence in the Action Area. Mr. Best advised that this fish does occur in the reach of Tres Pinos Creek within the Action Area, and suggested a dewatering work window of July 15 through October 15, consistent with CDFW guidelines.

LSA requested additional technical assistance from Mr. Best at NMFS on February 6, 2013 for guidance regarding design for a new weir feature. Mr. Best advised that the proposed anchor pipes be removed from the design. Once the pipes were removed from the design, Mr. Best concurred that the weir design was acceptable on April 4, 2013. The weir has subsequently been removed from the design in favor of additional RSP.

LSA spoke with Paul Holmes of Caltrans on February 26, 2021 regarding the recommended in-water work windows for SCCC steelhead. Due to the nature of the design of the new bridge, the central pier needs to be constructed in the same construction season as the bridge superstructure. Construction is expected to take 6 – 8 months and would require a minimum of two construction seasons. Due to these constraints, Mr. Holmes advised that the project request accommodation from NMFS for a June 15 through October 15 work window.

1.4.2 Species Lists

The following agency coordination has been conducted at this time:

- **National Oceanic and Atmospheric Administration Fisheries Service (West Coast Region)**: The official species list was obtained using the online California Species List Tool on January 21, 2021.
- **United States Fish and Wildlife Service (Sacramento)**: The official USFWS species list was acquired via the USFWS Information, Planning, and Consultation System (IPaC) website on February 26, 2013. An updated official species list was obtained on January 27, 2021.

Official species lists received from the USFWS Sacramento Fish and Wildlife Office and from NMFS on January 27, 2021, are included in Appendix A.

1.5 Resource Agency Coordination and Professional Contacts

No resource agency coordination has been conducted at this time. The project will require coordination and permitting through the USACE, the RWQCB, and the CDFW for project-related impacts on jurisdictional aquatic resources. No state incidental take permit or consistency determination for CESA compliance is anticipated.

1.6 Study Methods

This section provides the additional framework by which the listed biological resources identified in Table 1 were reviewed for the proposed project, as well as the methods used in determining the suitability of the habitat for each species considered.

1.6.1 Literature Review

A literature review and records search was conducted to identify the existence or potential occurrence of sensitive or special-status biological resources (e.g., plant and animal species) in or within the vicinity of the Action Area. Federal lists of sensitive species were examined and are included in Appendix A, USFWS and NMFS Species Lists. State records of sensitive and listed plant and wildlife species in the project vicinity were also reviewed. Current and historical aerial photographs were reviewed on Google Earth (2021). Sources that were reviewed included the following:

- CDFW California Natural Diversity Database (CNDDB). 2021. Rarefind 5. January 2021. California 7.5-minute USGS quadrangles searched included: *Quien Sabe Valley, Ruby Canyon, Ortigalita Peak, Cherry Peak, Panoche Pass, Cerro Colorado, Bickmore Canyon, San Benito,* and *Llanada.*
- California Native Plant Society (CNPS). Rare Plant Program. 2021. Inventory of Rare and Endangered Plants (online edition, v8-02). California Native Plant Society, Sacramento, CA. Website: http://www.rareplants.cnps.org (last accessed January 2021). California 7.5-minute USGS quadrangles searched included: *Quien Sabe Valley, Ruby Canyon, Ortigalita Peak, Cherry Peak, Panoche Pass, Cerro Colorado, Bickmore Canyon, San Benito,* and *Llanada.*
- USFWS Information for Planning and Consultation (IPaC). Website: https://ecos.fws.gov/ipac/ (last accessed January 2021).
- National Marine Fisheries Service (NMFS). Website: https://archive.fisheries.noaa.gov/wcr/maps_data/california_species_list_tools.html (last accessed January 2021).
- eBird (Cornell Lab of Ornithology and National Audubon Society). Website: https://ebird.org/explore (last accessed April 2021).

1.6.2 Field Surveys

The field studies required to fully document the environmental conditions of the Action Area included a general survey to map vegetation communities, a preliminary jurisdictional delineation, a site assessment for CRLF and CTS, and a focused plant survey.

General Biological Survey/Vegetation Mapping

A general biological survey and vegetation mapping of the Action Area was conducted by LSA biologist Mike Trueblood on May 11, 2011. A follow-up survey to document any changes in field conditions was conducted by LSA biologist Anna Van Zuuk on April 16, 2020. Naturally occurring vegetation in the Action Area was classified according to A Manual of California Vegetation, Second Edition (Sawyer, Keeler-Wolf, and Evans 2008), as appropriate. Managed or developed areas were classified according to their dominant plant species. The names of the plant species are consistent with The Jepson Manual: Vascular Plants of California, Second Edition (Baldwin, B. G., et. al., editors 2012) and the Jepson Online Interchange for California Floristics (Jepson eFlora 2020).

Wildlife species observed during the survey were identified and recorded. During this survey, the Action Area was also surveyed for potential habitat to support special status plants.

Potential Jurisdictional Waters Determination and Delineation

A delineation of potential waters of the United States (U.S.) potentially subject to regulation by the United States Army Corps of Engineers (USACE) was conducted on July 6, 2011 by LSA biologist Mike Trueblood. Additional data points were added during the follow-up survey by LSA biologist Anna Van Zuuk on April 16, 2020 to document changes in field conditions.

All potential waters of the U.S. in the Action Area were delineated in accordance with the 1987 USACE Wetland Delineation Manual, the September 2008 Regional Supplement - Arid West Region, and the USACE Regulatory Guidance Letter 16-01 regarding Preliminary Jurisdictional Delineations (October 2016). Both field investigations were conducted in accordance with the USACE Routine Approach for small areas (i.e., equal to or less than 5 acres). Formal observation points were described in the field - at each point, a pit was dug and soils and hydrology examined; vegetation was also characterized at each data point.

California Red-Legged Frog and California Tiger Salamander Site Assessment

A field survey for the CRLF and California Tiger Salamander site assessment was conducted by LSA biologist Mike Trueblood on May 11, 2011. A follow-up survey was conducted by LSA biologist Anna Van Zuuk on April 16, 2020. A combined site assessment was prepared in accordance with USFWS Revised Guidance on Site Assessments and Field Surveys for the CRLF, dated August 2005, and with the Interim Guidance on Site Assessment and Field Surveys for Determining Presence or a Negative Finding of the California Tiger Salamander, dated October 2003. The assessment is included in Appendix B.

The follow-up survey in April 2020 did not find any changes to habitat conditions noted in the CRLF and CTS site assessment. Tres Pinos Creek within the Action Area flows too swiftly to provide suitable aquatic breeding habitat for CTS, even in the slower moving sections of the creek, and the California annual grasslands and pasture communities are generally rocky with

few areas for fossorial mammals to burrow or are actively grazed. No suitable burrows or other suitable openings were observed in the Action Area during the follow-up survey.

Focused Plant Survey

LSA biologist Anna Van Zuuk conducted a focused plant survey of the Action Area on April 16, 2020 for marsh sandwort (*Arenaria paludicola*). All plant species observed were identified to a sufficient taxonomic level to determine if they were the target species.

1.6.3 Personnel and Survey Dates

Brief discussions of personnel qualification are provided below and Table 2 provides a summary of the field surveys performed for this project.

- Mr. Trueblood, LSA biologist, has a B.S. in Wildlife, Fish, and Conservation Biology and over 20 years of professional experience conducting biological field studies in California and is a senior staff member (Senior Biologist) at LSA.
- Ms. Belt, former LSA wildlife biologist, had a diverse background as a wildlife biologist, including more than 20 years of experience in conducting habitat and wildlife surveys. She had received specialized training to conduct protocol surveys for a wide range of special-status mammal, bird, amphibian, reptile, invertebrate, and fish species.
- Ms. Summers, former LSA biologist, has over 20 years of professional experience as a general biologist.
- Ms. Van Zuuk, LSA botanist and certified arborist, has a B.S. in Environmental Horticulture and Urban Forestry and 9 years of experience conducting botanical surveys for rare and special-status plant species, noxious weeds, wetland plants, and trees and 6 years of professional experience in wetland delineation.

Table 2. Survey Dates and Personnel

Date	Personnel	Task
May 11, 2011	M. Trueblood, L. Belt	Vegetation mapping, general biological survey, CRLF/CTS site assessment
May 18, 2011	A. Summers	Special status plants survey
July 6, 2011	M. Trueblood	Jurisdictional delineation
April 16, 2020	A. Van Zuuk	Jurisdictional delineation, focused plant survey, CRLF survey, vegetation mapping

1.6.4 Limitations and Assumptions That May Influence Results

The collection of biological field data is normally subject to environmental factors that cannot be controlled or reliably predicted. Consequently, the interpretation of field data must be conservative and must consider the uncertainties and limitations necessarily imposed by the environment. Surveys were conducted during the seasons when the special-status species that could occur in the vicinity of the Action Area would be observable, if present. Several species

considered herein are highly mobile and utilize underground refuges and, therefore, may not be detectable within a given survey area at any given point in time. In addition, the results of the biological resource surveys are limited where extremely dense vegetation obscured views. Due to the experience and qualifications of the consulting biologists involved in the surveys, these limitations are not expected to severely influence the results or considerably alter the findings documented herein.

Design plans, schedules, and construction methods for the project are subject to refinement. Please note that any change in the analyzed design, schedule, or construction methods could affect the conclusions discussed in this report.

This page intentionally left blank

Chapter 2 Proposed Agency Action

2.1 Proposed Action Location

The Action Area is located in central San Benito County, on the eastern side of the Diablo mountain range, and approximately 25 mi south of the City of Hollister and 15 mi east of Highway 25 (Figures 1 through 3). The project is located within the Panoche Pass quadrangle, in Section 2, Township 15 South, and Range 8 East.

The Action Area, totaling 3.66 ac, is approximately 0.15 mi in length and extends along Panoche Road across Tres Pinos Creek (Figure 4).

2.2 Description of Proposed Action

Prior to construction activities, the Tres Pinos Creek channel will be clearly delineated by environmentally sensitive area (ESA) fencing and barrier fencing to keep construction equipment and personnel out of non-work areas. All necessary Best Management Practices (BMPs) will be implemented to ensure that no soil or other materials are discharged into Tres Pinos Creek. BMPs will include the used of wattles and silt fences along access roads and around staging and equipment storage areas.

The total length of the proposed Project would be approximately 685 ft, which includes approximately 550 ft of roadway work beyond the bridge abutments. Roadway work would consist of realigning the roadway downstream (southerly) of the existing bridge to allow for construction of the new bridge in one stage while maintaining traffic flow on the existing alignment during construction. The proposed shifted alignment would improve roadway geometry by eliminating the slight “S” curve over the existing bridge. Figure 4 shows the project design and Action Area on an aerial photo base. Design Plans are included in Appendix C.

The proposed bridge would be approximately 132 ft long with two equal spans supported by a pier, by approximately 35 ft wide. The bridge foundation type is expected to be spread footings at the abutments and piers. The footings would be buried below the channel flowline. The draft plans in Appendix C show preliminary design of the structure (Foundation Plan, Abutment Plans and Pier Details). The footings would be protected from hydraulic scour with Rock Slope Protection. The size and extent of the Rock Slope Protection expected is shown in the draft plans in Appendix C (Construction Details Sheets C-4 and C-5). The proposed structure type is a cast-in-place pre-stressed concrete slab with a structure depth of approximately 2.0 ft. Bridge construction would require falsework in the Tres Pinos Creek channel spanning over the wetted creek area.

The new bridge would have adequate freeboard to address the expected drift material and allow for drift in the channel. The new bridge would provide two 12-ft traffic lanes with adjacent 4-ft wide paved shoulders on either side. The approach rail type at the northwest corner of the bridge would be selected in order to maintain access to a gated driveway located adjacent to the Project boundary. The driveway intersection at Panoche Road would be shifted west by up to 40 ft to improve truck turning access.

A flow diversion will be required during construction of the pier, as water in this section of Tres Pinos Creek generally flows year-round, fed mostly by underground springs in the summer months. The flow diversion will consist of a CMP appropriately sized for expected flows.

This page intentionally left blank

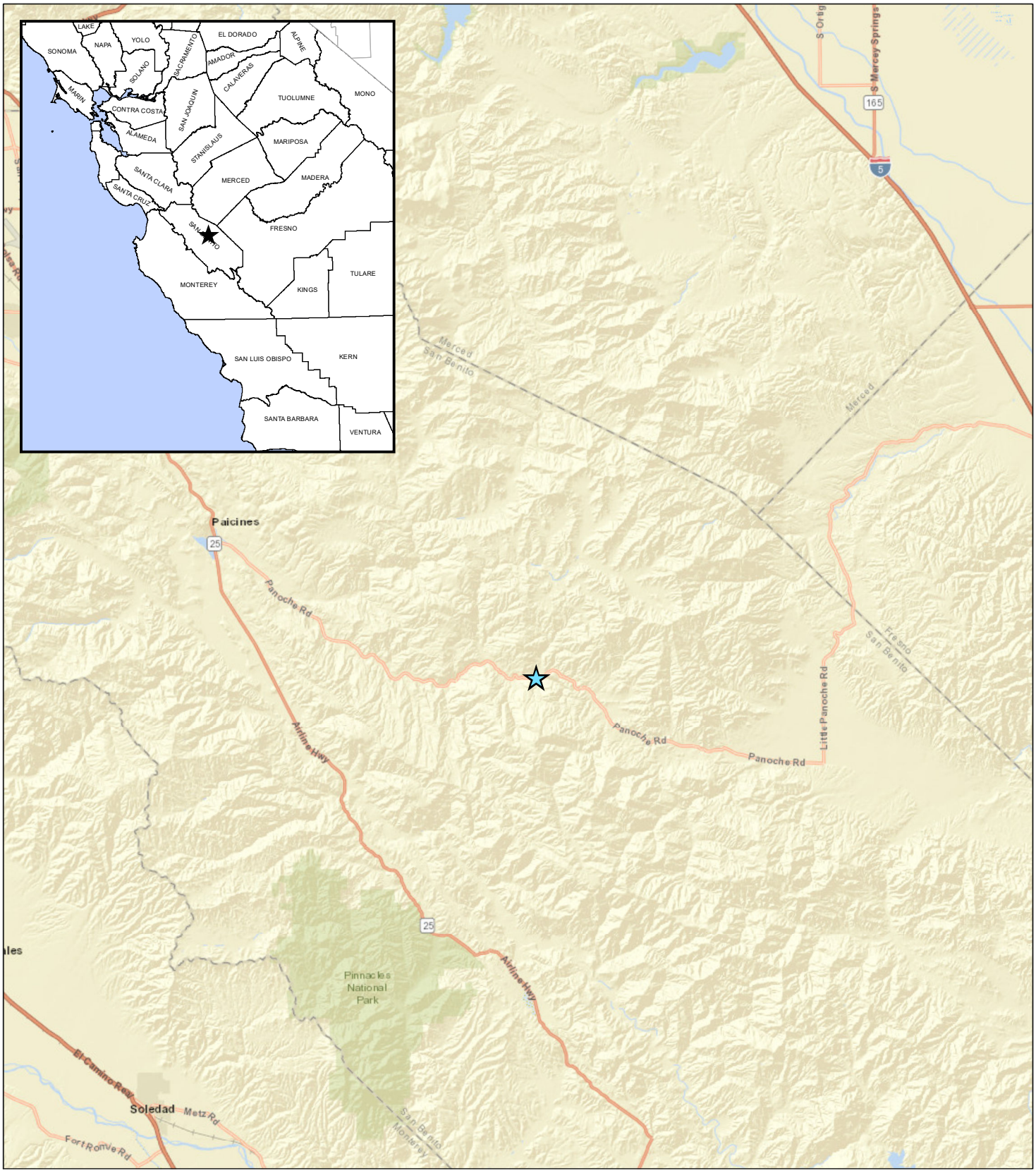

LEGEND

Project Location

FIGURE 1

Panoche Road Bridge (No. 43C0027)
Replacement at Tres Pinos Creek
San Benito County, California; Caltrans District 5
Federal Project No. BRLO-5943(056)

Regional Location

0 2.5 5
Miles

SOURCE: ESRI World Street Map (05/2020)

I:\QCE2001\GIS\Reports\BA\BA_Fig1_Regional_loc.mxd (3/22/2021)

This page intentionally left blank

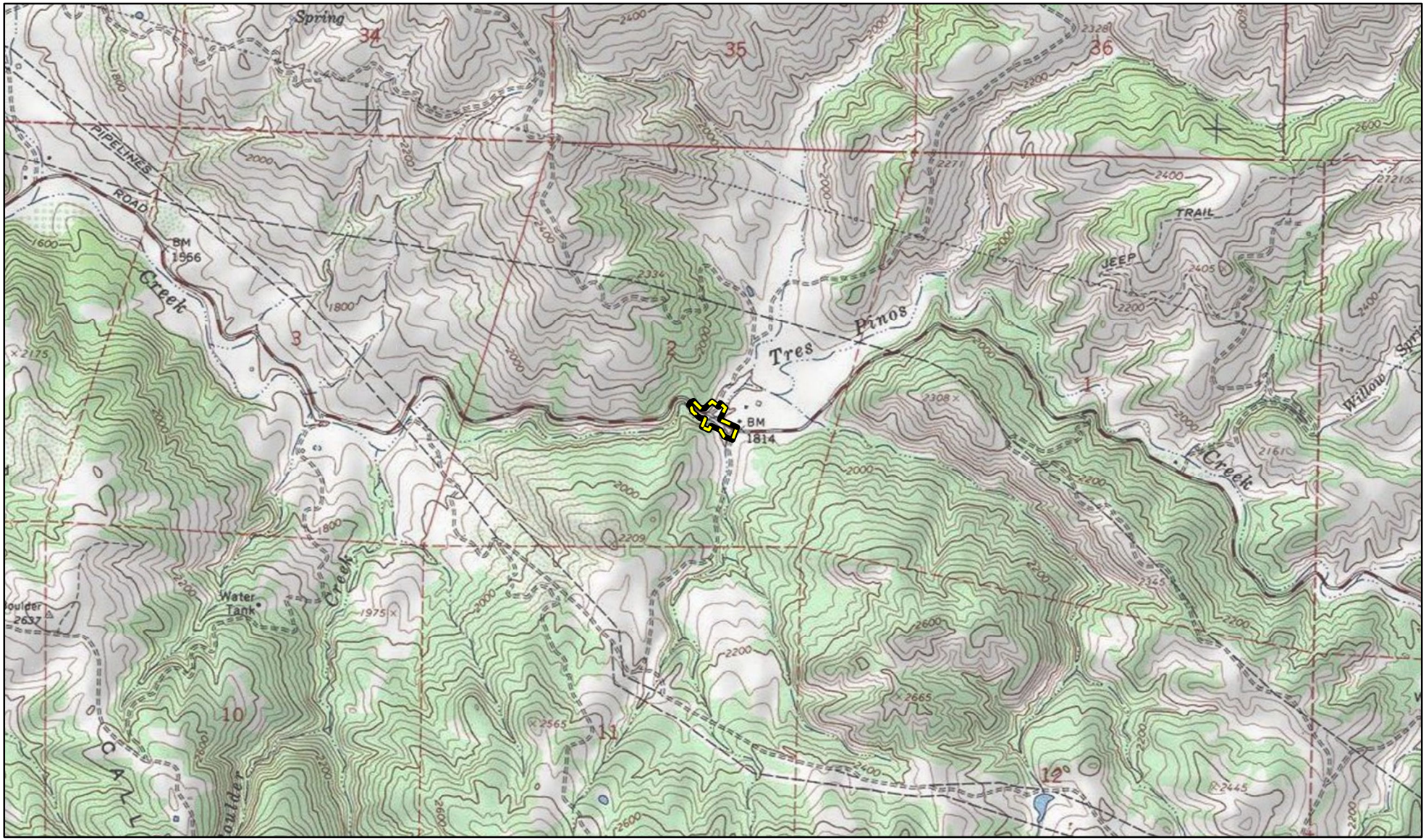

LEGEND

Action Area - (3.66 ac)

FIGURE 2

0 1000 2000
FEET

Panoche Road Bridge (No. 43C0027)
Replacement at Tres Pinos Creek
San Benito County, California; Caltrans District 5
Federal Project No. BRLO-5943(056)

Action Area on Topographic Base

SOURCE: USGS 7.5-minute topographic quadrangle Panoche Pass, CA (1968, 1971 ed.)

I:\QCE2001\GIS\Reports\BA\BA_Fig2_Prj_vicin_topo.mxd (3/22/2021)

This page intentionally left blank

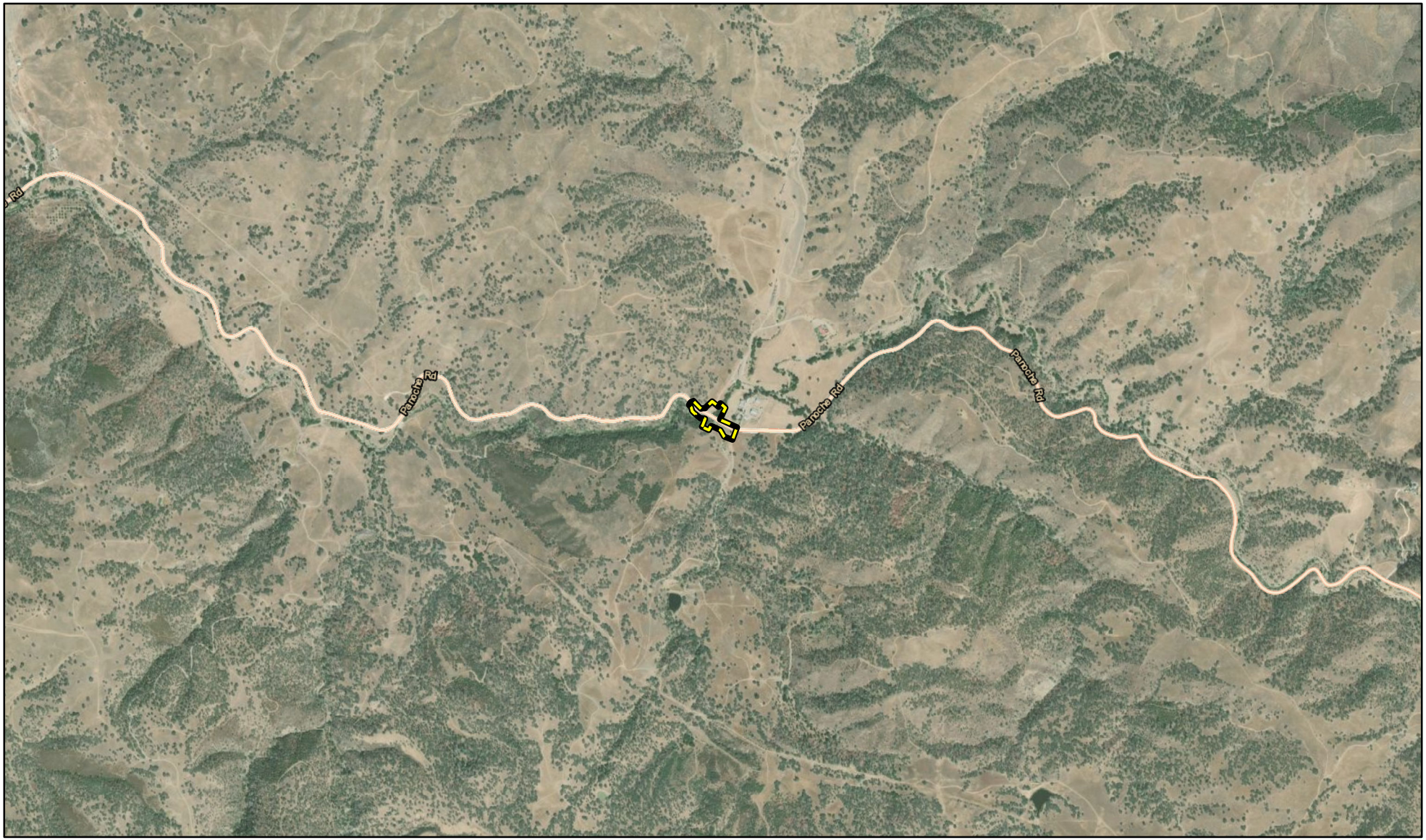

LEGEND

Action Area - (3.66 ac)

0 1000 2000
FEET

SOURCE: ESRI World Imagery (10/2018)

I:\QCE2001\GIS\Reports\BA\BA_Fig3_Prj_vicin_aerial.mxd (3/22/2021)

FIGURE 3

Panoche Road Bridge (No. 43C0027)
Replacement at Tres Pinos Creek
San Benito County, California; Caltrans District 5
Federal Project No. BRLO-5943(056)

Action Area on Aerial Base

This page intentionally left blank

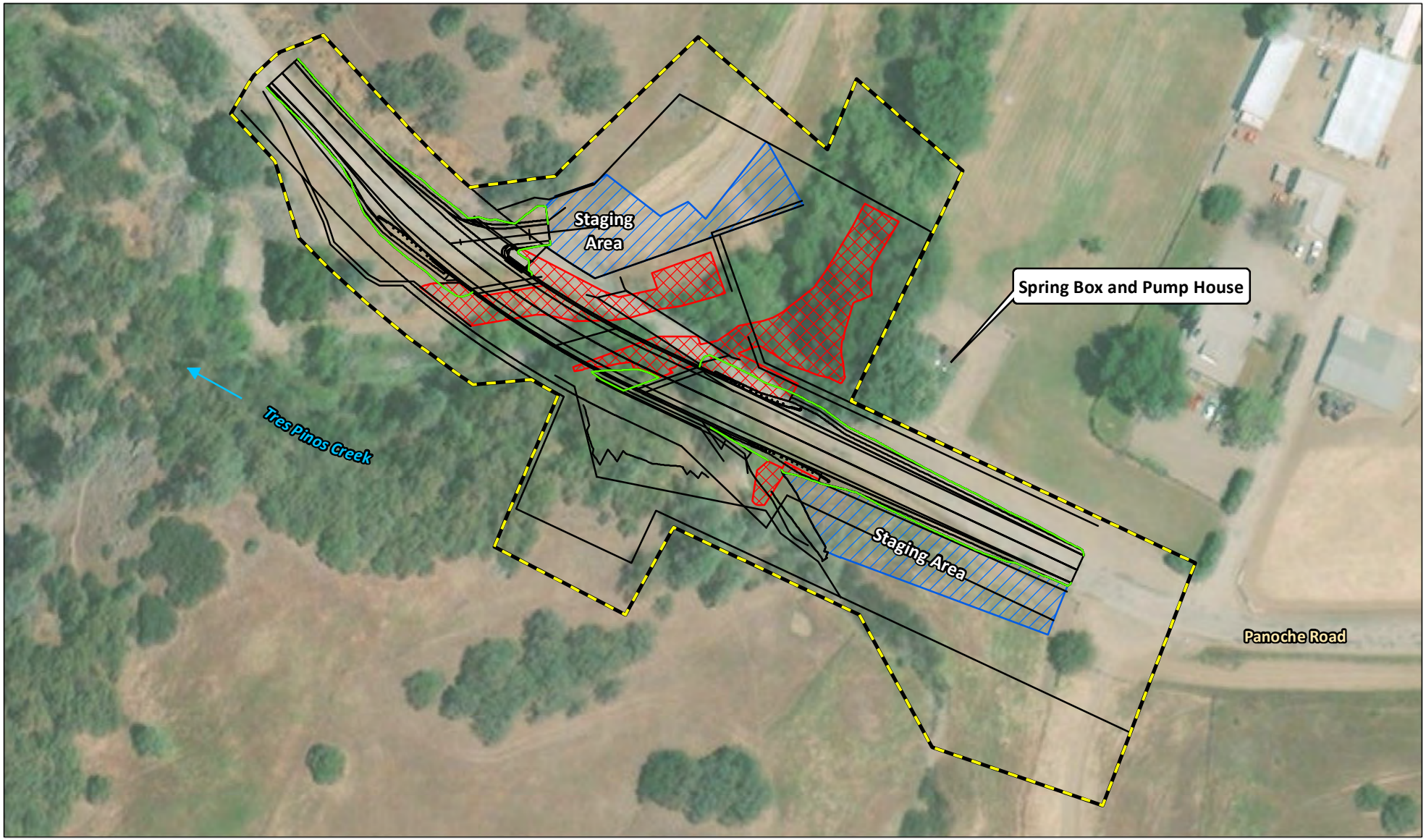

LEGEND

- Action Area - (3.66 ac)
- Project Design
- Rock Slope Protection
- Staging Areas
- Cut and Fill

0 50 100
FEET

SOURCE: Basemap - ESRI World Imagery (10/2018); Design - Quincy Engineering (12/2020)

I:\QCE2001\GIS\Reports\BA\BA_Fig4_AA_design.mxd (6/4/2021)

FIGURE 4

Panoche Road Bridge (No. 43C0027)
Replacement at Tres Pinos Creek
San Benito County, California; Caltrans District 5
Federal Project No. BRLO-5943(056)

Action Area and Project Design

This page intentionally left blank

The CMP will be placed along the low-flow invert of the natural creek and a small earthen berm will be installed at each end of the pipe to direct water into the pipe. Clean sand and gravel will be used at the base of the berm to protect the existing creek channel. Both berms and CMP will be completely removed at the completion of project construction.

Demolition of the existing bridge would involve constructing a temporary decking or other system over the creek channel to avoid dropping debris into the water. The existing bridge would be removed after construction of the new bridge is completed. Scour countermeasures would be used leaving either all or a portion of the existing east abutment in place and removing the west abutment, depending on its condition after further examination. For the purposes of the impact analysis, it was conservatively assumed that the east abutment will be removed. The creek bank would be re-graded to remove a portion of the artificial fill material that was placed during construction of the existing bridge.

An unnamed tributary is located south of the bridge crossing and flows east to west, discharging into Tres Pinos Creek on the west bank adjacent to the existing bridge. The tributary channel currently flows between the southern edge of Panoche Road and the toe of a steep hillside adjacent to the road, past the existing east bridge abutment and into the creek. Because the alignment of the roadway is shifting to the south, this channel would essentially be covered by the construction of the new road bed. The proposed solution is to grade a new channel located along the south edge of the realigned road. A portion of the realigned channel will be rectangular in shape, and bound between the vertical wing wall of the bridge (at the southeast corner of the bridge) and a vertical retaining wall that will retain a new cut slope in the adjacent hillside. The wall length is estimated to be approximately 140 ft long.

Temporary impacts to native vegetation communities would be mitigated through on-site, like-kind revegetation. All temporary barriers, fencing, and erosion control materials would be removed following the completion of project construction or revegetation activities, where applicable.

2.3 Deconstruct the Proposed Action

Activities associated with the proposed Project would include: existing bridge demolition; channel RSP; approach roadway work; new bridge and retaining wall construction; metal beam guard rail installation; bridge railing installation; temporary traffic control during construction; right-of-way acquisition and temporary construction easements; and utility relocation.

2.3.1 Construction Scenario Summary

Bridge construction and in-channel work for the Proposed Action is expected to take 6 – 8 months and will be completed over two construction seasons. Order of construction activities is anticipated to be:

1. Install any necessary BMPs (with approved SWPPP);
2. Install stream diversion;
3. Excavation for center pier and abutments, hard rock excavation expected;

4. Construct pier and bridge abutment footings;

5. Construct center pier and abutment;

6. Place RSP;

7. Place falsework in the channel and form work and construct the bridge deck/superstructure;

8. Removal of the falsework, existing bridge, and stream diversion.

The center pier and footing should be constructed during the same season as the bridge/deck superstructure. Road approach work, construction of the retaining wall, and realignment of the unnamed tributary will also occur concurrent with the bridge construction but are not considered critical path since they do not require in-water work. The second construction season will primarily include removal of the existing bridge and finishing placement of RSP underneath the existing bridge following removal.

Once ESA fencing, barriers, and pre-construction BMPs have been installed, clearing and grubbing of vegetation would be accomplished using hand tools such as chain saws and some heavy machinery such as backhoes. The existing low-water crossing north of the bridge would be utilized to access Tres Pinos Creek to install dewatering measures. Construction mats or other suitable methods to reduce erosion would be employed during construction on the banks and in the creek bed work area.

Excavation for the center pier and abutments would be performed using excavators and backhoes. Installation of the bridge abutments and superstructure would require concrete trucks and concrete pump trucks.

Backfill behind abutments would be accomplished with heavy equipment such as dump trucks, loaders, and backhoes and would be compacted with vibratory and/or sheepsfoot rolling compacting equipment.

Rock slope protection would be placed using dump trucks, loaders, and back hoes.

Roadway approach work and driveway work would be accomplished using dump trucks, graders, compactors, pavers and steam rollers.

Falsework and formwork for bridge construction would be erected using cranes and forklifts.

Demolition and removal of existing bridge and supports would be accomplished with concrete saws, hoe ramps, cranes, and dump trucks.

Staging would occur to the northwest and southeast of the existing bridge (see Figure 4). All construction staging and storing, fuel sites, and concrete mixing sites, etc., would occur outside of ESAs. All construction activities would be limited to the impact boundaries by installing exclusionary fencing (i.e., silt fence or other suitable non-penetrable fencing) along the boundary to prevent construction from encroaching into adjacent areas and to exclude sensitive amphibians and other wildlife from the construction site, as shown in Figure 5.

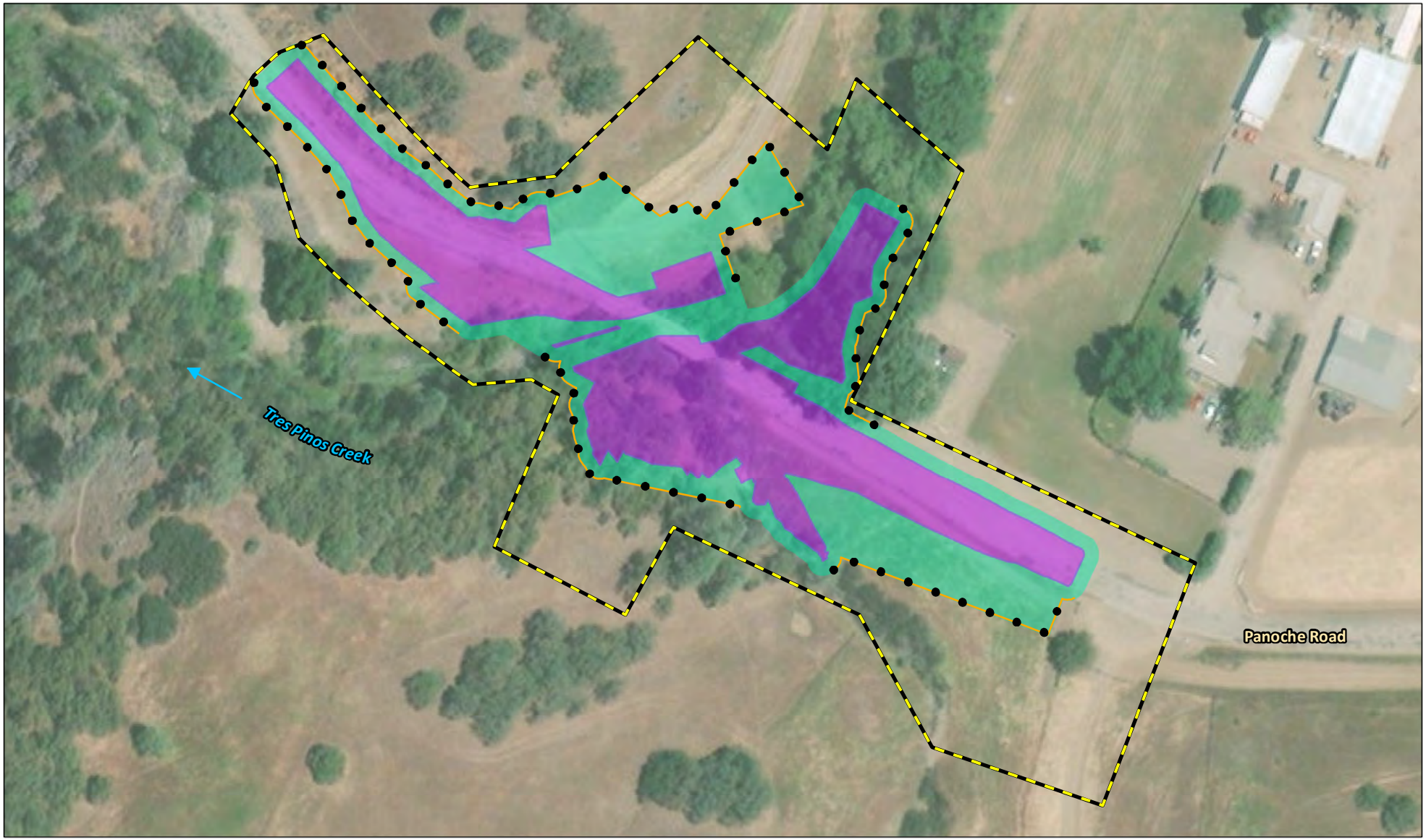

LEGEND

- Action Area - (3.66 ac)
- ESA Fencing
- Permanent Impact Area - (0.98 ac)
- Temporary Impact Area - (0.87 ac)

0 50 100
FEET

FIGURE 5

Panoche Road Bridge (No. 43C0027)
Replacement at Tres Pinos Creek
San Benito County, California; Caltrans District 5
Federal Project No. BRLO-5943(056)

Project Impacts and ESA Fencing

SOURCE: Basemap - ESRI World Imagery (05/2020); Mapping - LSA (10/2020)

I:\QCE2001\GIS\Reports\BA\BA_Fig5_ESA.mxd (6/3/2021)

This page intentionally left blank

Disposal of excavated and demolished material (soil, rock, vegetation, concrete, and other solid waste) would be the responsibility of the contractor and would occur off site in a permitted treatment and/or disposal facility.

Permanent and temporary impacts to all mapped vegetation and land cover types in the Action Area are shown below in Table 3. Temporary impacts include all staging areas, the outer limits of cut and fill (up to the edges of the new roadway pavement), the temporary access routes and vegetation clearing areas, and the area within Tres Pinos Creek where access is required to demolish the existing bridge structures and construct the new bridge pier and abutments. Permanent impacts include the areas of new pavement associated with the roadway approaches and driveway improvement area, along with the new bridge pier and abutments, and RSP areas.

Table 3. Impacts to Land Cover Types in the Action Area (acres)

Land Cover Type	Existing within Action Area	Permanent Impact	Temporary Impact	Total Direct Impact
Arroyo Willow Series	0.41	0.19	0.07	0.26
California Annual Grassland Series	1.65	0.23	0.45	0.68
Mixed Oak Series	0.39	0.09	0.08	0.17
Mulefat Series	0.15	0.03	0.02	0.05
Riverine	0.05	0.01	0.02	0.03
Riverine Wetlands	0.37	0.09	0.12	0.21
Pasture	0.01	----	----	0.00
Developed	0.63	0.34	0.11	0.45
TOTAL	**3.66**	**0.98**	**0.87**	**1.85**

Source: Compiled by LSA (2021).

2.3.2 Project Operation and Maintenance

Operation and maintenance activities would be minimal and primarily limited to the new bridge and approach roadway section. With the exception of monitoring and/or remediation of erosion control measures, it is not expected that these activities would require work beneath the bridge or within any native vegetation or in Tres Pinos Creek. Consequently, operation and maintenance activities for the Proposed Action will not substantially affect SCCC steelhead or CRLF.

2.3.3 Sequencing and Schedule

It is anticipated that construction will begin in 2024, contingent upon HBP funding availability, right-of-way acquisition, and permit processing. Bridge construction and in-channel work for the Proposed Action is expected to take 6 – 8 months and will be completed over two construction seasons. The first construction season will include installation of BMPs and stream diversion, excavation for center pier and abutments, construction of center pier and abutments, placement of falsework and form work and construction of the bridge deck/superstructure. The second construction season will include demolition of the existing bridge, placement of RSP, and any construction activities from the first construction season that area necessary to repeat and/or were unable to be completed in the first construction season.

Work in the live channel of Tres Pinos Creek (consisting of placement of RSP, support pier, and falsework) will be limited to the period of June 15 through October 15 depending on limitations placed on in-water work by permits. If any work within the live channel of Tres Pinos Creek is not completed by October 15, Caltrans will request a written approval/extension from NMFS to allow work past October 15. Revegetation activities are excluded from this requirement with the stipulation that no heavy equipment be used in the channel.

If possible, all trees that will be impacted by project construction will be removed during the non-nesting season for birds (between September 1 and January 31) to avoid take of a nest of bird pursuant to Section 3513 of the California Fish and Game Code. If work must begin during the nesting season (February 1 to August 31), a qualified biologist shall survey all suitable nesting habitat in the Action Area for presence of nesting birds. This survey should occur no more than 10 days prior to the start of construction.

Night work will not be required for the Proposed Action.

2.4 Conservation Measures

2.4.1 Project Design Modifications for Avoidance and Minimization

The following avoidance and minimization measures are proposed to reduce impacts to SCCC steelhead and CRLF potentially occurring in the Action Area:

1. Measures consistent with the current Caltrans' Construction Site Best Management Practice (BMP) Manual (including the Storm Water Pollution Prevention Plan and Water Pollution Control Program [WPCP] Manuals) shall be implemented to minimize effects to SCCC steelhead and CRLF habitat resulting from erosion, siltation, etc., during construction.

2. A SWPPP or WPCP will be prepared by the contractor in accordance with typical provisions associated with a Regional General Permit for Construction Activities (on file with the Central Coast Regional Water Quality Control Board). The SWPPP or WPCP will contain a Spill Response Plan with instructions and procedures for reporting spills, the use and location of spill containment equipment, and the use and location of spill collection materials.

3. Environmentally Sensitive Areas (ESAs), as shown in Figure 5, will be designated at the edge of work adjacent to Tres Pinos Creek to prevent encroachment into the live channel (excluding activities associated with placement of RSP, support pier, and falsework). ESA limits will be marked using orange snow fencing or equivalent and will remain in place and maintained in good condition until construction is complete.

4. During placement of RSP, native topsoil from the channel will be incorporated within the RSP to provide a seeding and planting medium. Areas of RSP above the ordinary high water mark (OHWM) will be revegetated with the seed mix specified in Table 4. In addition, locally obtained willow cuttings/poles will be installed within the lower sections of the RSP near the OHWM.

Table 4. Native Species Mix

Scientific Name	Common Name	Rate (pounds per acre)	Minimum Percent Germination
Artemisia douglasiana	Mugwort	2.0	50
Bromus carinatus	California brome	5.0	85
Elymus trachycaulus	Slender wheatgrass	2.0	60
Eschscholzia californica	California poppy	2.0	70
Festuca microstachys	Small fescue	10.0	80
Hordeum brachyantherum	California barley	2.0	80
Lupinus bicolor	Bicolored lupine	4.0	80

5. Following completion of the new bridge, all fill slopes, temporary impact and/or otherwise disturbed areas shall be restored to preconstruction contours (as appropriate) and revegetated with the native seed mix specified in Table 4.

6. Removal of the existing bridge and subsequent revegetation of the area currently covered by the bridge will restore approximately 0.02 ac of riparian habitat.

7. All construction will be conducted during daylight hours.

2.4.2 Species Specific Conservation Measures – South Central California Coast Steelhead

1. Prior to the start of construction activities in Tres Pinos Creek, the reach of the creek within the Action Area shall be surveyed by a qualified biologist for the presence of SCCC steelhead.

2. Work in the live channel of Tres Pinos Creek (consisting of placement of RSP, support pier, and falsework) will be limited to the period of June 15 through October 15. If any work within the live channel of Tres Pinos Creek is not completed by October 15, Caltrans will request a written approval/extension from NMFS to allow work past October 15. Revegetation activities are excluded from this requirement with the stipulation that no heavy equipment be used in the channel.

3. Prior to project implementation, a qualified biologist will instruct all construction personnel and monitoring biologists of the terms and conditions being implemented to protect SCCC steelhead during construction. The biological monitor will have the full authority to halt work as necessary for the purpose of minimizing adverse effects on SCCC steelhead.

4. The work area for placement of RSP, support pier, and falsework will be dewatered prior to the start of work. Dewatering will consist of installation of a flow diversion to separate the live channel from the area where in-stream work will occur. The flow diversion will consist of CMP sized to accommodate the flows expected during the diversion period.

The CMP will be placed along the low-flow invert of the natural creek and a small earthen berm will be installed at each end of the pipe to direct water into the pipe. Clean sand and gravel will be used at the base of the berm to protect the existing creek channel. Both berms and CMP will be completely removed at the completion of project construction. A qualified biologist will be on site during installation and removal of the flow diversion.

5. Prior to installation of the flow diversion, a qualified biologist will determine the need for a temporary fish seine around the area to be isolated. If a seine is needed, the qualified biologist will oversee the installation. A weighted fish seine will be stretched across the length of the bank where work will be conducted, and will extend a minimum of 3.3 ft beyond the upstream and downstream limits of the work. With the upstream and downstream ends of the seine remaining on the bank, the remainder of the seine will be extended into the channel to approximately 3.3 ft beyond the limits of the area to be dewatered. The seine will be temporarily staked into place in such a way that no fish may enter the isolated area. The purpose of this method is to direct the fish out of the area to be dewatered.

6. After the seine is in place, the qualified biologist will visually survey the waters isolated behind the seine for the presence of any fish. If any fish are encountered within the isolated area, the fish seining process must be repeated until all fish are driven from the area to be isolated, as determined by the fisheries biologist. The qualified biologist will capture any fish that remain in the areas to be dewatered. Electrofishing may be implemented to ensure that all of the fish are removed from the work area.

7. Once all of the fish have been removed from the work area, the flow diversion will be installed in the isolated area. The qualified biologist will be on site during installation and removal of the flow diversion.

2.4.3 Species Specific Conservation Measures – California Red-Legged Frog

Minimization measures are consistent with the provisions of the CRLF “Programmatic Biological Opinion for Projects Funded or Approved under the Federal Highway Administration’s Federal Aid Program (8-8-10-F-58)” dated May 4, 2011, listed below.

At a minimum, the following measures will be taken to reduce adverse effects to CRLF and their habitat:

1. Prior to the start of construction activities in Tres Pinos Creek, the reach of the creek within the Action Area shall be surveyed by a qualified biologist for the presence of CRLF.

2. Only USFWS-approved biologists will participate in activities associated with the capture, handling, and monitoring of CRLF. Biologists authorized under this biological opinion do not need to re-submit their qualifications for subsequent projects conducted pursuant to this biological opinion, unless we have revoked their approval at any time during the life of this biological opinion.

3. Ground disturbance will not begin until written approval is received from the USFWS that the biologist is qualified to conduct the work, unless the individual(s) has/have been approved previously and the USFWS has not revoked that approval.

4. A USFWS-approved biologist will survey the project site 48 hours before the onset of work activities. If any life stage of the CRLF is found and these individuals likely to be or injured by work activities, the approved biologist will be allowed sufficient time to move them from the site before work activities begin. The USFWS-approved biologist will relocate the CRLF the shortest distance possible to a location that contains suitable habitat and will not be affected by activities associated with the proposed project. The relocation site should be in the same drainage to the extent practicable. Caltrans will coordinate with the USFWS on the relocation site prior to the capture of any CRLF. The USFWS-approved biologist will maintain detailed records of any individuals that are moved (e.g., size, coloration, any distinguishing features, photographs [digital preferred]) to assist him or her in determining whether translocated animals are returning to the original point of capture.

5. Before any activities begin on a project, a USFWS-approved biologist will conduct a training session for all construction personnel. At a minimum, the training will include a description of the CRLF and its habitat, the specific measures that are being implemented to conserve the CRLF for the current project, and the boundaries within which the project may be accomplished. Brochures, books and briefings may be used in the training session provided that a qualified person is on hand to answer any questions.

6. A USFWS-approved biologist will be present at the work site until all CRLF have been relocated out of harm's way, workers have been instructed, and disturbance of habitat has been completed. After this time, the state or local sponsoring agency will designate a person to monitor on-site compliance with all minimization measures. The USFWS-approved biologist will ensure that this monitor receives the training outlined in measure 4 and in the identification of CRLF. If the monitor or the USFWS-approved biologist recommends that work be stopped because CRLF would be affected in a manner not anticipated by Caltrans and the USFWS during review of the proposed action, they will notify the resident engineer (the engineer that is directly overseeing and in command of construction activities) immediately. The resident engineer will either resolve the situation by eliminating the effect immediately or require that all actions, which are causing these effects, be halted. If work is stopped, the USFWS will be notified as soon as is reasonably possible.

7. During project activities, all trash that may attract predators will be properly contained, removed from the work site, and disposed of regularly. Following construction, all trash and construction debris will be removed from work areas.

8. All refueling, maintenance, and staging of equipment and vehicles will occur at least 60 ft from riparian habitat or water bodies and not in a location from where a spill would drain directly toward aquatic habitat (e.g., on a slope that drains away from the water). The monitor will ensure contamination of habitat does not occur during such operations. Prior to the onset of work, the County shall provide Caltrans with a plan for prompt and

effective response to any accidental spills. All workers will be informed of the importance of preventing spills and of the appropriate measures to take should a spill occur.

9. Habitat contours will be returned to their original configuration at the end of project activities. This measure will be implemented in all areas temporarily disturbed by activities associated with the project, unless the USFWS and Caltrans determine that it is not feasible or modification of original contours would benefit the CRLF.

10. The number of access routes, size of staging areas, and the total area of the activity will be limited to the minimum necessary to achieve the project goal. ESAs will be delineated to confine access routes and construction areas to the minimum area necessary to complete construction, and minimize the impact to CRLF habitat; this goal includes locating access routes and construction areas outside of wetlands and riparian areas to the maximum extent practicable (Figure 5).

11. Caltrans will attempt to schedule work activities for times of the year when impacts to the CRLF would be minimal. For example, work that would affect large pools that may support breeding would be avoided, to the maximum degree practicable, during the breeding season (November through May). Isolated pools that are important to maintain CRLF through the driest portions of the year would be avoided, to the maximum degree practicable, during the late summer and early fall. Habitat assessments, surveys, and informal consultation between Caltrans and the USFWS during project planning should be used to assist in scheduling work activities to avoid sensitive habitats during key times of the year.

12. To control sedimentation during and after project implementation, Caltrans and the sponsoring agency will implement BMPs outlined in any authorizations or permits, issued under the authorities of the Clean Water Act that it receives for the specific project. If BMPs are ineffective, Caltrans and the sponsoring agency will attempt to remedy the situation immediately, in consultation with the USFWS.

13. If a work site is to be temporarily dewatered by pumping, intakes will be completely screened with wire mesh not larger than 0.2 in to prevent CRLF from entering the pump system. Water will be released or pumped downstream at an appropriate rate to maintain downstream flows during construction. Upon completion of construction activities, any diversions or barriers to flow will be removed in a manner that would allow flow to resume with the least disturbance to the substrate. Alteration of the stream bed will be minimized to the maximum extent possible; any imported material will be removed from the stream bed upon completion of the project.

14. Unless approved by the USFWS, water will not be impounded in a manner that may attract CRLF.

15. A USFWS-approved biologist will permanently remove any individuals of exotic species such as bullfrogs (*Rana catesbeiana*), signal and red swamp crayfish (*Pacifasticus leniusculus*; *Procambarus clarkii*), and centrarchid fishes from the project area, to the maximum extent possible. The USFWS-approved biologist will be responsible for ensuring his or her activities are in compliance with the California Fish and Game Code.

16. If Caltrans demonstrates that disturbed areas have been restored to conditions that allow them to function as habitat for the CRLF, these areas will not be included in the amount of total habitat temporarily disturbed.

17. To ensure that diseases are not conveyed between work sites by the USFWS-approved biologists, the fieldwork code of practice developed by the Declining Amphibian Populations Task Force will be followed at all times.

18. To the extent practicable, project sites will be re-vegetated with an assemblage of native riparian, wetland, and upland vegetation suitable for the area. Locally collected plant materials will be used to the extent practicable. Invasive, exotic plants will be controlled to the maximum extent practicable. This measure will be implemented in all areas disturbed by activities associated with the project, unless the USFWS and Caltrans determine that it is not feasible or practical.

19. Caltrans will not use herbicides as the primary method used to control invasive, exotic plants. However, if Caltrans determines the use of herbicides is the only feasible method for controlling invasive plants at a specific project site, it will implement the following additional protective measures for the CRLF:

    a. Caltrans will not use herbicides during the breeding season for the CRLF.

    b. Caltrans will conduct surveys for the CRLF immediately prior to the start of any herbicide use. If found, CRLF will be relocated to suitable habitat far enough from the project area that no direct contact with herbicides would occur.

    c. Giant reed and other invasive plants will be cut and hauled out by hand and the painted with glyphosate or glyphosate-based products, such as Aquamaster® or Rodeo®.

    d. Licensed and experienced Caltrans staff or a licensed and experienced contractor will use a hand-held sprayer for foliar application of Aquamaster® or Rodeo® where large monoculture stands occur at an individual project site.

    e. All precautions will be taken to ensure that no herbicide is applied to native vegetation.

    f. Herbicides will not be applied on or near open water surfaces (no closer than 60 ft from open water).

    g. Foliar applications of herbicide will not occur when wind speeds are in excess of 3 mi per hour.

    h. No herbicides will be applied within 24 hours of forecasted rain.

    i. Application of all herbicides will be done by a qualified Caltrans staff or contractors to ensure that overspray is minimized, that all application is made in accordance with label recommendations, and with implementation of all required

and reasonable safety measures. A safe dye will be added to the mixture to visually denote treated sites. Application of herbicides will be consistent with the U.S. Environmental Protection Agency's Office of Pesticide Programs, Endangered Species Protection Program county bulletins.

j. All herbicides, fuels, lubricants, and equipment will be stored, poured, or refilled at least 60 ft from riparian habitat or water bodies in a location where a spill would not drain directly toward aquatic habitat. Caltrans will ensure that contamination of habitat does not occur during such operations. Prior to the onset of work, Caltrans will ensure that a plan is in place for a prompt and effective response to accidental spills. All workers will be informed of the importance of preventing spills and of the appropriate measures to take should a spill occur.

2.5 Compensation

No compensation is proposed for either SCCC steelhead or CRLF with the implementation of conservation measures included in Section 2.4.1, 2.4.2, and 2.4.3.

Chapter 3 Environmental Baseline

Environmental baseline refers to the condition of the listed species or its designated critical habitat in the action area, without the consequences to the listed species or designated critical habitat caused by the proposed action. The environmental baseline includes the past and present impacts of all Federal, State, or private actions and other human activities in the action area, the anticipated impacts of all proposed Federal projects in the action area that have already undergone formal or early Section 7 consultation, and the impact of State or private actions which are contemporaneous with the consultation in process. The consequences to listed species or designated critical habitat from ongoing agency activities or existing agency facilities that are not within the agency's discretion to modify are part of the environmental baseline (50 CFR §402.02).

3.1 Summary of Environmental Baseline

The project is located in central San Benito County, on the eastern side of the Diablo mountain range, and approximately 25 mi south of the City of Hollister and 15 mi east of Highway 25 (Figures 1 through 3). The project is located within the Panoche Pass quadrangle, in Section 2, Township 15 South, and Range 8 East.

The Action Area lies in a largely undeveloped area in the low mountains of the Diablo Range, within the Tres Pinos Creek watershed. Aquatic features in the general vicinity are composed of small ephemeral drainages as well as several stock ponds. Many of the ephemeral drainages are tributaries to Tres Pinos Creek. The dominant vegetation communities in the vicinity of the Action Area are willow riparian forest, annual grassland, and mixed oak forest. Primary land uses in the vicinity are rural residences and pasture.

Panoche Road extends east to west through the Action Area and consists of a narrow asphalt roadway. The majority of the land in the area is privately owned and appears to be similar to the Action Area in use and vegetative characteristics.

Undeveloped areas within the Action Area consist of Tres Pinos Creek and associated arroyo willow vegetation and wetlands, mulefat vegetation, mixed oak woodland, California annual grassland, and a small amount of pasture. Lands adjacent to the Action Area consist primarily of annual grassland and oak woodland.

Both CRLF and SCCC steelhead individuals were observed during field surveys. The Action Area contains suitable aquatic breeding and upland habitat for CRLF, and suitable migration habitat for SCCC steelhead. Suitable spawning habitat for SCCC steelhead occurs downstream of the Action Area.

3.2 Description of the Action Area

The Action Area, totaling 3.66 ac, is approximately 0.15 mi in length and extends along Panoche Road across Tres Pinos Creek (Figure 4), consisting of the project’s maximum direct ground disturbance areas plus a buffer to account for potential effects such as noise and vibration that could occur during construction activities. Elevations within the Action Area range

from approximately 1,795 to 1,810 ft above mean sea level. Natural communities in the Action Area include: California annual grassland series, arroyo willow series, mixed oak series, mulefat series, riverine, and riverine wetlands. One other vegetation community not considered natural is also present: pasture. Natural communities comprise 3.02 ac of the Action Area, as shown in Figure 6 and summarized in Table 5.

Table 5: Natural Communities and Other Vegetation in the Action Area (acres)

Natural Communities	Acres
California Annual Grassland Series	1.65
Arroyo Willow Series	0.41
Mixed Oak Series	0.39
Mulefat Series	0.15
Riverine	0.05
Riverine Wetlands	0.37
Subtotal	**3.02**
Other Vegetation Communities	
Pasture	0.01
Subtotal	**0.01**
TOTAL	**3.03**

California Annual Grassland Series

The California annual grassland series, totaling 1.65 ac, is largely located in the northwest and southeast portions of the Action Area. This community is composed of many non-native annual grasses and native wildflowers; composition varies among stands and is influenced by many factors, such as fall temperature, precipitation, microtopography, etc. Dominant plant species include soft brome (*Bromus hordeaceus*), Italian rye grass (*Festuca perennis*), slender oat (*Avena barbata*), foxtail barley (*Hordeum murinum*), narrowleaf goldenbush (*Ericameria linearifolia*), California buckwheat (*Eriogonum fasciculatum*), chick lupine (*Lupinus microcarpus*), and common fiddleneck (*Amsinckia menziesii*).

Arroyo Willow Series

This arroyo willow series, totaling 0.41 ac, occurs along Tres Pinos Creek within the Action Area. Arroyo willow (*Salix lasiolepis*) and narrow leaved willow (*Salix exigua*) are dominant and form a small thicket south of the bridge. Mulefat (*Baccharis salicifolia*), blue elderberry (*Sambucus nigra* ssp. *caerulea*), and Fremont cottonwood (*Populus fremontii*) are also present. Poison hemlock (*Conium maculatum*), California wild rose (*Rosa californica*), California gooseberry (*Ribes californicum*), common plantain (*Plantago major*), California mugwort (*Artemisia douglasiana*), and yellow monkey flower (*Erythranthe guttata*) are the primary understory species.

LEGEND

Action Area - (3.66 ac)

Natural Communities/Land Uses - (3.66 ac)

Arroyo Willow Series - (0.41 ac)

California Annual Grassland Series - (1.65 ac)

Mixed Oak Series - (0.39 ac)

Mulefat Series - (0.15 ac)

Riverine - (0.05 ac)

Riverine Wetlands - (0.37 ac)

Pasture - (0.01 ac)

Developed - (0.63 ac)

0 50 100
FEET

SOURCE: Basemap - ESRI World Imagery (10/2018); Mapping - LSA (10/2020)

I:\QCE2001\GIS\Reports\BA\BA_Fig6_Plant_comm.mxd (3/22/2021)

FIGURE 6

Panoche Road Bridge (No. 43C0027)
Replacement at Tres Pinos Creek
San Benito County, California; Caltrans District 5
Federal Project No. BRLO-5943(056)

Natural Communities/Land Uses

This page intentionally left blank

Mixed Oak Series

The mixed oak series, totaling 0.39 ac, is primarily located on the north-facing slope in the south-central portion of the Action Area. This community consists of an overstory dominated by valley oak (*Quercus lobata*) and coast live oak (*Quercus agrifolia*), and also contains Alvord oak (*Quercus* x *alvordiana*), gray pine (*Pinus sabiniana*), and California juniper (*Juniperus californica*). The understory is dominated by a variety of wildflowers including Padre's shooting star (*Primula clevelandii* var. *gracilis*), purple Chinese houses (*Collinsia heterophylla*), canyon nemophila (*Nemophila heterophylla*), common woodland star (*Lithophragma affine*), California saxifrage (*Micranthes californica*), white plectritis (*Plectritis macrosera*), milk maids (*Cardamine californica*), and lesser baby innocence (*Tonella tenella*).

Mulefat Series

The mulefat series, totaling 0.15 ac, occurs along an unnamed ephemeral tributary originating from a stock pond south of the Action Area. The overstory in this community is dominated by mulefat, with an understory of California mugwort and rabbitsfoot grass (*Polypogon monspeliensis*).

Riverine

Riverine areas, totaling 0.05 ac, are associated with unvegetated open water areas of Tres Pinos Creek lined with concrete and include areas underneath the existing bridge and the low water crossing to the north.

Riverine Wetlands

Riverine wetlands, totaling 0.37 ac, include the Tres Pinos Creek channel and the unnamed ephemeral tributary, minus the riverine areas described previously. This community includes the flowing channel of Tres Pinos Creek and the channel of the ephemeral tributary, and supports a variety of hydrophytic vegetation including arroyo willow, mulefat, bog rush (*Juncus effusus*), California mugwort, rabbitsfoot grass, water cress (*Nasturtium officinale*), floating water primrose (*Ludwigia peploides*), iris leaved rush (*Juncus xiphioides*), hyssop loosestrife (*Lythrum hyssopifolia*), California wild rose, Baltic rush (*Juncus balticus*), and fringed willowherb (*Epilobium ciliatum*).

Pasture

Pasture, totaling 0.01 ac, is a small sliver located in the northeast portion of the Action Area. This vegetation community is likely former grassland and is regularly grazed by livestock. Plant species in this community are routinely grazed and were unidentifiable at the time of the field visit.

3.2.1 Common Animal Species

Mammals

Common species likely to occur in the Action Area include coyote (*Canis latrans*), raccoon (*Procyon lotor*), striped skunk (*Mephitis mephitis*), California ground squirrel (*Otospermophilus beecheyi*), Botta's pocket gopher (*Thomomys bottae*), opossum (*Didelphis virginiana*), and mule deer (*Odocoileus hemionus*).

Birds

Bird species observed during site surveys include wild turkey (*Meleagris gallopavo*), California quail (*Callipepla californica*), and western scrub jay (*Aphelocoma californica*). Other common bird species expected to occur in the Action Area include California towhee (*Pipilo crissalis*), white-crowned sparrow (*Zonotrichia leucophrys*), great horned owl (*Bubo virginianus*), red-shouldered hawk (*Buteo lineatus*), band-tailed pigeon (*Columba fasciata*), western bluebird (*Sialia mexicana*), blue-gray gnatcatcher (*Polioptila caerulea*), acorn woodpecker (*Melanerpes formicivorus*), bushtit (*Psaltriparus minimus*), American crow (*Corvus brachyrhynchos*), and Bewick's wren (*Thryomanes bewickii*).

Amphibians and Reptiles

The only amphibian species observed during the field surveys was potentially CRLF – three frogs though to be CRLF were observed directly downstream of the existing bridge during the May 2011 field surveys. Other common amphibian species likely to occur in the Action Area include the Pacific chorus frog (Pseudacris sierra) and California toad (*Anaxyrus boreas halophilus*).

The only reptile species observed during the site survey was Pacific pond turtle (*Emys marmorata*), three individuals were observed 90 ft downstream of the Action Area. Other reptile species likely to occur in the Action Area include western terrestrial garter snake (*Thamnophis elegan elegans*), western rattlesnake (*Crotalus oreganus*), common gopher snake (*Pituophis catenifer*), and western fence lizard (*Sceloporus occidentalis*).

Fish

South Central California Coast steelhead (*Oncorhynchus mykiss*) (SCCC steelhead) fingerlings were observed in Tres Pinos Creek during the May 2011 field surveys.

3.2.2 Aquatic Resources

Aquatic resources within the Action Area consist of Tres Pinos Creek, its associated wetlands and willow riparian community, and a small, ephemeral tributary that originates from a stock pond south of the Action Area. Tres Pinos Creek within the Action Area is a perennial creek; in summer, it is fed primarily by an underground natural spring. Pooled areas occur in the channel directly adjacent to the Panoche Road Bridge structure where the water moves at a slower velocity than the rest of the channel. The creek bed is composed of bedrock, cobble, and sand. A concrete low-water crossing is located on the north side of Panoche Road. The creek flows northeast to southwest through the Action Area.

Potentially jurisdictional waters of the U.S. within the Action Area are summarized in Table 6 and shown in Figure 7.

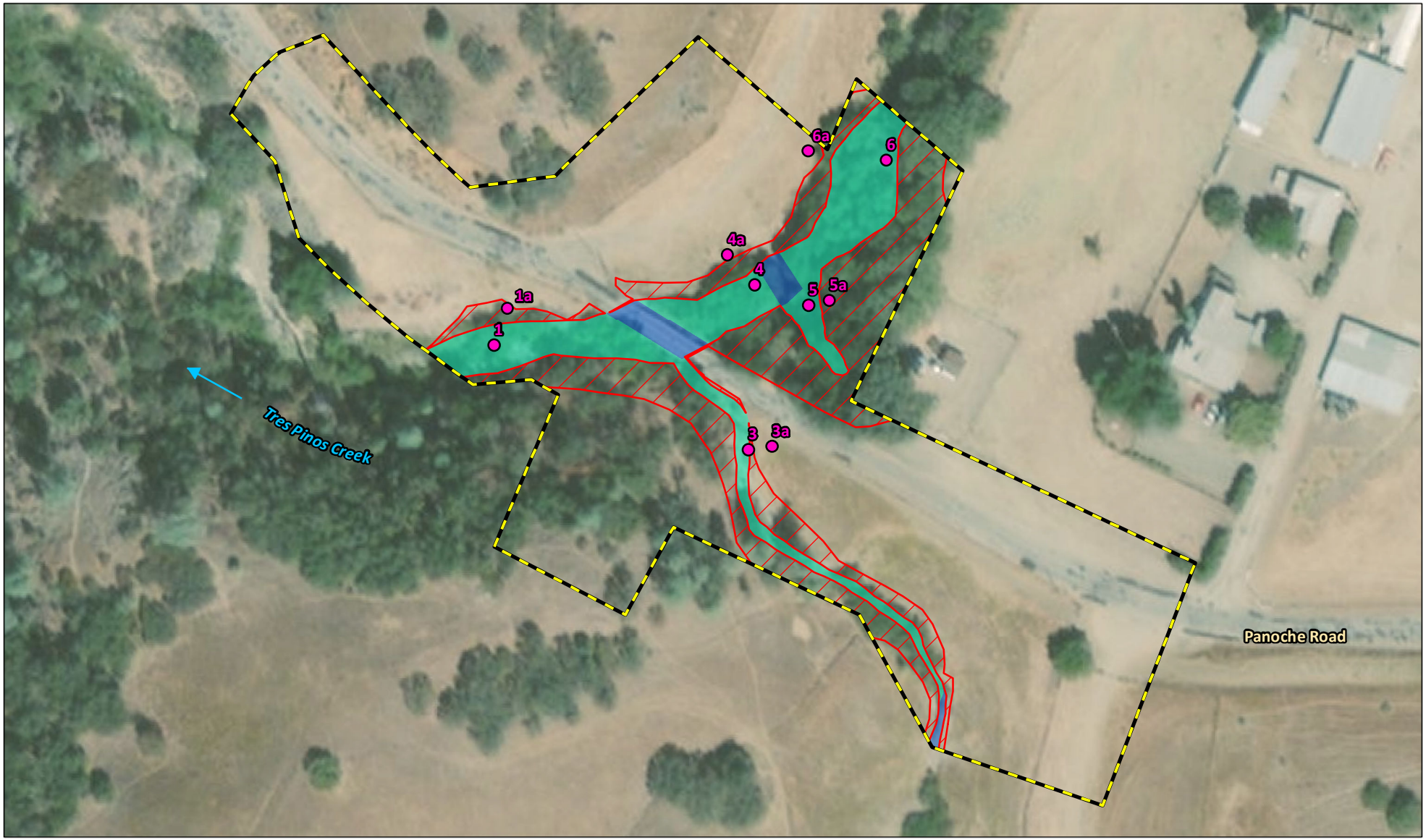

LEGEND

- Action Area - (3.66 ac)
- Data Point
- Riparian Habitat - (0.61 ac)

Potential Jurisdictional Waters of the U.S. - (0.42 ac)

- Wetlands - (0.37 ac)
- Non-Wetland Waters - (0.05 ac)

0 50 100
FEET

SOURCE: Basemap - ESRI World Imagery (10/2018); Mapping - LSA (10/2020)

I:\QCE2001\GIS\Reports\BA\BA_Fig7_Juris_wtrs.mxd (3/22/2021)

FIGURE 7

Panoche Road Bridge (No. 43C0027)
Replacement at Tres Pinos Creek
San Benito County, California; Caltrans District 5
Federal Project No. BRLO-5943(056)

Potential Jurisdictional Waters

This page intentionally left blank

Table 6. Potential Jurisdictional Waters in the Action Area (acres)

Features	Area
Potential Waters of the U.S.	
Wetlands	0.37
Non-Wetland Waters	0.05
Total Potential Waters of the U.S.	**0.42**
CDFW 1602 Waters[1]	**1.03**

[1] CDFW 1602 Waters include all potential waters of the U.S. and adjacent riparian areas.

The aquatic resources within the Action Area described above are expected to be under the jurisdiction of USACE, Regional Water Quality Control Board, and CDFW.

3.2.3 Migration Corridors

Wildlife movement corridors are linear habitats that function to connect two or more areas of significant wildlife habitat. These corridors may function on a local level as links between small habitat patches (e.g., streams in urban settings) or may provide critical connections between regionally significant habitats (e.g., deer movement corridors). Wildlife corridors typically include vegetation and topography that facilitate the movements of wild animals from one area of suitable habitat to another in order to fulfill foraging, breeding, and territorial needs.

Tres Pinos Creek is tributary to the San Benito River approximately 15 mi downstream of the Action Area. It is joined by numerous tributaries along this reach. Tres Pinos Creek within the Action Area is near the upper end of the watershed and provides a link between the foothill habitats and the habitats in the Hollister Valley. Consequently, Tres Pinos Creek provides a potential movement corridor for smaller species of wildlife.

3.3 Habitat Conditions in the Action Area

Habitats and other land cover types within the Action Area north of Panoche Road are subject to minor anthropogenic disturbance, including grazing, runoff, and noise/vibration associated with roadways and agricultural operations along a rural road.

Aquatic habitat within the Action Area, as described in Section 3.2.3, includes Tres Pinos Creek and a small, ephemeral tributary that originates from a stock pond south of the Action Area. Tres Pinos Creek is a perennial feature fed by a natural underground spring. The riparian corridor associated with Tres Pinos Creek is approximately 100 ft wide upstream of the bridge and approximately 70-80 ft wide downstream of the bridge; the riparian corridor associated with the ephemeral tributary is approximately 30 ft wide. SCCC fingerlings were observed within the creek during field surveys in May 2011. Although Tres Pinos Creek within the Action Area does not support spawning habitat for salmonids (having a creek bed composed primarily of bedrock,

large cobble, and sand), suitable spawning habitat of small and medium cobble is present directly downstream of the Action Area. The Tres Pinos Creek channel also includes ponded areas with slow-moving flows that provide suitable aquatic breeding habitat for CRLF. Typically, CRLF eggs are deposited and hatch in vernal pools, ponds (e.g., stock ponds), or deep pools with still or slow-moving water where the larvae develop and eventually leave the breeding pools/ponds to seek refuge in burrows in the uplands surrounding the pools/ponds. Three adult frogs presumed to be CRLF individuals were observed in Tres Pinos Creek underneath the bridge in July 2011.

Upland areas within the Action Area, consisting primarily of California Annual Grassland series, are contiguous with the riparian corridor. CRLF are known to disperse and move about appropriate upland habitat for over 1.0 mile when no significant barriers to movement exist. Significant barriers include high-density residential or urban development, very wide, heavily trafficked roadways, and large rivers and canyons. Grasslands, streams, agricultural and/or disked fields, and most paved roads are not considered to be barriers in most instances (USFWS 2002). Based on these factors, there is high potential for CRLF to disperse within the Action Area. Tres Pinos Creek does not support populations of non-native predatory fish, bullfrogs (*Lithobates catesbeianus*), or Louisiana crawfish (*Procambarus clarkii*), although CRLF populations can persist in the presence of these predators.

The Action Area is located within CRLF designated critical habitat unit SNB-2.

3.4 Status of Federally-Listed/Proposed Species and Designated Critical Habitat within Action Area

3.4.1 Discussion of South Central California Coast Steelhead DPS

The SCCC steelhead DPS was listed as federally threatened on August 18, 1997; reaffirmed January 5, 2006; and updated April 14, 2014. The SCCC steelhead includes all naturally spawned steelhead originating below natural and manmade impassable barriers and includes the length of the San Benito River within San Benito County.

Steelhead are anadromous fish that spend part of their life cycle in freshwater and part in salt water. Spawning occurs in small, freshwater streams where the young remain from one to several years before migrating to the ocean to feed and grow. Adults return to their natal streams to spawn and complete their life cycle. Steelhead require clean, cold, well-oxygenated streams for spawning. Spawning streams must have a substrate of gravel or small cobble to provide safe incubation sites for the eggs. The SCCC steelhead occurs throughout Monterey County and in most of San Luis Obispo and San Benito Counties, as well as the southern part of Santa Clara County.

Survey Results

Within San Benito County, the SCCC steelhead occurs in the San Benito and Pajaro Rivers and their tributaries, including Tres Pinos Creek. Additionally, according to NMFS, the species is intermittently present in the reach of Tres Pinos Creek within the Action Area (Section 1.4). SCCC steelhead fingerlings were observed in Tres Pinos Creek during the May 11, 2011 general biological survey, identified by LSA biologist Laura Belt. Observation of the fish was

incidental and not part of a larger survey effort; number, size, and location of the fish was not documented. Although habitat conditions were largely unchanged during the April 16, 2020 field survey visibility in pooled areas was minimal due to high cover of floating water primrose. No fish or other aquatic species were observed during this survey.

Status of Designated Critical Habitat in the Action Area for South Central California Coast Steelhead DPS

Critical habitat was designated for this species on September 2, 2005, and includes the Pajaro River up to, but not including, the Santa Maria River. Tres Pinos Creek is located approximately 15 miles upstream of the San Benito River and is not located within critical habitat for SCCC steelhead.

3.4.2 Discussion of California Red-Legged Frog

CRLF was listed as federally threatened under the Endangered Species Act on May 23, 1996. Historically, CRLF occupied an estimated 20 percent of the California land area, ranging from central Mendocino County and western Tehama County south in the California Coast Range to northern Baja California, Mexico. CRLF is now absent from 90 percent of its historical range but is still locally abundant in portions of the San Francisco Bay and the central coast. San Benito County is located within the current range of the CRLF.

CRLF inhabits lowlands and foothills in or near permanent sources of water. They prefer ponds, creeks, or marshes with extensive shoreline vegetation. Intermittent streams provide suitable habitat if some surface water remains through the summer. Breeding generally occurs in ponds or stream pools that contain water through late summer and support dense, shrubby, or emergent vegetation such as overhanging willows intermixed with cattails. However, breeding habitat can be varied and may include sag ponds, lagoons, stock ponds and backwaters within streams and creeks.

CRLF use upland areas and riparian vegetation for resting, feeding, dispersal, and estivation. Riparian areas can meet all of these needs; the scope of upland habitat use is not well-understood. CRLF may spend considerable time in suitable upland areas during the summer dry period. They may use a variety of places for estivation, including small mammal burrows, cracks at the bottom of a dry pond, spaces under boulders, rocks, and downed trees, and agricultural features such as drains, watering troughs, and abandoned sheds. Dispersal may occur across varying topography and vegetation type, and during winter rain events CRLF may travel up to 2 mi between water sources. Use of upland and riparian areas is most likely dependent on a number of factors, such as climatic conditions, habitat suitability, and life stage.

USFWS identified four habitat components, termed physical and biological features (PBFs), to define critical habitat for CRLF (USFWS 2010). Descriptions of these PBFs are provided below:

- **Aquatic Breeding Habitat:** Standing bodies of fresh water, including natural and human constructed ponds, slow-flowing streams or pools within streams, and other ephemeral or permanent water bodies that become inundated during winter rains and hold water for a minimum of 20 weeks in all but the driest years. Suitable waterbodies for breeding are generally 10 to 20 inches in depth.

- **Non-Breeding Aquatic Habitat:** Freshwater and wetted riparian habitats, as described above, that may not hold water long enough for CRLF eggs to hatch and complete their aquatic lifecycle, but that do provide for shelter, foraging, predator avoidance, and aquatic dispersal for juvenile and adult frogs. Other wetland habitats that would be considered to meet these elements include, but are not limited to, pools in intermittent streams and seeps and springs of sufficient flow to withstand the summer dry period.
- **Upland Habitat:** Habitat adjacent to breeding and non-breeding aquatic habitat up to a distance of 1.0 mile away in most cases and consisting of various vegetation types, such as grassland, scrublands, woodlands, and riparian areas that provide for CRLF shelter, foraging, and predator avoidance. Upland habitat should include structural features such as boulders, rocks, organic debris such as logs and/or moist leaf litter, and small mammal burrows.
- **Dispersal Habitat:** Accessible upland or riparian dispersal habitat within designated units and between occupied locations within a minimum of 1 mile of each other and allowing for movement between such sites. Dispersal habitat includes various natural and altered habitats such as agricultural fields and vineyards that do not contain barriers (such as heavily traveled roads without bridges or culverts).

Survey Results

Three frogs were observed under the bridge during the July 2011 site visit. They were thought to be CRLF, but due to shadows and vegetation, a positive identification was not made. No CRLF were observed during the April 2020 site visit. The California Natural Diversity Data Base includes eleven records of CRLF in the 9-quad search area. The nearest record is dated 2005 and is from 0.15 mi upstream of the Action Area on Tres Pinos Creek. Although there are no California Natural Diversity Data Base records from within the Action Area, this species is well-documented in the Tres Pinos Creek watershed.

Suitable aquatic breeding and dispersal habitat and upland habitat are present in the Action Area. Tres Pinos Creek within the Action Area features several interconnected pooled areas of slow-moving water; banks are intermittently lined with dense, overhanging vegetation, riparian annuals, and rock. The concrete low water crossing provides aquatic escape cover. Surrounding areas provide a variety of suitable estivation sites, and the riparian corridor itself is a natural path for dispersal.

A site assessment for the CRLF was prepared in August 2011 (Appendix B); the report concluded that CRLF are potentially present in the Action Area, based on species range, species records, and presence of habitat within and near the Action Area. Site conditions were unchanged as of April 2020. Based on the results of this report, CRLF is inferred present in the Action Area.

Status of Designated Critical Habitat in the Action Area for California Red-Legged Frog

Critical habitat for CRLF was designated on March 17, 2010 and the Final Recovery Plan for the CRLF was released on September 12, 2002. The Action Area is located within critical habitat Unit SNB-2 for CRLF.

The PBFs of critical habitat includes those features that are essential to the conservation of a given species (USFWS 2005). Specific to this species, PBFs of critical habitat for CRLF are aquatic and upland areas where suitable breeding and non-breeding habitat is interspersed throughout the landscape and is interconnected by unfragmented dispersal habitat, as described in Section 4.2.1. To be considered to possess the PBFs for CRLF, an area must include two or more suitable breeding locations, a permanent water source, associated uplands surrounding these water bodies up to 300 ft from the water's edge, all within 1.25 mi of one another and connected by barrier-free dispersal habitat that is at least 300 ft wide. A discussion of individual PBFs is provided below:

- **Aquatic Breeding Habitat** – The reach of Tres Pinos Creek within the Action Area provides suitable ponded areas with essential features for CRLF breeding. As described in Section 3.5, the creek is a perennial water feature fed by an underground spring with pooled areas in the channel where the water moves at a slower velocity than the rest of the channel. For successful breeding, a feature must hold water for a minimum of 20 weeks, which is the approximate amount of time needed for egg and tadpole development and metamorphosis so that juveniles can become capable of surviving in upland habitats (USFWS 2002). Additionally, Tres Pinos Creek does not support populations of non-native predatory fish or bullfrogs, although CRLF populations can persist in the presence of these predators.
- **Non-Breeding Aquatic and Riparian Habitat** – Tres Pinos Creek and the ephemeral tributary within the Action Area include numerous shallow freshwater areas such as small seeps, intermittent ponded areas, and moist crevasses among rocks that are not suitable for breeding but provide cover and foraging opportunities. Additionally, the arroyo willow series and mulefat series habitats described in Sections 3.3.2 and 3.3.4, respectively, qualify as riparian habitat and provide cover and foraging opportunities essential to support CRLF populations. The *Recovery Plan for the California Red-legged Frog* (USFWS 2002) defines riparian habitat as "vegetation growing nearby, but not typically in, a body of water on which it depends, and usually extends from the bank of a pond or stream to the margins of the associated floodplain".
- **Upland Habitat**- California annual grassland habitat described in Section 3.3.1 provides food and shelter sites for CRLF. These areas are contiguous with riparian habitats in the Action Area (Figure 6) and afford an unimpeded dispersal corridor between aquatic breeding and non-breeding habitat.
- **Dispersal Habitat** - Areas in the general vicinity of the Action Area (within 1 mi) are largely undeveloped, supporting primarily rural residences and wildlands used for pasture. Aquatic features in the vicinity that could provide suitable CRLF breeding habitat include stock ponds and ephemeral drainages. None of the land uses in the vicinity of the Action Area present a barrier to CRLF dispersal between breeding habitat, other aquatic habitat, and associated upland habitat patches.

This page intentionally left blank

Chapter 4 Effects of the Action

Effects of the action are all consequences to listed species or critical habitat that are caused by the proposed action, including consequences of other activities that are caused by the proposed action. The analysis of effects of the action first identifies stressors from project actions, then exposure to stressors, and finally the response to exposure to stressors to determine consequences. The effects of the action are used to make determinations for each listed species and critical habitat.

4.1 Stressors from the Action

Stressors induce an adverse response in an organism by any physical, chemical, or biological alteration of the environment that can lead to a response from the individual.

The project would result in direct physical disturbance to habitat know to be occupied by SCCC steelhead and CRLF. Project design and conservation measures described in Section 2.4 would reduce the severity of effects to occupied habitat and/or individuals. No lasting adverse effects to habitat quality are anticipated to result from the project. The majority of stressors associated with the project are anticipated to be temporary in nature and all stressors would be limited to effects on suitable aquatic habitat for SCCC steelhead, suitable aquatic breeding habitat for CRLF, and suitable upland estivation and dispersal habitat for CRLF. The following project stressors may affect SCCC steelhead and CRLF within the Action Area (if present during temporary construction activities):

- Permanent modifications to habitat conditions within the Tres Pinos Creek channel due to placement of RSP and support pier.
- Temporary increase in noise, vibration, and fugitive dust.
- Temporary removal of vegetated cover.
- Temporary increase in erosion potential.
- Potential runoff of construction contaminants.
- Temporary increase in water turbidity, flow velocity, and temperature.
- Temporary potential attraction of predators.
- Temporary restriction of aquatic breeding/dispersal habitat.
- Temporary restriction of suitable upland/dispersal habitat.

4.1.1 South Central California Coast DPS

The temporary removal of vegetation for construction access and staging areas would result in localized areas of reduced vegetated cover (refer to Table 3 for the direct vegetation and land cover impact quantities). Vegetation plays an important role in soil stabilization; without vegetation, soil could erode and alter portions of the existing habitat. Increased erosion alters habitat directly by altering the nature of the substrate, removing shrubs, and possibly affecting

other shelter sites. Removal of the riparian canopy associated with Tres Pinos Creek may result in increased water temperatures.

Temporary dewatering of Tres Pinos Creek may result in an increase in flow velocity as water is funneled into a flow diversion. The same flow diversion may also result in an increase in turbidity downstream of the Action Area. Both of these factors may limit the ability of SCCC steelhead to utilize areas directly downstream and upstream of the Action Area during project construction.

Other impacts to potentially suitable habitat would include the possibility of fuel spills and other contaminant runoff from construction equipment that could affect water quality (although all work and access within Tres Pinos Creek would be completed while the area is dewatered).

Following construction and revegetation activities, lasting effects on the physical environment are expected to be minimal. Permanent impacts to non-developed land cover types would represent a negligible loss of potentially suitable aquatic habitat (refer to Table 3), especially when considering the abundance of suitable aquatic habitat in the region. Similarly, any localized changes in hydrology or hydrogeological processes due to installation of the central pier and modification of the bridge abutments are anticipated to be relatively minor. However, the loss of shaded riparian aquatic habitat will persist until suitable riparian vegetation can be reestablished along the creek corridor, typically lasting five years following construction completion.

4.1.2 California Red-Legged Frog

The temporary removal of vegetation for construction access and staging would result in localized areas of reduced vegetated cover. Vegetation plays an important role in soil stabilization; without vegetation, soil could erode and alter portions of the existing habitat. Increased erosion alters habitat directly by altering the nature of the substrate, removing shrubs, and possibly affecting other shelter sites. Removal of the riparian canopy associated with Tres Pinos Creek could expose understory plants and soil temperatures may increase.

During project grading and construction activities, increased noise, vibration and dust would occur within the Action Area. Other impacts to potentially suitable habitat would include the possibility of fuel spills and other contaminant runoff from construction equipment that could affect water quality (although all work and access within Tres Pinos Creek would be completed while the area is dewatered). Potential predators of CRLF could also be attracted to the construction areas by trash, litter, etc. Such effects would be minimized and avoided to the extent feasible through the implementation of BMPs and impact avoidance and minimization features.

Throughout the duration of construction, work areas would be delineated by construction fencing and exclusionary fencing (as detailed in Section 2.4) to prevent sensitive species from entering work areas. This would temporarily limit the availability of suitable upland and dispersal habitat for CRLF within the Action Area.

Following construction and revegetation activities, lasting effects on the physical environment are expected to be minimal. Permanent impacts to non-developed land cover types would

represent a negligible loss of potentially suitable aquatic, upland, and dispersal habitat (refer to Table 3), especially when considering the abundance of suitable aquatic and upland/dispersal habitat in the region. Similarly, any localized changes in hydrology or hydrogeological processes due to installation of the central pier and modification of the bridge abutments are anticipated to be relatively minor. The addition of rock slope protection around the new bridge abutments could provide additional sheltering opportunities for CRLF. However, the loss of shaded riparian aquatic habitat will persist until suitable riparian vegetation can be reestablished along the creek corridor, typically lasting five years following construction completion.

4.2 Exposure to Stressors from the Action

Exposures are defined as the interaction of the species, their resources, and the stressors that result from the project action.

Since no adverse long-term effects to the habitat conditions within the Action Area are anticipated, exposure to project-related stressors would be of limited scope, duration, and intensity.

4.2.1 South Central California Coast DPS

Exposure to stressors for SCCC steelhead would occur during two distinct time periods: in the summer/fall during while the creek is dewatered and in the winter/spring between construction seasons. During dewatering from June 15 to October 15, SCCC steelhead individuals may experience temporary increases in turbidity, flow velocity, and/or temperature within the live channel of Tres Pinos Creek as a result of flow diversion and vegetation removal. The flow diversion may also restrict access to aquatic habitat upstream of the Action Area. These stressors would be of limited duration and restricted to two construction seasons. Since dewatering is proposed during construction, SCCC individuals will not be significantly exposed to increased noise, vibration, or other anthropogenic disturbances as they will be separated from human activity and construction equipment.

Following removal of the flow diversion (from October 16 to June 13 between construction seasons), SCCC individuals will experience a lack of vegetative cover within the Action Area as a result of vegetation removal for construction access. Since vegetation plays an important role in soil stabilization, SCCC individuals may be exposed to increased erosion runoff. Individuals may also be exposed to contaminant runoff from fuel spills from construction equipment that could affect water quality. Such effects would be of limited duration and would be minimized and avoided to the extent feasible through the implementation of BMPs and impact avoidance and minimization features specified in Section 2.4.2.

Installation of RSP and the central support pier will result in the permanent alteration of a portion of the Tres Pinos Creek channel, resulting in a negligible loss of habitat for aquatic dispersal. Following construction and revegetation activities, lasting effects to habitat for SCCC steelhead are expected to be minimal.

The project will not affect spawning habitat and therefore is not anticipated to expose spawning individuals to stressors.

4.2.2 California Red-Legged Frog

CRLF individuals may experience increases in turbidity, flow velocity, and/or temperature within the live channel of Tres Pinos Creek as a result of flow diversion and vegetation removal. These stressors would be of limited duration (June 15 to October 15) and restricted to two construction seasons. CRLF utilize pools within streams for breeding and non-breeding aquatic habitat and for shelter, foraging, predator avoidance, and aquatic dispersal for juvenile and adult frogs Exposure to these stressors is limited in that the creek will be dewatered after the typical CRLF breeding season and will likely only affect individuals utilizing or dispersing through aquatic habitat. Conducting work during the dry season also limits the potential for erosion or runoff to travel to nearby aquatic sites where CRLF individuals could be exposed to impaired water quality.

Individuals in the vicinity of construction work would be subjected to increased noise, vibration, and dust levels from the operation of heavy equipment. Work areas would be delineated by construction fencing to prevent CRLF and other wildlife species from entering work areas. This would temporarily limit the availability of suitable upland and dispersal habitat for CRLF within the Action Area. Potential predators of CRLF could also be attracted to the construction areas by trash, litter, etc. Exposure to these stressors would be of limited duration and following revegetation activities the temporary loss of vegetated cover within the Action Area would be restored. Additionally, these stressors would be minimized and avoided to the extent feasible through the implementation of BMPs and impact avoidance and minimization features described in Section 2.4.3.

Installation of RSP and the central support pier will result in the permanent alteration of a portion of the Tres Pinos Creek channel, resulting in a negligible loss of aquatic breeding and dispersal habitat. The realignment of Panoche Road will result in the permanent alteration of a small amount of upland estivation habitat for CRLF. Following construction and revegetation activities, lasting effects to habitat for CRLF are expected to be minimal.

4.3 Response to the Exposure

4.3.1 South Central California Coast DPS

Construction of the new bridge support pier and placement of RSP will result in permanent impacts to the channel of Tres Pinos Creek and could result in permanent changes to turbidity and flow velocity, which may make it more difficult for SCCC steelhead to move upstream. Flow diversion could result in temporary increases in turbidity, flow velocity, and/or temperature within the live channel of Tres Pinos Creek, which could affect SCCC steelhead by decreasing the ability to feed and respire. Vegetation removal near the live channel could decrease shade cover, thereby increasing water temperature and affecting SCCC steelhead as described above.

4.3.2 California Red-Legged Frog

Construction of the new bridge support pier and placement of RSP will result in permanent impacts to the channel of Tres Pinos Creek and could result in permanent changes to turbidity and flow velocity, which may decrease the suitability of ponded areas within Tres Pinos Creek for CRLF breeding. Installation of flow diversion will also result in temporary loss of breeding

habitat for CRLF during construction. This may lead to CRLF individuals avoiding the work area. Construction would result in increased human activity – pedestrian and mechanical – that could result in disturbance of aquatic and upland habitat and affect CRLF that may be present in the work area, causing individuals to relocate. Vegetation removal for construction access and staging, both adjacent to Tres Pinos Creek and in upland areas, could expose CRLF individuals to increased risk of predation.

4.4 Effects of the Action

Effects of the action are all consequences to listed species or critical habitat that are caused by the proposed action, including consequences of other activities that are caused by the proposed action. A consequence is caused by the proposed action if it would not occur but for the proposed action and it is reasonably certain to occur (50 CFR §402.17). Effects of the action may occur later in time and may include consequences occurring outside the immediate area involved in the action (50 CFR §402.02). The effect of the action is the consequence (behavioral, physical, or physiological) of a response to a stressor.

A conclusion that activities are reasonably certain to occur must be based on clear and substantial information, using the best scientific and commercial data available. Factors to consider whether an activity caused by the proposed action is reasonably certain to occur include, but are not limited to: past experiences with similar activities that have resulted from actions that are similar in scope, nature and magnitude to the proposed action; existing plans for the activities; any remaining economic, administrative and legal requirements necessary for the activity to go forward.

Considerations for determining a consequence to the species or critical habitat is not caused by the proposed action include, but are not limited to: the consequence is so remote in time from the proposed action that it is not reasonably certain to occur; or the consequence is so geographically remote from the immediate area involved in the proposed action that it is not reasonably certain to occur; or the consequence is only reached through a lengthy causal chain that involves so many steps as to make the consequence not reasonably certain to occur (50 CFR §402.17).

4.4.1 South Central California Coast DPS

The Proposed Action will result in permanent impacts to potential steelhead aquatic habitat in Tres Pinos Creek, totaling 0.01 ac, as a result of construction of the support pier and placement of RSP (Figure 4). Temporary impacts, totaling 0.02 ac, will occur as a result of project access for construction of the new bridge, temporary falsework, and demolition of the existing bridge. These activities will also result in 0.31 ac of permanent impacts and 0.21 ac of temporary impacts to wetland and riparian vegetation.

Construction of the support pier and placement of RSP are the only project components anticipated to result in potential for long-term impacts to SCCC steelhead in the form of permanent changes to flow velocity and stream depth. In order to address these potential adverse effects to SCCC steelhead, a hydraulic analysis was prepared (Appendix D). The analysis found that average channel velocity (ft per second) at two cross sections upstream of the Action Area would result in an approximately 2 to 3 ft per second increase in average

channel velocity, and recommended RSP in the channel to protect against these increases. The size and extent of the RSP shown in the draft plans in Appendix C (Construction Details Sheets C-4 and C-5) is expected to protect the channel bank from erosion. The water surface elevation at the upstream face of the bridge for the 100-year storm with the existing bridge in place is 1796.5 ft; the proposed bridge would have a WSEL of 1795.0 ft. These changes represent a minimal shift from existing conditions and are not anticipated to result in substantial adverse effects to SCCC steelhead.

No lasting adverse effects to habitat quality (i.e., to Tres Pinos Creek or the associated riparian vegetation) are anticipated to result from the project. The majority of stressors associated with the project are anticipated to be temporary in nature. Additionally, the stressors will be limited to the discrete area associated with the project site, which constitutes a very small area within the overall range of this DPS. The conservation measures described in Section 2.4.1 and 2.4.2 would reduce the severity of these effects. As a result, the project is not likely to have an adverse effect on the population size or long-term viability of the SCCC DPS.

4.4.2 California Red-Legged Frog

The project will result in 0.10 ac of permanent impacts to riverine and riverine wetland habitats that provide suitable aquatic breeding habitat for CRLF as a result of installation of the support pier and RSP. The project will also result in temporary impacts to aquatic breeding habitat, totaling 0.14 ac, for two seasons as a result of flow diversion and placement of temporary falsework.

The project will result in permanent impacts of 0.54 ac and temporary impacts of 0.62 ac to upland habitat for CRLF. Permanent habitat loss will occur as a result of installation of foundation, wingwalls, etc. for the new bridge and realignment of Panoche Road; temporary impacts will result from project staging, vegetation removal to provide access routes, and other temporary construction disturbance.

Since the Action Area is within designated critical habitat for CRLF and habitats in the Action Area contain PBFs for CRLF critical habitat, the impacts described above may also be considered impacts to critical habitat for CRLF. Impacts to potential CRLF habitat are shown in Figure 8.

No lasting adverse effects to habitat quality (i.e., to Tres Pinos Creek or the associated riparian vegetation) or upland dispersal and estivation habitat (i.e., to are anticipated to result from the project. The majority of stressors associated with the project are anticipated to be temporary in nature. Additionally, the stressors will be limited to the discrete area associated with the project site, which constitutes a very small area within the overall range of this species. The conservation measures described in Section 2.4.1 and 2.4.3 would reduce the severity of these effects. As a result, the project is not likely to have an adverse effect on the population size or long-term viability of CRLF.

4.5 Cumulative Effects

Cumulative effects include the effects of future state, tribal, local or private actions that are reasonably certain to occur in the action area described in this biological assessment. Future

federal actions that are unrelated to the proposed action are not considered in this cumulative effects analysis because those actions will require separate consultation pursuant to Section 7 of the FESA.

Effects to SCCC steelhead and CRLF in the general vicinity of the project likely will occur through habitat loss during public works project similar in scope to the subject project. Effects to these species would be similar to those described in Section 4. Other projects in the region with similar effects would also be required to minimize and/or mitigate those effects, with measures similar to those described in Section 2.4. Consequently, the Proposed Action would not substantially contribute to cumulative effects for SCCC steelhead or CRLF.

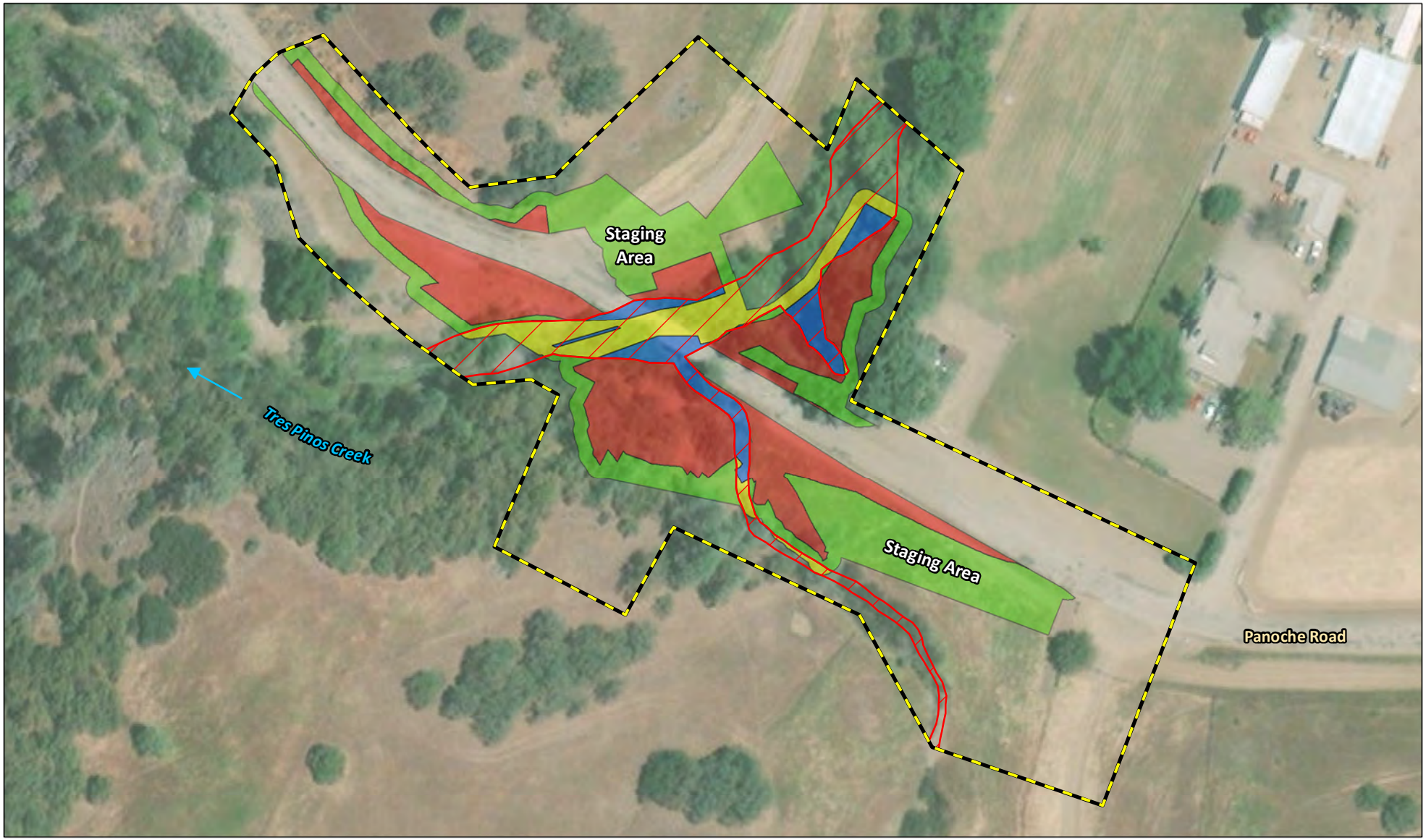

FIGURE 8

LEGEND

- Action Area - (3.66 ac)
- California Red-Legged Frog Aquatic Habitat - (0.42 ac)

Impacts to Aquatic Habitat - (0.24 ac)

- Permanent Impacts - (0.10 ac)
- Temporary Impacts - (0.14 ac)

Impacts to Upland Habitat - (1.16 ac)

- Permanent Impacts - (0.54 ac)
- Temporary Impacts - (0.62 ac)

0 50 100
FEET

Panoche Road Bridge (No. 43C0027)
Replacement at Tres Pinos Creek
San Benito County, California; Caltrans District 5
Federal Project No. BRLO-5943(056)

Impacts to California Red-Legged Frog Habitat

SOURCE: Basemap - ESRI World Imagery (05/2020); Mapping - LSA (10/2020)

I:\QCE2001\GIS\Reports\BA\BA_Fig8_CRLF_Imps.mxd (6/3/2021)

This page intentionally left blank

4.6 Determination

4.6.1 Species and Critical Habitat Determination

No Effect

A no effect determination was made for the following species and designated critical habitat. No consultation is required.

- Blunt-nosed leopard lizard
- California condor
- California Central Valley steelhead
- Least Bell's vireo
- Marsh sandwort
- Southwestern willow flycatcher
- Vernal pool fairy shrimp

May Affect-Not Likely to Adversely Affect

A may affect-not likely to adversely affect determination was not made for any species or designated critical habitat.

May Affect-Likely to Adversely Affect

A may affect-likely to adversely affect determination was made for the following species and designated critical habitat. Formal consultation is required.

- California red-legged frog
- South Central California coast steelhead

This page intentionally left blank

Chapter 5 Literature Cited

Baldwin, Bruce G. et. al., Ed. 2012. *The Jepson Manual: Vascular Plants of California, Second Edition*. University of California Press.

Best, Devin. January 5, 2012 and April 4, 2013. Personal communication.

California Department of Fish and Wildlife. 2021. Rarefind 5 online computer program. Sacramento, CA. Records search executed January 27, 2021. Sacramento, California.

eBird. 2021. eBird: An online database of bird distribution and abundance. eBird, Cornell Lab of Ornithology, Ithaca, New York. Website: http://www.ebird.org. (accessed April 2021).

Environmental Laboratory. 1987. Corps of Engineers Wetlands Delineation Manual. Technical Report Y-97-1. U.S. Army Corps of Engineers Waterways Experiment Station, Vicksburg, MS.

Federal Register. 2005. Endangered and Threatened Species; Designation of Critical Habitat for Seven Evolutionarily Significant Units of Pacific Salmon and Steelhead in California; Final Rule. National Marine Fisheries Service, National Oceanic and Atmospheric Administration. September 2, 2005. Vol. 70, No. 170.

Jepson Online Inventory for California Floristics (eds.) 2020. Jepson eFlora, http://ucjeps.berkeley.edu/eflora/

LSA Associates, Inc. 2011. Site Assessment for California Red-Legged Frog and California Tiger Salamander. Report prepared for the San Benito County's Panoche Road Bridge Replacement Project at Tres Pinos Creek. August 2011. Rocklin, California.

National Marine Fisheries Service. 2020. Google Earth Species list. http://www.westcoast.fisheries.noaa.gov/maps_data/california_species_list_tools.html. Records search executed January 27, 2021.

Sawyer, John O. and Todd Keeler-Wolf. 2008. *A Manual of California Vegetation: Second Edition*. California Native Plant Society. Sacramento, CA.

U.S. Army Engineer Research and Development Center. 2008. *Regional Supplement to the Corps of Engineers Wetland Delineation Manual: Arid Southwest Region*. ERDC/EL TR-08-28.

U.S. Army Corps of Engineers. 2008. Regulatory Guidance Letter No. 08-02. Subject: Jurisdictional Determinations. June 26, 2008.

U.S. Fish and Wildlife Service. 2002. Recovery Plan for the California Red-legged Frog (*Rana draytonii*). U.S. Fish and Wildlife Service, Portland, Oregon.173pp.

_____. 2005. Revised Guidance on Site Assessment and Field Surveys for the California Red-legged Frog. August 2005.

_____. 2010. Revised designation of critical habitat for the California red-legged frog; Final Rule. *Federal Register* 75(51): 12816-12959.

_____. 2020. Information for Planning and Consultation Online Threatened and Endangered Species Lists. Sacramento Fish and Wildlife Office. Records search executed January 27, 2021. Sacramento, California: Sacramento Fish and Wildlife Office.

Appendix A NMFS and USFWS Species Lists

From: NMFSWCRCA Specieslist - NOAA Service Account
To: Anna Van Zuuk
Subject: Re: Caltrans District 5; Panoche Road Bridge Replacement at Tres Pinos Creek
Date: Monday, June 1, 2020 6:20:05 PM

Receipt of this message confirms that NMFS has received your email to nmfswcrca.specieslist@noaa.gov. If you are a federal agency (or representative) and have followed the steps outlined on the California Species List Tools web page (http://www.westcoast.fisheries.noaa.gov/maps_data/california_species_list_tools.html), you have generated an official Endangered Species Act species list.

Messages sent to this email address are not responded to directly. For project specific questions, please contact your local NMFS office.

Northern California/Klamath (Arcata) 707-822-7201

North-Central Coast (Santa Rosa) 707-387-0737

Southern California (Long Beach) 562-980-4000

California Central Valley (Sacramento) 916-930-3600

From: Anna Van Zuuk
To: "nmfswcrca.specieslist@noaa.gov"
Subject: Caltrans District 5; Panoche Road Bridge Replacement at Tres Pinos Creek
Date: Monday, June 1, 2020 6:19:00 PM
Attachments: image001.png

Federal agency name and address:
California Department of Transportation – District 5
50 Higuera Street
San Luis Obispo, CA 93401-5415
Info-d5@dt.ca.gov
(805) 549-3111

Non-federal agency (Project Proponent):
Deems Katada
San Benito County Department of Public Works
2301 Technology Parkway
Hollister, CA 95023
DKatada@cosb.us
(831) 636-4170

Point-of-contact:
Anna Van Zuuk, Biologist/Botanist
Anna.VanZuuk@lsa.net
(916) 844-2983

Quad Name **Quien Sabe Valley**

Quad Number **36121-G2**

ESA Anadromous Fish

SONCC Coho ESU (T) -
CCC Coho ESU (E) -
CC Chinook Salmon ESU (T) -
CVSR Chinook Salmon ESU (T) -
SRWR Chinook Salmon ESU (E) -
NC Steelhead DPS (T) -
CCC Steelhead DPS (T) -
SCCC Steelhead DPS (T) - **X**
SC Steelhead DPS (E) -
CCV Steelhead DPS (T) - **X**
Eulachon (T) -
sDPS Green Sturgeon (T) -

ESA Anadromous Fish Critical Habitat

SONCC Coho Critical Habitat -

CCC Coho Critical Habitat -
CC Chinook Salmon Critical Habitat -
CVSR Chinook Salmon Critical Habitat -
SRWR Chinook Salmon Critical Habitat -
NC Steelhead Critical Habitat -
CCC Steelhead Critical Habitat -
SCCC Steelhead Critical Habitat -
SC Steelhead Critical Habitat -
CCV Steelhead Critical Habitat -
Eulachon Critical Habitat -
sDPS Green Sturgeon Critical Habitat -

ESA Marine Invertebrates

Range Black Abalone (E) -
Range White Abalone (E) -

ESA Marine Invertebrates Critical Habitat

Black Abalone Critical Habitat -

ESA Sea Turtles

East Pacific Green Sea Turtle (T) -
Olive Ridley Sea Turtle (T/E) -
Leatherback Sea Turtle (E) -
North Pacific Loggerhead Sea Turtle (E) -

ESA Whales

Blue Whale (E) -
Fin Whale (E) -
Humpback Whale (E) -
Southern Resident Killer Whale (E) -
North Pacific Right Whale (E) -
Sei Whale (E) -
Sperm Whale (E) -

ESA Pinnipeds

Guadalupe Fur Seal (T) -
Steller Sea Lion Critical Habitat -

Essential Fish Habitat

Coho EFH -
Chinook Salmon EFH -
Groundfish EFH -
Coastal Pelagics EFH -
Highly Migratory Species EFH -

MMPA Species (See list at left)

ESA and MMPA Cetaceans/Pinnipeds

See list at left and consult the NMFS Long Beach office
562-980-4000

MMPA Cetaceans -
MMPA Pinnipeds -

Quad Name **Ruby Canyon**
Quad Number **36121-G1**

ESA Anadromous Fish

SONCC Coho ESU (T) -
CCC Coho ESU (E) -
CC Chinook Salmon ESU (T) -
CVSR Chinook Salmon ESU (T) -
SRWR Chinook Salmon ESU (E) -
NC Steelhead DPS (T) -
CCC Steelhead DPS (T) -
SCCC Steelhead DPS (T) - **X**
SC Steelhead DPS (E) -
CCV Steelhead DPS (T) - **X**
Eulachon (T) -
sDPS Green Sturgeon (T) -

ESA Anadromous Fish Critical Habitat

SONCC Coho Critical Habitat -
CCC Coho Critical Habitat -
CC Chinook Salmon Critical Habitat -
CVSR Chinook Salmon Critical Habitat -
SRWR Chinook Salmon Critical Habitat -
NC Steelhead Critical Habitat -
CCC Steelhead Critical Habitat -
SCCC Steelhead Critical Habitat -
SC Steelhead Critical Habitat -
CCV Steelhead Critical Habitat -
Eulachon Critical Habitat -
sDPS Green Sturgeon Critical Habitat -

ESA Marine Invertebrates

Range Black Abalone (E) -

Range White Abalone (E) -

ESA Marine Invertebrates Critical Habitat

Black Abalone Critical Habitat -

ESA Sea Turtles

East Pacific Green Sea Turtle (T) -

Olive Ridley Sea Turtle (T/E) -

Leatherback Sea Turtle (E) -

North Pacific Loggerhead Sea Turtle (E) -

ESA Whales

Blue Whale (E) -

Fin Whale (E) -

Humpback Whale (E) -

Southern Resident Killer Whale (E) -

North Pacific Right Whale (E) -

Sei Whale (E) -

Sperm Whale (E) -

ESA Pinnipeds

Guadalupe Fur Seal (T) -

Steller Sea Lion Critical Habitat -

Essential Fish Habitat

Coho EFH -

Chinook Salmon EFH -

Groundfish EFH -

Coastal Pelagics EFH -

Highly Migratory Species EFH -

MMPA Species (See list at left)

ESA and MMPA Cetaceans/Pinnipeds

See list at left and consult the NMFS Long Beach office 562-980-4000

MMPA Cetaceans -

MMPA Pinnipeds -

Quad Name **Ortigalita Peak**

Quad Number **36120-G8**

ESA Anadromous Fish

SONCC Coho ESU (T) -

CCC Coho ESU (E) -
CC Chinook Salmon ESU (T) -
CVSR Chinook Salmon ESU (T) -
SRWR Chinook Salmon ESU (E) -
NC Steelhead DPS (T) -
CCC Steelhead DPS (T) -
SCCC Steelhead DPS (T) - **X**
SC Steelhead DPS (E) -
CCV Steelhead DPS (T) - **X**
Eulachon (T) -
sDPS Green Sturgeon (T) -

ESA Anadromous Fish Critical Habitat

SONCC Coho Critical Habitat -
CCC Coho Critical Habitat -
CC Chinook Salmon Critical Habitat -
CVSR Chinook Salmon Critical Habitat -
SRWR Chinook Salmon Critical Habitat -
NC Steelhead Critical Habitat -
CCC Steelhead Critical Habitat -
SCCC Steelhead Critical Habitat -
SC Steelhead Critical Habitat -
CCV Steelhead Critical Habitat -
Eulachon Critical Habitat -
sDPS Green Sturgeon Critical Habitat -

ESA Marine Invertebrates

Range Black Abalone (E) -
Range White Abalone (E) -

ESA Marine Invertebrates Critical Habitat

Black Abalone Critical Habitat -

ESA Sea Turtles

East Pacific Green Sea Turtle (T) -
Olive Ridley Sea Turtle (T/E) -
Leatherback Sea Turtle (E) -
North Pacific Loggerhead Sea Turtle (E) -

ESA Whales

Blue Whale (E) -
Fin Whale (E) -
Humpback Whale (E) -
Southern Resident Killer Whale (E) -

North Pacific Right Whale (E) -
Sei Whale (E) -
Sperm Whale (E) -

ESA Pinnipeds

Guadalupe Fur Seal (T) -
Steller Sea Lion Critical Habitat -

Essential Fish Habitat

Coho EFH -
Chinook Salmon EFH -
Groundfish EFH -
Coastal Pelagics EFH -
Highly Migratory Species EFH -

MMPA Species (See list at left)

ESA and MMPA Cetaceans/Pinnipeds

See list at left and consult the NMFS Long Beach office
562-980-4000

MMPA Cetaceans -
MMPA Pinnipeds -

Quad Name **Cherry Peak**
Quad Number **36121-F2**

ESA Anadromous Fish

SONCC Coho ESU (T) -
CCC Coho ESU (E) -
CC Chinook Salmon ESU (T) -
CVSR Chinook Salmon ESU (T) -
SRWR Chinook Salmon ESU (E) -
NC Steelhead DPS (T) -
CCC Steelhead DPS (T) -
SCCC Steelhead DPS (T) - **X**
SC Steelhead DPS (E) -
CCV Steelhead DPS (T) -
Eulachon (T) -
sDPS Green Sturgeon (T) -

ESA Anadromous Fish Critical Habitat

SONCC Coho Critical Habitat -

CCC Coho Critical Habitat -
CC Chinook Salmon Critical Habitat -
CVSR Chinook Salmon Critical Habitat -
SRWR Chinook Salmon Critical Habitat -
NC Steelhead Critical Habitat -
CCC Steelhead Critical Habitat -
SCCC Steelhead Critical Habitat - **X**
SC Steelhead Critical Habitat -
CCV Steelhead Critical Habitat -
Eulachon Critical Habitat -
sDPS Green Sturgeon Critical Habitat -

ESA Marine Invertebrates

Range Black Abalone (E) -
Range White Abalone (E) -

ESA Marine Invertebrates Critical Habitat

Black Abalone Critical Habitat -

ESA Sea Turtles

East Pacific Green Sea Turtle (T) -
Olive Ridley Sea Turtle (T/E) -
Leatherback Sea Turtle (E) -
North Pacific Loggerhead Sea Turtle (E) -

ESA Whales

Blue Whale (E) -
Fin Whale (E) -
Humpback Whale (E) -
Southern Resident Killer Whale (E) -
North Pacific Right Whale (E) -
Sei Whale (E) -
Sperm Whale (E) -

ESA Pinnipeds

Guadalupe Fur Seal (T) -
Steller Sea Lion Critical Habitat -

Essential Fish Habitat

Coho EFH -
Chinook Salmon EFH -
Groundfish EFH -
Coastal Pelagics EFH -
Highly Migratory Species EFH -

MMPA Species (See list at left)

ESA and MMPA Cetaceans/Pinnipeds

See list at left and consult the NMFS Long Beach office
562-980-4000

MMPA Cetaceans -
MMPA Pinnipeds -

Quad Name **Panoche Pass**
Quad Number **36121-F1**

ESA Anadromous Fish

SONCC Coho ESU (T) -
CCC Coho ESU (E) -
CC Chinook Salmon ESU (T) -
CVSR Chinook Salmon ESU (T) -
SRWR Chinook Salmon ESU (E) -
NC Steelhead DPS (T) -
CCC Steelhead DPS (T) -
SCCC Steelhead DPS (T) - **X**
SC Steelhead DPS (E) -
CCV Steelhead DPS (T) - **X**
Eulachon (T) -
sDPS Green Sturgeon (T) -

ESA Anadromous Fish Critical Habitat

SONCC Coho Critical Habitat -
CCC Coho Critical Habitat -
CC Chinook Salmon Critical Habitat -
CVSR Chinook Salmon Critical Habitat -
SRWR Chinook Salmon Critical Habitat -
NC Steelhead Critical Habitat -
CCC Steelhead Critical Habitat -
SCCC Steelhead Critical Habitat -
SC Steelhead Critical Habitat -
CCV Steelhead Critical Habitat -
Eulachon Critical Habitat -
sDPS Green Sturgeon Critical Habitat -

ESA Marine Invertebrates

Range Black Abalone (E) -

Range White Abalone (E) -

ESA Marine Invertebrates Critical Habitat

Black Abalone Critical Habitat -

ESA Sea Turtles

East Pacific Green Sea Turtle (T) -

Olive Ridley Sea Turtle (T/E) -

Leatherback Sea Turtle (E) -

North Pacific Loggerhead Sea Turtle (E) -

ESA Whales

Blue Whale (E) -

Fin Whale (E) -

Humpback Whale (E) -

Southern Resident Killer Whale (E) -

North Pacific Right Whale (E) -

Sei Whale (E) -

Sperm Whale (E) -

ESA Pinnipeds

Guadalupe Fur Seal (T) -

Steller Sea Lion Critical Habitat -

Essential Fish Habitat

Coho EFH -

Chinook Salmon EFH -

Groundfish EFH -

Coastal Pelagics EFH -

Highly Migratory Species EFH -

MMPA Species (See list at left)

ESA and MMPA Cetaceans/Pinnipeds

See list at left and consult the NMFS Long Beach office

562-980-4000

MMPA Cetaceans -

MMPA Pinnipeds -

Quad Name **Cerro Colorado**

Quad Number **36120-F8**

ESA Anadromous Fish

SONCC Coho ESU (T) -

CCC Coho ESU (E) -
CC Chinook Salmon ESU (T) -
CVSR Chinook Salmon ESU (T) -
SRWR Chinook Salmon ESU (E) -
NC Steelhead DPS (T) -
CCC Steelhead DPS (T) -
SCCC Steelhead DPS (T) - **X**
SC Steelhead DPS (E) -
CCV Steelhead DPS (T) - **X**
Eulachon (T) -
sDPS Green Sturgeon (T) -

ESA Anadromous Fish Critical Habitat

SONCC Coho Critical Habitat -
CCC Coho Critical Habitat -
CC Chinook Salmon Critical Habitat -
CVSR Chinook Salmon Critical Habitat -
SRWR Chinook Salmon Critical Habitat -
NC Steelhead Critical Habitat -
CCC Steelhead Critical Habitat -
SCCC Steelhead Critical Habitat -
SC Steelhead Critical Habitat -
CCV Steelhead Critical Habitat -
Eulachon Critical Habitat -
sDPS Green Sturgeon Critical Habitat -

ESA Marine Invertebrates

Range Black Abalone (E) -
Range White Abalone (E) -

ESA Marine Invertebrates Critical Habitat

Black Abalone Critical Habitat -

ESA Sea Turtles

East Pacific Green Sea Turtle (T) -
Olive Ridley Sea Turtle (T/E) -
Leatherback Sea Turtle (E) -
North Pacific Loggerhead Sea Turtle (E) -

ESA Whales

Blue Whale (E) -
Fin Whale (E) -
Humpback Whale (E) -
Southern Resident Killer Whale (E) -

North Pacific Right Whale (E) -
Sei Whale (E) -
Sperm Whale (E) -

ESA Pinnipeds

Guadalupe Fur Seal (T) -
Steller Sea Lion Critical Habitat -

Essential Fish Habitat

Coho EFH -
Chinook Salmon EFH -
Groundfish EFH -
Coastal Pelagics EFH -
Highly Migratory Species EFH -

MMPA Species (See list at left)

ESA and MMPA Cetaceans/Pinnipeds

See list at left and consult the NMFS Long Beach office
562-980-4000

MMPA Cetaceans -
MMPA Pinnipeds -

Quad Name **Bickmore Canyon**
Quad Number **36121-E2**

ESA Anadromous Fish

SONCC Coho ESU (T) -
CCC Coho ESU (E) -
CC Chinook Salmon ESU (T) -
CVSR Chinook Salmon ESU (T) -
SRWR Chinook Salmon ESU (E) -
NC Steelhead DPS (T) -
CCC Steelhead DPS (T) -
SCCC Steelhead DPS (T) - **X**
SC Steelhead DPS (E) -
CCV Steelhead DPS (T) -
Eulachon (T) -
sDPS Green Sturgeon (T) -

ESA Anadromous Fish Critical Habitat

SONCC Coho Critical Habitat -

CCC Coho Critical Habitat -
CC Chinook Salmon Critical Habitat -
CVSR Chinook Salmon Critical Habitat -
SRWR Chinook Salmon Critical Habitat -
NC Steelhead Critical Habitat -
CCC Steelhead Critical Habitat -
SCCC Steelhead Critical Habitat - **X**
SC Steelhead Critical Habitat -
CCV Steelhead Critical Habitat -
Eulachon Critical Habitat -
sDPS Green Sturgeon Critical Habitat -

ESA Marine Invertebrates

Range Black Abalone (E) -
Range White Abalone (E) -

ESA Marine Invertebrates Critical Habitat

Black Abalone Critical Habitat -

ESA Sea Turtles

East Pacific Green Sea Turtle (T) -
Olive Ridley Sea Turtle (T/E) -
Leatherback Sea Turtle (E) -
North Pacific Loggerhead Sea Turtle (E) -

ESA Whales

Blue Whale (E) -
Fin Whale (E) -
Humpback Whale (E) -
Southern Resident Killer Whale (E) -
North Pacific Right Whale (E) -
Sei Whale (E) -
Sperm Whale (E) -

ESA Pinnipeds

Guadalupe Fur Seal (T) -
Steller Sea Lion Critical Habitat -

Essential Fish Habitat

Coho EFH -
Chinook Salmon EFH -
Groundfish EFH -
Coastal Pelagics EFH -
Highly Migratory Species EFH -

MMPA Species (See list at left)

ESA and MMPA Cetaceans/Pinnipeds

See list at left and consult the NMFS Long Beach office
562-980-4000

MMPA Cetaceans -
MMPA Pinnipeds -

Quad Name **San Benito**
Quad Number **36121-E1**

ESA Anadromous Fish

SONCC Coho ESU (T) -
CCC Coho ESU (E) -
CC Chinook Salmon ESU (T) -
CVSR Chinook Salmon ESU (T) -
SRWR Chinook Salmon ESU (E) -
NC Steelhead DPS (T) -
CCC Steelhead DPS (T) -
SCCC Steelhead DPS (T) - **X**
SC Steelhead DPS (E) -
CCV Steelhead DPS (T) - **X**
Eulachon (T) -
sDPS Green Sturgeon (T) -

ESA Anadromous Fish Critical Habitat

SONCC Coho Critical Habitat -
CCC Coho Critical Habitat -
CC Chinook Salmon Critical Habitat -
CVSR Chinook Salmon Critical Habitat -
SRWR Chinook Salmon Critical Habitat -
NC Steelhead Critical Habitat -
CCC Steelhead Critical Habitat -
SCCC Steelhead Critical Habitat - **X**
SC Steelhead Critical Habitat -
CCV Steelhead Critical Habitat -
Eulachon Critical Habitat -
sDPS Green Sturgeon Critical Habitat -

ESA Marine Invertebrates

Range Black Abalone (E) -

Range White Abalone (E) -

ESA Marine Invertebrates Critical Habitat

Black Abalone Critical Habitat -

ESA Sea Turtles

East Pacific Green Sea Turtle (T) -

Olive Ridley Sea Turtle (T/E) -

Leatherback Sea Turtle (E) -

North Pacific Loggerhead Sea Turtle (E) -

ESA Whales

Blue Whale (E) -

Fin Whale (E) -

Humpback Whale (E) -

Southern Resident Killer Whale (E) -

North Pacific Right Whale (E) -

Sei Whale (E) -

Sperm Whale (E) -

ESA Pinnipeds

Guadalupe Fur Seal (T) -

Steller Sea Lion Critical Habitat -

Essential Fish Habitat

Coho EFH -

Chinook Salmon EFH -

Groundfish EFH -

Coastal Pelagics EFH -

Highly Migratory Species EFH -

MMPA Species (See list at left)

ESA and MMPA Cetaceans/Pinnipeds

See list at left and consult the NMFS Long Beach office 562-980-4000

MMPA Cetaceans -

MMPA Pinnipeds -

Quad Name **Llanada**

Quad Number **36120-E8**

ESA Anadromous Fish

SONCC Coho ESU (T) -

CCC Coho ESU (E) -
CC Chinook Salmon ESU (T) -
CVSR Chinook Salmon ESU (T) -
SRWR Chinook Salmon ESU (E) -
NC Steelhead DPS (T) -
CCC Steelhead DPS (T) -
SCCC Steelhead DPS (T) - **X**
SC Steelhead DPS (E) -
CCV Steelhead DPS (T) - **X**
Eulachon (T) -
sDPS Green Sturgeon (T) -

ESA Anadromous Fish Critical Habitat

SONCC Coho Critical Habitat -
CCC Coho Critical Habitat -
CC Chinook Salmon Critical Habitat -
CVSR Chinook Salmon Critical Habitat -
SRWR Chinook Salmon Critical Habitat -
NC Steelhead Critical Habitat -
CCC Steelhead Critical Habitat -
SCCC Steelhead Critical Habitat -
SC Steelhead Critical Habitat -
CCV Steelhead Critical Habitat -
Eulachon Critical Habitat -
sDPS Green Sturgeon Critical Habitat -

ESA Marine Invertebrates

Range Black Abalone (E) -
Range White Abalone (E) -

ESA Marine Invertebrates Critical Habitat

Black Abalone Critical Habitat -

ESA Sea Turtles

East Pacific Green Sea Turtle (T) -
Olive Ridley Sea Turtle (T/E) -
Leatherback Sea Turtle (E) -
North Pacific Loggerhead Sea Turtle (E) -

ESA Whales

Blue Whale (E) -
Fin Whale (E) -
Humpback Whale (E) -
Southern Resident Killer Whale (E) -

North Pacific Right Whale (E) -
Sei Whale (E) -
Sperm Whale (E) -

ESA Pinnipeds

Guadalupe Fur Seal (T) -
Steller Sea Lion Critical Habitat -

Essential Fish Habitat

Coho EFH -
Chinook Salmon EFH -
Groundfish EFH -
Coastal Pelagics EFH -
Highly Migratory Species EFH -

MMPA Species (See list at left)

ESA and MMPA Cetaceans/Pinnipeds

See list at left and consult the NMFS Long Beach office
562-980-4000

MMPA Cetaceans -
MMPA Pinnipeds -

Anna Van Zuuk | Biologist/Botanist
ISA Certified Arborist, WE-12612A
LSA | 201 Creekside Ridge Court, Suite 250
Roseville, CA 95678
- - - - - - - - - - - -
916-772-7450 Roseville Office
916-844-2983 Direct Line
530-320-2304 Mobile
Website

SACRAMENTO AREA
SustainableBusiness

United States Department of the Interior

FISH AND WILDLIFE SERVICE
Ventura Fish And Wildlife Office
2493 Portola Road, Suite B
Ventura, CA 93003-7726
Phone: (805) 644-1766 Fax: (805) 644-3958

In Reply Refer To: January 28, 2021
Consultation Code: 08EVEN00-2020-SLI-0457
Event Code: 08EVEN00-2021-E-00396
Project Name: Panoche Road Bridge Replacement

Subject: Updated list of threatened and endangered species that may occur in your proposed project location or may be affected by your proposed project

To Whom It May Concern:

The enclosed list identifies species listed as threatened and endangered, species proposed for listing as threatened or endangered, designated and proposed critical habitat, and species that are candidates for listing that may occur within the boundary of the area you have indicated using the U.S. Fish and Wildlife Service's (Service) Information Planning and Conservation System (IPaC). The species list fulfills the requirements under section 7(c) of the Endangered Species Act (Act) of 1973, as amended (16 U.S.C. 1531 et seq.). Please note that under 50 CFR 402.12(e) of the regulations implementing section 7 of the Act, the species list should be verified after 90 days. We recommend that verification be completed by visiting the IPaC website at regular intervals during project planning and implementation for updates to species lists following the same process you used to receive the enclosed list. Please include the Consultation Tracking Number in the header of this letter with any correspondence about the species list.

Due to staff shortages and excessive workload, we are unable to provide an official list more specific to your area. Numerous other sources of information are available for you to narrow the list to the habitats and conditions of the site in which you are interested. For example, we recommend conducting a biological site assessment or surveys for plants and animals that could help refine the list.

If a Federal agency is involved in the project, that agency has the responsibility to review its proposed activities and determine whether any listed species may be affected. If the project is a major construction project*, the Federal agency has the responsibility to prepare a biological assessment to make a determination of the effects of the action on the listed species or critical habitat. If the Federal agency determines that a listed species or critical habitat is likely to be adversely affected, it should request, in writing through our office, formal consultation pursuant to section 7 of the Act. Informal consultation may be used to exchange information and resolve conflicts with respect to threatened or endangered species or their critical habitat prior to a

written request for formal consultation. During this review process, the Federal agency may engage in planning efforts but may not make any irreversible commitment of resources. Such a commitment could constitute a violation of section 7(d) of the Act.

Federal agencies are required to confer with the Service, pursuant to section 7(a)(4) of the Act, when an agency action is likely to jeopardize the continued existence of any proposed species or result in the destruction or adverse modification of proposed critical habitat (50 CFR 402.10(a)). A request for formal conference must be in writing and should include the same information that would be provided for a request for formal consultation. Conferences can also include discussions between the Service and the Federal agency to identify and resolve potential conflicts between an action and proposed species or proposed critical habitat early in the decision-making process. The Service recommends ways to minimize or avoid adverse effects of the action. These recommendations are advisory because the jeopardy prohibition of section 7(a)(2) of the Act does not apply until the species is listed or the proposed critical habitat is designated. The conference process fulfills the need to inform Federal agencies of possible steps that an agency might take at an early stage to adjust its actions to avoid jeopardizing a proposed species.

When a proposed species or proposed critical habitat may be affected by an action, the lead Federal agency may elect to enter into formal conference with the Service even if the action is not likely to jeopardize or result in the destruction or adverse modification of proposed critical habitat. If the proposed species is listed or the proposed critical habitat is designated after completion of the conference, the Federal agency may ask the Service, in writing, to confirm the conference as a formal consultation. If the Service reviews the proposed action and finds that no significant changes in the action as planned or in the information used during the conference have occurred, the Service will confirm the conference as a formal consultation on the project and no further section 7 consultation will be necessary. Use of the formal conference process in this manner can prevent delays in the event the proposed species is listed or the proposed critical habitat is designated during project development or implementation.

Candidate species are those species presently under review by the Service for consideration for Federal listing. Candidate species should be considered in the planning process because they may become listed or proposed for listing prior to project completion. Preparation of a biological assessment, as described in section 7(c) of the Act, is not required for candidate species. If early evaluation of your project indicates that it is likely to affect a candidate species, you may wish to request technical assistance from this office.

Only listed species receive protection under the Act. However, sensitive species should be considered in the planning process in the event they become listed or proposed for listing prior to project completion. We recommend that you review information in the California Department of Fish and Wildlife's Natural Diversity Data Base. You can contact the California Department of Fish and Wildlife at (916) 324-3812 for information on other sensitive species that may occur in this area.

[*A Biological Assessment is required for construction projects (or other undertakings having similar physical impacts) that are major Federal actions significantly affecting the quality of the human environment as defined in the National Environmental Policy Act (42 U.S.C. 4332(2)

(c)). For projects other than major construction activities, the Service suggests that a biological evaluation similar to a Biological Assessment be prepared to determine whether the project may affect listed or proposed species and/or designated or proposed critical habitat. Recommended contents of a Biological Assessment are described at 50 CFR 402.12.]

Attachment(s):

- Official Species List

Official Species List

This list is provided pursuant to Section 7 of the Endangered Species Act, and fulfills the requirement for Federal agencies to "request of the Secretary of the Interior information whether any species which is listed or proposed to be listed may be present in the area of a proposed action".

This species list is provided by:

Ventura Fish And Wildlife Office
2493 Portola Road, Suite B
Ventura, CA 93003-7726
(805) 644-1766

Project Summary

Consultation Code: 08EVEN00-2020-SLI-0457
Event Code: 08EVEN00-2021-E-00396
Project Name: Panoche Road Bridge Replacement
Project Type: BRIDGE CONSTRUCTION / MAINTENANCE
Project Description: LSA Project No. QCE2001
Project Location:

Approximate location of the project can be viewed in Google Maps: https://www.google.com/maps/@36.654581489880925,-121.06696697876367,14z

Counties: San Benito County, California

Endangered Species Act Species

There is a total of 7 threatened, endangered, or candidate species on this species list.

Species on this list should be considered in an effects analysis for your project and could include species that exist in another geographic area. For example, certain fish may appear on the species list because a project could affect downstream species.

IPaC does not display listed species or critical habitats under the sole jurisdiction of NOAA Fisheries[1], as USFWS does not have the authority to speak on behalf of NOAA and the Department of Commerce.

See the "Critical habitats" section below for those critical habitats that lie wholly or partially within your project area under this office's jurisdiction. Please contact the designated FWS office if you have questions.

---

1. NOAA Fisheries, also known as the National Marine Fisheries Service (NMFS), is an office of the National Oceanic and Atmospheric Administration within the Department of Commerce.

Birds

NAME	STATUS
California Condor *Gymnogyps californianus* Population: U.S.A. only, except where listed as an experimental population There is **final** critical habitat for this species. The location of the critical habitat is not available. Species profile: https://ecos.fws.gov/ecp/species/8193	Endangered
Least Bell's Vireo *Vireo bellii pusillus* There is **final** critical habitat for this species. The location of the critical habitat is not available. Species profile: https://ecos.fws.gov/ecp/species/5945	Endangered
Southwestern Willow Flycatcher *Empidonax traillii extimus* There is **final** critical habitat for this species. The location of the critical habitat is not available. Species profile: https://ecos.fws.gov/ecp/species/6749	Endangered

Reptiles

NAME	STATUS
Blunt-nosed Leopard Lizard *Gambelia silus* No critical habitat has been designated for this species. Species profile: https://ecos.fws.gov/ecp/species/625	Endangered

Amphibians

NAME	STATUS
California Red-legged Frog *Rana draytonii* There is **final** critical habitat for this species. Your location overlaps the critical habitat. Species profile: https://ecos.fws.gov/ecp/species/2891	Threatened

Crustaceans

NAME	STATUS
Vernal Pool Fairy Shrimp *Branchinecta lynchi* There is **final** critical habitat for this species. The location of the critical habitat is not available. Species profile: https://ecos.fws.gov/ecp/species/498	Threatened

Flowering Plants

NAME	STATUS
Marsh Sandwort *Arenaria paludicola* No critical habitat has been designated for this species. Species profile: https://ecos.fws.gov/ecp/species/2229	Endangered

Critical habitats

There is 1 critical habitat wholly or partially within your project area under this office's jurisdiction.

NAME	STATUS
California Red-legged Frog *Rana draytonii* https://ecos.fws.gov/ecp/species/2891#crithab	Final

Appendix B CRLF and California Tiger Salamander Site Assessment

SITE ASSESSMENT FOR CALIFORNIA RED-LEGGED FROG AND CALIFORNIA TIGER SALAMANDER

PANOCHE ROAD BRIDGE (NO. 43C-0070)

REPLACEMENT AT TRES PINOS CREEK

SAN BENITO COUNTY, CALIFORNIA

05-SBT-0-CR

FEDERAL PROJECT NO. BRLS-5943 (056)

Caltrans

August 2011

SITE ASSESSMENT FOR CALIFORNIA RED-LEGGED FROG AND CALIFORNIA TIGER SALAMANDER

PANOCHE ROAD BRIDGE (NO. 43C-0070)

REPLACEMENT AT TRES PINOS CREEK

SAN BENITO COUNTY, CALIFORNIA

05-SBT-0-CR

FEDERAL PROJECT NO. BRLS-5943 (056)

Prepared for:
San Benito County Department of Public Works
3220 Southside Road
Hollister, California 95023

For Submittal to:
U.S. Fish and Wildlife Service
2493 Portola Road, Suite B
Ventura, California 93003

California Department of Fish and Game
Central Region
3196 Higuera Street, Suite A
San Luis Obispo, California 93401

Caltrans

August 2011

TABLE OF CONTENTS

1.0 INTRODUCTION 1
1.1 PURPOSE OF ASSESSMENT 1
1.2 ASSESSMENT AREA 1
1.3 PROJECT DESCRIPTION 4
2.0 ASSESSMENT 5
2.1 REGIONAL STATUS 5
2.2 DOCUMENTED OCCURRENCES 5
2.3 HABITATS ON THE PROJECT SITE AND IN THE VICINITY 7
3.0 RESULTS 11
3.1 CALIFORNIA RED-LEGGED FROG 11
3.2 CALIFORNIA TIGER SALAMANDER 11
4.0 REFERENCES 12

FIGURES

Figure 1: Regional Location 2
Figure 2: Project Vicinity on Topographical Base 3
Figure 3: California Red-Legged Frog and California Tiger Salamander CNDDB Records in the Vicinity of the Project Site 6
Figure 4: Potential California Red-Legged Frog Aquatic Habitat Within 1 Mile of the Project Site 8
Figure 5: Potential California Tiger Salamander Aquatic Habitat Within 1.24 Miles of the Project Site 10

APPENDICES

A: RESUMES FOR LAURA BELT AND MIKE TRUEBLOOD
B: CRLF HABITAT SITE ASSESSMENT DATA SHEETS
C: REPRESENTATIVE PHOTOS OF TRES PINOS CREEK

1.0 INTRODUCTION

1.1 PURPOSE OF ASSESSMENT

This report presents an assessment of the status of the California red-legged frog (*Rana aurora draytonii*), the California tiger salamander (*Ambystoma californiense*), and potential habitat for each species on the Panoche Road Bridge Replacement Project (hereafter, project site) and vicinity. This assessment was prepared by Laura Belt and Mike Trueblood, Biologists with LSA Associates, Inc. (LSA) on behalf of San Benito County Department of Public Works.

This assessment follows the protocols outlined in the United States Fish and Wildlife Service (USFWS) Revised Guidance on Site Assessment and Field Surveys for California Red-legged Frogs (August 2005) and the USFWS Interim Guidance on Conducting Site Assessments and Field Surveys for Determining Presence or a Negative Finding of the California Tiger Salamander (October 2003). Accordingly, for California red-legged frog, this assessment documents the records and describes the habitats occurring on the project site and within 1 mile; for California tiger salamander, this assessment describes the habitats within 1.24 miles of the site and documents the records within 3.1 miles of the project site. The assessment also evaluates the potential for each species to occur on the project site.

1.2 ASSESSMENT AREA

The project site is located in central San Benito County within the Panoche Pass 7.5-minute quadrangle, at the eastern base of the Diablo mountain range, and approximately 25 miles southeast of the City of Hollister. Panoche Road crosses over Tres Pinos Creek (No. 43C-0027) approximately 15 miles southeast of the State Highway 25 (Figures 1 and 2) and will be replaced with a new bridge (No. 43C-0070). Panoche Road generally runs east to west and consists of a graded two-lane asphalt roadway. The existing bridge crossing is a narrow single-lane concrete bridge over Tres Pinos Creek.

The project site lies in a largely undeveloped area among rolling hills within the Tres Pinos Creek watershed. Aquatic features in the general vicinity are composed of small ephemeral drainages as well as several stock ponds. Many of the ephemeral drainages are tributary to Tres Pinos Creek. The dominant plant communities on the project site are willow riparian forest, pasture, and ruderal grassland. Primary land uses in the vicinity are rural residences and pasture.

The project site comprises approximately 3.73 acres and is at an elevation of approximately 1,800 feet. The majority of the land in the area is privately owned and appears to be similar to the project site in use and vegetative characteristics.

FIGURE 1

LEGEND

Project Location

0 2.5 5
MILES

SOURCE: ESRI Imagery (4/2008)

I:\QCE1005A\GIS\ba_fig1-reg_loc.mxd (4/25/12)

Panoche Road Bridge (43C-0070) Replacement
at Tres Pinos Creek
05-SBt-0-CR
Federal Project No. BRLS-5943 (056)

Regional Location

FIGURE 2

LEGEND

Project Location

0 1000 2000
FEET

SOURCE: USGS Topo (Panoche Pass 7.5-Minute Quadrangle)

I:\QCE1005A\GIS\ba_fig2-prj_vic_topo.mxd (4/25/12)

Panoche Road Bridge (43C-0070) Replacement
at Tres Pinos Creek
05-SBt-0-CR
Federal Project No. BRLS-5943 (056)

Project Vicinity on Topographic Base

1.3 PROJECT DESCRIPTION

The Panoche Road Bridge Replacement Project (project) will include replacement of the existing single-lane bridge with a bridge consisting of two 12 foot travel lanes with 4 foot shoulders on both sides. The roadway on both sides of the bridge is two lanes. The project would also include up to 400 feet of approach work on either side of the bridge. The current bridge is 86.94 feet long and 15.75 feet wide. The proposed structure would be approximately 132 feet long with a total bridge deck width of approximately 34 feet on a shifted alignment approximately 50 feet downstream of the existing bridge.

2.0 ASSESSMENT

2.1 REGIONAL STATUS

2.1.1 California Red-Legged Frog

The California red-legged frog historically ranged throughout much of the northern Central Valley and the coast range from San Francisco to northern Baja California, Mexico. The California red-legged frog is now absent from 90 percent of its historical range, but is still locally abundant in portions of the San Francisco Bay and the central coast. San Benito County is located within the current range of the California red-legged frog.

The project site is located within California red-legged frog designated critical habitat Unit SNB-2.

2.1.2 California Tiger Salamander

The California tiger salamander ranges through low grasslands and low foothill regions of Central and Northern California. The species occurs from Sonoma, Colusa, and Yolo Counties south through the Central Valley to Tulare County, and through the Coast Range into Santa Barbara County. An isolated population also occurs in Butte County. San Benito County is located within the current range of the California tiger salamander.

The project site is not located within designated critical habitat for California tiger salamander. The nearest critical habitat is Unit eb-16, which is located approximately 10 miles south of the project site along State Highway 25.

2.2 DOCUMENTED OCCURRENCES

2.2.1 California Red-Legged Frog

LSA searched for records of California red-legged frog in the project vicinity by querying the California Natural Diversity Data Base (CNDDB 2011) referencing the Panoche Pass and surrounding 8 quadrangles. The nearest record of California red-legged frog is 0.15 mile upstream of the project site on Tres Pinos Creek (Figure 3). The habitat consists of the creek limits and an adjacent roadside pond with open riparian shoreline. Although there are no other CNDDB records in this area, this species is well-documented in the Tres Pinos Creek watershed. Figure 3 shows records for California red-legged frog in the vicinity of the project site.

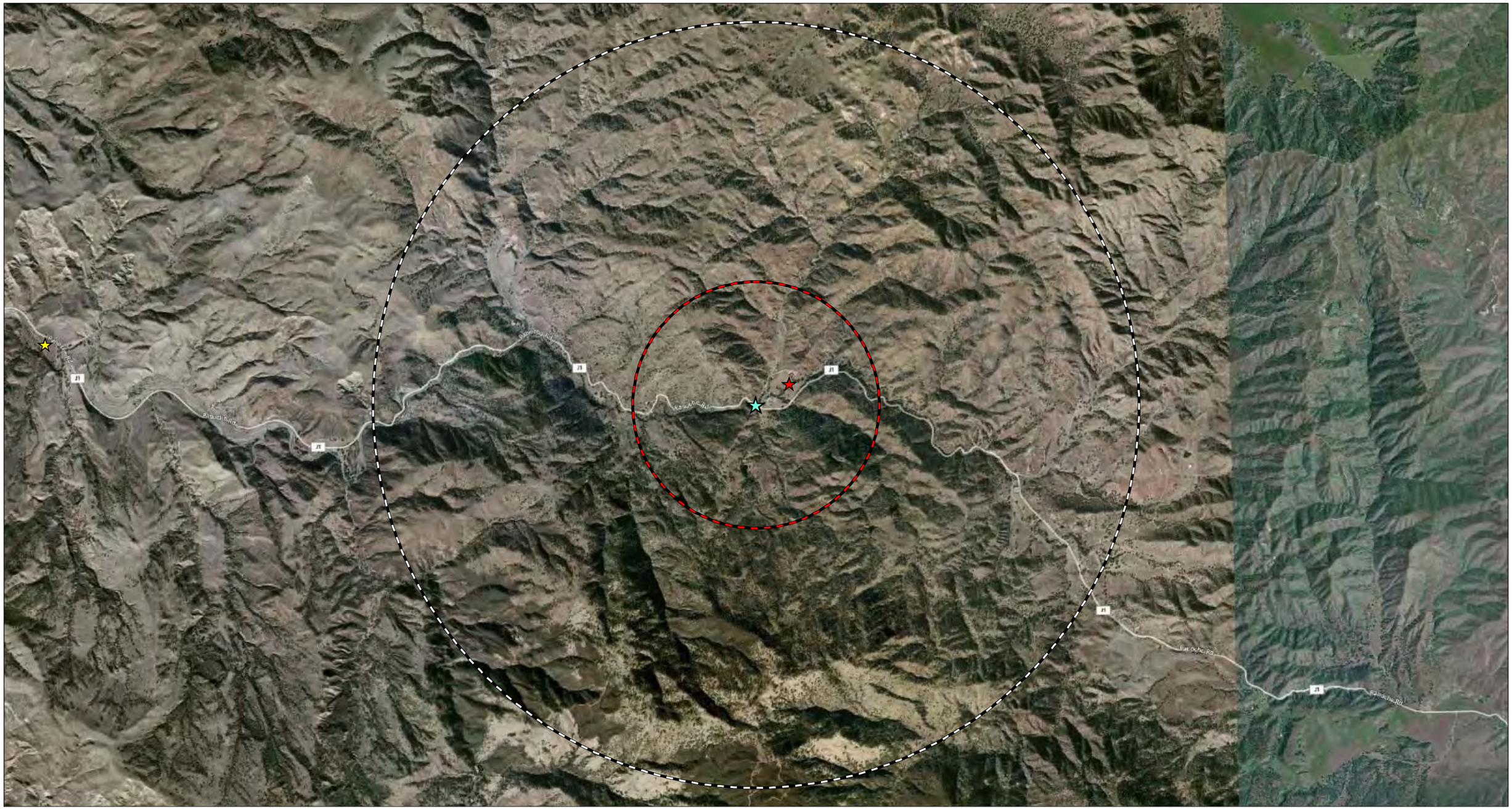

LEGEND

- Project Location
- CRLF 1-Mile Radius
- CTS 3.1-Mile Radius

CNDDB Records (May 2011)

- Ambystoma californiense
- Rana draytonii

0 2000 4000
FEET

SOURCE: ESRI Imagery (2009)

I:\QCE1005A\GIS\fig3-cts-crlf_cnddb.mxd (4/25/12)

FIGURE 3

Panoche Road Bridge (43C-0070) Replacement
at Tres Pinos Creek
05-SBt-0-CR
Federal Project No. BRLS-5943 (056)

CRLF and CTS CNDDB Records
in the Vicinity of the Project Site

2.2.2 California Tiger Salamander

LSA searched for records of California tiger salamander in the project vicinity by querying the California Natural Diversity Data Base (CNDDB 2011) referencing the Panoche Pass and surrounding 8 quadrangles. There are no records of California tiger salamander within 3.1 miles of the project site. The nearest record, dated 2000, is approximately 7.6 miles west of the project site. This record is of an individual California tiger salamander observed along Panoche Road in the vicinity of Tres Pinos Creek. Figure 3 shows records for California tiger salamander in the vicinity of the project site.

2.3 HABITATS ON THE PROJECT SITE AND IN THE VICINITY

LSA biologist Mike Trueblood surveyed the project site and surrounding site vicinity on May 11, 2011. Prior to the survey, aerial photographs of the project site and surrounding lands were reviewed to identify ponds, drainages, and other features that could potentially provide aquatic habitat for California red-legged frog or California tiger salamander. During the survey, LSA biologists surveyed the entire project site, and mapped all suitable aquatic habitats for California red-legged frog or California tiger salamander. Most private lands in the vicinity of the project were inaccessible, but potential habitats for California red-legged frog and California tiger salamander were mapped using an aerial photo.

2.3.1 California Red-Legged Frog - Potential Aquatic Habitat on the Project Site and Within a 1 Mile Radius

California red-legged frogs are considered to be “pond frogs,” adapted to slow moving or still waterbodies such as ponds, pools, and marshes. However, California red-legged frogs also occur in perennial streams. Habitat features typically associated with this species include emergent and overhanging vegetation, and banks containing numerous refugia locations that could conceal adult frogs.

Tres Pinos Creek within the project site supports adequate hydrology and vegetative structure to provide suitable aquatic habitat for California red-legged frogs. It is a perennial creek with pooled areas directly adjacent to the Panoche Road Bridge structure where the water moves at a slower velocity than the rest of the channel. The bed of the live channel is composed of bedrock, rock, cobble, and sand. The edges of the creek have sediment deposited at varying levels; emergent vegetation is fairly dense and grows along the edges and within the live channel. The majority of the canopy cover consists of willow (*Salix* sp.) and a few oaks (*Quercus* sp.); the channel edge and bank are dominated by creeping spike rush (*Eleocharis* sp.), poison oak (*Toxicodendren diversilobum*), California rose (*Rosa californica*), mugwort (*Artemesia* sp.), and other herbaceous vegetation. See the data sheet in Appendix B.

Potential aquatic habitat for California red-legged frog within 1 mile of the project site includes additional reaches of Tres Pinos Creek upstream and downstream of the project site, a few intermittent and ephemeral tributaries, and several stock ponds. The stock ponds appear to be minimally vegetated, though some appear to support overhanging or emergent vegetation. Figure 4 illustrates the distribution of potential aquatic habitat for California red-legged frog on the project site and within a 1 mile radius.

LSA

LEGEND

Project Site

1-Mile Radius

Intermittent and Perennial Streams

Lakes and Ponds

N

0 1000 2000

FEET

SOURCE: ESRI Imagery (2009)

I:\QCE1005A\GIS\fig4_crlf_hab.mxd (4/25/12)

FIGURE 4

Panoche Road Bridge (43C-0070) Replacement
at Tres Pinos Creek
05-SBt-0-CR
Federal Porject No. BRLS-5943 (056)

Potential California Red-Legged Frog
Aquatic Habitat Within 1 Mile of the Project Site

2.3.2 California Tiger Salamander - Potential Aquatic Habitat on the Project Site and Within a 1.24 Mile Radius

The California tiger salamander requires burrows in upland habitat for the majority of the year, in addition to aquatic breeding habitat. Upland habitat favored by this species is generally open grassland or savannahs. California tiger salamanders cannot dig their own burrows and, consequently, are largely dependent on the presence of fossorial mammals such as ground squirrels, though California tiger salamanders can also utilize cracks or crevices in the ground. Breeding habitat consists of natural ephemeral pools, stock ponds, and other small, artificial water bodies, particularly those that dry up in summer.

Tres Pinos Creek is a perennial creek with flows too swift to provide suitable aquatic breeding habitat for the California tiger salamander, even in the slower moving sections of the creek. No other potential aquatic habitat occurs on the project site. Suitable upland habitat is also absent from the project site; though grassland and pasture are present, no suitable burrows or other suitable openings in the ground were observed in the project site.

Several ponds occur within 1.24 miles of the project site that provide potential aquatic habitat for California tiger salamander. Although the ponds are located on private property and were not accessible during the field surveys, review of aerial photos showing these features reveal that several of the ponds within 1.24 miles of the project site are seasonal and could provide suitable aquatic habitat for California tiger salamander. Figure 5 illustrates the distribution of potential aquatic habitat for California tiger salamander within 1.24 miles of the project site.

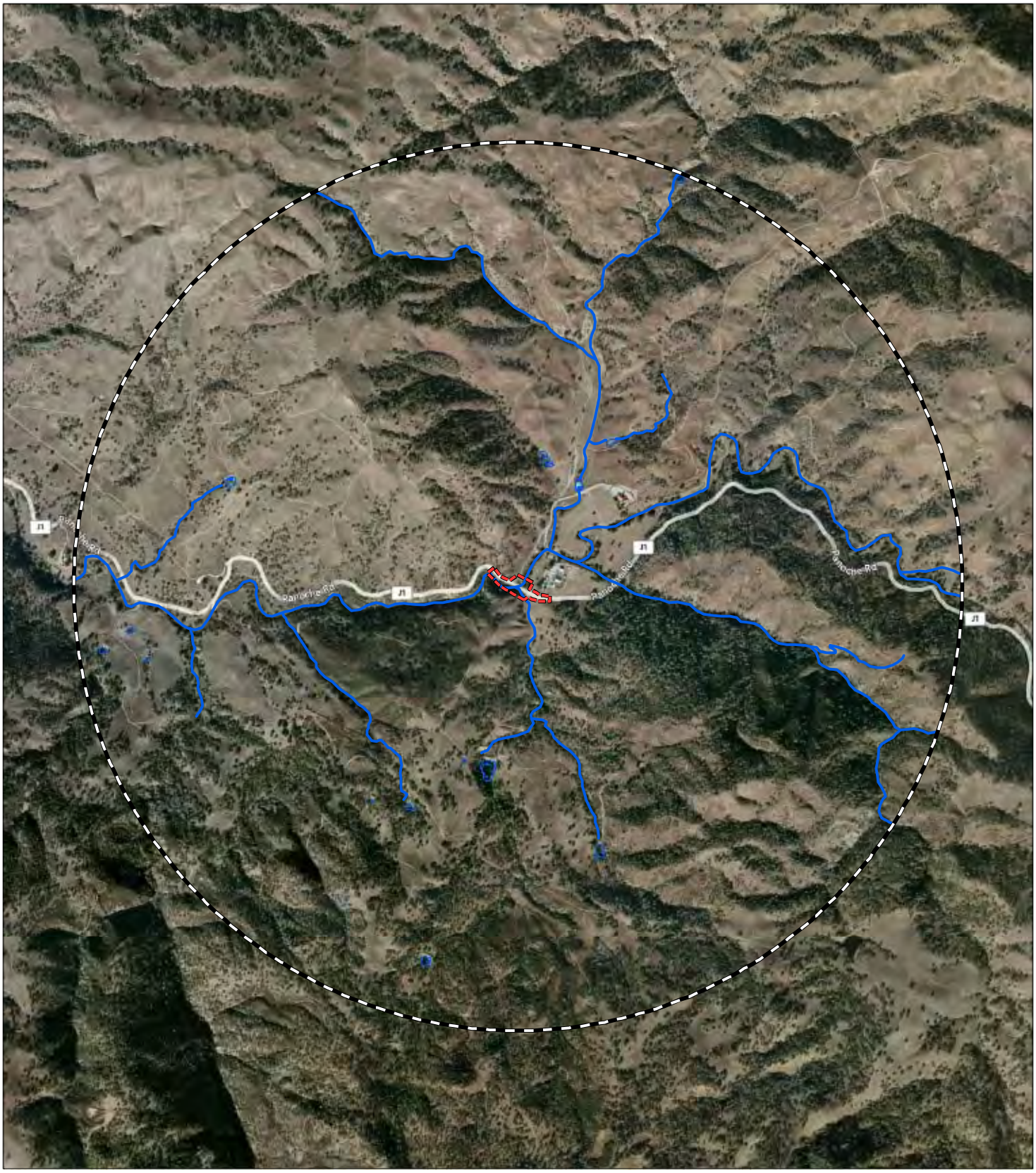

LSA

LEGEND

- Project Site
- 1.24-Mile Radius
- Intermittent and Perennial Streams
- Lakes and Ponds

N

0 1000 2000
FEET

SOURCE: ESRI Imagery (2009)

I:\QCE1005A\GIS\fig5_cts_hab.mxd (4/25/12)

FIGURE 5

Panoche Road Bridge (43C-0070) Replacement
at Tres Pinos Creek
05-SBt-0-CR
Federal Porject No. BRLS-5943 (056)

Potential California Tiger Salammander
Aquatic Habitat Within 1.24 Mile of the Project Site

3.0 RESULTS

3.1 CALIFORNIA RED-LEGGED FROG

The findings of this report are that the California red-legged frogs are potentially present on the project site and in the vicinity based on the following observations:

- The project site is located within the current range of the species;
- There is suitable habitat within the project site for California red-legged frog;
- There are several drainages and ponds in the vicinity of the project site that could provide habitat and a source of migrating individuals;
- There are numerous records of California red-legged frog in the vicinity.

3.2 CALIFORNIA TIGER SALAMANDER

The findings of this report are that California tiger salamanders are not likely to be present on the project site, but may be present in the vicinity based on the following observations:

- Although the project site is located within the current range of the species, there is no suitable aquatic or upland habitat for California tiger salamander on the project site;
- There are no records of California tiger salamander within 3.1 miles of the project site;
- There is potentially suitable aquatic and upland habitat in the vicinity of the project site.

4.0 REFERENCES

California Department of Fish and Game. 2011. Rarefind 3 personal computer program. Sacramento, CA. Records search executed May 3, 2011 and July 19, 2011. Sacramento, California.

Jennings, M. R., and M. P. Hayes. 1994. Amphibian and Reptile Species of Special Concern in California. Final report to the California Dept. of Fish and Game, Inland Fisheries Division, Rancho Cordova. Contract No. 8023.

U.S. Fish and Wildlife Service (USFWS). 2001. Endangered and Threatened Wildlife and Plants; Final Determinations of Critical Habitat for the California Red-legged Frog; Final Rule. March 13, 2001. Federal Register 66:14625-14674.

———. 2002. Recovery Plan for the California Red-legged Frog (*Rana aurora draytonii*). Portland, Oregon. May 2002. 173pp.

———. 2003. *Interim Guidance on Site Assessment and Field Surveys for Determining Presence or a Negative Finding of the California Tiger Salamander*. USFWS, California/Nevada Operations Office, Sacramento, CA and California Department of Fish and Game, Office of the Director, Sacramento, CA.

———. 2004. Endangered and Threatened Wildlife and Plants; Designation of Critical Habitat for the California Tiger Salamander, Central Population; Proposed Rule. *Federal Register* 69: 78570-48649.

———. 2005. *Interim Guidance on Site Assessment and Field Surveys for California Red-legged Frogs*. Sacramento Field Office, Sacramento, CA.

APPENDIX A

RESUMES FOR LAURA BELT AND MIKE TRUEBLOOD

LAURA BELT
WILDLIFE BIOLOGIST

LSA

EXPERTISE

Wildlife Surveys

Sensitive Species Surveys

Biological Construction Monitoring

Environmental Assessment

EDUCATION

California State University, Bakersfield. Bachelor of Science Degree in General Biology, 1989.

PROFESSIONAL AFFILIATIONS

The Wildlife Society

The Audubon Society

PROFESSIONAL RESPONSIBILITIES

Ms. Belt has a diverse background as a wildlife field biologist, which includes 19 years of experience in conducting habitat and wildlife surveys throughout the state. Ms. Belt is responsible for a variety of tasks at LSA, which include biological surveys and construction monitoring of a variety of projects including road work and bridge replacement projects, preparation of biological assessments involving plant and wildlife issues, preparation of 401, 404 and 1600 application material, mitigation plans, and other environmental documentation.

Ms. Belt is also on the Fish and Wildlife Service List of Authorized Individuals to conduct activities with vernal pool tadpole and fairy shrimp and California tiger salamander, as per LSA's Recovery Permit.

Construction monitoring experience includes kit fox, Mojave ground squirrel, western burrowing owl, Swainson's hawk, California red-legged frog, foothill yellow-legged frog, San Francisco garter snake, giant garter snake and valley elderberry longhorn beetle. The following highlights her survey and monitoring experience.

PROJECT EXPERIENCE

Vulcan Sanger Aggregate Mine
Fresno County, California
Conducted preconstruction survey for nesting birds in the limits of the proposed expansion site. Conducted focused surveys for potential VELB habitat, elderberry shrubs (*Sambucus* spp.), in riparian habitat located along the Kings River. Approximately 150 elderberry shrub locations were mapped and stem and exit-hole data was recorded.

River Rock Expansion
Fresno County, California
Conducted preconstruction survey for nesting birds in the limits of the proposed expansion site. Monitored the status of inactive nests in trees via a man –lift (cherry picker).

Academy North On-Call Services
Fresno County, California
Conducted focused survey for western burrowing owl and mapped suitable habitat for California tiger salamander along roadway and right-of-way limits.

PROFESSIONAL EXPERIENCE

Wildlife Biologist, LSA Associates, Inc., Rocklin CA, 2000-Present.

Wildlife Assistant, California Department of Fish and Game, Sacramento CA, 1992-1994, 1999-2000.

Public Relations, San Diego Zoo and Wild Animal Park, 1997-98.

Wildlife Research Assistant, San Diego State Research Foundation, San Diego CA, 1995-1996.

Wildlife Research Assistant, United States Geological Survey, Western Ecological Research Center,

Dixon, CA, and California Department of Fish and Game, Sacramento CA, 1990-94.

PROJECT EXPERIENCE (CONTINUED)

Triangle Rock Products, Inc.
Sacramento County, California
Conducted focused pre-construction surveys for tricolored blackbird and burrowing owl.

- General wildlife surveys, biological reconnaissance survey of proposed project site, and special status species surveys for giant garter snake, Swainson's Hawk, Cooper's Hawk, burrowing owl, white-tailed kite, loggerhead shrike, and northwestern pond turtle.
- Triangle Rock Preserve - Hydrology monitoring and protocol fairy and tadpole shrimp surveying at existing and created vernal pools.

Highway 41 Quarry (Austin Quarry)
Madera County, California
Conducted San Joaquin kit fox and western burrowing owl site assessments for a 300-acre potential quarry site. Mapped and monitored burrowing owls habitat use and movement, before and after the nesting season. Project site also included vernal pools and California tiger salamander habitat.

San Luis Obispo Creek Enhancement Project
San Luis Obispo County, California
Conducted preconstruction and construction monitoring on the San Luis Obispo Creek Enhancement project site, located north of the City of San Luis Obispo and west of Highway 101. Assisted the Department of Fish and Game in capturing steelhead during dewatering activities.

Coast Rock Company
Bradley, San Luis Obispo County, California
Conducted protocol surveys for San Joaquin kit fox and western burrowing owl, as well as pre-construction and construction monitoring for both species. Focused burrow surveys were also conducted for both species using video-scope camera technology.

Potrero Hills Landfill Study Site
Suisun, Solano County, California
Conduct protocol level surveys for vernal pool crustaceans and focused surveys for California tiger salamander, annually.

Wendt Ranch, Dougherty Valley and Discovery Bay Development
Contra Costa County, California
Monitored the location of western burrowing owls and passive relocation activities, prior to clearing and grading.

PROJECT EXPERIENCE (CONTINUED)

Ventura State Highway 118 Corridor Study
Simi Valley, Ventura County, California
Wildlife surveys using camera, video, and scent station tracking to document the use of highway corridors by wildlife, with a focus on bear, mountain lion, deer, coyote, and bobcat.

SR-92/Retaining Wall and Culvert Construction
Half Moon Bay, California
Pre-construction and construction monitoring for California red-legged frog and San Francisco garter snake, within the Pilarcitos Creek Corridor adjacent to SR-92.

SR-101/West of Bayshore and BART Haul Route Restoration San Francisco Airport
San Francisco, California
Preconstruction and construction monitoring for California red-legged frog and San Francisco garter snake, adjacent to the off-ramp lane to the San Francisco Airport.

Cranmore/Garmire Road Bridge Replacement Project
Sutter County California
Pre-construction and construction monitoring for nesting birds, giant garter snake, burrowing owl and Swainson's hawk near the Sacramento River over a construction season.

SR-65/Bypass
Lincoln, Placer County, California
Inventory and map the location of all native trees within the 14 –mile bypass alignment limits. Conduct preconstruction and construction monitoring of work project creating new roadway and 17 bridges. Monitoring tasks include surveying for Swainson's hawks and other nesting birds, before and during the nesting season.

MIKE TRUEBLOOD
BIOLOGIST

LSA

EXPERTISE

Construction Monitoring

Environmental Assessment/ Biological Assessment

Wetland Delineation

Regulatory Permitting

GIS Graphics Design

EDUCATION

University of California at Davis; Davis, CA. B.S. Wildlife, Fish, and Conservation Biology, 2000.

PROFESSIONAL EXPERIENCE

Biologist, LSA Associates, Inc., Rocklin, CA. June 2002-present.

Environmental Analyst, North State Resources, Sacramento, CA. 2001.

Environmental Monitor/Field Coordinator, Jones & Stokes, Sacramento, CA. 2000.

PROFESSIONAL RESPONSIBILITIES

Mr. Trueblood has been a general biologist at LSA since 2002, with an additional 2 years of professional experience prior to LSA, focusing on biological resources, wetland projects, and construction projects throughout the middle sections of California. Mr. Trueblood's background has involved work in a variety of habitats including oak woodland and savannah, riparian woodland, saltwater marsh, freshwater marsh, vernal marsh, coastal sage and desert scrub, chaparral, and grassland.

Mr. Trueblood is responsible for a variety of biological tasks at LSA, which include biological surveys, sensitive species surveys, habitat assessment, wetland delineation, construction monitoring, regulatory permitting, and GIS graphic design. Environmental analyst tasks include preparation of various environmental documents, water resource, and other application material or mitigation plans.

PROJECT EXPERIENCE

Mr. Trueblood has provided biological and/or permitting services for the following selected projects.

Highway 41 Quarry (Austin Quarry)
Madera County, California
Wetland delineation, habitat mapping, and San Joaquin kit fox and western burrowing owl site assessments for a 300-acre potential quarry site.

Academy North On-Call Services
Fresno County, California
Western burrowing owl focused surveys, habitat mapping and California tiger salamander habitat assessment along roadway and right-of-way limits for a road widening project.

State Route 65 Bypass
Lincoln, California
Wetland delineation and verification for project site and mitigation site, vernal pool hydrology monitoring, GIS graphic design, and construction monitoring.

Triangle Rock Vernal Pool and Laguna Creek Enhancement and Maintenance
Sacramento, California
Biological resource monitoring and long-term maintenance for vernal pool and wetland improvement and restoration mitigation for an aggregate mining project.

PROJECT EXPERIENCE (CONTINUED)

Lone Tree Road Bridge/Cienega Road Bridge
Hollister, California
Biological surveys, wetland delineation, California red-legged frog protocol surveys, and regulatory permitting for two bridge replacement projects.

Amargosa Creek Corridor Development
Palmdale, California
Field surveys including tortoise, burrowing owl, and Mojave ground squirrel. Construction monitoring. 2081 take permit applications.

Mid County Parkway
Perris, California
Field surveys including habitat assessment, protocol sensitive plant surveys, and wetland delineation for the Ramona/Cajalco Expressway widening and realignment.

Wise Road Bridge Replacement
Placer County, California
Biological surveys, Red legged Frog protocol surveys. Wetland delineation, regulatory permitting/coordination and construction monitoring for a bridge replacement project.

North Stockton Railroad Grade Separations and Bridge Replacements
Stockton, California
Habitat assessment, Biological surveys, wetland delineation, and regulatory permitting/coordination for three roadway widening and railroad grade separation projects.

404, 1602, and 401 permitting, Various projects.

GIS Graphic Design, Various projects.

APPENDIX B

CRLF HABITAT SITE ASSESSMENT DATA SHEETS

California Red-legged Frog Habitat Site Assessment Data Sheet #1

Site Assessment reviewed by_____ _____
_____
(FWS Field Office) (date) (biologist)

Date of Site Assessment: 05/11/2011
(mm/dd/yyyy)
Site Assessment Biologists: Trueblood, Mike _____
(Last name) (first name) (Last name) (first name)

_____ _____
(Last name) (first name) (Last name) (first name)

Site Location: Panoche Road Bridge at Tres Pinos Creek, San Benito County
(County, General location name, UTM Coordinates or Lat./Long. or T-R-S).

****ATTACH A MAP** (include habitat types, important features, and species locations)**

Proposed project name: **Panoche Road Bridge Replacement Project**
Brief description of proposed action: **Replace the existing single-lane Panoche Road Bridge with a bridge consisting of two 12 foot travel lanes with four foot shoulders on both sides. The project would also include up to 400 feet of approach work on either side of he bridge.**

1) Is this site within the current or historic range of the CRF (circle one)? YES **X** NO

2) Are there known records of CRF within 1.6 km (1 mi) of the site (circle one)? YES **X** NO
If yes, attach a list of all known CRF records with a map showing all locations. *(See Figure 3)*

GENERAL AQUATIC HABITAT CHARACTERIZATION

(if multiple ponds or streams are within the proposed action area, fill out one data sheet for each)

POND:

Size: _____ Maximum depth: _____

Vegetation: emergent, overhanging, dominant species: _____
_____

Substrate: _____
_____

Perennial or Ephemeral *(circle one).* If ephemeral, date it goes dry: _____

California Red-legged Frog Habitat Site Assessment Data Sheet#1

STREAM:

Bank full width: **40 feet (20 to 30 feet average, and 6 to 12 feet in low flow areas)**

Depth at bank full: **1 to 2 feet on average (1 foot in low flow areas)**

Stream gradient: **Shallow**

Are there pools (circle one)?YES **X** NO

If yes,

Size of stream pools: **6 to 12 feet in width by 10 to 12 feet in length**

Maximum depth of stream pools: **2 feet**

Characterize non-pool habitat: run, riffle, glide, other: **Glide and riffle**

Vegetation: emergent, overhanging, dominant species: **Willow, creeping spike rush, poison oak, and mugwort.**

Substrate: **Bedrock, cobble, rocks, and sand**

Bank description: **Edge of creek and top of bank is vegetated.**

Perennial X or Ephemeral *(circle one)*. If ephemeral, date it goes dry: _____

Other aquatic habitat characteristics, species observations, drawings, or comments:

Perennial creek with pooled areas directly adjacent to the Rocks Road Bridge structure where the water moves at a slower velocity than the rest of the channel. The bed of the live channel is composed of bedrock, rock, cobble, and sand. The edges of the creek have sediment deposited at varying levels; emergent vegetation is fairly dense and grows along the edges and within the live water channel. The majority of the canopy cover consists of willow; the channel edge is dominated by creeping spikerush and the banks are dominated by emergent willow, poison oak, California rose, mugwort, and other herbaceous vegetation.

Necessary Attachments:

1. All field notes and other supporting documents
2. Site photographs

Maps with important habitat features and species location

APPENDIX C

REPRESENTATIVE PHOTOS OF TRES PINOS CREEK

Tres Pinos Creek downstream of the existing bridge.

From the low water crossing north of the bridge looking upstream.

Ephemeral tributary to Tres Pinos Creek southeast of the bridge.

Tres Pinos Creek directly under bridge. Frogs observed at this location.

Caltrans

Panoche Road Bridge (43C-0027) Replacement at Tres Pinos Creek
Federal Project No. BRLO-5943(056)

Representative Photos of Tres Pinos Creek

SOURCE: LSA Associates, Inc. 2011

P:\QCE1005A\Graphics\Rep_photos.pdf (7-25-11)

Appendix C Design Plans

Dist	COUNTY	ROUTE	SHEET No.	TOTAL SHEETS
05	SBt	PANOCHE ROAD	1	35

APPROVED AS TO IMPACT ON STATE FACILITIES AND CONFORMANCE WITH APPLICABLE STATE STANDARDS AND PRACTICES AND THAT TECHNICAL OVERSIGHT WAS PERFORMED.

INDEX OF PLANS

SHEET No.	DESCRIPTION
1	TITLE SHEET
2-4	TYPICAL CROSS SECTIONS
5	LAYOUT
6	PROFILE AND SUPERELEVATION DIAGRAM
7-11	CONSTRUCTION DETAILS
12	DRAINAGE PROFILE
13	DRAINAGE DETAILS
14-16	TRAFFIC HANDLING AND CONSTRUCTION AREA SIGNS
17	RETAINING WALL PLAN
18	EROSION CONTROL DETAILS
19	SUMMARY OF QUANTITIES

STRUCTURE PLANS

20-35 PANOCHE ROAD BRIDGE No. 47C0070

THE STANDARD PLANS LIST APPLICABLE TO THIS CONTRACT IS INCLUDED IN THE NOTICE TO BIDDERS AND SPECIAL PROVISIONS BOOK.

COUNTY OF SAN BENITO

DEPARTMENT OF PUBLIC WORKS

PROJECT PLANS FOR CONSTRUCTION ON

PANOCHE ROAD OVER TRES PINOS CREEK

IN SAN BENITO COUNTY
NEAR HOLLISTER
COUNTY PROJECT # 698
FEDERAL PROJECT # BRLS 5943(056)

TO BE SUPPLEMENTED BY STATE OF CALIFORNIA STANDARD PLANS DATED 2018

PRELIMINARY PLANS
7-12-21

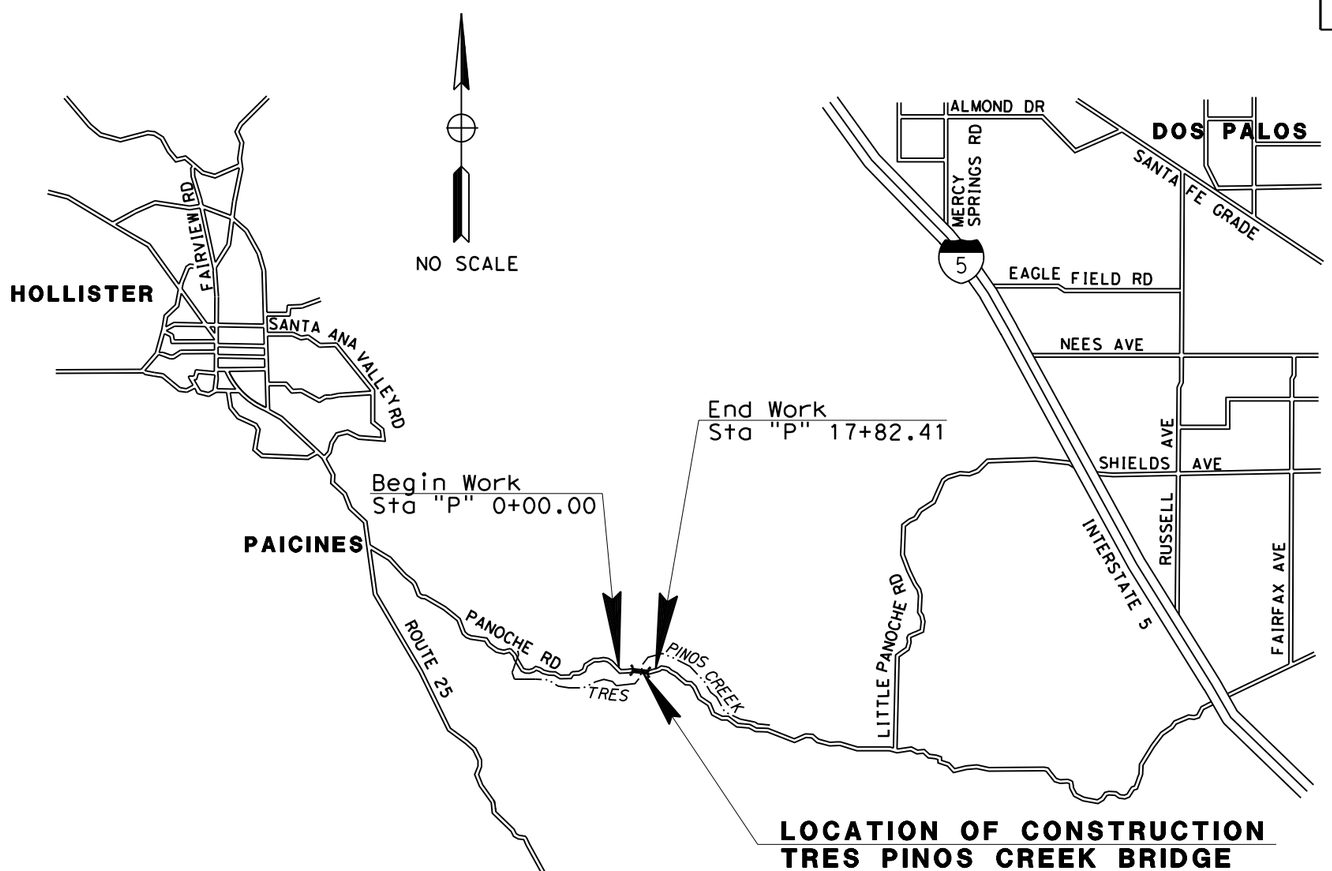

LOCATION OF CONSTRUCTION
TRES PINOS CREEK BRIDGE
Br No. 43C0070

APPROVAL
SAN BENITO COUNTY — DATE

REGISTERED PROFESSIONAL ENGINEER
ARAMN NAZEMI
No. C55927
Exp.
CIVIL
STATE OF CALIFORNIA

PROJECT ENGINEER — DATE
REGISTERED CIVIL ENGINEER

REGISTERED PROFESSIONAL ENGINEER
CAROLYN DAVIS
No. C58440
Exp.
CIVIL
STATE OF CALIFORNIA

PLANS APPROVAL DATE

THE STATE OF CALIFORNIA OR ITS OFFICERS OR AGENTS SHALL NOT BE RESPONSIBLE FOR THE ACCURACY OR COMPLETENESS OF SCANNED COPIES OF THIS PLAN SHEET.

QUINCY ENGINEERING
11017 Cobblerock Drive
Suite 100
Rancho Cordova, CA 95670

San Benito County - Public Works Department
2301 Technology Parkway
Hollister, CA 95023

CONTRACT No.	00-000004
PROJECT ID	0000000000

LAST REVISION 00-00-00 — DATE PLOTTED => 7/13/2021 — TIME PLOTTED => 5:11:17 PM

THE CONTRACTOR SHALL POSSESS THE CLASS (OR CLASSES) OF LICENSE AS SPECIFIED IN THE "NOTICE TO BIDDERS."

NOTES:

1. DIMENSIONS OF THE PAVEMENT SECTIONS (STRUCTURAL SECTION) ARE SUBJECT TO TOLERANCES SPECIFIED IN THE STANDARD SPECIFICATIONS.
2. SUPERELEVATIONS ARE SHOWN ON THE SUPERELEVATION DIAGRAMS, OR AS DIRECTED BY THE ENGINEER.
3. CONSTRUCT SLOPE AND WIDTH AS SHOWN IN STANDARD PLANS FOR MBGR AND TERMINAL SYSTEMS.

ABBREVIATIONS:

SR	SUPERELEVATION RATE
R/W	RIGHT OF WAY

DESIGN DESIGNATION

2010 ADT = 241 T.I. = 6.0
2029 ADT = 429 V = 45 MPH

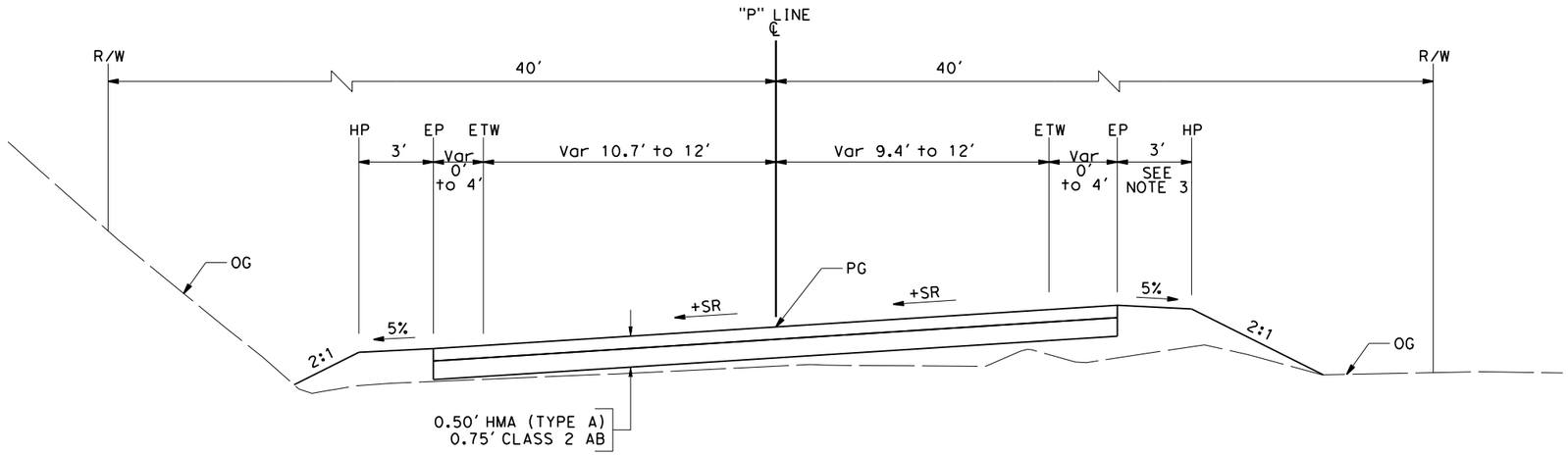

"P" LINE
Sta 10+48.00 TO Sta 11+53.00

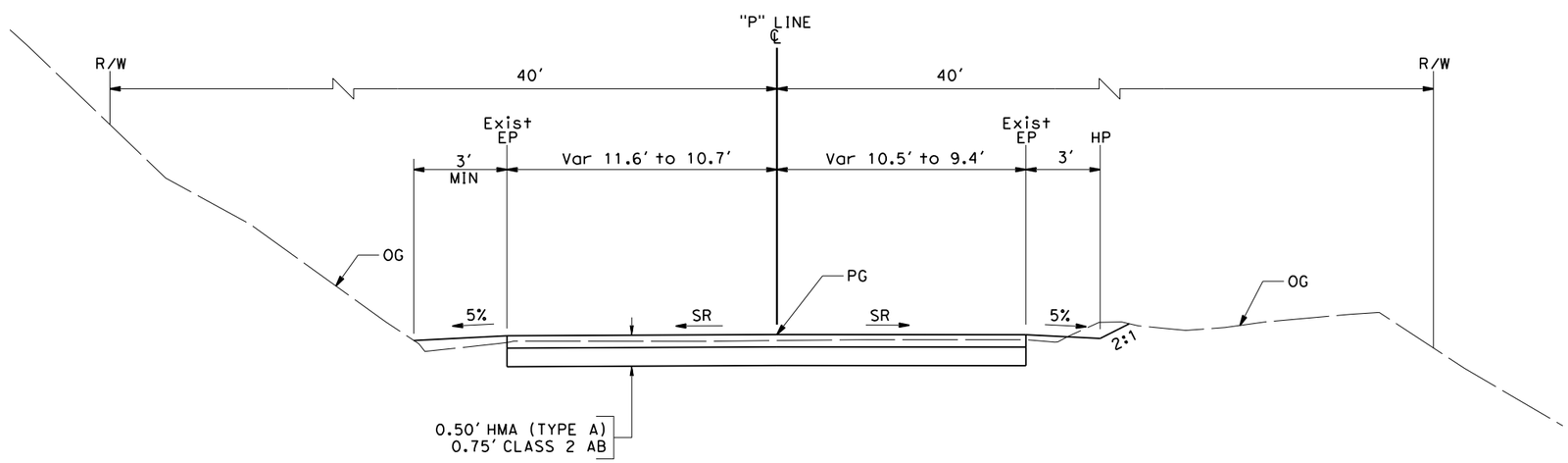

"P" LINE
Sta 10+00.00 TO Sta 10+48.00

Dist	COUNTY	ROUTE	SHEET No.	TOTAL SHEETS
05	SBt	PANOCHE ROAD	2	35

PRELIMINARY PLANS
REGISTERED CIVIL ENGINEER DATE 7/12/21

PLANS APPROVAL DATE

REGISTERED PROFESSIONAL ENGINEER Carolyn Davis No. C58440 Exp. 12/31/22 CIVIL STATE OF CALIFORNIA

THE STATE OF CALIFORNIA OR ITS OFFICERS OR AGENTS SHALL NOT BE RESPONSIBLE FOR THE ACCURACY OR COMPLETENESS OF SCANNED COPIES OF THIS PLAN SHEET.

QUINCY ENGINEERING
11017 Cobblerock Drive
Suite 100
Rancho Cordova, CA 95670

San Benito County - Public Works Department
2301 Technology Parkway
Hollister, CA 95023

REVISED BY: ANDREW MITCHELL
DATE REVISED: 01/22/13
CALCULATED-DESIGNED BY:
CHECKED BY:
PROJECT ENGINEER: CAROLYN DAVIS

SAN BENITO DEPARTMENT OF PUBLIC WORKS
PANOCHE ROAD BRIDGE REPLACEMENT

TYPICAL CROSS SECTIONS

NO SCALE

X-1

LAST REVISION 00-00-00
DATE PLOTTED => 7/13/2021
TIME PLOTTED => 5:11:31 PM

Dist	COUNTY	ROUTE	SHEET No.	TOTAL SHEETS
05	SBt	PANOCHE ROAD	3	35

PRELIMINARY PLANS 7/12/21
REGISTERED CIVIL ENGINEER DATE

PLANS APPROVAL DATE

REGISTERED PROFESSIONAL ENGINEER Carolyn Davis No. C58440 Exp. 12/31/22 CIVIL STATE OF CALIFORNIA

THE STATE OF CALIFORNIA OR ITS OFFICERS OR AGENTS SHALL NOT BE RESPONSIBLE FOR THE ACCURACY OR COMPLETENESS OF SCANNED COPIES OF THIS PLAN SHEET.

QUINCY ENGINEERING 11017 Cobblerock Drive Suite 100 Rancho Cordova, CA 95670

San Benito County - Public Works Department
2301 Technology Parkway
Hollister, CA 95023

NOTES:

1. DIMENSIONS OF THE PAVEMENT SECTIONS (STRUCTURAL SECTION) ARE SUBJECT TO TOLERANCES SPECIFIED IN THE STANDARD SPECIFICATIONS.
2. SUPERELEVATIONS ARE SHOWN ON THE SUPERELEVATION DIAGRAMS, OR AS DIRECTED BY THE ENGINEER.

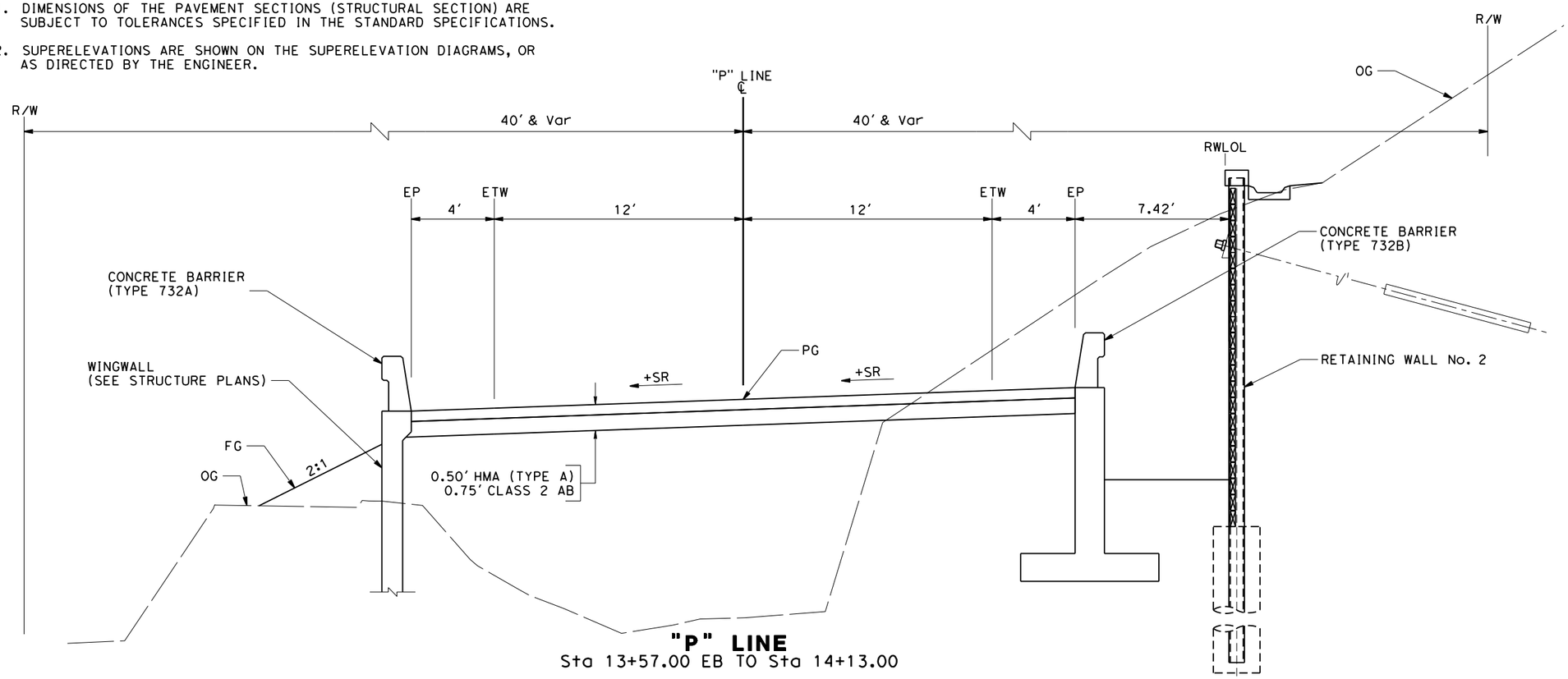

"P" LINE
Sta 13+57.00 EB TO Sta 14+13.00

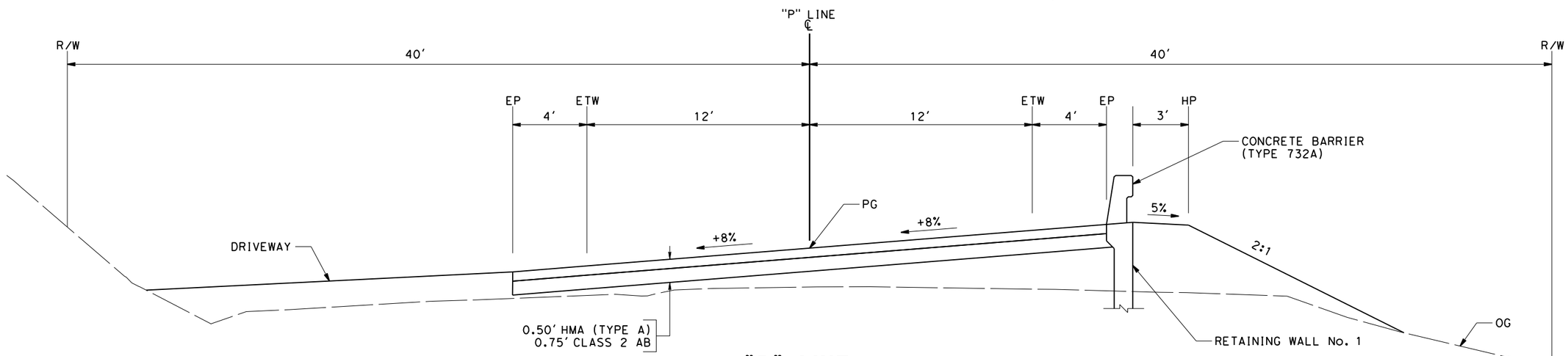

"P" LINE
Sta 11+53.00 TO Sta 12+25.00 BB

TYPICAL CROSS SECTIONS

NO SCALE

X-2

REVISED BY	DATE REVISED
ANDREW MITCHELL	01/22/13

CALCULATED-DESIGNED BY: ANDREW MITCHELL
CHECKED BY:
PROJECT ENGINEER: CAROLYN DAVIS

SAN BENITO DEPARTMENT OF PUBLIC WORKS
PANOCHE ROAD BRIDGE REPLACEMENT

LAST REVISION 00-00-00 | DATE PLOTTED => 7/13/2021 | TIME PLOTTED => 5:11:40 PM

Dist	COUNTY	ROUTE	SHEET No.	TOTAL SHEETS
05	SBt	PANOCHE ROAD	4	35

PRELIMINARY PLANS
REGISTERED CIVIL ENGINEER 7/12/21 DATE

PLANS APPROVAL DATE

REGISTERED PROFESSIONAL ENGINEER Carolyn Davis No. C58440 Exp. 12/31/22 CIVIL STATE OF CALIFORNIA

THE STATE OF CALIFORNIA OR ITS OFFICERS OR AGENTS SHALL NOT BE RESPONSIBLE FOR THE ACCURACY OR COMPLETENESS OF SCANNED COPIES OF THIS PLAN SHEET.

QUINCY ENGINEERING
11017 Cobblerock Drive
Suite 100
Rancho Cordova, CA 95670

San Benito County - Public Works Department
2301 Technology Parkway
Hollister, CA 95023

NOTES:

1. DIMENSIONS OF THE PAVEMENT SECTIONS (STRUCTURAL SECTION) ARE SUBJECT TO TOLERANCES SPECIFIED IN THE STANDARD SPECIFICATIONS.
2. SUPERELEVATIONS ARE SHOWN ON THE SUPERELEVATION DIAGRAMS, OR AS DIRECTED BY THE ENGINEER.
3. CONSTRUCT SLOPE AND WIDTH AS SHOWN IN STANDARD PLANS FOR MBGR AND TERMINAL SYSTEMS.

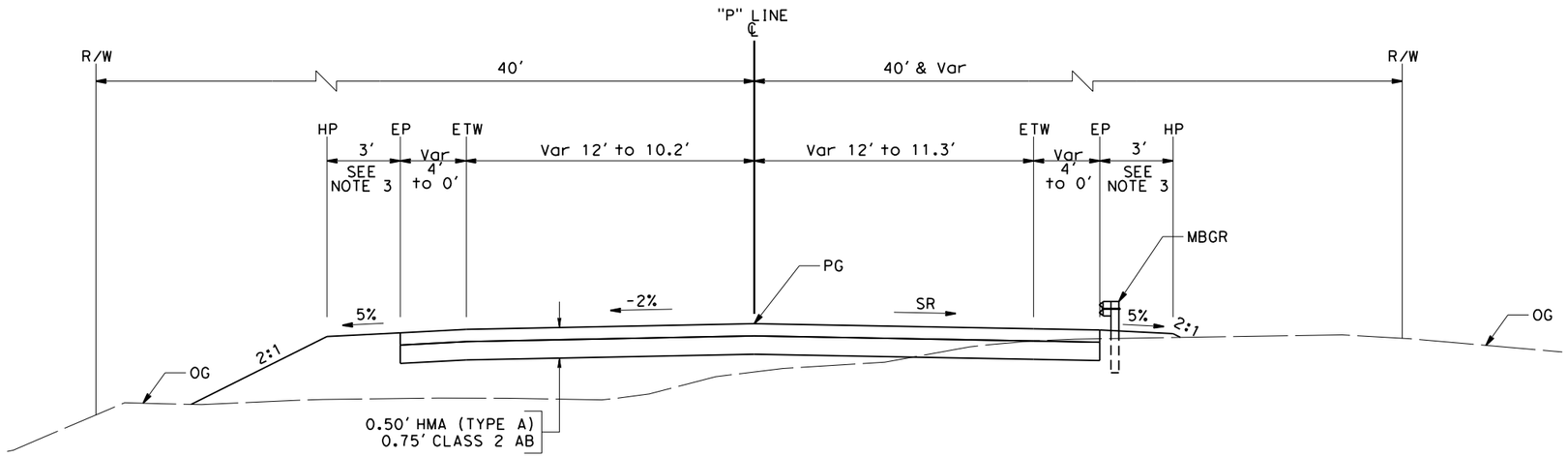

"P" LINE
Sta 14+13.00 TO Sta 16+82.41

TYPICAL CROSS SECTIONS

NO SCALE

X-3

REVISED BY	DATE REVISED
ANDREW MITCHELL	01/22/13

CALCULATED-DESIGNED BY: ANDREW MITCHELL
CHECKED BY:
PROJECT ENGINEER: CAROLYN DAVIS

SAN BENITO DEPARTMENT OF PUBLIC WORKS
PANOCHE ROAD BRIDGE REPLACEMENT

LAST REVISION 00-00-00 | DATE PLOTTED => 7/13/2021 | TIME PLOTTED => 5:11:47 PM

Dist	COUNTY	ROUTE	SHEET No.	TOTAL SHEETS
05	SBt	PANOCHE ROAD	5	35

PRELIMINARY PLANS
REGISTERED CIVIL ENGINEER 7/12/21 DATE

PLANS APPROVAL DATE

REGISTERED PROFESSIONAL ENGINEER Carolyn Davis No. C58440 Exp. 12/31/22 CIVIL STATE OF CALIFORNIA

THE STATE OF CALIFORNIA OR ITS OFFICERS OR AGENTS SHALL NOT BE RESPONSIBLE FOR THE ACCURACY OR COMPLETENESS OF SCANNED COPIES OF THIS PLAN SHEET.

QUINCY ENGINEERING
11017 Cobblerock Drive
Suite 100
Rancho Cordova, CA 95670

San Benito County - Public Works Department
2301 Technology Parkway
Hollister, CA 95023

NOTES:

1. FOR COMPLETE RIGHT OF WAY AND ACCURATE ACCESS DATA, SEE RIGHT OF WAY RECORD MAPS AT THE COUNTY OFFICE.
2. FOR "D" LINE DRIVEWAY DETAILS, SEE CONSTRUCTION DETAILS SHEET C-1.
3. ELEVATIONS ARE BASED ON NGVD 29 DATUM.

ABBREVIATIONS:

TCE TEMPORARY CONSTRUCTION EASEMENT

CURVE DATA

No. ◯	R	Δ	T	L
1	650.00′	22°11′50.26″	127.51′	251.82′

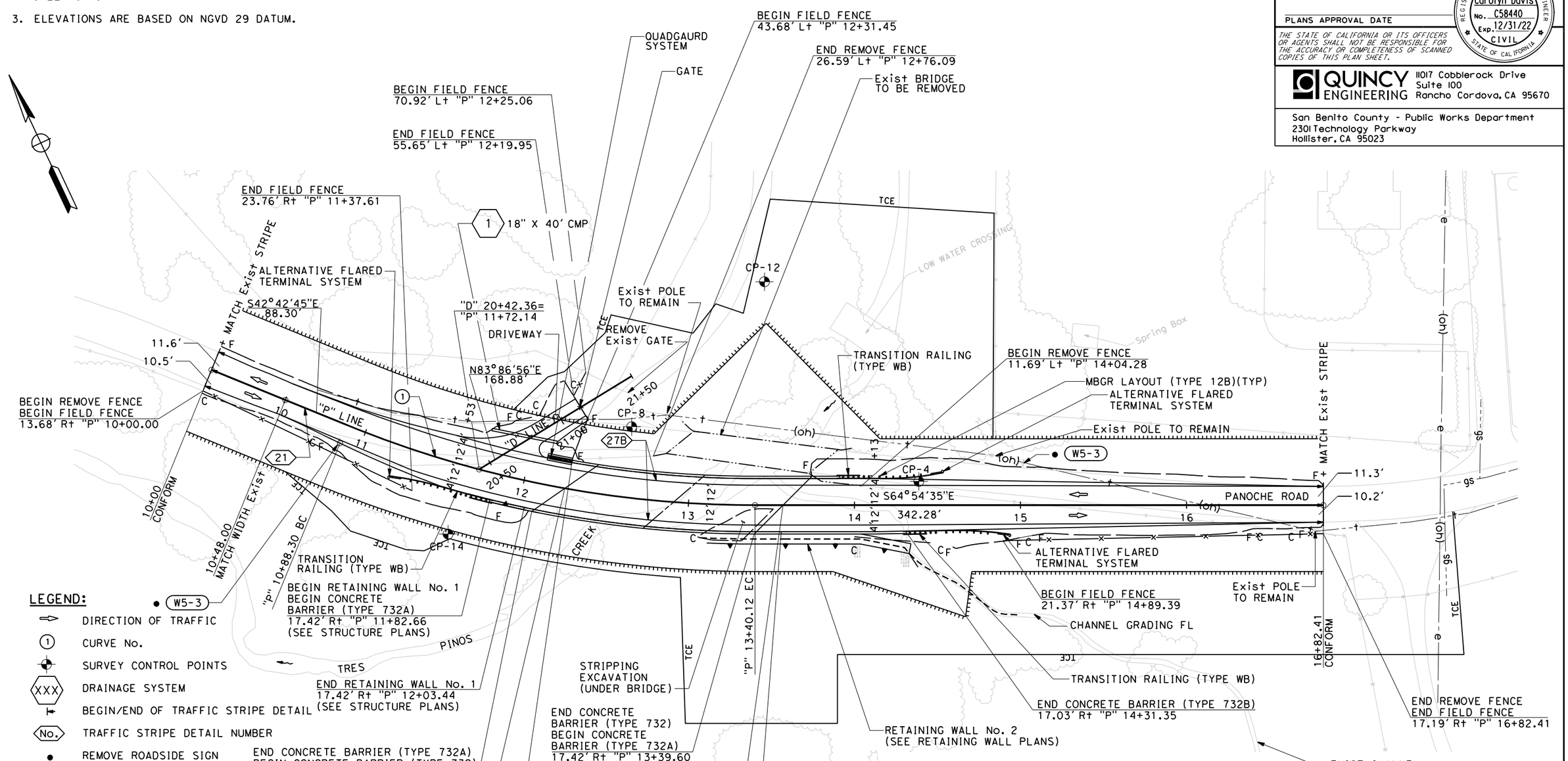

LEGEND:

- DIRECTION OF TRAFFIC
- CURVE No.
- SURVEY CONTROL POINTS
- DRAINAGE SYSTEM
- BEGIN/END OF TRAFFIC STRIPE DETAIL
- TRAFFIC STRIPE DETAIL NUMBER
- REMOVE ROADSIDE SIGN
- EXISTING ROADSIDE SIGN
- ROADSIDE SIGN NUMBER
- CUT LIMIT
- FILL LIMIT
- PROPOSED R/W
- EXISTING OH TELEPHONE UTILITY
- EXISTING GAS UTILITY
- EXISTING OH UTILITY

SURVEY CONTROL DATA

No.	NORTHING	EASTING	ELEV	LINE	STATION	OFFSET	DESCRIPTION
4	2127942.55	5955449.28	1800.07	"P"	14+38.76	14.34′ Lt	MAG NAIL PANEL
8	2128045.67	5955306.64	1796.55	"P"	12+60.42	42.68′ Lt	NAIL/TIN
12	2128090.89	5955416.12	1795.40	"P"	13+45.82	134.61′ Lt	NAIL
14	2128034.01	5955179.07	1800.45	"P"	11+64.48	42.55′ Rt	NAIL

LAYOUT

SCALE: 1"=30′

L-1

REVISED BY	DATE REVISED
ANDREW MITCHELL	01/22/13

CALCULATED-DESIGNED BY
CHECKED BY

PROJECT ENGINEER CAROLYN DAVIS

SAN BENITO DEPARTMENT OF PUBLIC WORKS

PANOCHE ROAD BRIDGE REPLACEMENT

LAST REVISION 00-00-00 DATE PLOTTED => 7/13/2021 TIME PLOTTED => 5:12:01 PM

BORDER LAST REVISED 7/2/2010 | USERNAME => Andrew.Mitchell | DGN FILE => S:\Client\San Benito Cnty\S70-300 Panoche Rd\CAD\roadway\S70300rea001.dgn | RELATIVE BORDER SCALE IN INCHES 0 1 2 3 | UNIT 0000 | PROJECT NUMBER & PHASE 00000000001

Dist	COUNTY	ROUTE	SHEET No.	TOTAL SHEETS
05	SBt	PANOCHE ROAD	6	35

PRELIMINARY PLANS
REGISTERED CIVIL ENGINEER 7/12/21 DATE

PLANS APPROVAL DATE

REGISTERED PROFESSIONAL ENGINEER
Carolyn Davis
No. C58440
Exp. 12/31/22
CIVIL
STATE OF CALIFORNIA

THE STATE OF CALIFORNIA OR ITS OFFICERS OR AGENTS SHALL NOT BE RESPONSIBLE FOR THE ACCURACY OR COMPLETENESS OF SCANNED COPIES OF THIS PLAN SHEET.

QUINCY ENGINEERING
11017 Cobblerock Drive
Suite 100
Rancho Cordova, CA 95670

San Benito County - Public Works Department
2301 Technology Parkway
Hollister, CA 95023

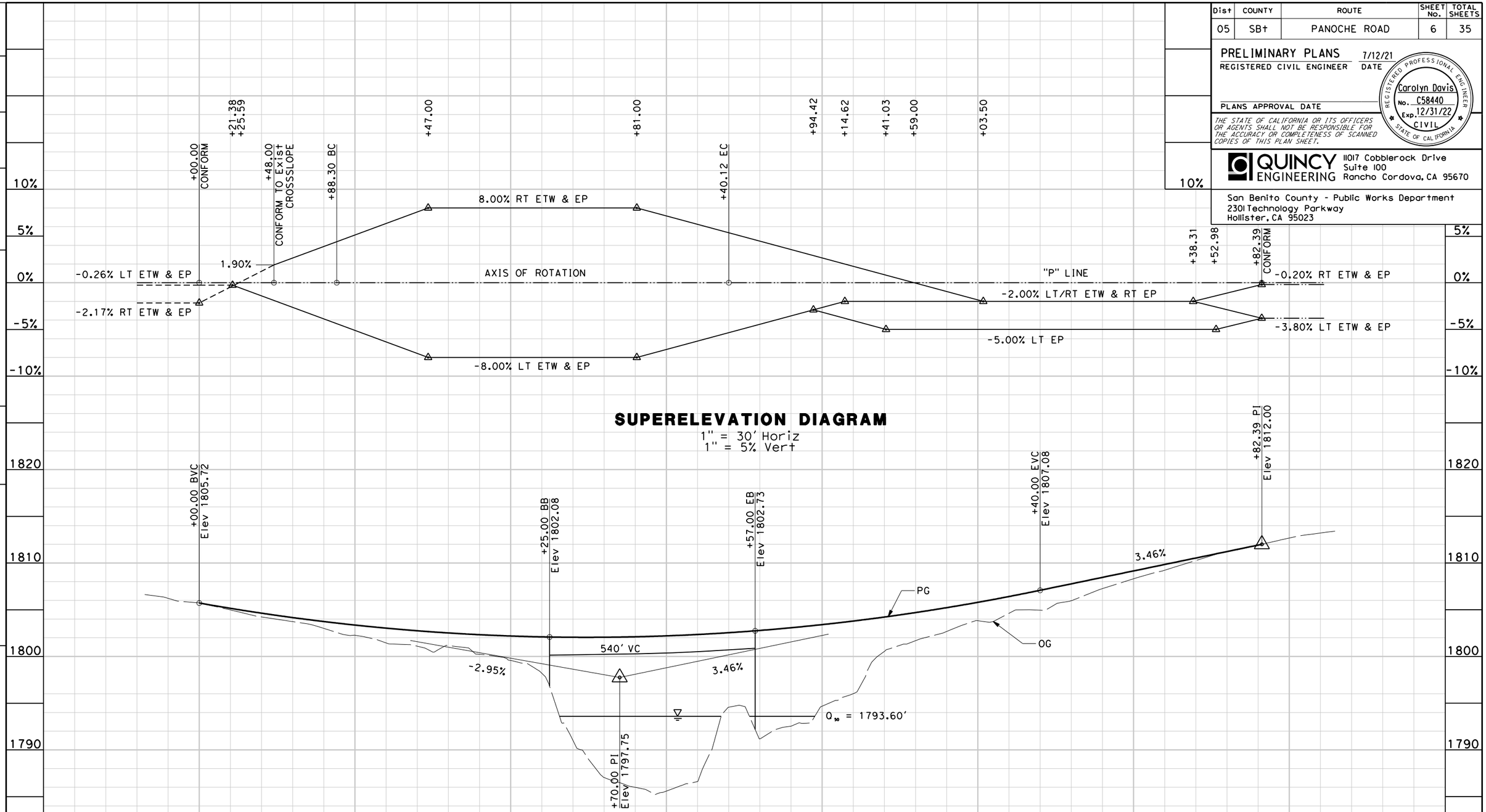

PROFILE AND SUPERELEVATION DIAGRAM

SCALE AS SHOWN

PS-1

STATION	10+00	11+00	12+00	13+00	14+00	15+00	16+00	17+00	TOTAL
CY Exc									
CY Emb									

SAN BENITO DEPARTMENT OF PUBLIC WORKS

PANOCHE ROAD BRIDGE REPLACEMENT

PROJECT ENGINEER: CAROLYN DAVIS

CALCULATED-DESIGNED BY: ANDREW MITCHELL

CHECKED BY

REVISED BY

DATE REVISED: 01/22/13

LAST REVISION: 00-00-00

DATE PLOTTED => 7/13/2021
TIME PLOTTED => 5:12:10 PM

Dist	COUNTY	ROUTE	SHEET No.	TOTAL SHEETS
05	SBt	PANOCHE ROAD	7	35

PRELIMINARY PLANS 7/12/21
REGISTERED CIVIL ENGINEER DATE

PLANS APPROVAL DATE

REGISTERED PROFESSIONAL ENGINEER Carolyn Davis No. C58440 Exp. 12/31/22 CIVIL STATE OF CALIFORNIA

THE STATE OF CALIFORNIA OR ITS OFFICERS OR AGENTS SHALL NOT BE RESPONSIBLE FOR THE ACCURACY OR COMPLETENESS OF SCANNED COPIES OF THIS PLAN SHEET.

QUINCY ENGINEERING
11017 Cobblerock Drive
Suite 100
Rancho Cordova, CA 95670

San Benito County - Public Works Department
2301 Technology Parkway
Hollister, CA 95023

NOTES:

1. FOR PIPE DETAILS, SEE DRAINAGE PLANS.

LEGEND:

(RP) RADIUS POINT

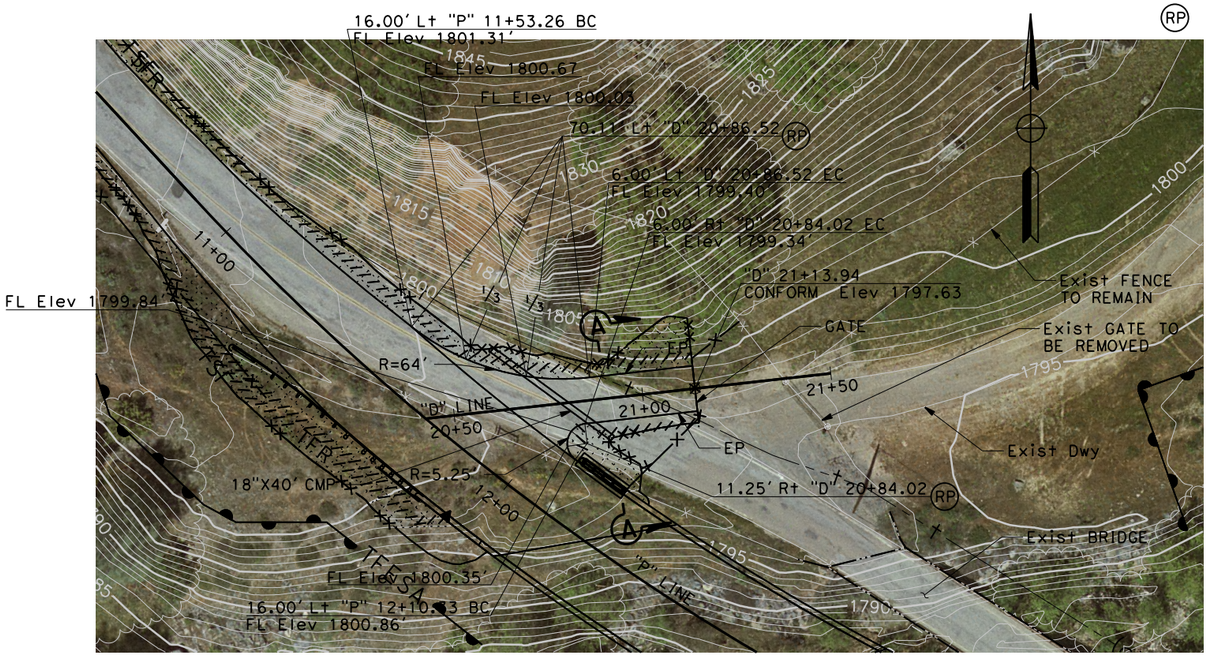

"D" LINE DRIVEWAY

SCALE 1"=20'

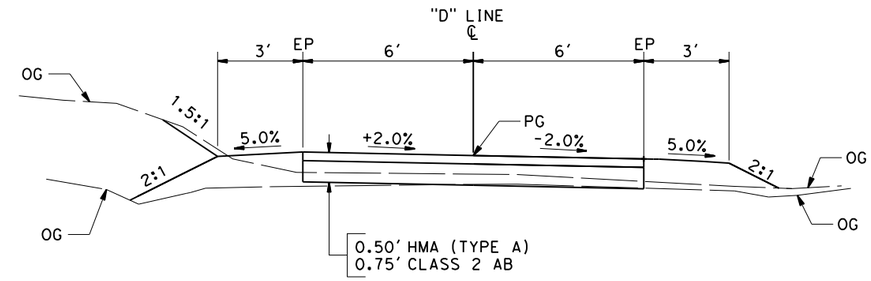

"D" LINE DRIVEWAY SECTION A-A

NO SCALE

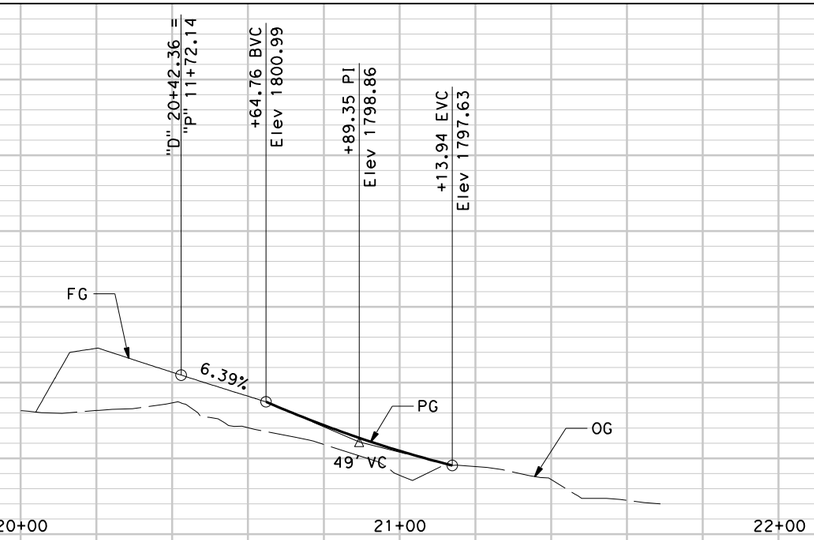

"D" LINE PROFILE

Horiz 1" = 20'
Vert 1" = 4'

CONSTRUCTION DETAILS

SCALE AS SHOWN

C-1

STATION		1810	1800	1790	TOTAL
CY	Exc				
	Emb				

SAN BENITO DEPARTMENT OF PUBLIC WORKS
PANOCHE ROAD BRIDGE REPLACEMENT
PROJECT ENGINEER CAROLYN DAVIS
ANDREW MITCHELL
REVISED BY
DATE REVISED 01/22/13
CALCULATED-DESIGNED BY
CHECKED BY

LAST REVISION 00-00-00
DATE PLOTTED => 7/13/2021
TIME PLOTTED => 5:12:25 PM

Dist	COUNTY	ROUTE	SHEET No.	TOTAL SHEETS
05	SBt	PANOCHE ROAD	8	35

PRELIMINARY PLANS
REGISTERED CIVIL ENGINEER 7/12/21 DATE

REGISTERED PROFESSIONAL ENGINEER
Carolyn Davis
No. C58440
Exp. 12/31/22
CIVIL
STATE OF CALIFORNIA

PLANS APPROVAL DATE

THE STATE OF CALIFORNIA OR ITS OFFICERS OR AGENTS SHALL NOT BE RESPONSIBLE FOR THE ACCURACY OR COMPLETENESS OF SCANNED COPIES OF THIS PLAN SHEET.

QUINCY ENGINEERING
11017 Cobblerock Drive
Suite 100
Rancho Cordova, CA 95670

San Benito County - Public Works Department
2301 Technology Parkway
Hollister, CA 95023

NOTES:

1. FOR QUADGUARD SYSTEM DETAILS NOT SHOWN, SEE MANUFACTURER SPECIFICATIONS.
2. FOR STRIPPING EXCAVATION LOCATION, SEE CONSTRUCTION DETAILS SHEET C-3.

DESIGN SPEED (MPH)	NO. OF BAYS	UNIT EFFECTIVE LENGTH	PAD LENGTH
45	4	14'-8"	15'-0"

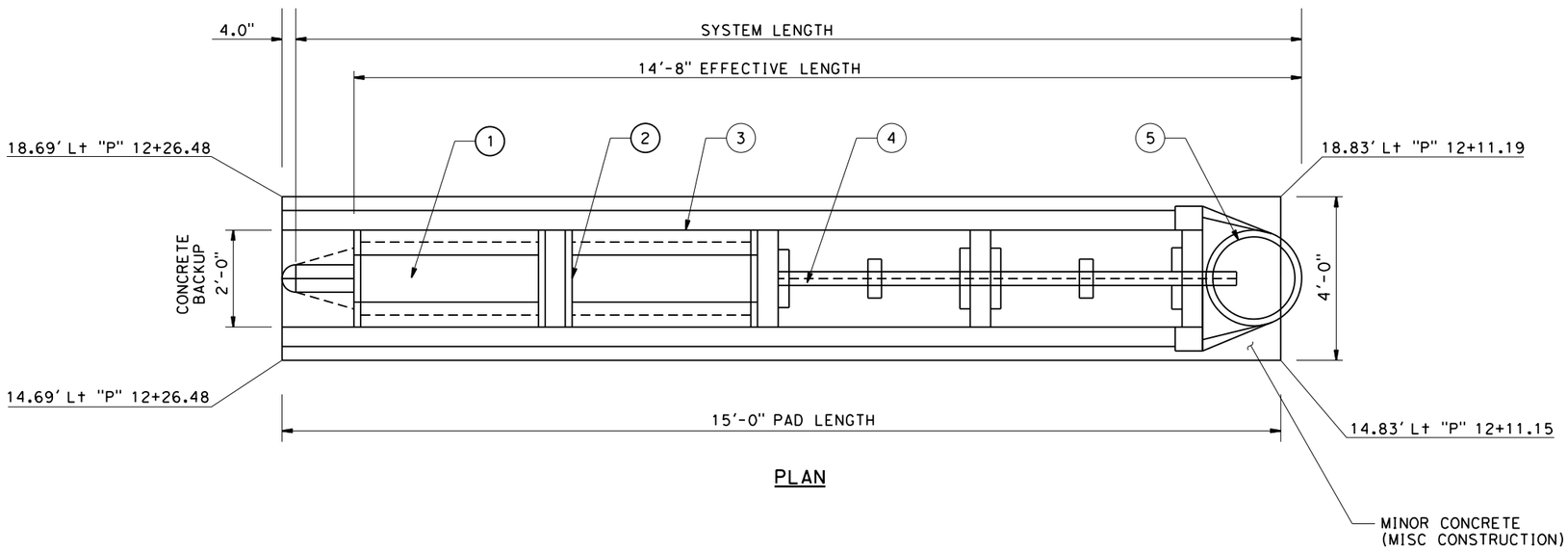

PLAN

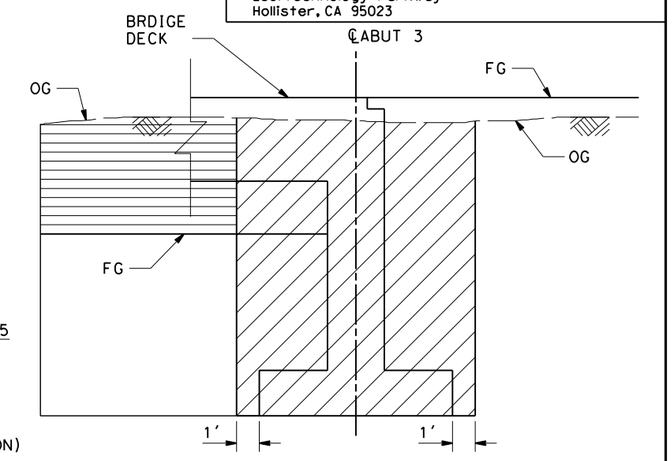

STRIPPING EXCAVATION
SEE NOTE 2

LEGEND:

ROADWAY EXCAVATION

STRUCTURE EXCAVATION

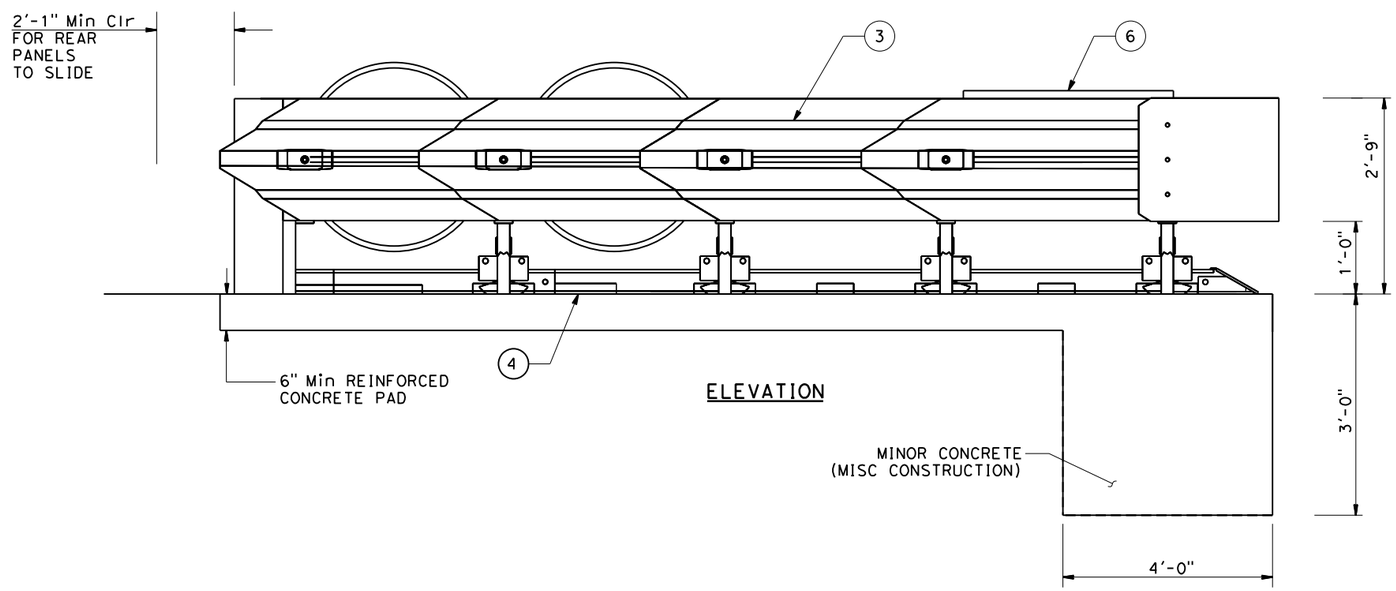

ELEVATION

KEY:

1. QUADGUARD CYLINDER
2. DIAPHRAGM
3. FENDER PANEL
4. MONORAIL
5. NOSE ASSEMBLY
6. HIT INDICATOR

QUADGUARD SYSTEM

CONSTRUCTION DETAILS
NO SCALE

C-2

SAN BENITO DEPARTMENT OF PUBLIC WORKS
PANOCHE ROAD BRIDGE REPLACEMENT

PROJECT ENGINEER: CAROLYN DAVIS
CALCULATED-DESIGNED BY: ANDREW MITCHELL
CHECKED BY
REVISED BY
DATE REVISED: 01/22/13

LAST REVISION 00-00-00
DATE PLOTTED => 7/13/2021
TIME PLOTTED => 5:12:33 PM

Dist	COUNTY	ROUTE	SHEET No.	TOTAL SHEETS
05	SBt	PANOCHE ROAD	9	35

PRELIMINARY PLANS
REGISTERED CIVIL ENGINEER 7/12/21 DATE

PLANS APPROVAL DATE

REGISTERED PROFESSIONAL ENGINEER
Carolyn Davis
No. C58440
Exp. 12/31/22
CIVIL
STATE OF CALIFORNIA

THE STATE OF CALIFORNIA OR ITS OFFICERS OR AGENTS SHALL NOT BE RESPONSIBLE FOR THE ACCURACY OR COMPLETENESS OF SCANNED COPIES OF THIS PLAN SHEET.

QUINCY ENGINEERING
11017 Cobblerock Drive
Suite 100
Rancho Cordova, CA 95670

San Benito County - Public Works Department
2301 Technology Parkway
Hollister, CA 95023

NOTES:

1. THIS PLAN ACCURATE FOR EROSION CONTROL ONLY
2. FENCE LOCATIONS ARE APPROXIMATE. ACTUAL LOCATIONS TO BE DETERMINED BY THE ENGINEER.

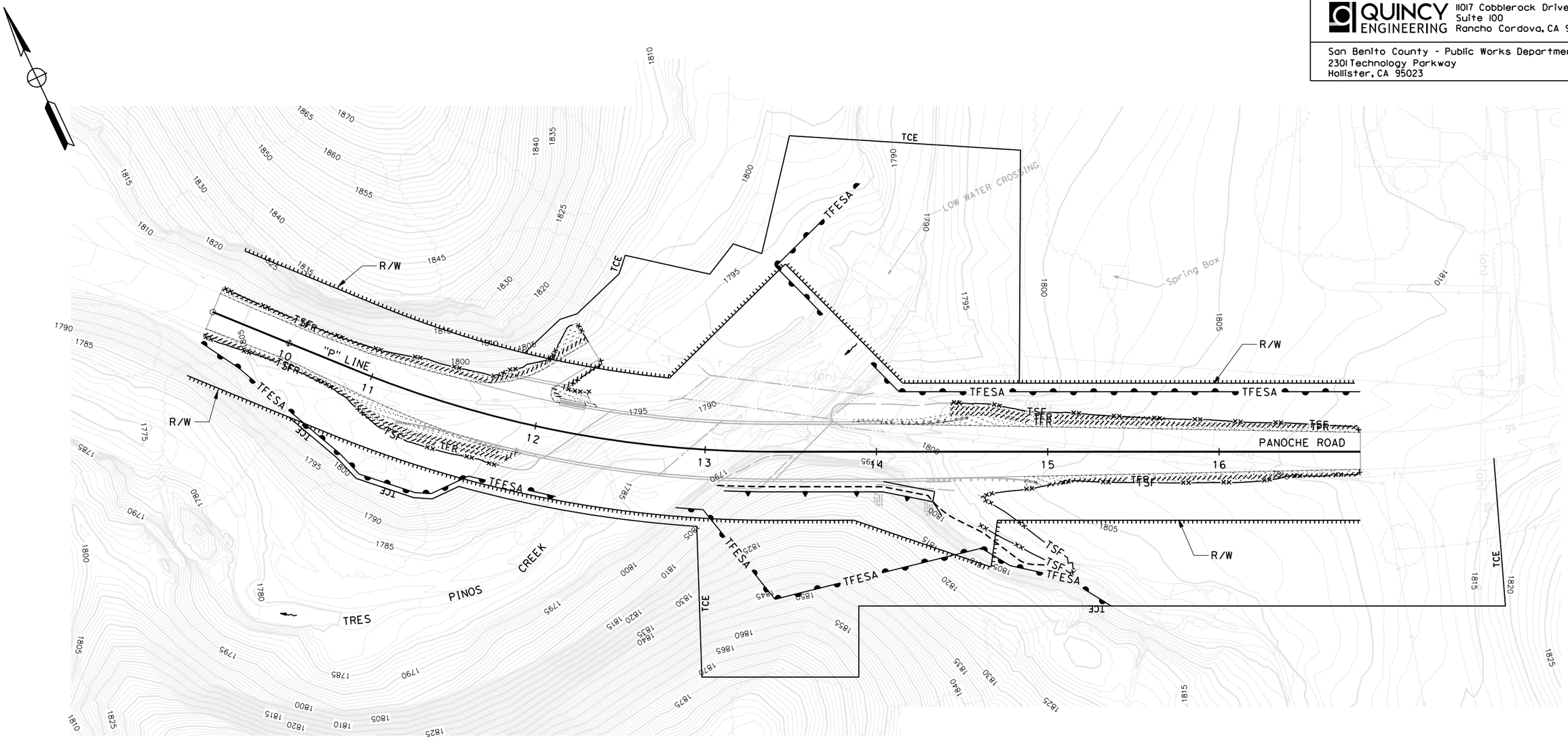

LEGEND:

- TFR — TEMPORARY FIBER ROLL
- TSF — TEMPORARY SILT FENCE
- TFESA — TEMPORARY FENCE (TYPE ESA)
- EROSION CONTROL (HYDROSEED)

CONSTRUCTION DETAILS

SCALE: 1"=30'

C-3

REVISED BY	DATE REVISED
ANDREW MITCHELL	01/22/13

CALCULATED-DESIGNED BY
CHECKED BY

PROJECT ENGINEER: CAROLYN DAVIS

SAN BENITO DEPARTMENT OF PUBLIC WORKS

PANOCHE ROAD BRIDGE REPLACEMENT

LAST REVISION 00-00-00
DATE PLOTTED => 7/13/2021
TIME PLOTTED => 5:12:50 PM

Dist	COUNTY	ROUTE	SHEET No.	TOTAL SHEETS
05	SBt	PANOCHE ROAD	10	35

PRELIMINARY PLANS
REGISTERED CIVIL ENGINEER 7/12/21 DATE

PLANS APPROVAL DATE

REGISTERED PROFESSIONAL ENGINEER Carolyn Davis No. C58440 Exp. 12/31/22 CIVIL STATE OF CALIFORNIA

THE STATE OF CALIFORNIA OR ITS OFFICERS OR AGENTS SHALL NOT BE RESPONSIBLE FOR THE ACCURACY OR COMPLETENESS OF SCANNED COPIES OF THIS PLAN SHEET.

QUINCY ENGINEERING
11017 Cobblerock Drive
Suite 100
Rancho Cordova, CA 95670

San Benito County - Public Works Department
2301 Technology Parkway
Hollister, CA 95023

NOTES:

1. THIS PLAN ACCURATE FOR CONTOUR GRADING WORK AND RSP ONLY.
2. PLACE RSP AT SPECIFIED LOCATION, IF BEDROCK IS ENCOUNTERED WITHIN EXCAVATION LIMITS, PLACE RSP AND FABRIC DIRECTLY ON BEDROCK.
3. FOR SECTION D-D & E-E, SEE CONSTRUCTION DETAILS ON NEXT SHEET.

LEGEND:

- LIMITS OF RSP
- DIRECTION OF FLOW LINE
- STRIPPING EXCAVATION
- LIMITS OF RSP (CLASS V, METHOD B)
- LIMITS OF RSP (CLASS VIII, METHOD A)
- LIMITS OF RSP (CLASS III, METHOD B)
- LIMITS OF RSP (CLASS IV, METHOD B)

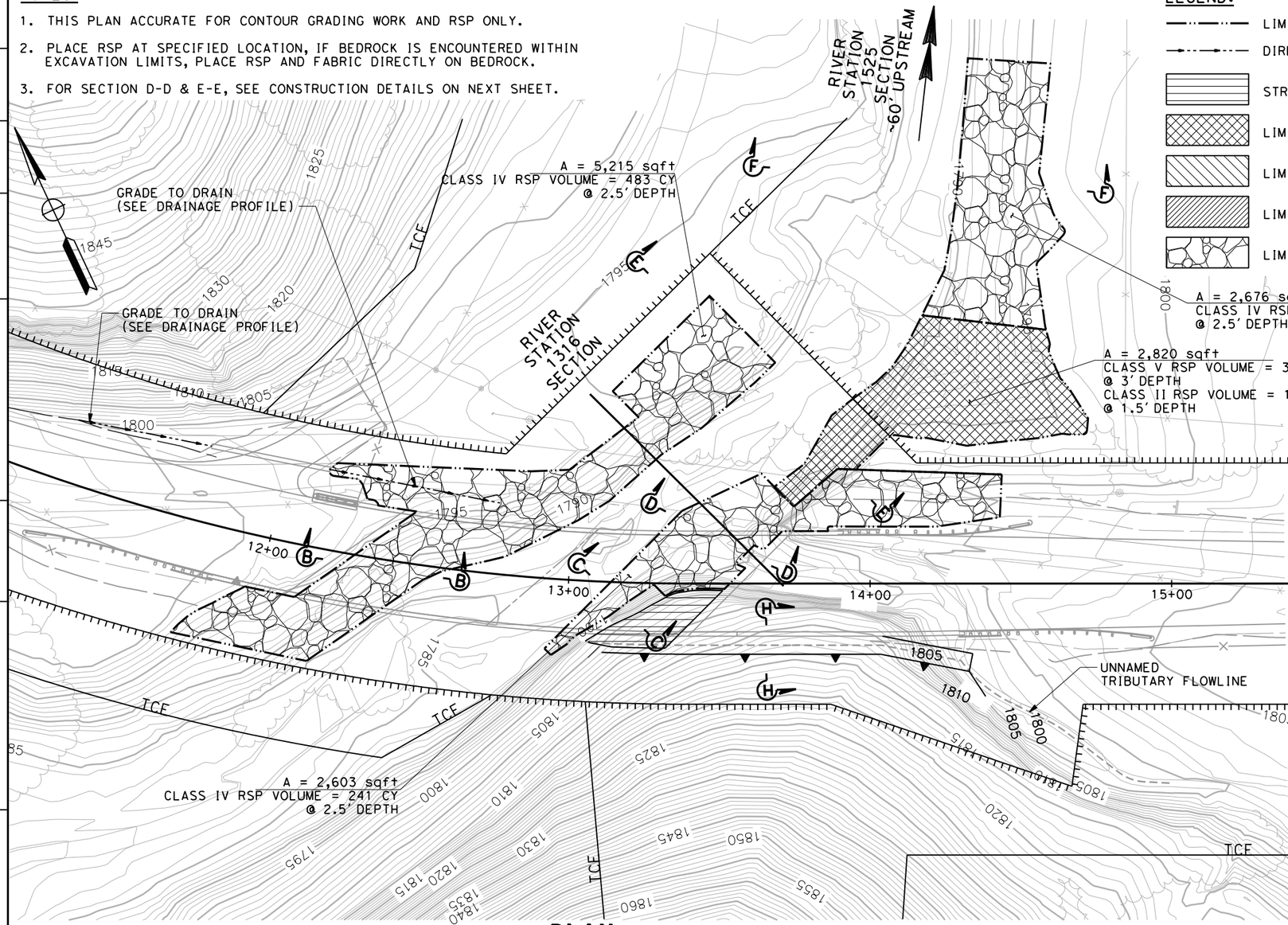

PLAN
1"=20'

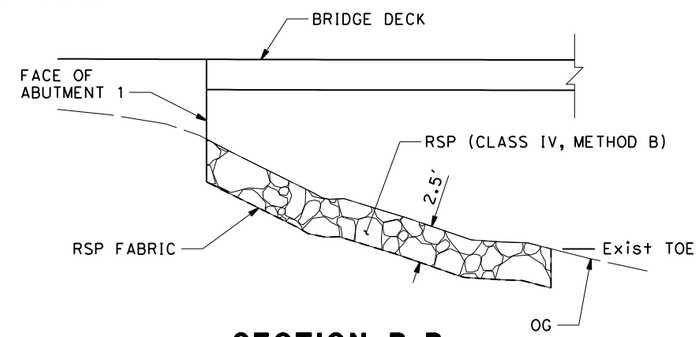

SECTION B-B
NO BEDROCK WITHIN RSP EXCAVATION LIMITS
NO SCALE

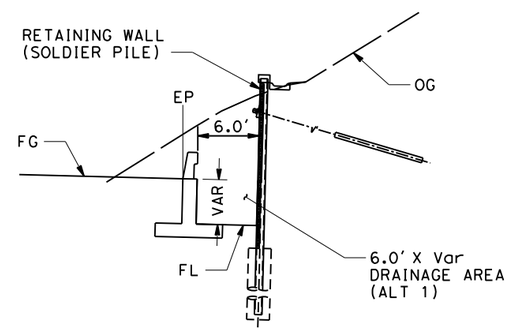

SECTION H-H
NO SCALE

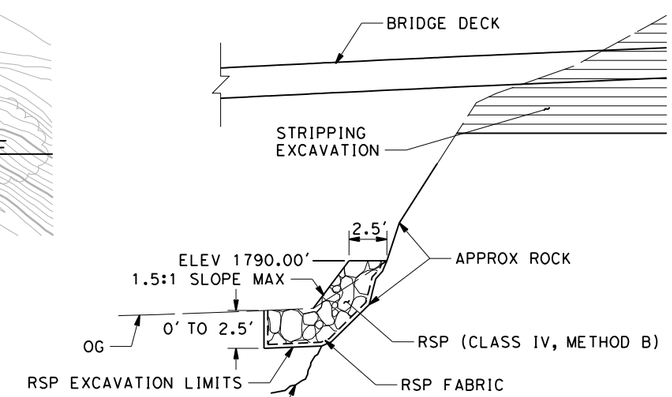

SECTION C-C
RSP ON EXPOSED BEDROCK
NO SCALE
SEE NOTE 2

CONSTRUCTION DETAILS

SCALE AS SHOWN

C-4

REVISED BY	DATE REVISED
ANDREW MITCHELL	01/22/13

CALCULATED-DESIGNED BY
CHECKED BY

PROJECT ENGINEER CAROLYN DAVIS

SAN BENITO DEPARTMENT OF PUBLIC WORKS

PANOCHE ROAD BRIDGE REPLACEMENT

LAST REVISION 00-00-00 | DATE PLOTTED => 7/13/2021 | TIME PLOTTED => 5:13:03 PM

Dist	COUNTY	ROUTE	SHEET No.	TOTAL SHEETS
05	SBt	PANOCHE ROAD		35

PRELIMINARY PLANS 7/12/21
REGISTERED CIVIL ENGINEER DATE

PLANS APPROVAL DATE

REGISTERED PROFESSIONAL ENGINEER Carolyn Davis No. C58440 Exp. 12/31/22 CIVIL STATE OF CALIFORNIA

THE STATE OF CALIFORNIA OR ITS OFFICERS OR AGENTS SHALL NOT BE RESPONSIBLE FOR THE ACCURACY OR COMPLETENESS OF SCANNED COPIES OF THIS PLAN SHEET.

QUINCY ENGINEERING
11017 Cobblerock Drive
Suite 100
Rancho Cordova, CA 95670

San Benito County - Public Works Department
2301 Technology Parkway
Hollister, CA 95023

NOTES:

1. EXCAVATE SOIL 2' BELOW STREAM TO PLACE RSP. IF BEDROCK IS ENCOUNTERED WITHIN RSP EXCAVATION LIMITS, PLACE RSP AND RSP FABRIC DIRECTLY ON BEDROCK. TO BE DETERMINED BY ENGINEER.
2. USE JETTED CLEAN SAND OR HAND TAMPED SAND/GRAVEL MATERIAL TO FILL VOIDS.
3. PLACE RSP AT SPECIFIED LOCATION. IF BEDROCK IS ENCOUNTERED WITHIN RSP EXCAVATION LIMITS, PLACE RSP AND FABRIC DIRECTLY ON BEDROCK.
4. FOR RSP LIMITS AND SECTION D-D, E-E, & F-F LOCATIONS, SEE PLAN VIEW ON PREVIOUS SHEET.

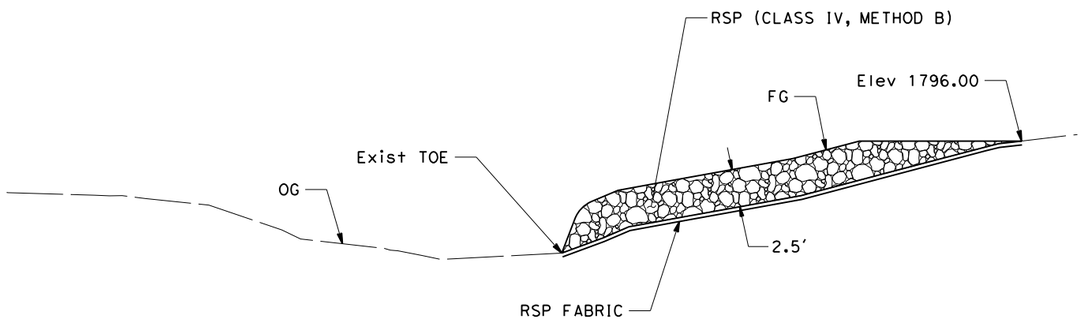

SECTION F-F
NO SCALE

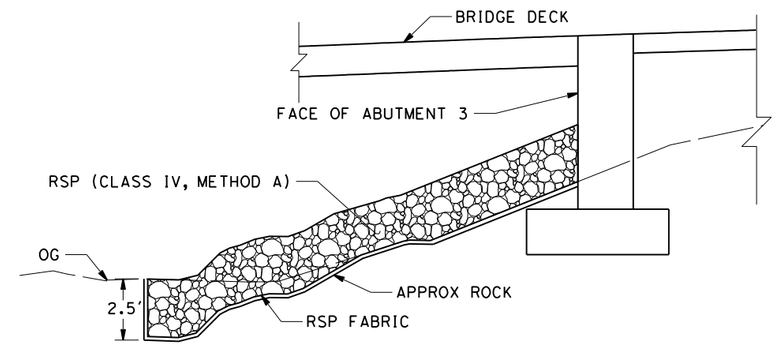

SECTION D-D
SEE NOTE 3
NO SCALE

SECTION E-E
NO SCALE

CONSTRUCTION DETAILS

NO SCALE

C-5

REVISED BY	DATE REVISED
ANDREW MITCHELL	01/22/13

CALCULATED-DESIGNED BY: ANDREW MITCHELL
CHECKED BY:
PROJECT ENGINEER: CAROLYN DAVIS

SAN BENITO DEPARTMENT OF PUBLIC WORKS
PANOCHE ROAD BRIDGE REPLACEMENT

LAST REVISION 00-00-00 | DATE PLOTTED => 7/13/2021 | TIME PLOTTED => 5:13:11 PM

Dist	COUNTY	ROUTE	SHEET No.	TOTAL SHEETS
05	SBt	PANOCHE ROAD	12	35

PRELIMINARY PLANS
REGISTERED CIVIL ENGINEER 7/12/21 DATE

REGISTERED PROFESSIONAL ENGINEER Carolyn Davis No. C58440 Exp. 12/31/22 CIVIL STATE OF CALIFORNIA

PLANS APPROVAL DATE

THE STATE OF CALIFORNIA OR ITS OFFICERS OR AGENTS SHALL NOT BE RESPONSIBLE FOR THE ACCURACY OR COMPLETENESS OF SCANNED COPIES OF THIS PLAN SHEET.

QUINCY ENGINEERING 11017 Cobblerock Drive Suite 100 Rancho Cordova, CA 95670

San Benito County - Public Works Department
2301 Technology Parkway
Hollister, CA 95023

NOTES:

1. THIS PLAN ACCURATE FOR DRAINAGE WORK ONLY.
2. CALL OUTS TO DRAINAGE STRUCTURES ARE REFERENCED TO CENTERLINE OF STRUCTURES AT FLOW LINE.
3. CONTRACTOR SHALL POSITIVELY DETERMINE ALL HORIZONTAL AND VERTICAL LOCATIONS OF ALL UTILITIES PRIOR TO CONSTRUCTION OF ANY COMPONENT OF ANY DRAINAGE SYSTEM IN ORDER TO VERIFY CONSTRUCTABILITY OF THE DRAINAGE SYSTEM AS SHOWN ON PLANS.
4. FOR RSP AND GRADING DETAILS, SEE CONSTRUCTION DETAILS.

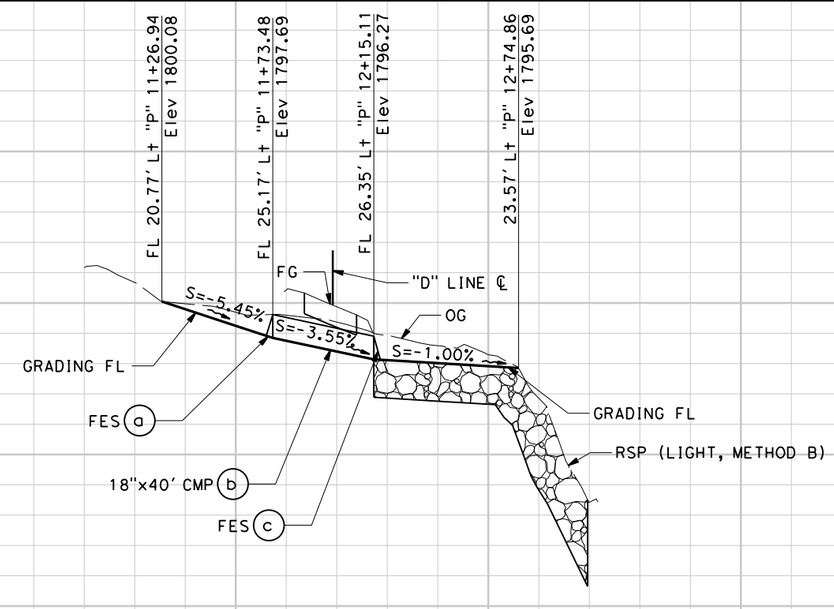

DRAINAGE SYSTEM No. 1
STA "P" 11+26.94 TO 12+74.86

1800 1790 1780 1810 1800 1790 1780

DRAINAGE PROFILE

SCALE: Horiz 1"=30'
Vert 1"=5'

DP-1

STATION		TOTAL
CY	Exc	
	Emb	

REVISED BY | DATE REVISED: 01/22/13
ANDREW MITCHELL
CALCULATED-DESIGNED BY | CHECKED BY
PROJECT ENGINEER: CAROLYN DAVIS
SAN BENITO DEPARTMENT OF PUBLIC WORKS
PANOCHE ROAD BRIDGE REPLACEMENT

LAST REVISION 00-00-00 | DATE PLOTTED => 7/13/2021 | TIME PLOTTED => 5:13:19 PM

Dist	COUNTY	ROUTE	SHEET No.	TOTAL SHEETS
05	SBt	PANOCHE ROAD	13	35

PRELIMINARY PLANS 7/12/21
REGISTERED CIVIL ENGINEER DATE

PLANS APPROVAL DATE

REGISTERED PROFESSIONAL ENGINEER Carolyn Davis No. C58440 Exp. 12/31/22 CIVIL STATE OF CALIFORNIA

THE STATE OF CALIFORNIA OR ITS OFFICERS OR AGENTS SHALL NOT BE RESPONSIBLE FOR THE ACCURACY OR COMPLETENESS OF SCANNED COPIES OF THIS PLAN SHEET.

QUINCY ENGINEERING
11017 Cobblerock Drive
Suite 100
Rancho Cordova, CA 95670

San Benito County - Public Works Department
2301 Technology Parkway
Hollister, CA 95023

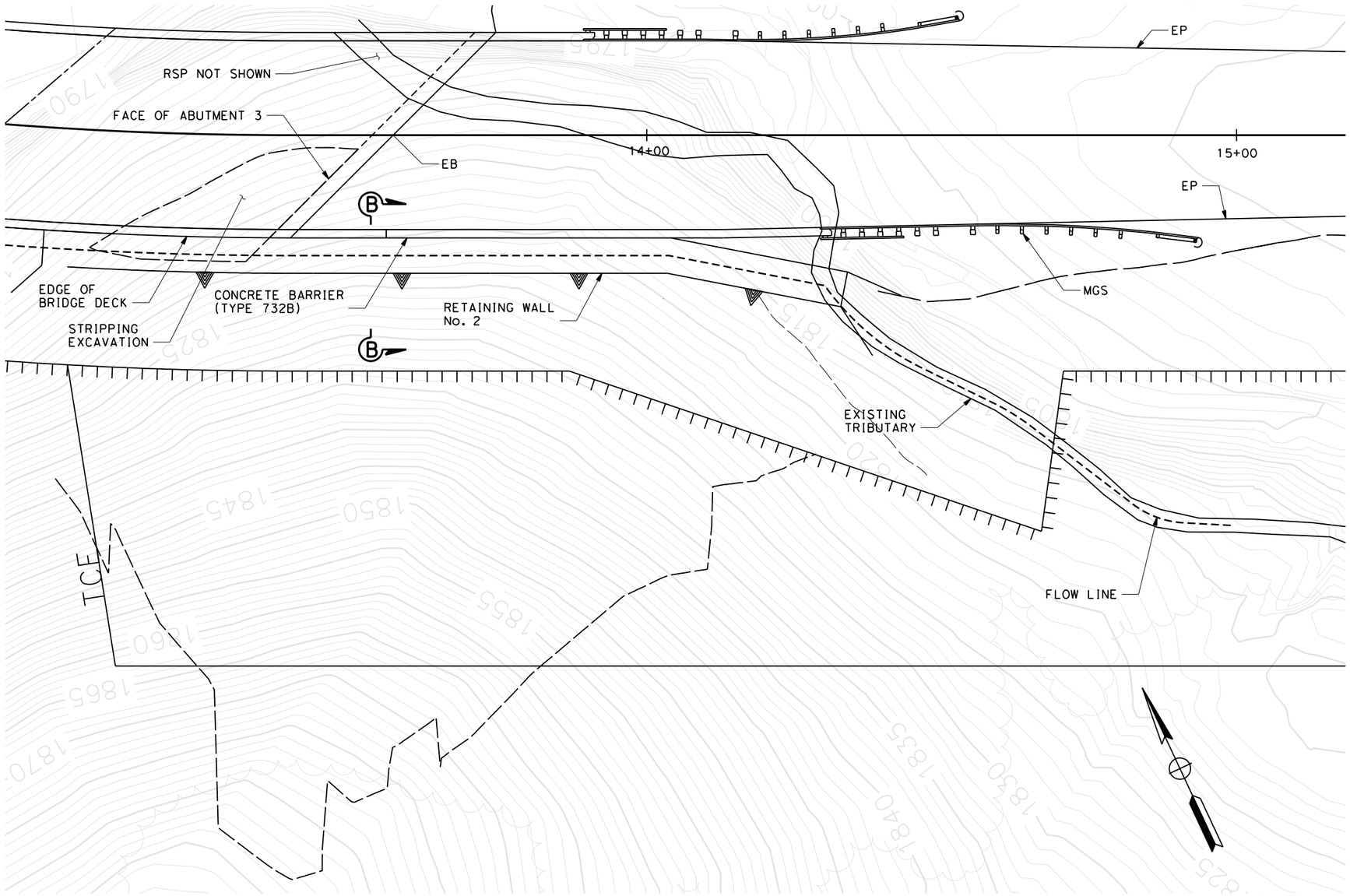

PLAN

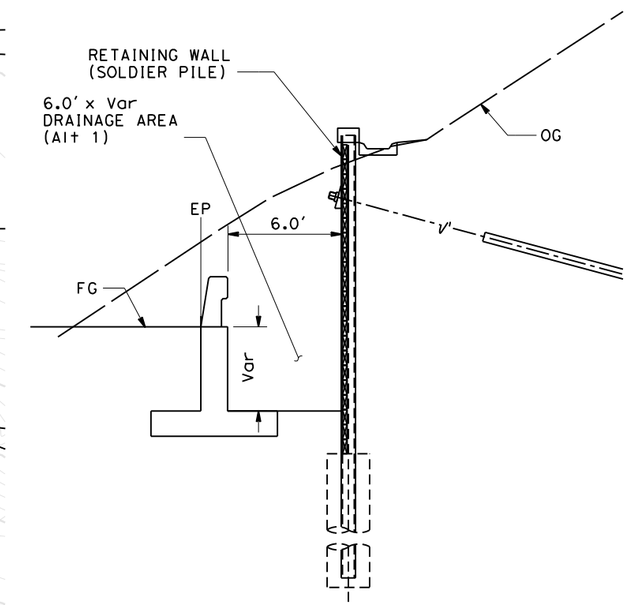

SECTION A-A RETAINING WALL No. 1

LEGEND:

——— CHANNEL BYPASS

DRAINAGE DETAILS

NO SCALE

DD-1

REVISED BY	DATE REVISED
ANDREW MITCHELL	01/22/13

CALCULATED-DESIGNED BY
CHECKED BY

PROJECT ENGINEER
CAROLYN DAVIS

SAN BENITO DEPARTMENT OF PUBLIC WORKS

PANOCHE ROAD BRIDGE REPLACEMENT

LAST REVISION 00-00-00 | DATE PLOTTED => 7/13/2021 | TIME PLOTTED => 5:13:33 PM

Dist	COUNTY	ROUTE	SHEET No.	TOTAL SHEETS
05	SBt	PANOCHE ROAD	14	35

PRELIMINARY PLANS
REGISTERED CIVIL ENGINEER 7/12/21 DATE

PLANS APPROVAL DATE

REGISTERED PROFESSIONAL ENGINEER Carolyn Davis No. C58440 Exp. 12/31/22 CIVIL STATE OF CALIFORNIA

THE STATE OF CALIFORNIA OR ITS OFFICERS OR AGENTS SHALL NOT BE RESPONSIBLE FOR THE ACCURACY OR COMPLETENESS OF SCANNED COPIES OF THIS PLAN SHEET.

QUINCY ENGINEERING
11017 Cobblerock Drive
Suite 100
Rancho Cordova, CA 95670

San Benito County - Public Works Department
2301 Technology Parkway
Hollister, CA 95023

NOTES:

1. THIS PLAN ACCURATE FOR TRAFFIC HANDLING WORK ONLY.
2. LOCATION OF CONSTRUCTION AREA SIGNS ARE APPROXIMATE, EXACT LOCATION WILL BE DETERMINED BY THE ENGINEER.
3. MAINTAIN ACCESS TO DRIVEWAYS AT ALL TIMES.
4. ABUTMENT 3 FOOTING AND LEFT WINGWALL MAY REQUIRE TEMPORARY SHORING.
5. SHORING TYPE TO BE APPROVED BY ENGINEER.
6. FOR SECTION A-A, B-B, & C-C, SEE TH-2

ABBREVIATIONS:

RPTS REMOVE PAINTED TRAFFIC STRIPE

LEGEND:

- STAGE 1-CONSTRUCT CULVERT, RETAINING WALLS, ROADWAY PORTION, BRIDGE, AND PLACE RSP PORTION.
- TEMPORARY RAILING(TYPE K)
- TEMPORARY CRASH CUSHION ARRAY
- TRAFFIC PLASTIC DRUMS
- SIGN - 1 POST
- R/W
- DIRECTION OF TRAFFIC
- (X) CONSTRUCTION AREA SIGN
- (LL) LIMIT LINE
- S "STOP" (TEMPORARY PAVEMENT MARKING)
- FLASHING BEACON
- (No.) ROADSIDE ROAD NUMBER
- RELOCATE ROADSIDE SIGN
- BEGIN/END OF TEMPORARY TRAFFIC STRIPE DETAIL
- (No.) TEMPORARY TRAFFIC STRIPE DETAIL No.

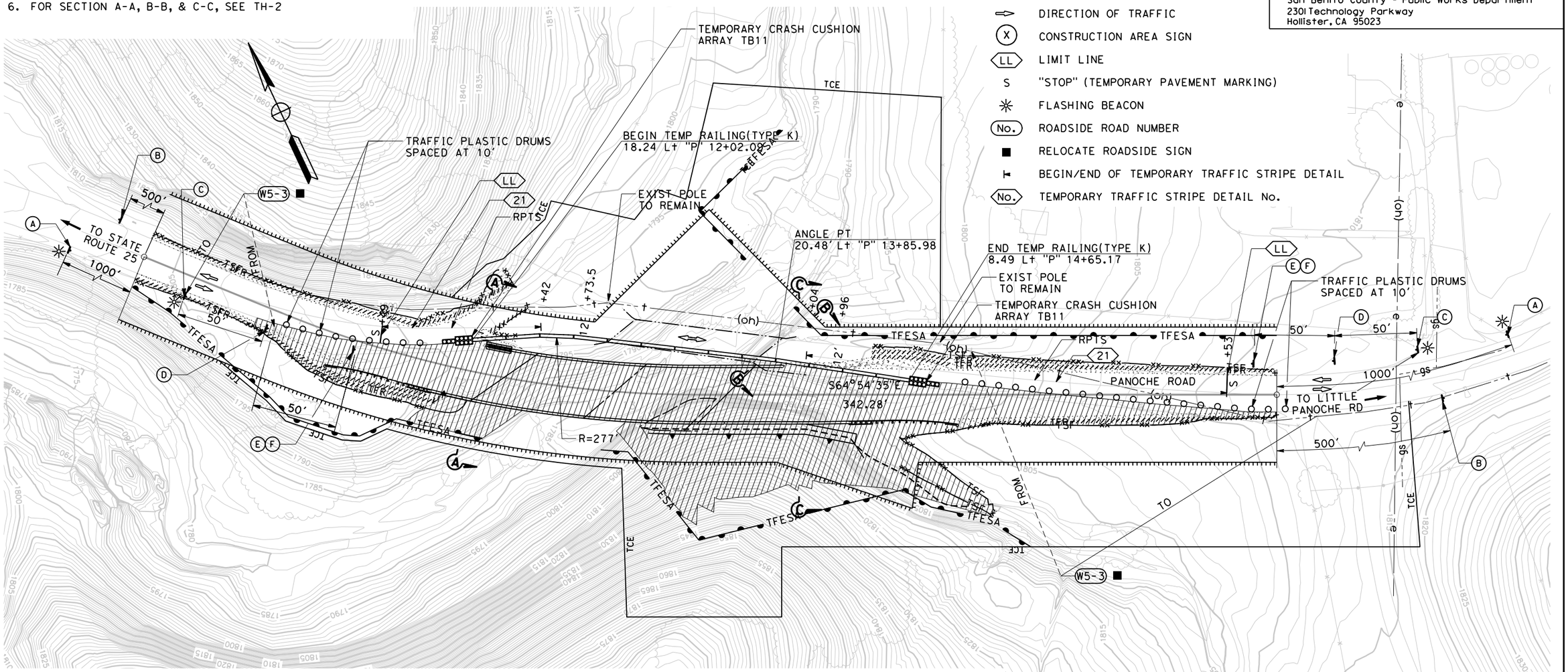

STATIONARY MOUNTED CONSTRUCTION AREA SIGNS

SIGN No. (X)	SIGN CODE FEDERAL	SIGN CODE CALIFORNIA	PANEL SIZE	SIGN MESSAGE	NUMBER OF POSTS AND SIZE	NUMBER OF SIGNS	DESCRIPTION
A	W20-1		36" x 36"	ROAD WORK AHEAD	2 - 4" x 6"	2	
B	G20-2		36" x 18"	END ROAD WORK	2 - 4" x 6"	2	
C	W13-1P		18" x 18"	25 MPH	0 -	2	MOUNT BELOW ONE LANE BRIDGE SIGN
D	W3-1		36" x 36"	STOP AHEAD SYMBOL	2 - 4" x 6"	2	
E	R1-1		30" x 30"	STOP	2 - 4" x 6"	2	
F			36" x 36"	PROCEED WHEN CLEAR	0 -	2	MOUNT BELOW STOP SIGN

TRAFFIC HANDLING AND CONSTRUCTION AREA SIGNS

SCALE: 1"=30'

TH-1

SAN BENITO DEPARTMENT OF PUBLIC WORKS
PANOCHE ROAD BRIDGE REPLACEMENT

PROJECT ENGINEER: CAROLYN DAVIS
CALCULATED-DESIGNED BY
CHECKED BY
REVISED BY: ANDREW MITCHELL
DATE REVISED: 01/22/13

LAST REVISION 00-00-00 | DATE PLOTTED => 7/13/2021 | TIME PLOTTED => 5:13:45 PM

Dist	COUNTY	ROUTE	SHEET No.	TOTAL SHEETS
05	SBt	PANOCHE ROAD	15	35

PRELIMINARY PLANS
REGISTERED CIVIL ENGINEER 7/12/21 DATE
PLANS APPROVAL DATE

REGISTERED PROFESSIONAL ENGINEER Carolyn Davis No. C58440 Exp. 12/31/22 CIVIL STATE OF CALIFORNIA

THE STATE OF CALIFORNIA OR ITS OFFICERS OR AGENTS SHALL NOT BE RESPONSIBLE FOR THE ACCURACY OR COMPLETENESS OF SCANNED COPIES OF THIS PLAN SHEET.

QUINCY ENGINEERING
11017 Cobblerock Drive
Suite 100
Rancho Cordova, CA 95670

San Benito County - Public Works Department
2301 Technology Parkway
Hollister, CA 95023

NOTES:

1. ABUTMENT 3 FOOTING AND LEFT WINGWALL MAY REQUIRE TEMPORARY SHORING.
2. SHORING TYPE TO BE APPROVED BY THE ENGINEER.
3. FOR SECTION A-A, B-B, C-C LOCATION, SEE TH-1.
4. REFER TO TYPICAL SECTION SHEETS FOR STRUCTURAL SECTION DETAILS.
5. TEMP RAILING (TYPE K) SHALL HAVE SCUPPERS TO ALLOW DRAINAGE RELIEF.
6. MAINTAIN ONE 12 FT LANE MINIMUM FROM 11+49.00 TO 16+53.00.

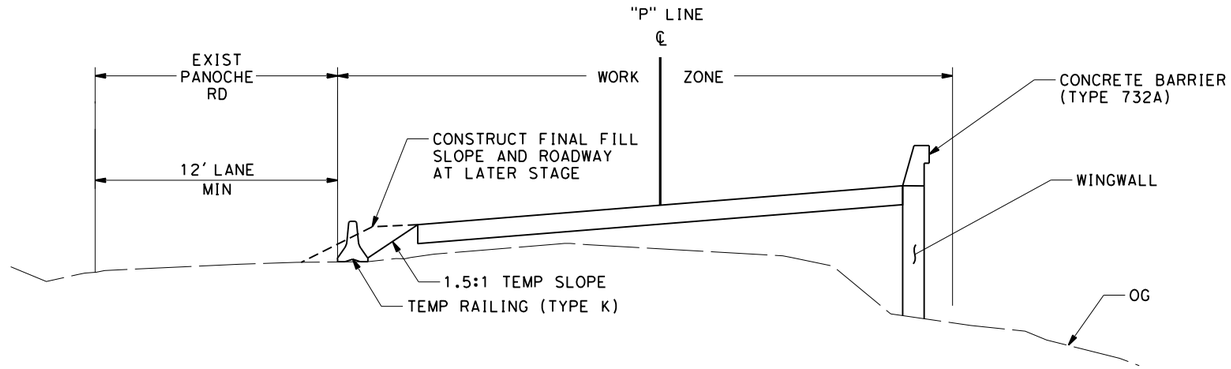

SECTION A-A

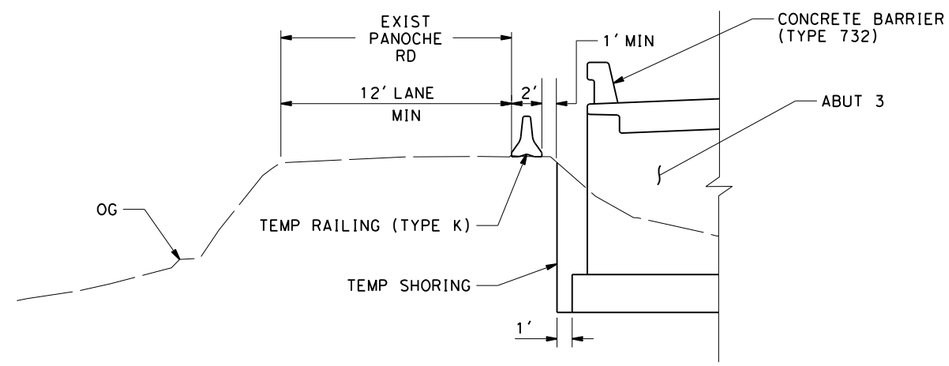

SECTION B-B

SEE NOTE 1 & 2

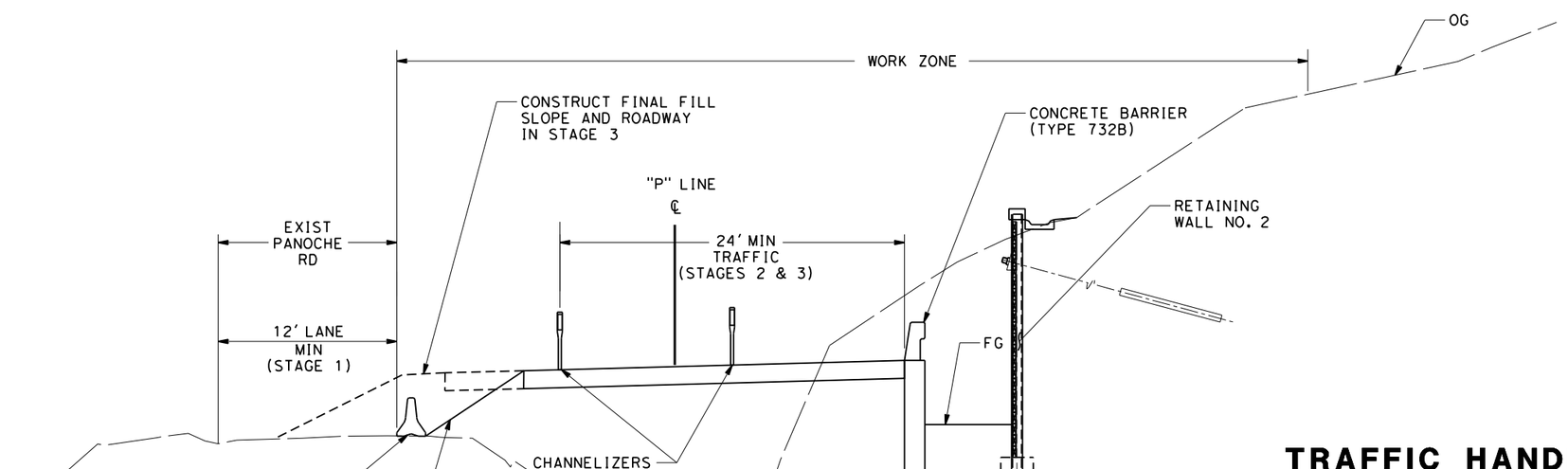

SECTION C-C

TRAFFIC HANDLING AND CONSTRUCTION AREA SIGNS

NO SCALE

TH-2

REVISED BY	DATE REVISED
ANDREW MITCHELL	01/22/13

CALCULATED-DESIGNED BY
CHECKED BY

PROJECT ENGINEER CAROLYN DAVIS

SAN BENITO DEPARTMENT OF PUBLIC WORKS

PANOCHE ROAD BRIDGE REPLACEMENT

LAST REVISION 00-00-00 DATE PLOTTED => 7/13/2021 TIME PLOTTED => 5:13:57 PM

Dist	COUNTY	ROUTE	SHEET No.	TOTAL SHEETS
05	SBt	PANOCHE ROAD	16	35

PRELIMINARY PLANS
REGISTERED CIVIL ENGINEER 7/12/21 DATE

REGISTERED PROFESSIONAL ENGINEER
Carolyn Davis
No. C58440
Exp. 12/31/22
CIVIL
STATE OF CALIFORNIA

PLANS APPROVAL DATE

THE STATE OF CALIFORNIA OR ITS OFFICERS OR AGENTS SHALL NOT BE RESPONSIBLE FOR THE ACCURACY OR COMPLETENESS OF SCANNED COPIES OF THIS PLAN SHEET.

QUINCY ENGINEERING
11017 Cobblerock Drive
Suite 100
Rancho Cordova, CA 95670

San Benito County - Public Works Department
2301 Technology Parkway
Hollister, CA 95023

NOTES:

1. THIS PLAN ACCURATE FOR TRAFFIC HANDLING WORK ONLY.
2. LOCATION OF CONSTRUCTION AREA SIGNS ARE APPROXIMATE, EXACT LOCATION WILL BE DETERMINED BY THE ENGINEER.
3. MAINTAIN ACCESS TO DRIVEWAYS AT ALL TIMES.
4. FOR SECTION C-C, SEE TH-2 SHEET.

LEGEND:

- STAGE 2 - REMOVE EXISTING PAVEMENT AND BRIDGE, AND COMPLETE RSP PLACEMENT
- STAGE 3 - CONSTRUCT CONFORMS AND DRIVEWAY UNDER TEMPORARY LANE CLOSURE
- CHANNELIZERS (SURFACE MOUNTED)
- SIGN - 1 POST PLACED IN STAGE 1
- R/W
- DIRECTION OF TRAFFIC
- (X) CONSTRUCTION AREA SIGN
- RELOCATE STATIONARY MOUNTED CONSTRUCTION AREA SIGN

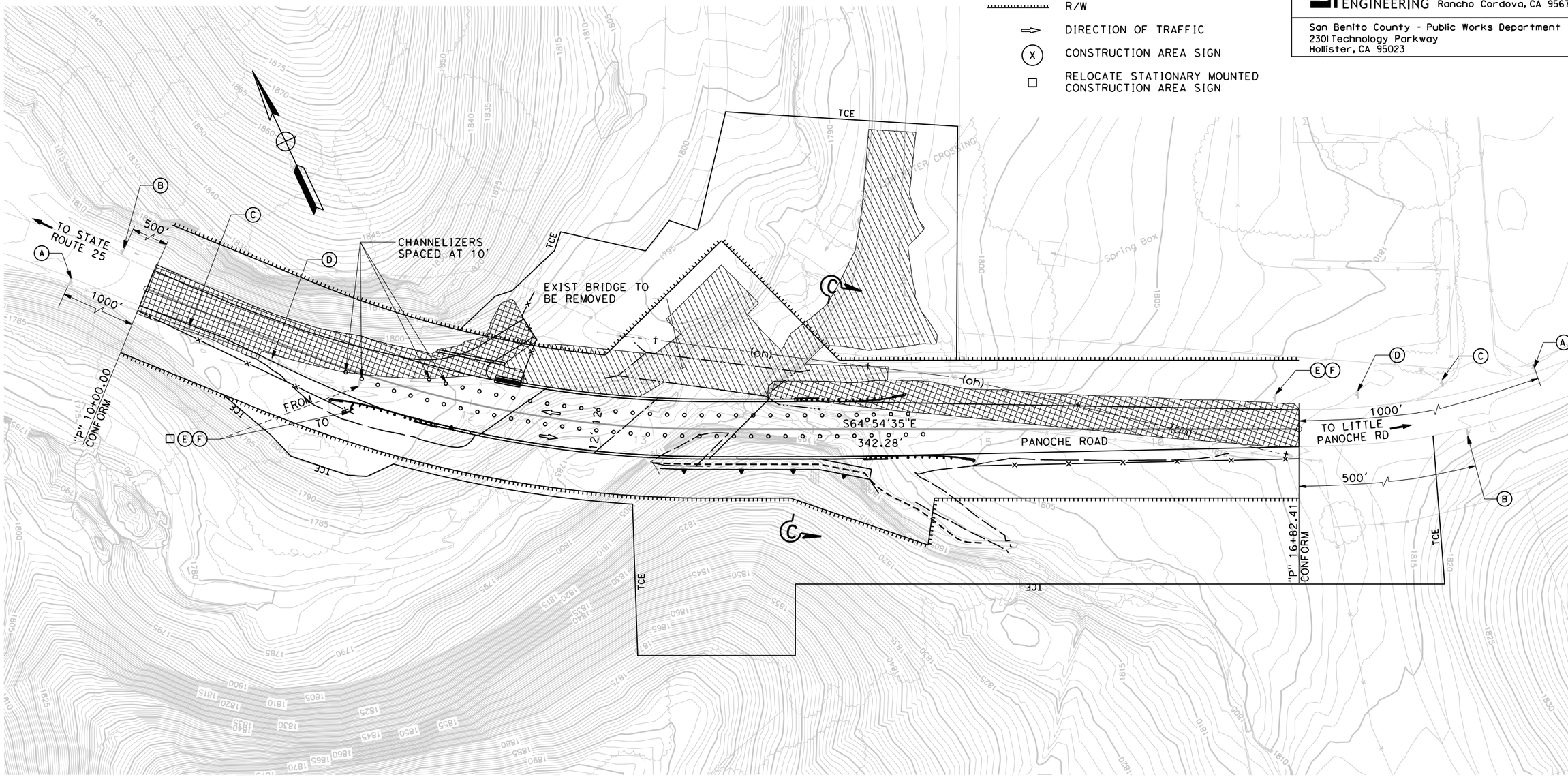

TRAFFIC HANDLING AND CONSTRUCTION AREA SIGNS

SCALE: 1"=30'

TH-3

SAN BENITO DEPARTMENT OF PUBLIC WORKS

PANOCHE ROAD BRIDGE REPLACEMENT

PROJECT ENGINEER: CAROLYN DAVIS

CALCULATED-DESIGNED BY: ANDREW MITCHELL

CHECKED BY

REVISED BY

DATE REVISED: 01/22/13

LAST REVISION 00-00-00 | DATE PLOTTED => 7/13/2021 | TIME PLOTTED => 5:14:11 PM

Dist	COUNTY	ROUTE	SHEET No.	TOTAL SHEETS
05	SBt	PANOCHE ROAD		

65% SUBMITTAL XX/XX/XX
REGISTERED CIVIL ENGINEER DATE

PLANS APPROVAL DATE

REGISTERED PROFESSIONAL ENGINEER Scott McCauley No. 71495 Exp. 12/31/19 CIVIL STATE OF CALIFORNIA

THE STATE OF CALIFORNIA OR ITS OFFICERS OR AGENTS SHALL NOT BE RESPONSIBLE FOR THE ACCURACY OR COMPLETENESS OF SCANNED COPIES OF THIS PLAN SHEET.

QUINCY ENGINEERING
11017 Cobblerock Drive
Suite 100
Rancho Cordova, CA 95670

San Benito County - Public Works Department
2301 Technology Parkway
Hollister, CA 95023

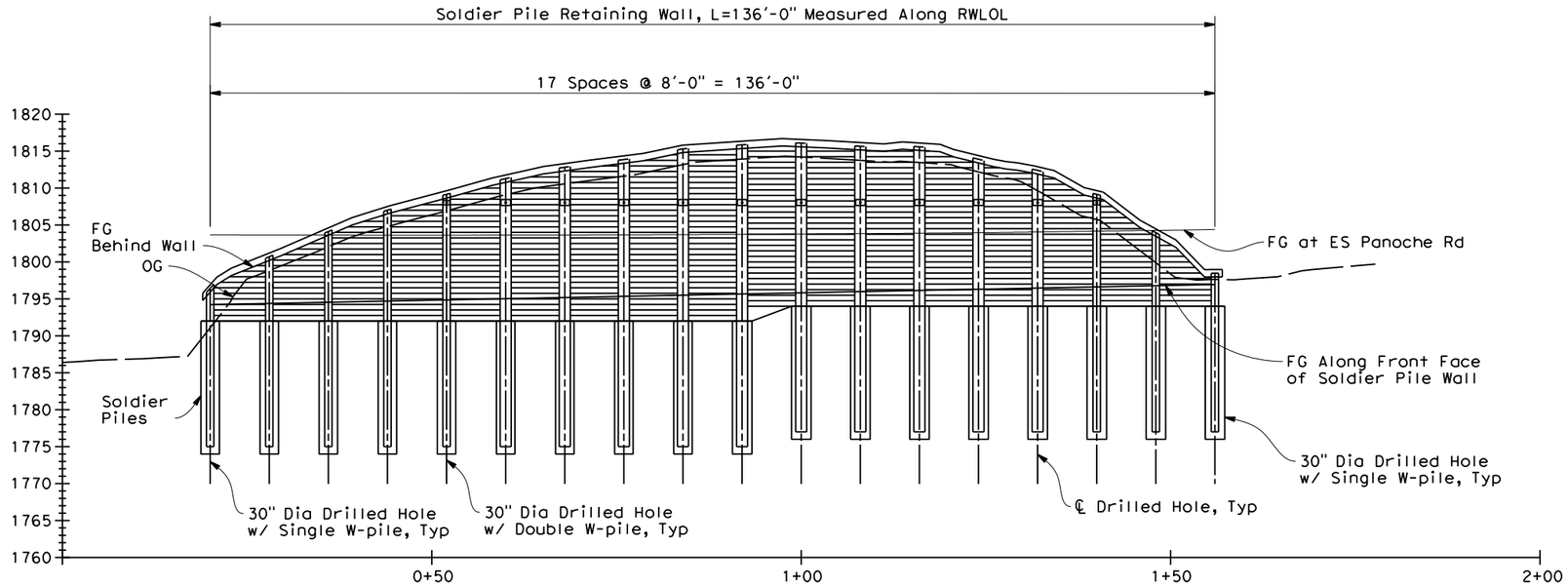

DEVELOPED ELEVATION

1"=10'

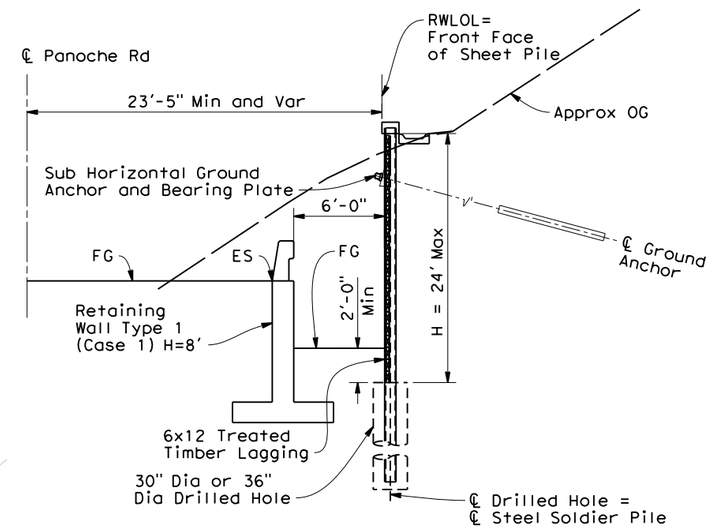

TYPICAL SECTION

3/8"=1'-0"

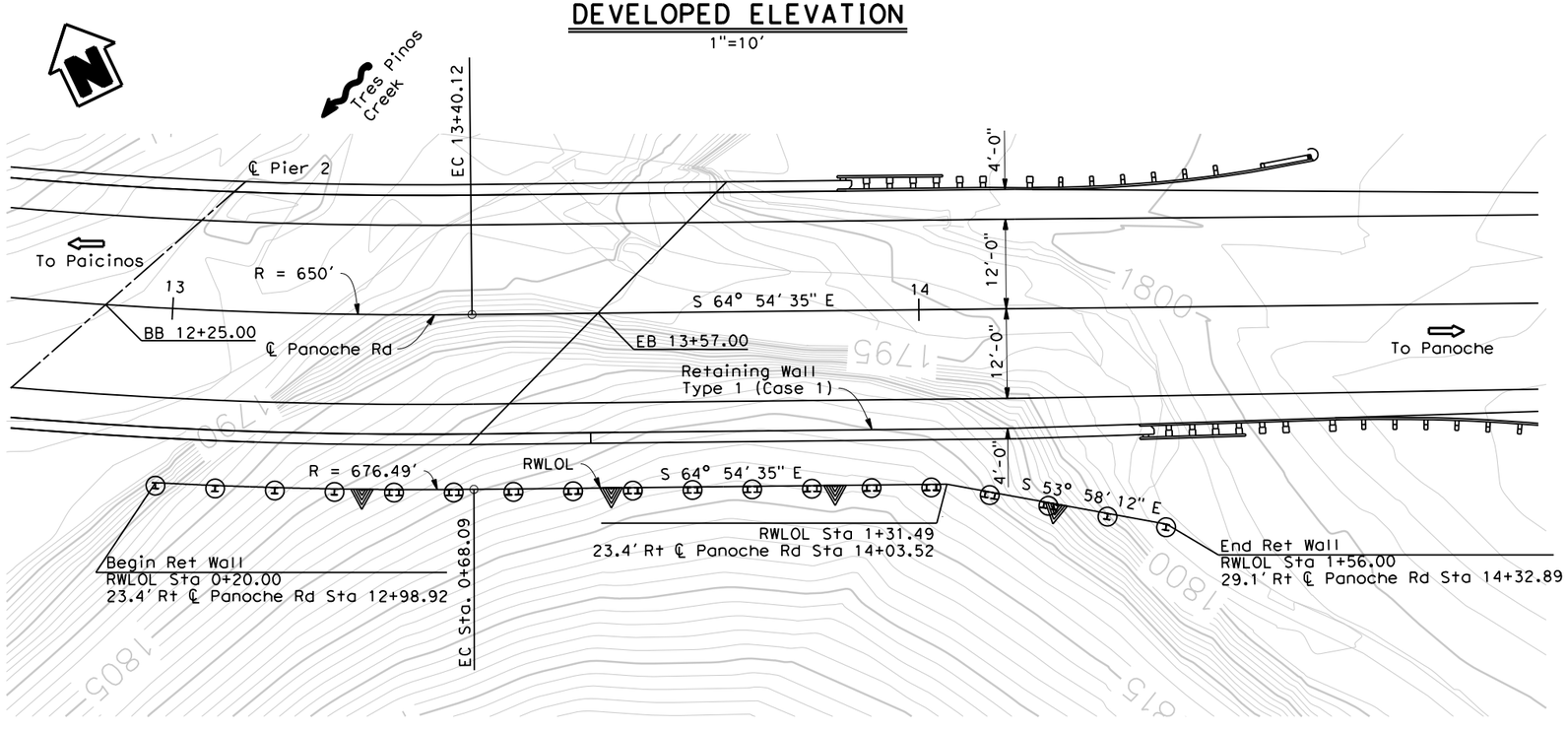

PLAN

1"=10'

RETAINING WALL PLAN

SCALE AS SHOWN

RW-1

SAN BENITO DEPARTMENT OF PUBLIC WORKS

PANOCHE ROAD BRIDGE REPLACEMENT

PROJECT ENGINEER: SCOTT McCAULEY

CALCULATED-DESIGNED BY: SCOTT McCAULEY

CHECKED BY

REVISED BY | DATE REVISED

LAST REVISION 00-00-00 | DATE PLOTTED => 7/13/2021 | TIME PLOTTED => 5:14:22 PM

Dist	COUNTY	ROUTE	SHEET No.	TOTAL SHEETS
05	SBt	PANOCHE ROAD		35

PRELIMINARY PLANS 7/12/21
REGISTERED CIVIL ENGINEER DATE

PLANS APPROVAL DATE

REGISTERED PROFESSIONAL ENGINEER
Carolyn Davis
No. C58440
Exp. 12/31/22
CIVIL
STATE OF CALIFORNIA

THE STATE OF CALIFORNIA OR ITS OFFICERS OR AGENTS SHALL NOT BE RESPONSIBLE FOR THE ACCURACY OR COMPLETENESS OF SCANNED COPIES OF THIS PLAN SHEET.

QUINCY ENGINEERING
11017 Cobblerock Drive
Suite 100
Rancho Cordova, CA 95670

San Benito County - Public Works Department
2301 Technology Parkway
Hollister, CA 95023

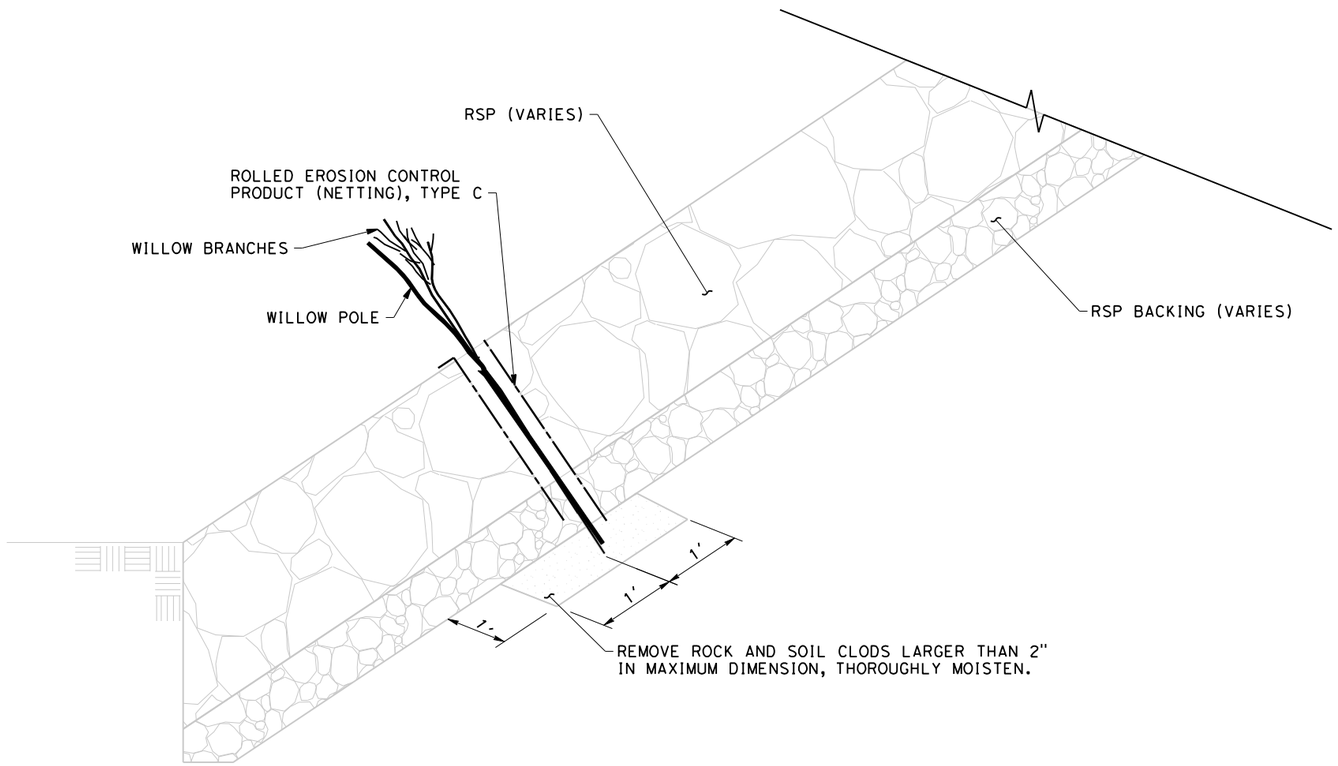

VEGETATED ROCK SLOPE PROTECTION

SECTION

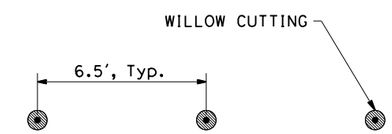

VEGETATED ROCK SLOPE PROTECTION SPACING

PLAN

EROSION CONTROL DETAILS

ECD-1

REVISED BY	DATE REVISED
ANDREW MITCHELL	01/22/13

CALCULATED-DESIGNED BY
CHECKED BY

PROJECT ENGINEER
CAROLYN DAVIS

SAN BENITO DEPARTMENT OF PUBLIC WORKS

PANOCHE ROAD BRIDGE REPLACEMENT

LAST REVISION 00-00-00
DATE PLOTTED => 7/13/2021
TIME PLOTTED => 5:14:29 PM

DIST	COUNTY	ROUTE	SHEET No	TOTAL SHEETS
05	SBt	PANOCHE ROAD	18	33

REGISTERED CIVIL ENGINEER — DATE 11/05/20

PRELIMINARY PLANS

PLANS APPROVAL DATE

The identity or its officers or agents shall not be responsible for the accuracy or completeness of electronic copies of this plan sheet.

REGISTERED PROFESSIONAL ENGINEER — Scott McCauley — No. 71495 — Exp. 12-31-21 — CIVIL — STATE OF CALIFORNIA

QUINCY ENGINEERING
11017 Cobblerock Dr #100
Rancho Cordova, CA 95670

San Benito County - Public Works Department
2301 Technology Parkway
Hollister, CA 95023

Legend:

1. Paint "Br No. 43C0070"
2. Paint "Panoche Road Bridge"
3. Rock Slope Protection, see "Road Plans"
4. Structure Approach Type EQ(10)
6. MGS or Quadguard

Highwater elevation

Indicates existing structure

Notes:

1. For General Notes, Index to Plans, Quantities, Hydraulic Data, and Caltrans Standard Plans, see "General Notes" sheet.
2. For retaining wall details, see "Abutment Details No. 2" sheet.

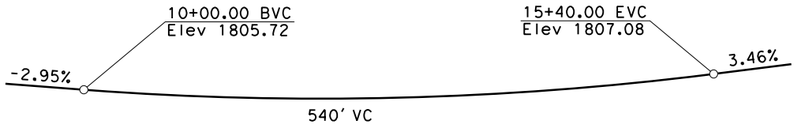

PROFILE GRADE

No Scale

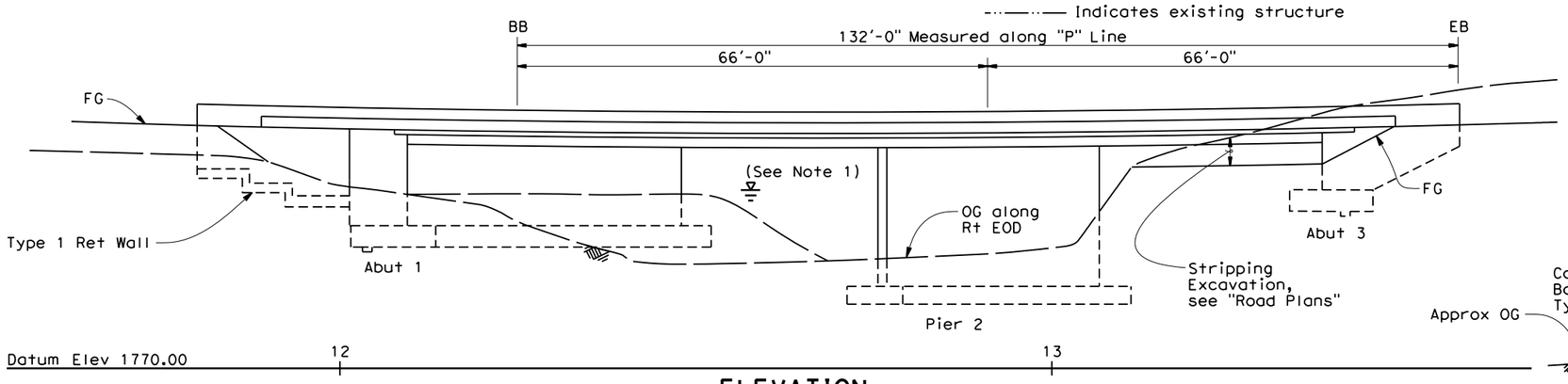

ELEVATION

1"=10'

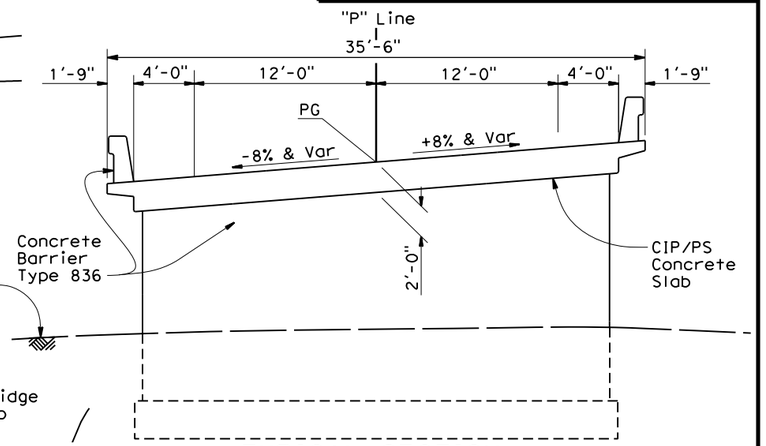

TYPICAL SECTION

1"=5'

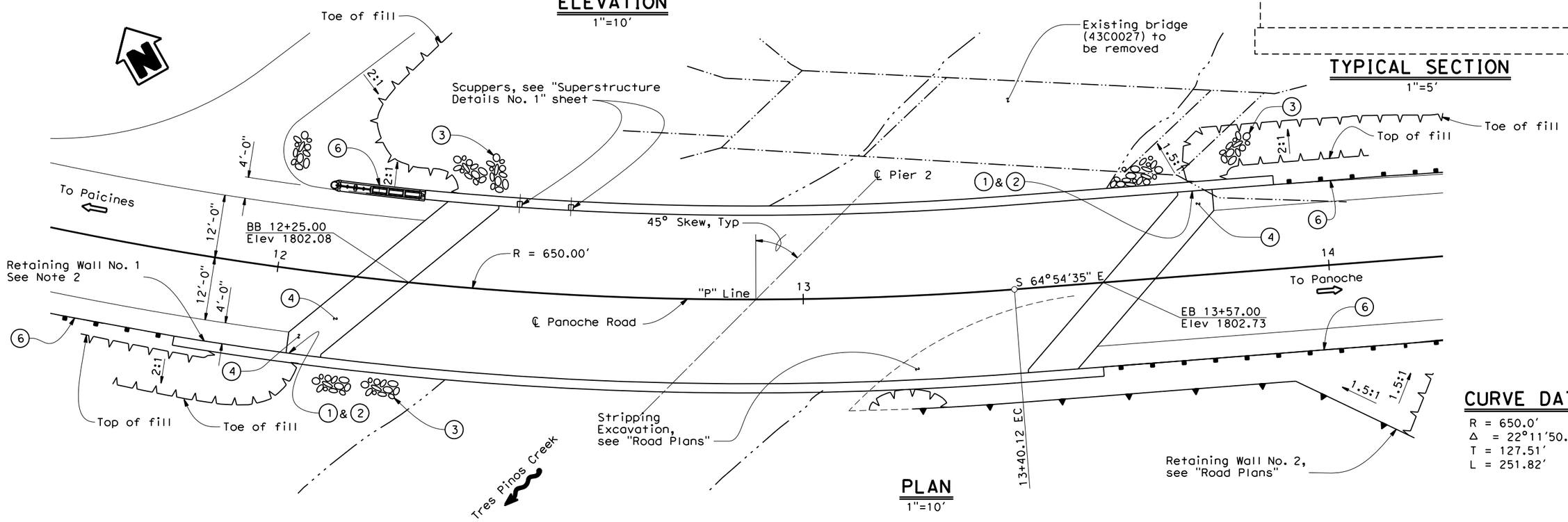

PLAN

1"=10'

CURVE DATA

R = 650.0'
Δ = 22°11'50.16"
T = 127.51'
L = 251.82'

X DESIGN OVERSIGHT	DESIGN	BY S. McCauley	CHECKED X	LOAD & RESISTANCE FACTOR DESIGN	LIVE LOADING: HL93 W/"LOW-BOY"; PERMIT DESIGN VEHICLE	
X SIGN OFF DATE	DETAILS	BY B. Maechler	CHECKED X	LAYOUT	BY M. Quest/S. McCauley	CHECKED X
	QUANTITIES	BY X	CHECKED X	SPECIFICATIONS	BY X	PLANS AND SPECS COMPARED X

PREPARED FOR THE SAN BENITO COUNTY DEPARTMENT OF PUBLIC WORKS

PROJECT ENGINEER

BRIDGE NO. 43C0070 — POST MILES

PANOCHE RD BRIDGE (REPLACE)

GENERAL PLAN

DESIGN GENERAL PLAN SHEET (ENGLISH) (REV.7/16/10)

ORIGINAL SCALE IN INCHES FOR REDUCED PLANS 0 1 2 3

UNIT:
PROJECT NUMBER & PHASE:
CONTRACT NO.:

DISREGARD PRINTS BEARING EARLIER REVISION DATES

REVISION DATES: 1/22/13

SHEET 1 OF 13

FILE => S:\Client\San Benito Cnty - S70\S70-300 Panoche Rd\CAD\bridge\S70300a-a-gp01.dgn

USERNAME => Andrew.Mi DATE PLOTTED => 11/5/2020 TIME PLOTTED => 3:53:47 PM

DIST	COUNTY	ROUTE	SHEET No	TOTAL SHEETS
05	SBt	PANOCHE ROAD	19	33

REGISTERED CIVIL ENGINEER — DATE 11/05/20

PRELIMINARY PLANS

PLANS APPROVAL DATE

REGISTERED PROFESSIONAL ENGINEER — Scott McCauley — No. 71495 — Exp. 12-31-21 — CIVIL — STATE OF CALIFORNIA

The identity or its officers or agents shall not be responsible for the accuracy or completeness of electronic copies of this plan sheet.

QUINCY ENGINEERING
11017 Cobblerock Dr #100
Rancho Cordova, CA 95670

San Benito County - Public Works Department
2301 Technology Parkway
Hollister, CA 95023

GENERAL NOTES
LOAD AND RESISTANCE FACTOR DESIGN

DESIGN: AASHTO LRFD Bridge Design Specifications 6th edition with Caltrans Amendments

SEISMIC DESIGN: Caltrans Seismic Design Criteria (SDC), Version 1.7 dated April 2013.

DEAD LOAD: Includes 35 psf for future wearing surface.

LIVE LOADING: HL93 and permit design load.

SEISMIC LOADING:
Soil Profile V_{S30} = 560 m/s
Moment Magnitude Mmax = 7.9
Peak Ground Acceleration = 0.48 g

CONCRETE:
f_y = 60 ksi
f'_c = 3.6 ksi
n = 8
See Prestressing Notes

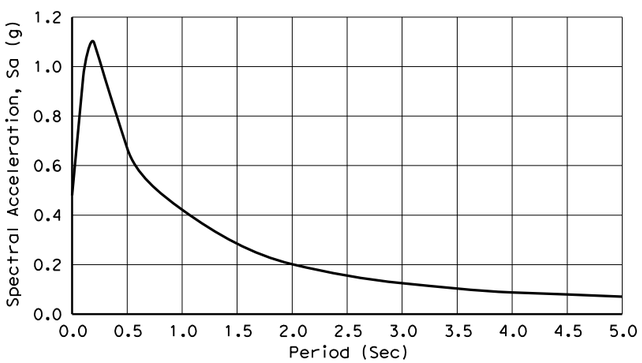

ACCELERATION RESPONSE SPECTRA CURVE
No Scale

INDEX TO PLANS

Sheet No.	Title
1	General Plan
2	General Notes
3	Deck Contours
4	Foundation Plan
5	Abutment 1 Layout
6	Abutment 3 Layout
7	Abutment Details No. 1
8	Abutment Details No. 2
9	Pier Details
10	Typical Section
11	Superstructure Details No. 1
12	Superstructure Details No. 2
13	Log of Test Borings

STANDARD PLANS DATED 2018

	A3A	Abbreviations (Sheet 1 of 3)
	A3B	Abbreviations (Sheet 2 of 3)
	A3C	Abbreviations (Sheet 3 of 3)
	A10A	Legend - Lines and Symbols (Sheet 1 of 5)
	A10B	Legend - Lines and Symbols (Sheet 2 of 5)
	A10C	Legend - Lines and Symbols (Sheet 3 of 5)
	A10D	Legend - Lines and Symbols (Sheet 4 of 5)
	A10E	Legend - Lines and Symbols (Sheet 5 of 5)
	A10F	Legend - Soil (Sheet 1 of 2)
	A10H	Legend - Rock
	A62C	Limits of Payment for Excavation and Backfill - Bridge
RSP	B0-1	Bridge Details
	B0-3	Bridge Details
	B0-5	Bridge Details
	B0-13	Bridge Details
RSP	B3-1A	Retaining Wall Type 1 (Case 1)
	B3-5	Retaining Wall Details No. 1
	B6-21	Joint Seals (Maximum Movement Rating = 2")
	B7-5	Deck Drains
	B7-8	Deck Drainage Details
	B8-5	Cast-in-Place Post-Tensioned Girder Details
	B9-4	Structure Approach - Type EQ (10)
	B9-5	Structure Approach - Slab Details
	B9-6	Structure Approach - Drainage Details
RSP	B11-79	Concrete Barrier Type 836 Details No. 1
RSP	B11-80	Concrete Barrier Type 836 Details No. 2

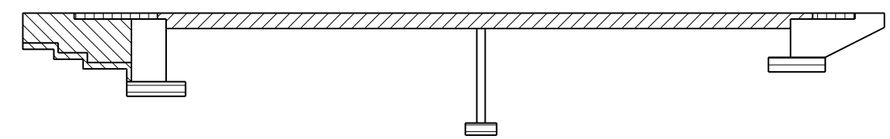

- Structural Concrete, Bridge
- Structural Concrete, Bridge Footing
- Structural Concrete, Approach Slab (Type EQ)
- Structural Concrete, Bridge (Polymer Fiber) (f'c = 5.0 ksi at 28 days)
- Structural Concrete, Retaining Wall

CONCRETE STRENGTH AND TYPE LIMITS
No Scale

Standard Plan Sheet No.
Detail No.

RSP — Revised Standard Plan Sheet No.
Detail No.

HYDROLOGIC SUMMARY

Drainage area: 30.5 Square Miles

	Design Flood	Base Flood
Frequency (years)	50	100
Discharge (cubic feet per second)	2910	4020
Water Surface Elev at Bridge (ft)	1793.6	1795

Flood plain data based upon information available when the plans were prepared and are shown to meet Federal requirments.The accuracy of said information is not warranted by the County and interested or affected parties should made their own investigations.

X — DESIGN OVERSIGHT
X — SIGN OFF DATE

	BY	CHECKED
DESIGN	S. McCauley	X
DETAILS	B. Maechler	X
QUANTITIES	X	X

PREPARED FOR THE SAN BENITO COUNTY DEPARTMENT OF PUBLIC WORKS

PROJECT ENGINEER

BRIDGE NO. 43C0070
POST MILE

PANOCHE RD BRIDGE (REPLACE)
GENERAL NOTES

DESIGN DETAIL SHEET (ENGLISH) (REV.7/16/10)

ORIGINAL SCALE IN INCHES FOR REDUCED PLANS 0 1 2 3

UNIT:
PROJECT NUMBER & PHASE:
CONTRACT NO.:

DISREGARD PRINTS BEARING EARLIER REVISION DATES 1/22/13

REVISION DATES | SHEET 2 OF 13

FILE => S:\Client\San Benito Cnty - S70\S70-300 Panoche Rd\CAD\bridge\S70300a-b-gnote01.dgn

USERNAME => Andrew.Mifsud@ | DATE/TIME PLOTTED => 11/5/2020 | TIME PLOTTED => 3:53:55 PM

DIST	COUNTY	ROUTE	SHEET No	TOTAL SHEETS
05	SBt	PANOCHE ROAD	20	33

REGISTERED CIVIL ENGINEER — DATE 11/05/20

PRELIMINARY PLANS

PLANS APPROVAL DATE

The identity or its officers or agents shall not be responsible for the accuracy or completeness of electronic copies of this plan sheet.

REGISTERED PROFESSIONAL ENGINEER — Scott McCauley — No. 71495 — Exp. 12-31-21 — CIVIL — STATE OF CALIFORNIA

QUINCY ENGINEERING
11017 Cobblerock Dr #100
Rancho Cordova, CA 95670

San Benito County - Public Works Department
2301 Technology Parkway
Hollister, CA 95023

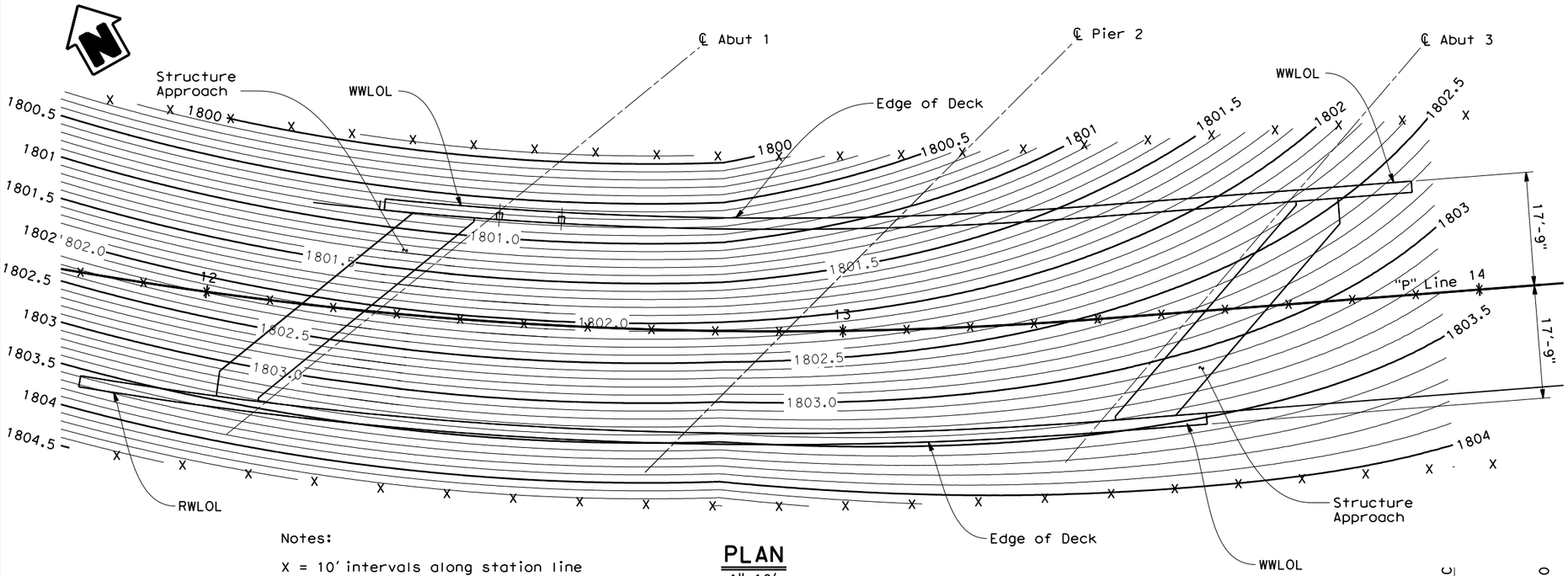

Notes:

X = 10' intervals along station line

Contours Intervals = 0.10'

Contours do not include camber

PLAN
1"=10'

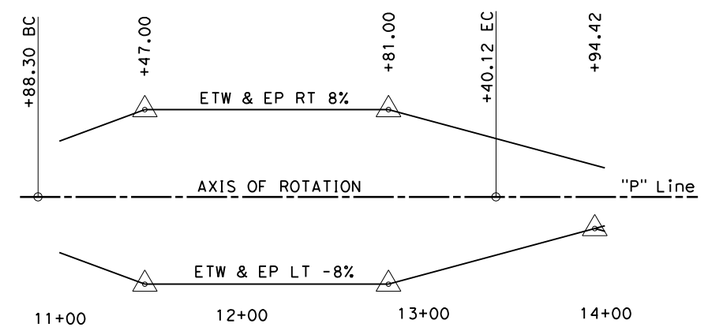

"P" LINE SUPERELEVATION
No Scale

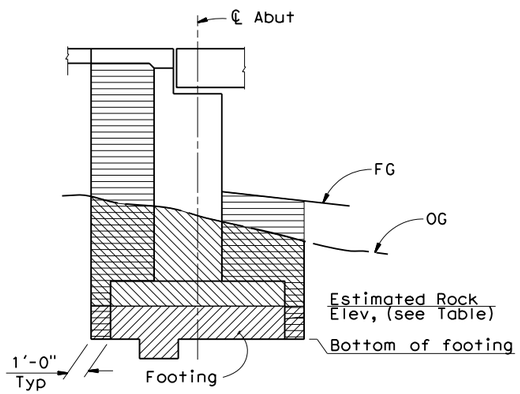

Estimated Rock Elevations

LOCATION	ELEVATION
Abut 1	1785.0
Pier 2	1781.0
Abut 3 Lower	1789.0
Abut 3 Upper	1797.0

ABUT TYPICAL SECTION

Note:
Abutment 3 Lower shown, Abutment 1 & Pier 2 similar

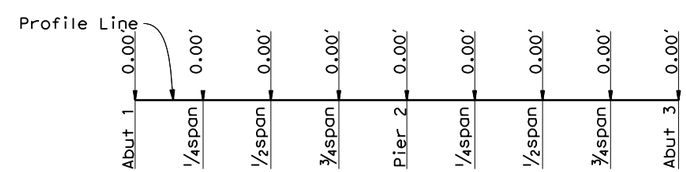

Note: Does not include allowance for falsework settlement

CAMBER DIAGRAM
No Scale

LIMITS OF PAYMENT FOR EXCAVATION AND BACKFILL
No Scale

- Indicates Structure Excavation (Bridge)
- Indicates Structure Excavation (Rock)
- Indicates Structure Backfill (Bridge)

DESIGN	BY S. McCauley	CHECKED X	
DETAILS	BY B. Maechler	CHECKED X	
QUANTITIES	BY X	CHECKED X	

X — DESIGN OVERSIGHT
X — SIGN OFF DATE

PREPARED FOR THE SAN BENITO COUNTY DEPARTMENT OF PUBLIC WORKS

PROJECT ENGINEER

BRIDGE NO. 43C0070
POST MILE

PANOCHE RD BRIDGE (REPLACE)
DECK CONTOURS

DESIGN DETAIL SHEET (ENGLISH) (REV.7/16/10)

ORIGINAL SCALE IN INCHES FOR REDUCED PLANS 0 1 2 3

UNIT:
PROJECT NUMBER & PHASE:
CONTRACT NO.:

DISREGARD PRINTS BEARING EARLIER REVISION DATES 1/22/13

REVISION DATES | SHEET 3 | OF 13

FILE => S:\Client\San Benito Cnty - S70\S70-300 Panoche Rd\CAD\bridge\S70300a-d-dc01.dgn

USERNAME => Andrew.Mi DATE/TIME PLOTTED => 11/5/2020 TIME PLOTTED => 3:54:04 PM

DIST	COUNTY	ROUTE	SHEET No	TOTAL SHEETS
05	SBt	PANOCHE ROAD	21	33

REGISTERED CIVIL ENGINEER — DATE 11/05/20

PRELIMINARY PLANS

PLANS APPROVAL DATE

REGISTERED PROFESSIONAL ENGINEER — Scott McCauley — No. 71495 — Exp. 12-31-21 — CIVIL — STATE OF CALIFORNIA

The identity or its officers or agents shall not be responsible for the accuracy or completeness of electronic copies of this plan sheet.

QUINCY ENGINEERING 11017 Cobblerock Dr #100 Rancho Cordova, CA 95670

San Benito County - Public Works Department
2301 Technology Parkway
Hollister, CA 95023

SURVEY CONTROL DATA

No.	NORTHING	EASTING	ELEVATION	DESCRIPTION
8	2128045.6730	5955306.6360	1796.5520	PK Nail/Tin
13	2128037.2990	5955273.2400	1797.0130	60D Nail CP
14	2128034.0090	5955179.0560	1800.4530	60D Nail CP

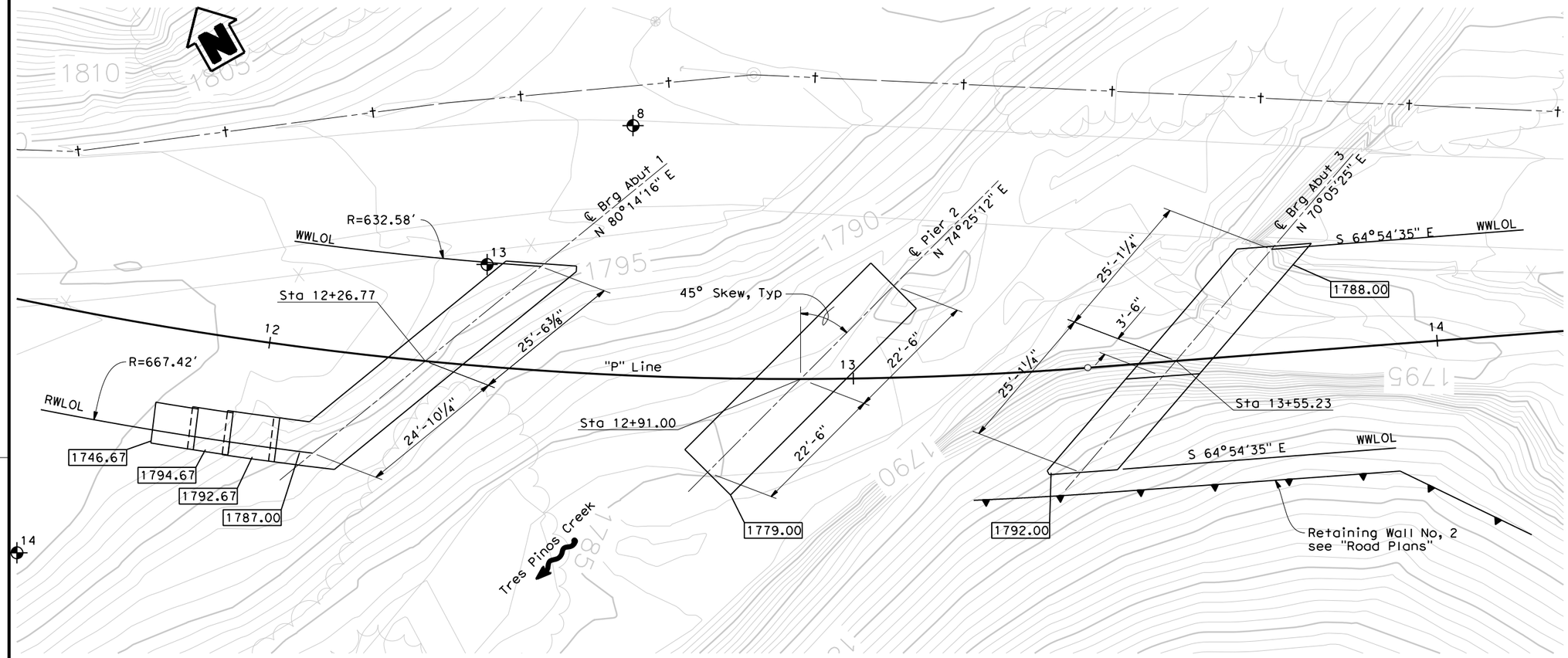

PLAN

1"=10'

SPREAD FOOTING DATA TABLE

LOCATION	LOAD AND RESISTANCE FACTOR DESIGN (LRFD)		
	SERVICE PERMISSIBLE NET CONTACT STRESS (SETTLEMENT) (ksf)	**STRENGTH** FACTORED GROSS NOMINAL BEARING RESISTANCE (φ_b=0.45) (ksf)	**EXTREME EVENT** FACTORED GROSS NOMINAL BEARING RESISTANCE (φ_b=1.00) (ksf)
Abut 1	N/A	N/A	N/A
Pier 2	10	13.5	30
Abut 3	N/A	N/A	N/A

Legend:

XXX.XX — Indicates bottom of footing elevation

Indicates survey control data point

X GEOTECHNICAL PROFESSIONAL APPROVAL DATE

X DESIGN OVERSIGHT

X SIGN OFF DATE

SCALE: X	VERT.DATUM X	HORZ.DATUM X	
PHOTOGRAMMETRY AS OF: X		ALIGNMENT TIES X	
SURVEYED	BY X	DRAFTED	BY X
FIELD CHECKED	BY X	CHECKED	BY X

	BY	CHECKED
DESIGN	S. McCauley	X
DETAILS	B. Maechler	X
QUANTITIES	X	X

PREPARED FOR THE SAN BENITO COUNTY DEPARTMENT OF PUBLIC WORKS

PROJECT ENGINEER

BRIDGE NO. 43C0070

POST MILE

PANOCHE RD BRIDGE (REPLACE)

FOUNDATION PLAN

FOUNDATION PLAN SHEET (ENGLISH) (REV.7/16/10)

ORIGINAL SCALE IN INCHES FOR REDUCED PLANS 0 1 2 3

UNIT:
PROJECT NUMBER & PHASE:

CONTRACT NO.:

DISREGARD PRINTS BEARING EARLIER REVISION DATES

REVISION DATES 1/22/13

SHEET 4 OF 13

FILE => S:\Client\San Benito Cnty - S70\S70-300 Panoche Rd\CAD\bridge\S70300a-e-fp101.dgn

USERNAME => Andrew.Mifsud@ PLOTTED => 11/5/2020 TIME PLOTTED => 3:54:22 PM

DIST	COUNTY	ROUTE	SHEET No	TOTAL SHEETS
05	SBt	PANOCHE ROAD	22	33

REGISTERED CIVIL ENGINEER — DATE 11/05/20

PRELIMINARY PLANS

PLANS APPROVAL DATE

The identity or its officers or agents shall not be responsible for the accuracy or completeness of electronic copies of this plan sheet.

REGISTERED PROFESSIONAL ENGINEER — Scott McCauley — No. 71495 — Exp. 12-31-21 — CIVIL — STATE OF CALIFORNIA

QUINCY ENGINEERING
11017 Cobblerock Dr #100
Rancho Cordova, CA 95670

San Benito County - Public Works Department
2301 Technology Parkway
Hollister, CA 95023

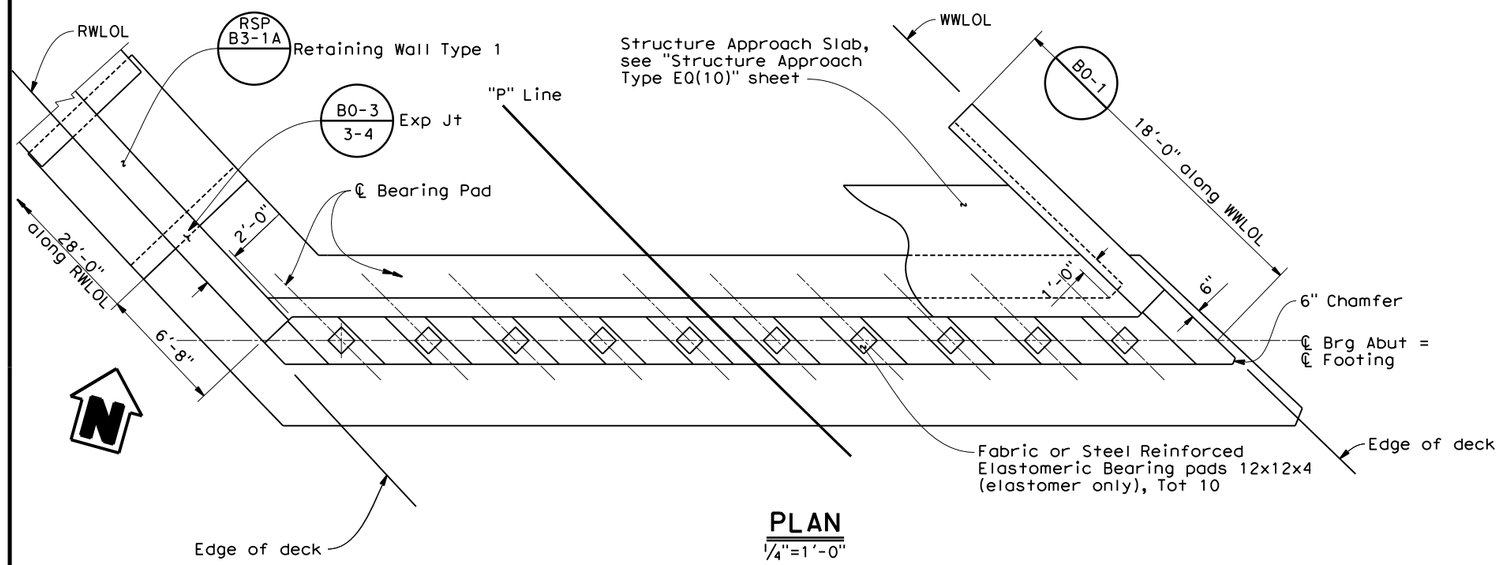

PLAN
1/4"=1'-0"

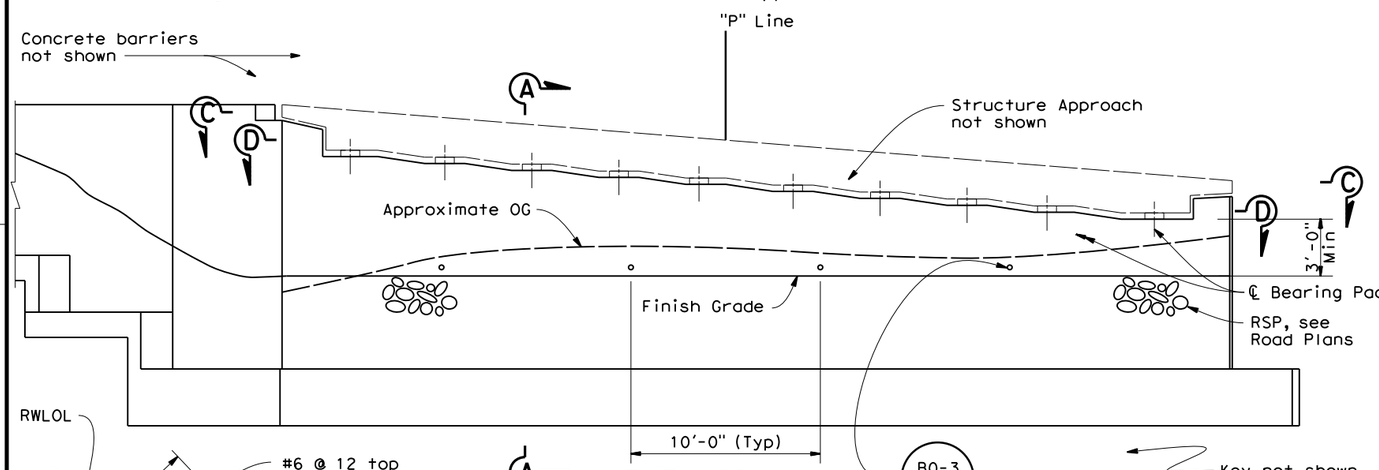

ELEVATION
1/4"=1'-0"

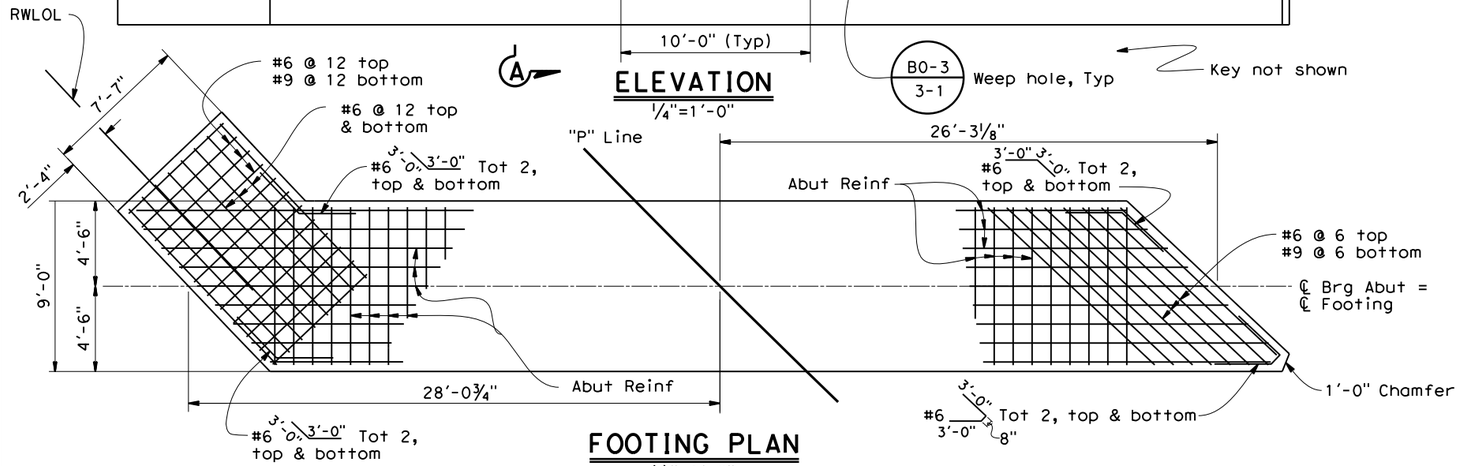

FOOTING PLAN
1/4"=1'-0"

Notes:

1. For sections and details not shown, see "Abutment 2 Layout", "Abutment Details No. 1" and "Abutment Details No. 2" sheets.

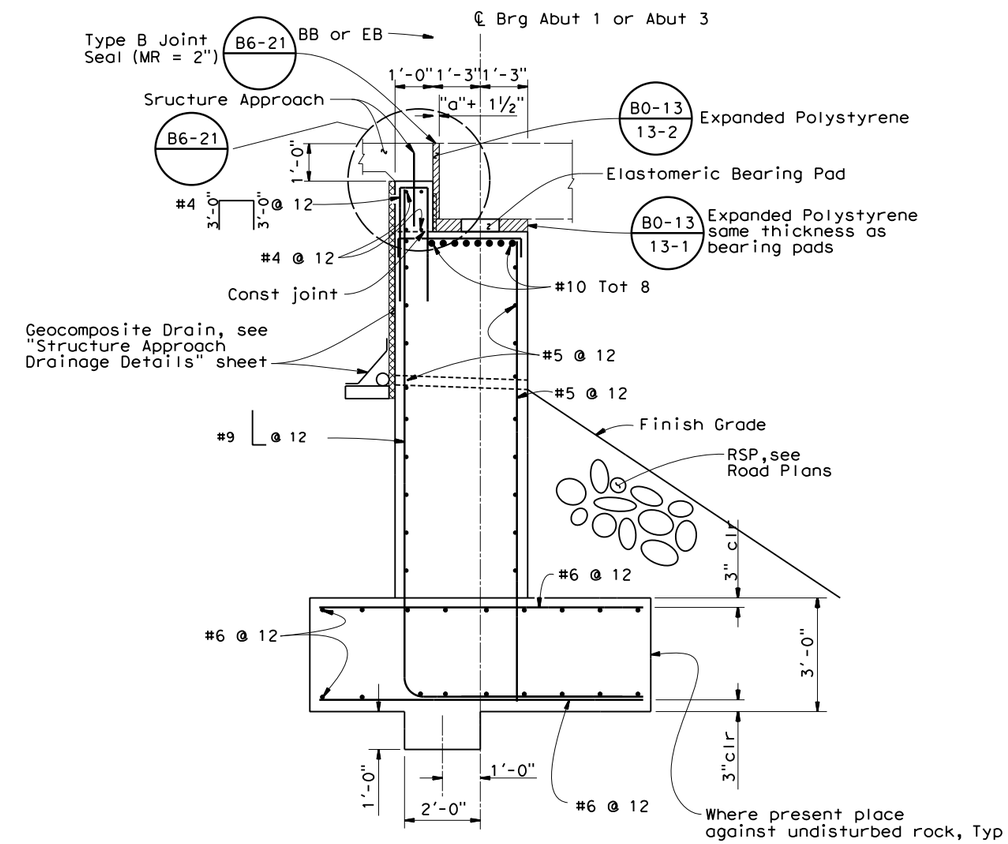

Note: Abutment 1 shown, Abutment 3 similar

SECTION A-A
1/2"=1'-0"

DESIGN	BY S. McCauley	CHECKED X	
DETAILS	BY B. Maechler	CHECKED X	
QUANTITIES	BY X	CHECKED X	

X — DESIGN OVERSIGHT
X — SIGN OFF DATE

DESIGN DETAIL SHEET (ENGLISH) (REV.7/16/10)

PREPARED FOR THE SAN BENITO COUNTY DEPARTMENT OF PUBLIC WORKS

PROJECT ENGINEER

BRIDGE NO. 43C0070
POST MILE

PANOCHE RD BRIDGE (REPLACE)
ABUTMENT 1 LAYOUT

ORIGINAL SCALE IN INCHES FOR REDUCED PLANS 0 1 2 3

UNIT:
PROJECT NUMBER & PHASE:
CONTRACT NO.:

DISREGARD PRINTS BEARING EARLIER REVISION DATES

REVISION DATES 1/22/13

SHEET 5 OF 13

FILE => S:\Client\San Benito Cnty - S70\S70-300 Panoche Rd\CAD\bridge\S70300a-f-a01_lo1.dgn

USERNAME => Andrew.Mitchell
DATE PLOTTED => 11/5/2020
TIME PLOTTED => 3:57:00 PM

DIST	COUNTY	ROUTE	SHEET No	TOTAL SHEETS
05	SBt	PANOCHE ROAD	23	33

REGISTERED CIVIL ENGINEER — DATE 11/05/20

PRELIMINARY PLANS

PLANS APPROVAL DATE

The identity or its officers or agents shall not be responsible for the accuracy or completeness of electronic copies of this plan sheet.

REGISTERED PROFESSIONAL ENGINEER — Scott McCauley — No. 71495 — Exp. 12-31-21 — CIVIL — STATE OF CALIFORNIA

QUINCY ENGINEERING
11017 Cobblerock Dr #100
Rancho Cordova, CA 95670

San Benito County - Public Works Department
2301 Technology Parkway
Hollister, CA 95023

Notes:

1. For sections and details not shown, see "Abutment 1 Layout", "Abutment Details No. 1" and "Abutment Details No. 2" sheets.

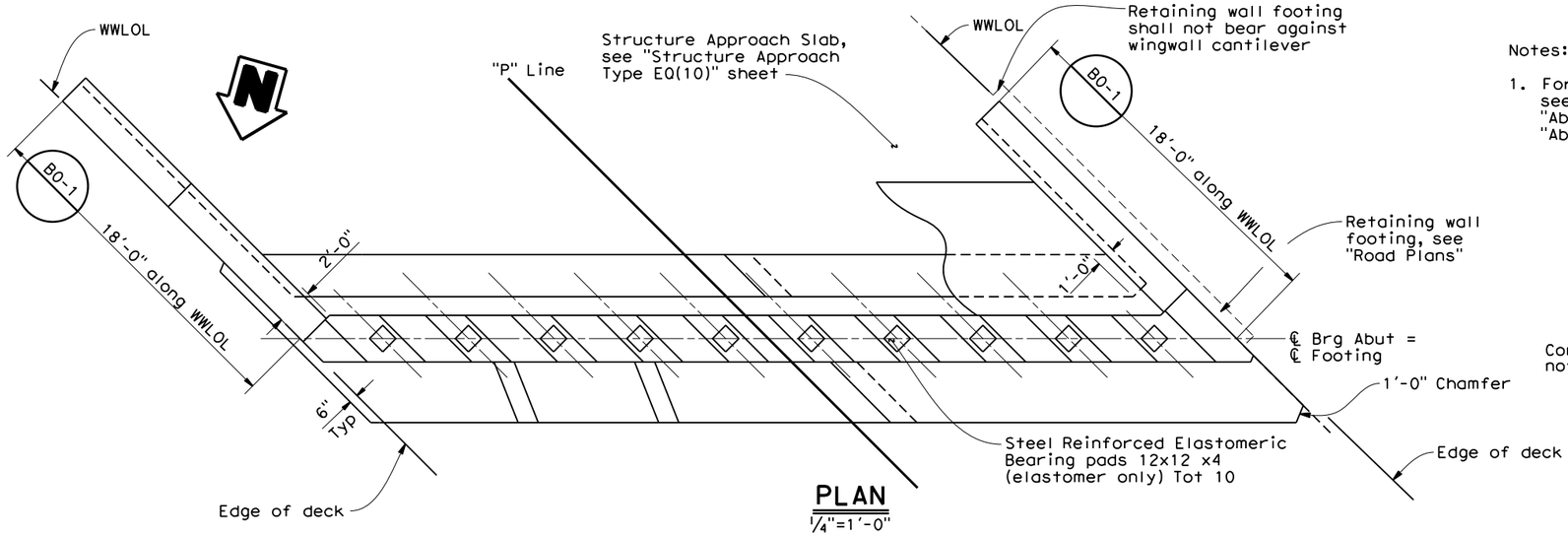

PLAN
1/4"=1'-0"

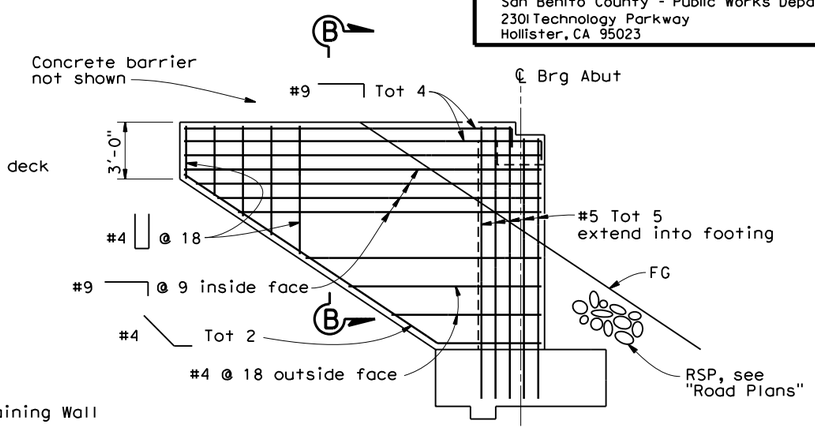

TYPICAL WINGWALL ELEVATION
No Scale

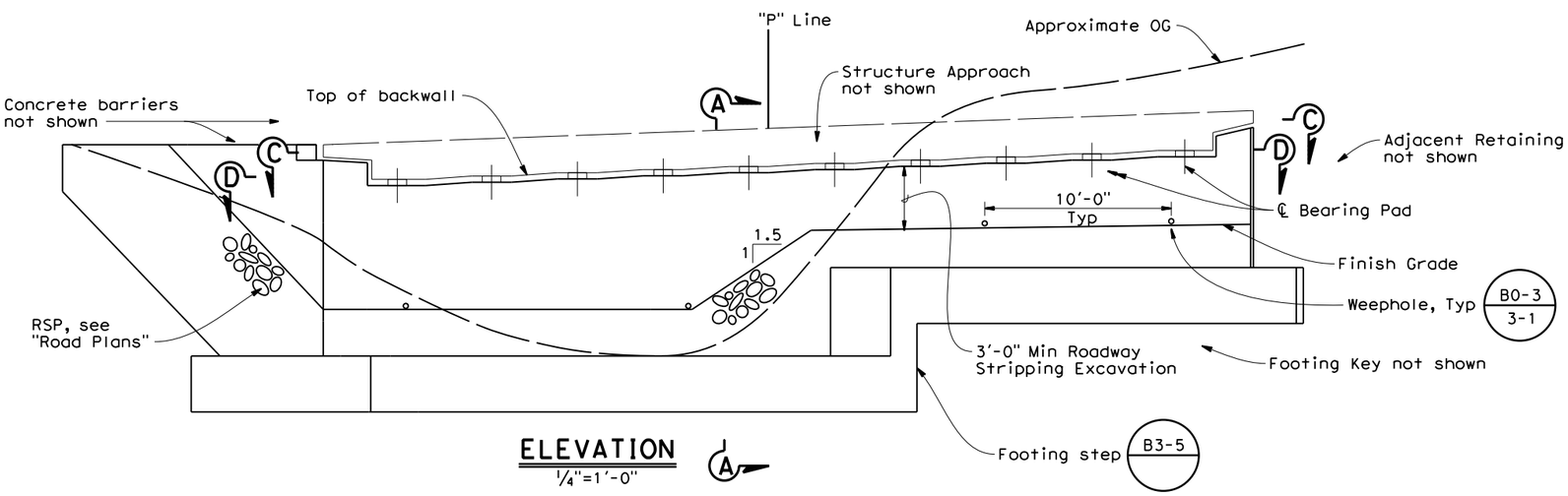

ELEVATION
1/4"=1'-0"

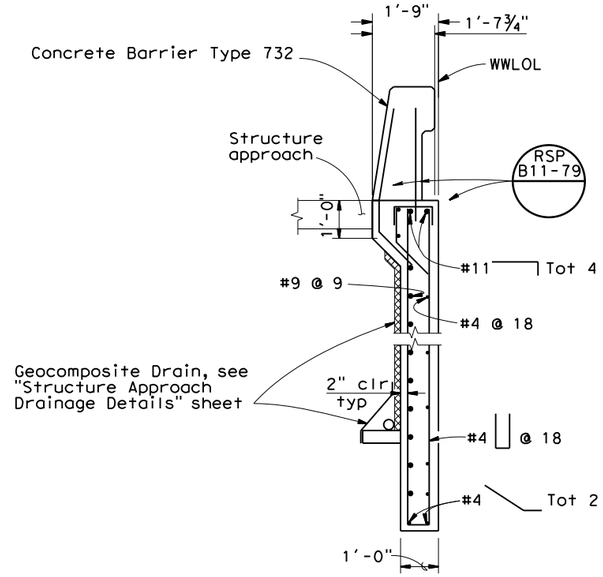

SECTION B-B
1/2"=1'-0"

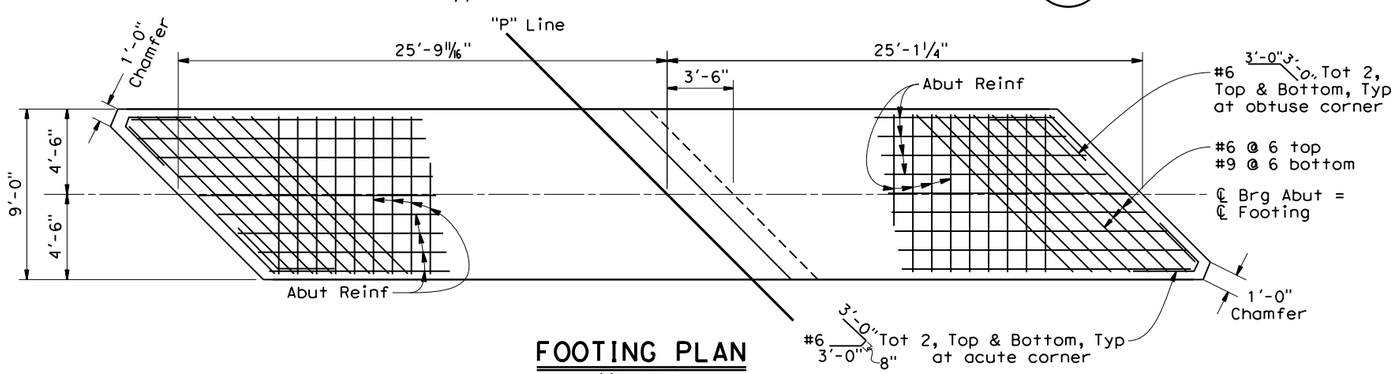

FOOTING PLAN
1/4"=1'-0"

DESIGN	BY S. McCauley	CHECKED X	
DETAILS	BY B. Maechler	CHECKED X	
QUANTITIES	BY X	CHECKED X	

X — DESIGN OVERSIGHT
X — SIGN OFF DATE

PREPARED FOR THE SAN BENITO COUNTY DEPARTMENT OF PUBLIC WORKS

PROJECT ENGINEER

BRIDGE NO. 43C0070
POST MILE

PANOCHE RD BRIDGE (REPLACE)

ABUTMENT 3 LAYOUT

DESIGN DETAIL SHEET (ENGLISH) (REV.7/16/10)

ORIGINAL SCALE IN INCHES FOR REDUCED PLANS 0 1 2 3

UNIT:
PROJECT NUMBER & PHASE:
CONTRACT NO.:

DISREGARD PRINTS BEARING EARLIER REVISION DATES

REVISION DATES 1/22/13

SHEET 6 OF 13

FILE => S:\Client\San Benito Cnty - S70\S70-300 Panoche Rd\CAD\bridge\S70300a-f-a01_1o2.dgn

USERNAME => Andrew.Mitchell TIME PLOTTED => 3:54:31 PM DATE PLOTTED => 11/5/2020

DIST	COUNTY	ROUTE	SHEET No	TOTAL SHEETS
05	SBt	PANOCHE ROAD	24	33

REGISTERED CIVIL ENGINEER 11/05/20 DATE

PRELIMINARY PLANS

PLANS APPROVAL DATE

The identity or its officers or agents shall not be responsible for the accuracy or completeness of electronic copies of this plan sheet.

REGISTERED PROFESSIONAL ENGINEER Scott McCauley No. 71495 Exp. 12-31-21 CIVIL STATE OF CALIFORNIA

QUINCY ENGINEERING 11017 Cobblerock Dr #100 Rancho Cordova, CA 95670

San Benito County - Public Works Department
2301 Technology Parkway
Hollister, CA 95023

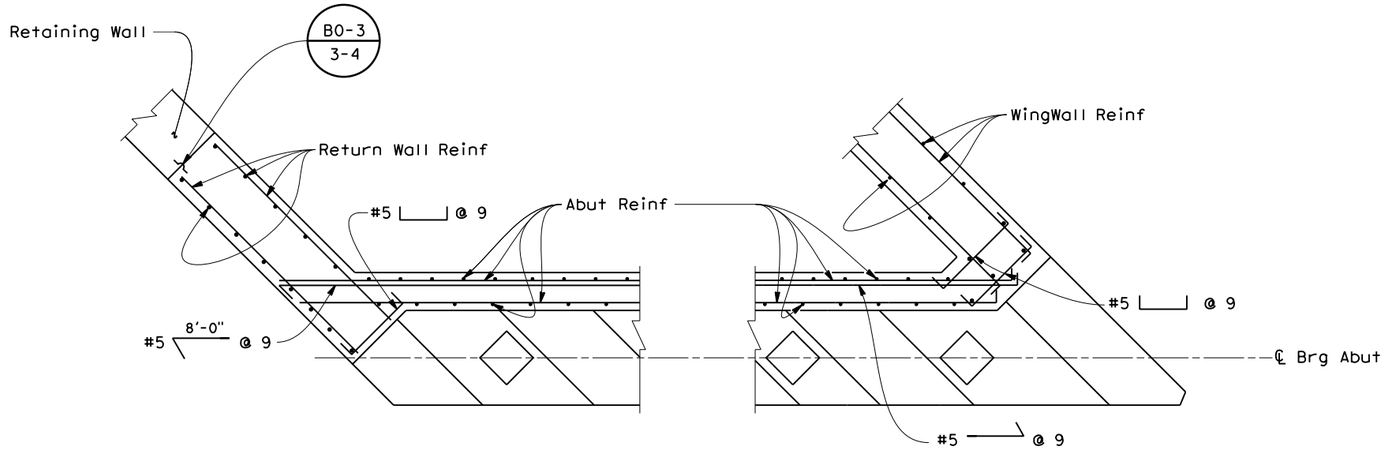

Note: Abut 1 shown, Abut 3 similar

SECTION C-C

½"=1'-0"

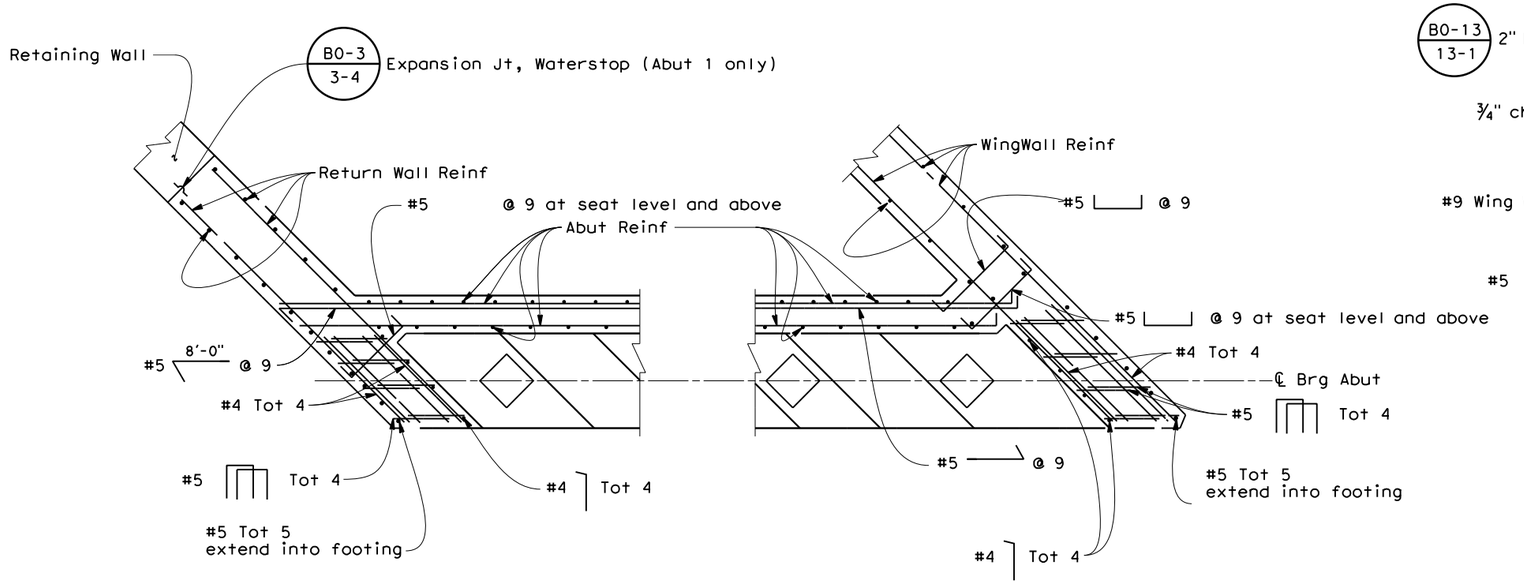

SECTION D-D

½"=1'-0"

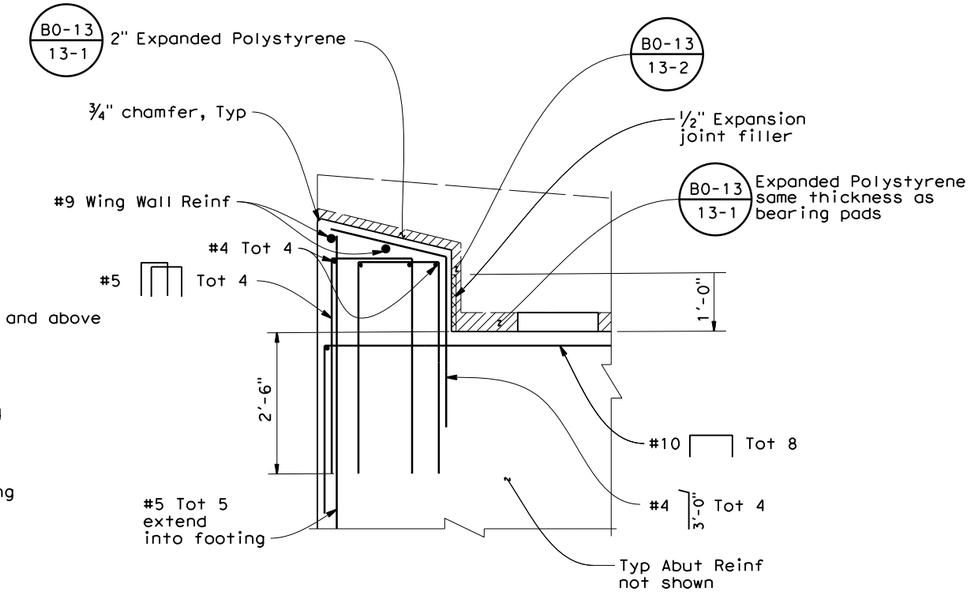

SHEAR KEY ELEVATION

¾"=1'-0"

X DESIGN OVERSIGHT	DESIGN	BY S. McCauley	CHECKED X	PREPARED FOR THE SAN BENITO COUNTY DEPARTMENT OF PUBLIC WORKS
X SIGN OFF DATE	DETAILS	BY B. Maechler	CHECKED X	
	QUANTITIES	BY X	CHECKED X	

PROJECT ENGINEER

BRIDGE NO. 43C0070

POST MILE

PANOCHE RD BRIDGE (REPLACE)

ABUTMENT DETAILS NO.1

DESIGN DETAIL SHEET (ENGLISH) (REV.7/16/10)

ORIGINAL SCALE IN INCHES FOR REDUCED PLANS 0 1 2 3

UNIT:
PROJECT NUMBER & PHASE:
CONTRACT NO.:

DISREGARD PRINTS BEARING EARLIER REVISION DATES 1/22/13

REVISION DATES

SHEET 7 OF 13

FILE => S:\Client\San Benito Cnty - S70\S70-300 Panoche Rd\CAD\bridge\S70300a-f-a01dt01.dgn

USERNAME => Andrew.Mitchell PLOTTED => 11/5/2020 TIME PLOTTED => 3:54:38 PM

DIST	COUNTY	ROUTE	SHEET No	TOTAL SHEETS
05	SBt	PANOCHE ROAD	25	33

REGISTERED CIVIL ENGINEER — DATE 11/05/20

PRELIMINARY PLANS

PLANS APPROVAL DATE

REGISTERED PROFESSIONAL ENGINEER — Scott McCauley — No. 71495 — Exp. 12-31-21 — CIVIL — STATE OF CALIFORNIA

The identity or its officers or agents shall not be responsible for the accuracy or completeness of electronic copies of this plan sheet.

QUINCY ENGINEERING 11017 Cobblerock Dr #100 Rancho Cordova, CA 95670

San Benito County - Public Works Department
2301 Technology Parkway
Hollister, CA 95023

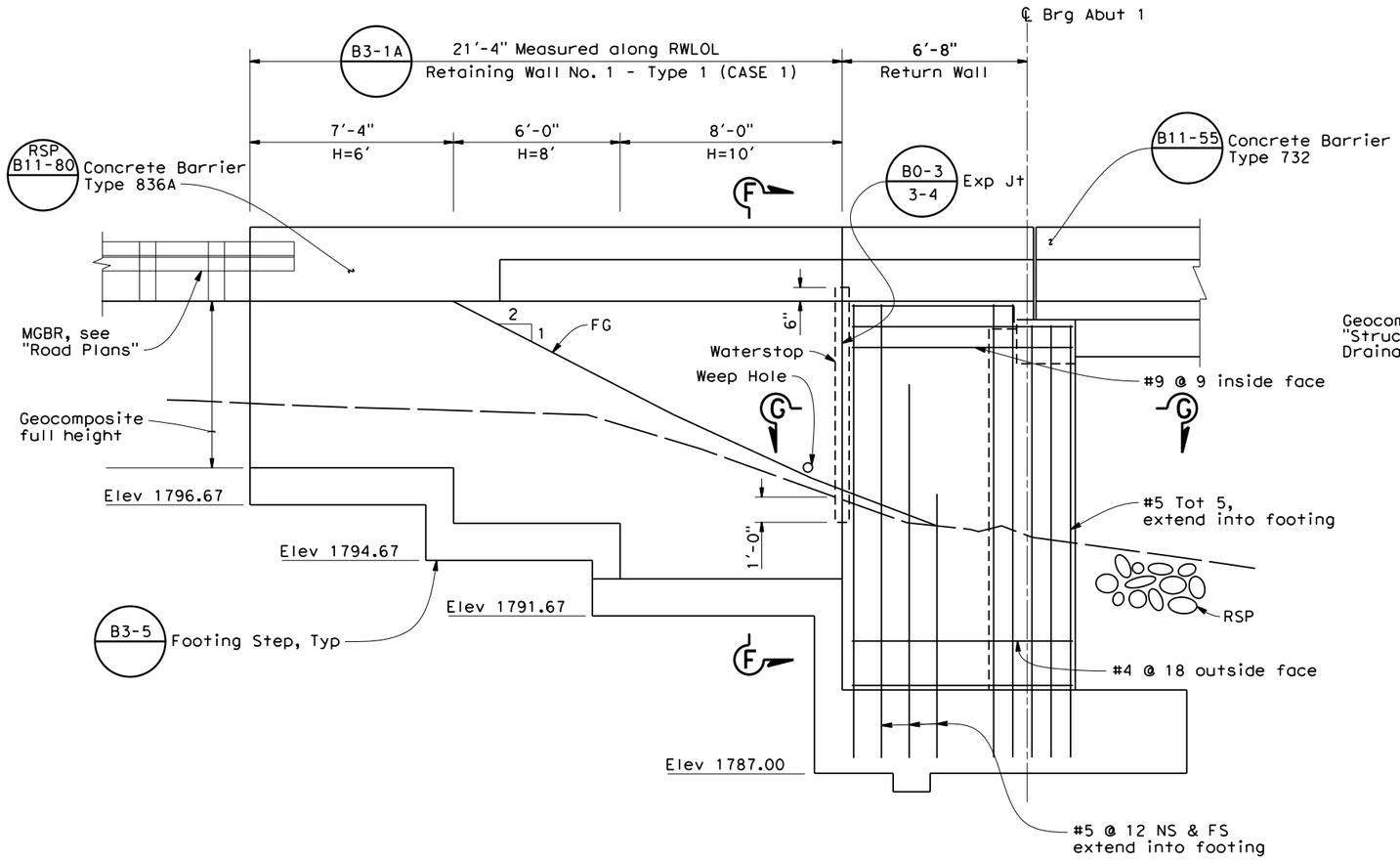

ABUTMENT 1 SOUTH ELEVATION

3/8"=1'-0"

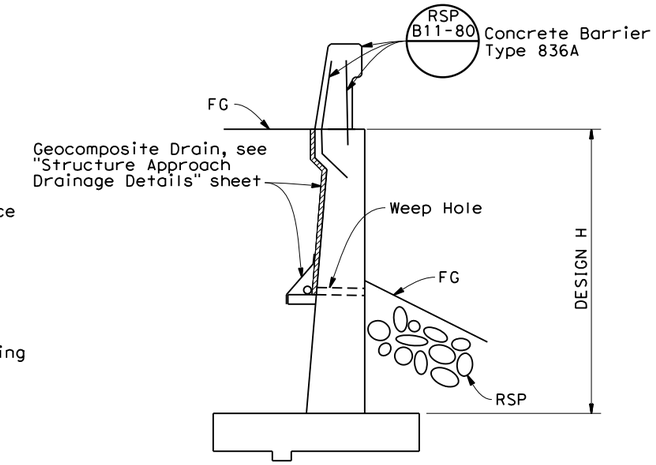

SECTION F-F

3/8"=1'-0"

Notes:

1. Top of wall elevations shall match roadway grades. See "Road Plans."

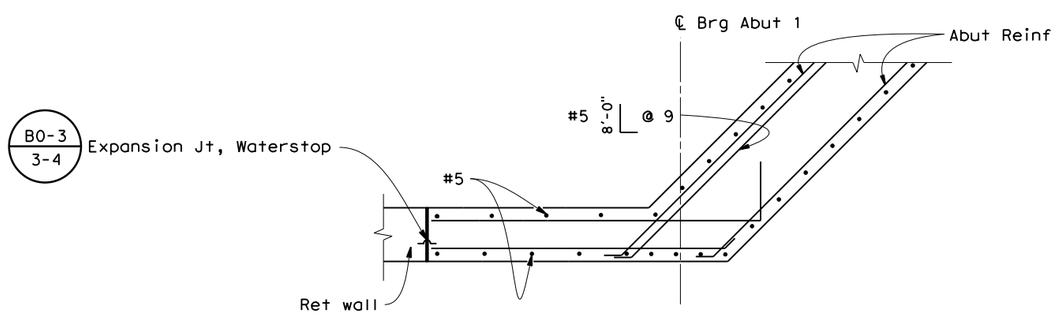

SECTION G-G

1/2"=1'-0"

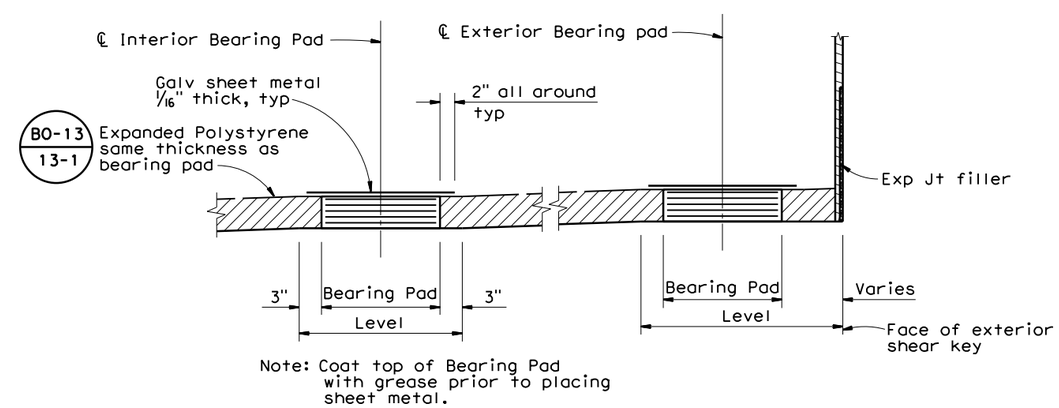

BEARING PAD DETAIL

No Scale

X
DESIGN OVERSIGHT
X
SIGN OFF DATE

	BY	CHECKED
DESIGN	S. McCauley	X
DETAILS	B. Maechler	X
QUANTITIES	X	X

PREPARED FOR THE SAN BENITO COUNTY DEPARTMENT OF PUBLIC WORKS

PROJECT ENGINEER

BRIDGE NO. 43C0070
POST MILE

PANOCHE RD BRIDGE (REPLACE)

ABUTMENT DETAILS NO.2

DESIGN DETAIL SHEET (ENGLISH) (REV.7/16/10)

ORIGINAL SCALE IN INCHES FOR REDUCED PLANS 0 1 2 3

UNIT:
PROJECT NUMBER & PHASE:
CONTRACT NO.:

DISREGARD PRINTS BEARING EARLIER REVISION DATES 1/22/13

SHEET 8 OF 13

FILE => S:\Client\San Benito Cnty - S70\S70-300 Panoche Rd\CAD\bridge\S70300a-f-a01dt02.dgn

USERNAME => Andrew.Mifsud@ PLOTTED => 11/5/2020 TIME PLOTTED => 3:54:45 PM

DIST	COUNTY	ROUTE	SHEET No	TOTAL SHEETS
05	SBt	PANOCHE ROAD	27	33

REGISTERED CIVIL ENGINEER — DATE 11/05/20

PRELIMINARY PLANS

PLANS APPROVAL DATE

REGISTERED PROFESSIONAL ENGINEER — Scott McCauley — No. 71495 — Exp. 12-31-21 — CIVIL — STATE OF CALIFORNIA

The identity or its officers or agents shall not be responsible for the accuracy or completeness of electronic copies of this plan sheet.

QUINCY ENGINEERING 11017 Cobblerock Dr #100 Rancho Cordova, CA 95670

San Benito County - Public Works Department
2301 Technology Parkway
Hollister, CA 95023

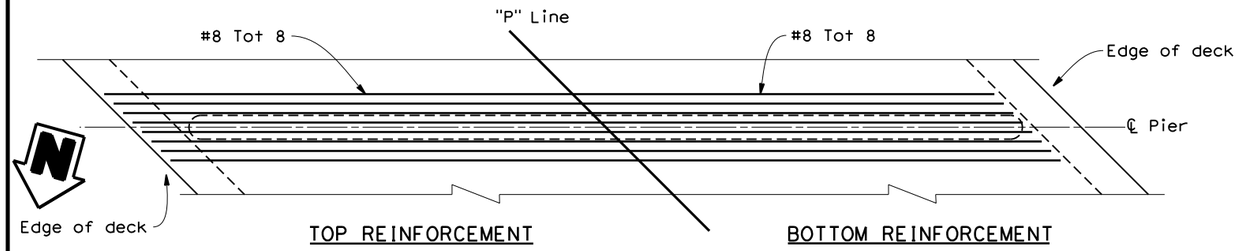

PLAN
1/4"=1'-0"

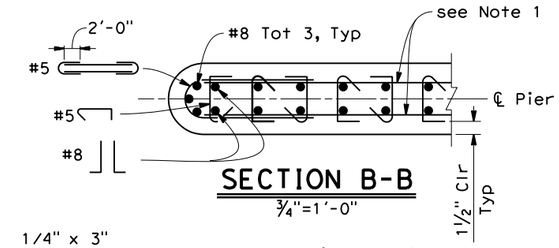

SECTION B-B
3/4"=1'-0"

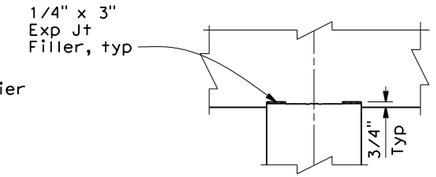

DETAIL 2
1"=1'-0"

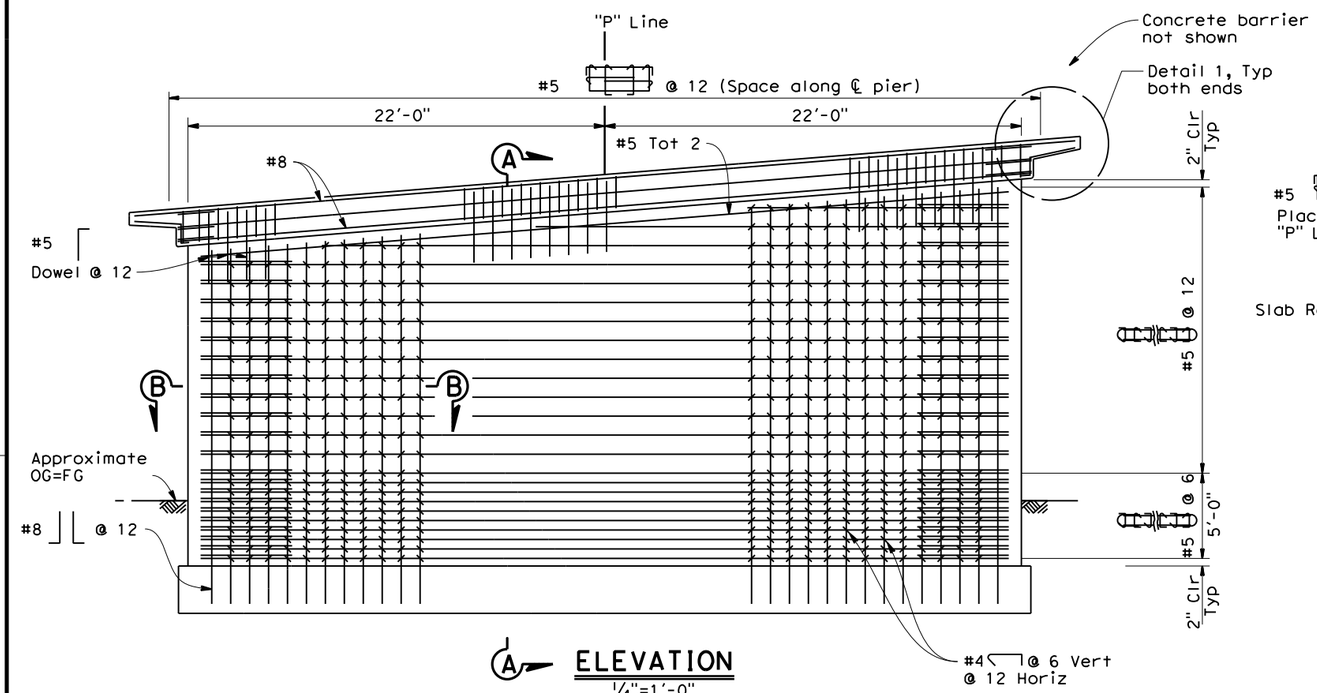

ELEVATION
1/4"=1'-0"

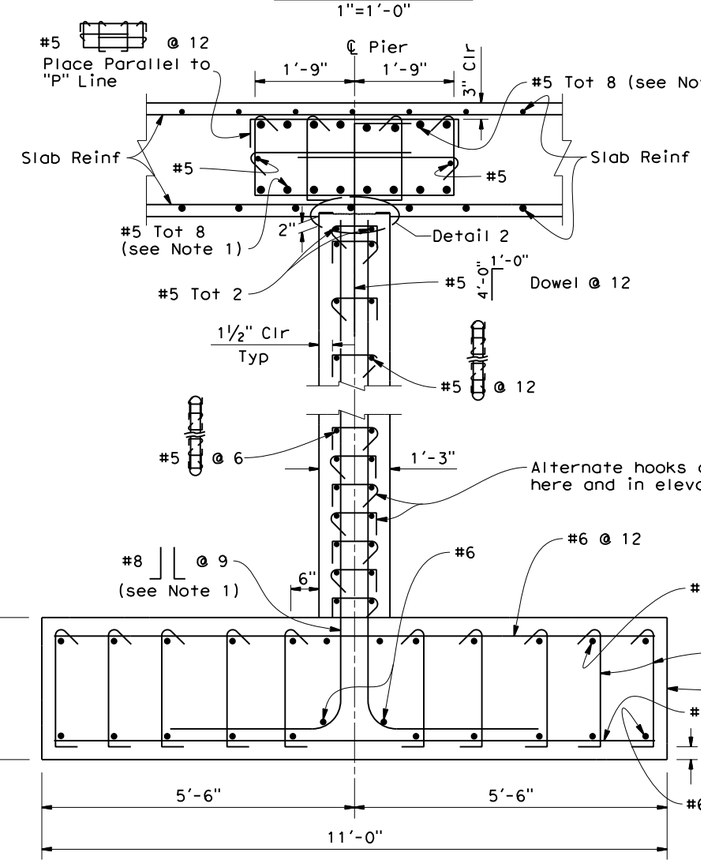

SECTION A-A
3/4"=1'-0"

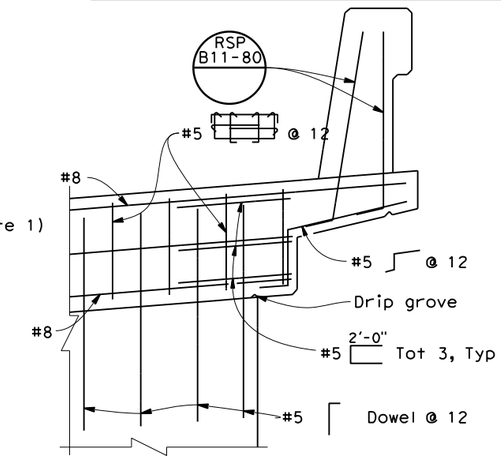

DETAIL 1
3/4"=1'-0"

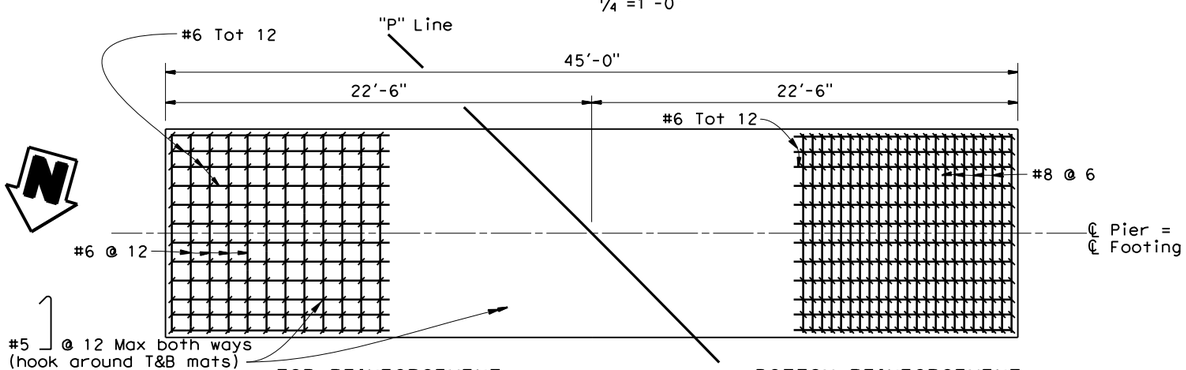

FOOTING PLAN
1/4"=1'-0"

Notes:

1. No splices allowed in main pier and pier cap reinforcement.

X DESIGN OVERSIGHT	DESIGN	BY S. McCauley	CHECKED X	PREPARED FOR THE SAN BENITO COUNTY DEPARTMENT OF PUBLIC WORKS
X SIGN OFF DATE	DETAILS	BY B. Maechler	CHECKED X	PROJECT ENGINEER
	QUANTITIES	BY X	CHECKED X	

BRIDGE NO. 43C0070 — POST MILE

PANOCHE RD BRIDGE (REPLACE)
PIER DETAILS

DESIGN DETAIL SHEET (ENGLISH) (REV.7/16/10)

ORIGINAL SCALE IN INCHES FOR REDUCED PLANS 0 1 2 3

UNIT:
PROJECT NUMBER & PHASE:
CONTRACT NO.:

DISREGARD PRINTS BEARING EARLIER REVISION DATES

REVISION DATES 1/22/13

SHEET 9 OF 13

FILE => S:\Client\San Benito Cnty - S70\S70-300 Panoche Rd\CAD\bridge\S70300a-h-b01dt01.dgn

USERNAME => Andrew.Mitchell PLOTTED => 11/5/2020 TIME PLOTTED => 3:54:59 PM

DIST	COUNTY	ROUTE	SHEET No	TOTAL SHEETS
05	SBt	PANOCHE ROAD	28	33

REGISTERED CIVIL ENGINEER — DATE 11/05/20

PRELIMINARY PLANS

PLANS APPROVAL DATE

REGISTERED PROFESSIONAL ENGINEER — Scott McCauley — No. 71495 — Exp. 12-31-21 — CIVIL — STATE OF CALIFORNIA

The identity or its officers or agents shall not be responsible for the accuracy or completeness of electronic copies of this plan sheet.

QUINCY ENGINEERING 11017 Cobblerock Dr #100 Rancho Cordova, CA 95670

San Benito County - Public Works Department
2301 Technology Parkway
Hollister, CA 95023

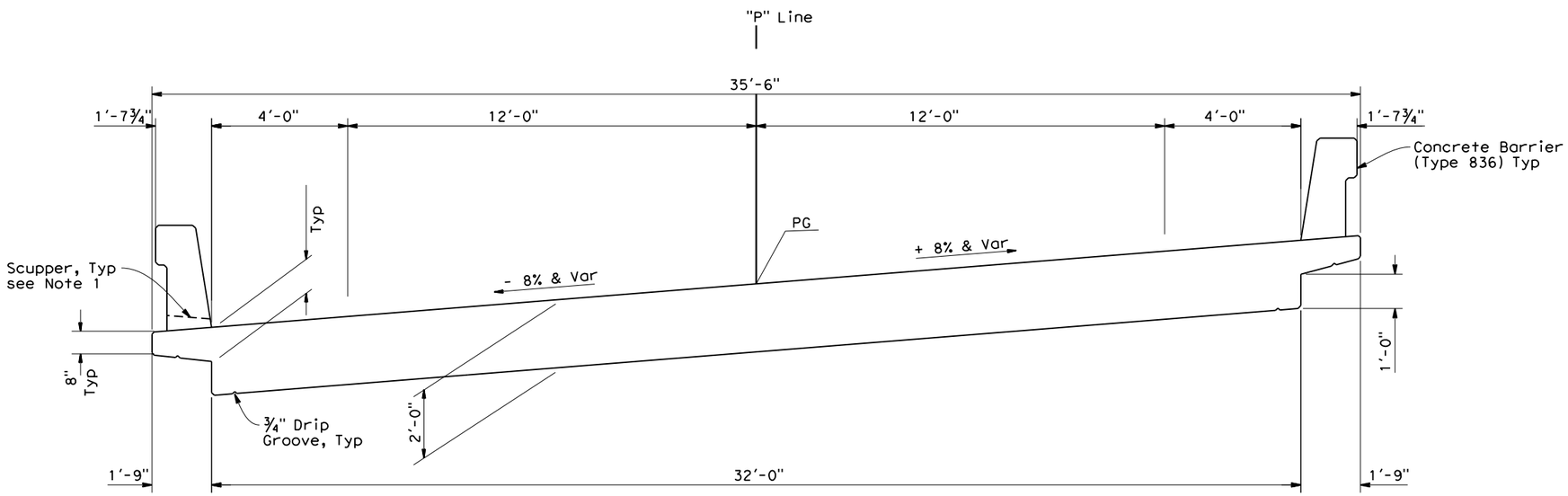

TYPICAL SECTION

½"=1'-0"

B7-8 | RSP B11-79 | RSP B11-80

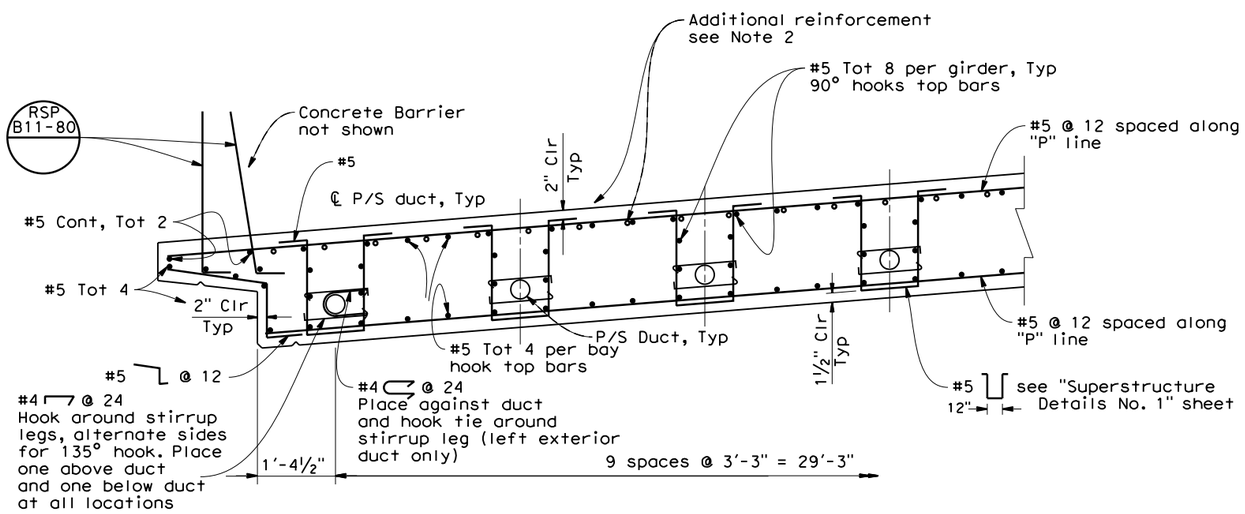

PART TYPICAL SECTION

¾"=1'-0"

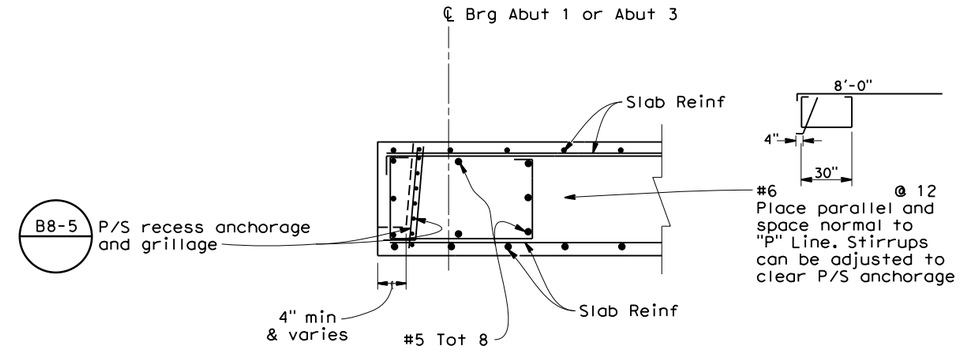

END DIAPHRAGM

¾"=1'-0"

Notes:

1. For location of scuppers, see "Superstructure Details No. 1" sheet.
2. For additional reinforcement, see "Superstructure Details No. 2" sheet.

DESIGN	BY S. McCauley	CHECKED X	
DETAILS	BY B. Maechler	CHECKED X	
QUANTITIES	BY X	CHECKED X	

X — DESIGN OVERSIGHT
X — SIGN OFF DATE

PREPARED FOR THE SAN BENITO COUNTY DEPARTMENT OF PUBLIC WORKS

PROJECT ENGINEER

BRIDGE NO. 43C0070
POST MILE

PANOCHE RD BRIDGE (REPLACE)

TYPICAL SECTION

DESIGN DETAIL SHEET (ENGLISH) (REV.7/16/10)

ORIGINAL SCALE IN INCHES FOR REDUCED PLANS 0 1 2 3

UNIT:
PROJECT NUMBER & PHASE:
CONTRACT NO.:

DISREGARD PRINTS BEARING EARLIER REVISION DATES 1/22/13

REVISION DATES | SHEET 10 | OF 13

FILE => S:\Client\San Benito Cnty - S70\S70-300 Panoche Rd\CAD\bridge\S70300a-k-ts01.dgn

USERNAME => Andrew.Mitchell PLOTTED => 11/5/2020 TIME PLOTTED => 3:55:07 PM

DIST	COUNTY	ROUTE	SHEET No	TOTAL SHEETS
05	SBt	PANOCHE ROAD	29	33

REGISTERED CIVIL ENGINEER — DATE 11/05/20

PRELIMINARY PLANS

PLANS APPROVAL DATE

REGISTERED PROFESSIONAL ENGINEER — Scott McCauley — No. 71495 — Exp. 12-31-21 — CIVIL — STATE OF CALIFORNIA

The identity or its officers or agents shall not be responsible for the accuracy or completeness of electronic copies of this plan sheet.

QUINCY ENGINEERING
11017 Cobblerock Dr #100
Rancho Cordova, CA 95670

San Benito County - Public Works Department
2301 Technology Parkway
Hollister, CA 95023

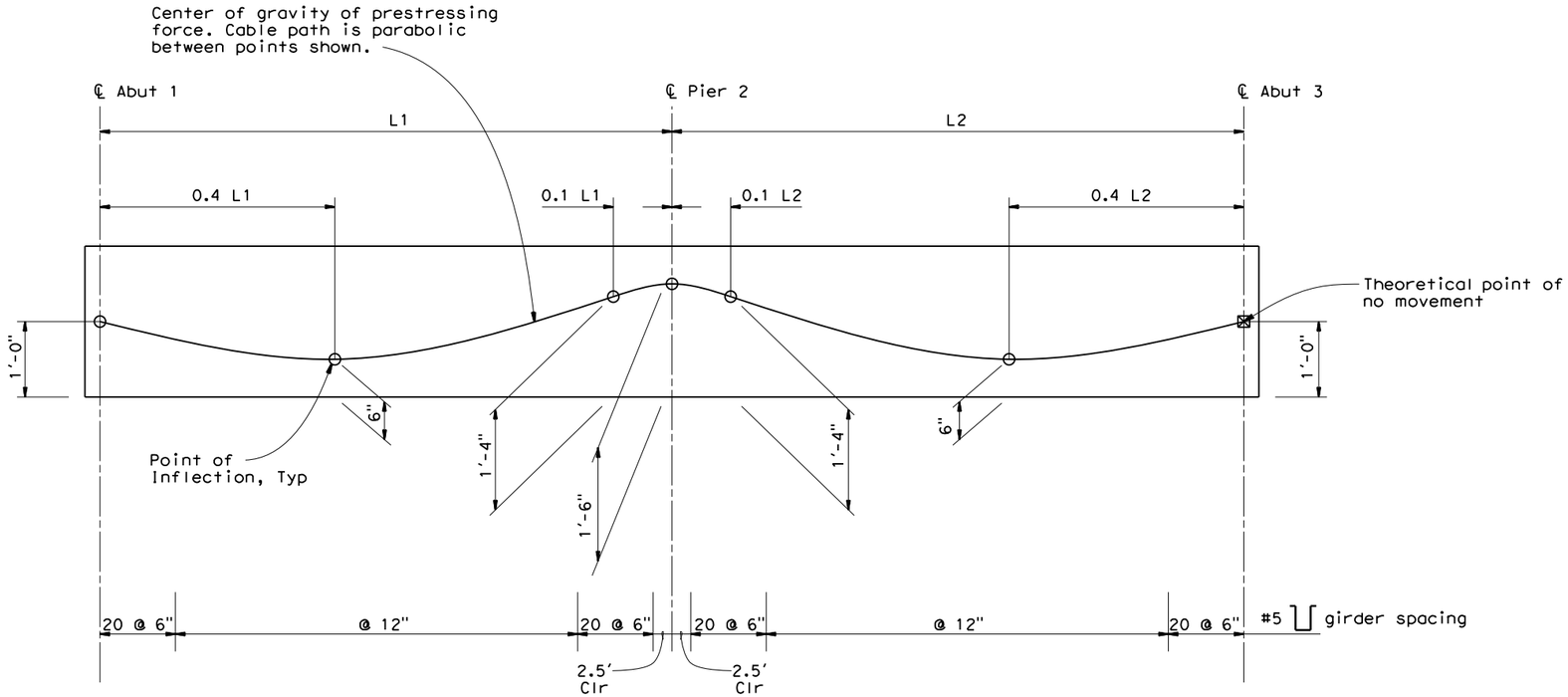

LONGITUDINAL SECTION

NO SCALE

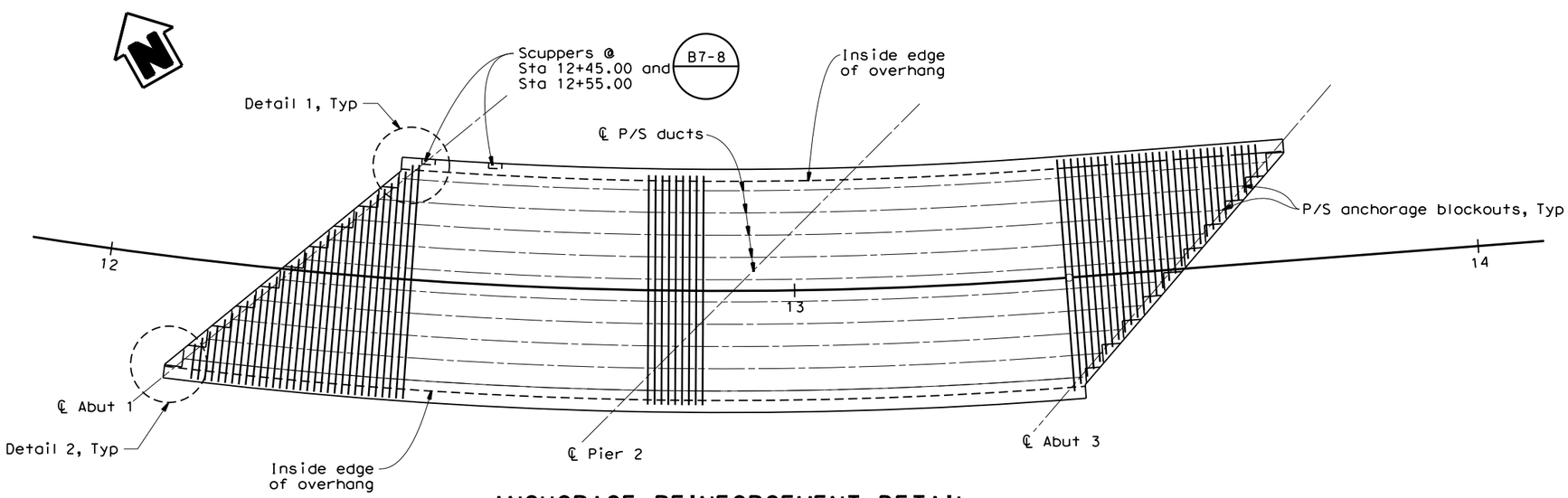

ANCHORAGE REINFORCEMENT DETAIL

1"=10'

Notes:

1. For "Details 1" and "Detail 2", see "Superstructure Details No. 2" sheet.

PRESTRESSING NOTES

270 KSI Low Relaxation Strand:

P_{jack} = 10,000 kips

Anchor Set = 3/8 in

Total Number of P/S ducts = 10

Distribution of prestress force (Pjack) between ducts shall not exceed the ratio of 3:2.
Maximum final force variation between ducts shall not exceed 300 kips.
Concrete: f'_c = 5000 psi @ 28 days

f'_{ci} = 4000 psi @ time of stressing

Contractor shall submit elongation calculations based on initial stress at

☒ = 0.95 times jacking stress.

μ = 0.15 K = 0.0002

Jacking shall be performend from abutment 1 only.

X
DESIGN OVERSIGHT
X
SIGN OFF DATE

	BY	CHECKED
DESIGN	S. McCauley	X
DETAILS	B. Maechler	X
QUANTITIES	X	X

PREPARED FOR THE SAN BENITO COUNTY DEPARTMENT OF PUBLIC WORKS

PROJECT ENGINEER

BRIDGE NO. 43C0070
POST MILE

PANOCHE RD BRIDGE (REPLACE)

SUPERSTRUCTURE DETAILS No. 1

DESIGN DETAIL SHEET (ENGLISH) (REV.7/16/10)

ORIGINAL SCALE IN INCHES FOR REDUCED PLANS 0 1 2 3

UNIT:
PROJECT NUMBER & PHASE:
CONTRACT NO.:

DISREGARD PRINTS BEARING EARLIER REVISION DATES 1/22/13

REVISION DATES | SHEET 11 | OF 13

FILE => S:\Client\San Benito Cnty - S70\S70-300 Panoche Rd\CAD\bridge\S70300a-m-1sec.dgn

USERNAME => Andrew.Mitchell | DATE/TIME PLOTTED => 11/5/2020 3:55:15 PM

DIST	COUNTY	ROUTE	SHEET No	TOTAL SHEETS
05	SBt	PANOCHE ROAD	30	33

REGISTERED CIVIL ENGINEER 11/05/20 DATE

PRELIMINARY PLANS

PLANS APPROVAL DATE

The identity or its officers or agents shall not be responsible for the accuracy or completeness of electronic copies of this plan sheet.

REGISTERED PROFESSIONAL ENGINEER Scott McCauley No. 71495 Exp. 12-31-21 CIVIL STATE OF CALIFORNIA

QUINCY ENGINEERING 11017 Cobblerock Dr #100 Rancho Cordova, CA 95670

San Benito County - Public Works Department
2301 Technology Parkway
Hollister, CA 95023

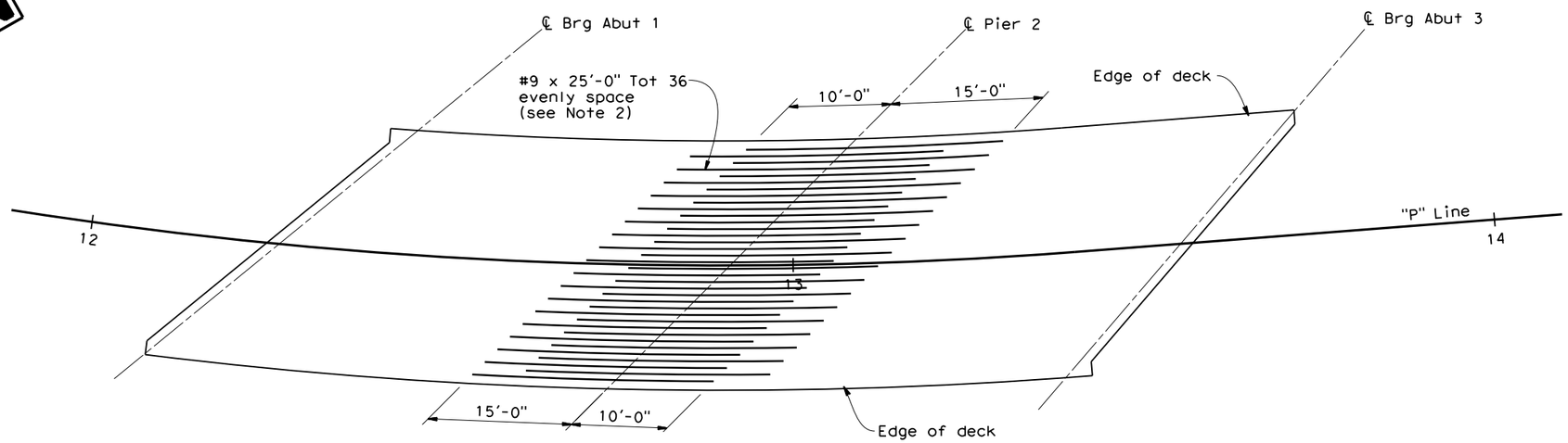

ADDITIONAL TOP SLAB REINFORCEMENT

1"=10'

Notes:

1. For location of typical top and bottom slab reinforcement, see "Typical Section" sheet.
2. No splices permitted in additional slab reinforcement.

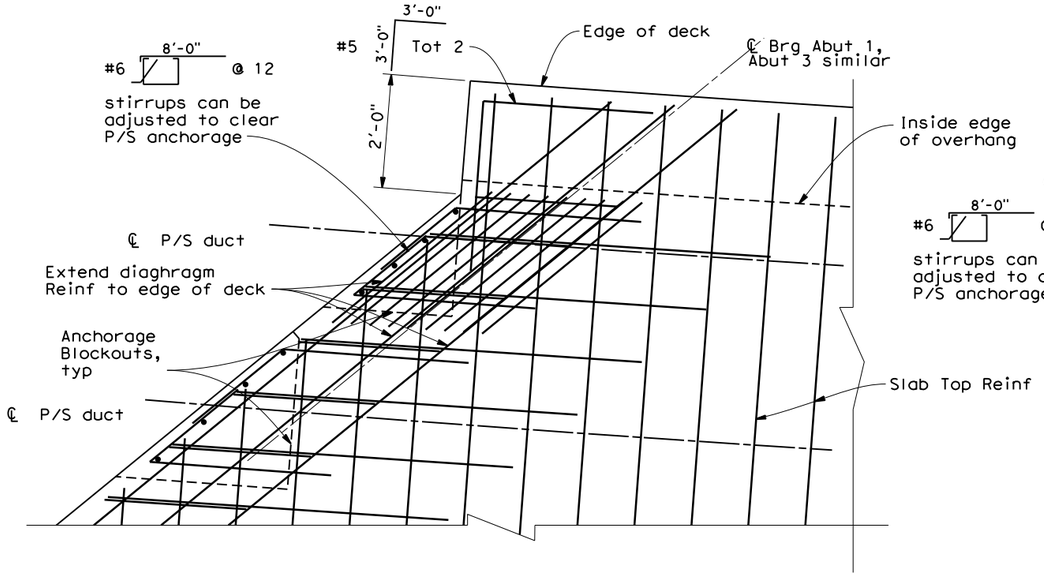

DETAIL 1 B8-5

3/4"=1'-0"

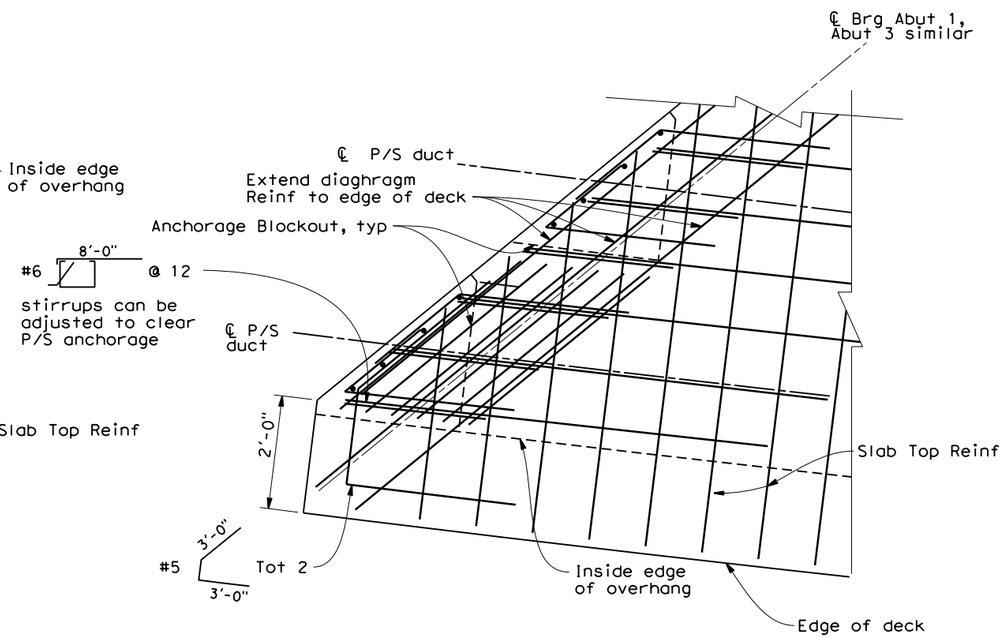

DETAIL 2 B8-5

3/4"=1'-0"

X DESIGN OVERSIGHT	DESIGN	BY S. McCauley	CHECKED X	PREPARED FOR THE SAN BENITO COUNTY DEPARTMENT OF PUBLIC WORKS	PROJECT ENGINEER
X SIGN OFF DATE	DETAILS	BY B. Maechler	CHECKED X		
	QUANTITIES	BY X	CHECKED X		

BRIDGE NO. 43C0070 | POST MILE

PANOCHE RD BRIDGE (REPLACE)

SUPERSTRUCTURE DETAILS No. 2

DESIGN DETAIL SHEET (ENGLISH) (REV.7/16/10)

ORIGINAL SCALE IN INCHES FOR REDUCED PLANS 0 1 2 3

UNIT:
PROJECT NUMBER & PHASE: CONTRACT NO.:

DISREGARD PRINTS BEARING EARLIER REVISION DATES 1/22/13

SHEET 12 OF 13

FILE => S:\Client\San Benito Cnty - S70\S70-300 Panoche Rd\CAD\bridge\S70300a-o-gir_rf01.dgn

USERNAME => Andrew.Mifsud@ DATE PLOTTED => 11/5/2020 TIME PLOTTED => 3:55:22 PM

Appendix D Hydraulic Analysis

1243 Alpine Road, Suite 108
Walnut Creek, CA 94596
Phone: 925.941.0017
Fax: 925.941.0018
www.wreco.com

Memorandum

Date: March 20, 2019

To: Carolyn Davis, Quincy Engineering, Inc.

From: Han-Bin Liang, WRECO

Project: Panoche Road Bridge

Subject: Upstream Channel Bank Protection Analysis

Introduction

Panoche Road at Tres Pinos Creek Bridge Replacement Project (Project) proposes to remove and replace existing Panoche Road bridge over Tres Pinos Creek (Bridge No. 43C0027) with a new longer and wider bridge on an improved roadway alignment.

WRECO's hydraulic analysis of Tres Pinos Creek in the Project vicinity indicated that the proposed Project would result in increased average channel velocities upstream (north) of the bridge (relative to the existing condition). Concerns arose that the increased velocities could negatively affect the soils on the east bank by increasing their erosive potential. The erosion of these soils could in turn have the potential to negatively affect the adjacent spring water box, which is used by the Wattis' Ranch as a water source to capture groundwater from the aquifer.

The purpose of this memorandum is to summarize the velocity differences associated with Tres Pinos Creek for the existing and proposed Project conditions during the 100-year storm, and to size rock slope protection to protect the eastern bank upstream of the proposed bridge. Additional details of the hydraulic analysis are documented in the Project's Bridge Design Hydraulic Study report.

Hydraulic Analysis Velocities

The comparison of the average channel velocities at the cross sections upstream of the Project site are summarized in Table 1.

Table 1. 100-Year Velocity Comparison

River Station	Distance to Proposed Bridge (feet)	Average Channel Velocity (feet per second)	
		Existing	Proposed
1525	225	4.1	6.2
1316	15	3.9	7.1

Based on the hydraulic analysis, the proposed condition would result in an approximately 2 to 3 feet per second increase in average channel velocity at the specified locations. The empirical velocity distributions at the cross sections are included in the appendices. Graphical depictions of the velocity distributions are also included for both the existing and proposed conditions.

1243 Alpine Road, Suite 108
Walnut Creek, CA 94596
Phone: 925.941.0017
Fax: 925.941.0018
www.wreco.com

Recommendations

In order to address the increases in average channel velocity, rock slope protection (RSP) is proposed to be placed at the eastern bank upstream of the existing bridge. RSP generally consists of rocks on channel and structure boundaries to limit the effects of erosion. It is the most common type of scour countermeasure due to its general availability, ease of installation, and relatively low cost. It is assumed that the creek bed and bank would not be excavated for the installation of the RSP countermeasures. The avoidance of excavation would help to minimize potential impacts to the aquifer.

Rock Slope Protection Calculations

Calculations were performed using the results of the hydraulic analysis for the proposed condition to evaluate the size of RSP needed to protect the channel bank from potential erosion. The primary design concern for RSP is to determine the median particle size such that the material will not be displaced during the peak design flows. Calculations were based upon the 100-year storm. The equations from the California Department of Transportation's (Caltrans') Highway Design Manual (HDM) were used to estimate the weight of the RSP required to protect the channel bank (2018). The calculated minimum RSP classes are presented in Table 2. The RSP sizing calculations are included in the appendices.

Table 2. Results of RSP Sizing Analysis

River Station	Distance to Proposed Bridge (feet)	Minimum RSP Sizing
1525	225	Class IV 300 pounds median weight 15 inches median particle diameter
1316	15	Class V 1/4 ton median weight 18 inches median particle diameter

Based on the calculations, the minimum RSP class can transition from Class IV at River Station 1525 to Class V at River Station 1316. Alternatively, Class V RSP can be placed throughout the affected reach, which would provide additional protection and simplicity of installation. According to the HDM, the minimum thickness of the RSP layer needs to be 1.5 times the median particle diameter or the maximum diameter, whichever is greater. A typical cross section recommended by the Federal Highway Administration (FHWA) for mounded toe RSP is shown in Figure 1.

1243 Alpine Road, Suite 108
Walnut Creek, CA 94596
Phone: 925.941.0017
Fax: 925.941.0018
www.wreco.com

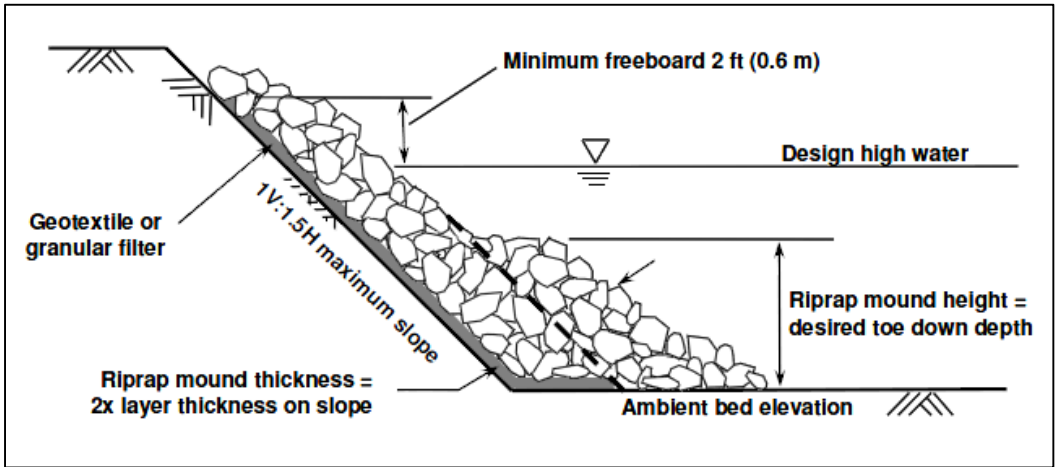

Figure 1. Mounded Toe Typical Cross Section

Source: Federal Highway Administration

The minimum layer thicknesses for the RSP are presented in Table 3.

Table 3. Minimum RSP Layer Thicknesses

Outside Layer		Inside Layer		Total Layer Thickness (ft)
RSP Class	Minimum Layer Thickness (ft)	RSP Class	Minimum Layer Thickness (ft)	
IV	2.5	N/A	N/A	2.5
V	3.0	II	1.5	4.5

The mounded thickness needs to be twice as thick as the layer thickness, which would be 5 ft for the Class IV RSP, and 9 ft for the Class V and Class II RSP system. The mounded height is recommended to be a minimum of 6 ft. The placement method for these classes of RSP is Method B, which involves dumping the rock near its planned location, and working the rock to its final position with machinery. Class 8 RSP geotextile filter fabric should be placed on the bank as a separator material between the RSP and the channel bank.

References

California Department of Transportation. (2018). Highway Design Manual. 6th Edition HDM Change 12/14/18. <http://www.dot.ca.gov/design/manuals/hdm.html> (Last accessed: March 20, 2019).

Federal Highway Administration. (2009). *Bridge Scour and Stream Instability Countermeasures: Experience, Selection, and Design Guidance.* Hydraulic Engineering Circular No. 23. Third Edition.

1243 Alpine Road, Suite 108
Walnut Creek, CA 94596
Phone: 925.941.0017
Fax: 925.941.0018
www.wreco.com

Appendices

- Hydraulic Analysis Empirical Velocity Distributions
- Rock Slope Protection Calculations

At Upstream Cross Section (River Station 1525)

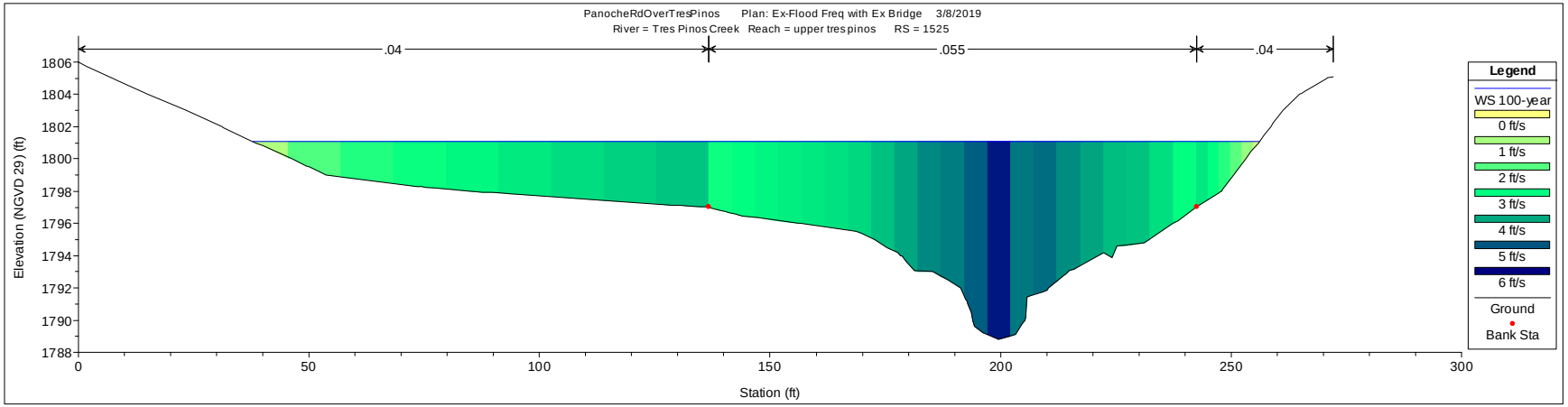

Figure 1. Existing Condition Cross Section

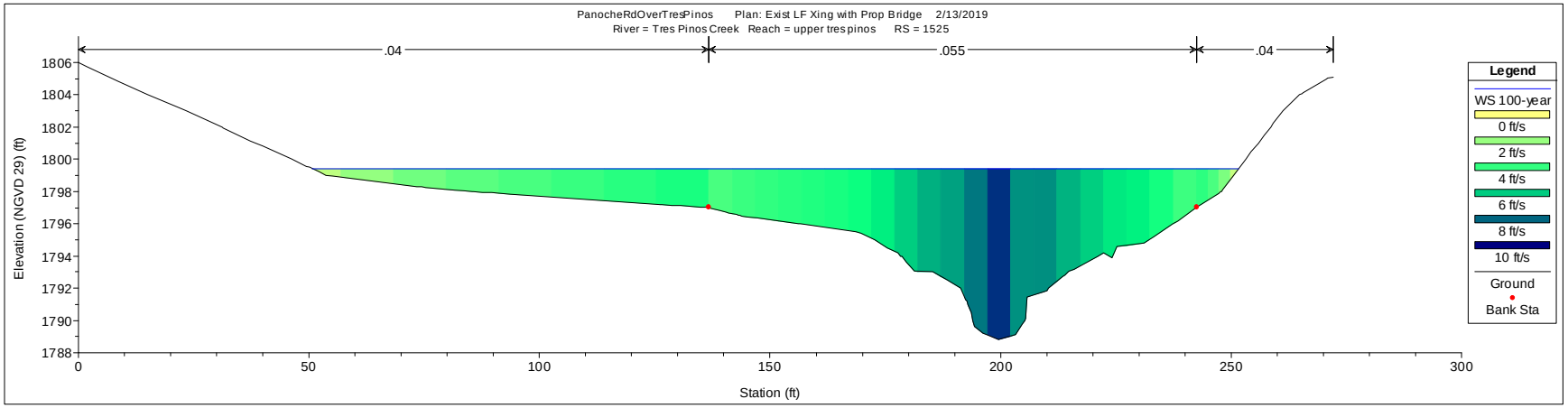

Figure 2. Proposed Condition Cross Section

Table 1. Velocity Comparison at River Station 1525

Segment No.	Left Station (ft)	Right Station (ft)	Velocity (ft/s)		Δ Velocity (ft/s)
			Existing	Proposed	
1	34	46	0.9	N/A	
2	46	57	2.1	1.3	-0.8
3	57	68	2.6	2.1	-0.5
4	68	80	2.9	2.8	-0.1
5	80	91	3.1	3.3	0.2
6	91	103	3.3	3.6	0.4
7	103	114	3.4	3.9	0.5
8	114	125	3.5	4.2	0.7
9	125	137	3.7	4.5	0.9
10	137	142	2.9	3.6	0.7
11	142	147	3.0	3.9	0.9
12	147	152	3.1	4.1	1.0
13	152	157	3.2	4.2	1.1
14	157	162	3.3	4.4	1.1
15	162	167	3.4	4.6	1.2
16	167	172	3.5	4.8	1.3
17	172	177	3.7	5.3	1.6
18	177	182	4.1	6.0	1.9
19	182	187	4.4	6.6	2.2
20	187	192	4.5	6.8	2.3
21	192	197	4.9	7.7	2.8
22	197	202	5.7	9.1	3.3
23	202	207	4.6	7.2	2.6
24	207	212	4.7	7.2	2.5
25	212	217	4.3	6.5	2.1
26	217	222	4.1	6.0	1.9
27	222	227	3.8	5.4	1.7
28	227	232	3.7	5.3	1.6
29	232	237	3.4	4.6	1.3
30	237	242	3.0	3.8	0.9
31	242	245	3.3	4.1	0.9
32	245	247	3.0	3.5	0.6
33	247	250	2.5	2.5	0.0
34	250	252	1.9	1.1	-0.8
35	252	255	1.2	N/A	
36	255	257	0.5	N/A	

At Downstream Cross Section (River Station 1316)

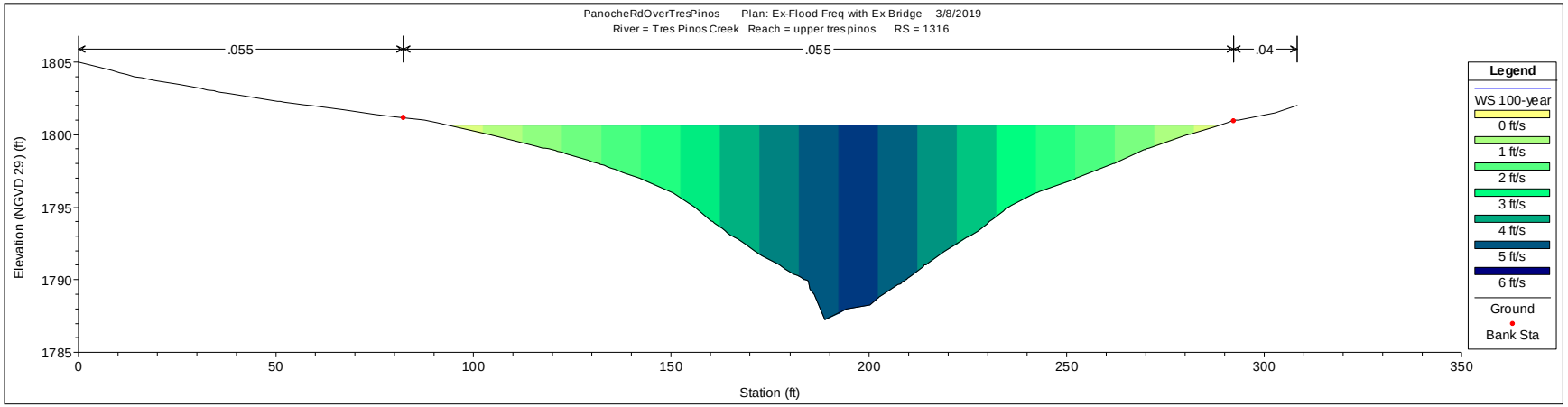

Figure 3. Existing Condition Cross Section

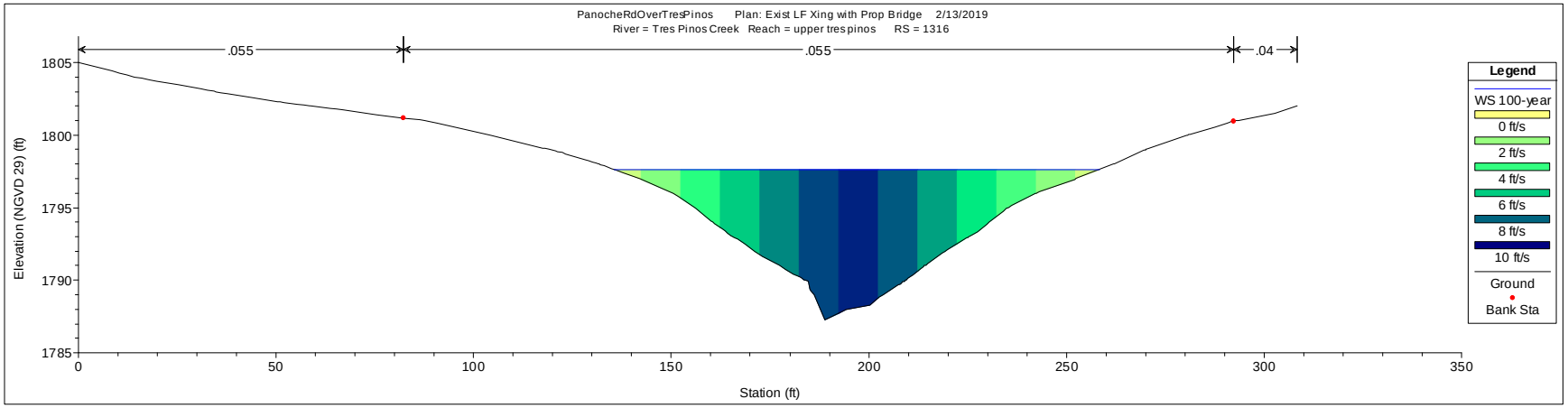

Figure 4. Proposed Condition Cross Section

Table 2. Velocity Comparison at River Station 1316

Segment No.	Left Station (ft)	Right Station (ft)	Velocity (ft/s)		Δ Velocity (ft/s)
			Existing	Proposed	
1	92	102	0.4	N/A	
2	102	112	0.9	N/A	
3	112	122	1.3	N/A	
4	122	132	1.7	N/A	
5	132	142	2.2	1.0	-1.2
6	142	152	2.6	2.4	-0.2
7	152	162	3.2	4.2	1.0
8	162	172	3.9	6.0	2.1
9	172	182	4.5	7.3	2.9
10	182	192	5.0	8.6	3.7
11	192	202	5.3	9.3	4.0
12	202	212	4.9	8.3	3.4
13	212	222	4.3	6.8	2.6
14	222	232	3.7	5.4	1.7
15	232	242	3.0	3.7	0.6
16	242	252	2.6	2.3	-0.3
17	252	262	2.1	1.0	-1.2
18	262	272	1.6	N/A	
19	272	282	1.0	N/A	
20	282	292	0.4	N/A	

Panoche Road Bridge over Tres Pinos Creek
San Benito County, California
Streambank Rock Slope Protection
Calculation guideline from Caltrans Highway Design Manual

Input from HEC-RAS for Proposed Bridge
100-year Flow

Input:

Location along stream:	Upstream	Downstream	
River Station	1525	1316	
V_{avg}	6.2	7.1	ft/s
g	32.2	32.2	ft/s^2
Depth based on	Average	Average	
y	5.4	4.6	ft
S_f	1.1	1.1	
C_s	0.3	0.3	
Cross section location:	Outside of bend	Outside of bend	
C_v	1.25	1.21	

For outside of bends, need R_c and W:

R_c	300	300	ft
W	201	123	ft
C_t	1.0	1.0	
S_g	2.65	2.65	
Type of channel:	Natural	Natural	
V_{des}	10.2	11.0	ft/s
K_1	0.72	0.72	
θ	33.7	33.7	degrees
SS	1.5	1.5	
D_{30}	0.9	1.1	ft
D_{50}	1.1	1.4	ft
D_{50}	13.5	16.4	inches
	IV	V	RSP Class
	300 lb	**1/4 ton**	Median particle weight
	15	**18**	Median particle diameter (inches)

APPENDIX D

GEOTECHNICAL INVESTIGATION REPORT

This page intentionally left blank

(DRAFT)

GEOTECHNICAL INVESTIGATION REPORT

PANOCHE ROAD BRIDGE
(BR. NO. 430070)
SAN BENITO COUNTY, CALIFORNIA
FEDERAL PROJECT NO. BRLS-5943(056)
SAN BENITO COUNTY PROJECT NO. 698

For

QUINCY ENGINEERING, INC.

3247 Ramos Circle
Sacramento, CA 95827

PARIKH CONSULTANTS, INC.

2360 Qume Drive, Suite A
San Jose, CA 95131
(408) 452-9000

February 5, 2013 Job No. 2011-107-FDN

TABLE OF CONTENTS **PAGE NO.**

1.0 SCOPE OF WORK 1
2.0 PROJECT DESCRIPTION 1
3.0 FIELD INVESTIGATION AND TESTING PROGRAM 2
4.0 LABORATORY TESTING PROGRAM 3
5.0 SITE GEOLOGY AND SUBSURFACE CONDITIONS 3
5.1 Site Geology 3
5.2 Subsurface Conditions 4
5.3 Groundwater 4
6.0 SCOUR EVALUATION 5
7.0 CORROSION EVALUATION 5
8.0 SEISMIC RECOMMENDATIONS 5
8.1 Seismic Sources 5
8.2 Seismic Hazards 6
8.3 Seismic Design Criteria 6
9.0 FOUNDATION RECOMMENDATIONS 7
9.1 General 7
9.2 Foundation 7
9.3 Lateral Earth Pressures 9
10.0 RETAINING WALL FOR CUT NEAR SOUTH ABUTMENT 9
11.0 PAVEMENT SECTIONS 10
12.0 GRADING 10
13.0 CONSTRUCTION CONSIDERATIONS 11
13.1 General 11
13.2 Foundation Excavation 11
13.3 Differing Site Conditions 12
14.0 INVESTIGATION LIMITATIONS 12

APPENDIX I **FIGURES**
Site Map (Plate I-1)
Boring Location Map (Plate I-2)
Geologic Map (Plate I-3)
Core Pictures (Plates I-4A to I-4F)

APPENDIX II **LOGS OF TEST BORINGS**

APPENDIX III **LABORATORY TEST RESULTS**

APPENDIX IV **ANALYSES AND CALCULATIONS**
Fault Map (Plate IV-1)
ARS Curve (Plate IV-2)

FOUNDATION REPORT
PANOCHE ROAD BRIDGE (BR. NO. 430070)
SAN BENITO COUNTY, CALIFORNIA

1.0 SCOPE OF WORK

The purpose of this investigation was to evaluate the general subsurface conditions at the project site, to evaluate their engineering properties, and to provide foundation design recommendations for replacing the existing Panoche Road Bridge in the County of San Benito, California. The scope of work performed for this investigation included a review of the readily available geologic literature pertaining to the site, obtaining representative soil and rock samples and logging materials encountered in the exploratory borings, laboratory testing of the collected samples, engineering analysis of the field and laboratory data, and preparation of this report. This report presents the results of our geotechnical engineering investigation for the proposed bridge structure. The approximate location of the site is shown on the Site Map (Plate I-1) in Appendix I of the report.

Due to limitations inherent in geotechnical investigations, it is neither uncommon to encounter unforeseen variations in the subsurface conditions during construction nor is it practical to determine all such variations during an acceptable program of drilling and sampling for a project of this scope. Such variations, when encountered, generally require additional engineering services to attain a properly constructed project. We, therefore, recommend that a contingency fund be provided to accommodate any additional charges resulting from technical services that may be required during construction.

The geotechnical recommendations presented in this report are intended for design input and are not intended to be used as specifications. These recommendations should not be used directly for bidding purposes or for construction cost estimates.

2.0 PROJECT DESCRIPTION

The existing Panoche Road Bridge over Tres Pinos Creek (Br. No. 43C-0027) is a single-lane bridge of 16 foot wide by 87 foot long constructed in 1959. It is planned to replace the existing structure with a new longer and wider bridge on an improved roadway alignment. The site is located approximately 25 miles southeast of the City of Hollister and 15 miles southeast of State Route 25 along Panoche Road. The road runs roughly east west, connecting State Route 25 and Interstate 5.

The total length of the project is approximately 685 feet, which includes approximately 550 feet of roadway work beyond the bridge abutments. Roadway work consists of realigning the roadway downstream (southerly) of the existing bridge to allow construction of the new bridge in one stage while maintaining traffic on the existing alignment during construction. The proposed bridge will be a two-span structure of approximately 132-ft long by 35-ft wide. The new bridge will provide

two 12-ft traffic lanes with adjacent 4-ft paved shoulders on both sides. Downstream of the proposed bridge the creek makes a slight turn towards the roadway requiring an approximately 22-foot long retaining wall at the southwest corner of the new bridge. In addition, a retaining wall on the order of 8 to 14 feet high near the south abutment is planned for a cut into the existing hillside.

There is an unnamed tributary that runs east to west, discharging into Tres Pinos Creek on the east bank adjacent to the existing bridge. The channel currently runs between the southern edge of Panoche Road and the toe of a steep hillside adjacent to the road, past the existing east bridge abutment and into the creek. Because the alignment is shifting to the south, this channel will essentially be covered. A 5-foot diameter pipe culvert and inlet structure will be provided capturing the tributary channel flows where the new roadway alignment starts to shift across into the tributary flowline.

A natural underground spring exists near the northeast corner of the existing bridge, and provides much of the water supply for the ranch. Engineering studies have been performed by the land owner identifying the soil layers and approximate extent of the spring (by Nolan Associates and Haro, Kasunich and Associates, Inc., December 2010). The landowner has a spring box and pump house located approximately 80 feet northwest of Panoche Road. Any construction activity should minimize impacting the functionality of the spring. It was the consensus that constructing the bridge downstream of the existing bridge (as proposed) will reduce the likelihood of impacts to the spring.

3.0 FIELD INVESTIGATION AND TESTING PROGRAM

Two exploratory borings, Borings BH-1 and BH-2, were drilled at the planned location of west abutment and east abutment, respectively. These two deep borings drilled at the abutments were advanced primarily by rotary wash drilling method with the use of diamond core for retrieving rock samples to a maximum depth of 50.5 feet below the existing ground surface.

Another two shallow borings, Boring R-1 located about 60 feet northwest of the proposed Abutment 1 and Boring R-2 located about 200 feet southeast of the proposed Abutment 3, were drilled to about 5 feet below existing grade for pavement design. These two borings were advanced with hollow stem augers, and bulk samples were collected from the cuttings. The approximate locations of the boring are shown on the Log of Test Borings in Appendix II.

All borings were drilled under the technical supervision of our engineer, who classified and logged the soils and rocks encountered during drilling and supervised the collection of samples at various

depths for visual examination and laboratory testing. The soil samples were obtained during drilling by driving 1.4-inch I.D. Standard Penetration Test samplers into the subsurface soils under the impact of a 140 lb hammer falling through 30 inches. Rock cores were obtained by the HQ diamond core barrel (2.4-inch I.D.) and were advanced by hydraulic pressure. After visual examination, the collected samples were sealed and transported to our laboratory for further evaluation and testing.

The blow counts required to drive the sampler for the last 12 inches, Core Recovery and the Rock Quality Designation (RQD) are presented on the bore logs presented in Appendix II. These logs were prepared from the field logs which were edited after visual re-examination of the soil samples in the laboratory and results of classification tests on selected soil samples as indicated on the logs. The abrupt stratum changes shown on these logs may be gradual and relatively minor changes in soil types within a stratum may not be noted on the logs due to field limitations.

4.0 LABORATORY TESTING PROGRAM

Laboratory tests were performed on selected samples in the laboratory to evaluate the physical and engineering properties of the soils and rocks. The tests performed for the study include the following: Laboratory determination of Moisture Content (California Test Method 226), Unit Weight (California Test Method 212), Grain Size Analysis (California Test Method 202), Corrosion Test (California Test Method 643), R-value Test (California Test Method 301) and Unconfined Compressive Strength and Young's Modulus of Rock Core (ASTM D 7012).

5.0 SITE GEOLOGY AND SUBSURFACE CONDITIONS

5.1 Site Geology

General geologic features pertaining to the site were evaluated by reference to the "Geologic Map of the Panoche Pass Quadrangle, San Benito County, California" by Thomas W. Dibblee, Jr., 2007 (DF-325). Based on the publication, the proposed location of the new bridge is underlain by Franciscan Assemblage, which is submetamorphosed from eugeosynclinal marine clastic sedimentary and minor mafic igneous rock. The proposed bridge location is underlain by Glaucophane blueschist (gl) and Graywacke sandstone (fs). Blueschist was observed from the existing slope along Tres Pinos Creek during our site visit. According to the publication, the bedrocks in the study area dip gently to moderately to the north, towards the axis of an east-west trending syncline.

A geologic map of the project vicinity is shown on Plate I-2. The descriptions of the two major geologic units at the project site are presented below:

Glaucophane blueschist (gl) -	schistose but massive, coherent, metamorphosed from ultramafic igneous rocks
Graywacke sandstone (fs) -	gray, massive to bedded, hard, fine grained, contains many dark grains, includes interbeds of gray claystone-siltstone, somewhat shattered and sheared.

Based on the report prepared by Nolan Associates and Haro, Kasunich and Associates, Inc. (December 2010), the cited local geologic map (Dibblee, 1975) shows landslide in the vicinity of the proposed new bridge location. They reviewed multiple sets of stereographic aerial photos of the study area but the aerial photo review did not confirm the existence of the landslide. In addition, such landslide is not shown on the latest geologic map which was referenced for this investigation (Dibblee, 2007). A large landslide was identified about 800 feet west of the project site, but it should not pose impact to the proposed project.

5.2 Subsurface Conditions

Based on the boring data, bedrock was encountered at the shallow depths as expected. A thin layer of sand and gravel, approximately 5 feet thick, was encountered in both borings. Below the surficial materials, the borings encountered Schist (approximately 5 feet thick in Boring BH-1 and 8.5 feet in Boring BH-2) overlying Graywacke to the maximum depth explored. This is consistent with the site geology as described in the previous section and also consistent with the findings per the investigation report prepared by Nolan Associate and Haro, Kasunich and Associates, Inc. (December 2010). The pictures of the core samples are presented in Appendix I of the report.

5.3 Groundwater

For the two deep borings explored for the proposed new bridge, groundwater was not measured due to the rotary wash drilling method used to collect cores from the borings. For the groundwater condition within the project limit, we have reviewed the investigation report prepared by Nolan Associate and Haro, Kasunich and Associates, Inc. (December 2010). The studied area (the private ranch) is a valley filled with alluvium. Four piezometers were installed and groundwater level was monitored for several months. It appears that the spring exists primarily in the alluvium and there appears to be a “barrier” at the southwest end of the property area studied.

At the planned location of the new bridge, groundwater is expected to be relatively deep. However, based upon the site conditions and the previous study, localized perched water may be expected between soil and rock interface and seepage through rock fractures could be expected. In addition, it is anticipated that groundwater or perched water will vary with the

passage of time due to seasonal runoff, groundwater fluctuations, surface and subsurface flow, ground surface run-off, water level in the creek and other factors that were not evident at the time of investigation.

6.0 SCOUR EVALUATION

Per our discussion with the hydraulic engineer, potential scour is estimated about 6 feet at the proposed pier, and about 4 feet of scour at the eastern abutment, with a conservative assumption that all the materials are erodible and no bedrock. Rock slope protection (RSP) consisting of large rock (2-ton class) is proposed at pipe outlet. Light RSP will be used for other area including the abutments. The upstream weir will also receive RSP (1/2-ton class).

Based on the boring data and the preliminary plans provided, the footings are expected to be embedded in the rock formation. Therefore, the impact due to scour is considered low for the proposed new bridge.

7.0 CORROSION EVALUATION

The project site is underlain by Franciscan Assemblage, consisting of Schist and Graywacke. The impact due to corrosion potential is generally low for this type of materials. We have conducted laboratory corrosion test on a selected sample in general accordance with the provisions of California Test Method 643. The corrosion test results are presented in the following table.

TABLE 1 – CORROSION TEST RESULTS

Boring No.	Depth (ft)	pH	Min. Resistivity (ohm-cm)	Sulfate (ppm)	Chloride (ppm)
BH-1	2	7.44	4560	2.4	9.3

Based on the available laboratory test results, the subsoils at the project site are considered non-corrosive per Caltrans guideline, which defines a corrosive environment as an area where the soil has either a chloride concentration of 500 ppm or greater, a sulfate concentration of 2000 ppm or greater, or has a pH of 5.5 or less (Corrosion Guidelines, Caltrans, September 2003). Therefore, corrosion is not considered for foundation design. The test results are presented in Appendix III.

8.0 SEISMIC RECOMMENDATIONS

8.1 Seismic Sources

The project is located in the County of San Benito. Several fault systems are located at about 6 to 8 miles west of the project site. The attached Fault Map (Plate IV-1) presents the locations of the fault systems relative to the project site.

Maximum magnitudes (M_{Max}) of some of the closest faults in the area are based on 2007 Caltrans Deterministic PGA Map and ARS Online Report. These maximum magnitudes represent the largest earthquake a fault is capable of generating and is related to the seismic moment. The earthquake data of the active faults in the project vicinity are summarized below.

TABLE 2 – EARTHQUAKE DATA

Fault	Maximum Magnitude, M_{Max}	Fault Type	Site-to-Fault Distance
Calaveras fault zone (Paicines section) (Fault ID: 324)	7.4	RLSS	6.6± miles
Pine Rock fault (Fault ID: 148)	6.8	RLSS	7.1± miles
San Andreas fault zone (Creeping section) (Fault ID: 311)	7.9	RLSS	8.0± miles

8.2 Seismic Hazards

Potential seismic hazards may arise from three sources: surface fault rupture, ground shaking and liquefaction. Since no active faults pass through the site, the potential for fault rupture is relatively low. As discussed in the previous section, there are several fault systems located about 6 to 8 miles west of the proposed bridge location. The possibility of the site to experience strong ground shaking is considered moderate to high.

Liquefaction is a phenomenon in which saturated cohesionless soils are subject to a temporary but essentially total loss of shear strength under the reversing, cyclic shear stresses associated with earthquake shaking. Submerged cohesionless sands and silts of low relative density are the type of soils, which usually are susceptible to liquefaction. Based on the boring data and the published geologic map, the project site is underlain by Franciscan Assemblage. The liquefaction potential is deemed relatively low and is not considered for foundation design.

8.3 Seismic Design Criteria

The ground motion at the project site was determined based on the new 2007 Caltrans Deterministic PGA Map and the Caltrans ARS Online (Ver. 1.0.4). The development of the design ARS curve is based on several input parameters, including site location (longitude/latitude), average shear wave velocity for the top 30 m/100 feet (VS30m), and other site parameters, such as fault characteristics, site-to-fault distances. The design method incorporates both deterministic and probabilistic seismic hazards to produce the Design Response Spectrum.

The site is underlain by Franciscan Assemblage, consisting of Schist and Graywacke. In order to estimate the average V_{S30m}, we have reviewed the Geotechnical Services Design Manual (Ver. 1.0, August 2009) and the suggested reference (Fumal and Tinsley, 1985).

According to the RQD from Boring BH-1, the Garywacke sandstone is highly fractured with low RQD from about 15-foot depth and below. In our opinion, the rock material may be categorized under Rock Type II of Fumal and Tinsley (1985). We have conservatively assumed a median value of 560 m/sec for practical design purpose. The selected value is listed as the upper limit of Young Sedimentary Rocks in the Caltrans design manual, and it is also consistent with the Type C profile per Caltrans SDC and NEHRP Site Class.

The site location and other relevant parameters are summarized as follows.

- Approx. Site Location: 36.6546ºN/121.0671ºW
- Average V_{S30m} = 560 m/s
- Basin Effect: No
- Near Fault Effect: Yes
- Moment Magnitude (M_{max}) = 7.9 (San Andreas fault zone)
- Anticipated Peak Ground Acceleration (PGA): 0.48g
- The recommended response spectrum is governed by the Caltrans ARS online probabilistic spectra (Appendix IV).

9.0 FOUNDATION RECOMMENDATIONS

9.1 General

This report was prepared specifically for the proposed project as described earlier. Normal procedures were assumed for construction of the bridge structure throughout our analysis and represent one of the bases of recommendations presented herein. Our design criteria have been based upon the materials encountered at the site. Therefore, we should be notified in the event that these conditions are changed, so as to modify or amend our recommendations. In addition, bridge plans should be reviewed by our office prior to finalizing the plans to see that the intent of our recommendations is included in the plans.

9.2 Foundation

For the proposed new bridge, it is planned to use spread footings for foundation support. Based on the preliminary plans provided, the footings are anticipated to be at Elev. 1787 feet and Elev. 1779 feet for Abutment 1 and Bent 2, respectively. For Abutment 3, a step footing is proposed because the new alignment will cut into the existing slope. The planned footing

elevations at Abutment 3 are at Elev. 1788 and 1792 feet. Based on boring data and readily available geologic information, the footings are expected to be supported on bedrock (Franciscan Assemblage).

The foundation design is based on Caltrans Load Resistance Factor Design (LRFD) criteria (Memo To Designers 4-1, April 2008). This is in compliance with AASHTO LRFD Specifications, 4th edition, with California Amendments. The permissible contact stress (LRFD Service) and factored gross nominal bearing resistance (LRFD Strength and Extreme Event) were evaluated from "settlement" and "bearing capacity" perspectives, respectively. A friction coefficient of 0.45 may be used to estimate the friction resistance. For sliding, the resistance factor is 0.8 for strength limit state in LRFD design per AASHTO LRFD specifications (Section 10.5.5.2).

For estimating the bearing capacity, we have conservatively modeled the bedrock as very dense sand with high blow counts and friction angle. The settlement due to the footing surcharge is expected to be minimal, which should be less than 1/4 inch under the recommended bearing pressure. The Spread Footing Data Tables per Caltrans Memo To Designers 4-1 are presented below.

TABLE 3 – Foundation Design Recommendations

Support Location	Footing Size (ft)		Bottom of Footing Elevation (ft)	Minimum Footing Embedment Depth (ft)	WSD (LRFD Service-I Limit State Load Combination)		LRFD		
							Service	Strength $\varphi_b = 0.45$	Extreme Event $\varphi_b = 1.00$
	B	L			Permissible Gross Contact Stress (ksf)	Allowable Gross Bearing Capacity (ksf)	Permissible Net Contact Stress (ksf)	Factored Gross Nominal Bearing Resistance (ksf)	Factored Gross Nominal Bearing Resistance (ksf)
Abut 1	9.0	50.4	1787	5	10	10	N/A	N/A	N/A
Bent 2	11.0	45.0	1779	6	N/A	N/A	10	13.5	30
Abut 3	9.0	50.0	1788 1792	5	10	10	N/A	N/A	N/A

We recommend that a representative from our office observe the foundation subgrade exposed in all footing excavations prior to placing reinforcing steel or concrete. If groundwater is encountered during footing excavations, Caltrans standard specification (section 19–3.04) for "Water Control and Foundation Treatment" should apply. It is expected that monitoring of the

nearby spring box groundwater levels will be coordinated with footing excavations and done by property owner's personnel.

9.3 Lateral Earth Pressures

Abutment retaining walls should be designed to resist the following Applied Lateral Earth Pressures and live load. These values assume no hydrostatic pore pressure buildup behind the wall and are based on well-drained backfill behind the walls supported in native soil.

Applied Lateral Earth Pressure	
Active Condition	36 pcf Equivalent Fluid Pressure (EFP) for the engineered backfill.
At-Rest Condition	55 pcf Equivalent Fluid Pressure (EFP) for the engineered backfill.
Passive Resistance	5 ksf (ultimate) for seismic design of the abutment backwall (5.5 feet high or greater); for activated height less than 5.5 feet modify proportionally, i.e. 5×(H/5.5) ksf. A minimum lateral wall movement of 2% of wall height to mobilize the full ultimate passive pressure is required.

Cantilever walls which are free to rotate at least 0.004 radian may be assumed flexible for the active condition. Walls that are not capable of this movement should be assumed rigid and designed for the at-rest condition. The effect of any surcharge (dead, live, or traffic load) should be added to the preceding lateral earth pressures. A coefficient of 0.3 and 0.5 may be used to determine the additional earth pressure resulting from the surcharge for active and at-rest conditions, respectively.

10.0 RETAINING WALL FOR CUT NEAR SOUTH ABUTMENT

Per our discussion with the designer, the roadway will be realigned downstream (southerly) of the existing bridge. Minor cut into the hillside is planned to accommodate the future alignment. According to our field observation, there appears to be a thin soil mantle overlying the rock formation. The existing hillside is sloping at approximately 1.3H to 1.5H:1V based on the typical sections provided.

Based on discussion with the designer and consideration of environmental and various constraints, a retaining wall is planned for the cut at the hillside near the south abutment in order to avoid "chasing up the hillside". The planned wall height is on the order of 8 to 14 feet for a total length about 112 feet (approx. Sta. 13+12 to 14+14). The wall face will be offset from the centerline of the new roadway about 22.4 feet. The footing elevation is anticipated to vary from Elev. 1793.3 to

1803.3 feet. For wall construction purpose, a temporary cut slope ratio of 1H:1V may be assumed. For design of the wall, it is recommended that the active pressure be developed for 1.5H:1V. The footing subgrade may consist of shallow granular soils over weathered rock.

For preliminary information of lateral design, the recommended active earth pressure for design is 80 pcf (for 1.5H:1V backfill slope). For design following AASHTO LRFD specs, the recommended ultimate passive resistance is 760 pcf, and the recommended friction coefficient at footing bottom is 0.56. Per AASHTO LRFD specs with California Amendments, the Resistance Factors are 0.50 and 0.80 for passive and sliding for strength limit state (Table 10.5.5.2.2-1), respectively. For extreme limit state and strength limit state, the factored nominal bearing capacities are 21 ksf and 9.5 ksf (Resistance Factor = 0.45), respectively. For service case, an allowable bearing capacity of 7000 psf may be used for wall design. The wall backfill should consist of Caltrans standard Structure Backfill, and proper drainage should be provided.

It is recommended that the geotechnical engineer observe the footing excavation and footing subgrade preparation during construction and provide further evaluation, if necessary. Planting or other slope protection measures should be considered to minimize surface erosion of the backfill slope. Lined drainage ditches may be installed at the toe of the wall.

11.0 PAVEMENT SECTIONS

For the proposed roadway, it is our understanding that the designer will design the pavement sections based on the recommended R-value. As part of our investigation, two bulk samples were collected from the anticipated subgrade level for the R-value test. Boring R-1 is located about 60 feet northwest of the planned location of Abutment 1, and Boring R-2 is located about 200 feet southeast of the planned location of Abutment 3 along the approach road.

R-value tests were performed on both samples to determine design values for the pavement sections. Based on the laboratory tests, the R-values are 57 and 27 for Borings R-1 and R-2, respectively. Generally, a lower R-value is used for a pavement design. Based on the test results and the subgrade condition, an R-value of 25 is recommended for the pavement design. It is also recommended that the imported materials which will be placed within 3 feet from the top of proposed pavement subgrade have a minimum R-value of 25.

12.0 GRADING

Grading is anticipated for construction of roadway for the proposed project. It is recommended to remove surficial loose localized fill and replace it with compacted, engineered fill. All grading work associated with the construction of the roadway should be performed in accordance with

these grading recommendations and the project specifications. A representative from our office or regulatory agency should observe all excavated areas during grading and perform moisture and density tests on prepared subgrade and compacted fill material. Any fill material imported to the site should be non-expansive relatively granular material and should be reviewed by the Geotechnical Engineer.

Should there be any alterations of the proposed construction that will affect the stated bases of our recommendations, we should be informed so that we can review such changes and amend or submit additional recommendations.

Engineered Fill. Engineered fill should be non-expansive and consist of relatively granular material having a P.I. of less than 15. In addition, we recommend that the material within 3 feet of the top of proposed pavement subgrade have a minimum R-value of 25. The fill shall also be free of organic and inorganic debris, rubbles and any other deleterious material. The on-site soils may be used as engineered fill, provided they meet the above criteria.

Compaction of Fill and Subgrades. Compaction of fill and subgrades should be in accordance with ASTM D1557-91 and the recommended percent of compaction is discussed below:

- 90% for backfilling after removing buried utilities and structures, depressions caused due to other construction activities such as removal of old, loose fill, etc.
- 95% for upper 6 inches of pavement subgrade
- 90% for general roadway fill.

13.0 CONSTRUCTION CONSIDERATIONS

13.1 General

To a degree, the performance of any structure is dependent upon construction procedures and quality. Hence, observation of grading operations should be carried out by regulatory agency. If the encountered subsurface conditions differ from those forming the basis of our recommendations, this office should be informed in order to assess the need for design changes. Therefore, the recommendations presented in this report are contingent upon good quality control and these geotechnical observations during construction.

13.2 Foundation Excavation

Based on the available boring data, the bedrock consists of slightly to moderately fractured Schist overlying Graywacke sandstone. We have used the unconfined compressive strength test results to correlate compressional wave velocity (Vp) per Sharma & Singh (2007). The compressional wave velocities are typically used for determining the rippability of the rocks,

which provide a good indication of the degree of effort of rock excavation. The unconfined compressive strengths and the correlated Vp velocities are summarized in the following table:

TABLE 4 – Correlated Vp

Boring No.	Depth (ft)	Elev. (ft)	UCS (psi)	Correlated Vp (ft/s)
BH-1	13	1785	4304	7546
BH-1	17	1781	8988	9197
BH-2	11	1789	1173	6443
BH-2	19	1789	3358	7213

According to the correlated compressional wave velocity and the boring data, difficult and hard excavation for foundation construction is expected although the project does not have mass excavation into the rock. However, as requested by the owner of the nearby property, it is preferred that low impact equipment be used for construction in order to minimize potential impacts to the owner's natural spring located near the northeast corner of the bridge. Therefore, it is prudent to make the contractor aware of the requirement and the rock condition. The contractors should evaluate the site condition, review the test data, and be satisfied as to the selection of equipment and construction method best suited to the anticipated conditions.

Please note that the information described above is only a general guideline. The effort of rock excavation depends not only on p-wave velocity, but also on the degree of fracturing of the rock and the skill and experience of the contractor.

13.3 Differing Site Conditions

The soil and rock conditions described in this report are based on available boring data. It should be noted that our borings revealed subsurface conditions only at the locations drilled. Because of the variability from place to place within soils in general, and the nature of geologic processes that formed the bedrock, subsurface conditions could differ between the explored locations.

Early communication should be made between the Resident Engineer, the Contractor, and the Geotechnical Engineer as soon as conditions that differ from those described in this report are recognized by any of the parties. Additional recommendations could be provided if such conditions arise.

14.0 INVESTIGATION LIMITATIONS

Our services consist of professional opinions and recommendations made in accordance with generally accepted geotechnical engineering principles and practices and are based on our site

reconnaissance and the assumption that the subsurface conditions do not deviate from observed conditions. All work done is in accordance with generally accepted geotechnical engineering principles and practices. No warranty, expressed or implied, of merchantability or fitness, is made or intended in connection with our work or by the furnishing of oral or written reports or findings. The scope of our services did not include any environmental assessment or investigation for the presence or absence of hazardous or toxic materials in structures, soil, surface water, groundwater or air, below or around this site. Unanticipated soil conditions are commonly encountered and cannot be fully determined by taking soil samples and excavating test borings; different soil conditions may require that additional expenditures be made during construction to attain a properly constructed project. Some contingency fund is thus recommended to accommodate these possible extra costs.

This report has been prepared for the proposed project as described earlier, to assist the engineer in the design of this project. In the event any changes in the design or location of the facilities are planned, or if any variations or undesirable conditions are encountered during construction, our conclusions and recommendations shall not be considered valid unless the changes or variations are reviewed and our recommendations modified or approved by us in writing.

This report is issued with the understanding that it is the designer's responsibility to ensure that the information and recommendations contained herein are incorporated into the project and that necessary steps are also taken to see that the recommendations are carried out in the field.

The findings in this report are valid as of the present date. However, changes in the subsurface conditions can occur with the passage of time, whether they are due to natural processes or to the works of man, on this or adjacent properties. In addition, changes in applicable or appropriate standards occur, whether they result from legislation or from the broadening of knowledge. Accordingly, the findings in this report might be invalidated, wholly or partially, by changes outside of our control.

Respectfully submitted,
PARIKH CONSULTANTS, INC.

DRAFT

Frank Y. Wang, P.E., G.E. 2862
Project Engineer

Gary Parikh, P.E., G.E. 666
Project Manager

{S:\ONGOING\DWANG\Foundation Report - Panoche Road Bridge (20120130).docx}

APPENDIX I

PARIKH CONSULTANTS, INC.
GEOTECHNICAL CONSULTANTS
MATERIALS TESTING

PANOCHE ROAD BRIDGE
SAN BENITO COUNTY, CALIFORNIA

JOB NO.: 2011-107-FDN	PLATE NO.: I-1

BORING LOCATION MAP

PARIKH CONSULTANTS, INC.
GEOTECHNICAL CONSULTANTS
MATERIALS TESTING

PANOCHE ROAD BRIDGE
SAN BENITO COUNTY, CALIFORNIA

JOB NO.: 2011-107-FDN	PLATE: I-2

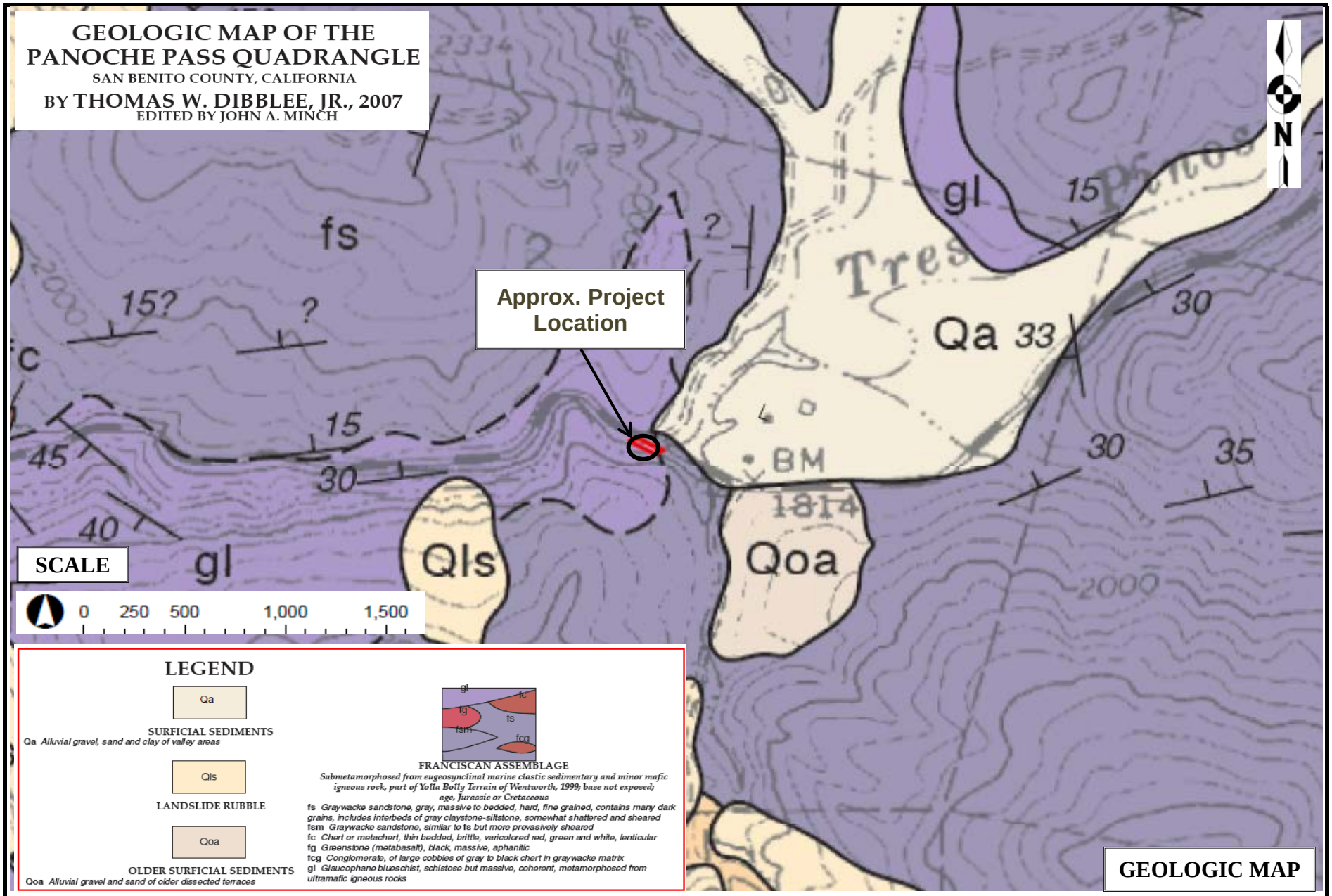

PARIKH CONSULTANTS, INC.
GEOTECHNICAL CONSULTANTS
MATERIALS TESTING

PANOCHE ROAD BRIDGE
SAN BENITO COUNTY, CALIFORNIA

JOB NO.: 2011-107-FDN	PLATE NO.: I-3

BORING - BH-1

PARIKH CONSULTANTS, INC.
GEOTECHNICAL CONSULTANTS
MATERIALS TESTING

PANOCHE ROAD BRIDGE
SAN BENITO COUNTY, CALIFORNIA

JOB NO.: 2011-107-FDN	**PLATE NO.: I-4A**

BORING - BH-1

PARIKH CONSULTANTS, INC.
GEOTECHNICAL CONSULTANTS
MATERIALS TESTING

PANOCHE ROAD BRIDGE
SAN BENITO COUNTY, CALIFORNIA

JOB NO.: 2011-107-FDN

PLATE NO.: I-4B

BORING - BH-2

PARIKH CONSULTANTS, INC.
GEOTECHNICAL CONSULTANTS
MATERIALS TESTING

PANOCHE ROAD BRIDGE
SAN BENITO COUNTY, CALIFORNIA

JOB NO.: 2011-107-FDN	**PLATE NO.: I-4C**

BORING - BH-2

PARIKH CONSULTANTS, INC.
GEOTECHNICAL CONSULTANTS
MATERIALS TESTING

PANOCHE ROAD BRIDGE
SAN BENITO COUNTY, CALIFORNIA

JOB NO.: 2011-107-FDN

PLATE NO.: I-4D

BORING - BH-2

PARIKH CONSULTANTS, INC.
GEOTECHNICAL CONSULTANTS
MATERIALS TESTING

PANOCHE ROAD BRIDGE
SAN BENITO COUNTY, CALIFORNIA

JOB NO.: 2011-107-FDN

PLATE NO.: I-4E

APPENDIX II

DIST	COUNTY	ROUTE	POST MILES TOTAL PROJECT	SHEET No	TOTAL SHEETS

GEOTECHNICAL PROFESSIONAL DATE

PLANS APPROVAL DATE

REGISTERED PROFESSIONAL ENGINEER GARY PARIKH No. G.E. 666 Exp. 12/31/13 GEOTECHNICAL STATE OF CALIFORNIA

The County of San Benito or its officers or agents shall not be responsible for the accuracy or completeness of electronic copies of this plan sheet.

QUINCY ENGINEERING
3247 RAMOS CIRCLE
SACRAMENTO, CA 95827

PARIKH CONSULTANTS, INC.
2360 QUME DRIVE, SUITE A
SAN JOSE, CA 95131

DRAFT

CEMENTATION

Description	Criteria
Weak	Crumbles or breaks with handling or little finger pressure.
Moderate	Crumbles or breaks with considerable finger pressure.
Strong	Will not crumble or break with finger pressure.

BOREHOLE IDENTIFICATION

Symbol	Hole Type	Description
Size	A	Auger Boring (hollow or solid stem bucket)
Size	R RW RC P	Rotary drilled boring (conventional) Rotary drilled with self-casing wire-line Rotary core with continuously-sampled, self-casing wire-line Rotary percussion boring (air)
Size	R	Rotary drilled diamond core
Size	HD HA	Hand driven (1-inch soil tube) Hand Auger
●	D	Dynamic Cone Penetration Boring
▲	CPT	Cone Penetration Test (ASTM D 5778)
□	O	Other (note on LOTB)

Note: Size in inches.

CONSISTENCY OF COHESIVE SOILS

Description	Shear Strength (tsf)	Pocket Penetrometer Measurement, PP, (tsf)	Torvane Measurement, TV, (tsf)	Vane Shear Measurement, VS, (tsf)
Very Soft	Less than 0.12	Less than 0.25	Less than 0.12	Less than 0.12
Soft	0.12 – 0.25	0.25 – 0.5	0.12 – 0.25	0.12 – 0.25
Medium Stiff	0.25 – 0.5	0.5 – 1	0.25 – 0.5	0.25 – 0.5
Stiff	0.5 – 1	1 – 2	0.5 – 1	0.5 – 1
Very Stiff	1 – 2	2 – 4	1 – 2	1 – 2
Hard	Greater than 2	Greater than 4	Greater than 2	Greater than 2

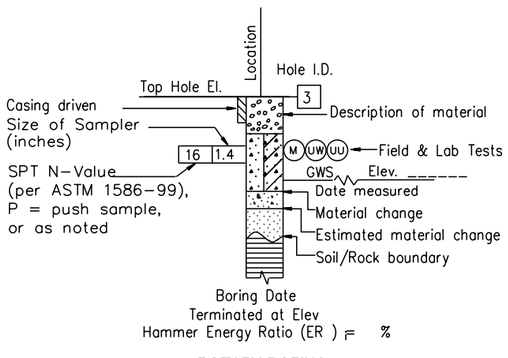

ROTARY BORING

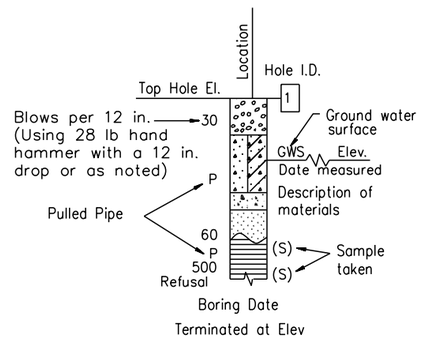

HAND BORING

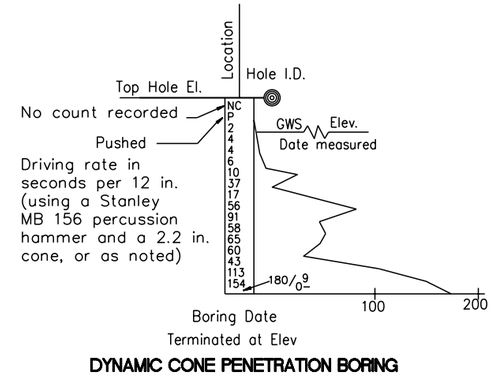

DYNAMIC CONE PENETRATION BORING

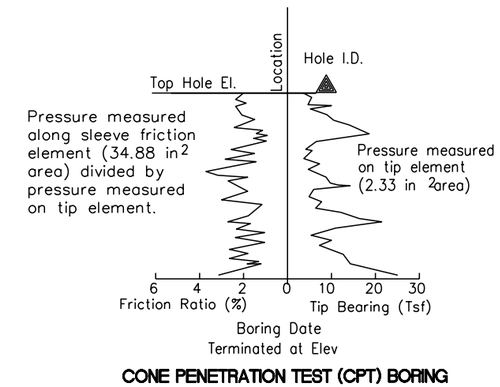

CONE PENETRATION TEST (CPT) BORING

DESIGN OVERSIGHT	DRAWN BY	A. BAKANE	A. BAKANE FIELD INVESTIGATION BY:	PREPARED FOR THE COUNTY OF SAN BENITO DEPARTMENT OF PUBLIC WORKS	DAVID WANG PROJECT ENGINEER	BRIDGE NO. 43C027
SIGN OFF DATE	CHECKED BY	DAVID WANG	DATE: SEPTEMBER 2011			POST MILES

PANOCHE ROAD BRIDGE

LOG OF TEST BORINGS 1 OF 4

GS GEOTECHNICAL LOG OF TEST BORINGS SHEET (ENGLISH) (REV. 7/16/10)

ORIGINAL SCALE IN INCHES FOR REDUCED PLANS 0 1 2 3

UNIT: X
PROJECT NUMBER & PHASE: X

DISREGARD PRINTS BEARING EARLIER REVISION DATES 12/21/2011

REVISION DATES SHEET OF

FILE => $REQUEST

CONTRACT NO.: X PROJECT ID: X

USERNAME => $USER DATE PLOTTED => $DATE TIME PLOTTED => $TIME

DIST	COUNTY	ROUTE	POST MILES TOTAL PROJECT	SHEET No	TOTAL SHEETS

GEOTECHNICAL PROFESSIONAL DATE

PLANS APPROVAL DATE

The County of San Benito or its officers or agents shall not be responsible for the accuracy or completeness of electronic copies of this plan sheet.

REGISTERED PROFESSIONAL ENGINEER GARY PARIKH No. G.E. 666 Exp. 12/31/13 GEOTECHNICAL STATE OF CALIFORNIA

QUINCY ENGINEERING
3247 RAMOS CIRCLE
SACRAMENTO, CA 95827

PARIKH CONSULTANTS, INC.
2360 QUME DRIVE, SUITE A
SAN JOSE, CA 95131

DRAFT

GROUP SYMBOLS AND NAMES

Graphic/Symbol	Group Names	Graphic/Symbol	Group Names
GW	Well-graded GRAVEL Well-graded GRAVEL with SAND	CL	Lean CLAY Lean CLAY with SAND Lean CLAY with GRAVEL SANDY lean CLAY SANDY lean CLAY with GRAVEL GRAVELLY lean CLAY GRAVELLY lean CLAY with SAND
GP	Poorly-graded GRAVEL Poorly-graded GRAVEL with SAND		
GW-GM	Well-graded GRAVEL with SILT Well-graded GRAVEL with SILT and SAND	CL-ML	SILTY CLAY SILTY CLAY with SAND SILTY CLAY with GRAVEL SANDY SILTY CLAY SANDY SILTY CLAY with GRAVEL GRAVELLY SILTY CLAY GRAVELLY SILTY CLAY with SAND
GW-GC	Well-graded GRAVEL with CLAY (or SILTY CLAY) Well-graded GRAVEL with CLAY and SAND (or SILTY CLAY and SAND)		
GP-GM	Poorly-graded GRAVEL with SILT Poorly-graded GRAVEL with SILT and SAND	ML	SILT SILT with SAND SILT with GRAVEL SANDY SILT SANDY SILT with GRAVEL GRAVELLY SILT GRAVELLY SILT with SAND
GP-GC	Poorly-graded GRAVEL with CLAY (or SILTY CLAY) Poorly-graded GRAVEL with CLAY and SAND (or SILTY CLAY and SAND)		
GM	SILTY GRAVEL SILTY GRAVEL with SAND	OL	ORGANIC lean CLAY ORGANIC lean CLAY with SAND ORGANIC lean CLAY with GRAVEL SANDY ORGANIC lean CLAY SANDY ORGANIC lean CLAY with GRAVEL GRAVELLY ORGANIC lean CLAY GRAVELLY ORGANIC lean CLAY with SAND
GC	CLAYEY GRAVEL CLAYEY GRAVEL with SAND		
GC-GM	SILTY, CLAYEY GRAVEL SILTY, CLAYEY GRAVEL with SAND	OL	ORGANIC SILT ORGANIC SILT with SAND ORGANIC SILT with GRAVEL SANDY ORGANIC SILT SANDY ORGANIC SILT with GRAVEL GRAVELLY ORGANIC SILT GRAVELLY ORGANIC SILT with SAND
SW	Well-graded SAND Well-graded SAND with GRAVEL		
SP	Poorly-graded SAND Poorly-graded SAND with GRAVEL	CH	Fat CLAY Fat CLAY with SAND Fat CLAY with GRAVEL SANDY fat CLAY SANDY fat CLAY with GRAVEL GRAVELLY fat CLAY GRAVELLY fat CLAY with SAND
SW-SM	Well-graded SAND with SILT Well-graded SAND with SILT and GRAVEL		
SW-SC	Well-graded SAND with CLAY (or SILTY CLAY) Well-graded SAND with CLAY and GRAVEL (or SILTY CLAY and GRAVEL)	MH	Elastic SILT Elastic SILT with SAND Elastic SILT with GRAVEL SANDY elastic SILT SANDY elastic SILT with GRAVEL GRAVELLY elastic SILT GRAVELLY elastic SILT with SAND
SP-SM	Poorly-graded SAND with SILT Poorly-graded SAND with SILT and GRAVEL		
SP-SC	Poorly-graded SAND with CLAY (or SILTY CLAY) Poorly-graded SAND with CLAY and GRAVEL (or SILTY CLAY and GRAVEL)	OH	ORGANIC fat CLAY ORGANIC fat CLAY with SAND ORGANIC fat CLAY with GRAVEL SANDY ORGANIC fat CLAY SANDY ORGANIC fat CLAY with GRAVEL GRAVELLY ORGANIC fat CLAY GRAVELLY ORGANIC fat CLAY with SAND
SM	SILTY SAND SILTY SAND with GRAVEL		
SC	CLAYEY SAND CLAYEY SAND with GRAVEL	OH	ORGANIC elastic SILT ORGANIC elastic SILT with SAND ORGANIC elastic SILT with GRAVEL SANDY ORGANIC elastic SILT SANDY ORGANIC elastic SILT with GRAVEL GRAVELLY ORGANIC elastic SILT GRAVELLY ORGANIC elastic SILT with SAND
SC-SM	SILTY, CLAYEY SAND SILTY, CLAYEY SAND with GRAVEL		
PT	PEAT	OL/OH	ORGANIC SOIL ORGANIC SOIL with SAND ORGANIC SOIL with GRAVEL SANDY ORGANIC SOIL SANDY ORGANIC SOIL with GRAVEL GRAVELLY ORGANIC SOIL GRAVELLY ORGANIC SOIL with SAND
	COBBLES COBBLES and BOULDERS BOULDERS		

FIELD AND LABORATORY TESTING

- (C) Consolidation (ASTM D 2435)
- (CL) Collapse Potential (ASTM D 5333)
- (CP) Compaction Curve (CTM 216)
- (CR) Corrosivity Testing (CTM 643, CTM 422, CTM 417)
- (CU) Consolidated Undrained Triaxial (ASTM D 4767)
- (DS) Direct Shear (ASTM D 3080)
- (EI) Expansion Index (ASTM D 4829)
- (M) Moisture Content (ASTM D 2216)
- (OC) Organic Content-% (ASTM D 2974)
- (P) Permeability (CTM 220)
- (PA) Particle Size Analysis (ASTM D 422)
- (PI) Plasticity Index (AASHTO T 90) Liquid Limit (AASHTO T 89)
- (PL) Point Load Index (ASTM D 5731)
- (PM) Pressure Meter
- (R) R-Value (CTM 301)
- (SE) Sand Equivalent (CTM 217)
- (SG) Specific Gravity (AASHTO T 100)
- (SL) Shrinkage Limit (ASTM D 427)
- (SW) Swell Potential (ASTM D 4546)
- (UC) Unconfined Compression-Soil (ASTM D 2166) Unconfined Compression-Rock (ASTM D 2938)
- (UU) Unconsolidated Undrained Triaxial (ASTM D 2850)
- (UW) Unit Weight (ASTM D 4767)

APPARENT DENSITY OF COHESIONLESS SOILS

Description	SPT N (Blows / 12 inches)
Very Loose	0 – 5
Loose	5 – 10
Medium Dense	10 – 30
Dense	30 – 50
Very Dense	Greater than 50

MOISTURE

Description	Criteria
Dry	No discernable moisture
Moist	Moisture present, but no free water
Wet	Visible free water

PERCENT OR PROPORTION OF SOILS

Description	Criteria
Trace	Particles are present but estimated to be less than 5%
Few	5% – 10%
Little	15% – 25%
Some	30% – 45%
Mostly	50% – 100%

PARTICLE SIZE

Description		Size (in.)
Boulder		Greater than 12
Cobble		3 – 12
Gravel	Coarse	3/4 – 3
	Fine	1/5 – 3/4
Sand	Coarse	1/16 – 1/5
	Medium	1/64 – 1/16
	Fine	1/300 – 1/64
Silt and Clay		Less than 1/300

DESIGN OVERSIGHT

SIGN OFF DATE

DRAWN BY A. BAKANE

CHECKED BY DAVID WANG

A. BAKANE
FIELD INVESTIGATION BY:
DATE: SEPTEMBER 2011

PREPARED FOR THE COUNTY OF SAN BENITO DEPARTMENT OF PUBLIC WORKS

DAVID WANG
PROJECT ENGINEER

BRIDGE NO. 43C027
POST MILES

PANOCHE ROAD BRIDGE
LOG OF TEST BORINGS 2 OF 4

GS GEOTECHNICAL LOG OF TEST BORINGS SHEET (ENGLISH) (REV. 7/16/10)

ORIGINAL SCALE IN INCHES FOR REDUCED PLANS 0 1 2 3

UNIT: X
PROJECT NUMBER & PHASE: X

DISREGARD PRINTS BEARING EARLIER REVISION DATES 12/21/2011

REVISION DATES SHEET OF

FILE => $REQUEST

CONTRACT NO.: X PROJECT ID: X

USERNAME => $USER DATE PLOTTED => $DATE TIME PLOTTED => $TIME

DIST	COUNTY	ROUTE	POST MILES TOTAL PROJECT	SHEET No	TOTAL SHEETS

GEOTECHNICAL PROFESSIONAL DATE

PLANS APPROVAL DATE

PROFESSIONAL ENGINEER REGISTERED GARY PARIKH No. G.E. 666 Exp. 12/31/13 GEOTECHNICAL STATE OF CALIFORNIA

The County of San Benito or its officers or agents shall not be responsible for the accuracy or completeness of electronic copies of this plan sheet.

QUINCY ENGINEERING
3247 RAMOS CIRCLE
SACRAMENTO, CA 95827

PARIKH CONSULTANTS, INC.
2360 QUME DRIVE, SUITE A
SAN JOSE, CA 95131

DRAFT

REFERENCE: CALTRANS SOIL & ROCK LOGGING, CLASSIFICATION, AND PRESENTATION MANUAL (2010)

PERCENT CORE RECOVERY (REC) + ROCK QUALITY DESIGNATION (RQD)

$$REC = \frac{\sum \text{Length of the recovered core pieces (in.)}}{\text{Total length of core run (in.)}} \times 100\%$$

$$RQD = \frac{\sum \text{Length of intact core pieces} \geq 4 \text{ in.}}{\text{Total length of core run (in.)}} \times 100\%$$

RQD* Indicates soundness criteria not met.

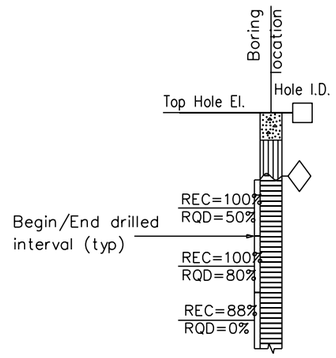

BEDDING SPACING

Description	Thickness / Spacing
Massive	Greater than 10 ft
Very Thickly Bedded	3 ft – 10 ft
Thickly Bedded	1 ft – 3 ft
Moderately Bedded	4 in. – 1 ft
Thinly Bedded	1 in. – 4 in.
Very Thinly Bedded	1/4 in. – 1 in.
Laminated	Less than 1/4 in.

LEGEND OF ROCK MATERIALS

- IGNEOUS ROCK
- SEDIMENTARY ROCK
- METAMORPHIC ROCK

ROCK HARDNESS

Description	Criteria
Extremely Hard	Cannot be scratched with a pocketknife or sharp pick. Can only be chipped with repeated heavy hammer blows.
Very Hard	Cannot be scratched with a pocketknife or sharp pick. Breaks with repeated heavy hammer blows.
Hard	Can be scratched with a pocketknife or sharp pick with difficulty (heavy pressure). Breaks with heavy hammer blows.
Moderately Hard	Can be scratched with pocketknife or sharp pick with light or moderate pressure. Breaks with moderate hammer blows.
Moderately Soft	Can be grooved 1/16 in. deep with a pocketknife or sharp pick with moderate or heavy pressure. Breaks with light hammer blow or heavy manual pressure.
Soft	Can be grooved or gouged easily by a pocketknife or sharp pick with light pressure, can be scratched with fingernail. Breaks with light to moderate manual pressure.
Very Soft	Can be readily indented, grooved or gouged with fingernail, or carved with a pocketknife. Breaks with light manual pressure.

FRACTURE DENSITY

Description	Observed Fracture Density
Unfractured	No fractures.
Very Slightly Fractured	Core lengths greater than 3 ft.
Slightly Fractured	Core lengths mostly from 1 to 3 ft.
Moderately Fractured	Core lengths mostly from 4 in. to 1 ft.
Intensely Fractured	Core lengths mostly from 1 to 4 in.
Very Intensely Fractured	Mostly chips and fragments.

WEATHERING DESCRIPTORS FOR INTACT ROCK

Description	Diagnostic Features					General Characteristics
	Chemical Weathering–Discoloration and/or Oxidation		Mechanical Weathering–Grain Boundary Conditions (Disaggregation) Primarily for Granitics and Some Coarse–Grained Sediments	Texture and Leaching		
	Body of Rock	Fracture Surfaces		Texture	Leaching	
Fresh	No discoloration, not oxidized.	No discoloration or oxidation.	No separation, intact (tight).	No change	No leaching	Hammer rings when crystalline rocks are struck.
Slightly Weathered	Discoloration or oxidation is limited to surface of, or short distance from, fractures; some feldspar crystals are dull.	Minor to complete discoloration or oxidation of most surfaces.	No visible separation, intact (tight).	Preserved	Minor leaching of some soluble minerals.	Hammer rings when crystalline rocks are struck. Body of rock not weakened.
Moderately Weathered	Discoloration or oxidation extends from fractures usually throughout; Fe–Mg minerals are "rusty," feldspar crystals are "cloudy."	All fracture surfaces are discolored or oxidized.	Partial separation of boundaries visible.	Generally preserved	Soluble minerals may be mostly leached.	Hammer does not ring when rock is struck. Body of rock is slightly weakened.
Intensely Weathered	Discoloration or oxidation throughout; all feldspars and Fe–Mg minerals are altered to clay to some extent; or chemical alteration produces in–situ disaggregation, see grain boundary conditions.	All fracture surfaces are discolored or oxidized, surfaces friable.	Partial separation, rock is friable; in semiarid conditions granitics are disaggregated.	Texture altered by chemical disintegration (hydration, argillation).	Leaching of soluble minerals may be complete.	Dull sound when struck with hammer, usually can be broken with moderate to heavy manual pressure or by light hammer blow without reference to planes of weakness such as incipient or hairline fractures, or veinlets. Rock is significantly weakened.
Decomposed	Discolored or oxidized throughout, but resistant minerals such as quartz may be unaltered; all feldspars and Fe–Mg minerals are completely altered to clay.		Complete separation of grain boundaries (disaggregated).	Resembles a soil, partial or complete remnant rock structure may be preserved; leaching of soluble minerals usually complete.		Can be granulated by hand. Resistant minerals such as quartz may be present as "stringers" or "dikes."

DESIGN OVERSIGHT

SIGN OFF DATE

DRAWN BY A. BAKANE

CHECKED BY DAVID WANG

A. BAKANE
FIELD INVESTIGATION BY:
DATE: SEPTEMBER 2011

PREPARED FOR THE
COUNTY OF SAN BENITO
DEPARTMENT OF PUBLIC WORKS

DAVID WANG
PROJECT ENGINEER

BRIDGE NO. 43C027
POST MILES

PANOCHE ROAD BRIDGE
LOG OF TEST BORINGS 3 OF 4

GS GEOTECHNICAL LOG OF TEST BORINGS SHEET (ENGLISH) (REV. 7/16/10)

ORIGINAL SCALE IN INCHES FOR REDUCED PLANS 0 1 2 3

UNIT: X
PROJECT NUMBER & PHASE: X

DISREGARD PRINTS BEARING EARLIER REVISION DATES 12/21/2011

REVISION DATES SHEET OF

FILE => $REQUEST

CONTRACT NO.: X PROJECT ID: X

USERNAME => $USER DATE PLOTTED => $DATE TIME PLOTTED => $TIME

DIST	COUNTY	ROUTE	POST MILES TOTAL PROJECT	SHEET No	TOTAL SHEETS

GEOTECHNICAL PROFESSIONAL DATE

PLANS APPROVAL DATE

REGISTERED PROFESSIONAL ENGINEER GARY PARIKH No. G.E. 666 Exp. 12/31/13 GEOTECHNICAL STATE OF CALIFORNIA

The County of San Benito or its officers or agents shall not be responsible for the accuracy or completeness of electronic copies of this plan sheet.

QUINCY ENGINEERING
3247 RAMOS CIRCLE
SACRAMENTO, CA 95827

PARIKH CONSULTANTS, INC.
2360 QUME DRIVE, SUITE A
SAN JOSE, CA 95131

DRAFT

Notes:
Standard Penetration Test Sampler: I.D. = 1.4"; O.D. = 2"
Modified California Sampler: I.D. = 2.5"; O.D. = 3"
Hammer Assembly: A 140 lb hammer with a 30" drop (Automatic Hammer)

This LOTB sheet was prepared in accordance with the Caltrans Soil & Rock, Logging, Classification, and Presentation Manual (2010)

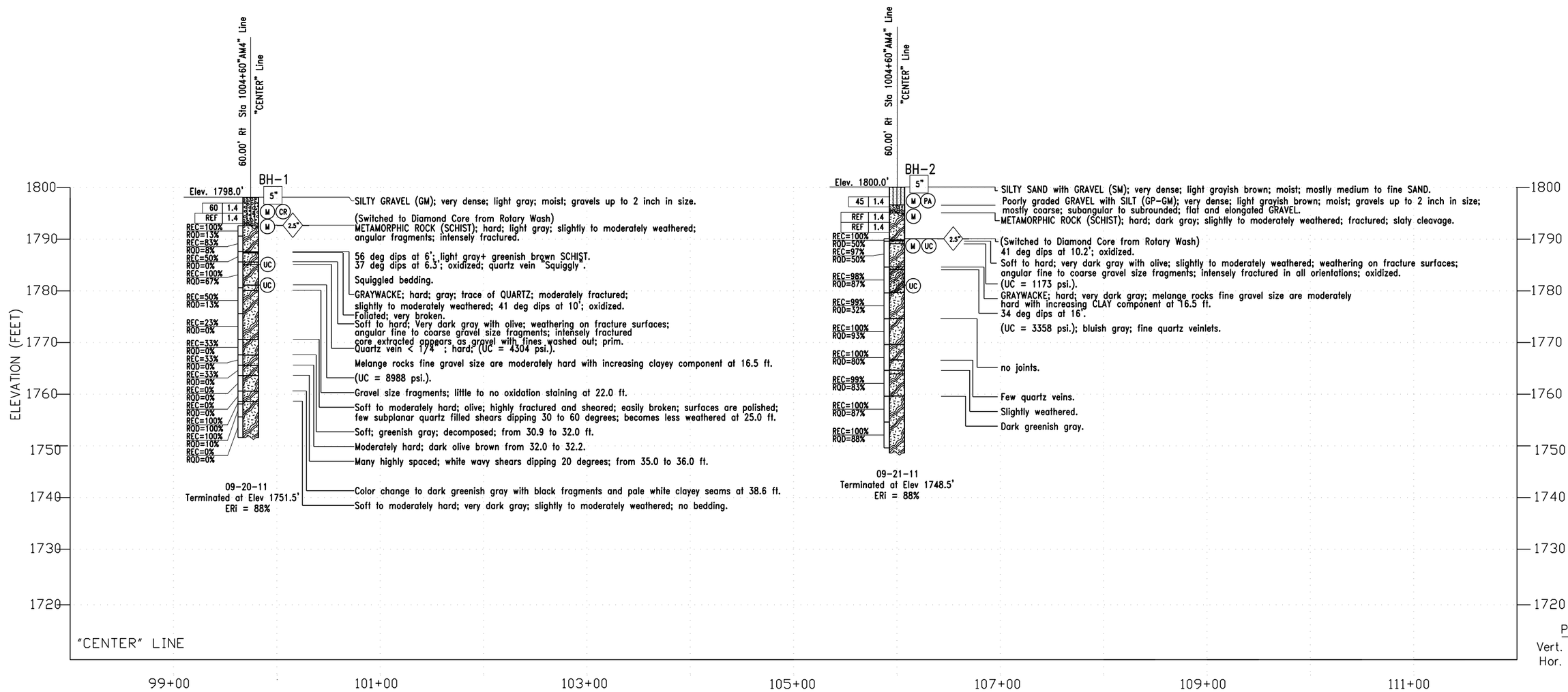

PROFILE
Vert. : 1" = 10'
Hor. : 1" = 50'

DESIGN OVERSIGHT	DRAWN BY	A. BAKANE	A. BAKANE	PREPARED FOR THE COUNTY OF SAN BENITO DEPARTMENT OF PUBLIC WORKS	DAVID WANG	BRIDGE NO. 43C027	PANOCHE ROAD BRIDGE	
SIGN OFF DATE	CHECKED BY	DAVID WANG	FIELD INVESTIGATION BY: DATE: SEPTEMBER 2011		PROJECT ENGINEER	POST MILES	LOG OF TEST BORINGS 4 OF 4	

GS GEOTECHNICAL LOG OF TEST BORINGS SHEET (ENGLISH) (REV. 7/16/10)

ORIGINAL SCALE IN INCHES FOR REDUCED PLANS 0 1 2 3

UNIT: X
PROJECT NUMBER & PHASE: X

DISREGARD PRINTS BEARING EARLIER REVISION DATES 12/21/2011

REVISION DATES | SHEET | OF

FILE => $REQUEST

CONTRACT NO.: X PROJECT ID: X

USERNAME => $USER DATE PLOTTED => $DATE TIME PLOTTED => $TIME

APPENDIX III

APPENDIX III

LABORATORY TESTS

Classification Tests
The field classifications of the samples were visually verified in the laboratory according to the Unified Soil Classification System. The results are presented in “Log of Test Borings”, Appendix A.

Moisture-Density
The natural moisture contents and dry unit weights were determined for selected undisturbed samples of the soils in general accordance with ASTM Test Method D 2216-92. This information was used to classify and correlate the soils. The results are presented at the appropriate depths on the "Log of Test Borings", Appendix A.

Grain Size Classification
Grain size classification tests (ASTM Test Method D422-63) were performed on selected samples of granular soil to aid in the classification. The results are presented on Plate B-2, “Grain Size Distribution Curves”.

Corrosion Test
Corrosion test was performed on selected sample to determine the corrosion potential of the soils. The pH and minimum resistively test was performed according to California Test Method 643, 417 and 422. The test was performed by Sunland Analytical. The test result is presented on Plate B-3.

Unconfined Compressive Tests
Strength tests were performed on selected rock core samples using unconfined compression machine. Unconfined compressive tests were performed in general accordance with ASTM Test Method D 7012D. This tests were performed Cooper Testing Laboratory. The results are presented on Plate B-4A thru Plate B-4D.

R-value Tests
R-value tests were performed on representative bulk samples for pavement design. The tests were performed according to California Test Method 301. The test results are presented on Plates B-5A and B-5B

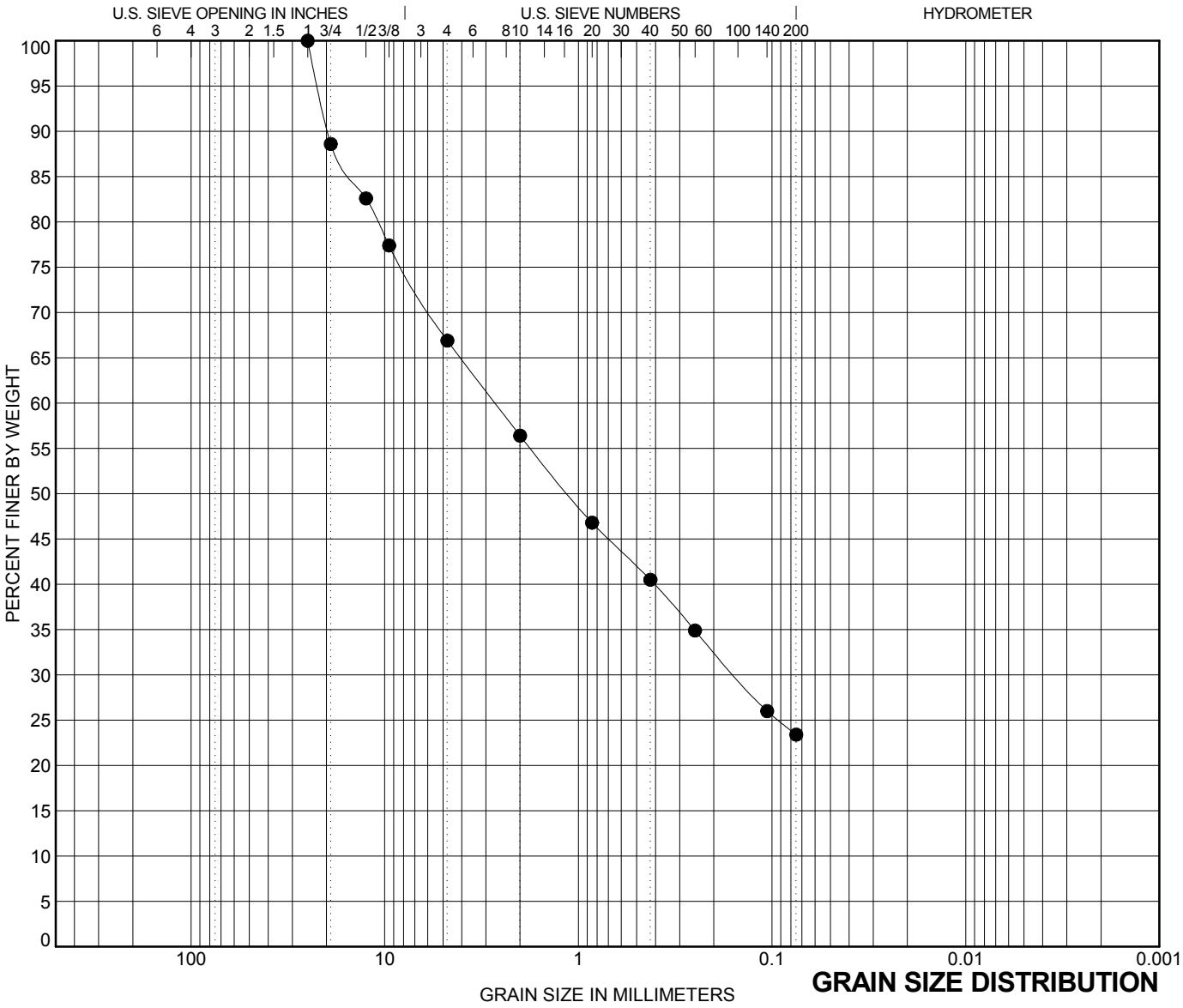

GRAIN SIZE DISTRIBUTION

COBBLES	GRAVEL		SAND			SILT OR CLAY
	coarse	fine	coarse	medium	fine	

	BORING	SAMPLE #	DEPTH	Classification	LL	PL	PI	Cc	Cu
●	**BH-2**	**1**	**2.0**	**SILTY SAND with GRAVEL (SM)**					

	BORING	SAMPLE #	DEPTH	D100	D60	D30	D10	%Gravel	%Sand	%Silt	%Clay
●	**BH-2**	**1**	**2.0**	**25**	**2.69**	**0.156**		**33.1**	**43.5**	**23.4**	

PARIKH CONSULTANTS, INC.
GEOTECHNICAL CONSULTANTS
MATERIALS ENGINEERING

PANOCHE ROAD BRIDGE
SAN BENITO, CALIFORNIA

JOB NO: 2011-107-FDN

PLATE NO: B-2

Sunland Analytical
11353 Pyrites Way, Suite 4
Rancho Cordova, CA 95670
(916) 852-8557

Date Reported 11/02/2011
Date Submitted 10/27/2011

To: Prav Dayah
Parikh Consultants, Inc.
2360 Qume Dr, Ste.A
San Jose, CA 95131

From: Gene Oliphant, Ph.D. \ Randy Horney
General Manager \ Lab Manager

The reported analysis was requested for the following location:
Location : 2011-107-PDN/PANOCHE Site ID : BH1#1 @ 2'.
Thank you for your business.

* For future reference to this analysis please use SUN # 61256-125862.

EVALUATION FOR SOIL CORROSION

Soil pH	7.44	
Minimum Resistivity	4.56 ohm-cm (x1000)	
Chloride	9.3 ppm	00.00093 %
Sulfate	2.4 ppm	00.00024 %

METHODS
pH and Min.Resistivity CA DOT Test #643
Sulfate CA DOT Test #417, Chloride CA DOT Test #422

PLATE: B-3

Unconfined Compressive Strength and Young's Modulus of Rock Core (ASTM D7012D)

CTL Job No.:	157-296A	Boring:	BH-1	Date:	11/16/2011
Client:	Parikh Consultants	Sample:	UC-1 Core 1	By:	PJ
Project Name:	Panoche Creek Bridge	Depth,ft.:	13	Checked:	DC
Project No.:	2011-107-FDN				

Visual Description: Bluish Gray Rock

Moisture Condition at Test: Sample was washed and in a moist state.

Test Temperature, (°C): Ambient

Remarks: A corner of the sample was missing and required capping. Therefore, the measured density is approximate. Sample failed along pre-existing fractures.

Sample Height, in.	5.00	**Unconfined Compressive Strength, psi**	**4304**
Sample Diameter, in.	2.39		
Height / Diameter	2.1		
Sample Area, in^2	4.49		
Wet Density, pcf	186.2	**Young's Modulus (E) (psi)**	**1,095,000**
Dry Density, pcf	185.6		
Moisture Content, %	0.3		
Strain Rate, % / min	0.05		

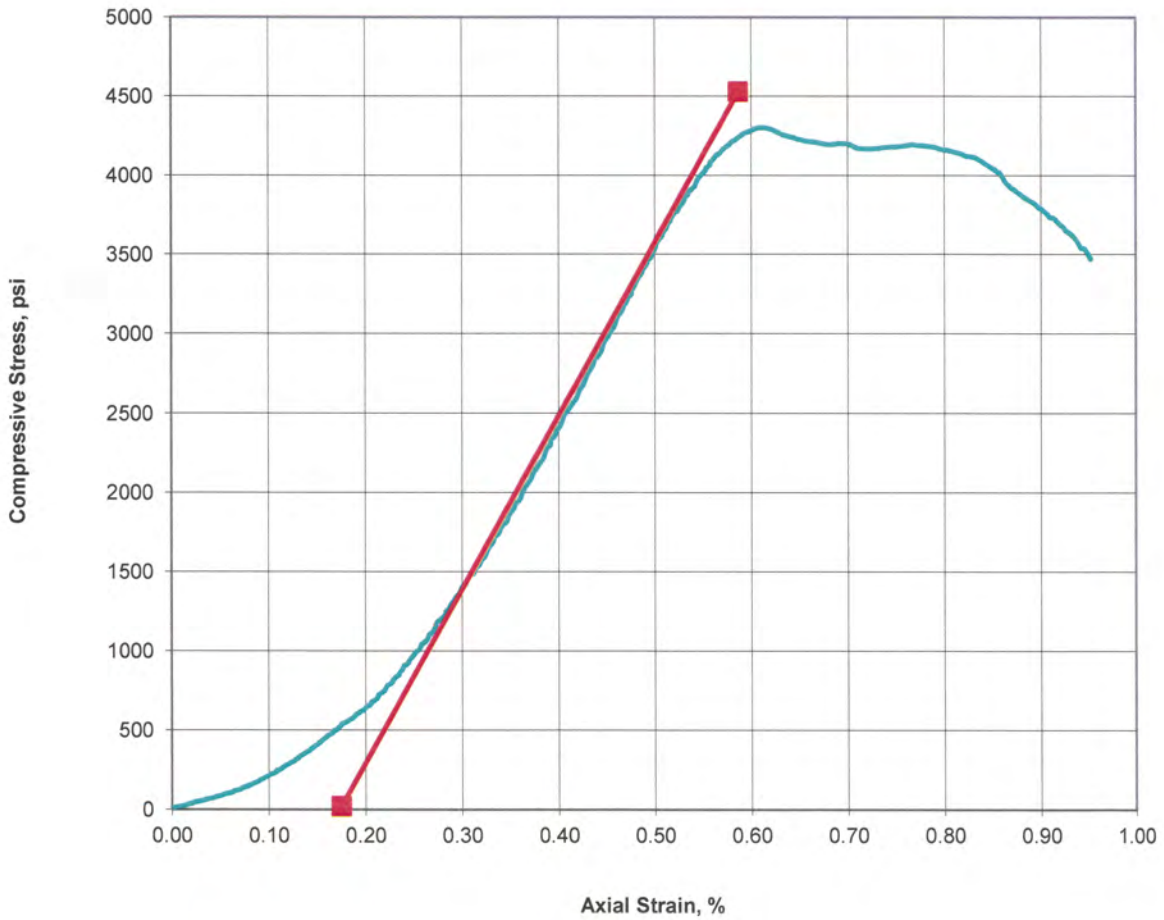

PLATE: B-4A

Unconfined Compressive Strength and Young's Modulus of Rock Core (ASTM D7012D)

CTL Job No.:	157-296B	Boring:	BH-1	Date:	11/16/2011
Client:	Parikh Consultants	Sample:	UC-2 Core 2	By:	PJ
Project Name:	Panoche Creek Bridge	Depth,ft.:	17	Checked:	DC
Project No.:	2011-107-FDN				

Visual Description: Bluish Gray Rock

Moisture Condition at Test: Sample was washed and in a moist state.

Test Temperature, (°C): Ambient

Remarks: Sample failed along a pre-existing fracture.

Sample Height, in.	5.02	**Unconfined Compressive Strength, psi**	**8988**
Sample Diameter, in.	2.39		
Height / Diameter	2.1		
Sample Area, in^2	4.49		
Wet Density, pcf	191.7	**Young's Modulus (E) (psi)**	**3,770,000**
Dry Density, pcf	191.4		
Moisture Content, %	0.2		
Strain Rate, % / min	0.05		

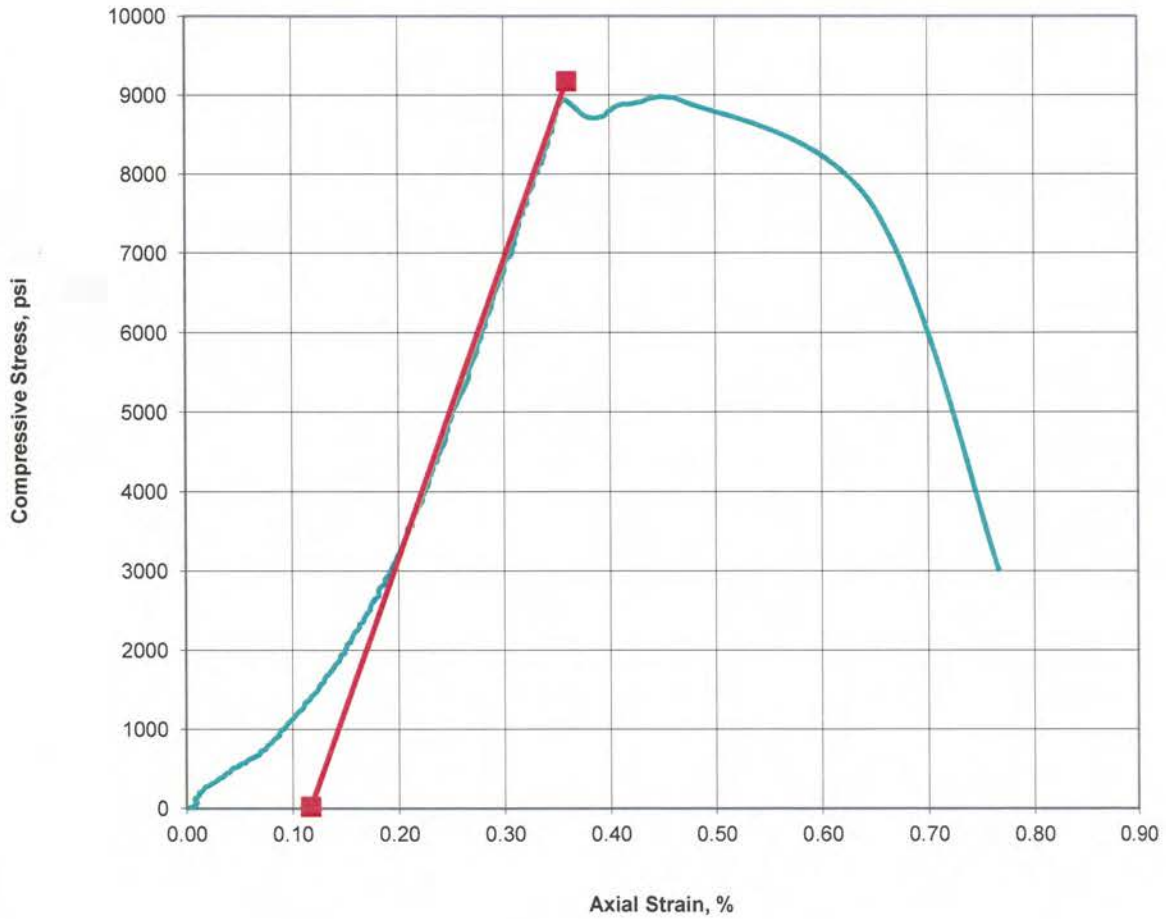

PLATE: B-4B

COOPER TESTING LABORATORY

Unconfined Compressive Strength and Young's Modulus of Rock Core (ASTM D7012D)

CTL Job No.:	157-296C	Boring:	BH-2	Date:	11/16/2011
Client:	Parikh Consultants	Sample:	UC-3 Core 3	By:	PJ
Project Name:	Panoche Creek Bridge	Depth,ft.:	11	Checked:	DC
Project No.:	2011-107-FDN				

Visual Description: Greenish Black Rock

Moisture Condition at Test: Sample was washed and in a moist state.

Test Temperature, (°C): Ambient

Remarks: Minor spalling occurred at ends of sample during trimming. Therefore, the measured density is approximate.

Sample Height, in.	5.01	**Unconfined Compressive Strength, psi**	**1173**
Sample Diameter, in.	2.47		
Height / Diameter	2.0		
Sample Area, in^2	4.80		
Wet Density, pcf	165.7	**Young's Modulus (E) (psi)**	**588,500**
Dry Density, pcf	164.2		
Moisture Content, %	0.9		
Strain Rate, % / min	0.05		

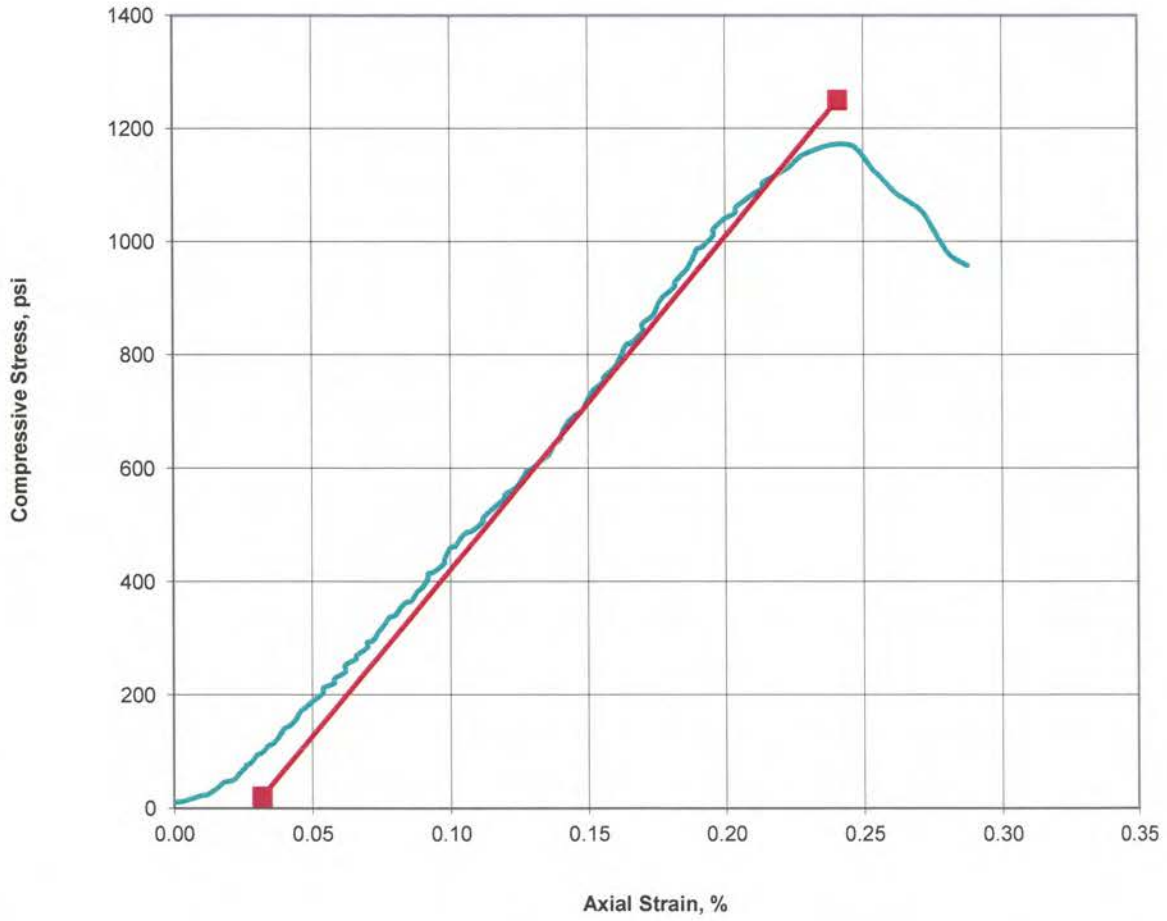

PLATE: B-4C

COOPER TESTING LABORATORY

Unconfined Compressive Strength and Young's Modulus of Rock Core (ASTM D7012D)

CTL Job No.:	157-296D	Boring:	BH-2	Date:	11/16/2011
Client:	Parikh Consultants	Sample:	UC-4 Core 4	By:	PJ
Project Name:	Panoche Creek Bridge	Depth,ft.:	19	Checked:	DC
Project No.:	2011-107-FDN				

Visual Description: Grayish Olive Green Rock

Moisture Condition at Test: Sample was washed and in a moist state.

Test Temperature, (°C): Ambient

Remarks: Minor spalling occurred at ends of sample during trimming. Therefore, the measured density is approximate.

Sample Height, in.	5.03	**Unconfined Compressive Strength, psi**	**3358**
Sample Diameter, in.	2.48		
Height / Diameter	2.0		
Sample Area, in^2	4.82		
Wet Density, pcf	168.3	**Young's Modulus (E) (psi)**	**1,275,000**
Dry Density, pcf	165.5		
Moisture Content, %	1.7		
Strain Rate, % / min	0.05		

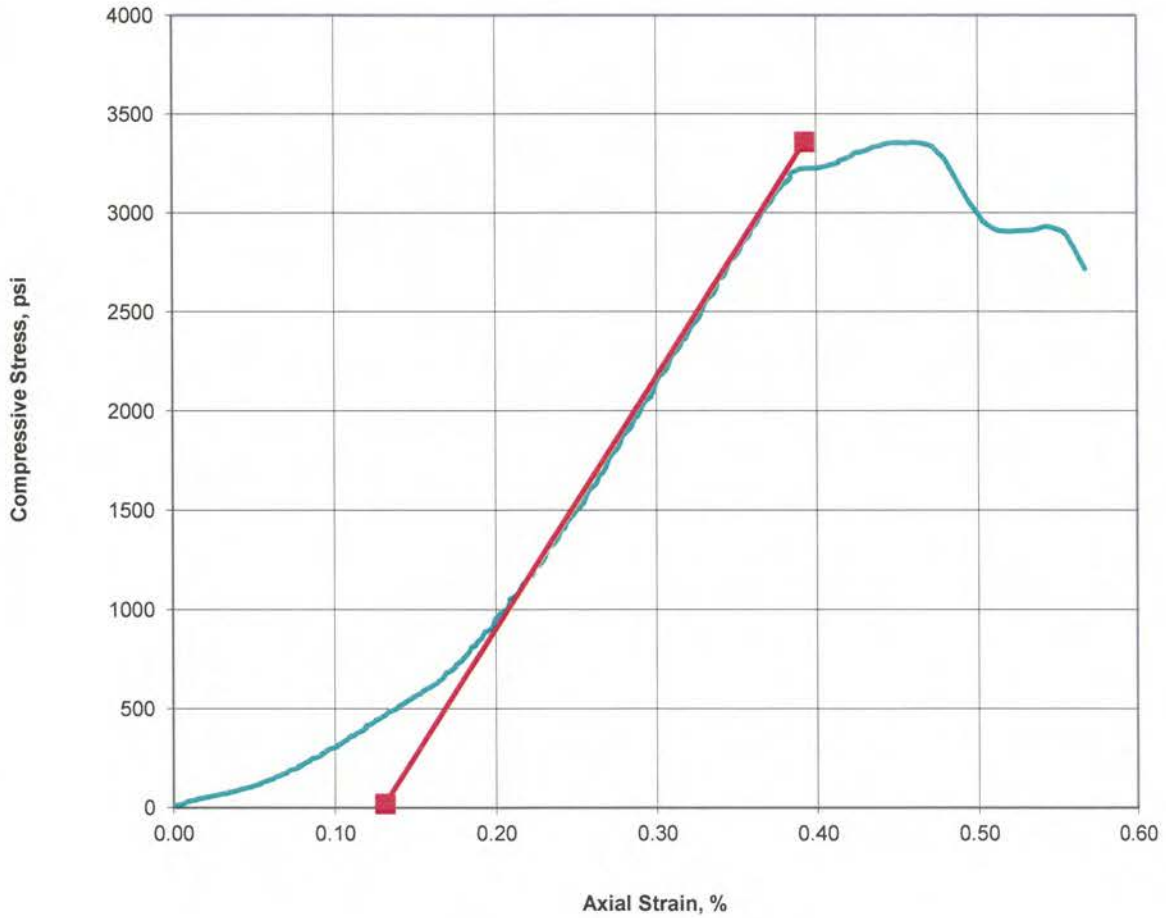

PLATE: B-4D

R-VALUE REPORT

Parikh Consultants, Inc. — ASTM D2844 or CTM 301 — (408) 452-9000

Project Name:	Panoche Road Bridge Project	Date:	10/11/11
Client:	Quincy Engineering Inc.	Project #:	2011-107-FDN
Sample #:	BH2 / R2 — Depth: 0'-5'	Lab #:	M832
Location / Source:	On-Site / Native	Sample Date:	
Material :	Lean Clay with Gravel, brown	Sampled By:	

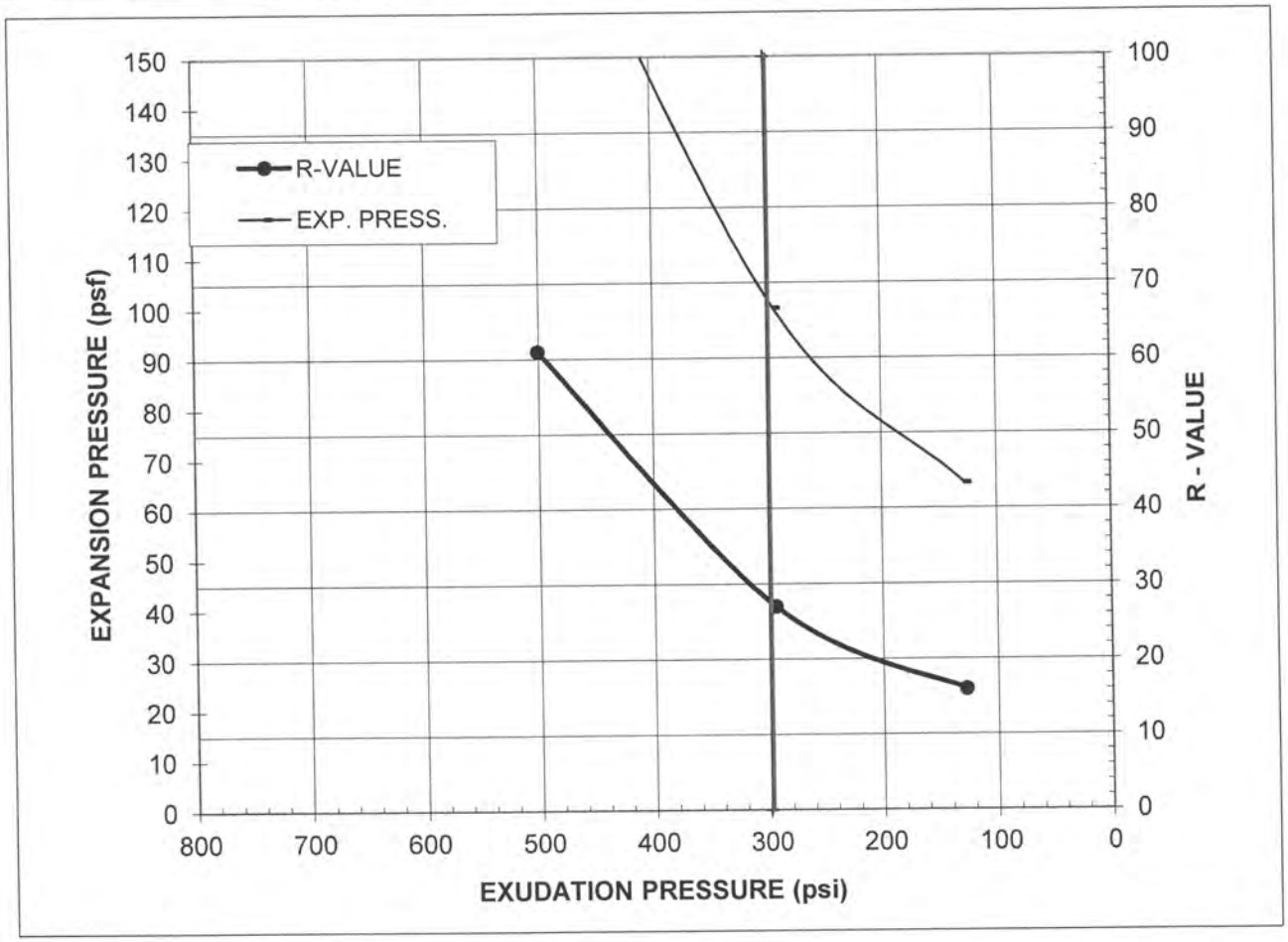

Specimen No.	A	B	C
Exudation Pressure, psi	128	294	501
Expansion Pressure, psf	65	100	195
R-Value	16	27	61
Moisture Content at Test, %	10.6	9.7	8.8
Dry Density at Test, pcf	127.5	131.0	132.9

R-Value @ 300 psi Exudation Pressure = **27**

Expansion Pressure @300 psi Exudation, psf = **100**

Minimum R-Value Requirement:

Comments:

Report By: Prav Dayah

PLATE: B-5A

RVALUE with calcs pdp

R-VALUE REPORT

Parikh Consultants, Inc. ASTM D2844 or CTM 301 (408) 452-9000

Project Name:	Panoche Road Bridge Project	Date:	10/11/11
Client:	Quincy Engineering Inc.	Project #:	2011-107-FDN
Sample #:	BH1 / R1 Depth: 0'-5'	Lab #:	M832
Location / Source:	On-Site / Native	Sample Date:	
Material :	Lean Clay with Gravel, gray	Sampled By:	

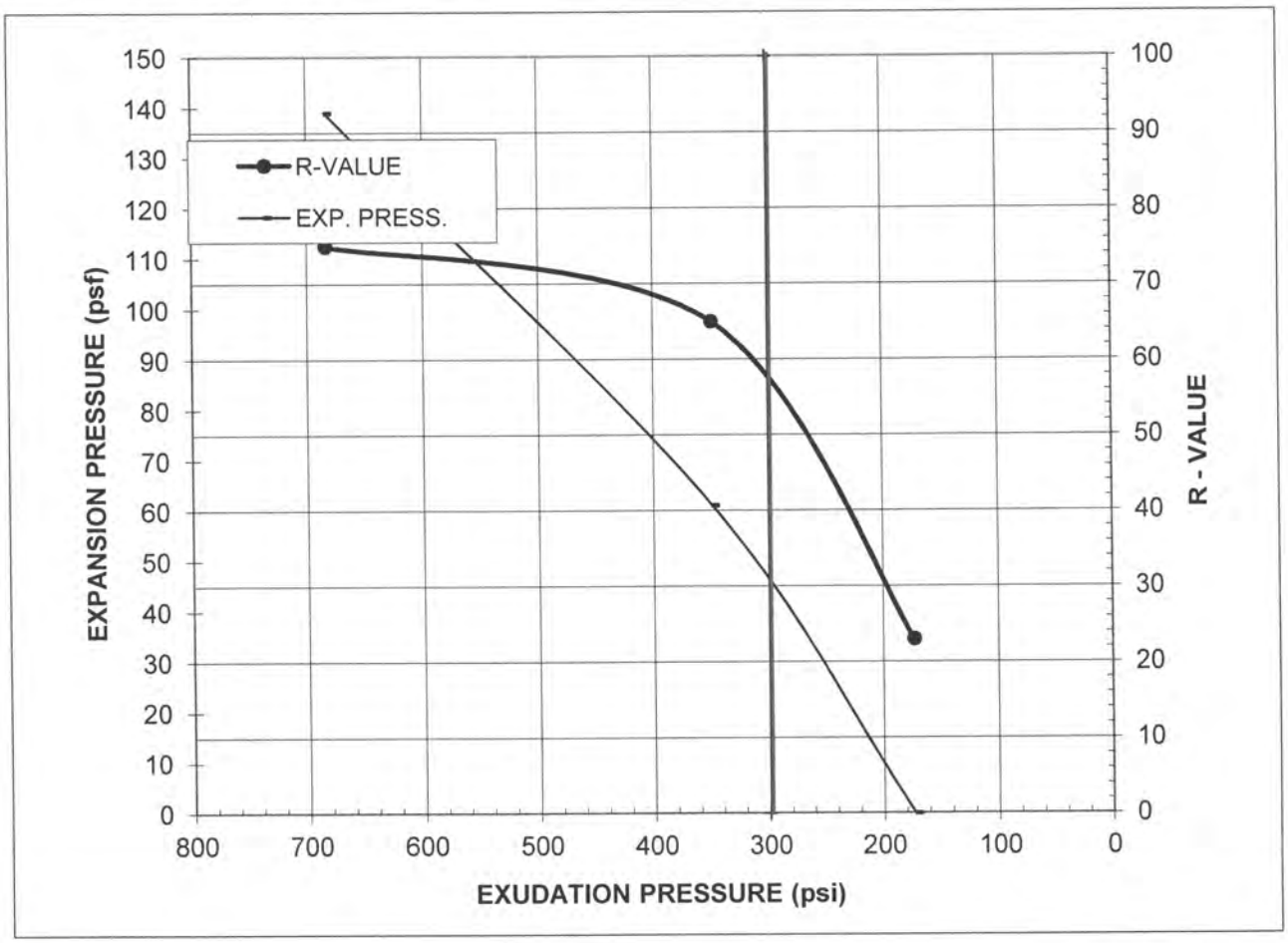

Specimen No.	A	B	C
Exudation Pressure, psi	173	349	684
Expansion Pressure, psf	0	61	139
R-Value	23	65	75
Moisture Content at Test, %	8.1	7.2	6.6
Dry Density at Test, pcf	132.7	134.8	135.2

R-Value @ 300 psi Exudation Pressure = 57

Expansion Pressure @300 psi Exudation, psf = **45**

Minimum R-Value Requirement:

Comments:

Report By: Prav Dayah

PLATE: B-5B

RVALUE with calcs pdp

APPENDIX IV

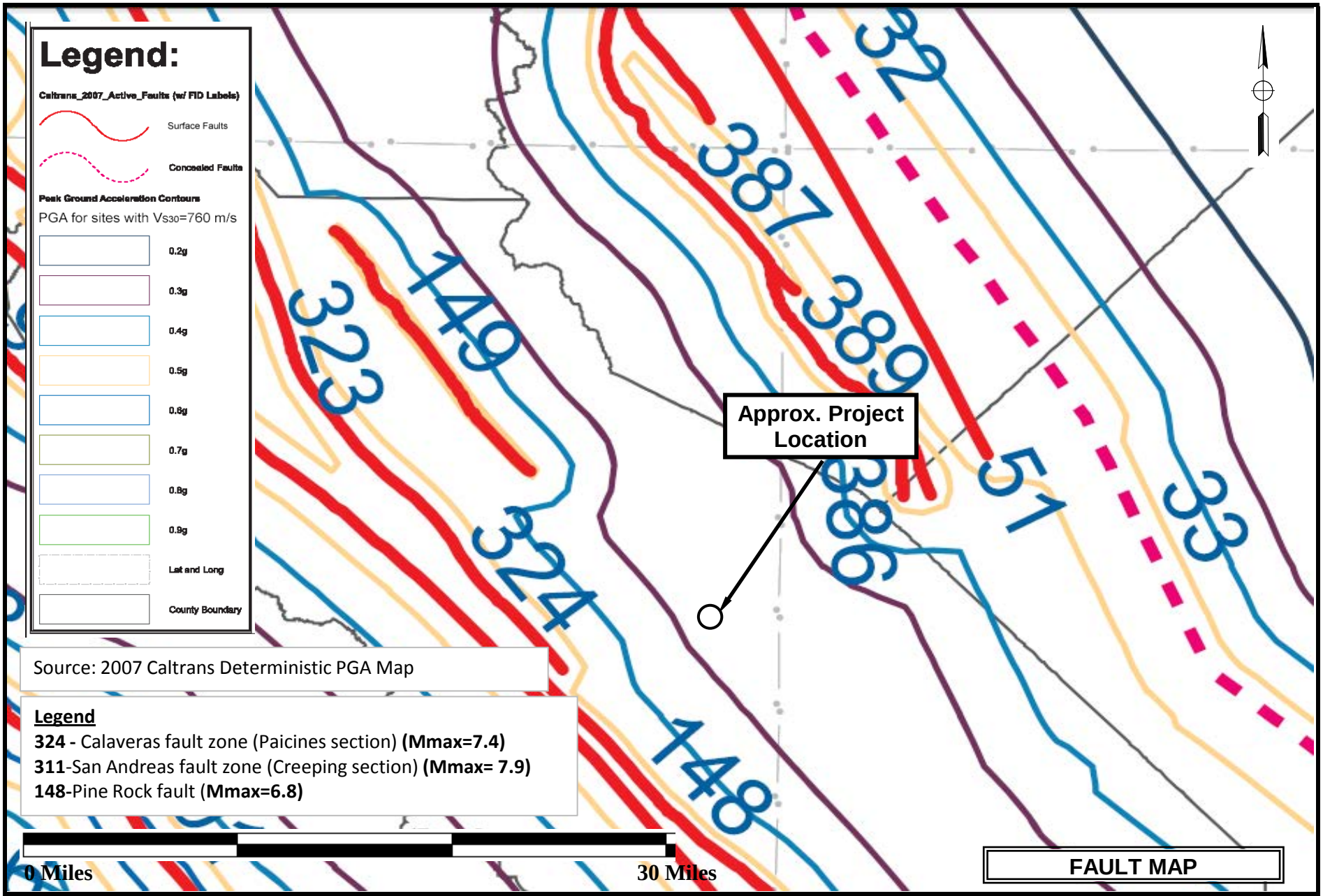

Source: 2007 Caltrans Deterministic PGA Map

Legend

324 - Calaveras fault zone (Paicines section) **(Mmax=7.4)**
311-San Andreas fault zone (Creeping section) **(Mmax= 7.9)**
148-Pine Rock fault (**Mmax=6.8)**

FAULT MAP

PARIKH CONSULTANTS, INC.
GEOTECHNICAL CONSULTANTS
MATERIALS TESTING

PANOCHE ROAD BRIDGE
SAN BENITO COUNTY, CALIFORNIA

JOB NO.: 2011-107-FDN	PLATE NO.: IV-1

RECOMMENDED ARS CURVE

Probabilistic Approach (5% Damping)

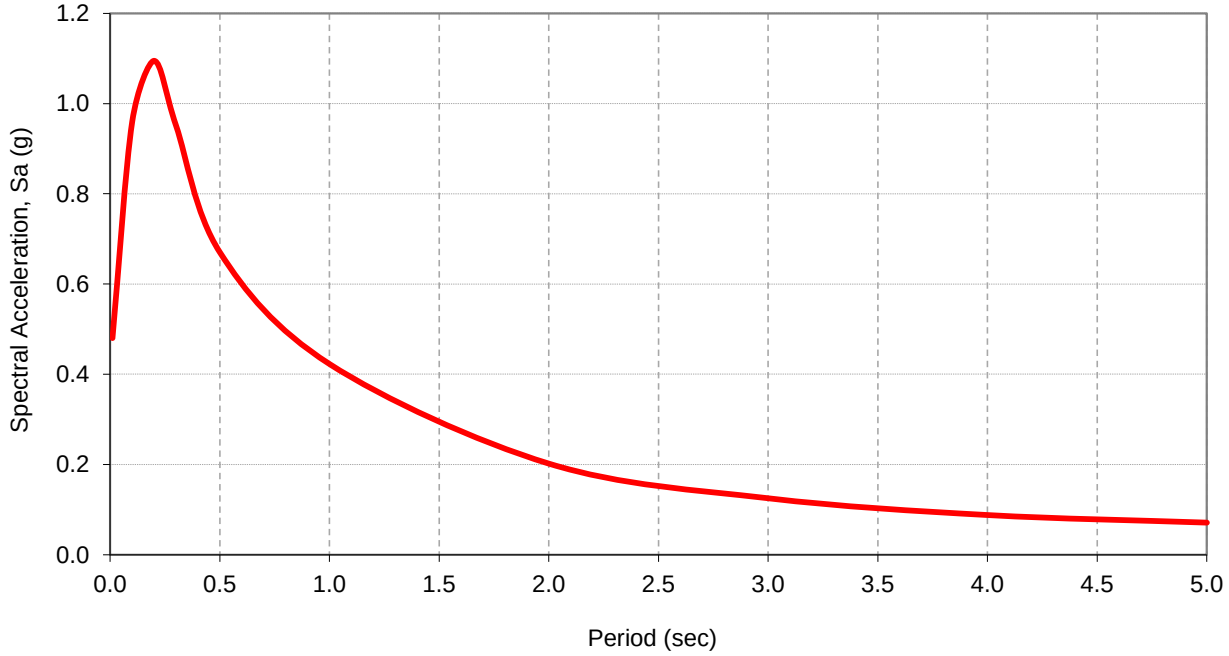

Site Information

Latitude:	36.6540
Longitude	-121.0670
V_{S30} (m/s) =	560
$Z_{1.0}$ (m) =	N/A
$Z_{2.5}$ (km) =	N/A
Near Fault Factor, Derived from USGS Deagg. Dist (km) =	8.2

Governing Curve:

Caltrans ARS Online Probablistic Curve

Recommended Response Spectrum

Period (sec)	Caltrans Online Spectral Acceleration (g)	Adjusted for Near Fault Effect	Adjusted For Basin Effect	Final Adjusted Spectral Acceleration (g)
0.0	0.48	1.000	1.000	0.480
0.1	0.96	1.000	1.000	0.960
0.2	1.095	1.000	1.000	1.095
0.3	0.951	1.000	1.000	0.951
0.5	0.67	1.000	1.000	0.670
1.0	0.352	1.200	1.000	0.422
2.0	0.168	1.200	1.000	0.202
3.0	0.104	1.200	1.000	0.125
4.0	0.073	1.200	1.000	0.088
5.0	0.059	1.200	1.000	0.071

Source:

1. Caltrans ARS Online tool (V.1.0.4, http://dap3.dot.ca.gov/shake_stable/)
2. USGS Deaggregation 2008 beta (http://eqint.cr.usgs.gov/deaggint/2008/index.php)
3. Caltrans Geotechnical Services Design Manual (Version 1.0)

Note:

Refer to "Probablistic Response Spectum Spreadsheet" (attached) for development of the recommended ARS curve.

SELECT SITE LOCATION

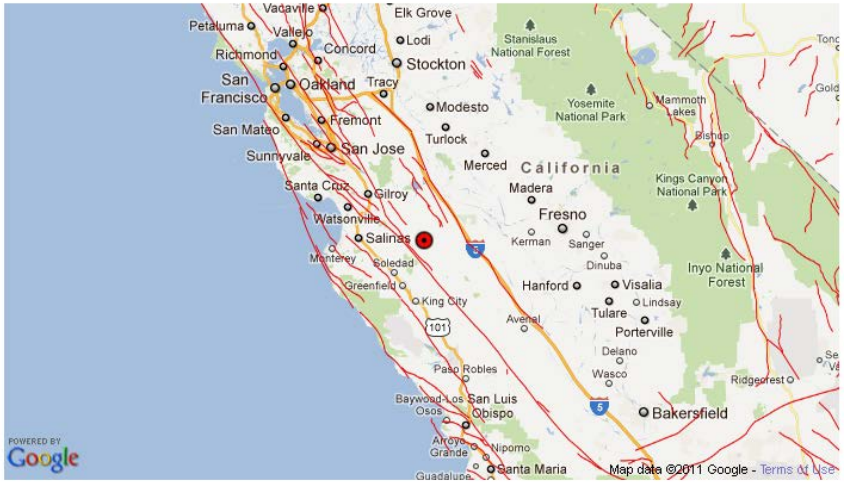

CALCULATED SPECTRA

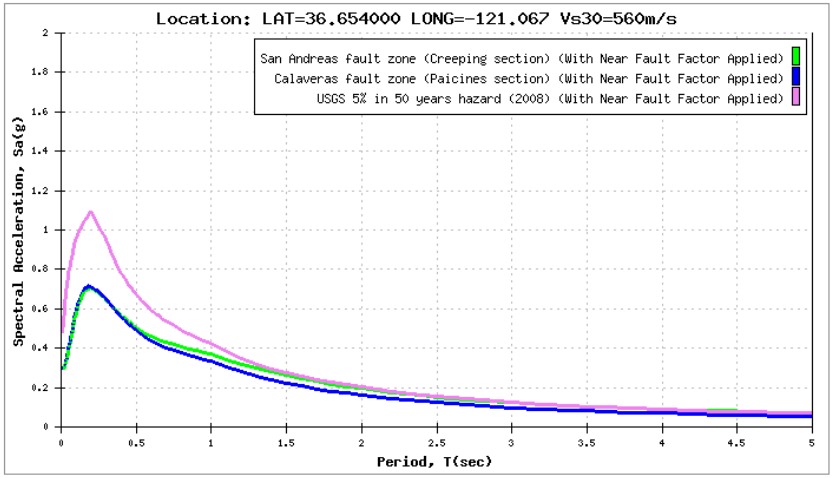

SITE DATA

Shear Wave Velocity, Vs30:	560 m/s
Latitude:	36.654000
Longitude:	-121.067000
Depth to Vs = 1.0 km/s:	74 m
Depth to Vs = 2.5 km/s:	2.00 km

DETERMINISTIC

San Andreas fault zone (Creeping section)

Fault ID:	311
Maximum Magnitude (MMax):	7.9
Fault Type:	RLSS
Fault Dip:	90 Deg
Dip Direction:	V
Bottom of Rupture Plane:	12.00 km
Top of Rupture Plane(Ztor):	0.00 km
Rrup	12.79 km
Rjb:	12.79 km
Rx:	12.79 km
Fnorm:	0
Frev:	0

Period	SA(Base Spectrum)	Basin Factor	Near Fault Factor(Applied)	SA(Final Spectrum)
0.01	0.297	1.000	1.000	0.297
0.02	0.302	1.000	1.000	0.302
0.022	0.306	1.000	1.000	0.306
0.025	0.312	1.000	1.000	0.312
0.029	0.320	1.000	1.000	0.320
0.03	0.323	1.000	1.000	0.323
0.032	0.329	1.000	1.000	0.329
0.035	0.338	1.000	1.000	0.338
0.036	0.341	1.000	1.000	0.341
0.04	0.354	1.000	1.000	0.354
0.042	0.361	1.000	1.000	0.361
0.044	0.368	1.000	1.000	0.368
0.045	0.371	1.000	1.000	0.371
0.046	0.374	1.000	1.000	0.374
0.048	0.381	1.000	1.000	0.381
0.05	0.388	1.000	1.000	0.388
0.055	0.409	1.000	1.000	0.409
0.06	0.429	1.000	1.000	0.429
0.065	0.449	1.000	1.000	0.449
0.067	0.457	1.000	1.000	0.457
0.07	0.469	1.000	1.000	0.469
0.075	0.488	1.000	1.000	0.488
0.08	0.507	1.000	1.000	0.507
0.085	0.525	1.000	1.000	0.525
0.09	0.542	1.000	1.000	0.542
0.095	0.559	1.000	1.000	0.559
0.1	0.576	1.000	1.000	0.576
0.11	0.603	1.000	1.000	0.603
0.12	0.627	1.000	1.000	0.627
0.13	0.647	1.000	1.000	0.647
0.133	0.653	1.000	1.000	0.653
0.14	0.664	1.000	1.000	0.664
0.15	0.679	1.000	1.000	0.679
0.16	0.688	1.000	1.000	0.688
0.17	0.694	1.000	1.000	0.694
0.18	0.699	1.000	1.000	0.699

0.19	0.702	1.000	1.000	0.702
0.2	0.704	1.000	1.000	0.704
0.22	0.695	1.000	1.000	0.695
0.24	0.684	1.000	1.000	0.684
0.25	0.678	1.000	1.000	0.678
0.26	0.671	1.000	1.000	0.671
0.28	0.658	1.000	1.000	0.658
0.29	0.651	1.000	1.000	0.651
0.3	0.644	1.000	1.000	0.644
0.32	0.627	1.000	1.000	0.627
0.34	0.611	1.000	1.000	0.611
0.35	0.603	1.000	1.000	0.603
0.36	0.595	1.000	1.000	0.595
0.38	0.579	1.000	1.000	0.579
0.4	0.563	1.000	1.000	0.563
0.42	0.550	1.000	1.000	0.550
0.44	0.538	1.000	1.000	0.538
0.45	0.532	1.000	1.000	0.532
0.46	0.526	1.000	1.000	0.526
0.48	0.514	1.000	1.000	0.514
0.5	0.503	1.000	1.000	0.503
0.55	0.471	1.000	1.020	0.481
0.6	0.444	1.000	1.040	0.462
0.65	0.420	1.000	1.060	0.445
0.667	0.412	1.000	1.067	0.440
0.7	0.399	1.000	1.080	0.431
0.75	0.380	1.000	1.100	0.418
0.8	0.363	1.000	1.120	0.406
0.85	0.348	1.000	1.140	0.396
0.9	0.334	1.000	1.160	0.387
0.95	0.321	1.000	1.180	0.379
1	0.309	1.000	1.200	0.371
1.1	0.286	1.000	1.200	0.343
1.2	0.266	1.000	1.200	0.319
1.3	0.249	1.000	1.200	0.298
1.4	0.233	1.000	1.200	0.279
1.5	0.219	1.000	1.200	0.262
1.6	0.205	1.000	1.200	0.246
1.7	0.193	1.000	1.200	0.231
1.8	0.182	1.000	1.200	0.218
1.9	0.172	1.000	1.200	0.206
2	0.163	1.000	1.200	0.195
2.2	0.146	1.000	1.200	0.175
2.4	0.133	1.000	1.200	0.159
2.5	0.127	1.000	1.200	0.152
2.6	0.121	1.000	1.200	0.145
2.8	0.112	1.000	1.200	0.134
3	0.103	1.000	1.200	0.124
3.2	0.096	1.000	1.200	0.115
3.4	0.090	1.000	1.200	0.108
3.5	0.087	1.000	1.200	0.104
3.6	0.084	1.000	1.200	0.101
3.8	0.079	1.000	1.200	0.095
4	0.075	1.000	1.200	0.090
4.2	0.071	1.000	1.200	0.085
4.4	0.068	1.000	1.200	0.081
4.6	0.064	1.000	1.200	0.077
4.8	0.062	1.000	1.200	0.074
5	0.059	1.000	1.200	0.071

Calaveras fault zone (Paicines section)

Fault ID:	324
Maximum Magnitude (MMax):	7.4
Fault Type:	RLSS
Fault Dip:	90 Deg
Dip Direction:	V
Bottom of Rupture Plane:	11.00 km
Top of Rupture Plane(Ztor):	0.00 km
Rrup	10.20 km
Rjb:	10.20 km
Rx:	9.93 km
Fnorm:	0
Frev:	0

Period	**SA(Base Spectrum)**	**Basin Factor**	**Near Fault Factor(Applied)**	**SA(Final Spectrum)**
0.01	0.301	1.000	1.000	0.301
0.02	0.306	1.000	1.000	0.306
0.022	0.311	1.000	1.000	0.311
0.025	0.317	1.000	1.000	0.317
0.029	0.325	1.000	1.000	0.325
0.03	0.328	1.000	1.000	0.328
0.032	0.334	1.000	1.000	0.334
0.035	0.344	1.000	1.000	0.344
0.036	0.347	1.000	1.000	0.347
0.04	0.361	1.000	1.000	0.361
0.042	0.368	1.000	1.000	0.368
0.044	0.375	1.000	1.000	0.375
0.045	0.378	1.000	1.000	0.378
0.046	0.382	1.000	1.000	0.382
0.048	0.389	1.000	1.000	0.389
0.05	0.396	1.000	1.000	0.396
0.055	0.417	1.000	1.000	0.417
0.06	0.439	1.000	1.000	0.439
0.065	0.460	1.000	1.000	0.460
0.067	0.468	1.000	1.000	0.468
0.07	0.480	1.000	1.000	0.480
0.075	0.500	1.000	1.000	0.500
0.08	0.519	1.000	1.000	0.519
0.085	0.538	1.000	1.000	0.538
0.09	0.556	1.000	1.000	0.556
0.095	0.573	1.000	1.000	0.573
0.1	0.590	1.000	1.000	0.590
0.11	0.617	1.000	1.000	0.617

0.12	0.641	1.000	1.000	0.641
0.13	0.661	1.000	1.000	0.661
0.133	0.666	1.000	1.000	0.666
0.14	0.678	1.000	1.000	0.678
0.15	0.693	1.000	1.000	0.693
0.16	0.700	1.000	1.000	0.700
0.17	0.706	1.000	1.000	0.706
0.18	0.710	1.000	1.000	0.710
0.19	0.713	1.000	1.000	0.713
0.2	0.714	1.000	1.000	0.714
0.22	0.703	1.000	1.000	0.703
0.24	0.690	1.000	1.000	0.690
0.25	0.683	1.000	1.000	0.683
0.26	0.675	1.000	1.000	0.675
0.28	0.660	1.000	1.000	0.660
0.29	0.652	1.000	1.000	0.652
0.3	0.644	1.000	1.000	0.644
0.32	0.626	1.000	1.000	0.626
0.34	0.609	1.000	1.000	0.609
0.35	0.600	1.000	1.000	0.600
0.36	0.592	1.000	1.000	0.592
0.38	0.575	1.000	1.000	0.575
0.4	0.559	1.000	1.000	0.559
0.42	0.544	1.000	1.000	0.544
0.44	0.529	1.000	1.000	0.529
0.45	0.522	1.000	1.000	0.522
0.46	0.515	1.000	1.000	0.515
0.48	0.501	1.000	1.000	0.501
0.5	0.489	1.000	1.000	0.489
0.55	0.453	1.000	1.020	0.462
0.6	0.423	1.000	1.040	0.440
0.65	0.397	1.000	1.060	0.420
0.667	0.388	1.000	1.067	0.414
0.7	0.373	1.000	1.080	0.403
0.75	0.353	1.000	1.100	0.388
0.8	0.335	1.000	1.120	0.375
0.85	0.318	1.000	1.140	0.363
0.9	0.304	1.000	1.160	0.352
0.95	0.290	1.000	1.180	0.342
1	0.278	1.000	1.200	0.333
1.1	0.254	1.000	1.200	0.305
1.2	0.234	1.000	1.200	0.281
1.3	0.216	1.000	1.200	0.259
1.4	0.200	1.000	1.200	0.241
1.5	0.187	1.000	1.200	0.224
1.6	0.174	1.000	1.200	0.208
1.7	0.162	1.000	1.200	0.194
1.8	0.152	1.000	1.200	0.182
1.9	0.142	1.000	1.200	0.171
2	0.134	1.000	1.200	0.161
2.2	0.119	1.000	1.200	0.143
2.4	0.108	1.000	1.200	0.129
2.5	0.102	1.000	1.200	0.123
2.6	0.098	1.000	1.200	0.117
2.8	0.089	1.000	1.200	0.107
3	0.082	1.000	1.200	0.099
3.2	0.076	1.000	1.200	0.091
3.4	0.071	1.000	1.200	0.085
3.5	0.068	1.000	1.200	0.082
3.6	0.066	1.000	1.200	0.079
3.8	0.062	1.000	1.200	0.074
4	0.058	1.000	1.200	0.070
4.2	0.055	1.000	1.200	0.066
4.4	0.052	1.000	1.200	0.062
4.6	0.049	1.000	1.200	0.059
4.8	0.047	1.000	1.200	0.057
5	0.045	1.000	1.200	0.054

PROBABILISTIC

Probabilistic Model
USGS Seismic Hazard Map(2008) 975 Year Return Period

Period	**SA(Base Spectrum)**	**Basin Factor**	**Near Fault Factor(Applied)**	**SA(Final Spectrum)**
0.01	0.480	1.000	1.000	0.480
0.02	0.591	1.000	1.000	0.591
0.022	0.609	1.000	1.000	0.609
0.025	0.632	1.000	1.000	0.632
0.029	0.661	1.000	1.000	0.661
0.03	0.668	1.000	1.000	0.668
0.032	0.681	1.000	1.000	0.681
0.035	0.700	1.000	1.000	0.700
0.036	0.706	1.000	1.000	0.706
0.04	0.728	1.000	1.000	0.728
0.042	0.739	1.000	1.000	0.739
0.044	0.750	1.000	1.000	0.750
0.045	0.755	1.000	1.000	0.755
0.046	0.760	1.000	1.000	0.760
0.048	0.770	1.000	1.000	0.770
0.05	0.779	1.000	1.000	0.779
0.055	0.802	1.000	1.000	0.802
0.06	0.823	1.000	1.000	0.823
0.065	0.843	1.000	1.000	0.843
0.067	0.851	1.000	1.000	0.851
0.07	0.862	1.000	1.000	0.862
0.075	0.880	1.000	1.000	0.880
0.08	0.897	1.000	1.000	0.897
0.085	0.914	1.000	1.000	0.914

0.09	0.930	1.000	1.000	0.930
0.095	0.945	1.000	1.000	0.945
0.1	0.960	1.000	1.000	0.960
0.11	0.977	1.000	1.000	0.977
0.12	0.994	1.000	1.000	0.994
0.13	1.009	1.000	1.000	1.009
0.133	1.013	1.000	1.000	1.013
0.14	1.023	1.000	1.000	1.023
0.15	1.037	1.000	1.000	1.037
0.16	1.050	1.000	1.000	1.050
0.17	1.062	1.000	1.000	1.062
0.18	1.073	1.000	1.000	1.073
0.19	1.085	1.000	1.000	1.085
0.2	1.095	1.000	1.000	1.095
0.22	1.059	1.000	1.000	1.059
0.24	1.028	1.000	1.000	1.028
0.25	1.013	1.000	1.000	1.013
0.26	0.999	1.000	1.000	0.999
0.28	0.974	1.000	1.000	0.974
0.29	0.962	1.000	1.000	0.962
0.3	0.951	1.000	1.000	0.951
0.32	0.910	1.000	1.000	0.910
0.34	0.873	1.000	1.000	0.873
0.35	0.856	1.000	1.000	0.856
0.36	0.839	1.000	1.000	0.839
0.38	0.809	1.000	1.000	0.809
0.4	0.781	1.000	1.000	0.781
0.42	0.755	1.000	1.000	0.755
0.44	0.732	1.000	1.000	0.732
0.45	0.721	1.000	1.000	0.721
0.46	0.710	1.000	1.000	0.710
0.48	0.689	1.000	1.000	0.689
0.5	0.670	1.000	1.000	0.670
0.55	0.616	1.000	1.020	0.628
0.6	0.570	1.000	1.040	0.593
0.65	0.530	1.000	1.060	0.562
0.667	0.518	1.000	1.067	0.553
0.7	0.497	1.000	1.080	0.536
0.75	0.467	1.000	1.100	0.514
0.8	0.438	1.000	1.120	0.491
0.85	0.413	1.000	1.140	0.471
0.9	0.390	1.000	1.160	0.453
0.95	0.370	1.000	1.180	0.437
1	0.352	1.000	1.200	0.423
1.1	0.318	1.000	1.200	0.382
1.2	0.290	1.000	1.200	0.348
1.3	0.266	1.000	1.200	0.319
1.4	0.246	1.000	1.200	0.295
1.5	0.229	1.000	1.200	0.274
1.6	0.213	1.000	1.200	0.256
1.7	0.200	1.000	1.200	0.240
1.8	0.188	1.000	1.200	0.226
1.9	0.178	1.000	1.200	0.213
2	0.168	1.000	1.200	0.202
2.2	0.150	1.000	1.200	0.180
2.4	0.136	1.000	1.200	0.163
2.5	0.129	1.000	1.200	0.155
2.6	0.123	1.000	1.200	0.148
2.8	0.113	1.000	1.200	0.136
3	0.104	1.000	1.200	0.125
3.2	0.096	1.000	1.200	0.115
3.4	0.089	1.000	1.200	0.107
3.5	0.086	1.000	1.200	0.103
3.6	0.083	1.000	1.200	0.100
3.8	0.078	1.000	1.200	0.093
4	0.073	1.000	1.200	0.087
4.2	0.070	1.000	1.200	0.084
4.4	0.067	1.000	1.200	0.080
4.6	0.064	1.000	1.200	0.077
4.8	0.061	1.000	1.200	0.074
5	0.059	1.000	1.200	0.071

Envelope Data

Period	**SA**
0.01	0.480
0.02	0.591
0.022	0.609
0.025	0.632
0.029	0.661
0.03	0.668
0.032	0.681
0.035	0.700
0.036	0.706
0.04	0.728
0.042	0.739
0.044	0.750
0.045	0.755
0.046	0.760
0.048	0.770
0.05	0.779
0.055	0.802
0.06	0.823
0.065	0.843
0.067	0.851
0.07	0.862

0.075	0.880
0.08	0.897
0.085	0.914
0.09	0.930
0.095	0.945
0.1	0.960
0.11	0.977
0.12	0.994
0.13	1.009
0.133	1.013
0.14	1.023
0.15	1.037
0.16	1.050
0.17	1.062
0.18	1.073
0.19	1.085
0.2	1.095
0.22	1.059
0.24	1.028
0.25	1.013
0.26	0.999
0.28	0.974
0.29	0.962
0.3	0.951
0.32	0.910
0.34	0.873
0.35	0.856
0.36	0.839
0.38	0.809
0.4	0.781
0.42	0.755
0.44	0.732
0.45	0.721
0.46	0.710
0.48	0.689
0.5	0.670
0.55	0.628
0.6	0.593
0.65	0.562
0.667	0.553
0.7	0.536
0.75	0.514
0.8	0.491
0.85	0.471
0.9	0.453
0.95	0.437
1	0.423
1.1	0.382
1.2	0.348
1.3	0.319
1.4	0.295
1.5	0.274
1.6	0.256
1.7	0.240
1.8	0.226
1.9	0.213
2	0.202
2.2	0.180
2.4	0.163
2.5	0.155
2.6	0.148
2.8	0.136
3	0.125
3.2	0.115
3.4	0.108
3.5	0.104
3.6	0.101
3.8	0.095
4	0.090
4.2	0.085
4.4	0.081
4.6	0.077
4.8	0.074
5	0.071

APPENDIX E

HYDRAULIC STUDY REPORT AND SUPPLEMENTAL LOCATION HYDRAULIC REPORT

This page intentionally left blank

Panoche Road at Tres Pinos Creek Bridge Replacement Project
San Benito County, California

Location Hydraulic Study Report

Federal Aid Project Number: BRLS-5943(056)
San Benito County Project Number: 698

Prepared for:

San Benito County
Department of Public Works

Prepared by:

July 2013

Panoche Road at Tres Pinos Creek Bridge Replacement Project
San Benito County, California

Location Hydraulic Study Report

Federal Aid Project Number: BRLS-5943(056)
San Benito County Project Number: 698

[The cover photo is the upstream face of the Panoche Road bridge from the California Department of Transportation's Bridge Inspection Report from December 3, 2008, and it was taken facing southeast.]

Submitted to:
San Benito County Department of Public Works

This report has been prepared by or under the supervision of the following Registered Engineer. The Registered Civil Engineer attests to the technical information contained herein and has judged the qualifications of any technical specialists providing engineering data upon which recommendations, conclusions, and decisions are based.

Han-Bin Liang, Ph.D., P.E.
Registered Civil Engineer

7/23/2013
Date

July 2013

Table of Contents

Acronyms ... iii
Location Hydraulic Study Form ... iv
Summary Floodplain Encroachment Report ... vii
1 General Description ... 1
1.1 Project Description ... 1
1.2 Regulatory Setting ... 3
1.2.1 Executive Order 11988 ... 3
1.2.2 California's National Flood Insurance Program ... 4
1.3 Design Standards ... 4
1.3.1 FEMA Standards ... 4
1.4 Description of Creek Crossings ... 5
1.5 Geographical References ... 5
1.6 Traffic ... 5
1.7 Traffic Interruptions for Base Flood (Q_{100}) ... 5
2 Hydrologic and Hydraulic Data ... 10
2.1 Floodplain Map ... 10
2.2 Design Discharges ... 12
2.3 Hydraulic Assessment ... 12
3 Project Evaluation ... 16
3.1 Risk Associated with Implementation of the Action ... 16
3.2 Impacts on Natural and Beneficial Floodplain Values ... 17
3.3 Support of Probable Incompatible Floodplain Development ... 17
3.4 Measures to Minimize Floodplain Impacts Associated with the Action ... 18
3.5 Measures to Restore and Preserve the Natural and Beneficial Floodplain Values Impacted by this Action ... 18
3.6 Practicability of Alternatives to any Significant Encroachments ... 18
3.7 Practicability of Alternatives to any Longitudinal Encroachments ... 19
3.8 Coordination with Local, State, and Federal Water Resources and Floodplain Management Agencies ... 19
4 References ... 20

Figures

Figure 1. Project Location Map ... 6
Figure 2. Project Vicinity Map ... 6
Figure 3. Project Aerial Photograph ... 7
Figure 4. Proposed Panoche Road Bridge Replacement Planning Study ... 8
Figure 5. Proposed Rock Weir Location ... 9
Figure 6. Tres Pinos Creek Floodplain at Existing Panoche Road Bridge Site ... 10
Figure 7. Proposed Bridge Alignment with Proposed 100-Year Flood-Prone Areas ... 11
Figure 8. 100-Year Water Surface Profile for Tres Pinos Creek ... 14
Figure 9. Upstream Face of Proposed Bridge ... 15

Tables

Table 1. Water Surface Elevations in the Vicinity of the Panoche Road Bridge 12

Photos

Photo 1. Panoche Road Bridge (Facing Westerly) 7

Appendices

Appendix A Federal Emergency Management Agency Flood Insurance Rate Maps

Acronyms

AASHTO	American Association of State Highway and Transportation Officials
ADT	average daily traffic
BIR	Bridge Inspection Report
BMP	Best Management Practices
BSA	Biological Study Area
Caltrans	California Department of Transportation
CEQA	California Environmental Quality Act
CFR	Code of Federal Regulations
CIP	cast-in-place
CRLF	California red-legged frog
CTS	California tiger salamander
FEMA	Federal Emergency Management Agency
FESA	Federal Endangered Species Act
FHWA	Federal Highway Administration
FIRM	Flood Insurance Rate Map
FIS	Flood Insurance Study
HBP	Highway Bridge Program
HEC-RAS	Hydrologic Engineering Center River Analysis System
I-5	Interstate 5
LBV	least Bell's vireo
NEPA	National Environmental Policy Act
NGVD 29	National Geodetic Vertical Datum of 1929
PS&E	Project Report, and final Plans, Specifications, and Estimates
SCCC	South Central California Coast
SR 25	State Route 25

LOCATION HYDRAULIC STUDY FORM *

Dist. 5 Co. San Benito Rte. Panoche Road P.M. N/A
Fed. Proj. Number BRLS-5943(056) Bridge No. 43C-0027

Floodplain Description:
The hydraulic analysis indicates that the 100-year flood will be below the soffit of the proposed bridge.

1. Description of Proposal (include any physical barriers i.e. concrete barriers, soundwalls, etc. and design elements to minimize floodplain impacts)

The project proposes to replace the existing bridge with a new longer and wider bridge on an improved roadway alignment. The proposed scope of work for this project includes bridge demolition, channel slope protection, approach roadway work, bridge construction, metal beam guard rails, bridge railing, temporary traffic control, right-of-way acquisition and temporary construction easements, utility relocation, and environmental mitigation. The total length of the project is approximately 685 feet, which includes approximately 550 feet of roadway work beyond the bridge abutments. The roadway work consists of realigning the roadway downstream (southerly) of the existing bridge. The proposed bridge will have two equal spans and will be approximately 132 feet long by 34 feet, 10 inches wide. The existing bridge structure has a hydraulic opening of approximately 61 feet and has two piers in the channel. The replacement bridge would have a hydraulic opening of approximately 92 feet with only one pier in the channel. The larger hydraulic opening in the proposed condition would allow for greater conveyance capacity, which would lower the water surface elevation and result in reduced backwater upstream of the bridge. A rock weir is proposed to be constructed approximately at the existing bridge location and transverse to the flow direction to maintain channel velocities and protect the upstream east bank.

2. ADT: Current (2010) 241 Projected (2029) 425

3. Hydraulic Data: Base Flood Q_{100}= 4,020 cfs
WSE_{100}= 1,800.4 feet NGVD 29 (existing bridge), 1,795.0 feet NGVD 29 (proposed bridge); see Section 2.3 of the Location Hydraulic Study Report for further discussions.
The flood of record, if greater than Q_{100}:
Q= N/A cfs WSE= N/A
Overtopping flood Q=8,800 cfs WSE= 1,800.7 feet NGVD 29
Are NFIP maps and studies available? YES x NO

4. Is the highway location alternative within a regulatory floodway?
YES NO x

5. Attach map with flood limits outlined showing all buildings or other improvements within the base floodplain.

Figure 5 of the Location Hydraulic Study Report shows the existing bridge and the 100-year floodplain. Figure 6 of the Location Hydraulic Study Report shows the proposed bridge improvements and the limits of the estimated 100-year flood limits that were delineated by WRECO based on the hydraulic modeling.

Potential Q_{100} backwater damages:

A.	Residences?	NO___x_____	YES_____
B.	Other Bldgs?	NO___x_____	YES_____
C.	Crops?	NO___x_____	YES_____
D.	Natural and beneficial floodplain values?	NO___x_____	YES_____

6. Type of Traffic:

A. Emergency supply or evacuation route?	NO_____	YES__x_____
B. Emergency vehicle access?	NO_____	YES__x_____
C. Practicable detour available?	NO___x_____	YES_____
D. School bus or mail route?	NO_____	YES __x_____

7. Estimated duration of traffic interruption for 100-year event hours:_____N/A___

8. Estimated value of Q_{100} flood damages (if any) – moderate risk level.

A.	Roadway	$_____N/A___
B	Property	$_____N/A___
	Total	$_____N/A___

9. Assessment of Level of Risk Low__x_____
Moderate_____
High_____

For High Risk projects, during design phase, additional Design Study Risk Analysis may be necessary to determine design alternative.

Signature – Hydraulic Engineer _____Date_____
(Item numbers 3,4,5,7,9)

Is there any longitudinal encroachment, significant encroachment, or any support of incompatible floodplain development? NO___x_____YES_____

If yes, provide evaluation and discussion of practicability of alternatives in accordance with 23 CFR 650.113

Information developed to comply with the Federal requirement for the Location Hydraulic Study shall be retained in the project files.

Signature – Project Engineer_____Date_____
(Item numbers 1,2,6,8)

** Same as Figure 804.7A Technical Information for Location Hydraulic Study located in Chapter 804 of the Highway Design Manual*

SUMMARY FLOODPLAIN ENCROACHMENT REPORT *

Dist. 5 Co. San Benito Rte. Panoche Road P.M. N/A
Federal Project No. BRLS-5943(056) Bridge No. 43C-0027
Limits: The limits of the work are the bridge and 550 feet of approach roadway. The total length of the project is approximately 685 feet.
Floodplain Description: The hydraulic analysis indicates that the 100-year flood will be below the soffit of the proposed bridge.

		No	Yes
1.	Is the proposed action a longitudinal encroachment of the base floodplain?	x	
2.	Are the risks associated with the implementation of the proposed action significant?	x	
3.	Will the proposed action support probable incompatible floodplain development?	x	
4.	Are there any significant impacts on natural and beneficial floodplain values?	x	
5.	Routine construction procedures are required to minimize impacts on the floodplain. Are there any special mitigation measures necessary to minimize impacts or restore and preserve natural and beneficial floodplain values? If yes, explain.	x	
6.	Does the proposed action constitute a significant floodplain encroachment as defined in 23 CFR, Section 650.105(q).	x	
7.	Are Location Hydraulic Studies that document the above answers on file? If not explain.		x

PREPARED BY:

_____ _____
Signature – Hydraulic Engineer Date

APPROVED BY:

_____ _____
Signature - Caltrans Environmental Branch Chief Date

_____ _____
Signature – District Local Assistance Engineer Date

** Same as Figure 804.7B Floodplain Evaluation Report Summary located in Chapter 804 of the Highway Design Manual*

1 GENERAL DESCRIPTION

1.1 Project Description

San Benito County (County) proposes to replace the existing Panoche Road bridge over Tres Pinos Creek (Bridge No. 43C-0027) with a new longer and wider bridge on an improved roadway alignment. The proposed bridge will replace the existing single-lane, 16-foot wide by 87-foot long bridge that was constructed in 1959. The existing alignment does not meet current American Association of State Highway and Transportation Officials (AASHTO) standards for design speed or road/bridge width. The site is located approximately 25 miles southeast of the City of Hollister and 15 miles southeast of State Route 25 (SR 25) along Panoche Road. Panoche Road is functionally classified as a Rural Major Collector with an average daily traffic (ADT) volume of approximately 150. The road runs roughly east west, connecting SR 25 and Interstate 5 (I-5). East of the project, the road condition degrades, and THE design speed hinders this from being a preferred alternate route to I-5. See Figure 1 for the Project Location Map and Figure 2 for the Project Vicinity Map.

The proposed replacement of the existing Panoche Road bridge over Tres Pinos Creek will heretofore be referred to as the Project.

The proposed scope of work for this Project includes bridge demolition, channel slope protection, approach roadway work, bridge construction, metal beam guard rails, bridge railing, temporary traffic control, right-of-way acquisition and temporary construction easements, utility relocation, and environmental mitigation. The California Department of Transportation (Caltrans), on behalf of the Federal Highway Administration (FHWA), is providing project oversight because federal funds are involved.

The proposed replacement bridge will provide two 12-foot traffic lanes with adjacent 4-foot paved shoulders on both sides. The total length of the project is approximately 685 feet, which includes approximately 550 feet of roadway work beyond the bridge abutments. The roadway work consists of realigning the roadway downstream (southerly) of the existing bridge to allow construction of the new bridge in one stage while maintaining traffic on the existing alignment during construction. The proposed shifted alignment also improves roadway geometry by eliminating the slight “S” curve over the existing bridge.

The proposed bridge will have two equal spans and will be approximately 132 feet long by 34 feet, 10 inches wide. A hydraulic analysis of the creek has been performed to determine the water surface elevation for establishing the approximate roadway/bridge profile. The new bridge will have over 3.5 feet of freeboard. The proposed bridge deck will be approximately 5 to 6 feet higher than the existing bridge deck. The proposed higher profile provides adequate freeboard for drift in the channel, and also limits the cut excavation into the hillside adjacent to the roadway.

Geotechnical explorations have been completed, and they include one boring near each proposed abutment location. The bridge site has good rock at relatively shallow depths for all three proposed support locations. The use of low impact hammers for rock excavation, as requested by the property owner, is expected to minimize potential impacts to the owner's natural spring located near the northeast corner of the bridge. The proposed bridge foundation will consist of shallow spread footings supported on rock. A reinforced concrete pier wall will provide intermediate support for the spans across the creek.

A stream diversion will be required during construction of the pier because water in this section of the creek flows generally year around, fed mostly by underground springs in the summer.

The structure type currently being considered is a cast-in-place (CIP) pre-stressed concrete slab with a structure depth of 2.0 feet. Bridge construction will require falsework in the channel spanning over the wetted creek area.

The existing bridge will be removed after construction of the new bridge is completed. One scour countermeasure being considered involves leaving either all or a portion of the existing east concrete abutment in place, depending on its condition after further examination. The west abutment will be removed and the bank will be re-graded to remove a portion of the artificial fill material that was placed during construction of the existing bridge.

There is an unnamed tributary that runs east to west, discharging into Tres Pinos Creek on the east bank adjacent to the existing bridge. The channel currently runs between the southern edge of Panoche Road and the toe of a steep hillside adjacent to the road, past the existing east bridge abutment and into the creek. Because the roadway alignment is shifting to the south, this channel will essentially be covered. A 5-foot diameter culvert and inlet structure will be provided to capture the tributary channel flows where the new roadway alignment starts to shift across into the tributary flow line. The most optimal hydraulic alignment is to terminate the end of the culvert through the new eastern bridge abutment wall and deposit water directly into the creek. This will maintain the general flow line of the tributary channel and keep the outlet of the culvert pointed in the general direction of the flow downstream as it enters the main creek. Further analysis has determined that outlet protection will be required where the culvert outfalls into Tres Pinos Creek. The proposed roadway/bridge profile has been established to allow vertical clearance for the 5-foot diameter pipe.

A natural spring exists near the northeast corner of the existing bridge and provides much of the water supply for the large ranch at the site. Engineering studies have been performed by the landowner identifying the soil layers and approximate extent of the spring. The landowner has a spring box and pump house located approximately 80 feet northwest of Panoche Road. It is believed that constructing the bridge downstream of the existing bridge (as proposed) will avoid impacts to the spring. Leaving the existing east

abutment in place after construction will be considered to avoid potential impacts to the spring.

A rock weir is proposed to be constructed approximately at the existing bridge location and transverse to the flow direction. The erosion of the soils at the east bank could have the potential to negatively affect the adjacent spring water box. Therefore, this weir is proposed to be constructed to maintain channel velocities and protect the upstream east bank. The size of the rock was determined to be ½ ton class rock by following criteria in *Fish Passage Design for Road Crossings* (Caltrans 2009). The voids between the rocks should be filled by injecting sand/fine gravel material or hand tamped void filler as described in the attached specification. Plants will grow in the filler placed in the voids between the ½ ton class rocks over time. Alternatively, native seed mix can be incorporated into the fill material, and willows can be planted at the weir base near the channel banks. This will help to decrease stream velocities as well as provide a more natural look, which is aesthetically pleasing and sustainable.

Quincy Engineering, Inc. is providing the engineering design, environmental clearance, a Project Report, and final Plans, Specifications, and Estimates (PS&E) for the roadway and bridge design for this project. The bridge replacement project is eligible for funding under the Federal Aid Highway Bridge Program (HBP). Environmental approvals (California Environmental Quality Act [CEQA] and National Environmental Policy Act [NEPA]) are currently being processed as well as right-of-way acquisition and utility relocation. Construction is expected to take place in 2013.

1.2 Regulatory Setting

1.2.1 Executive Order 11988

Executive Order 11988 (Floodplain Management) directs all federal agencies to avoid, to the extent possible, long- and short-term adverse impacts associated with the occupancy and modification of floodplains, and to avoid direct and indirect support of floodplain development wherever there is a practicable alternative. Requirements for compliance are outlined in Title 23, Code of Federal Regulations, Part 650, Subpart A (23 CFR 650A) titled “Location and Hydraulic Design of Encroachment on Floodplains.”

If the preferred alternative involves significant encroachment onto the floodplain, the final environmental document (final environmental impact statement or finding of no significant impact) must include:

- The reasons why the proposed action must be located in the floodplain;
- The alternatives considered and why they were not practicable; and
- A statement indicating whether the action conforms to applicable State or local floodplain protection standards.

1.2.2 California's National Flood Insurance Program

The Federal Emergency Management Agency (FEMA) is the nationwide administrator of the National Flood Insurance Program (NFIP), which is a program that was established by the National Flood Insurance Act of 1968 to protect lives and property, and to reduce the financial burden of providing disaster assistance. Under the NFIP, FEMA has the lead responsibility for flood hazard assessment and mitigation, and it offers federally backed flood insurance to homeowners, renters, and business owners in communities that choose to participate in the program. FEMA has adopted the 100-year floodplain as the base flood standard for the NFIP. FEMA is also concerned with construction that would be within a 500-year floodplain for proposed projects that are considered "critical actions," which are defined as any activities where even a slight chance of flooding is too great. FEMA issues the Flood Insurance Rate Maps (FIRMs) for communities that participate in the NFIP. These FIRMs present delineations of flood hazard zones.

In California, nearly all of the State's flood-prone communities participate in the NFIP, which is locally administered by the California Department of Water Resources' (DWR) Division of Flood Management. Under California's NFIP, communities have a mutual agreement with the State and Federal government to regulate floodplain development according to certain criteria and standards, which is further detailed in the NFIP. Typically, each county (or community) has a Flood Insurance Study (FIS), which is used to locally develop FIRMs and Base Flood Elevations (BFE).

The County's effective FIS, number 06069CV000A, was published April 16, 2009, and includes both unincorporated and incorporated areas. This FIS does not contain any detailed hydrologic or hydraulic information for Tres Pinos Creek.

1.3 Design Standards

1.3.1 FEMA Standards

FEMA standards are employed for design, construction, and regulation to reduce flood loss and to protect resources. Two types of standards are often employed: design criteria and performance standards.

A design criteria or specified standard dictates that a provision, practice, requirement, or limit be met; e.g. using the 1% flood and establishing floodway boundaries so as not to cause more than a 1-ft increase in flood stages.

A performance standard dictates that a goal is to be achieved, leaving it to the individual application as to how to achieve the goal; e.g. providing protection to the regulatory flood, keeping post-development stormwater runoff the same as pre-development, or maintaining the present quantity and quality of water in a wetland.

The 1% annual chance flood and floodplain have been adopted as a common design and regulatory standard in the United States. The NFIP adopted it in the early 1970s, and it was adopted as a standard for use by all federal agencies with the issuance of Executive

Order 11988. States or local agencies are free to impose a more stringent standard within their jurisdiction.

1.4 Description of Creek Crossings

The Project crosses over Tres Pinos Creek and an unnamed tributary. Tres Pinos Creek originates on the east-central edge of San Benito County. The watershed that drains to the site consists primarily of forests and grazing lands. The tributaries that contribute to the flows at the Project site include Sulphuritos Creek, Antelope Creek, Payne Creek, Willow Spring Creek, and several unnamed tributaries. Tres Pinos Creek drains into San Benito River downstream of the Project site in the southern part of the City of Hollister.

An aerial image of the Project site is shown in Figure 3, and a photo of the existing bridge is shown in Photo 1. In the photo, the unnamed tributary flows to the site from the left (south), and Tres Pinos Creek flows to the site from the right (north). The existing structure will be removed and replaced with a two-span bridge that is 132 feet long by 34 feet, 10 inches wide; see Figure 4. The location of the proposed rock weir is shown in Figure 5.

1.5 Geographical References

The Project references the National Geodetic Vertical Datum of 1929 (NGVD 29).

1.6 Traffic

The roadway work consists of realigning the roadway downstream (southerly) of the existing bridge to allow construction of the new bridge in one stage while maintaining traffic on the existing alignment during construction.

Panoche Road is functionally classified as a Rural Major Collector. According to Arman Nazemi, the Public Works Assistant Director of San Benito County, the current ADT in 2010 was 241 cars per day, and the future ADT is projected to be 425 cars per day in 2029 (Personal Communication).

1.7 Traffic Interruptions for Base Flood (Q_{100})

The proposed bridge will be designed to be above the 100-year base floodplain. Therefore, traffic interruptions at the proposed bridge are not anticipated.

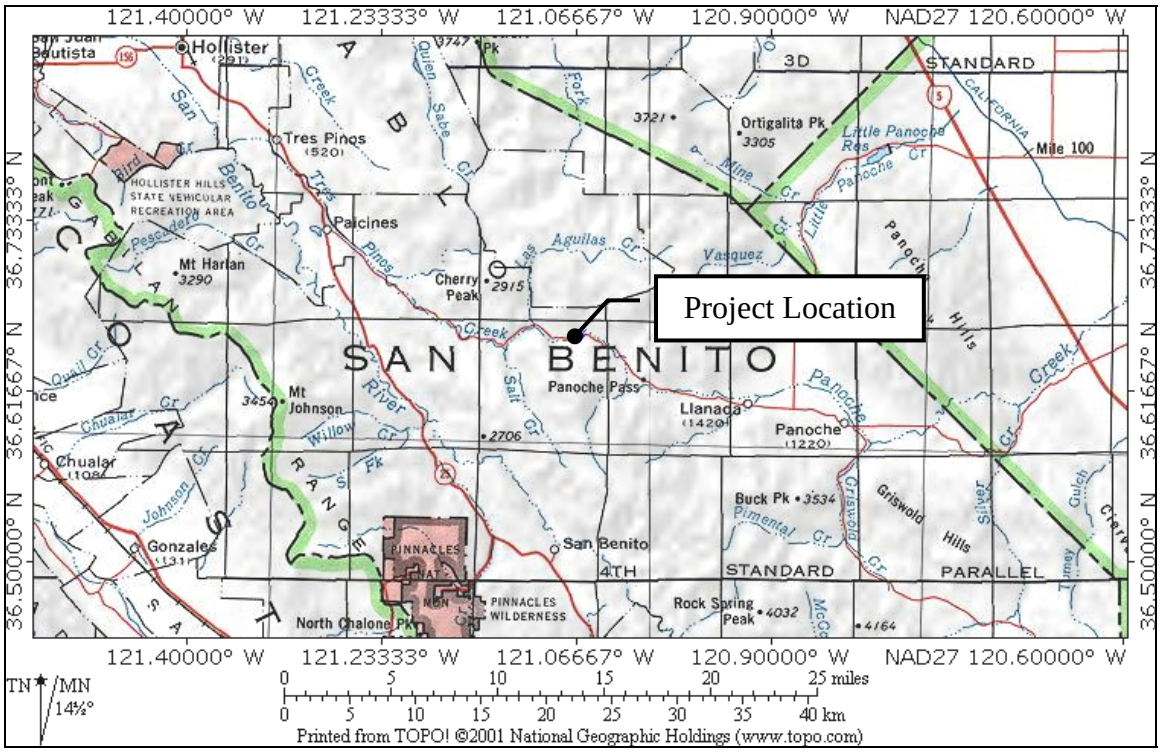

Figure 1. Project Location Map

Source: United States Geological Survey (USGS)

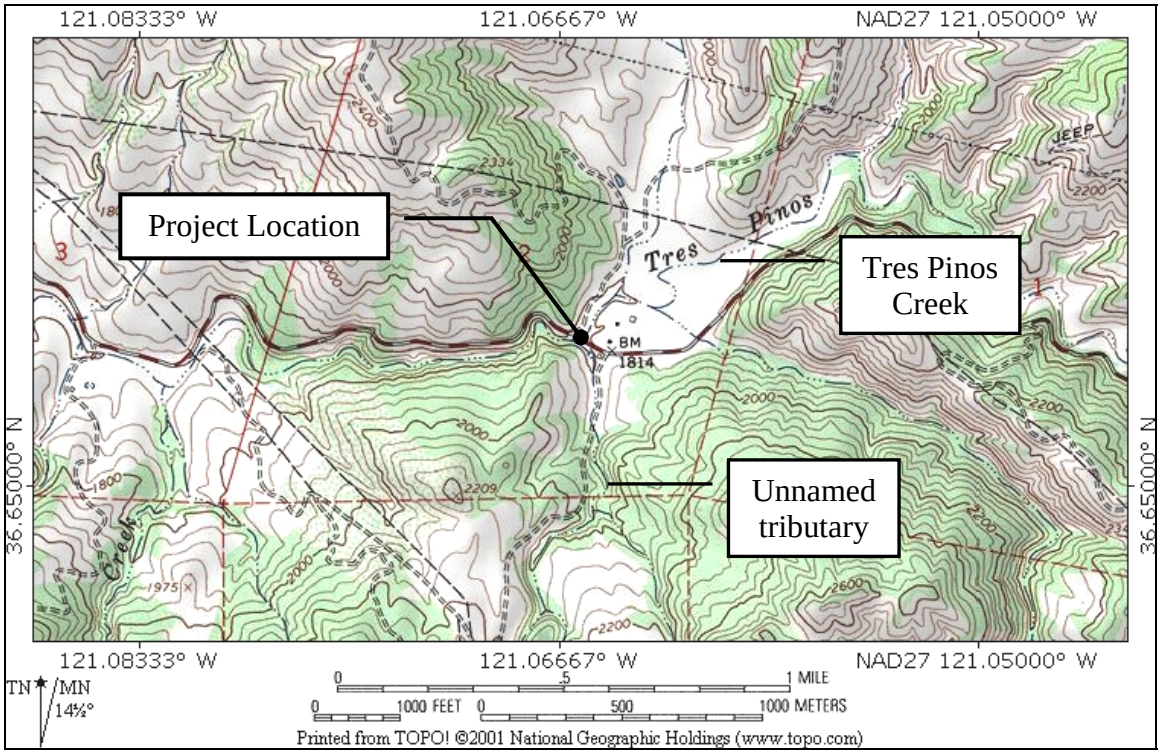

Figure 2. Project Vicinity Map

Source: USGS

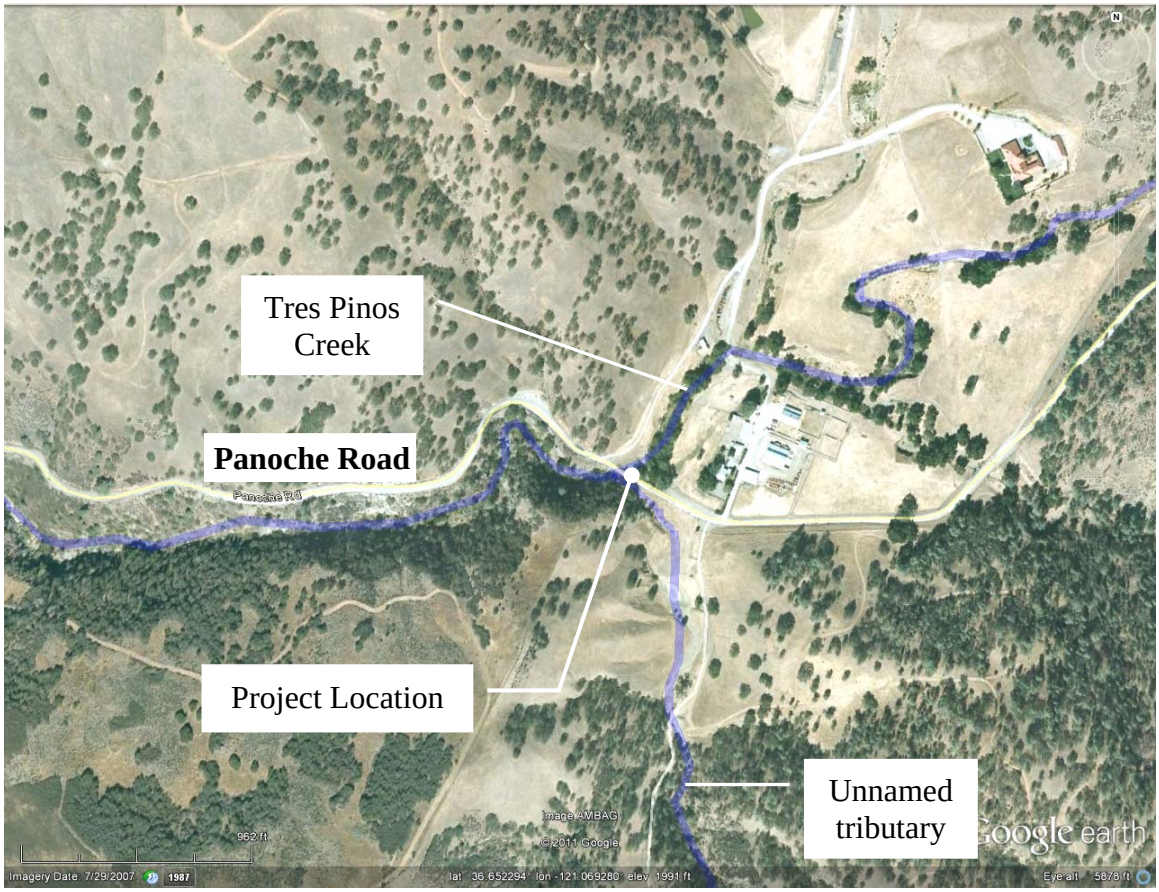

Figure 3. Project Aerial Photograph

Source: Google Earth

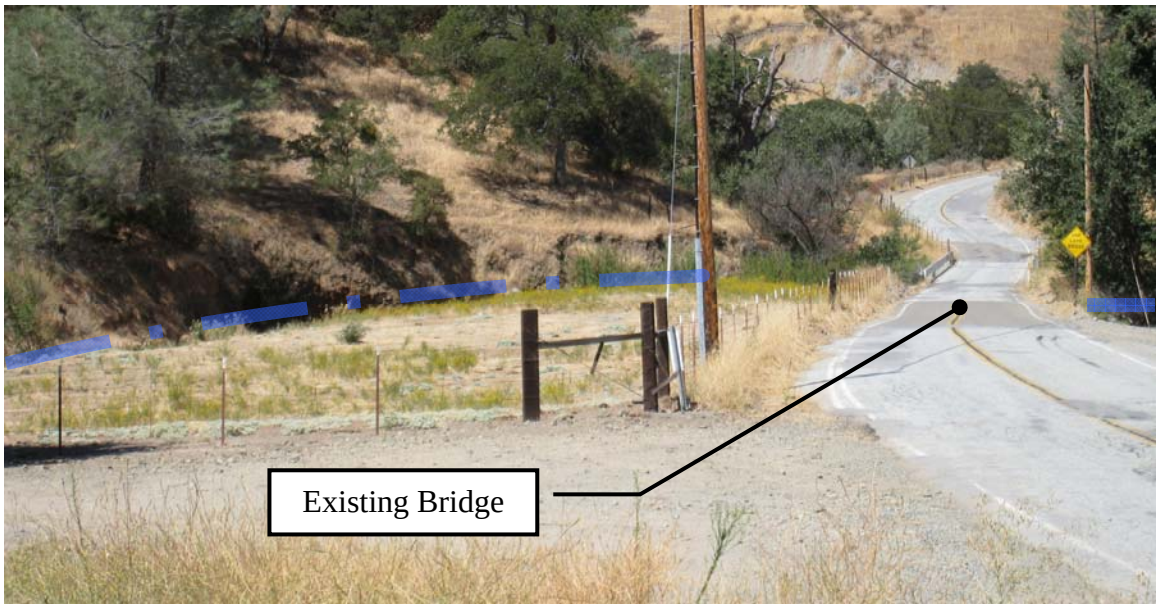

Photo 1. Panoche Road Bridge (Facing Westerly)

Source: Quincy Engineering, Inc.

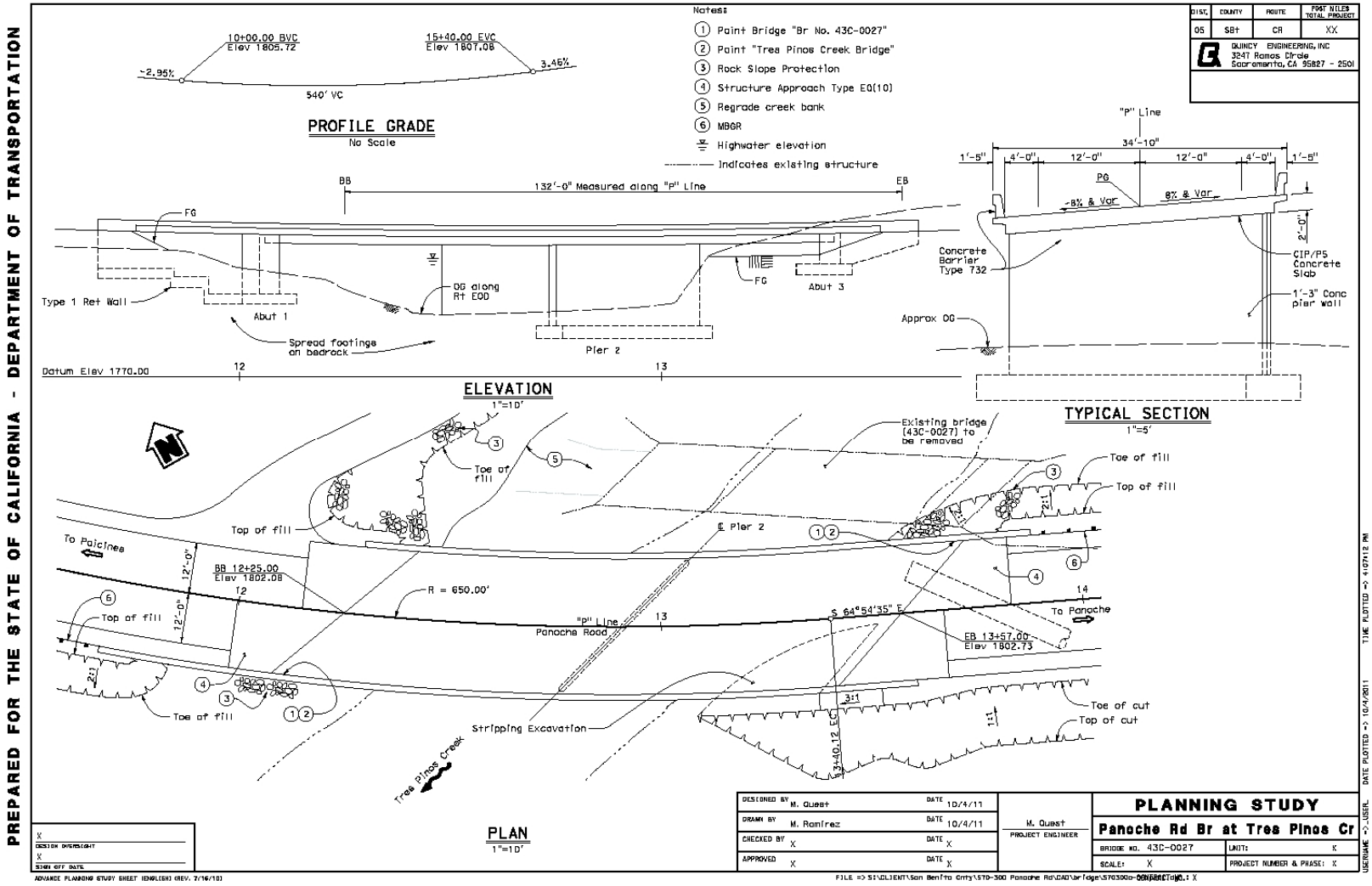

Figure 4. Proposed Panoche Road Bridge Replacement Planning Study

Source: Quincy Engineering, Inc.

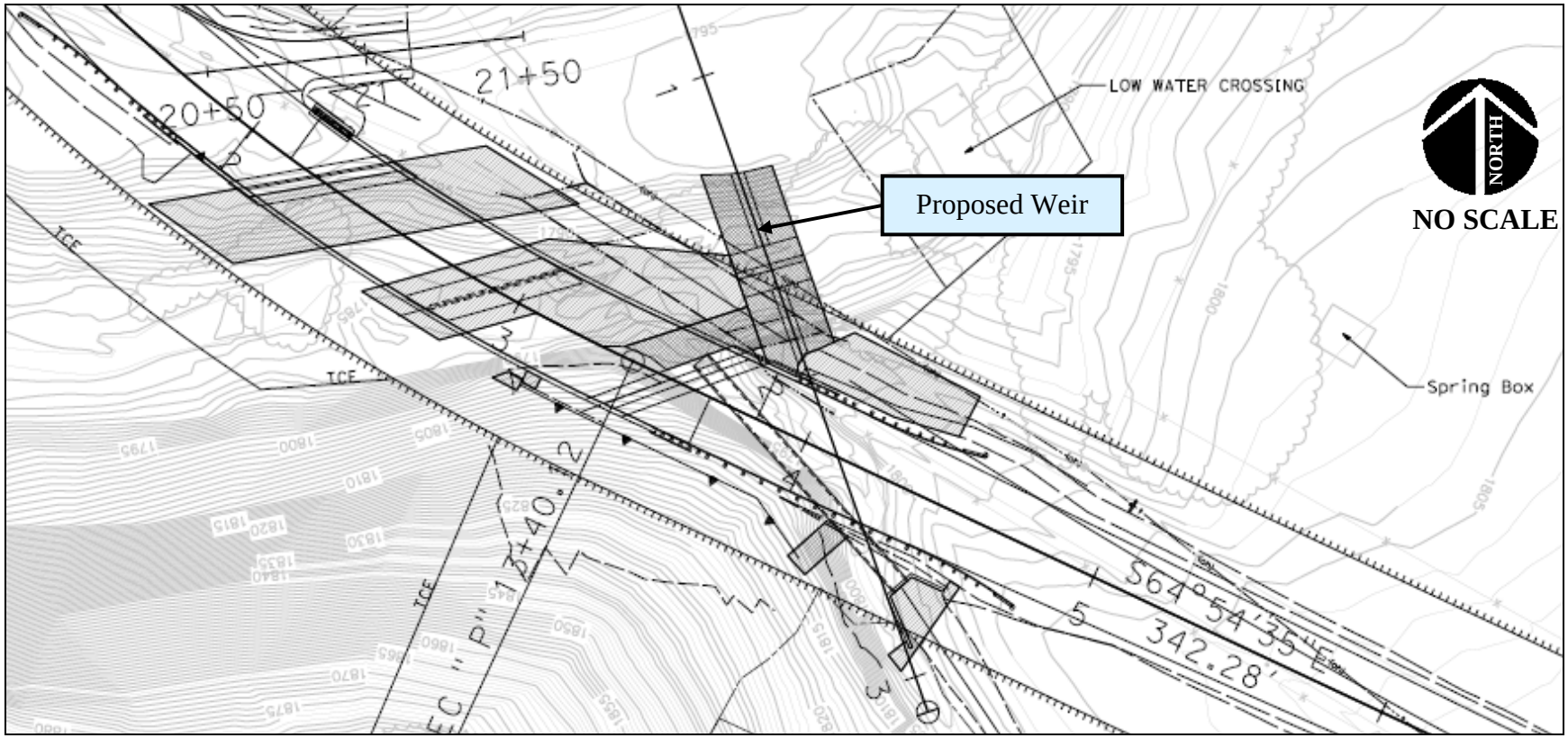

Figure 5. Proposed Rock Weir Location

Source: Quincy Engineering, Inc.

2 HYDROLOGIC AND HYDRAULIC DATA

2.1 Floodplain Map

Tres Pinos Creek was not studied using detailed methods by FEMA. Numerous flooding sources in San Benito County were studied by approximate methods by FEMA, and summarized in the FIS. Approximate analyses were used to study areas having a low development potential or minimal flood hazards.

Within the Project limits, the Panoche Road bridge location is within floodplains that have been defined by FEMA. The 100-year base floodplains are defined to be in flood hazard zone designation Zone A, which corresponds to the one percent (1%) annual chance floodplains that are mapped by approximate methods. Base flood elevations were not determined.

The FIRM that depicts this floodplain is Map Number 06069C0400D (FEMA 2009), and is shown in Figure 6. The proposed bridge alignment is shown in Figure 7 showing the areas that are potentially prone to the 100-year flood.

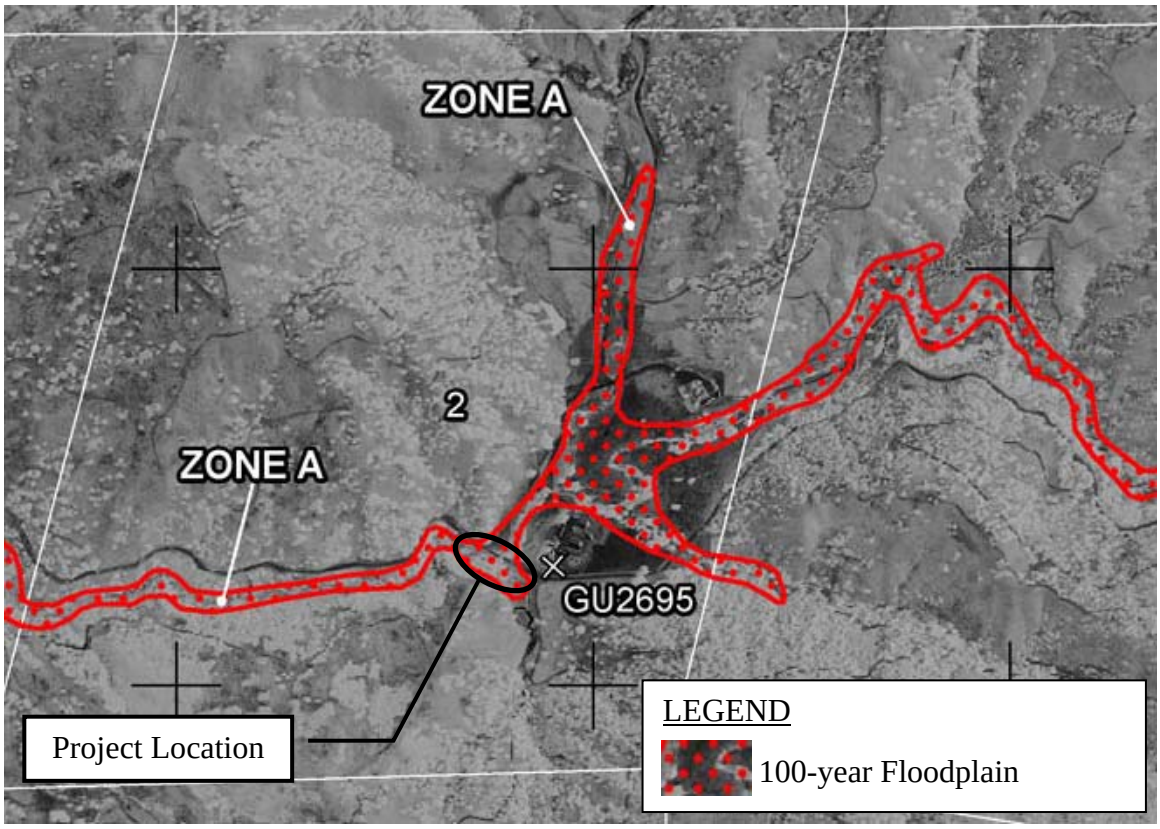

Figure 6. Tres Pinos Creek Floodplain at Existing Panoche Road Bridge Site

Source: FEMA

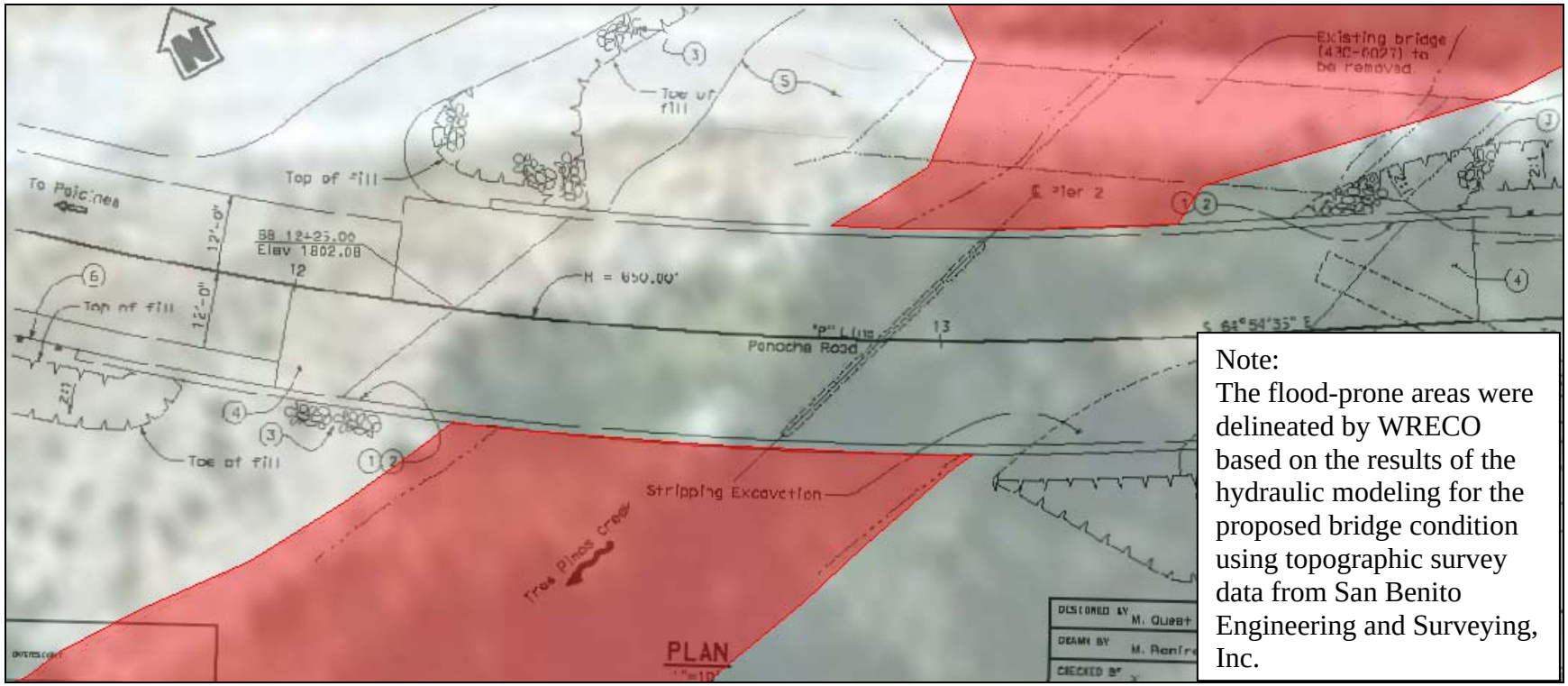

Figure 7. Proposed Bridge Alignment with Proposed 100-Year Flood-Prone Areas

Source: Quincy Engineering, Inc. (Proposed Bridge Plan), Google Earth (Background Aerial Image)

2.2 Design Discharges

Design discharges at the Project site were assessed using the USGS regional flood-frequency equations. The design discharges were verified with statistical analyses using gaging station records and applying a basin transfer to adjust the flows to the Project site. Three statistical distribution methods were used to estimate the flows: Log-Pearson Type III, generalized extreme value), and Wakeby.

The flows that were estimated using the USGS Regional Flood-Frequency Equations were more conservative and were adopted for this study.

The 100-year design discharge at the Project site was estimated to be:

- 4,020 cfs for Tres Pinos Creek
- 260 cfs for the unnamed tributary

The *Bridge Design Hydraulic Study Report* that was prepared for this Project by WRECO includes additional details regarding the hydrology at the Project site.

2.3 Hydraulic Assessment

The hydraulics at the Project site were evaluated using the Hydrologic Engineering Center River Analysis System (HEC-RAS) Version 4.1.0, which is hydraulic modeling software that was developed by the U.S. Army Corps of Engineers (USACE). The analyses were performed for the existing and proposed widening conditions for Panoche Road.

The results of the analysis indicated that the proposed replacement bridge would have the capacity to convey the 100-year design discharge. The existing bridge structure has a hydraulic opening of approximately 61 feet and has two piers in the channel. The replacement bridge would have a hydraulic opening of 92 feet with only one pier in the channel. The larger hydraulic opening in the proposed condition would allow for greater conveyance capacity, which would lower the water surface elevation and result in reduced backwater upstream of the bridge.

The water surface elevations upstream of the existing and proposed bridges are shown in Table 1. The two cross sections are shown to compare the water surface elevations at common locations, because the proposed bridge will be at a different alignment from the existing bridge.

Table 1. Water Surface Elevations in the Vicinity of the Panoche Road Bridge

River Station	Location	100-Year Water Surface Elevation (feet NGVD 29)	
		Existing Condition	Proposed Condition
1192	Upstream of the Existing Bridge	1,800.4	1,795.5
1137	Upstream of Proposed Bridge	1,796.9	1,795.0

The proposed bridge would result in reduced backwater and increased average channel velocities upstream of the bridge (relative to existing conditions). Increased channel velocities could negatively affect the soils on the east bank by increasing their erosive potential. The erosion of these soils could in turn have the potential to negatively affect the adjacent spring water box, which is used by the Wattis' ranch as a water source. Therefore, a rock weir was proposed to be constructed to more or less mimic the existing conditions. Different weir placements and dimensions were modeled to evaluate the hydraulic characteristics. The selected configuration is located near the existing bridge location and transverse to the flow direction. This location was selected through coordination with Quincy Engineering, Inc.

The 100-year water surface profile is shown in Figure 8, and the cross section at the upstream face of the proposed bridge is shown in Figure 9. The location of the weir was optimized such that it would not affect the hydraulics at the proposed bridge location. Further hydraulic discussions are detailed in the *Bridge Design Hydraulic Study Report* that was prepared for this Project by WRECO.

The lowest soffit elevation of the proposed bridge would be 1,798.7 feet NGVD 29, and the lowest soffit elevation of the existing bridge is 1,792.7 feet NGVD 29. The existing bridge currently does not meet the FHWA's freeboard criteria, while the proposed bridge would meet the FHWA's freeboard criteria of passing both the 100-year flood under the bridge and the 50-year flood with 2 feet of freeboard.

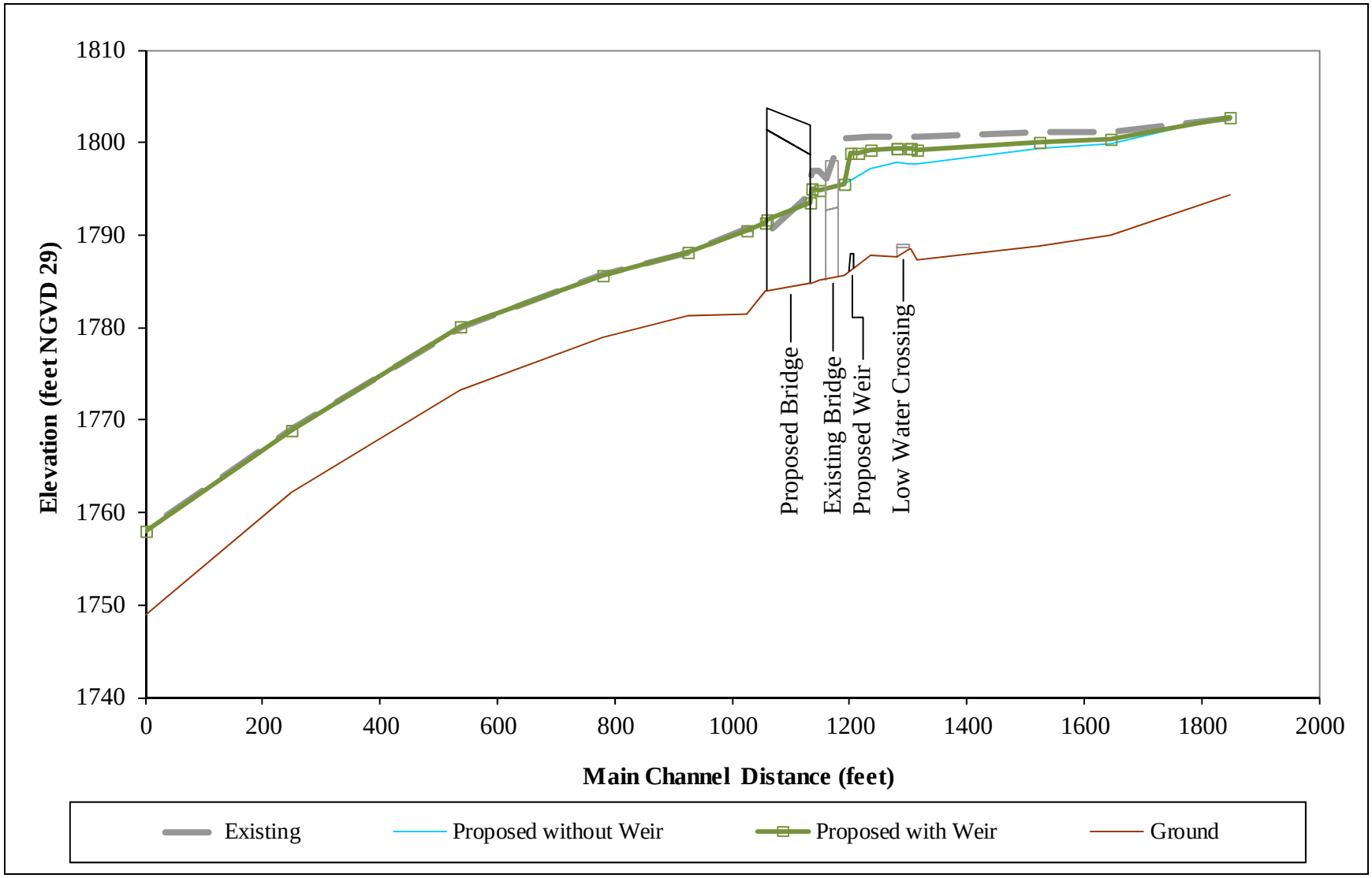

Figure 8. 100-Year Water Surface Profile for Tres Pinos Creek

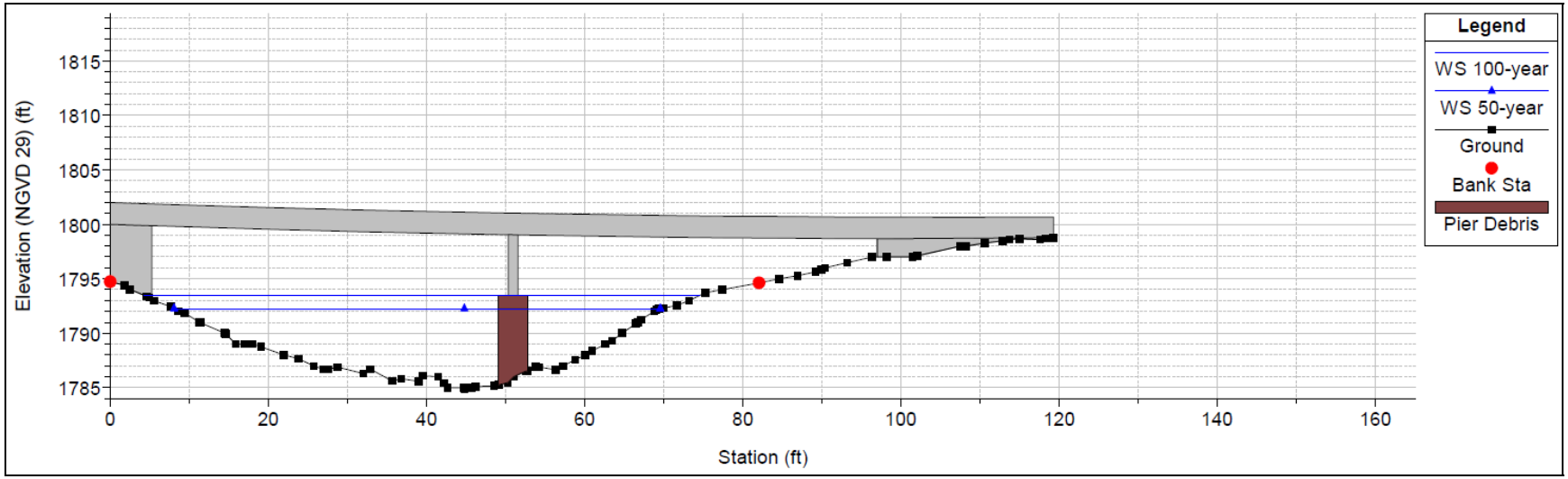

Figure 9. Upstream Face of Proposed Bridge

3 PROJECT EVALUATION

The existing Panoche Road bridge over Tres Pinos Creek does not meet the current standards for design speed or road/bridge width. The replacement bridge will be realigned downstream (southerly) of the existing bridge to improve the roadway geometry and maintain traffic on the existing alignment during construction.

Executive Order 11988 (Floodplain Management) directs all federal agencies to avoid, to the extent possible, long- and short-term adverse impacts associated with the occupancy and modification of floodplains, and to avoid direct and indirect support of floodplain development wherever there is a practicable alternative. Requirements for compliance are outlined in Title 23, Code of Federal Regulations, Part 650, Subpart A (23 CFR 650A) titled "Location and Hydraulic Design of Encroachment on Floodplains."

The impacts to the floodplains were evaluated by comparing the hydraulics from the existing condition model with the hydraulics from the proposed condition model; see Section 2.3.

3.1 Risk Associated with Implementation of the Action

As defined by the FHWA, risk shall mean the consequences associated with the probability of flooding attributable to an encroachment. It shall include the potential for property loss and hazard to life during the service life of the bridge and roadway.

The potential risk associated with the implementation of the proposed action includes but is not limited to: 1) change in land use, 2) change in impervious surface areas, 3) fill inside the floodplain, or 4) change in the 100-year water surface elevation.

The potential adverse effects to the floodplain for the proposed condition would be minimal.

- The Project does not propose to change the land uses within the Project limits.
- The proposed bridge would result in increases in impervious surface areas because the bridge will be wider than existing conditions. However, the added impervious surface areas would be insignificant when compared to the overall watershed of Tres Pinos Creek.
- There will be some fill in the floodplain due to the placement of the proposed bridge pier and abutments. Compared to the existing bridge, the proposed bridge will have fewer piers (one in the proposed condition vs. two in the existing condition) and the bridge deck will be above the 100-year base flood while the existing bridge deck is overtopped by the base flood.
- The potential floodplain impacts resulting from the removal of the existing bridge and the construction of the proposed replacement bridge were assessed. The

proposed bridge would not result in an increase in water surface elevation in the floodplains. The results of the hydraulic modeling indicated that with the proposed bridge, there is a decrease in water surface elevation when compared to the existing bridge (see Section 2.3).

Therefore, the overall level of risk associated with the Project is considered to be low.

3.2 Impacts on Natural and Beneficial Floodplain Values

Natural and beneficial floodplain values include, but are not limited to: fish, wildlife, plants, open space, natural beauty, scientific study, outdoor recreation, agriculture, aquaculture, forestry, natural moderation of floods, water quality maintenance, and ground water recharge.

Wetlands, waters, and habitats for sensitive species are anticipated to be impacted by the Project. The *Natural Environmental Study* prepared for the Project indicates that the Biological Study Area (BSA) defined for the Project consist of 4.43 ac. The natural lands in the BSA include the perennial Tres Pinos Creek, its associated willow riparian corridor, mixed oak woodland, California annual grassland, and pasture. Approximately 0.58 ac of annual grassland, arroyo willow riparian, and mixed oak woodland vegetation will be permanently impacted; temporary impacts to these same vegetation communities total approximately 1.11 ac. Special-status wildlife species that may occur in the BSA include Cooper's hawk, western burrowing owl, prairie falcon, least Bell's vireo (LBV), Pacific pond turtle, San Joaquin whipsnake, coast horned lizard, California tiger salamander (CTS), California red-legged frog (CRLF), and South Central California Coast steelhead (SCCC steelhead). Nesting birds are also likely to be present on or under the bridge or in vegetation within the BSA. Several of the species listed above are federally listed species under the Federal Endangered Species Act (FESA). The proposed Project may affect, but is not likely to adversely affect, CTS and LBV; both species are listed as threatened under FESA. The proposed Project may affect, and is likely to adversely affect, CRLF and SCCC steelhead; both species are listed as threatened under FESA. The Project will result in minor permanent and temporary impacts to riparian, wetland, and aquatic habitat.

The measures proposed to restore and preserve these natural and beneficial floodplain values are discussed in Section 3.5.

3.3 Support of Probable Incompatible Floodplain Development

As defined by the FHWA, the support of incompatible base floodplain development will encourage, allow, serve, or otherwise facilitate incompatible base floodplain development, such as commercial development or urban growth.

The purpose of the Project is to replace the bridge for improved roadway geometry. The replacement bridge will be designed to meet the FHWA freeboard criteria, and to meet current standards for design speed and road/bridge width. The proposed Project is not

intended to increase the capacity of the road, or encourage additional development in the Project area.

Therefore, the Project is not anticipated to support probable incompatible floodplain development.

3.4 Measures to Minimize Floodplain Impacts Associated with the Action

The design of the proposed bridge is such that floodplain impacts would be minimized. The proposed bridge was modeled to study the effects on the water surface elevations. The hydraulic modeling indicated that the proposed bridge would result in a lowering of water surface elevation.

There are no significant floodplain impacts associated with the Project. The impact that the proposed structure will have on base flood elevations will be negligible. Therefore, impacts to the floodplain are not anticipated. Because the Project impacts are minimal, no special measures would be required.

However, Best Management Practices (BMPs) should still be considered to minimize stormwater quality impacts. The implementation of these BMPs would help to reduce erosion, promote infiltration, and collect and treat roadway runoff.

3.5 Measures to Restore and Preserve the Natural and Beneficial Floodplain Values Impacted by this Action

Avoidance and minimization measures are proposed, including but not limited to standard BMPs, revegetation, implementing erosion control measures, implementing in-stream work windows, the installation and maintenance of Environmentally Sensitive Area fencing, restoration measures to pre-project conditions in temporary impact areas, or other requirements that are part of the Project's permit conditions. Project construction, including removal of the existing bridge and construction of the new bridge, is scheduled for June 1 to October 31, and will last for one season. Work within the live channel of Tres Pinos Creek will be limited to the period of July 15 through October 15. Permits or approvals may be required from the USACE, the California Department of Fish and Wildlife, and the Regional Water Quality Control Board.

3.6 Practicability of Alternatives to any Significant Encroachments

The FHWA defines a "significant encroachment" as a highway encroachment, and any direct support of likely base floodplain development, that would involve one or more of the following construction or flood-related impacts: 1) significant potential for interruption or termination of a transportation facility that is needed for emergency vehicles or provides a community's only evacuation route; 2) a significant risk; or 3) a significant adverse impact on the natural and beneficial floodplain values (1994).

Because this Project is not considered a significant encroachment, other alternatives were not evaluated.

3.7 Practicability of Alternatives to any Longitudinal Encroachments

As defined by the FHWA, a longitudinal encroachment is an action within the limits of the base floodplain that is longitudinal to the normal direction of the floodplain.

A longitudinal encroachment is "[a]n encroachment that is parallel to the direction of flow. Example: A highway that runs along the edge of a river is, usually considered a longitudinal encroachment." The requirement for consideration of avoidance alternatives must be included in a Location Hydraulic Study by including an evaluation and a discussion of the practicability of alternatives to any significant encroachment or any support of incompatible floodplain development.

The Project would be constructed roughly perpendicular to the direction of the flow of Tres Pinos Creek. Longitudinal encroachments due to the Project are not anticipated. Therefore, special alternatives to address longitudinal encroachment were not considered.

3.8 Coordination with Local, State, and Federal Water Resources and Floodplain Management Agencies

A floodplain map revision is not anticipated due to the negligible changes in water surface elevation resulting from the Project. Therefore, a Letter of Map Revision is not anticipated. Regulatory permits and approvals, as mentioned in Section 3.5, would be required as the Project enters into the final design phase.

4 REFERENCES

Google Earth. (2011). (Last accessed: December 7, 2011).

Federal Emergency Management Agency. (2009). *Flood Insurance Rate Map* for San Benito County, California and Incorporated Areas. Map Number 06069C0400D. Panel 400 of 955.

Federal Emergency Management Agency. (2009). *Flood Insurance Study* for San Benito County, California and Incorporated Areas. Flood Insurance study Number 06069CV000A.

United States Army Corps of Engineers - Hydrologic Engineering Center. (2010). River Analysis System. HEC-RAS. (Version 4.1.0) [Computer software]. January 2010. Available from: http://www.hec.usace.army.mil/software/hec-ras/hecras-download.html.

Quincy Engineering, Inc. (2011). Panoche Rd Br at Tres Pinos Cr – Planning Study. Bridge No. 43C-0027.

LSA Associates, Inc. (2013). Natural Environmental Study. Panoche Road Bridge (No. 43C0027) Replacement at Tres Pinos Creek, San Benito County, California 05-SBT-0-CR.

San Benito Engineering and Surveying, Inc. (2011). Topographic survey. May 2011.

United States Geological Survey. (2001). *California: Seamless USGS Topographic Maps (CDROM, Version 2.6.8, 2001, Part Number: 113-100-004*). National Geographic Holdings, Inc.

WRECO. (2013). *Bridge Design Hydraulic Study Report:* Panoche Road at Tres Pinos Creek Bridge Replacement Project. San Benito County, California. Bridge No. 43C-0027.

Appendix A Federal Emergency Management Agency Flood Insurance Rate Maps

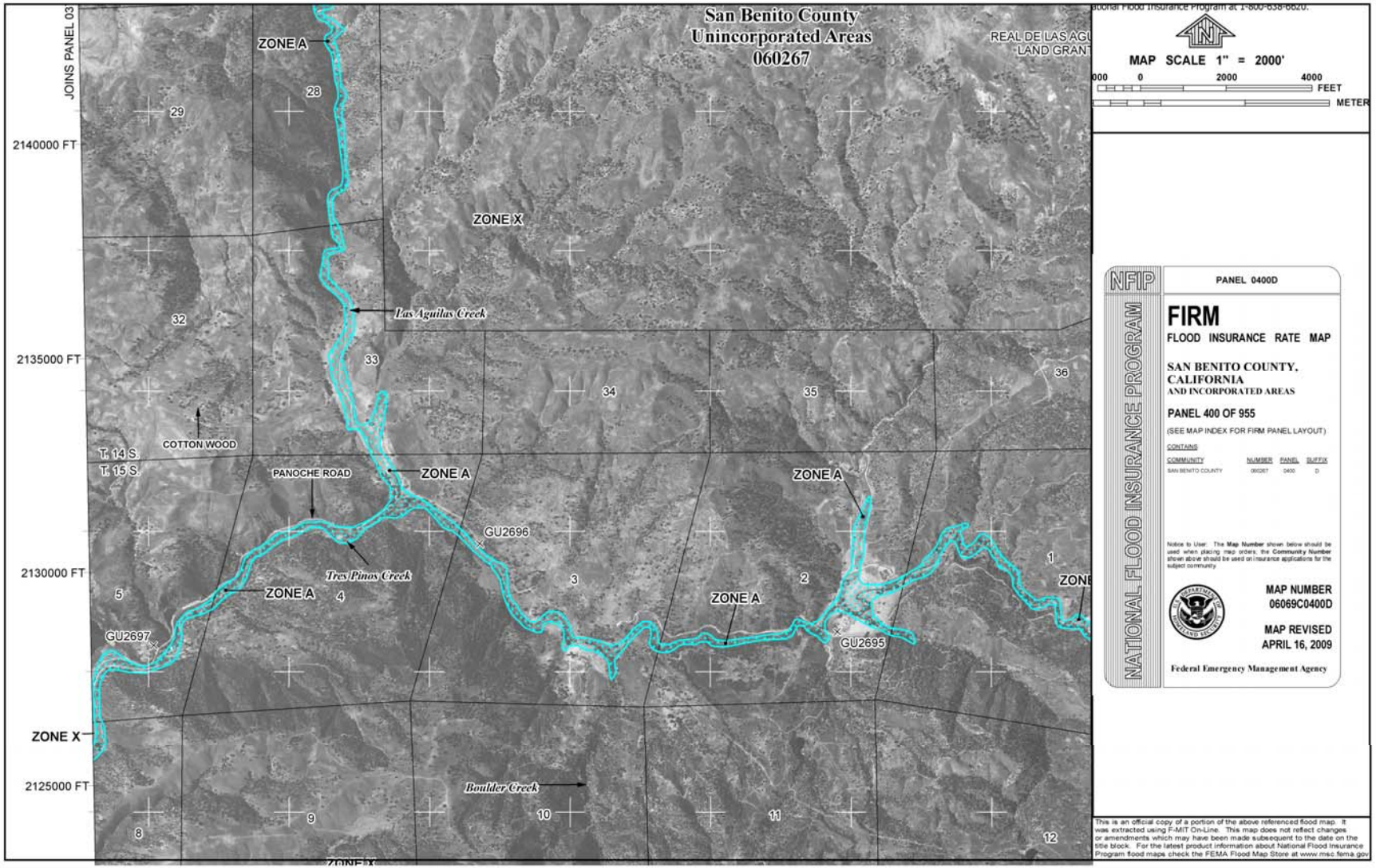
San Benito County
Unincorporated Areas
060267
JOINS PANEL 03
ZONE A
ZONE X
Las Aguilas Creek
COTTON WOOD
T. 14 S.
T. 15 S.
PANOCHE ROAD
Tres Pinos Creek
GU2696
GU2697
GU2695
Boulder Creek
2140000 FT
2135000 FT
2130000 FT
2125000 FT
MAP SCALE 1" = 2000'
FEET
METER
PANEL 0400D
FIRM
FLOOD INSURANCE RATE MAP
SAN BENITO COUNTY, CALIFORNIA
AND INCORPORATED AREAS
PANEL 400 OF 955
(SEE MAP INDEX FOR FIRM PANEL LAYOUT)
NATIONAL FLOOD INSURANCE PROGRAM
MAP NUMBER
06069C0400D
MAP REVISED
APRIL 16, 2009
Federal Emergency Management Agency

1243 Alpine Road, Suite 108
Walnut Creek, CA 94596
Phone: 925.941.0017
Fax: 925.941.0018
www.wreco.com

Memorandum

Date: **October 8, 2021**

To: **Carolyn Davis – Quincy Engineering, Inc.**

From: **Han-Bin Liang and Wana Chiu – HDR|WRECO**

Project: **Panoche Road at Tres Pinos Creek Bridge Replacement Project**
San Benito County, California
Federal Aid Project Number: BRLS-5943(056); San Benito County Project Number: 698; Existing Bridge No. 43C0027

Subject: **Supplemental Location Hydraulic Study**

Introduction

The purpose of this *Memorandum* is to supplement the *Location Hydraulic Study Report* (WRECO, 2013) for the Panoche Road at Tres Pinos Creek Bridge Replacement Project (Project). The hydraulic analysis was revised to address comments from the California Department of Transportation (Caltrans) and resource agencies, which resulted in revised rock slope protection (RSP) in the area upstream (north) of the proposed bridge.

Hydraulic Analysis

The hydraulic assessment was performed using the Hydrologic Engineering Center River Analysis System (HEC-RAS) Version 5.0.7 (United States Army Corps of Engineers [USACE], 2019). Mounded RSP was modeled at River Stations (RS) 1525 and 1316 by modifying the cross sectional geometry. Based on the results of the previous hydraulic analysis, the proposed bridge resulted in reduced backwater effects upstream of the bridge, or a lowering of water surface elevations relative to the existing condition. Based on the results of the updated hydraulic analysis of the proposed bridge with the mounded RSP, there would also be reduced backwater effects upstream of the bridge, or a lowering of water surface elevations, relative to the existing condition (see Figure 1).

1243 Alpine Road, Suite 108
Walnut Creek, CA 94596
Phone: 925.941.0017
Fax: 925.941.0018
www.wreco.com

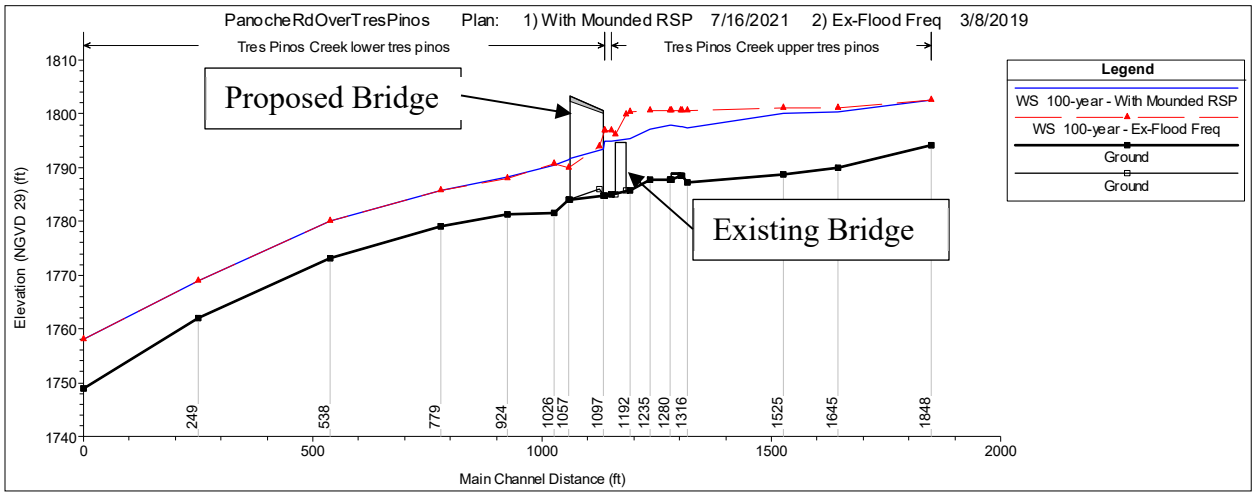

Figure 1. 100-year Water Surface Profile Comparison

The hydraulic model indicates that the existing bridge is overtopped during the 100-year flow, and the proposed bridge would clear the 100-year flow (see Figure 2 for the existing bridge cross section and Figure 3 for the proposed bridge cross section).

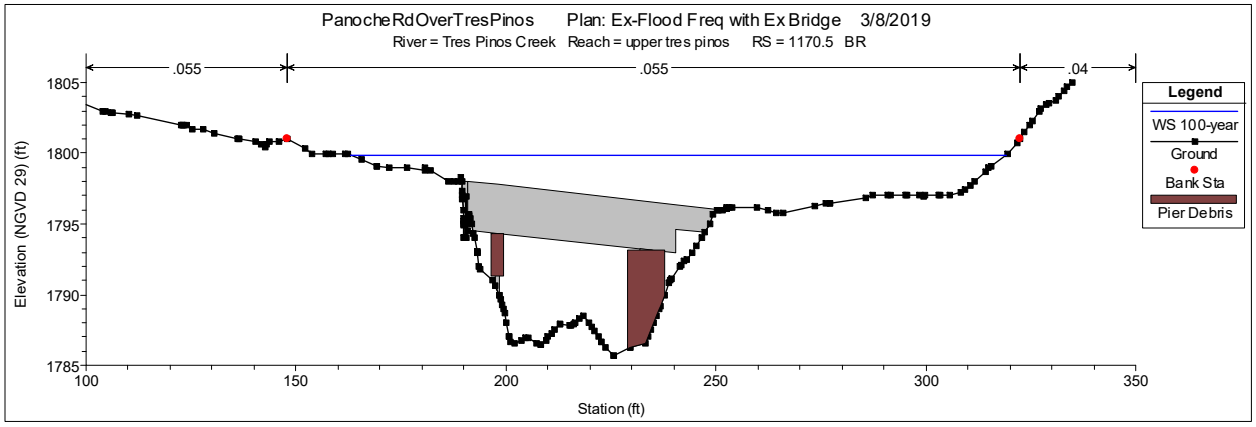

Figure 2. Existing Bridge Cross Section (Facing Downstream/Southwest)

1243 Alpine Road, Suite 108
Walnut Creek, CA 94596
Phone: 925.941.0017
Fax: 925.941.0018
www.wreco.com

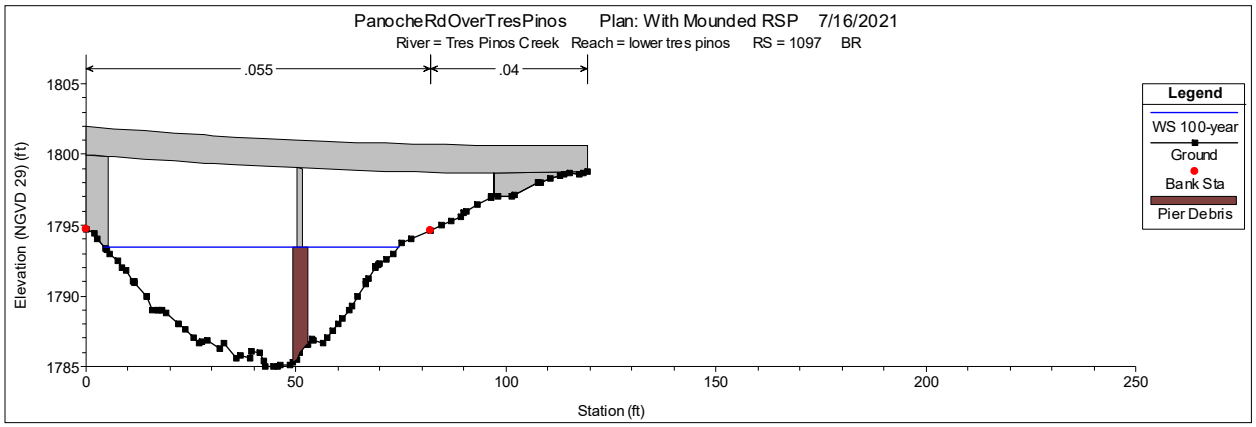

Figure 3. Proposed Bridge Cross Section (Facing Downstream/Southwest)

Project Evaluation

Based on the hydraulic analysis, the Project Evaluation from the *Location Hydraulic Study Report* (WRECO, 2013) is unchanged. The updated Technical Information for Location Hydraulic Study and Floodplain Evaluation Report Summary are included in the appendix.

References

WRECO. (2013). *Location Hydraulic Study Report*. Panoche Road at Tres Pinos Creek Bridge Bridge Replacement Project.

United States Army Corps of Engineers - Hydrologic Engineering Center. (2019). River Analysis System. HEC-RAS. (Version 5.0.7) [Computer software]. March 2019. Available from: <https://www.hec.usace.army.mil/software/hec-ras/download.aspx>

Appendices

- Technical Information for Location Hydraulic Study
- Floodplain Evaluation Report Summary

TECHNICAL INFORMATION FOR LOCATION HYDRAULIC STUDY

Dist. 5 Co. San Benito Rte. Panoche Road Project ID N/A
Federal-Aid Project Number: BRLS-5943(056)

Floodplain Description:
The Project is located within a Zone A floodplain, which is an area that is subject to inundation by a 1%-annual-chance floodplain. These areas are mapped by approximate methods.

1. Description of Proposal *(include any physical barriers i.e. concrete barriers, sound walls, etc. and design elements to minimize floodplain impacts)*
The project proposes to replace the existing bridge with a new longer and wider bridge on an improved roadway alignment. The proposed scope of work for this project includes bridge demolition, channel slope protection, approach roadway work, bridge construction, metal beam guard rails, bridge railing, temporary traffic control, right-of-way acquisition and temporary construction easements, utility relocation, and environmental mitigation. The total length of the project is approximately 685 feet, which includes approximately 550 feet of roadway work beyond the bridge abutments. The roadway work consists of realigning the roadway downstream (southerly) of the existing bridge. The proposed bridge will have two equal spans and will be approximately 132 feet long by 34 feet, 10 inches wide. The existing bridge structure has a hydraulic opening of approximately 61 feet and has two piers in the channel. The replacement bridge would have a hydraulic opening of approximately 92 feet with only one pier in the channel. The larger hydraulic opening in the proposed condition would allow for greater conveyance capacity, which would lower the water surface elevation and result in reduced backwater upstream of the bridge. Rock slope protection is also included upstream of the bridge to protect the upstream east bank.

2. ADT: Current 800 (2010) Projected 1,024 (2036)

3. Hydraulic Data: Base Flood Q100= 4,020 CFS
WSE100= 1,796.9 ft NGVD 29 (existing); 1,795.0 ft NGVD 29 (proposed) *The flood of record, if greater than Q100:*
Q= N/A CFS WSE= N/A
Overtopping flood Q= N/A CFS WSE= N/A

Are NFIP maps and studies available? NO ____ YES ✓

4. Is the highway location alternative within a regulatory floodway?
NO ✓ YES ____

5. Attach map with flood limits outlined showing all buildings or other improvements within the base floodplain.

Potential Q100 backwater damages:

A.	Residences?	NO ✓	YES ____
B.	Other Bldgs?	NO ✓	YES ____
C.	Crops?	NO ✓	YES ____
D.	Natural and beneficial Floodplain values?	NO ✓	YES ____

"Natural and beneficial flood-plain values" shall include but are not limited to fish, wildlife, plants, open space, natural beauty, scientific study, outdoor recreation, agriculture, aquaculture, forestry, natural moderation of floods, water quality maintenance, and groundwater recharge.

6. Type of Traffic:

A. Emergency supply or evacuation route?	NO ____	YES ✓
B. Emergency vehicle access?	NO ____	YES ✓
C. Practicable detour available?	NO ✓	YES ____
D. School bus or mail route?	NO ____	YES ✓

7. Estimated duration of traffic interruption for 100-year event hours: N/A

TECHNICAL INFORMATION FOR LOCATION HYDRAULIC STUDY cont.

Dist.___5____ Co._San Benito_____ Rte._Panoche Road_____ P.M._____N/A_____
Federal-Aid Project Number:____BRLS-5943(056)_____
Project ID__N/A_____Bridge No.__43C0027_____

8. Estimated value of Q100 flood damages (if any) – moderate risk level.

A.	Roadway	$____N/A___
B	Property	$____N/A___
	Total	$____N/A___

9. Assessment of Level of Risk

Low___✓_____
Moderate_____
High_____

For High Risk projects, during design phase, additional Design Study Risk Analysis may be necessary to determine design alternative.

PREPARED BY:

Signature:
I certify that I have conducted a Location Hydraulic Study consistent with 23 CFR 650 and that the information summarized in items numbers 3, 4, 5, 7, and 9 of this form is accurate.

_____ *Date* _____
District Hydraulic Engineer *(capital and 'on' system projects)*

_____ *Date* _____
Local Agency/Consulting Hydraulic Engineer *(local assistance projects)*

Is there any longitudinal encroachment, significant encroachment, or any support of incompatible Floodplain development? NO___✓____YES_____

If yes, provide evaluation and discussion of practicability of alternatives in accordance with 23 CFR 650.113

Information developed to comply with the Federal requirement for the Location Hydraulic Study shall be retained in the project files.

I certify that item numbers 1, 2, 6 and 8 of this Location Hydraulic Study Form are accurate and will ensure that Final PS&E reflects the information and recommendations of said report:

_____ *Date* _____
District Project Engineer *(capital and 'on' system projects)*

_____ *Date* _____
Local Agency Project Engineer *(local assistance projects)*

CONCURRED BY:
I have reviewed the quality and adequacy of the floodplain submittal consistent with the attached checklist, and concur that the submittal is adequate to meet the mandates of 23 CFR 650.

_____ *Date* _____
District Project Manager *(capital and 'on' system projects)*

_____ *Date* _____
Local Agency Project Manager *(Local Assistance projects)*

TECHNICAL INFORMATION FOR LOCATION HYDRAULIC STUDY cont.

Dist.___5____ Co._San Benito_____ Rte._Panoche Road_____ P.M._____N/A_____
Federal-Aid Project Number:____BRLS-5943(056)_____
Project ID__N/A_____Bridge No.__43C0027_____

_____ *Date* _____
District Local Assistance Engineer *(or District Hydraulic Branch for very complex projects or when required expertise is unavailable. Note: District Hydraulic Branch review of local assistance projects shall be based on reasonableness and concurrence with the information provided).*

I concur that the natural and beneficial floodplain values are consistent with the results of other studies prepared pursuant to 23 CFR 771, and that the NEPA document or determination includes environmental mitigation consistent with the Floodplain analysis.

_____ *Date* _____
District Senior Environmental Planner *(or Designee)*

Note: If a significant floodplain encroachment is identified as a result of floodplains studies, FHWA will need to approve the encroachment and concur in the Only Practicable Alternative Finding.

FLOODPLAIN EVALUATION REPORT SUMMARY

Dist. 5 Co. San Benito Rte. Panoche Road K.P. N/A
Federal-Aid Project Number *(Local Assistance)* BRLS-5943(056)
Project No.: 698 Bridge No. 43C0027
Limits: The limits of the Project work are at the bridge and 550 ft of approach roadway. The total length of the Project is approximately 685 ft.

Floodplain Description: The Project is located within a Zone A floodplain, which is an area that is subject to inundation by a 1%-annual-chance floodplain. These areas are mapped by approximate methods.

		No	Yes
1.	Is the proposed action a longitudinal encroachment of the base floodplain?	✓	
2.	Are the risks associated with the implementation of the proposed action significant?	✓	
3.	Will the proposed action support probable incompatible floodplain development?	✓	
4.	Are there any significant impacts on natural and beneficial floodplain values?	✓	
5.	Routine construction procedures are required to minimize impacts on the floodplain. Are there any special mitigation measures necessary to minimize impacts or restore and preserve natural and beneficial floodplain values? If yes, explain.	✓	
6.	Does the proposed action constitute a significant floodplain encroachment as defined in 23 CFR, Section 650.105(q).	✓	
7.	Are Location Hydraulic Studies that document the above answers on file? If not explain.		✓

PREPARED BY:

_____ *Date* _____
District Project Engineer *(capital and 'on' system projects)*

_____ *Date* _____
Local Agency/Consulting Hydraulic Engineer *(local assistance projects)*

CONCURRED BY:

_____ *Date* _____
District Project Manager *(capital and 'on' system projects)*

_____ *Date* _____
District Local Assistance Engineer *(Local Assistance projects)*

I concur that impacts to natural and beneficial floodplain values are consistent with the results of other studies prepared pursuant to 23 CFR 771, and that the NEPA document or determination includes environmental mitigation consistent with the Floodplain analysis.

_____ *Date* _____
District Senior Environmental Planner *(or Designee)*

Note: If a significant floodplain encroachment is identified as a result of floodplains studies, FHWA will need to approve the encroachment and concur in the Only Practicable Alternative Finding.

APPENDIX F

TECHNICAL NOISE MEMORANDUM

This page intentionally left blank

TECHNICAL NOISE MEMORANDUM

PANOCHE ROAD BRIDGE REPLACEMENT PROJECT RESTART

SAN BENITO COUNTY, CALIFORNIA

BRLSZ-5938(176)

PREPARED BY:

CHRIS GRAHAM
SENIOR ENVIRONMENTAL PLANNER
LSA
201 CREEKSIDE RIDGE COURT #250
ROSEVILLE, CALIFORNIA 95678

FOR:

KELSO VIDAL
ENVIRONMENTAL PLANNER
CALTRANS D5: ENVIRONMENTAL STEWARDSHIP BRANCH

February 2021

INTRODUCTION

San Benito County, with funding administered through the Federal Highway Administration, and in coordination with the California Department of Transportation (Caltrans), proposes to replace the Panoche Road Bridge (43C-0027) over Tres Pinos Creek with a longer and wider bridge.

The proposed Project is located in a rural portion of San Benito County along Panoche Road approximately 9.5 miles east of Airline Highway and approximately 25 miles west of Interstate 5. The Project site is located on one privately owned parcel, APN 0271500030, and San Benito County has a prescriptive easement for Panoche Road through the parcel. **Figure 1: Regional Location** and **Figure 2: Project Vicinity and Sensitive Receptor Location** shows the location of the proposed Project on a regional and local basis (and sensitive receptor), respectively. The majority of the land surrounding the site is vacant of development and is in a natural, vegetated state. A portion of the parcel is occupied by a single-family residential unit, ancillary ranch style storage buildings, and a pump house located on a natural spring, adjacent to Tres Pinos Creek.

The Project is needed as the existing bridge does not meet current design standards for speed or width. The purpose of the Project is to:

- Provide long-term safe vehicular access across Tres Pinos Creek.
- Comply with County, Caltrans, and American Association of State Highway and Transportation Officials design standards for design and construction of the approach roadways and replacement bridge.
- Additional objectives include avoiding or minimizing environmental impacts, reducing right-0f-way and land use impacts, meeting average daily traffic (ADT) requirements, and protecting against bank erosion.

PROJECT ALTERNATIVES

The environmental documentation for the proposed Project evaluates one Build Alternative. A No Project/No Build Alternative is also evaluated as required by the California Environmental Quality Act (CEQA) and the National Environmental Policy Act (NEPA).

No Build Alternative

In the No Build Alternative, no improvements to Panoche Road Bridge would be implemented. Panoche Road Bridge would remain in its current state and thus would continue to not meet current design standards for speed or width.

Build Alternative (Proposed Project)

The Build Alternative would include bridge replacement and roadway approach modification as well as existing bridge demolition.

Actions associated with the proposed Project includes the following: existing bridge demolition; channel rock slope protection (RSP) in Tres Pinos Creek; new bridge construction; approach roadway work; metal beam guard rail installation; bridge railing installation; various construction activities;

temporary traffic control during construction activities; right-of-way acquisition and temporary construction easement acquisition; and, utility relocation. The total length of the proposed Project will be approximately 685 feet, which includes approximately 550 feet of roadway work beyond the bridge abutments. The Project area will total approximately 3.2 acres.

The new bridge will be approximately 132 feet long with two equal spans, by approximately 35 feet wide (two 12-foot wide lanes with adjacent 4-foot wide paved shoulders on each side). A shorter length alternative crash cushion system will be installed at the northwest corner of the new bridge to maintain access to a residential gated driveway located adjacent to the Project boundary. A stream diversion will be implemented during construction of the bridge pier, as water in this section of Tres Pinos Creek generally flows year-round, fed mostly by underground springs in the summer months. The new bridge type is a cast-in-place (CIP) pre-stressed concrete slab with a structure depth of 2 feet. Bridge construction will require falsework in the Tres Pinos Creek channel spanning over the wetted creek area.

Roadway work would consist of realigning the roadway downstream (southerly) of the existing bridge to allow construction of the new bridge in one stage while maintaining traffic flow on the existing alignment during construction. The proposed shifted roadway alignment would improve roadway geometry by eliminating the slight “S” curve over the existing bridge.

Demolition of the existing bridge will require construction of a temporary decking or other system over the creek channel to avoid dropping debris into the water. The existing bridge will be removed after construction of the new bridge is completed. Scour countermeasures will be used leaving either all or a portion of the existing east abutment in place and removing the west abutment. The creek bank will be re-graded to remove a portion of the artificial fill material that was placed during construction of the existing bridge.

An unnamed tributary channel runs east to west on the west bank of Tres Pinos Creek adjacent to the existing bridge. This tributary discharges into Tres Pinos Creek. The channel currently runs between the southern edge of Panoche Road and the toe of a steep hillside adjacent to the road, past the existing east bridge abutment and into the creek. Because the alignment of the roadway is shifting to the south, this channel will be covered by the construction of the new road bed; as such, a new channel will be graded along the south edge of the realigned road. A portion of the realigned channel will be rectangular in shape, and bound between the vertical wing wall of the bridge (at the southeast corner of the bridge) and a vertical retaining wall that will retain a new cut slope in the adjacent hillside. The portion of channel realignment will be approximately 130 feet long. A retaining will be constructed against the hillside east of the creek and south of the roadway to minimize excavation into the hillside. The wall will allow the unnamed tributary to remain as an open channel and minimize biological impacts by allowing for wildlife passage. The wall length is estimated to be 140 feet long.

A natural spring located on the private parcel, east of the Project site, provides significant water supply for a large ranch operation. The landowner has a spring box and pump house located approximately 80 feet northeast of the Project site. Construction activities at the Project site will be monitored to avoid impacts to the property owner’s natural spring and the supplying aquifer. Rock slope protection will be placed on the banks of Tres Pinos Creek to protect the abutment from

hydraulic scour. The rock slope protection blanket will continue upstream on the east bank to mitigate for increased channel velocities (in the vicinity of the natural spring) that result from removing the existing bridge and widening the channel with the longer bridge. The rock slope protection blanket will be placed on the existing bank surface, without excavating into the bank, in order to avoid affecting the natural spring.

REGULATORY REQUIREMENTS

Caltrans Protocol Requirements

The Caltrans Traffic Noise Analysis Protocol[1], which supports 23 Code of Federal Regulations (CFR) 772.5, identifies a project as Type I that involves one or more of the following:

1. The construction of a highway on a new location; or

2. The physical alteration of an existing highway where there is either:

    a. Substantial horizontal alteration: A project that halves the distance between the traffic noise source and the closest receptor between the existing condition to the future build condition, or

    b. Substantial vertical alteration: A project that removes shielding thereby exposing the line-of-sight between the receptor and the traffic noise source. This is done by altering either the vertical alignment of the highway or the topography between the highway traffic noise source and the receptor; or

3. The addition of a through-traffic lane(s). This includes the addition of a through-traffic lane that functions as a high-occupancy vehicle (HOV) lane, high-occupancy toll (HOT) lane, bus lane, or truck climbing lane; or

4. The addition of an auxiliary lane, except for when the auxiliary lane is a turn lane; or

5. The addition or relocation of interchange lanes or ramps added to a quadrant to complete an existing partial interchange; or

6. Restriping existing pavement for the purpose of adding a through traffic lane or an auxiliary lane; or

7. The addition of a new or substantial alteration of a weigh station, rest stop, ride-share lot, or toll plaza.

A project that does not meet one or more of the requirements mentioned above is considered a Type III project. While a Type III project does not require an operation related noise analysis, a

[1] State of California, California State Transportation Agency, Department of Transportation, 2011. *Traffic Noise Analysis Protocol*. May.

memo presenting the noise impacts associated with construction activities is typically completed. The proposed Project is considered a Type III project because of the following:

- The Project does not involve construction of a highway on a new location;
- The Project would not halve the horizontal distance between the existing bridge and nearest sensitive receptor;
- The Project does not incorporate a substantial vertical alteration;
- The Project does not include the addition of a through-traffic lane;
- The Project does not include the addition of auxiliary lane;
- The Project does not include addition or relocation of interchange lanes or ramps;
- The Project does not include restriping existing pavement for the purpose of adding a through – or auxiliary-traffic lane;
- The Project does not include the addition or alteration of a weigh station, rest stop, ride-share lot, or toll plaza.

Construction Standards

Caltrans Standard Specifications in Section 14-8.02 would be required to minimize construction noise impacts on sensitive land uses near the Project site. Caltrans Standard Specifications requires noise levels from the Contractor's operations, between the hours of 9:00 p.m. and 6:00 a.m., to be at or below 86 A-weighted decibels (dBA) maximum instantaneous noise level (L_{max}) at a distance of 50 feet from the job site.[2]

San Benito County Noise Standards

County Code. Chapter 19.39.051(H) and Chapter 25.37.035(E)(2) of the San Benito County Code exempts temporary construction, demolition or maintenance of structures between the hours of 7:00 a.m. and 7:00 p.m., except Sundays and federal holidays. As such, construction noise generated by the Project would be exempt to Chapter 19.39 Noise Control Regulations and Chapter 25.37 of the County Code as long as construction activities occur Monday through Saturday between 7:00 a.m. and 7:00 p.m.[3]

EXISTING NOISE SENSITIVE RECEPTORS

The Project study area is located in a rural portion of San Benito County and is mainly occupied by natural terrain, a creek, and a single-family residential unit on parcel number APN 0271500030. The single-family residential unit is the nearest sensitive receptor to the Project study area. The closest general construction activities associated with the proposed Project would occur within 140 feet of the nearest sensitive receptor. **Figure 2** shows the location of the sensitive receptor in comparison to the location of the nearest area of the Project where construction activity will occur.

---

[2] State of California, California State Transportation Agency, Department of Transportation, 2018. *Standard Specifications*.

[3] San Benito County Code of Ordinances, Chapter 19.39 Noise Control Regulations, Section 19.39.051(H) Exemptions.

LONG-TERM OPERATIONAL NOISE IMPACTS

No Build Alternative

Under the No Build Alternative, no improvements to the proposed Project would be made other than routine bridge and roadway maintenance. Noise-sensitive receptors located within the Project area would not be exposed to a new traffic noise impact.

Build Alternative

Since the construction of the proposed Project does not meet any of the Type I requirements described in the Traffic Noise Protocol, a detailed Type I long-term operational noise analysis is not required for the proposed Project. Rather, the proposed Project is classified as a Type III project which only requires an analysis of noise associated with Project construction.

This technical noise memorandum is provided to identify Project-related construction noise impacts and prescribe appropriate avoidance, minimization, and/or mitigation measures in order to comply with Caltrans Standard Specification in Section 14-8.02, Chapter 19.39 of the San Benito County Code (Noise Control Regulations) and the San Benito County General Plan Noise Element.

CONSTRUCTION NOISE IMPACTS

No Build Alternative

No construction activities would occur under the No Build Alternative and no short-term noise impacts would result.

Build Alternative

Two types of short-term noise impacts would occur during Project construction, including: 1) equipment delivery and construction worker commutes; and 2) Project construction operations.

The first type of short-term construction noise would result from transport of construction equipment and materials to the Project site and construction worker commutes. These transportation activities would incrementally raise noise levels on access roads leading to the site. It is expected that larger trucks used in equipment delivery will generate higher noise impacts than trucks associated with worker commutes. The single-event noise from equipment trucks passing at a distance of 50 feet from a sensitive noise receptor would reach a maximum level of 84 dBA L_{max}. However, the pieces of heavy equipment for grading and construction activities would be moved on-site just one time, then would remain for the duration of each construction phase. This one time trip, when heavy construction equipment is moved on and off-site, would not add to the daily traffic noise in the Project vicinity. Furthermore, the projected traffic from the construction worker commutes would be minimal when compared to existing traffic volumes on Panoche Road and other affected streets, and its associated long-term noise level change would not be perceptible. Therefore, equipment transport noise and construction-related worker commute impacts would be short-term and would not be substantial.

The second type of short-term noise impact is related to noise generated during Project construction. Construction is performed in discrete steps, each having its own mix of equipment

and, consequently, its own noise characteristics. These various sequential phases will change the character of the noise generated, as well as the noise levels in the study area as construction progresses. Despite the variety in the type and size of construction equipment, similarities in the dominant noise sources and patterns of operation allow construction-related noise ranges to be categorized by work phase. **Table A: Typical Construction Equipment Noise Levels** lists typical construction equipment noise levels (L_{max}) recommended for noise impact assessments based on a distance of 50 feet between the equipment and a noise receptor.

Table A: Typical Construction Equipment Noise Levels

Equipment Description	Maximum Noise Level (L_{max}) at 50 Feet [1]
Backhoes	80
Compactor (ground)	80
Cranes	85
Dozers	85
Dump Trucks	84
Excavators	85
Flat Bed Trucks	84
Front-end Loaders	80
Graders	85
Impact Pile Drivers	95
Jackhammers	85
Pick-up Truck	55
Pneumatic Tools	85
Pumps	77
Rock Drills	85
Rollers	85
Scrapers	85
Tractors	84

Source: *Federal Highway Administration Roadway Construction Noise Model* (January 2006).

[1] Maximum noise levels were developed based on Spec 721.560 from the Central Artery/Tunnel (CA/T) program to be consistent with the City of Boston's Noise Code for the "Big Dig" project.

Note: Noise levels reported in this table are rounded to the nearest whole number.

L_{max} = maximum instantaneous sound level

Normal construction operations, specifically during the site preparation phase, which includes excavation and grading, may generate high noise levels from an active construction area. Earthmoving equipment includes excavating machinery such as excavators, bulldozers, and front-end loaders. Earthmoving and compacting equipment includes compactors, scrapers, and graders. Typical operating cycles for these types of construction equipment may involve 1 or 2 minutes of full-power operation followed by 3 or 4 minutes at lower power settings.

Noise associated with the use of earthmoving construction equipment is estimated between 55 and 85 dBA L_{max} at a distance of 50 feet from each piece of equipment. As seen in **Table A**, the maximum noise level generated by each excavator, bulldozer and pick-up truck is assumed to be approximately 85 dBA $L_{max,}$ 85 dBA $L_{max,}$ and 55 dBA L_{max} at 50 feet, respectively. Each piece of

construction equipment operates as an individual point source. Utilizing the following equation, a composite noise level can be calculated when multiple sources of noise operate simultaneously:

$$Lmax\ (composite) = 10 * \log_{10}\left(\sum_{1}^{n} 10^{\frac{Ln}{10}}\right)$$

The conservative composite noise level during this phase of construction would be 88 dBA L_{max} at a distance of 50 feet from an active construction area. Once composite noise levels are calculated, reference noise levels can then be adjusted for distance using the following equation:

$$Lmax\ (at\ distance\ X) = Lmax\ (at\ 50\ feet) - 20 * \log_{10}\left(\frac{X}{50}\right)$$

In general, this equation shows that doubling the distance would decrease noise levels by 6 dBA while a halving the distance would increase noise levels by 6 dBA.

The closest residential unit, the single-family home on parcel APN 0271500030, 140 feet from the nearest general construction activity. The results of the equations above show that this residential unit may be subject to short-term noise reaching 79.1 dBA L_{max} generated by general construction activities. The short-term construction related noise levels that the single-family residential unit would be exposed to does not exceed Caltrans construction noise thresholds and would be exempt from the San Benito County Code based on Section 19.39.051(H) as long as construction activities occur only between 7:00 a.m. to 7:00 p.m. Monday through Saturday, as described above. Mitigation measures would not be required to reduce construction noise levels in order to comply with County and Caltrans noise requirements; however, standard construction noise avoidance and minimization measures are suggested to reduce noise levels generated by construction equipment in the general area of the Project.

CONSTRUCTION AVOIDANCE, MINIMIZATOIN AND MITTIGATION MEASURES

The following minimization measures shall be incorporated to reduce construction noise to surrounding receptors:

1. Construction activities on the Project site shall occur Monday through Saturday between the hours of 7:00 a.m. and 7:00 p.m. to comply with construction noise exemptions set forth by County Code Chapters 19.39 and 25.37. No construction activity may occur on the Project site outside of these hours, on a Sunday, or on federal/state holidays.

2. The Contractor shall equip all internal combustion engines with the manufacturer-recommended muffler and shall not operate any internal combustion engine on the job site without its appropriate muffler.

These minimization measures will reduce construction noise levels at the nearest sensitive receptor.

Attachments: Figure 1: Regional Location
Figure 2: Project Vicinity and Sensitive Receptor Location

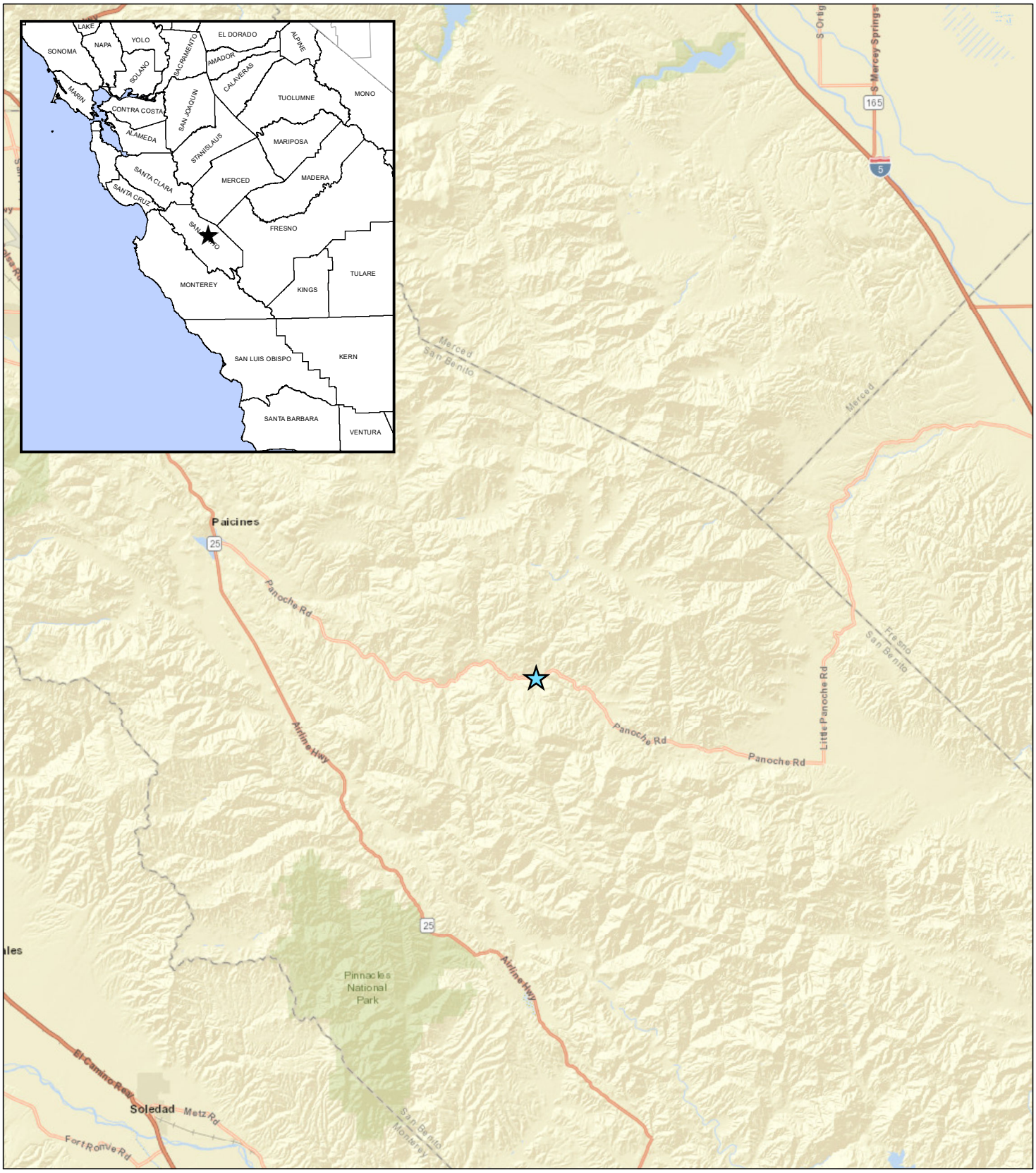

LEGEND

Project Location

FIGURE 1

Panoche Road Bridge (No. 43C0027) over
Tres Pinos Creek Replacement Project
San Benito County, California; Caltrans District 5
Federal Project No. BRLO-5943(056)

Regional Location

0 2.5 5
Miles

SOURCE: ESRI World Street Map (05/2020)

I:\QCE2001\GIS\Reports\NES\NES_Fig1_Regional_loc.mxd (10/29/2020)

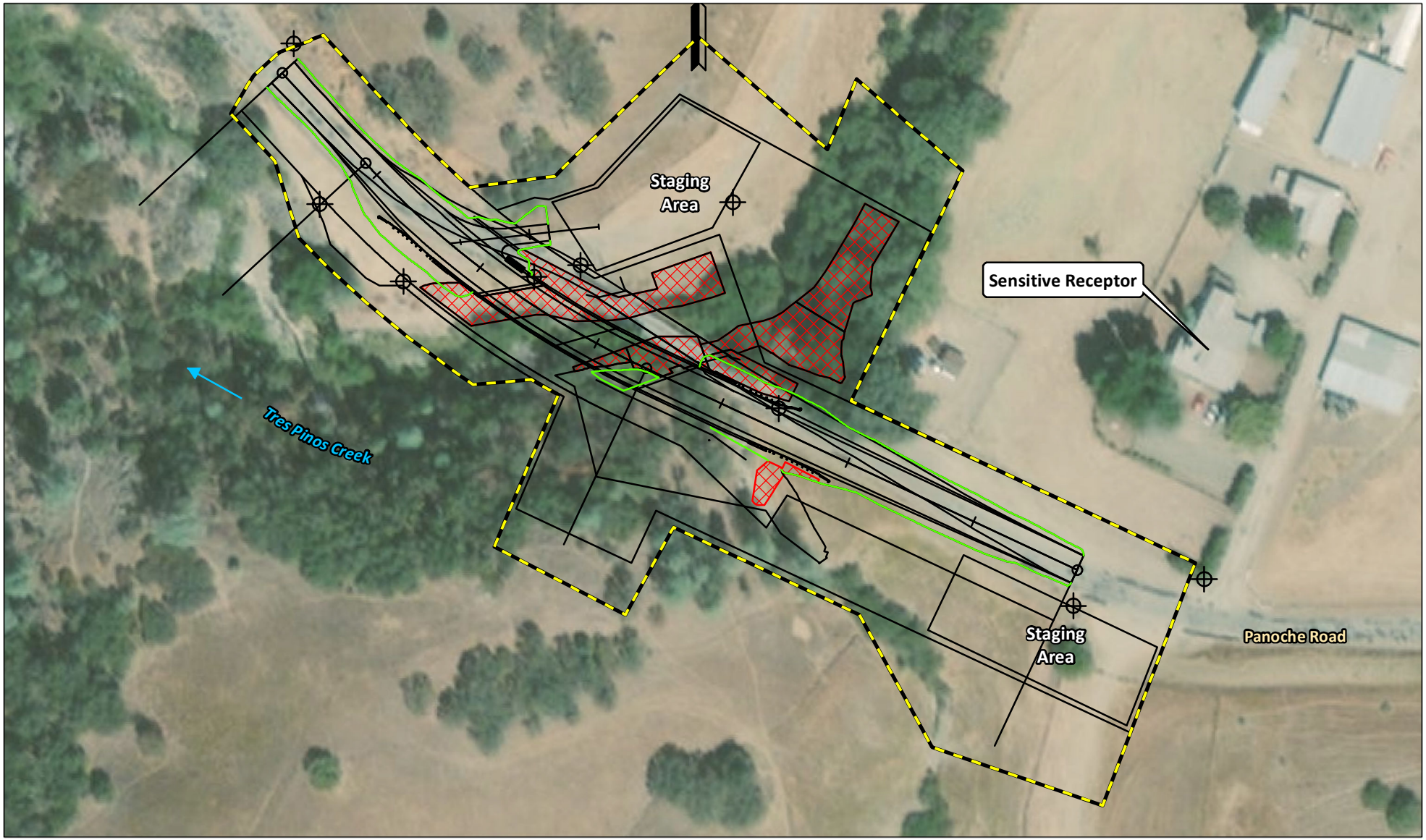

LEGEND

- Project Boundary - (3.66 ac)
- Project Design
- Rock Slope Protection
- Cut and Fill

0 50 100
FEET

FIGURE 2

Panoche Road Bridge (No. 43C0027) over
Tres Pinos Creek Replacement Project
San Benito County, California; Caltrans District 5
Federal Project No. BRLO-5943(056)

Project Boundary and Design

SOURCE: Basemap - ESRI World Imagery (10/2018); Design - Quincy Engineering (12/2020)

I:\QCE2001\GIS\Reports\Noise Memo\Noise_Fig4_AA_design.mxd (2/8/2021)