Ontario International Airport Connector Project

ONTCONNECTOR



APPENDIX Q: TRANSPORTATION TECHNICAL REPORT (APPENDICES)

October 2024

sbeta

Prepared for:

San Bernardino County Transportation Authority
1170 West Third Street, Second Floor
San Bernardino, California 92410-1715

APPENDIX A

LSA

CARLSBAD
CLOVIS
IRVINE
LOS ANGELES
PALM SPRINGS
POINT RICHMOND
RIVERSIDE
ROSEVILLE
SAN LUIS OBISPO

MEMORANDUM

DATE: November 28, 2022

TO: David DeRosa

FROM: Ambarish Mukherjee, P.E., AICP

SUBJECT: Project Trip Generation Methodology, Tunnel to Ontario International Airport Project (LSA Project # AEM2201)

INTRODUCTION

This memorandum describes the trip generation methodology used for the development of project trips for the Transit Tunnel to Ontario International Airport Project (project) connecting Ontario International Airport (ONT) to the Rancho Cucamonga Metrolink station. Data sources utilized to develop the project trip generation include Federal Transit Administration (FTA) Simplified Trips-on-Project Software (STOPS) ridership forecasts from the Rebuilding American Infrastructure with Sustainability and Equity (RAISE) grant application for the project, San Bernardino Transportation Analysis Model (SBTAM) data, and airport enplanement data. Given that the project is a transit tunnel to the airport, it is expected that the project would reduce vehicle trips to the airport. Therefore, the tunnel ridership was converted to the corresponding reduction in vehicle trips to develop project trip generation. Vehicle trips from the converted ridership can be interpreted as vehicle trips that would be on the roadway system in the absence of this new connection (no-build scenario). The project trips generated by this methodology have been subtracted from no-build volumes to develop volumes for build conditions. The only exception would be a nominal number of trips dropping off tunnel riders at the Metrolink station who would otherwise have traveled directly to the airport. This nominal drop-off traffic was added to no-build traffic volumes at the Metrolink station.

TUNNEL RIDERSHIP

The RAISE grant application, "2022 Rebuilding American Infrastructure with Sustainability and Equity Grant Application, Autonomous, Zero-Emission Transit Tunnel to Ontario International Airport," submitted by the San Bernardino County Transportation Authority (SBCTA) and Omnitrans and dated April 14, 2022, contained ridership forecasts for the transit tunnel. The ridership forecasts for the grant application were conducted using the STOPS modeling tool. The application process included testing of multiple build scenarios for the transit tunnel. Two scenarios (one for the opening year and one for the horizon year) were selected for the grant application ridership. To be consistent with the grant application, the same two model scenarios were used to develop the project trip generation. Following are the two scenarios as considered in the grant application:

- **Year 2025 Build for Brightline, Tunnel Fare Policy 1 (Opening Year Scenario—OY5):** This scenario included a bi-directional tunnel, Brightline service at 30-minute frequency, Metrolink service at 30-minute frequency, Fare Policy 1, and 7.9 million annual passengers (MAP) at ONT. The tunnel itself is assumed as bi-directional (also called "dual tunnel"), where the term "bi-directional" means that each direction has a dedicated path, whether that be in two separate tunnels or one larger tunnel designed to operate in both directions simultaneously. The Brightline High-Speed Rail (HSR) project provides a direct rail connection between the San Bernardino Valley and the Victor Valley, connecting the Rancho Cucamonga Metrolink station to two HSR stations located 25 to 35 miles north of Rancho Cucamonga (Hesperia and Apple Valley, respectively). The Metrolink San Bernardino Line (SBL) service was enhanced to 30-minute frequency, and Fare Policy 1 assumed fares to be consistent with Omnitrans fares.

- **Year 2040 Build for Dual Tunnel, Build for Brightline (Horizon Year Scenario—HY3):** Similar to the opening-year scenario, this scenario also included a bi-directional tunnel, Brightline service at 30-minute frequency, Metrolink service at 30-minute frequency, Fare Policy 1, and 15 MAP at ONT. Given that this is a horizon-year scenario, the annual airport passengers were adjusted to 15 MAP.

The grant application also disaggregated the tunnel ridership into four different market segments as described below. While three of the market segments are included in the STOPS model forecasts, ridership for "out-of-region visitors renting cars" was estimated outside the model. A detailed description of the ridership estimation for this market segment is provided in the grant application. The four market segments included in the grant application were used in the development of build condition traffic volumes and to aid in the distribution of those project trips. Descriptions of the four market segments as described in the grant application are as follows:

1. Trips to and from the airport by passengers who previously would have parked at ONT. In this case, a transit trip to and from the airport can replace two auto trips (one-for-one replacement).

2. Trips to and from the airport by passengers who were previously dropped off by a friend or family member. In this case, a passenger transit trip to/from the airport can replace four one-way auto trips (two trips for each passenger drop-off/pickup).

3. Trips to and from the airport by employees who previously drove to and parked at ONT.

4. Trips by visitors and business travelers who would previously have flown to ONT and rented a car but now instead can ride ONT Loop and Metrolink to their destinations, such as downtown Los Angeles or Redlands. In this case, each round trip on transit would replace two auto trips. It would be similar to the case where a business traveler from Southern California would fly into Oakland International Airport and take the tram to the Bay Area Rapid Transit (BART) Coliseum Station, then take BART to downtown San Francisco.

Ridership from the visitors/business travelers market segment was added to the daily ridership from the STOPS model. Development of project trip generation included ridership for all four market segments (STOPS + out-of-region visitors/business travelers). Project ridership totals for the opening and horizon years are shown in Table 1.

Table1: Ontario International Airport NT Tunnel Daily Ridership—Opening and Horizon Years

Scenario	Daily Ridership		Total Ridership
	STOPS Ridership	Out-of-Region Visitors	
2025 (OY 5)	404	80	484
2040 (HY 3)	775	185	960

HY 3 = horizon-year scenario
OY 5 = opening-year scenario
STOPS = Simplified Trips-on-Project Software

Peak and Off-Peak Ridership

Project trips for the a.m. and p.m. peak hours are required for the development of build condition volumes and to conduct traffic analysis of the project. Therefore, the first step in the process was to disaggregate the daily ridership from the grant application into peak and off-peak ridership.

Outputs from the STOPS model runs were obtained to assist in the disaggregation of daily ridership. STOPS forecasts include ridership by different access modes (walk, kiss-and-ride [KNR], park-and-ride [PNR], and transfer). Ridership from all modes was used to develop project volumes, as all tunnel passengers would have used a vehicle (either as driver or passenger) in the absence of the project. STOPS outputs also include ridership by peak and off-peak period. As indicated before, STOPS outputs included tunnel ridership for three market segments, and out-of-region visitors were estimated separately. The peak and off-peak ridership ratio from the STOPS results was used to distribute the ridership for out-of-region visitors. Table 2 shows the total (all four market segments) peak and off-peak tunnel ridership for both opening- and horizon-year scenarios.

Table 2: Peak and Off-Peak Ridership–Opening and Horizon Years

Scenario	Peak Ridership	Off-Peak Ridership	Daily Ridership
2025 (OY 5)	109	374	484
2040 (HY 3)	176	784	961

Note: Data may appear to not add up correctly due to rounding.
HY 3 = horizon-year scenario
OY 5 = opening-year scenario

A.M. and P.M. Peak-Hour Ridership

STOPS model outputs are in production-attraction format, similar to transit outputs in a typical trip-based travel model. Thus, ridership from STOPS is available for peak and off-peak periods, but the peak period is not separated into a.m. and p.m. peak periods. The peak-period ridership identified above in Table 2 was separated into a.m. and p.m. peak periods using the peak-period volumes from SBTAM. The a.m. and p.m. peak-period SBTAM roadway volumes to ONT were used to disaggregate the peak-period ridership into a.m. and p.m. peak periods. The same methodology was used to disaggregate ridership for both the opening and horizon years. Table 3 illustrates the a.m. and p.m. peak-period ridership for both the opening- and horizon-year scenarios.

Table 3: A.M. and P.M. Peak-Period Ridership—Opening and Horizon Years

Scenario	A.M. Peak-Period Ridership	P.M. Peak-Period Ridership	Total Peak-Period Ridership
2025 (OY 5)	49	60	109
2040 (HY 3)	97	79	176

HY 3 = horizon-year scenario
OY 5 = opening-year scenario

The project traffic analysis was conducted for the a.m. and p.m. peak hours. Therefore, the peak-period ridership identified in Table 3 needs to be disaggregated into corresponding peak hours. The STOPS model does not include any peak-period-to-peak-hour conversion factors. However, given that STOPS and SBTAM are representing a typical weekday model and so disaggregation of the peak period into a.m. and p.m. peak hours was based on data from SBTAM, use of the peak-period-to-peak-hour conversion factors from SBTAM was considered appropriate. The a.m. and p.m. peak-period ridership identified in Table 3 above was converted into respective peak-hour ridership using SBTAM conversion factors of 0.35 and 0.28 for the a.m. and p.m. peaks, respectively. Table 4 shows a.m. and p.m. peak-hour ridership for both the opening- and horizon-year scenarios.

Table 4: A.M. and P.M. Peak-Hour Ridership—Opening and Horizon Years

Scenario	A.M. Peak-Hour Ridership	P.M. Peak-Hour Ridership
2025 (OY 5)	17	17
2040 (HY 3)	34	22

HY 3 = horizon-year scenario
OY 5 = opening-year scenario

Vehicle Trip Conversion

As indicated above, given that the project is a transit tunnel, its ridership is measured in person trips. However, the project trips for traffic analysis should be in vehicle trips and the project ridership should be converted into equivalent vehicle trips. Data from SBTAM were used to convert tunnel ridership into equivalent vehicle trips. An average auto occupancy factor of 1.52 from SBTAM was used to convert ridership into vehicle trips. It should be noted that average occupancy from the model included trips for all trip purposes. As can be seen from the market segments, the tunnel ridership included home-based work trips by employees working at/near ONT and general passenger trips (nonhome-based trips). Therefore, average auto occupancy for all trip purposes was used. Table 5 shows a.m. and p.m. peak-hour vehicle trips for the opening-year and horizon-year scenarios.

Table 5: A.M. and P.M. Peak-Hour Project Vehicle Trips– Opening and Horizon Years

Scenario	A.M. Peak-Hour Vehicles	P.M. Peak-Hour Vehicles
2025 (OY 5)	11	11
2040 (HY 3)	22	15

HY 3 = horizon-year scenario
OY 5 = opening year scenario

Market Segmentation

The above steps of converting peak ridership into a.m. and p.m. peak-hour vehicle trips were conducted on an aggregate scale (no market segmentation). Therefore, the peak-hour project vehicle trips were disaggregated into the four market segments by using the daily ridership market segment shares for both the opening and horizon years. The a.m. and p.m. peak-hour vehicle trips were disaggregated into ridership market segments so that the vehicle trips could be appropriately assigned within the project study area for preparation of the traffic analysis. Table 6 shows the breakdown of a.m. and p.m. peak-hour vehicle trips under each of the ridership market segments.

Table 6: A.M. and P.M. Peak-Hour Project Vehicle Trips by Market Segment— Opening and Horizon Years

Ridership Market Segment	2025 (OY 5)		2040 (HY 3)	
	A.M. Peak-Hour Vehicles	P.M. Peak-Hour Vehicles	A.M. Peak-Hour Vehicles	P.M. Peak-Hour Vehicles
Air passengers previously parking (1)	2	2	4	3
Air passengers previously dropped off (2)	4	4	9	6
Employees previously parking (3)	4	4	5	3
Out-of-region visitors renting cars (4)	2	2	4	3
Total	**11**	**11**	**22**	**15**

Note: Data may appear to not add up correctly due to rounding.
HY 3 = horizon year scenario
OY 5 = opening year scenario

Opening and Horizon Year Vehicle Trips

The STOPS model runs were conducted for 2025 as the opening year and 2040 as the horizon year. The STOPS model used for tunnel ridership forecasts was originally developed for the West Valley Connector (WVC) Corridor Project and was used to develop forecasts for Brightline as well. Also, it appears that ONT passenger forecasts and San Bernardino County demographic forecasts were reasonably available for 2025 and 2040; therefore, those same forecast years were used for the ONT tunnel project as well. However, the first full operating year for the tunnel is assumed to be 2028 and the corresponding horizon year is assumed to be 2047. Therefore, tunnel ridership was interpolated to 2028 using 2025 and 2040 ridership forecasts. Similarly, forecasts of the 20-year horizon (2047) were extrapolated in a linear fashion (not exponential) to be more conservative.

The same methodology of linear interpolation and extrapolation used in the grant application was used to estimate a.m. and p.m. peak-hour project vehicle trips by different market segmentations. Linear interpolation between 2025 and 2040 was used to estimate 2028 project trips, and linear extrapolation was used to extrapolate project trips from 2040 to 2047. Table 7 shows the a.m. and p.m. peak-hour with-project vehicle trips for 2028 and 2047.

Table 7: A.M. and P.M. Peak-Hour Vehicle Trips by Market Segment—Updated Opening and Horizon Years

Ridership Market Segment	2028		2047	
	A.M. Peak-Hour Vehicles	P.M. Peak-Hour Vehicles	A.M. Peak-Hour Vehicles	P.M. Peak-Hour Vehicles
Air passengers previously parking (1)	2	2	5	3
Air passengers previously dropped off (2)	5	4	11	7
Employees previously parking (3)	5	4	6	4
Out-of-region visitors renting cars (4)	2	2	5	3
Total	**14**	**12**	**27**	**17**

HY 3 = horizon-year scenario
OY 5 = opening-year scenario

Upon identification of peak-hour project vehicle trips, the project vehicle trips were further refined depending on the ridership market segment and the destination (airport terminals/rental car lot/ Metrolink station), as explained in the next section.

Project Trip Generation

Table 7 estimates the total number of vehicles that would be replaced by the project; however, those vehicles must be converted into project trips/trip generation (e.g., attributed to the appropriate destination location [ONT Terminal 2, ONT Terminal 4, or rental car facilities]) and should be eventually distributed into ins/outs by time period and scenario for traffic analysis purposes. Ridership market segments were used in the development of project trip generation using the following steps:

1. **Identification of Trip Locations:** The vehicle trips from Table 7 were distributed among the three project locations (Rancho Cucamonga Metrolink station, ONT terminals, and car rentals at ONT).

    a. The STOPS model outputs provide estimates of the number of project drop-off trips at the Rancho Cucamonga Metrolink station that would have otherwise been drop-offs at ONT terminals. These would be trips that would be added to no-build traffic at the Metrolink station. Based on the model outputs, it is estimated that less than 3 percent of the peak-hour traffic would be drop-offs at the Metrolink station, which would be less than one trip during the peak hour. Therefore, as a conservative estimate, it was assumed that approximately 5 percent of project trips would be dropped off at the Metrolink station under build conditions. This would result in two trips (one vehicle entering and one vehicle exiting after drop-off) at the station. These trips would be added to no-build traffic volumes at the station, as these drop-offs occur due to the project.

b. The car rental trips are destined to the ONT car rental agencies, and no adjustments were made to the trips presented in Table 7.

c. The three market segments from the STOPS model (Market Segments 1, 2, and 3) are destined to the ONT terminals. While Market Segments 1 and 3 (passengers previously parking and employees parking) involve one vehicle trip at the terminal, Market Segment 2 involves two trips (one entering ONT and one leaving ONT after passenger drop-off). Therefore, the total number of trips at the ONT terminal for a scenario would be 1*Market Segment 1 + 2*Market Segment 2 + 1*Market Segment 3. For example, for 2028 a.m. conditions, the total trips would be 17 (1*2 + 2*5 + 1*5 = 17). However, of the 17 trips, 2 trips destined to the terminals under no-build conditions are redirected to the Rancho Cucamonga Metrolink station due to the project. Therefore, those trips were removed from the total trips destined to the ONT terminals. In the example used (2028 a.m. peak-hour conditions), the final trips destined to the terminals would be 15 (17 - 2 trips redirected to the Metrolink station). Table 8 shows the final trips destined to the different locations.

Table 8: Opening- and Horizon-Year A.M. and P.M. Peak-Hour Trips by Destination Location

	2028		2047	
	A.M.	P.M.	A.M.	P.M.
Total trips destined to ONT terminals (1*MS1 + 2*MS2 + 1*MS3) (a)	17	14	33	21
Trips dropped off at Rancho Cucamonga Metrolink station (build conditions) (1 entering and 1 exiting) (b)	2	2	2	2
Adjusted trips destined to ONT terminals (c = a-b)	15	12	31	19
Trips to rental car agencies	2	2	5	3

Note: Ridership Market Segments from Table 7.
MS1 = Market Segment 1
MS2 = Market Segment 2
MS3 = Market Segment 3
ONT = Ontario International Airport

2. **Distribution Between ONT Terminals (Terminal 2 and Terminal 4):** The total trips destined to ONT terminals identified in Step 1, above, were distributed between Terminals 2 and 4 using ratio of centroid connector volumes of the corresponding airport traffic analysis zones (TAZs) in SBTAM. The same approach was used to distribute terminal trips for the a.m. and p.m. peak hours for the opening and design years using the corresponding SBTAM volumes (base and future SBTAM scenarios, respectively). Table 9 shows the distribution of terminal trips between Terminal 2 and Terminal 4.

Table 9: Opening- and Horizon-Year A.M. and P.M. Peak-Hour Trips by ONT Terminal

Adjusted ONT Terminal Trips	2028		2047	
	A.M.	P.M.	A.M.	P.M.
Terminal 2 (T2)	6	3	24	11
Terminal 4 (T4)	9	9	7	8

ONT = Ontario International Airport

3. **Estimation of In/Out Splits for Terminal Trips:** Similar to Step 2, SBTAM volumes were used to develop the in/out splits for terminal trips. Entering and exiting centroid connector volumes from SBTAM were used to disaggregate the terminal trips into ins and outs. The same approach was used to distribute terminal trips for the a.m. and p.m. peak hours for the opening and design years using the corresponding SBTAM volumes. Ins/outs for trips at the ONT terminals are shown in Table 10, below.

Table 10: Opening- and Horizon Horizon-Year A.M. and P.M. Peak-Hour Trips by Direction (In/Out) by ONT Terminal

Adjusted ONT Terminal Trips	2028				2047			
	A.M.		P.M.		A.M.		P.M.	
	In	Out	In	Out	In	Out	In	Out
Terminal 2 (T2)	3	3	2	1	13	11	6	5
Terminal 4 (T4)	7	2	3	6	5	2	3	5

ONT = Ontario International Airport

4. **Estimation of In/Out Splits for Rental Car Trips:** A simplified assumption of 50/50 split was assumed for ins/outs of the rental car trips. Given the minimal number of trips and the unavailability of specific data to assist with the distribution, the simplified approach was used.

Table 11: Opening- and Horizon- Year A.M. and P.M. Peak- Hour Trips by Direction (In/Out) for Rental Car Agencies

	2028				2047			
	A.M.		P.M.		A.M.		P.M.	
	In	Out	In	Out	In	Out	In	Out
Rental Car Trips	1	1	1	1	3	2	2	1

The four steps described above were used to develop project trip generation for the a.m. and p.m. peak hours for both the project opening and design years. The final project trip generation is presented in Table 12, below. As can be seen from Table 12, project trips for all categories assume reduction of vehicle trips from no-build conditions except for trips that are being dropped off at the Rancho Cucamonga Metrolink station. Trips that are being dropped off at the Rancho Cucamonga Metrolink station were added to the corresponding no-build traffic volumes.

LSA

Table 12 - Final Project Trip Generation

Trip Generation by Analysis Scenarios	A.M. Peak Hour			P.M. Peak Hour		
	In	Out	Total	In	Out	Total
Opening Year (2028) Trip Generation						
Terminal 2 Trips[1, 2]	(3)	(3)	(6)	(2)	(1)	(3)
Terminal 4 Trips[1, 2]	(7)	(2)	(9)	(3)	(6)	(9)
Out-Of-Region Visitors Renting Cars[2]	(1)	(1)	(2)	(1)	(1)	(2)
Rancho Cucamonga Metrolink Station Trips[3]	1	1	2	1	1	2
Net Opening Year (2028) Trip Generation	**(10)**	**(5)**	**(15)**	**(5)**	**(7)**	**(12)**
Design Year (2047) Trip Generation						
Terminal 2 Trips[1, 2]	(13)	(11)	(24)	(6)	(5)	(11)
Terminal 4 Trips[1, 2]	(5)	(2)	(7)	(3)	(5)	(8)
Out-Of-Region Visitors Renting Cars[2]	(3)	(2)	(5)	(2)	(1)	(3)
Rancho Cucamonga Metrolink Station Trips[3]	1	1	2	1	1	2
Net Design Year (2047) Trip Generation	**(20)**	**(14)**	**(34)**	**(10)**	**(10)**	**(20)**

Note:

[1] Trips for Terminals 2 and 4 includes air passengers that previously parked at the self-parking lots, air passengers that were previously dropped off, and employees parking for work.

[2] Terminal 2 and 4 trips consist of 95% of the trips that are anticipated to utilize other rail connections that connect to Metrolink and will utilize the new tunnel connection.

[3] 5% of the trips will be air passengers dropped off at the Rancho Cucamonga Metrolink station instead of being dropped off at the airport.

APPENDIX B

CONCEPTUAL STAGING - RC TBM LAUNCH & STATION SITE



Per Vilhelmsson - HNTB 08/24/2022

CONCEPTUAL STAGING- ONT T2 TBM RETRIEVAL SITE

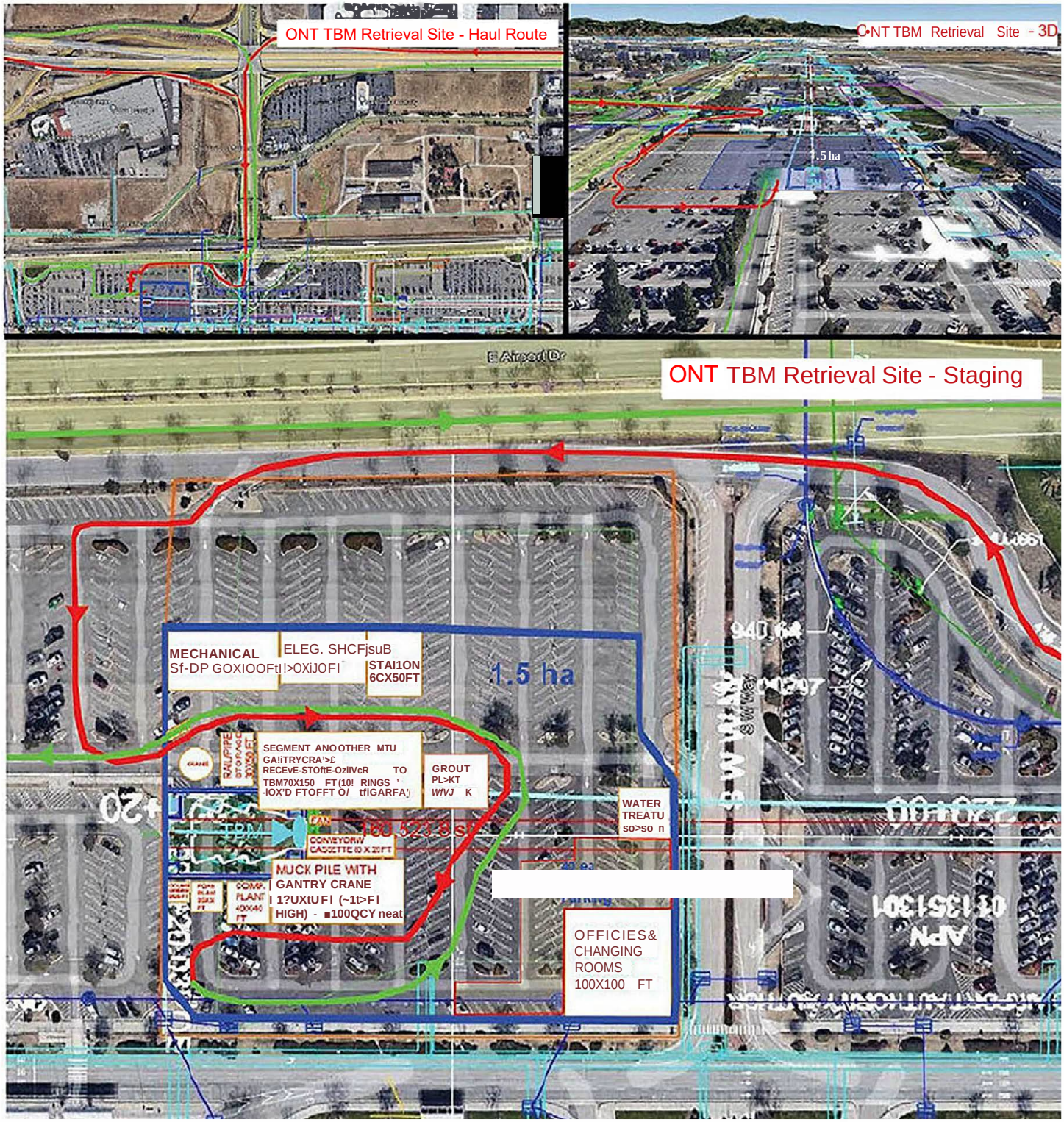

CONCEPTUAL STAG NG - ONT T4 STAT ON S TE

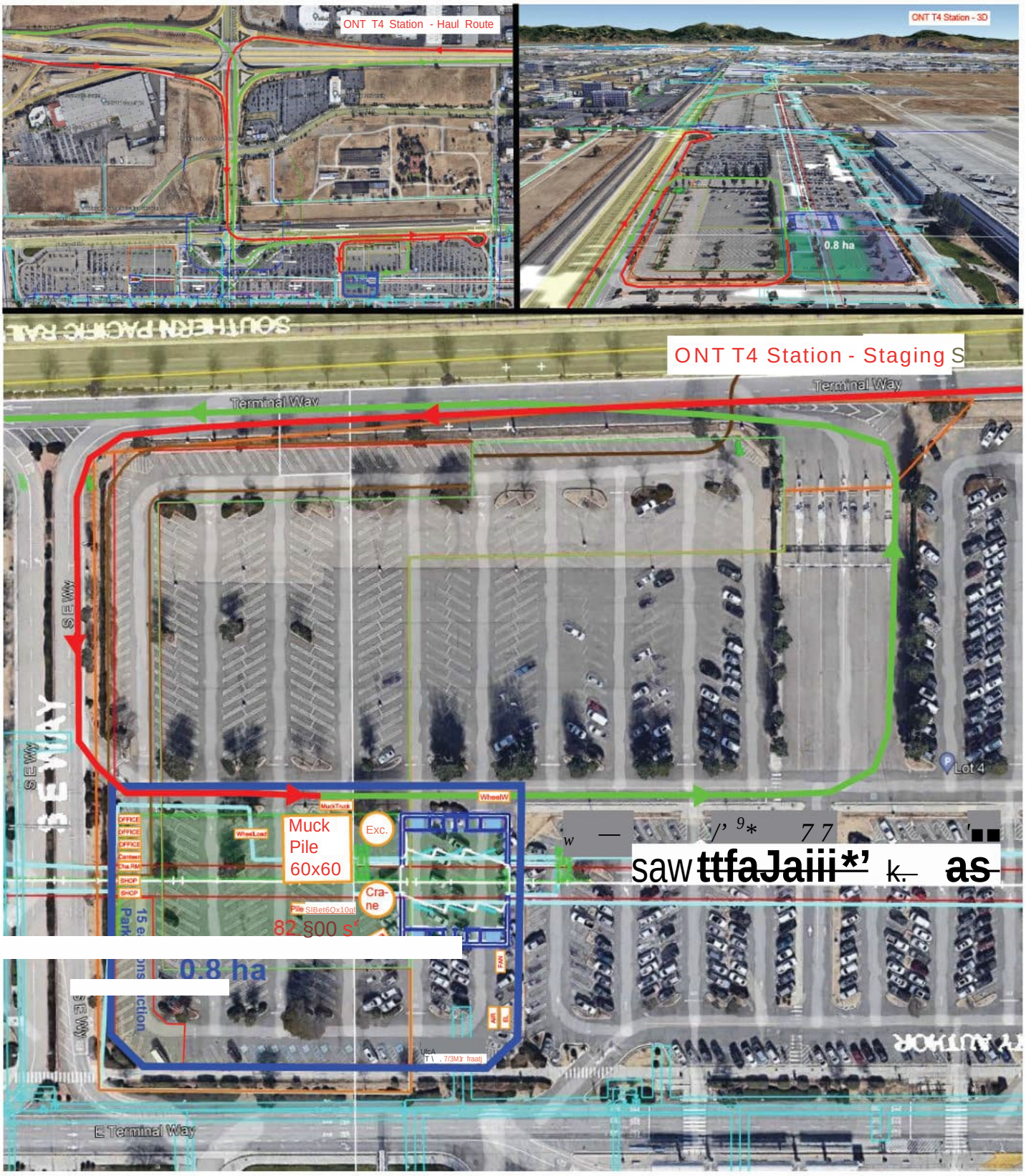

Per Vilhelmsson - HNTB 08/24/2022

APPENDIX C1

Counts Unlimited, Inc.
PO Box 1178
Corona, CA 92878
(951)268-6268

City of Ontario
N/S: Terminal Way West
E/W: Airport Drive
Weather: Clear

File Name : 01_ONT_Term W_AP AM
Site Code : 00322818
Start Date : 9/20/2022
Page No : 1

Groups Printed- Passenger Vehicles - Large 2 Axle Vehicles - 3 Axle Vehicles - 4+ Axle Trucks

	Airport Drive Westbound			Terminal Way West Northbound			Airport Drive Eastbound			
Start Time	Left	Thru	App. Total	Left	Right	App. Total	Thru	Right	App. Total	Int. Total
07:00 AM	10	130	140	8	3	11	117	12	129	280
07:15 AM	9	161	170	4	1	5	121	23	144	319
07:30 AM	9	155	164	4	4	8	197	16	213	385
07:45 AM	12	184	196	5	5	10	208	14	222	428
Total	40	630	670	21	13	34	643	65	708	1412
08:00 AM	16	168	184	9	0	9	171	20	191	384
08:15 AM	16	150	166	9	2	11	156	18	174	351
08:30 AM	20	123	143	7	6	13	135	21	156	312
08:45 AM	14	106	120	14	7	21	137	13	150	291
Total	66	547	613	39	15	54	599	72	671	1338
Grand Total	106	1177	1283	60	28	88	1242	137	1379	2750
Apprch %	8.3	91.7		68.2	31.8		90.1	9.9		
Total %	3.9	42.8	46.7	2.2	1	3.2	45.2	5	50.1	
Passenger Vehicles	75	1117	1192	58	28	86	1181	128	1309	2587
% Passenger Vehicles	70.8	94.9	92.9	96.7	100	97.7	95.1	93.4	94.9	94.1
Large 2 Axle Vehicles	28	33	61	1	0	1	33	9	42	104
% Large 2 Axle Vehicles	26.4	2.8	4.8	1.7	0	1.1	2.7	6.6	3	3.8
3 Axle Vehicles	2	8	10	0	0	0	13	0	13	23
% 3 Axle Vehicles	1.9	0.7	0.8	0	0	0	1	0	0.9	0.8
4+ Axle Trucks	1	19	20	1	0	1	15	0	15	36
% 4+ Axle Trucks	0.9	1.6	1.6	1.7	0	1.1	1.2	0	1.1	1.3

	Airport Drive Westbound			Terminal Way West Northbound			Airport Drive Eastbound			
Start Time	Left	Thru	App. Total	Left	Right	App. Total	Thru	Right	App. Total	Int. Total
Peak Hour Analysis From 07:00 AM to 08:45 AM - Peak 1 of 1										
Peak Hour for Entire Intersection Begins at 07:30 AM										
07:30 AM	9	155	164	4	4	8	197	16	213	385
07:45 AM	12	**184**	**196**	5	**5**	10	**208**	14	**222**	**428**
08:00 AM	**16**	168	184	**9**	0	9	171	**20**	191	384
08:15 AM	16	150	166	9	2	**11**	156	18	174	351
Total Volume	53	657	710	27	11	38	732	68	800	1548
% App. Total	7.5	92.5		71.1	28.9		91.5	8.5		
PHF	.828	.893	.906	.750	.550	.864	.880	.850	.901	.904

Counts Unlimited, Inc.
PO Box 1178
Corona, CA 92878
(951)268-6268

City of Ontario
N/S: Terminal Way West
E/W: Airport Drive
Weather: Clear

File Name : 01_ONT_Term W_AP AM
Site Code : 00322818
Start Date : 9/20/2022
Page No : 2

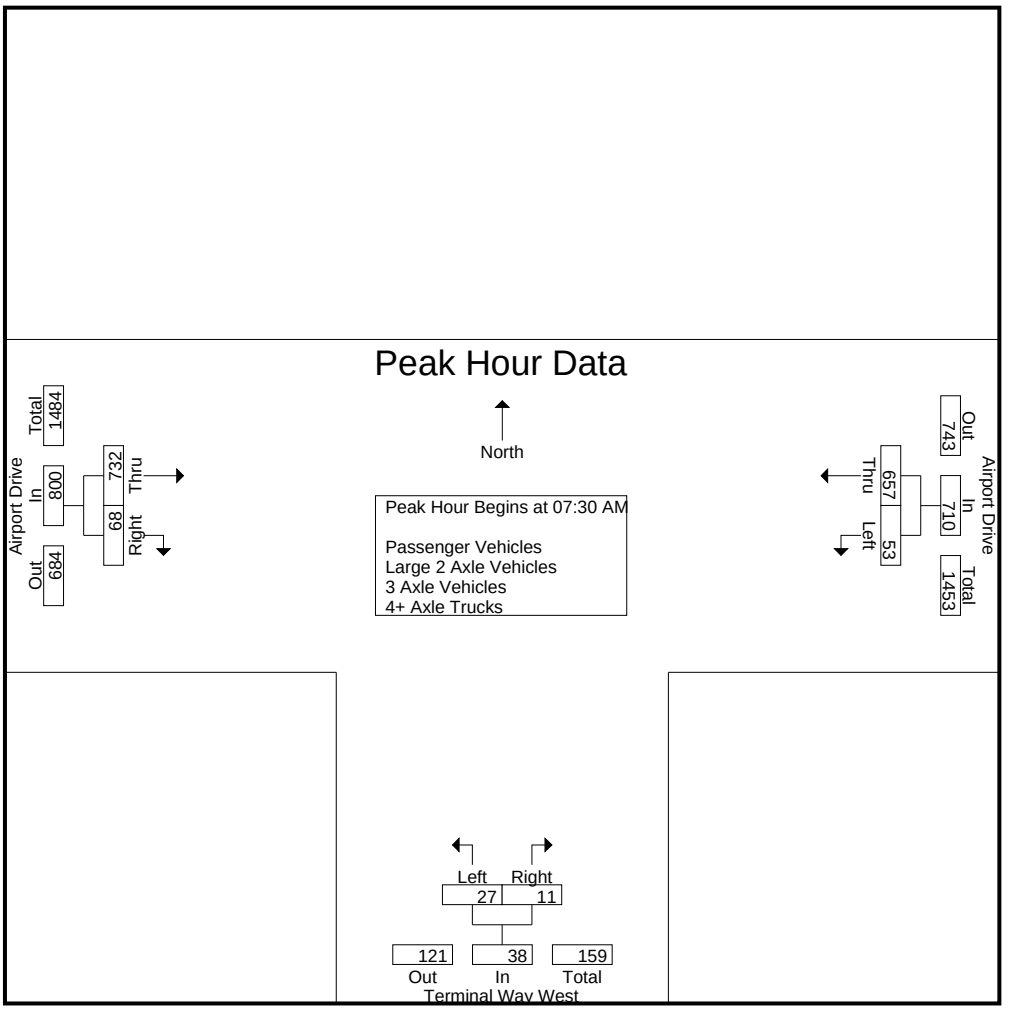

Peak Hour Analysis From 07:00 AM to 08:45 AM - Peak 1 of 1
Peak Hour for Each Approach Begins at:

	07:15 AM			08:00 AM			07:30 AM		
+0 mins.	9	161	170	9	0	9	197	16	213
+15 mins.	9	155	164	9	2	11	**208**	14	**222**
+30 mins.	12	**184**	**196**	7	6	13	171	**20**	191
+45 mins.	**16**	168	184	**14**	**7**	**21**	156	18	174
Total Volume	46	668	714	39	15	54	732	68	800
% App. Total	6.4	93.6		72.2	27.8		91.5	8.5	
PHF	.719	.908	.911	.696	.536	.643	.880	.850	.901

Counts Unlimited, Inc.
PO Box 1178
Corona, CA 92878
(951)268-6268

City of Ontario
N/S: Terminal Way West
E/W: Airport Drive
Weather: Clear

File Name : 01_ONT_Term W_AP AM
Site Code : 00322818
Start Date : 9/20/2022
Page No : 1

Groups Printed- Passenger Vehicles

	Airport Drive Westbound			Terminal Way West Northbound			Airport Drive Eastbound			
Start Time	Left	Thru	App. Total	Left	Right	App. Total	Thru	Right	App. Total	Int. Total
07:00 AM	5	126	131	7	3	10	108	12	120	261
07:15 AM	6	154	160	4	1	5	114	21	135	300
07:30 AM	5	148	153	4	4	8	192	15	207	368
07:45 AM	8	176	184	5	5	10	198	14	212	406
Total	24	604	628	20	13	33	612	62	674	1335
08:00 AM	10	161	171	9	0	9	165	18	183	363
08:15 AM	12	140	152	8	2	10	152	17	169	331
08:30 AM	16	116	132	7	6	13	127	20	147	292
08:45 AM	13	96	109	14	7	21	125	11	136	266
Total	51	513	564	38	15	53	569	66	635	1252
Grand Total	75	1117	1192	58	28	86	1181	128	1309	2587
Apprch %	6.3	93.7		67.4	32.6		90.2	9.8		
Total %	2.9	43.2	46.1	2.2	1.1	3.3	45.7	4.9	50.6	

	Airport Drive Westbound			Terminal Way West Northbound			Airport Drive Eastbound			
Start Time	Left	Thru	App. Total	Left	Right	App. Total	Thru	Right	App. Total	Int. Total
Peak Hour Analysis From 07:30 AM to 08:15 AM - Peak 1 of 1										
Peak Hour for Entire Intersection Begins at 07:30 AM										
07:30 AM	5	148	153	4	4	8	192	15	207	368
07:45 AM	8	**176**	**184**	5	**5**	**10**	**198**	14	**212**	**406**
08:00 AM	10	161	171	**9**	0	9	165	**18**	183	363
08:15 AM	**12**	140	152	8	2	10	152	17	169	331
Total Volume	35	625	660	26	11	37	707	64	771	1468
% App. Total	5.3	94.7		70.3	29.7		91.7	8.3		
PHF	.729	.888	.897	.722	.550	.925	.893	.889	.909	.904

Counts Unlimited, Inc.
PO Box 1178
Corona, CA 92878
(951)268-6268

City of Ontario
N/S: Terminal Way West
E/W: Airport Drive
Weather: Clear

File Name : 01_ONT_Term W_AP AM
Site Code : 00322818
Start Date : 9/20/2022

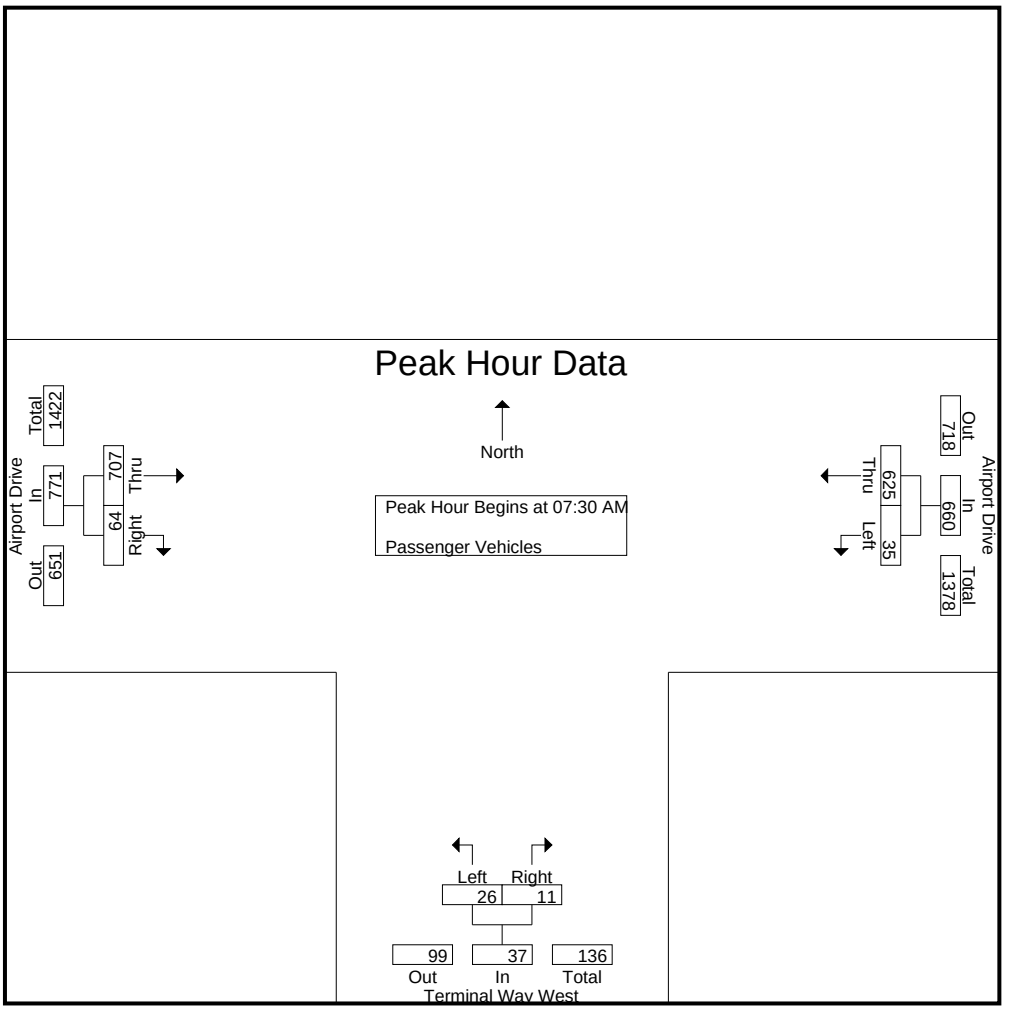

Peak Hour Analysis From 07:30 AM to 08:15 AM - Peak 1 of 1
Peak Hour for Each Approach Begins at:

	07:30 AM			07:30 AM			07:30 AM		
+0 mins.	5	148	153	4	4	8	192	15	207
+15 mins.	8	**176**	**184**	5	**5**	**10**	**198**	14	**212**
+30 mins.	10	161	171	**9**	0	9	165	**18**	183
+45 mins.	**12**	140	152	8	2	10	152	17	169
Total Volume	35	625	660	26	11	37	707	64	771
% App. Total	5.3	94.7		70.3	29.7		91.7	8.3	
PHF	.729	.888	.897	.722	.550	.925	.893	.889	.909

Counts Unlimited, Inc.
PO Box 1178
Corona, CA 92878
(951)268-6268

City of Ontario
N/S: Terminal Way West
E/W: Airport Drive
Weather: Clear

File Name : 01_ONT_Term W_AP AM
Site Code : 00322818
Start Date : 9/20/2022
Page No : 1

Groups Printed- Large 2 Axle Vehicles

	Airport Drive Westbound			Terminal Way West Northbound			Airport Drive Eastbound			
Start Time	Left	Thru	App. Total	Left	Right	App. Total	Thru	Right	App. Total	Int. Total
07:00 AM	4	3	7	1	0	1	8	0	8	16
07:15 AM	3	6	9	0	0	0	4	2	6	15
07:30 AM	4	5	9	0	0	0	3	1	4	13
07:45 AM	4	3	7	0	0	0	7	0	7	14
Total	15	17	32	1	0	1	22	3	25	58
08:00 AM	4	4	8	0	0	0	5	2	7	15
08:15 AM	4	7	11	0	0	0	2	1	3	14
08:30 AM	4	1	5	0	0	0	2	1	3	8
08:45 AM	1	4	5	0	0	0	2	2	4	9
Total	13	16	29	0	0	0	11	6	17	46
Grand Total	28	33	61	1	0	1	33	9	42	104
Apprch %	45.9	54.1		100	0		78.6	21.4		
Total %	26.9	31.7	58.7	1	0	1	31.7	8.7	40.4	

	Airport Drive Westbound			Terminal Way West Northbound			Airport Drive Eastbound			
Start Time	Left	Thru	App. Total	Left	Right	App. Total	Thru	Right	App. Total	Int. Total
Peak Hour Analysis From 07:30 AM to 08:15 AM - Peak 1 of 1										
Peak Hour for Entire Intersection Begins at 07:30 AM										
07:30 AM	**4**	5	9	0	0	0	3	1	4	13
07:45 AM	4	3	7	0	0	0	**7**	0	**7**	14
08:00 AM	4	4	8	0	0	0	5	**2**	7	**15**
08:15 AM	4	**7**	**11**	0	0	0	2	1	3	14
Total Volume	16	19	35	0	0	0	17	4	21	56
% App. Total	45.7	54.3		0	0		81	19		
PHF	1.00	.679	.795	.000	.000	.000	.607	.500	.750	.933

Counts Unlimited, Inc.
PO Box 1178
Corona, CA 92878
(951)268-6268

City of Ontario
N/S: Terminal Way West
E/W: Airport Drive
Weather: Clear

File Name : 01_ONT_Term W_AP AM
Site Code : 00322818
Start Date : 9/20/2022
Page No : 2

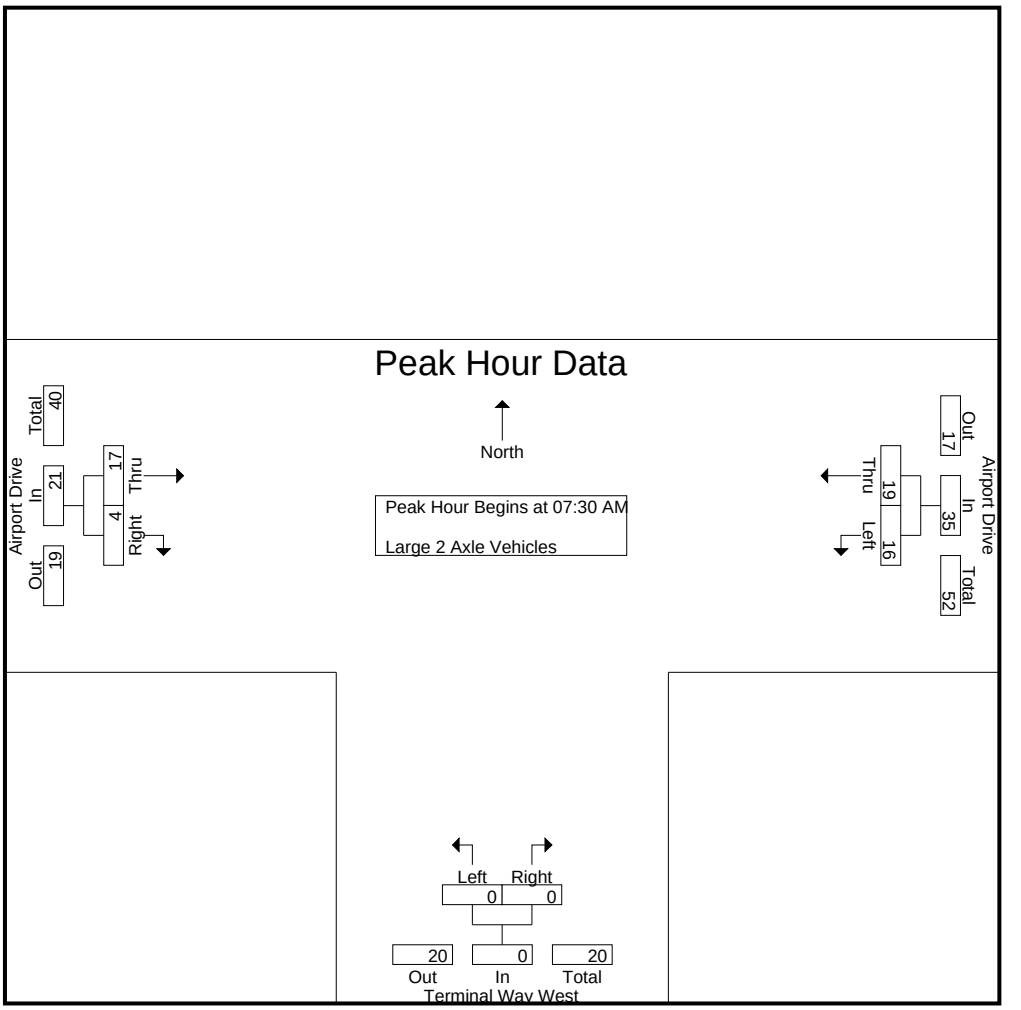

Peak Hour Analysis From 07:30 AM to 08:15 AM - Peak 1 of 1
Peak Hour for Each Approach Begins at:

	07:30 AM			07:30 AM			07:30 AM		
+0 mins.	**4**	5	9	0	0	0	3	1	4
+15 mins.	4	3	7	0	0	0	**7**	0	**7**
+30 mins.	4	4	8	0	0	0	5	**2**	7
+45 mins.	4	**7**	**11**	0	0	0	2	1	3
Total Volume	16	19	35	0	0	0	17	4	21
% App. Total	45.7	54.3		0	0		81	19	
PHF	1.000	.679	.795	.000	.000	.000	.607	.500	.750

Counts Unlimited, Inc.
PO Box 1178
Corona, CA 92878
(951)268-6268

City of Ontario
N/S: Terminal Way West
E/W: Airport Drive
Weather: Clear

File Name : 01_ONT_Term W_AP AM
Site Code : 00322818
Start Date : 9/20/2022
Page No : 1

Groups Printed- 3 Axle Vehicles

	Airport Drive Westbound			Terminal Way West Northbound			Airport Drive Eastbound			
Start Time	Left	Thru	App. Total	Left	Right	App. Total	Thru	Right	App. Total	Int. Total
07:00 AM	1	0	1	0	0	0	1	0	1	2
07:15 AM	0	1	1	0	0	0	2	0	2	3
07:30 AM	0	1	1	0	0	0	2	0	2	3
07:45 AM	0	1	1	0	0	0	2	0	2	3
Total	1	3	4	0	0	0	7	0	7	11
08:00 AM	1	0	1	0	0	0	0	0	0	1
08:15 AM	0	1	1	0	0	0	1	0	1	2
08:30 AM	0	2	2	0	0	0	1	0	1	3
08:45 AM	0	2	2	0	0	0	4	0	4	6
Total	1	5	6	0	0	0	6	0	6	12
Grand Total	2	8	10	0	0	0	13	0	13	23
Apprch %	20	80		0	0		100	0		
Total %	8.7	34.8	43.5	0	0	0	56.5	0	56.5	

	Airport Drive Westbound			Terminal Way West Northbound			Airport Drive Eastbound			
Start Time	Left	Thru	App. Total	Left	Right	App. Total	Thru	Right	App. Total	Int. Total
Peak Hour Analysis From 07:30 AM to 08:15 AM - Peak 1 of 1										
Peak Hour for Entire Intersection Begins at 07:30 AM										
07:30 AM	0	**1**	**1**	0	0	0	**2**	0	**2**	**3**
07:45 AM	0	1	1	0	0	0	2	0	2	3
08:00 AM	**1**	0	1	0	0	0	0	0	0	1
08:15 AM	0	1	1	0	0	0	1	0	1	2
Total Volume	1	3	4	0	0	0	5	0	5	9
% App. Total	25	75		0	0		100	0		
PHF	.250	.750	1.00	.000	.000	.000	.625	.000	.625	.750

Counts Unlimited, Inc.
PO Box 1178
Corona, CA 92878
(951)268-6268

City of Ontario
N/S: Terminal Way West
E/W: Airport Drive
Weather: Clear

File Name : 01_ONT_Term W_AP AM
Site Code : 00322818
Start Date : 9/20/2022

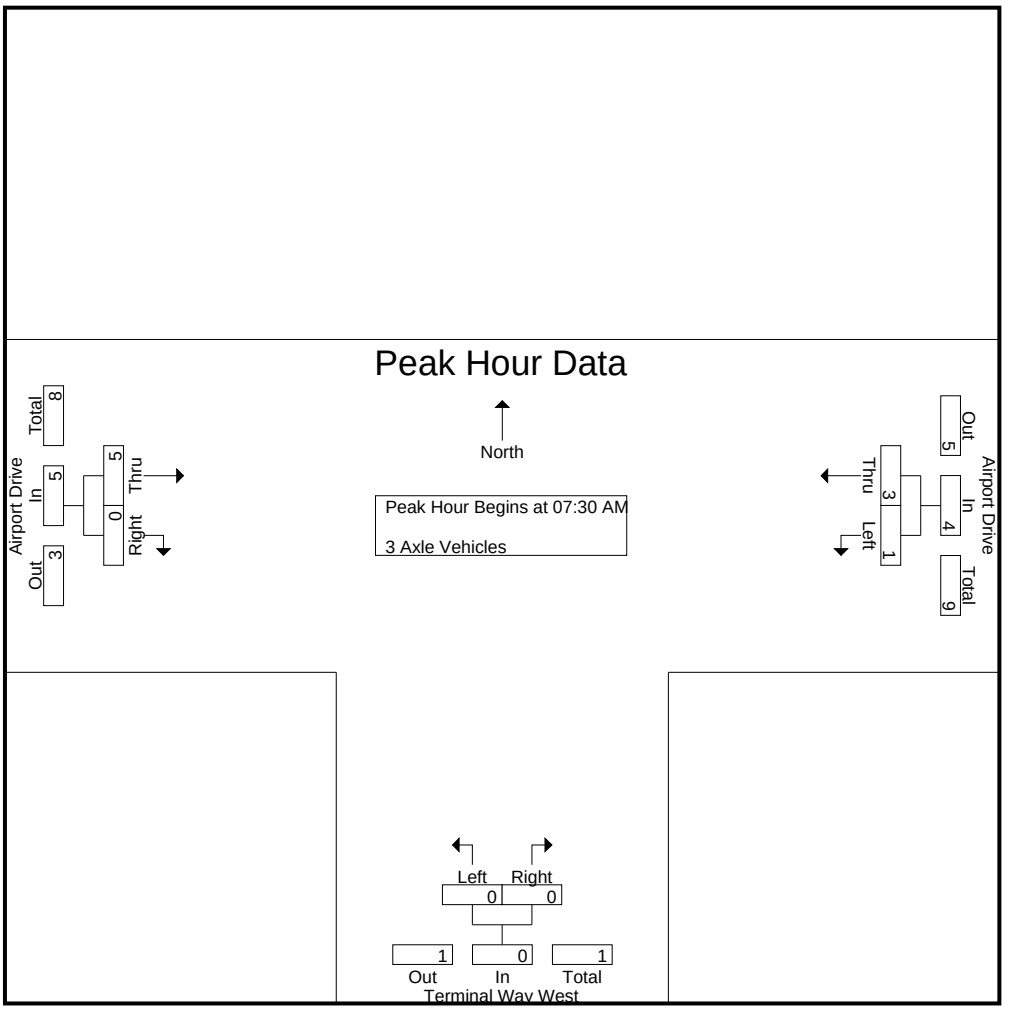

Peak Hour Analysis From 07:30 AM to 08:15 AM - Peak 1 of 1
Peak Hour for Each Approach Begins at:

	07:30 AM			07:30 AM			07:30 AM		
+0 mins.	0	**1**	**1**	0	0	0	**2**	0	**2**
+15 mins.	0	1	1	0	0	0	2	0	2
+30 mins.	**1**	0	1	0	0	0	0	0	0
+45 mins.	0	1	1	0	0	0	1	0	1
Total Volume	1	3	4	0	0	0	5	0	5
% App. Total	25	75		0	0		100	0	
PHF	.250	.750	1.000	.000	.000	.000	.625	.000	.625

Counts Unlimited, Inc.
PO Box 1178
Corona, CA 92878
(951)268-6268

City of Ontario
N/S: Terminal Way West
E/W: Airport Drive
Weather: Clear

File Name : 01_ONT_Term W_AP AM
Site Code : 00322818
Start Date : 9/20/2022
Page No : 1

Groups Printed- 4+ Axle Trucks

	Airport Drive Westbound			Terminal Way West Northbound			Airport Drive Eastbound			
Start Time	Left	Thru	App. Total	Left	Right	App. Total	Thru	Right	App. Total	Int. Total
07:00 AM	0	1	1	0	0	0	0	0	0	1
07:15 AM	0	0	0	0	0	0	1	0	1	1
07:30 AM	0	1	1	0	0	0	0	0	0	1
07:45 AM	0	4	4	0	0	0	1	0	1	5
Total	0	6	6	0	0	0	2	0	2	8
08:00 AM	1	3	4	0	0	0	1	0	1	5
08:15 AM	0	2	2	1	0	1	1	0	1	4
08:30 AM	0	4	4	0	0	0	5	0	5	9
08:45 AM	0	4	4	0	0	0	6	0	6	10
Total	1	13	14	1	0	1	13	0	13	28
Grand Total	1	19	20	1	0	1	15	0	15	36
Apprch %	5	95		100	0		100	0		
Total %	2.8	52.8	55.6	2.8	0	2.8	41.7	0	41.7	

	Airport Drive Westbound			Terminal Way West Northbound			Airport Drive Eastbound			
Start Time	Left	Thru	App. Total	Left	Right	App. Total	Thru	Right	App. Total	Int. Total
Peak Hour Analysis From 07:30 AM to 08:15 AM - Peak 1 of 1										
Peak Hour for Entire Intersection Begins at 07:30 AM										
07:30 AM	0	1	1	0	0	0	0	0	0	1
07:45 AM	0	**4**	**4**	0	0	0	**1**	0	**1**	**5**
08:00 AM	**1**	3	4	0	0	0	1	0	1	5
08:15 AM	0	2	2	**1**	0	**1**	1	0	1	4
Total Volume	1	10	11	1	0	1	3	0	3	15
% App. Total	9.1	90.9		100	0		100	0		
PHF	.250	.625	.688	.250	.000	.250	.750	.000	.750	.750

Counts Unlimited, Inc.
PO Box 1178
Corona, CA 92878
(951)268-6268

City of Ontario
N/S: Terminal Way West
E/W: Airport Drive
Weather: Clear

File Name : 01_ONT_Term W_AP AM
Site Code : 00322818
Start Date : 9/20/2022

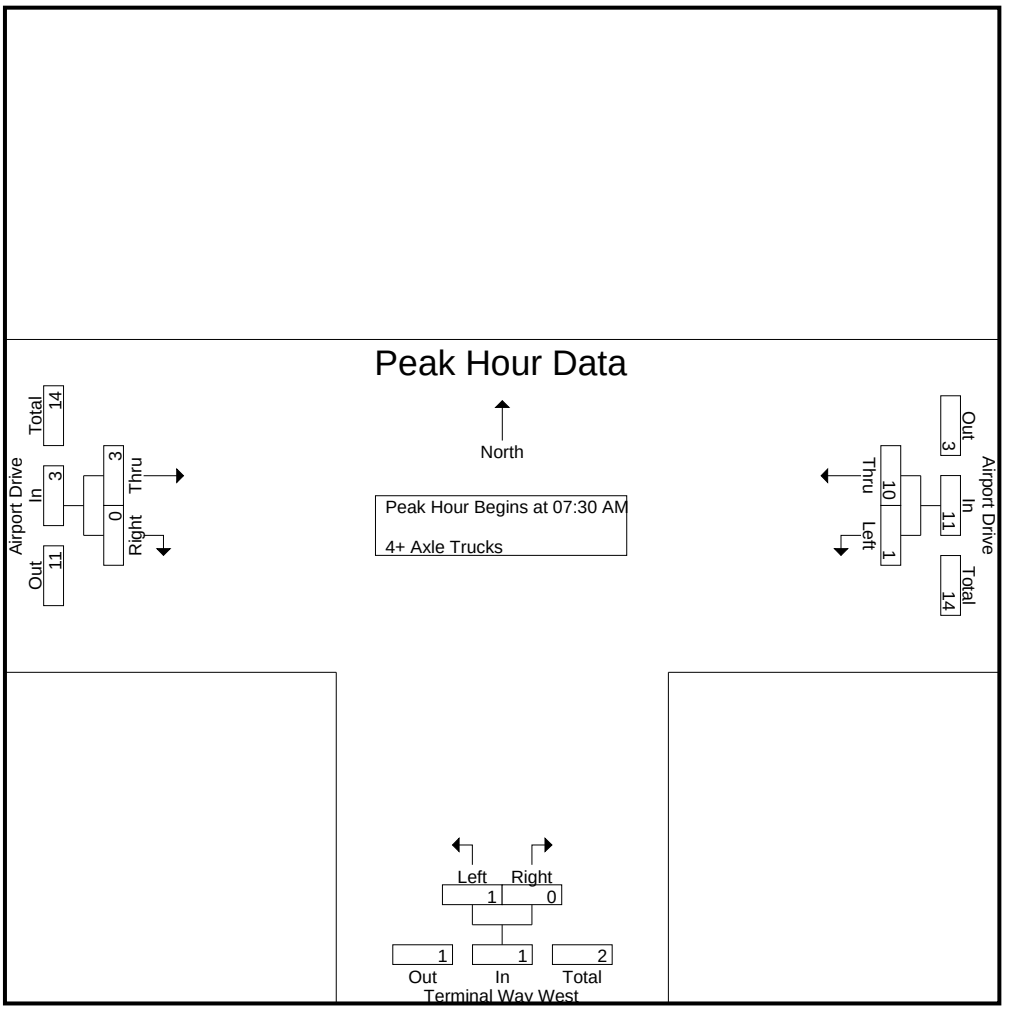

Peak Hour Analysis From 07:30 AM to 08:15 AM - Peak 1 of 1
Peak Hour for Each Approach Begins at:

	07:30 AM			07:30 AM			07:30 AM		
+0 mins.	0	1	1	0	0	0	0	0	0
+15 mins.	0	**4**	**4**	0	0	0	**1**	0	**1**
+30 mins.	**1**	3	4	0	0	0	1	0	1
+45 mins.	0	2	2	**1**	0	**1**	1	0	1
Total Volume	1	10	11	1	0	1	3	0	3
% App. Total	9.1	90.9		100	0		100	0	
PHF	.250	.625	.688	.250	.000	.250	.750	.000	.750

Counts Unlimited, Inc.
PO Box 1178
Corona, CA 92878
(951)268-6268

City of Ontario
N/S: Terminal Way West
E/W: Airport Drive
Weather: Clear

File Name : 01_ONT_Term W_AP PM
Site Code : 00322818
Start Date : 9/20/2022
Page No : 1

Groups Printed- Passenger Vehicles - Large 2 Axle Vehicles - 3 Axle Vehicles - 4+ Axle Trucks

	Airport Drive Westbound			Terminal Way West Northbound			Airport Drive Eastbound			
Start Time	Left	Thru	App. Total	Left	Right	App. Total	Thru	Right	App. Total	Int. Total
04:00 PM	8	168	176	3	3	6	338	21	359	541
04:15 PM	12	194	206	5	7	12	355	34	389	607
04:30 PM	18	173	191	8	15	23	366	28	394	608
04:45 PM	15	175	190	13	10	23	319	21	340	553
Total	53	710	763	29	35	64	1378	104	1482	2309
05:00 PM	12	198	210	10	4	14	312	21	333	557
05:15 PM	11	191	202	8	6	14	310	19	329	545
05:30 PM	11	138	149	5	3	8	327	16	343	500
05:45 PM	7	143	150	7	2	9	269	22	291	450
Total	41	670	711	30	15	45	1218	78	1296	2052
Grand Total	94	1380	1474	59	50	109	2596	182	2778	4361
Apprch %	6.4	93.6		54.1	45.9		93.4	6.6		
Total %	2.2	31.6	33.8	1.4	1.1	2.5	59.5	4.2	63.7	
Passenger Vehicles	77	1291	1368	59	50	109	2464	172	2636	4113
% Passenger Vehicles	81.9	93.6	92.8	100	100	100	94.9	94.5	94.9	94.3
Large 2 Axle Vehicles	17	55	72	0	0	0	67	10	77	149
% Large 2 Axle Vehicles	18.1	4	4.9	0	0	0	2.6	5.5	2.8	3.4
3 Axle Vehicles	0	14	14	0	0	0	23	0	23	37
% 3 Axle Vehicles	0	1	0.9	0	0	0	0.9	0	0.8	0.8
4+ Axle Trucks	0	20	20	0	0	0	42	0	42	62
% 4+ Axle Trucks	0	1.4	1.4	0	0	0	1.6	0	1.5	1.4

	Airport Drive Westbound			Terminal Way West Northbound			Airport Drive Eastbound			
Start Time	Left	Thru	App. Total	Left	Right	App. Total	Thru	Right	App. Total	Int. Total
Peak Hour Analysis From 04:00 PM to 05:45 PM - Peak 1 of 1										
Peak Hour for Entire Intersection Begins at 04:15 PM										
04:15 PM	12	194	206	5	7	12	355	**34**	389	607
04:30 PM	**18**	173	191	8	**15**	**23**	**366**	28	**394**	**608**
04:45 PM	15	175	190	**13**	10	23	319	21	340	553
05:00 PM	12	**198**	**210**	10	4	14	312	21	333	557
Total Volume	57	740	797	36	36	72	1352	104	1456	2325
% App. Total	7.2	92.8		50	50		92.9	7.1		
PHF	.792	.934	.949	.692	.600	.783	.923	.765	.924	.956

Counts Unlimited, Inc.
PO Box 1178
Corona, CA 92878
(951)268-6268

City of Ontario
N/S: Terminal Way West
E/W: Airport Drive
Weather: Clear

File Name : 01_ONT_Term W_AP PM
Site Code : 00322818
Start Date : 9/20/2022

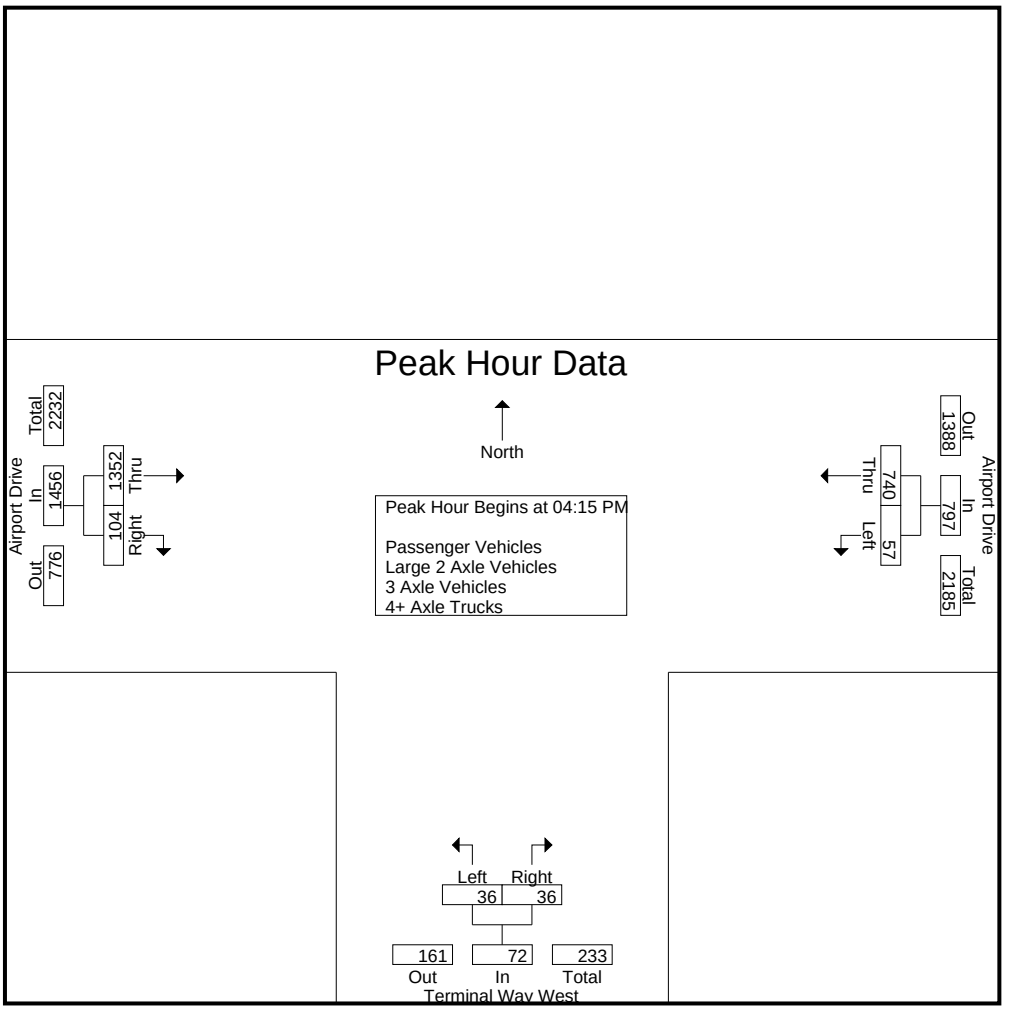

Peak Hour Analysis From 04:00 PM to 05:45 PM - Peak 1 of 1
Peak Hour for Each Approach Begins at:

	04:15 PM			04:30 PM			04:00 PM		
+0 mins.	12	194	206	8	**15**	**23**	338	21	359
+15 mins.	**18**	173	191	**13**	10	23	355	**34**	389
+30 mins.	15	175	190	10	4	14	**366**	28	**394**
+45 mins.	12	**198**	**210**	8	6	14	319	21	340
Total Volume	57	740	797	39	35	74	1378	104	1482
% App. Total	7.2	92.8		52.7	47.3		93	7	
PHF	.792	.934	.949	.750	.583	.804	.941	.765	.940

Counts Unlimited, Inc.
PO Box 1178
Corona, CA 92878
(951)268-6268

City of Ontario
N/S: Terminal Way West
E/W: Airport Drive
Weather: Clear

File Name : 01_ONT_Term W_AP PM
Site Code : 00322818
Start Date : 9/20/2022
Page No : 1

Groups Printed- Passenger Vehicles

	Airport Drive Westbound			Terminal Way West Northbound			Airport Drive Eastbound			
Start Time	Left	Thru	App. Total	Left	Right	App. Total	Thru	Right	App. Total	Int. Total
04:00 PM	8	160	168	3	3	6	328	20	348	522
04:15 PM	11	180	191	5	7	12	329	32	361	564
04:30 PM	14	163	177	8	15	23	342	25	367	567
04:45 PM	13	164	177	13	10	23	302	21	323	523
Total	46	667	713	29	35	64	1301	98	1399	2176
05:00 PM	9	183	192	10	4	14	298	20	318	524
05:15 PM	8	183	191	8	6	14	301	17	318	523
05:30 PM	8	129	137	5	3	8	311	15	326	471
05:45 PM	6	129	135	7	2	9	253	22	275	419
Total	31	624	655	30	15	45	1163	74	1237	1937
Grand Total	77	1291	1368	59	50	109	2464	172	2636	4113
Apprch %	5.6	94.4		54.1	45.9		93.5	6.5		
Total %	1.9	31.4	33.3	1.4	1.2	2.7	59.9	4.2	64.1	

	Airport Drive Westbound			Terminal Way West Northbound			Airport Drive Eastbound			
Start Time	Left	Thru	App. Total	Left	Right	App. Total	Thru	Right	App. Total	Int. Total
Peak Hour Analysis From 04:15 PM to 05:00 PM - Peak 1 of 1										
Peak Hour for Entire Intersection Begins at 04:15 PM										
04:15 PM	11	180	191	5	7	12	329	**32**	361	564
04:30 PM	**14**	163	177	8	**15**	**23**	**342**	25	**367**	**567**
04:45 PM	13	164	177	**13**	10	23	302	21	323	523
05:00 PM	9	**183**	**192**	10	4	14	298	20	318	524
Total Volume	47	690	737	36	36	72	1271	98	1369	2178
% App. Total	6.4	93.6		50	50		92.8	7.2		
PHF	.839	.943	.960	.692	.600	.783	.929	.766	.933	.960

Counts Unlimited, Inc.
PO Box 1178
Corona, CA 92878
(951)268-6268

City of Ontario
N/S: Terminal Way West
E/W: Airport Drive
Weather: Clear

File Name : 01_ONT_Term W_AP PM
Site Code : 00322818
Start Date : 9/20/2022

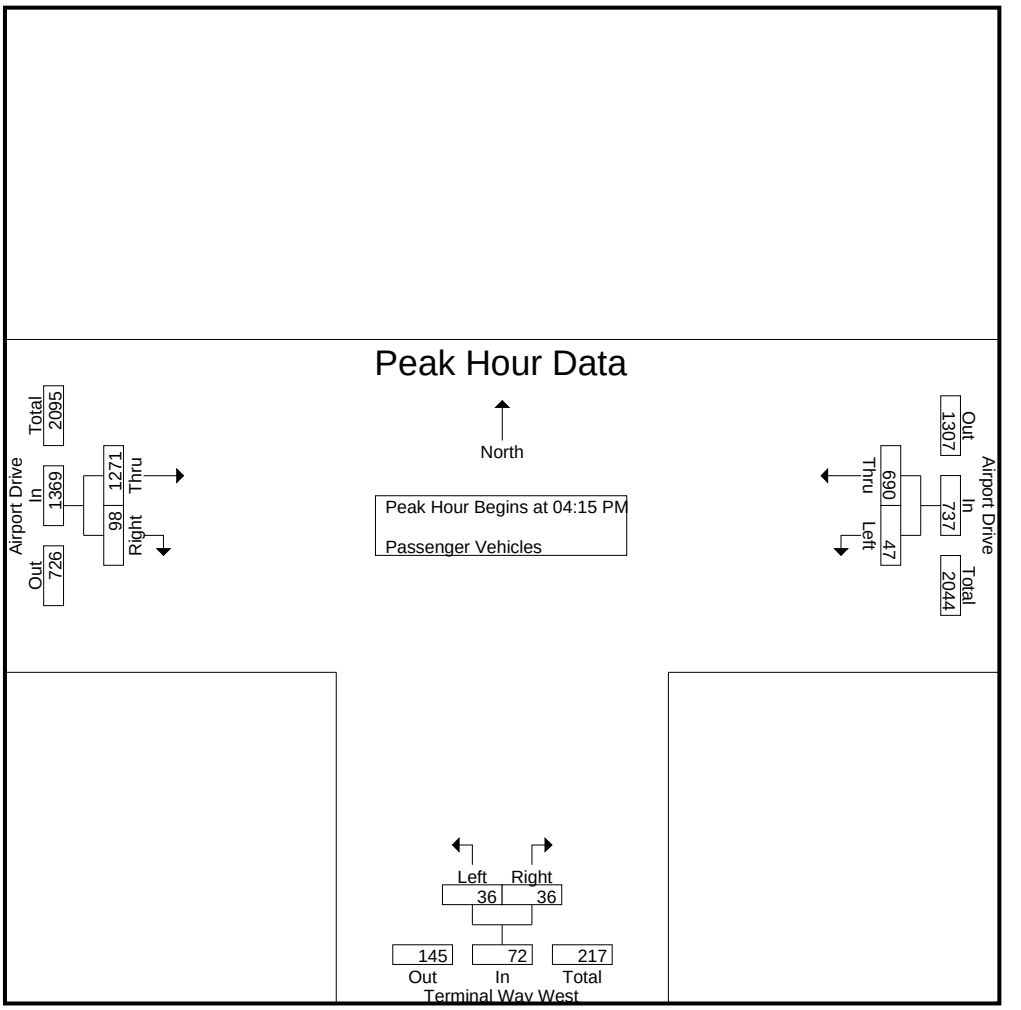

Peak Hour Analysis From 04:15 PM to 05:00 PM - Peak 1 of 1
Peak Hour for Each Approach Begins at:

	04:15 PM			04:15 PM			04:15 PM		
+0 mins.	11	180	191	5	7	12	329	**32**	361
+15 mins.	**14**	163	177	8	**15**	**23**	**342**	25	**367**
+30 mins.	13	164	177	**13**	10	23	302	21	323
+45 mins.	9	**183**	**192**	10	4	14	298	20	318
Total Volume	47	690	737	36	36	72	1271	98	1369
% App. Total	6.4	93.6		50	50		92.8	7.2	
PHF	.839	.943	.960	.692	.600	.783	.929	.766	.933

Counts Unlimited, Inc.
PO Box 1178
Corona, CA 92878
(951)268-6268

City of Ontario
N/S: Terminal Way West
E/W: Airport Drive
Weather: Clear

File Name : 01_ONT_Term W_AP PM
Site Code : 00322818
Start Date : 9/20/2022
Page No : 1

Groups Printed- Large 2 Axle Vehicles

	Airport Drive Westbound			Terminal Way West Northbound			Airport Drive Eastbound			
Start Time	Left	Thru	App. Total	Left	Right	App. Total	Thru	Right	App. Total	Int. Total
04:00 PM	0	5	5	0	0	0	4	1	5	10
04:15 PM	1	6	7	0	0	0	14	2	16	23
04:30 PM	4	4	8	0	0	0	11	3	14	22
04:45 PM	2	6	8	0	0	0	6	0	6	14
Total	7	21	28	0	0	0	35	6	41	69
05:00 PM	3	10	13	0	0	0	6	1	7	20
05:15 PM	3	8	11	0	0	0	6	2	8	19
05:30 PM	3	6	9	0	0	0	9	1	10	19
05:45 PM	1	10	11	0	0	0	11	0	11	22
Total	10	34	44	0	0	0	32	4	36	80
Grand Total	17	55	72	0	0	0	67	10	77	149
Apprch %	23.6	76.4		0	0		87	13		
Total %	11.4	36.9	48.3	0	0	0	45	6.7	51.7	

	Airport Drive Westbound			Terminal Way West Northbound			Airport Drive Eastbound			
Start Time	Left	Thru	App. Total	Left	Right	App. Total	Thru	Right	App. Total	Int. Total
Peak Hour Analysis From 04:15 PM to 05:00 PM - Peak 1 of 1										
Peak Hour for Entire Intersection Begins at 04:15 PM										
04:15 PM	1	6	7	0	0	0	**14**	2	**16**	**23**
04:30 PM	**4**	4	8	0	0	0	11	**3**	14	22
04:45 PM	2	6	8	0	0	0	6	0	6	14
05:00 PM	3	**10**	**13**	0	0	0	6	1	7	20
Total Volume	10	26	36	0	0	0	37	6	43	79
% App. Total	27.8	72.2		0	0		86	14		
PHF	.625	.650	.692	.000	.000	.000	.661	.500	.672	.859

Counts Unlimited, Inc.
PO Box 1178
Corona, CA 92878
(951)268-6268

City of Ontario
N/S: Terminal Way West
E/W: Airport Drive
Weather: Clear

File Name : 01_ONT_Term W_AP PM
Site Code : 00322818
Start Date : 9/20/2022
Page No : 2

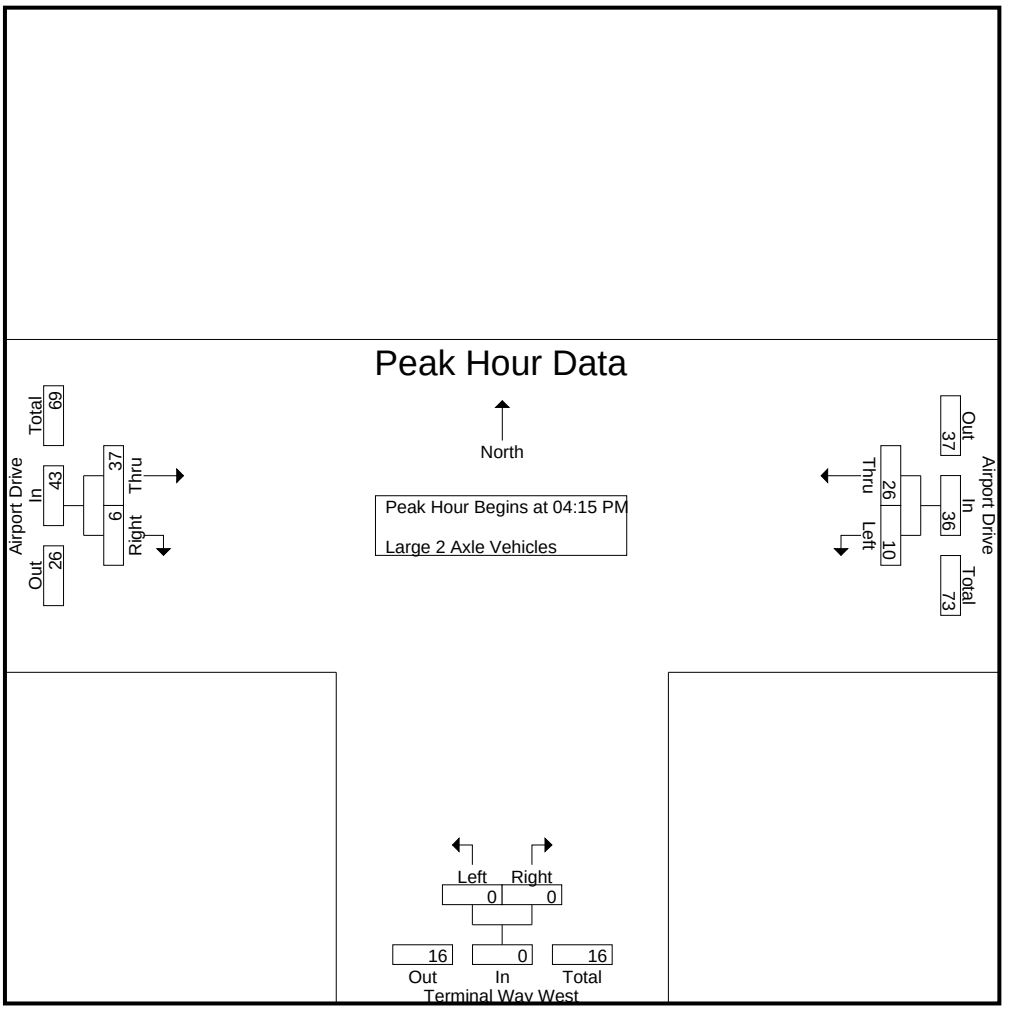

Peak Hour Analysis From 04:15 PM to 05:00 PM - Peak 1 of 1
Peak Hour for Each Approach Begins at:

	04:15 PM			04:15 PM			04:15 PM		
+0 mins.	1	6	7	0	0	0	**14**	2	**16**
+15 mins.	**4**	4	8	0	0	0	11	**3**	14
+30 mins.	2	6	8	0	0	0	6	0	6
+45 mins.	3	**10**	**13**	0	0	0	6	1	7
Total Volume	10	26	36	0	0	0	37	6	43
% App. Total	27.8	72.2		0	0		86	14	
PHF	.625	.650	.692	.000	.000	.000	.661	.500	.672

Counts Unlimited, Inc.
PO Box 1178
Corona, CA 92878
(951)268-6268

City of Ontario
N/S: Terminal Way West
E/W: Airport Drive
Weather: Clear

File Name : 01_ONT_Term W_AP PM
Site Code : 00322818
Start Date : 9/20/2022
Page No : 1

Groups Printed- 3 Axle Vehicles

	Airport Drive Westbound			Terminal Way West Northbound			Airport Drive Eastbound			
Start Time	Left	Thru	App. Total	Left	Right	App. Total	Thru	Right	App. Total	Int. Total
04:00 PM	0	3	3	0	0	0	4	0	4	7
04:15 PM	0	5	5	0	0	0	3	0	3	8
04:30 PM	0	3	3	0	0	0	4	0	4	7
04:45 PM	0	1	1	0	0	0	2	0	2	3
Total	0	12	12	0	0	0	13	0	13	25
05:00 PM	0	1	1	0	0	0	5	0	5	6
05:15 PM	0	0	0	0	0	0	2	0	2	2
05:30 PM	0	0	0	0	0	0	3	0	3	3
05:45 PM	0	1	1	0	0	0	0	0	0	1
Total	0	2	2	0	0	0	10	0	10	12
Grand Total	0	14	14	0	0	0	23	0	23	37
Apprch %	0	100		0	0		100	0		
Total %	0	37.8	37.8	0	0	0	62.2	0	62.2	

	Airport Drive Westbound			Terminal Way West Northbound			Airport Drive Eastbound			
Start Time	Left	Thru	App. Total	Left	Right	App. Total	Thru	Right	App. Total	Int. Total
Peak Hour Analysis From 04:15 PM to 05:00 PM - Peak 1 of 1										
Peak Hour for Entire Intersection Begins at 04:15 PM										
04:15 PM	0	**5**	**5**	0	0	0	3	0	3	**8**
04:30 PM	0	3	3	0	0	0	4	0	4	7
04:45 PM	0	1	1	0	0	0	2	0	2	3
05:00 PM	0	1	1	0	0	0	**5**	0	**5**	6
Total Volume	0	10	10	0	0	0	14	0	14	24
% App. Total	0	100		0	0		100	0		
PHF	.000	.500	.500	.000	.000	.000	.700	.000	.700	.750

Counts Unlimited, Inc.
PO Box 1178
Corona, CA 92878
(951)268-6268

City of Ontario
N/S: Terminal Way West
E/W: Airport Drive
Weather: Clear

File Name : 01_ONT_Term W_AP PM
Site Code : 00322818
Start Date : 9/20/2022
Page No : 2

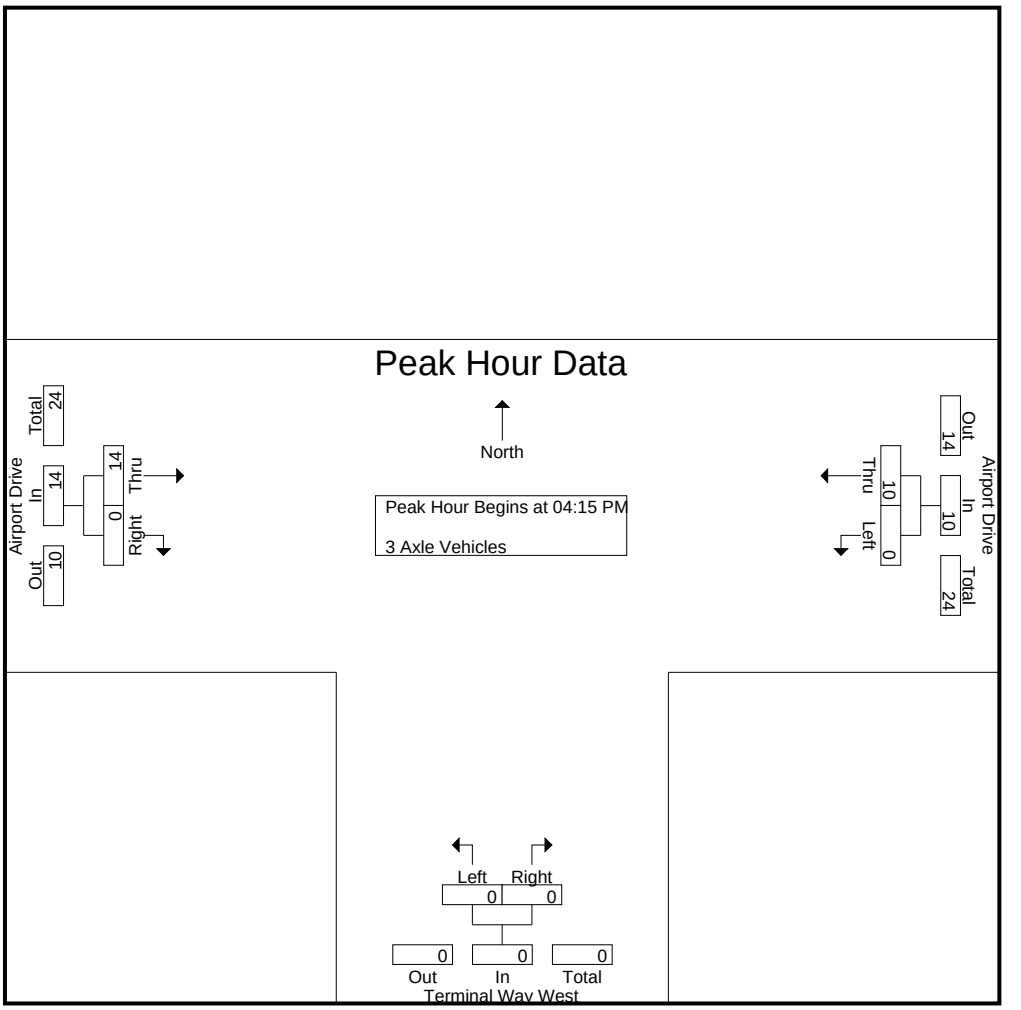

Peak Hour Analysis From 04:15 PM to 05:00 PM - Peak 1 of 1
Peak Hour for Each Approach Begins at:

	04:15 PM			04:15 PM			04:15 PM		
+0 mins.	0	**5**	**5**	0	0	0	3	0	3
+15 mins.	0	3	3	0	0	0	4	0	4
+30 mins.	0	1	1	0	0	0	2	0	2
+45 mins.	0	1	1	0	0	0	**5**	0	**5**
Total Volume	0	10	10	0	0	0	14	0	14
% App. Total	0	100		0	0		100	0	
PHF	.000	.500	.500	.000	.000	.000	.700	.000	.700

Counts Unlimited, Inc.
PO Box 1178
Corona, CA 92878
(951)268-6268

City of Ontario
N/S: Terminal Way West
E/W: Airport Drive
Weather: Clear

File Name : 01_ONT_Term W_AP PM
Site Code : 00322818
Start Date : 9/20/2022
Page No : 1

Groups Printed- 4+ Axle Trucks

	Airport Drive Westbound			Terminal Way West Northbound			Airport Drive Eastbound			
Start Time	Left	Thru	App. Total	Left	Right	App. Total	Thru	Right	App. Total	Int. Total
04:00 PM	0	0	0	0	0	0	2	0	2	2
04:15 PM	0	3	3	0	0	0	9	0	9	12
04:30 PM	0	3	3	0	0	0	9	0	9	12
04:45 PM	0	4	4	0	0	0	9	0	9	13
Total	0	10	10	0	0	0	29	0	29	39
05:00 PM	0	4	4	0	0	0	3	0	3	7
05:15 PM	0	0	0	0	0	0	1	0	1	1
05:30 PM	0	3	3	0	0	0	4	0	4	7
05:45 PM	0	3	3	0	0	0	5	0	5	8
Total	0	10	10	0	0	0	13	0	13	23
Grand Total	0	20	20	0	0	0	42	0	42	62
Apprch %	0	100		0	0		100	0		
Total %	0	32.3	32.3	0	0	0	67.7	0	67.7	

	Airport Drive Westbound			Terminal Way West Northbound			Airport Drive Eastbound			
Start Time	Left	Thru	App. Total	Left	Right	App. Total	Thru	Right	App. Total	Int. Total
Peak Hour Analysis From 04:15 PM to 05:00 PM - Peak 1 of 1										
Peak Hour for Entire Intersection Begins at 04:15 PM										
04:15 PM	0	3	3	0	0	0	**9**	0	**9**	12
04:30 PM	0	3	3	0	0	0	9	0	9	12
04:45 PM	0	**4**	**4**	0	0	0	9	0	9	**13**
05:00 PM	0	4	4	0	0	0	3	0	3	7
Total Volume	0	14	14	0	0	0	30	0	30	44
% App. Total	0	100		0	0		100	0		
PHF	.000	.875	.875	.000	.000	.000	.833	.000	.833	.846

Counts Unlimited, Inc.
PO Box 1178
Corona, CA 92878
(951)268-6268

City of Ontario
N/S: Terminal Way West
E/W: Airport Drive
Weather: Clear

File Name : 01_ONT_Term W_AP PM
Site Code : 00322818
Start Date : 9/20/2022
Page No : 2

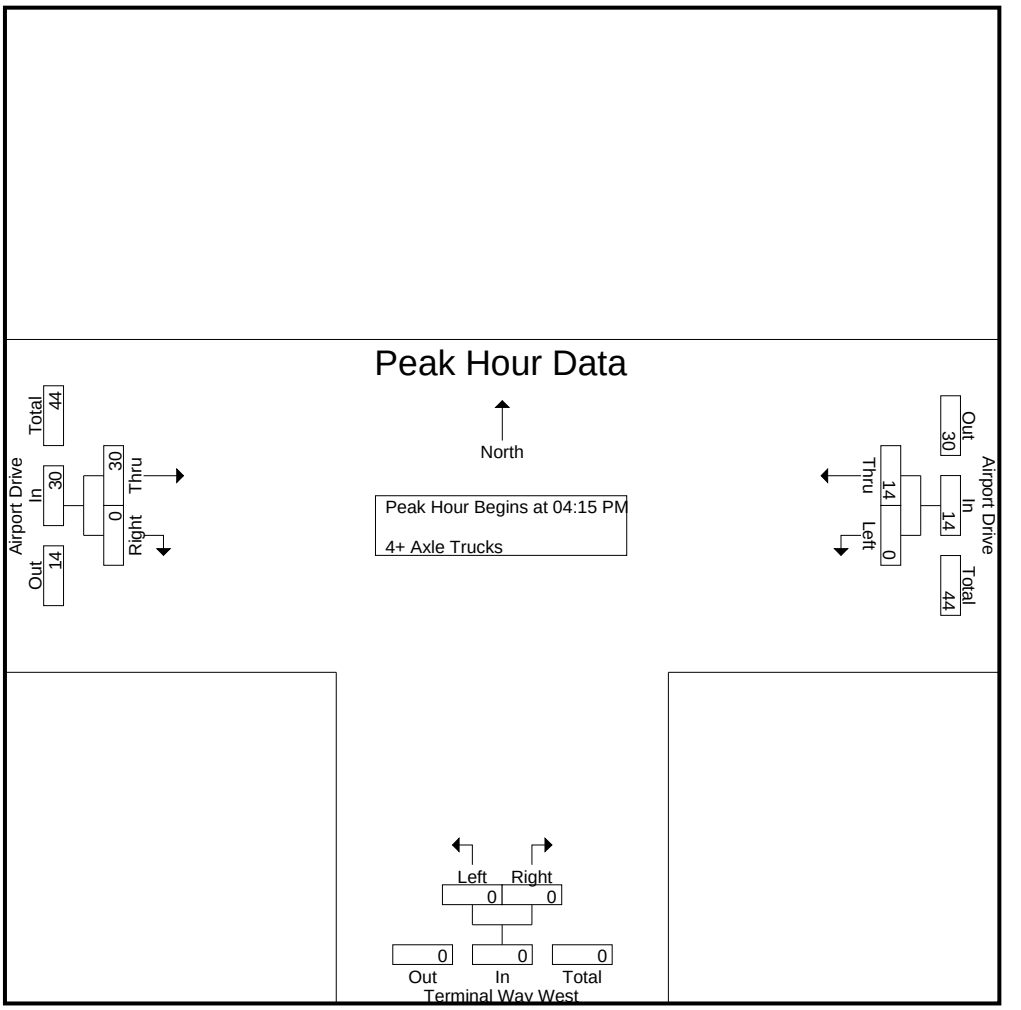

Peak Hour Analysis From 04:15 PM to 05:00 PM - Peak 1 of 1
Peak Hour for Each Approach Begins at:

	04:15 PM			04:15 PM			04:15 PM		
+0 mins.	0	3	3	0	0	0	**9**	0	**9**
+15 mins.	0	3	3	0	0	0	9	0	9
+30 mins.	0	**4**	**4**	0	0	0	9	0	9
+45 mins.	0	4	4	0	0	0	3	0	3
Total Volume	0	14	14	0	0	0	30	0	30
% App. Total	0	100		0	0		100	0	
PHF	.000	.875	.875	.000	.000	.000	.833	.000	.833

Location: Ontario
N/S: Terminal Way West
E/W: Airport Drive

Date: 9/20/2022
Day: Tuesday

PEDESTRIANS

	North Leg Dead End	East Leg Airport Drive	South Leg Terminal Way West	West Leg Airport Drive	
	Pedestrians	Pedestrians	Pedestrians	Pedestrians	
7:00 AM	0	0	0	0	0
7:15 AM	0	0	0	0	0
7:30 AM	0	0	0	0	0
7:45 AM	0	0	0	0	0
8:00 AM	0	0	0	0	0
8:15 AM	0	0	0	0	0
8:30 AM	0	0	0	0	0
8:45 AM	0	0	0	0	0
TOTAL VOLUMES:	0	0	0	0	0

	North Leg Dead End	East Leg Airport Drive	South Leg Terminal Way West	West Leg Airport Drive	
	Pedestrians	Pedestrians	Pedestrians	Pedestrians	
4:00 PM	0	0	0	0	0
4:15 PM	0	0	0	0	0
4:30 PM	0	0	0	0	0
4:45 PM	0	0	0	1	1
5:00 PM	0	0	0	1	1
5:15 PM	0	0	0	0	0
5:30 PM	0	0	0	0	0
5:45 PM	0	0	0	0	0
TOTAL VOLUMES:	0	0	0	2	2

Counts Unlimited, Inc.
PO Box 1178
Corona, CA 92878
951-268-6268

Location: Ontario
N/S: Terminal Way West
E/W: Airport Drive

Date: 9/20/2022
Day: Tuesday

BICYCLES

	Southbound Dead End			Westbound Airport Drive			Northbound Terminal Way West			Eastbound Airport Drive			
	Left	Thru	Right	Left	Thru	Right	Left	Thru	Right	Left	Thru	Right	
7:00 AM	0	0	0	0	0	0	0	0	0	0	0	0	0
7:15 AM	0	0	0	0	0	0	0	0	0	0	0	0	0
7:30 AM	0	0	0	0	0	0	0	0	0	0	0	0	0
7:45 AM	0	0	0	0	0	0	0	0	0	0	0	0	0
8:00 AM	0	0	0	0	0	0	0	0	0	0	0	0	0
8:15 AM	0	0	0	0	0	0	0	0	0	0	0	0	0
8:30 AM	0	0	0	0	0	0	0	0	0	0	0	0	0
8:45 AM	0	0	0	0	0	0	0	0	0	0	0	0	0
TOTAL VOLUMES:	0	0	0	0	0	0	0	0	0	0	0	0	0

	Southbound Dead End			Westbound Airport Drive			Northbound Terminal Way West			Eastbound Airport Drive			
	Left	Thru	Right	Left	Thru	Right	Left	Thru	Right	Left	Thru	Right	
4:00 PM	0	0	0	0	1	0	0	0	0	0	0	0	1
4:15 PM	0	0	0	0	0	0	0	0	0	0	0	0	0
4:30 PM	0	0	0	0	0	0	0	0	0	0	0	0	0
4:45 PM	0	0	0	0	0	0	0	0	0	0	0	0	0
5:00 PM	0	0	0	0	0	0	0	0	0	0	0	0	0
5:15 PM	0	0	0	0	0	0	0	0	0	0	0	0	0
5:30 PM	0	0	0	0	0	0	0	0	0	0	0	0	0
5:45 PM	0	0	0	0	0	0	0	0	0	0	0	0	0
TOTAL VOLUMES:	0	0	0	0	1	0	0	0	0	0	0	0	1

Counts Unlimited, Inc.
PO Box 1178
Corona, CA 92878
951-268-6268

Counts Unlimited, Inc.
PO Box 1178
Corona, CA 92878
(951)268-6268

City of Ontario
N/S: Archibald Avenue
E/W: Airport Drive
Weather: Clear

File Name : 04_ONT_Arch_AP AM
Site Code : 00322818
Start Date : 9/20/2022
Page No : 1

Groups Printed- Passenger Vehicles - Large 2 Axle Vehicles - 3 Axle Vehicles - 4+ Axle Trucks

	Archibald Avenue Southbound				Airport Drive Westbound				Archibald Avenue Northbound				Airport Drive Eastbound				
Start Time	Left	Thru	Right	App. Total	Left	Thru	Right	App. Total	Left	Thru	Right	App. Total	Left	Thru	Right	App. Total	Int. Total
07:00 AM	48	31	80	159	14	57	49	120	1	2	4	7	64	64	0	128	414
07:15 AM	53	14	92	159	18	72	40	130	1	4	2	7	63	59	0	122	418
07:30 AM	62	19	104	185	14	63	72	149	6	3	4	13	104	93	2	199	546
07:45 AM	77	24	108	209	13	89	90	192	3	8	4	15	109	95	7	211	627
Total	240	88	384	712	59	281	251	591	11	17	14	42	340	311	9	660	2005
08:00 AM	46	22	103	171	18	75	80	173	4	10	2	16	96	73	10	179	539
08:15 AM	63	43	84	190	7	78	84	169	5	9	2	16	106	61	1	168	543
08:30 AM	39	27	68	134	23	67	84	174	7	7	2	16	90	54	4	148	472
08:45 AM	45	58	58	161	15	58	75	148	5	10	3	18	91	43	5	139	466
Total	193	150	313	656	63	278	323	664	21	36	9	66	383	231	20	634	2020
Grand Total	433	238	697	1368	122	559	574	1255	32	53	23	108	723	542	29	1294	4025
Apprch %	31.7	17.4	51		9.7	44.5	45.7		29.6	49.1	21.3		55.9	41.9	2.2		
Total %	10.8	5.9	17.3	34	3	13.9	14.3	31.2	0.8	1.3	0.6	2.7	18	13.5	0.7	32.1	
Passenger Vehicles	418	238	675	1331	117	492	547	1156	32	53	23	108	692	513	29	1234	3829
% Passenger Vehicles	96.5	100	96.8	97.3	95.9	88	95.3	92.1	100	100	100	100	95.7	94.6	100	95.4	95.1
Large 2 Axle Vehicles	5	0	14	19	4	45	14	63	0	0	0	0	13	18	0	31	113
% Large 2 Axle Vehicles	1.2	0	2	1.4	3.3	8.1	2.4	5	0	0	0	0	1.8	3.3	0	2.4	2.8
3 Axle Vehicles	2	0	3	5	1	8	2	11	0	0	0	0	7	7	0	14	30
% 3 Axle Vehicles	0.5	0	0.4	0.4	0.8	1.4	0.3	0.9	0	0	0	0	1	1.3	0	1.1	0.7
4+ Axle Trucks	8	0	5	13	0	14	11	25	0	0	0	0	11	4	0	15	53
% 4+ Axle Trucks	1.8	0	0.7	1	0	2.5	1.9	2	0	0	0	0	1.5	0.7	0	1.2	1.3

	Archibald Avenue Southbound				Airport Drive Westbound				Archibald Avenue Northbound				Airport Drive Eastbound				
Start Time	Left	Thru	Right	App. Total	Left	Thru	Right	App. Total	Left	Thru	Right	App. Total	Left	Thru	Right	App. Total	Int. Total
Peak Hour Analysis From 07:00 AM to 08:45 AM - Peak 1 of 1																	
Peak Hour for Entire Intersection Begins at 07:30 AM																	
07:30 AM	62	19	104	185	14	63	72	149	**6**	3	**4**	13	104	93	2	199	546
07:45 AM	**77**	24	**108**	**209**	13	**89**	**90**	**192**	3	8	4	15	**109**	**95**	7	**211**	**627**
08:00 AM	46	22	103	171	**18**	75	80	173	4	**10**	2	**16**	96	73	**10**	179	539
08:15 AM	63	**43**	84	190	7	78	84	169	5	9	2	16	106	61	1	168	543
Total Volume	248	108	399	755	52	305	326	683	18	30	12	60	415	322	20	757	2255
% App. Total	32.8	14.3	52.8		7.6	44.7	47.7		30	50	20		54.8	42.5	2.6		
PHF	.805	.628	.924	.903	.722	.857	.906	.889	.750	.750	.750	.938	.952	.847	.500	.897	.899

Counts Unlimited, Inc.
PO Box 1178
Corona, CA 92878
(951)268-6268

City of Ontario
N/S: Archibald Avenue
E/W: Airport Drive
Weather: Clear

File Name : 04_ONT_Arch_AP AM
Site Code : 00322818
Start Date : 9/20/2022
Page No : 2

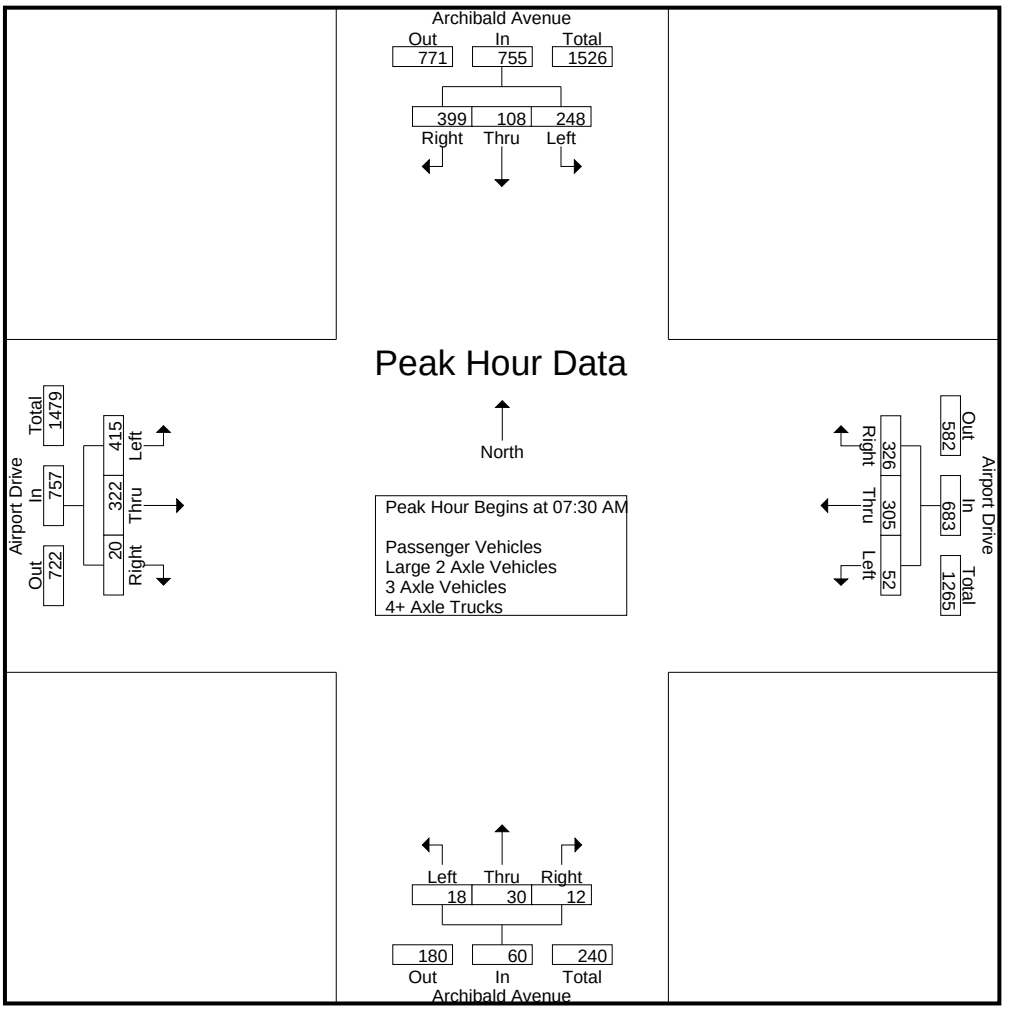

Peak Hour Analysis From 07:00 AM to 08:45 AM - Peak 1 of 1
Peak Hour for Each Approach Begins at:

	07:30 AM				07:45 AM				08:00 AM				07:30 AM			
+0 mins.	62	19	104	185	13	**89**	**90**	**192**	4	**10**	2	16	104	93	2	199
+15 mins.	**77**	24	**108**	**209**	18	75	80	173	5	9	2	16	**109**	**95**	7	**211**
+30 mins.	46	22	103	171	7	78	84	169	**7**	7	2	16	96	73	**10**	179
+45 mins.	63	**43**	84	190	**23**	67	84	174	5	10	**3**	**18**	106	61	1	168
Total Volume	248	108	399	755	61	309	338	708	21	36	9	66	415	322	20	757
% App. Total	32.8	14.3	52.8		8.6	43.6	47.7		31.8	54.5	13.6		54.8	42.5	2.6	
PHF	.805	.628	.924	.903	.663	.868	.939	.922	.750	.900	.750	.917	.952	.847	.500	.897

Counts Unlimited, Inc.
PO Box 1178
Corona, CA 92878
(951)268-6268

City of Ontario
N/S: Archibald Avenue
E/W: Airport Drive
Weather: Clear

File Name : 04_ONT_Arch_AP AM
Site Code : 00322818
Start Date : 9/20/2022
Page No : 1

Groups Printed- Passenger Vehicles

	Archibald Avenue Southbound				Airport Drive Westbound				Archibald Avenue Northbound				Airport Drive Eastbound				
Start Time	Left	Thru	Right	App. Total	Left	Thru	Right	App. Total	Left	Thru	Right	App. Total	Left	Thru	Right	App. Total	Int. Total
07:00 AM	45	31	78	154	11	50	48	109	1	2	4	7	59	59	0	118	388
07:15 AM	50	14	89	153	17	66	37	120	1	4	2	7	59	57	0	116	396
07:30 AM	62	19	102	183	14	53	71	138	6	3	4	13	103	89	2	194	528
07:45 AM	76	24	105	205	13	80	86	179	3	8	4	15	104	91	7	202	601
Total	233	88	374	695	55	249	242	546	11	17	14	42	325	296	9	630	1913
08:00 AM	42	22	101	165	18	66	73	157	4	10	2	16	95	68	10	173	511
08:15 AM	63	43	80	186	7	67	81	155	5	9	2	16	102	60	1	163	520
08:30 AM	36	27	64	127	23	62	81	166	7	7	2	16	85	51	4	140	449
08:45 AM	44	58	56	158	14	48	70	132	5	10	3	18	85	38	5	128	436
Total	185	150	301	636	62	243	305	610	21	36	9	66	367	217	20	604	1916
Grand Total	418	238	675	1331	117	492	547	1156	32	53	23	108	692	513	29	1234	3829
Apprch %	31.4	17.9	50.7		10.1	42.6	47.3		29.6	49.1	21.3		56.1	41.6	2.4		
Total %	10.9	6.2	17.6	34.8	3.1	12.8	14.3	30.2	0.8	1.4	0.6	2.8	18.1	13.4	0.8	32.2	

	Archibald Avenue Southbound				Airport Drive Westbound				Archibald Avenue Northbound				Airport Drive Eastbound				
Start Time	Left	Thru	Right	App. Total	Left	Thru	Right	App. Total	Left	Thru	Right	App. Total	Left	Thru	Right	App. Total	Int. Total
Peak Hour Analysis From 07:30 AM to 08:15 AM - Peak 1 of 1																	
Peak Hour for Entire Intersection Begins at 07:30 AM																	
07:30 AM	62	19	102	183	14	53	71	138	**6**	3	**4**	13	103	89	2	194	528
07:45 AM	**76**	24	**105**	**205**	13	**80**	**86**	**179**	3	8	4	15	**104**	**91**	7	**202**	**601**
08:00 AM	42	22	101	165	**18**	66	73	157	4	**10**	2	**16**	95	68	**10**	173	511
08:15 AM	63	**43**	80	186	7	67	81	155	5	9	2	16	102	60	1	163	520
Total Volume	243	108	388	739	52	266	311	629	18	30	12	60	404	308	20	732	2160
% App. Total	32.9	14.6	52.5		8.3	42.3	49.4		30	50	20		55.2	42.1	2.7		
PHF	.799	.628	.924	.901	.722	.831	.904	.878	.750	.750	.750	.938	.971	.846	.500	.906	.899

Counts Unlimited, Inc.
PO Box 1178
Corona, CA 92878
(951)268-6268

City of Ontario
N/S: Archibald Avenue
E/W: Airport Drive
Weather: Clear

File Name : 04_ONT_Arch_AP AM
Site Code : 00322818
Start Date : 9/20/2022
Page No : 2

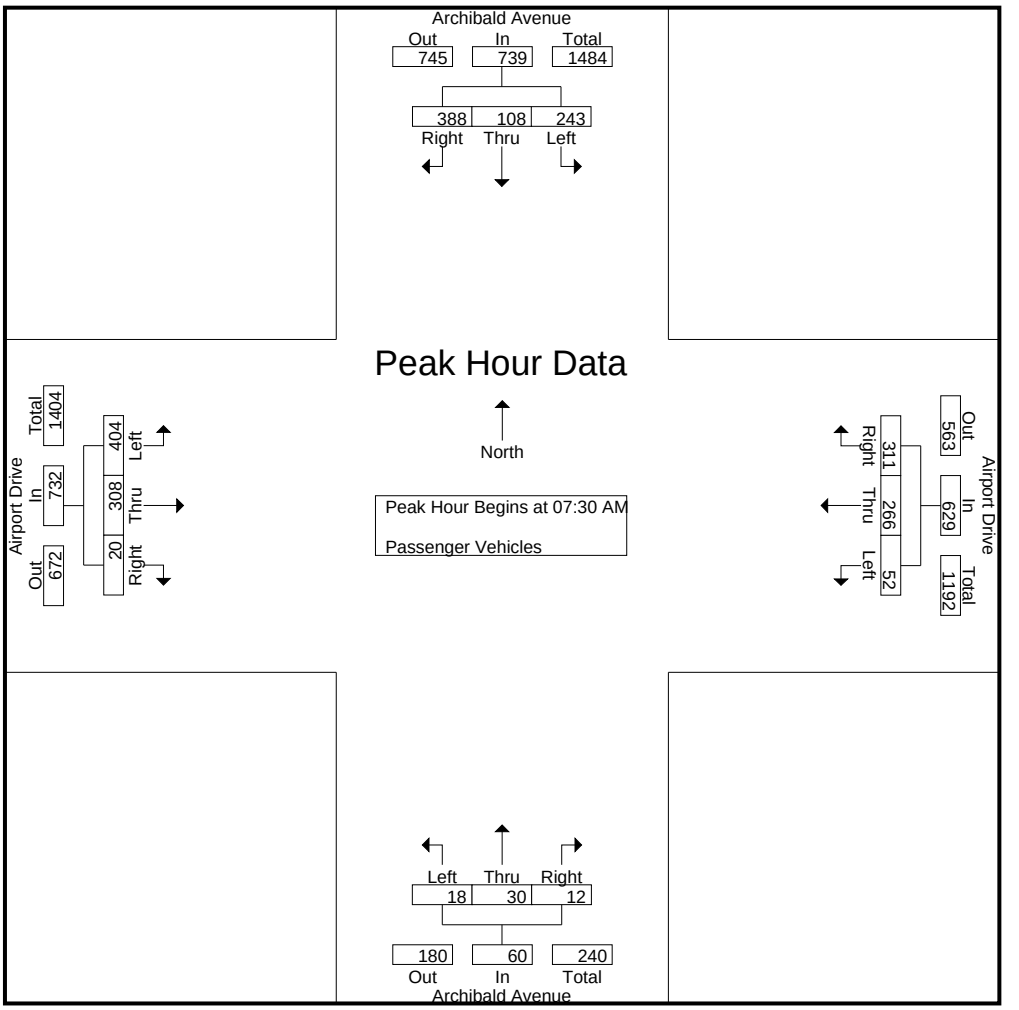

Peak Hour Analysis From 07:30 AM to 08:15 AM - Peak 1 of 1
Peak Hour for Each Approach Begins at:

	07:30 AM				07:30 AM				07:30 AM				07:30 AM			
+0 mins.	62	19	102	183	14	53	71	138	**6**	3	**4**	13	103	89	2	194
+15 mins.	**76**	24	**105**	**205**	13	**80**	**86**	**179**	3	8	4	15	**104**	**91**	7	**202**
+30 mins.	42	22	101	165	**18**	66	73	157	4	**10**	2	**16**	95	68	**10**	173
+45 mins.	63	**43**	80	186	7	67	81	155	5	9	2	16	102	60	1	163
Total Volume	243	108	388	739	52	266	311	629	18	30	12	60	404	308	20	732
% App. Total	32.9	14.6	52.5		8.3	42.3	49.4		30	50	20		55.2	42.1	2.7	
PHF	.799	.628	.924	.901	.722	.831	.904	.878	.750	.750	.750	.938	.971	.846	.500	.906

Counts Unlimited, Inc.
PO Box 1178
Corona, CA 92878
(951)268-6268

City of Ontario
N/S: Archibald Avenue
E/W: Airport Drive
Weather: Clear

File Name : 04_ONT_Arch_AP AM
Site Code : 00322818
Start Date : 9/20/2022
Page No : 1

Groups Printed- Large 2 Axle Vehicles

	Archibald Avenue Southbound				Airport Drive Westbound				Archibald Avenue Northbound				Airport Drive Eastbound				
Start Time	Left	Thru	Right	App. Total	Left	Thru	Right	App. Total	Left	Thru	Right	App. Total	Left	Thru	Right	App. Total	Int. Total
07:00 AM	1	0	2	3	2	5	1	8	0	0	0	0	2	4	0	6	17
07:15 AM	2	0	2	4	1	6	1	8	0	0	0	0	1	1	0	2	14
07:30 AM	0	0	2	2	0	8	0	8	0	0	0	0	1	3	0	4	14
07:45 AM	1	0	1	2	0	5	2	7	0	0	0	0	2	3	0	5	14
Total	4	0	7	11	3	24	4	31	0	0	0	0	6	11	0	17	59
08:00 AM	1	0	1	2	0	6	4	10	0	0	0	0	1	4	0	5	17
08:15 AM	0	0	3	3	0	8	1	9	0	0	0	0	3	1	0	4	16
08:30 AM	0	0	2	2	0	2	2	4	0	0	0	0	1	1	0	2	8
08:45 AM	0	0	1	1	1	5	3	9	0	0	0	0	2	1	0	3	13
Total	1	0	7	8	1	21	10	32	0	0	0	0	7	7	0	14	54
Grand Total	5	0	14	19	4	45	14	63	0	0	0	0	13	18	0	31	113
Apprch %	26.3	0	73.7		6.3	71.4	22.2		0	0	0		41.9	58.1	0		
Total %	4.4	0	12.4	16.8	3.5	39.8	12.4	55.8	0	0	0	0	11.5	15.9	0	27.4	

	Archibald Avenue Southbound				Airport Drive Westbound				Archibald Avenue Northbound				Airport Drive Eastbound				
Start Time	Left	Thru	Right	App. Total	Left	Thru	Right	App. Total	Left	Thru	Right	App. Total	Left	Thru	Right	App. Total	Int. Total
Peak Hour Analysis From 07:30 AM to 08:15 AM - Peak 1 of 1																	
Peak Hour for Entire Intersection Begins at 07:30 AM																	
07:30 AM	0	0	2	2	0	**8**	0	8	0	0	0	0	1	3	0	4	14
07:45 AM	**1**	0	1	2	0	5	2	7	0	0	0	0	2	3	0	**5**	14
08:00 AM	1	0	1	2	0	6	**4**	**10**	0	0	0	0	1	**4**	0	5	**17**
08:15 AM	0	0	**3**	**3**	0	8	1	9	0	0	0	0	**3**	1	0	4	16
Total Volume	2	0	7	9	0	27	7	34	0	0	0	0	7	11	0	18	61
% App. Total	22.2	0	77.8		0	79.4	20.6		0	0	0		38.9	61.1	0		
PHF	.500	.000	.583	.750	.000	.844	.438	.850	.000	.000	.000	.000	.583	.688	.000	.900	.897

Counts Unlimited, Inc.
PO Box 1178
Corona, CA 92878
(951)268-6268

City of Ontario
N/S: Archibald Avenue
E/W: Airport Drive
Weather: Clear

File Name : 04_ONT_Arch_AP AM
Site Code : 00322818
Start Date : 9/20/2022
Page No : 2

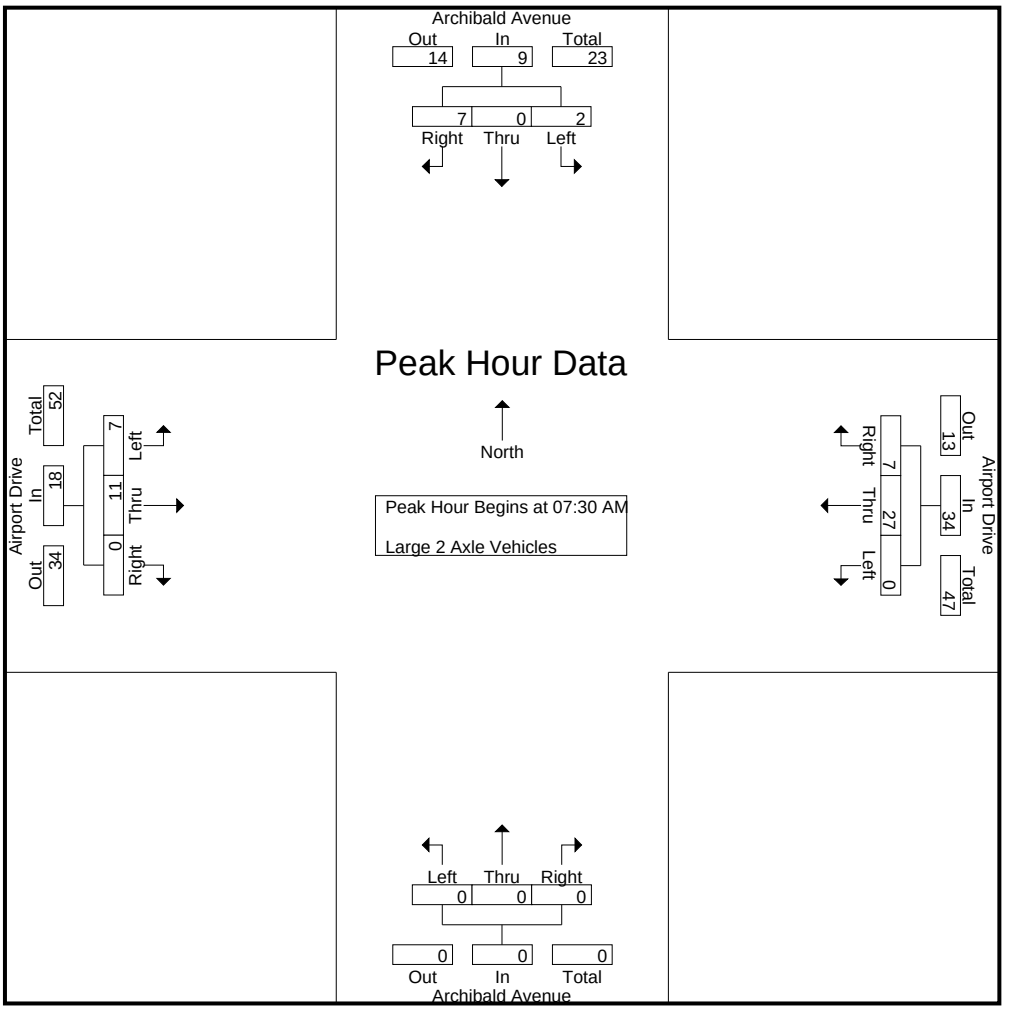

Peak Hour Analysis From 07:30 AM to 08:15 AM - Peak 1 of 1
Peak Hour for Each Approach Begins at:

	07:30 AM				07:30 AM				07:30 AM				07:30 AM			
+0 mins.	0	0	2	2	0	**8**	0	8	0	0	0	0	1	3	0	4
+15 mins.	**1**	0	1	2	0	5	2	7	0	0	0	0	2	3	0	**5**
+30 mins.	1	0	1	2	0	6	**4**	**10**	0	0	0	0	1	**4**	0	5
+45 mins.	0	0	**3**	**3**	0	8	1	9	0	0	0	0	**3**	1	0	4
Total Volume	2	0	7	9	0	27	7	34	0	0	0	0	7	11	0	18
% App. Total	22.2	0	77.8		0	79.4	20.6		0	0	0		38.9	61.1	0	
PHF	.500	.000	.583	.750	.000	.844	.438	.850	.000	.000	.000	.000	.583	.688	.000	.900

Counts Unlimited, Inc.
PO Box 1178
Corona, CA 92878
(951)268-6268

City of Ontario
N/S: Archibald Avenue
E/W: Airport Drive
Weather: Clear

File Name : 04_ONT_Arch_AP AM
Site Code : 00322818
Start Date : 9/20/2022
Page No : 1

Groups Printed- 3 Axle Vehicles

	Archibald Avenue Southbound				Airport Drive Westbound				Archibald Avenue Northbound				Airport Drive Eastbound				
Start Time	Left	Thru	Right	App. Total	Left	Thru	Right	App. Total	Left	Thru	Right	App. Total	Left	Thru	Right	App. Total	Int. Total
07:00 AM	0	0	0	0	1	1	0	2	0	0	0	0	3	1	0	4	6
07:15 AM	0	0	1	1	0	0	1	1	0	0	0	0	2	1	0	3	5
07:30 AM	0	0	0	0	0	1	0	1	0	0	0	0	0	1	0	1	2
07:45 AM	0	0	1	1	0	0	0	0	0	0	0	0	1	1	0	2	3
Total	0	0	2	2	1	2	1	4	0	0	0	0	6	4	0	10	16
08:00 AM	1	0	1	2	0	0	1	1	0	0	0	0	0	0	0	0	3
08:15 AM	0	0	0	0	0	1	0	1	0	0	0	0	0	0	0	0	1
08:30 AM	1	0	0	1	0	2	0	2	0	0	0	0	0	1	0	1	4
08:45 AM	0	0	0	0	0	3	0	3	0	0	0	0	1	2	0	3	6
Total	2	0	1	3	0	6	1	7	0	0	0	0	1	3	0	4	14
Grand Total	2	0	3	5	1	8	2	11	0	0	0	0	7	7	0	14	30
Apprch %	40	0	60		9.1	72.7	18.2		0	0	0		50	50	0		
Total %	6.7	0	10	16.7	3.3	26.7	6.7	36.7	0	0	0	0	23.3	23.3	0	46.7	

	Archibald Avenue Southbound				Airport Drive Westbound				Archibald Avenue Northbound				Airport Drive Eastbound				
Start Time	Left	Thru	Right	App. Total	Left	Thru	Right	App. Total	Left	Thru	Right	App. Total	Left	Thru	Right	App. Total	Int. Total
Peak Hour Analysis From 07:30 AM to 08:15 AM - Peak 1 of 1																	
Peak Hour for Entire Intersection Begins at 07:30 AM																	
07:30 AM	0	0	0	0	0	**1**	0	**1**	0	0	0	0	0	**1**	0	1	2
07:45 AM	0	0	**1**	1	0	0	0	0	0	0	0	0	**1**	1	0	**2**	**3**
08:00 AM	**1**	0	1	**2**	0	0	**1**	1	0	0	0	0	0	0	0	0	3
08:15 AM	0	0	0	0	0	1	0	1	0	0	0	0	0	0	0	0	1
Total Volume	1	0	2	3	0	2	1	3	0	0	0	0	1	2	0	3	9
% App. Total	33.3	0	66.7		0	66.7	33.3		0	0	0		33.3	66.7	0		
PHF	.250	.000	.500	.375	.000	.500	.250	.750	.000	.000	.000	.000	.250	.500	.000	.375	.750

Counts Unlimited, Inc.
PO Box 1178
Corona, CA 92878
(951)268-6268

City of Ontario
N/S: Archibald Avenue
E/W: Airport Drive
Weather: Clear

File Name : 04_ONT_Arch_AP AM
Site Code : 00322818
Start Date : 9/20/2022
Page No : 2

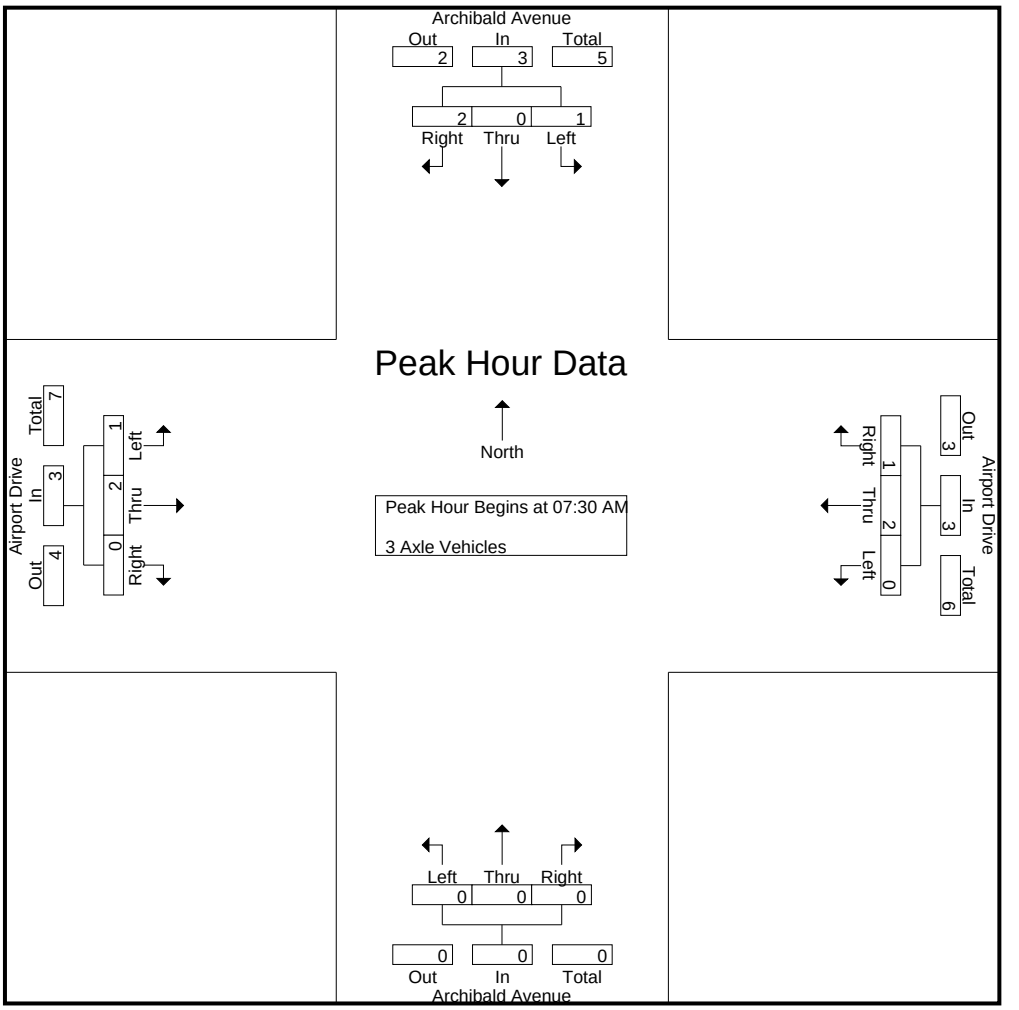

Peak Hour Analysis From 07:30 AM to 08:15 AM - Peak 1 of 1
Peak Hour for Each Approach Begins at:

	07:30 AM				07:30 AM				07:30 AM				07:30 AM			
+0 mins.	0	0	0	0	0	**1**	0	**1**	0	0	0	0	0	**1**	0	1
+15 mins.	0	0	**1**	1	0	0	0	0	0	0	0	0	**1**	1	0	**2**
+30 mins.	**1**	0	1	**2**	0	0	**1**	1	0	0	0	0	0	0	0	0
+45 mins.	0	0	0	0	0	1	0	1	0	0	0	0	0	0	0	0
Total Volume	1	0	2	3	0	2	1	3	0	0	0	0	1	2	0	3
% App. Total	33.3	0	66.7		0	66.7	33.3		0	0	0		33.3	66.7	0	
PHF	.250	.000	.500	.375	.000	.500	.250	.750	.000	.000	.000	.000	.250	.500	.000	.375

Counts Unlimited, Inc.
PO Box 1178
Corona, CA 92878
(951)268-6268

City of Ontario
N/S: Archibald Avenue
E/W: Airport Drive
Weather: Clear

File Name : 04_ONT_Arch_AP AM
Site Code : 00322818
Start Date : 9/20/2022
Page No : 1

Groups Printed- 4+ Axle Trucks

	Archibald Avenue Southbound				Airport Drive Westbound				Archibald Avenue Northbound				Airport Drive Eastbound				
Start Time	Left	Thru	Right	App. Total	Left	Thru	Right	App. Total	Left	Thru	Right	App. Total	Left	Thru	Right	App. Total	Int. Total
07:00 AM	2	0	0	2	0	1	0	1	0	0	0	0	0	0	0	0	3
07:15 AM	1	0	0	1	0	0	1	1	0	0	0	0	1	0	0	1	3
07:30 AM	0	0	0	0	0	1	1	2	0	0	0	0	0	0	0	0	2
07:45 AM	0	0	1	1	0	4	2	6	0	0	0	0	2	0	0	2	9
Total	3	0	1	4	0	6	4	10	0	0	0	0	3	0	0	3	17
08:00 AM	2	0	0	2	0	3	2	5	0	0	0	0	0	1	0	1	8
08:15 AM	0	0	1	1	0	2	2	4	0	0	0	0	1	0	0	1	6
08:30 AM	2	0	2	4	0	1	1	2	0	0	0	0	4	1	0	5	11
08:45 AM	1	0	1	2	0	2	2	4	0	0	0	0	3	2	0	5	11
Total	5	0	4	9	0	8	7	15	0	0	0	0	8	4	0	12	36
Grand Total	8	0	5	13	0	14	11	25	0	0	0	0	11	4	0	15	53
Apprch %	61.5	0	38.5		0	56	44		0	0	0		73.3	26.7	0		
Total %	15.1	0	9.4	24.5	0	26.4	20.8	47.2	0	0	0	0	20.8	7.5	0	28.3	

	Archibald Avenue Southbound				Airport Drive Westbound				Archibald Avenue Northbound				Airport Drive Eastbound				
Start Time	Left	Thru	Right	App. Total	Left	Thru	Right	App. Total	Left	Thru	Right	App. Total	Left	Thru	Right	App. Total	Int. Total
Peak Hour Analysis From 07:30 AM to 08:15 AM - Peak 1 of 1																	
Peak Hour for Entire Intersection Begins at 07:30 AM																	
07:30 AM	0	0	0	0	0	1	1	2	0	0	0	0	0	0	0	0	2
07:45 AM	0	0	**1**	1	0	**4**	**2**	**6**	0	0	0	0	**2**	0	0	**2**	**9**
08:00 AM	**2**	0	0	**2**	0	3	2	5	0	0	0	0	0	**1**	0	1	8
08:15 AM	0	0	1	1	0	2	2	4	0	0	0	0	1	0	0	1	6
Total Volume	2	0	2	4	0	10	7	17	0	0	0	0	3	1	0	4	25
% App. Total	50	0	50		0	58.8	41.2		0	0	0		75	25	0		
PHF	.250	.000	.500	.500	.000	.625	.875	.708	.000	.000	.000	.000	.375	.250	.000	.500	.694

Counts Unlimited, Inc.
PO Box 1178
Corona, CA 92878
(951)268-6268

City of Ontario
N/S: Archibald Avenue
E/W: Airport Drive
Weather: Clear

File Name : 04_ONT_Arch_AP AM
Site Code : 00322818
Start Date : 9/20/2022
Page No : 2

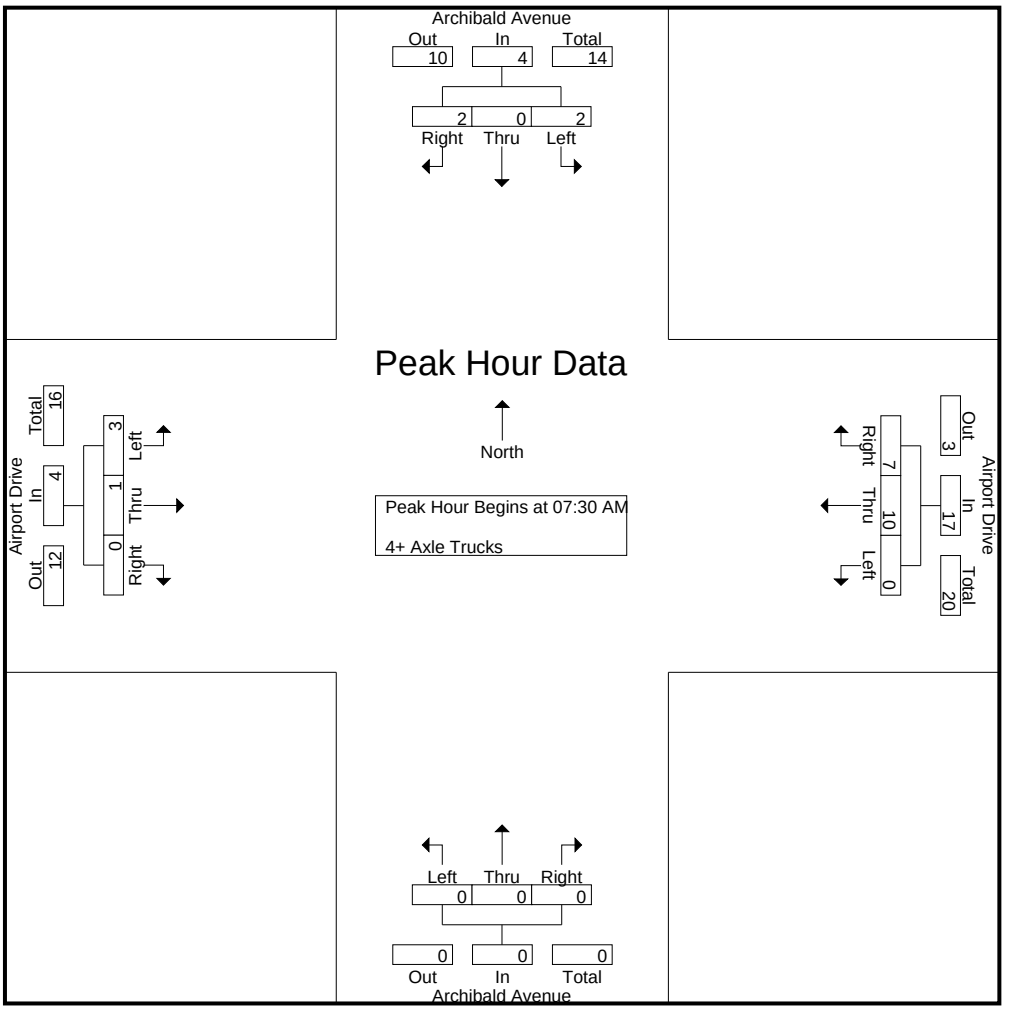

Peak Hour Analysis From 07:30 AM to 08:15 AM - Peak 1 of 1
Peak Hour for Each Approach Begins at:

	07:30 AM				07:30 AM				07:30 AM				07:30 AM			
+0 mins.	0	0	0	0	0	1	1	2	0	0	0	0	0	0	0	0
+15 mins.	0	0	**1**	1	0	**4**	**2**	**6**	0	0	0	0	**2**	0	0	**2**
+30 mins.	**2**	0	0	**2**	0	3	2	5	0	0	0	0	0	**1**	0	1
+45 mins.	0	0	1	1	0	2	2	4	0	0	0	0	1	0	0	1
Total Volume	2	0	2	4	0	10	7	17	0	0	0	0	3	1	0	4
% App. Total	50	0	50		0	58.8	41.2		0	0	0		75	25	0	
PHF	.250	.000	.500	.500	.000	.625	.875	.708	.000	.000	.000	.000	.375	.250	.000	.500

Counts Unlimited, Inc.
PO Box 1178
Corona, CA 92878
(951)268-6268

City of Ontario
N/S: Archibald Avenue
E/W: Airport Drive
Weather: Clear

File Name : 04_ONT_Arch_AP PM
Site Code : 00322818
Start Date : 9/20/2022
Page No : 1

Groups Printed- Passenger Vehicles - Large 2 Axle Vehicles - 3 Axle Vehicles - 4+ Axle Trucks

	Archibald Avenue Southbound				Airport Drive Westbound				Archibald Avenue Northbound				Airport Drive Eastbound				
Start Time	Left	Thru	Right	App. Total	Left	Thru	Right	App. Total	Left	Thru	Right	App. Total	Left	Thru	Right	App. Total	Int. Total
04:00 PM	91	20	71	182	21	102	96	219	1	15	5	21	193	158	3	354	776
04:15 PM	85	32	81	198	11	115	116	242	2	17	13	32	179	172	7	358	830
04:30 PM	94	23	87	204	15	104	136	255	0	19	17	36	194	196	1	391	886
04:45 PM	80	29	79	188	13	103	130	246	7	9	7	23	170	165	6	341	798
Total	350	104	318	772	60	424	478	962	10	60	42	112	736	691	17	1444	3290
05:00 PM	107	14	98	219	17	104	104	225	3	29	12	44	168	157	3	328	816
05:15 PM	105	26	107	238	15	90	89	194	2	11	2	15	163	144	3	310	757
05:30 PM	89	25	69	183	17	78	80	175	6	14	14	34	174	144	4	322	714
05:45 PM	88	21	64	173	5	79	49	133	3	5	4	12	160	118	5	283	601
Total	389	86	338	813	54	351	322	727	14	59	32	105	665	563	15	1243	2888
Grand Total	739	190	656	1585	114	775	800	1689	24	119	74	217	1401	1254	32	2687	6178
Apprch %	46.6	12	41.4		6.7	45.9	47.4		11.1	54.8	34.1		52.1	46.7	1.2		
Total %	12	3.1	10.6	25.7	1.8	12.5	12.9	27.3	0.4	1.9	1.2	3.5	22.7	20.3	0.5	43.5	
Passenger Vehicles	680	190	618	1488	114	707	778	1599	24	119	74	217	1357	1164	32	2553	5857
% Passenger Vehicles	92	100	94.2	93.9	100	91.2	97.2	94.7	100	100	100	100	96.9	92.8	100	95	94.8
Large 2 Axle Vehicles	27	0	21	48	0	56	11	67	0	0	0	0	20	43	0	63	178
% Large 2 Axle Vehicles	3.7	0	3.2	3	0	7.2	1.4	4	0	0	0	0	1.4	3.4	0	2.3	2.9
3 Axle Vehicles	10	0	3	13	0	7	3	10	0	0	0	0	5	17	0	22	45
% 3 Axle Vehicles	1.4	0	0.5	0.8	0	0.9	0.4	0.6	0	0	0	0	0.4	1.4	0	0.8	0.7
4+ Axle Trucks	22	0	14	36	0	5	8	13	0	0	0	0	19	30	0	49	98
% 4+ Axle Trucks	3	0	2.1	2.3	0	0.6	1	0.8	0	0	0	0	1.4	2.4	0	1.8	1.6

	Archibald Avenue Southbound				Airport Drive Westbound				Archibald Avenue Northbound				Airport Drive Eastbound				
Start Time	Left	Thru	Right	App. Total	Left	Thru	Right	App. Total	Left	Thru	Right	App. Total	Left	Thru	Right	App. Total	Int. Total
Peak Hour Analysis From 04:00 PM to 05:45 PM - Peak 1 of 1																	
Peak Hour for Entire Intersection Begins at 04:15 PM																	
04:15 PM	85	**32**	81	198	11	**115**	116	242	2	17	13	32	179	172	**7**	358	830
04:30 PM	94	23	87	204	15	104	**136**	**255**	0	19	**17**	36	**194**	**196**	1	**391**	**886**
04:45 PM	80	29	79	188	13	103	130	246	**7**	9	7	23	170	165	6	341	798
05:00 PM	**107**	14	**98**	**219**	**17**	104	104	225	3	**29**	12	**44**	168	157	3	328	816
Total Volume	366	98	345	809	56	426	486	968	12	74	49	135	711	690	17	1418	3330
% App. Total	45.2	12.1	42.6		5.8	44	50.2		8.9	54.8	36.3		50.1	48.7	1.2		
PHF	.855	.766	.880	.924	.824	.926	.893	.949	.429	.638	.721	.767	.916	.880	.607	.907	.940

Counts Unlimited, Inc.
PO Box 1178
Corona, CA 92878
(951)268-6268

City of Ontario
N/S: Archibald Avenue
E/W: Airport Drive
Weather: Clear

File Name : 04_ONT_Arch_AP PM
Site Code : 00322818
Start Date : 9/20/2022
Page No : 2

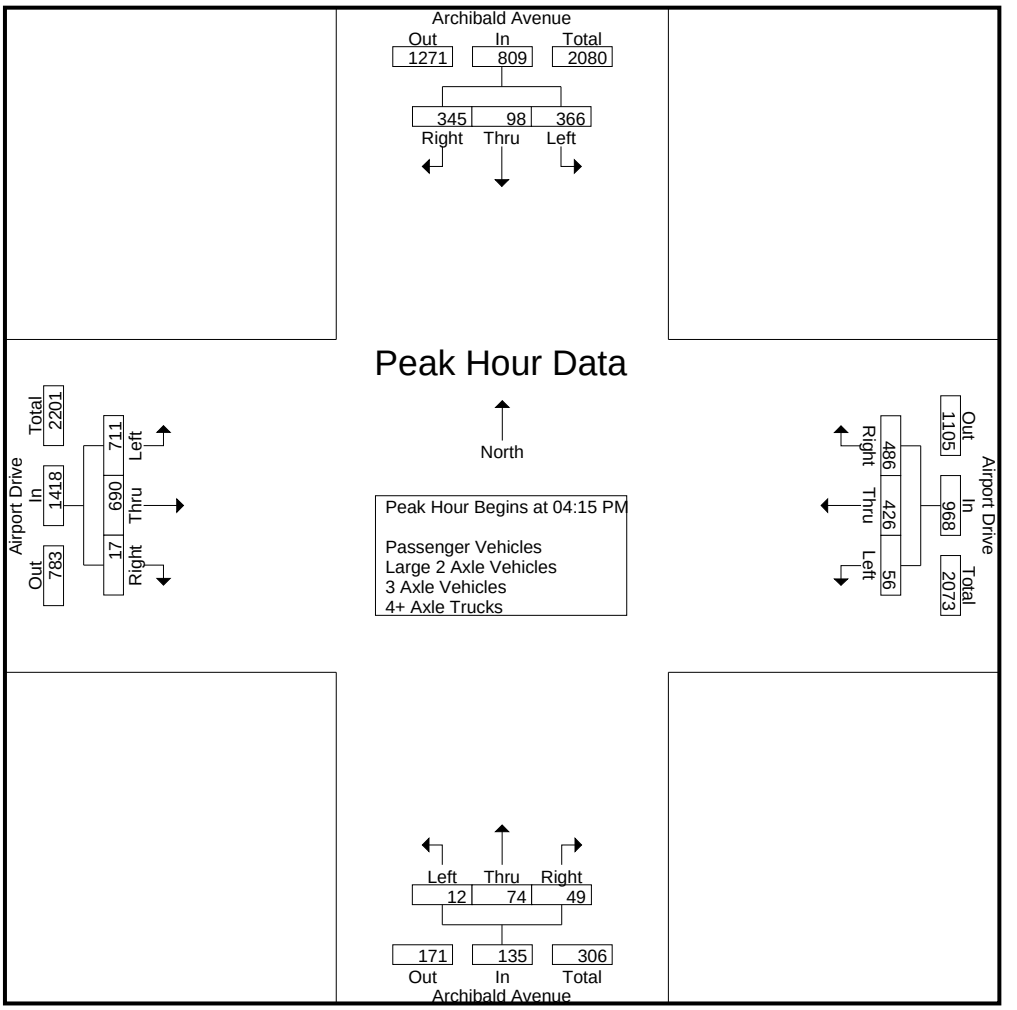

Peak Hour Analysis From 04:00 PM to 05:45 PM - Peak 1 of 1
Peak Hour for Each Approach Begins at:

	04:30 PM				04:15 PM				04:15 PM				04:00 PM			
+0 mins.	94	23	87	204	11	**115**	116	242	2	17	13	32	193	158	3	354
+15 mins.	80	**29**	79	188	15	104	**136**	**255**	0	19	**17**	36	179	172	**7**	358
+30 mins.	**107**	14	98	219	13	103	130	246	**7**	9	7	23	**194**	**196**	1	**391**
+45 mins.	105	26	**107**	**238**	**17**	104	104	225	3	**29**	12	**44**	170	165	6	341
Total Volume	386	92	371	849	56	426	486	968	12	74	49	135	736	691	17	1444
% App. Total	45.5	10.8	43.7		5.8	44	50.2		8.9	54.8	36.3		51	47.9	1.2	
PHF	.902	.793	.867	.892	.824	.926	.893	.949	.429	.638	.721	.767	.948	.881	.607	.923

Counts Unlimited, Inc.
PO Box 1178
Corona, CA 92878
(951)268-6268

City of Ontario
N/S: Archibald Avenue
E/W: Airport Drive
Weather: Clear

File Name : 04_ONT_Arch_AP PM
Site Code : 00322818
Start Date : 9/20/2022
Page No : 1

Groups Printed- Passenger Vehicles

	Archibald Avenue Southbound				Airport Drive Westbound				Archibald Avenue Northbound				Airport Drive Eastbound				
Start Time	Left	Thru	Right	App. Total	Left	Thru	Right	App. Total	Left	Thru	Right	App. Total	Left	Thru	Right	App. Total	Int. Total
04:00 PM	84	20	68	172	21	96	92	209	1	15	5	21	186	151	3	340	742
04:15 PM	78	32	76	186	11	105	114	230	2	17	13	32	177	156	7	340	788
04:30 PM	85	23	81	189	15	97	135	247	0	19	17	36	186	176	1	363	835
04:45 PM	70	29	76	175	13	91	126	230	7	9	7	23	165	151	6	322	750
Total	317	104	301	722	60	389	467	916	10	60	42	112	714	634	17	1365	3115
05:00 PM	101	14	92	207	17	94	100	211	3	29	12	44	161	147	3	311	773
05:15 PM	100	26	101	227	15	84	85	184	2	11	2	15	161	137	3	301	727
05:30 PM	83	25	65	173	17	71	77	165	6	14	14	34	170	136	4	310	682
05:45 PM	79	21	59	159	5	69	49	123	3	5	4	12	151	110	5	266	560
Total	363	86	317	766	54	318	311	683	14	59	32	105	643	530	15	1188	2742
Grand Total	680	190	618	1488	114	707	778	1599	24	119	74	217	1357	1164	32	2553	5857
Apprch %	45.7	12.8	41.5		7.1	44.2	48.7		11.1	54.8	34.1		53.2	45.6	1.3		
Total %	11.6	3.2	10.6	25.4	1.9	12.1	13.3	27.3	0.4	2	1.3	3.7	23.2	19.9	0.5	43.6	

	Archibald Avenue Southbound				Airport Drive Westbound				Archibald Avenue Northbound				Airport Drive Eastbound				
Start Time	Left	Thru	Right	App. Total	Left	Thru	Right	App. Total	Left	Thru	Right	App. Total	Left	Thru	Right	App. Total	Int. Total
Peak Hour Analysis From 04:15 PM to 05:00 PM - Peak 1 of 1																	
Peak Hour for Entire Intersection Begins at 04:15 PM																	
04:15 PM	78	**32**	76	186	11	**105**	114	230	2	17	13	32	177	156	**7**	340	788
04:30 PM	85	23	81	189	15	97	**135**	**247**	0	19	**17**	36	**186**	**176**	1	**363**	**835**
04:45 PM	70	29	76	175	13	91	126	230	**7**	9	7	23	165	151	6	322	750
05:00 PM	**101**	14	**92**	**207**	**17**	94	100	211	3	**29**	12	**44**	161	147	3	311	773
Total Volume	334	98	325	757	56	387	475	918	12	74	49	135	689	630	17	1336	3146
% App. Total	44.1	12.9	42.9		6.1	42.2	51.7		8.9	54.8	36.3		51.6	47.2	1.3		
PHF	.827	.766	.883	.914	.824	.921	.880	.929	.429	.638	.721	.767	.926	.895	.607	.920	.942

Counts Unlimited, Inc.
PO Box 1178
Corona, CA 92878
(951)268-6268

City of Ontario
N/S: Archibald Avenue
E/W: Airport Drive
Weather: Clear

File Name : 04_ONT_Arch_AP PM
Site Code : 00322818
Start Date : 9/20/2022
Page No : 2

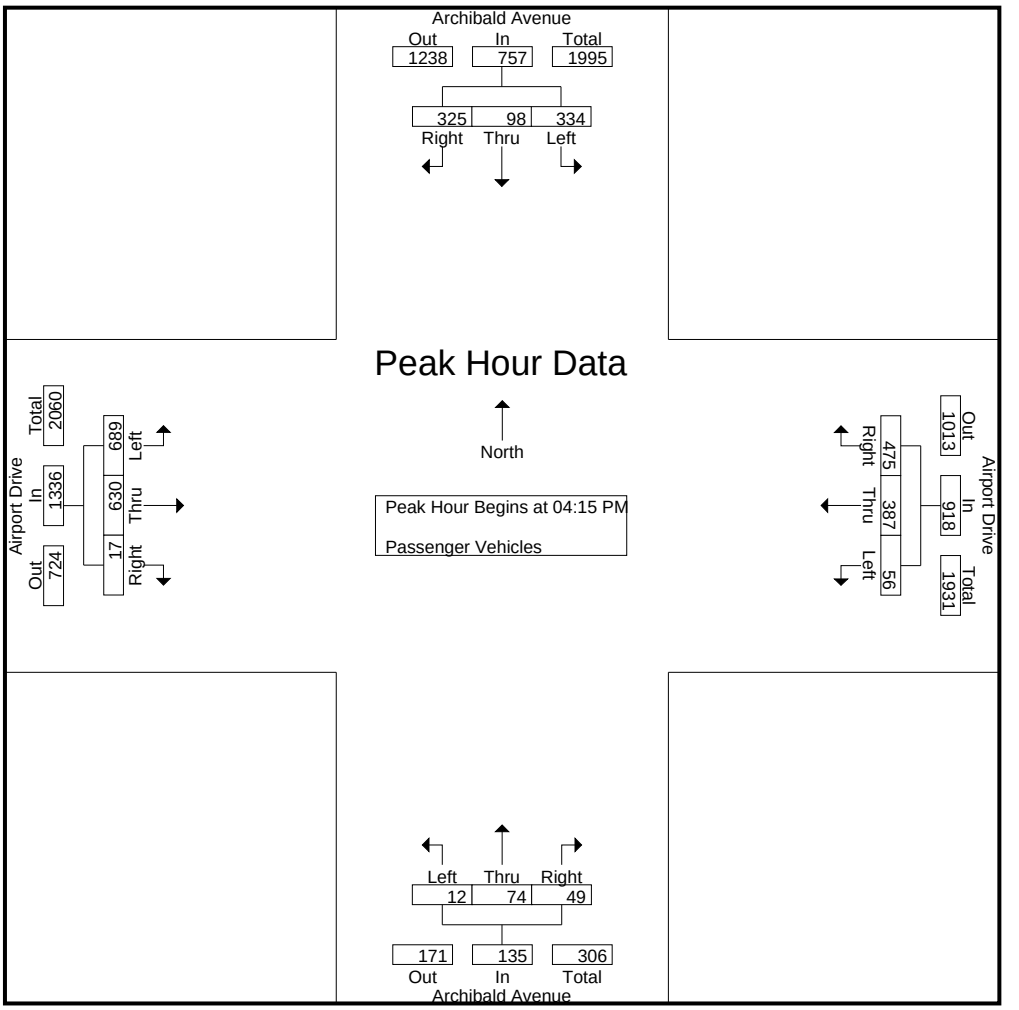

Peak Hour Analysis From 04:15 PM to 05:00 PM - Peak 1 of 1
Peak Hour for Each Approach Begins at:

	04:15 PM				04:15 PM				04:15 PM				04:15 PM			
+0 mins.	78	**32**	76	186	11	**105**	114	230	2	17	13	32	177	156	**7**	340
+15 mins.	85	23	81	189	15	97	**135**	**247**	0	19	**17**	36	**186**	**176**	1	**363**
+30 mins.	70	29	76	175	13	91	126	230	**7**	9	7	23	165	151	6	322
+45 mins.	**101**	14	**92**	**207**	**17**	94	100	211	3	**29**	12	**44**	161	147	3	311
Total Volume	334	98	325	757	56	387	475	918	12	74	49	135	689	630	17	1336
% App. Total	44.1	12.9	42.9		6.1	42.2	51.7		8.9	54.8	36.3		51.6	47.2	1.3	
PHF	.827	.766	.883	.914	.824	.921	.880	.929	.429	.638	.721	.767	.926	.895	.607	.920

Counts Unlimited, Inc.
PO Box 1178
Corona, CA 92878
(951)268-6268

City of Ontario
N/S: Archibald Avenue
E/W: Airport Drive
Weather: Clear

File Name : 04_ONT_Arch_AP PM
Site Code : 00322818
Start Date : 9/20/2022
Page No : 1

Groups Printed- Large 2 Axle Vehicles

	Archibald Avenue Southbound				Airport Drive Westbound				Archibald Avenue Northbound				Airport Drive Eastbound				
Start Time	Left	Thru	Right	App. Total	Left	Thru	Right	App. Total	Left	Thru	Right	App. Total	Left	Thru	Right	App. Total	Int. Total
04:00 PM	5	0	1	6	0	5	3	8	0	0	0	0	3	1	0	4	18
04:15 PM	2	0	2	4	0	7	1	8	0	0	0	0	1	7	0	8	20
04:30 PM	3	0	4	7	0	6	1	7	0	0	0	0	3	10	0	13	27
04:45 PM	3	0	2	5	0	8	1	9	0	0	0	0	2	7	0	9	23
Total	13	0	9	22	0	26	6	32	0	0	0	0	9	25	0	34	88
05:00 PM	4	0	4	8	0	8	2	10	0	0	0	0	4	2	0	6	24
05:15 PM	3	0	4	7	0	6	2	8	0	0	0	0	1	5	0	6	21
05:30 PM	3	0	2	5	0	7	1	8	0	0	0	0	1	5	0	6	19
05:45 PM	4	0	2	6	0	9	0	9	0	0	0	0	5	6	0	11	26
Total	14	0	12	26	0	30	5	35	0	0	0	0	11	18	0	29	90
Grand Total	27	0	21	48	0	56	11	67	0	0	0	0	20	43	0	63	178
Apprch %	56.2	0	43.8		0	83.6	16.4		0	0	0		31.7	68.3	0		
Total %	15.2	0	11.8	27	0	31.5	6.2	37.6	0	0	0	0	11.2	24.2	0	35.4	

	Archibald Avenue Southbound				Airport Drive Westbound				Archibald Avenue Northbound				Airport Drive Eastbound				
Start Time	Left	Thru	Right	App. Total	Left	Thru	Right	App. Total	Left	Thru	Right	App. Total	Left	Thru	Right	App. Total	Int. Total
Peak Hour Analysis From 04:15 PM to 05:00 PM - Peak 1 of 1																	
Peak Hour for Entire Intersection Begins at 04:15 PM																	
04:15 PM	2	0	2	4	0	7	1	8	0	0	0	0	1	7	0	8	20
04:30 PM	3	0	**4**	7	0	6	1	7	0	0	0	0	3	**10**	0	**13**	**27**
04:45 PM	3	0	2	5	0	**8**	1	9	0	0	0	0	2	7	0	9	23
05:00 PM	**4**	0	4	**8**	0	8	**2**	**10**	0	0	0	0	**4**	2	0	6	24
Total Volume	12	0	12	24	0	29	5	34	0	0	0	0	10	26	0	36	94
% App. Total	50	0	50		0	85.3	14.7		0	0	0		27.8	72.2	0		
PHF	.750	.000	.750	.750	.000	.906	.625	.850	.000	.000	.000	.000	.625	.650	.000	.692	.870

Counts Unlimited, Inc.
PO Box 1178
Corona, CA 92878
(951)268-6268

City of Ontario
N/S: Archibald Avenue
E/W: Airport Drive
Weather: Clear

File Name : 04_ONT_Arch_AP PM
Site Code : 00322818
Start Date : 9/20/2022
Page No : 2

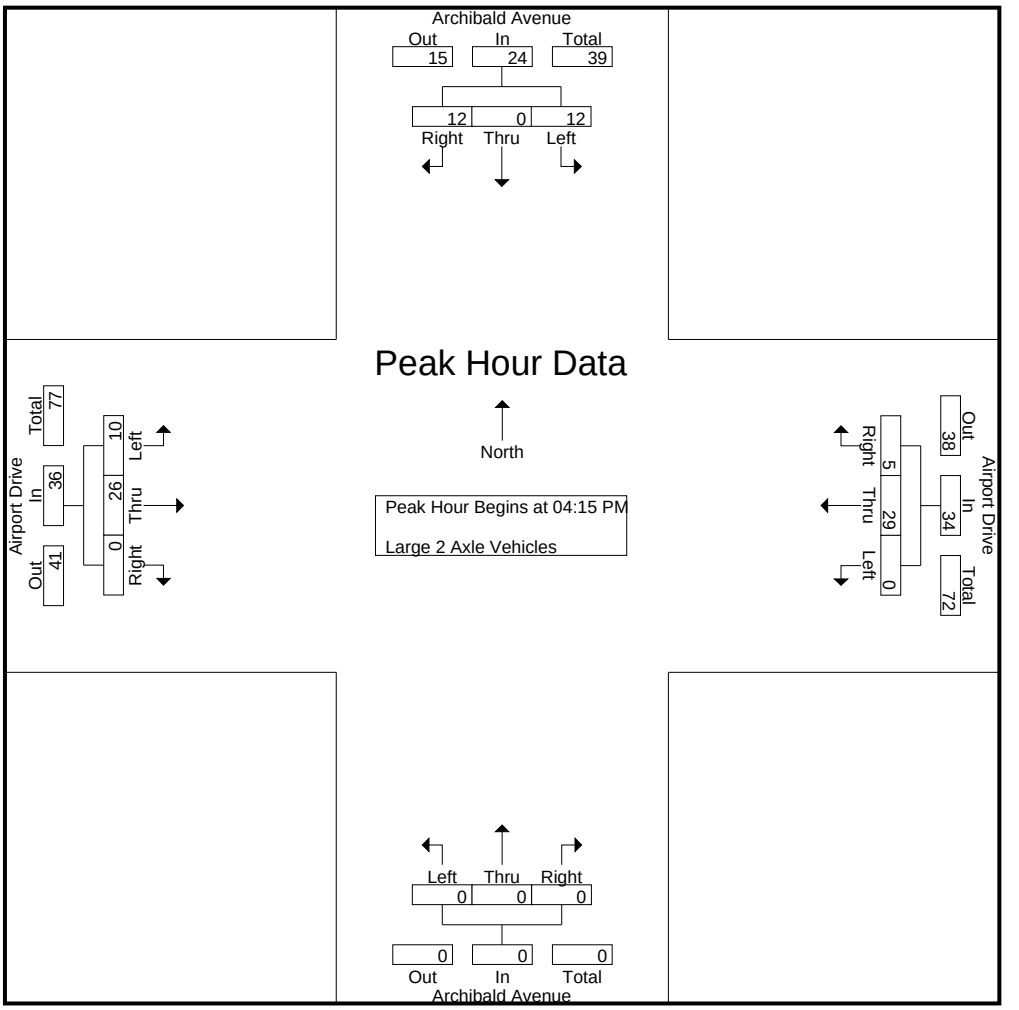

Peak Hour Analysis From 04:15 PM to 05:00 PM - Peak 1 of 1
Peak Hour for Each Approach Begins at:

	04:15 PM				04:15 PM				04:15 PM				04:15 PM			
+0 mins.	2	0	2	4	0	7	1	8	0	0	0	0	1	7	0	8
+15 mins.	3	0	**4**	7	0	6	1	7	0	0	0	0	3	**10**	0	**13**
+30 mins.	3	0	2	5	0	**8**	1	9	0	0	0	0	2	7	0	9
+45 mins.	**4**	0	4	**8**	0	8	**2**	**10**	0	0	0	0	**4**	2	0	6
Total Volume	12	0	12	24	0	29	5	34	0	0	0	0	10	26	0	36
% App. Total	50	0	50		0	85.3	14.7		0	0	0		27.8	72.2	0	
PHF	.750	.000	.750	.750	.000	.906	.625	.850	.000	.000	.000	.000	.625	.650	.000	.692

Counts Unlimited, Inc.
PO Box 1178
Corona, CA 92878
(951)268-6268

City of Ontario
N/S: Archibald Avenue
E/W: Airport Drive
Weather: Clear

File Name : 04_ONT_Arch_AP PM
Site Code : 00322818
Start Date : 9/20/2022
Page No : 1

Groups Printed- 3 Axle Vehicles

	Archibald Avenue Southbound				Airport Drive Westbound				Archibald Avenue Northbound				Airport Drive Eastbound				
Start Time	Left	Thru	Right	App. Total	Left	Thru	Right	App. Total	Left	Thru	Right	App. Total	Left	Thru	Right	App. Total	Int. Total
04:00 PM	0	0	2	2	0	0	0	0	0	0	0	0	2	2	0	4	6
04:15 PM	1	0	1	2	0	3	0	3	0	0	0	0	0	2	0	2	7
04:30 PM	3	0	0	3	0	0	0	0	0	0	0	0	0	3	0	3	6
04:45 PM	2	0	0	2	0	1	1	2	0	0	0	0	1	2	0	3	7
Total	6	0	3	9	0	4	1	5	0	0	0	0	3	9	0	12	26
05:00 PM	1	0	0	1	0	2	0	2	0	0	0	0	0	5	0	5	8
05:15 PM	1	0	0	1	0	0	1	1	0	0	0	0	0	2	0	2	4
05:30 PM	1	0	0	1	0	0	1	1	0	0	0	0	2	0	0	2	4
05:45 PM	1	0	0	1	0	1	0	1	0	0	0	0	0	1	0	1	3
Total	4	0	0	4	0	3	2	5	0	0	0	0	2	8	0	10	19
Grand Total	10	0	3	13	0	7	3	10	0	0	0	0	5	17	0	22	45
Apprch %	76.9	0	23.1		0	70	30		0	0	0		22.7	77.3	0		
Total %	22.2	0	6.7	28.9	0	15.6	6.7	22.2	0	0	0	0	11.1	37.8	0	48.9	

	Archibald Avenue Southbound				Airport Drive Westbound				Archibald Avenue Northbound				Airport Drive Eastbound				
Start Time	Left	Thru	Right	App. Total	Left	Thru	Right	App. Total	Left	Thru	Right	App. Total	Left	Thru	Right	App. Total	Int. Total
Peak Hour Analysis From 04:15 PM to 05:00 PM - Peak 1 of 1																	
Peak Hour for Entire Intersection Begins at 04:15 PM																	
04:15 PM	1	0	**1**	2	0	**3**	0	**3**	0	0	0	0	0	2	0	2	7
04:30 PM	**3**	0	0	**3**	0	0	0	0	0	0	0	0	0	3	0	3	6
04:45 PM	2	0	0	2	0	1	**1**	2	0	0	0	0	**1**	2	0	3	7
05:00 PM	1	0	0	1	0	2	0	2	0	0	0	0	0	**5**	0	**5**	**8**
Total Volume	7	0	1	8	0	6	1	7	0	0	0	0	1	12	0	13	28
% App. Total	87.5	0	12.5		0	85.7	14.3		0	0	0		7.7	92.3	0		
PHF	.583	.000	.250	.667	.000	.500	.250	.583	.000	.000	.000	.000	.250	.600	.000	.650	.875

Counts Unlimited, Inc.
PO Box 1178
Corona, CA 92878
(951)268-6268

City of Ontario
N/S: Archibald Avenue
E/W: Airport Drive
Weather: Clear

File Name : 04_ONT_Arch_AP PM
Site Code : 00322818
Start Date : 9/20/2022
Page No : 2

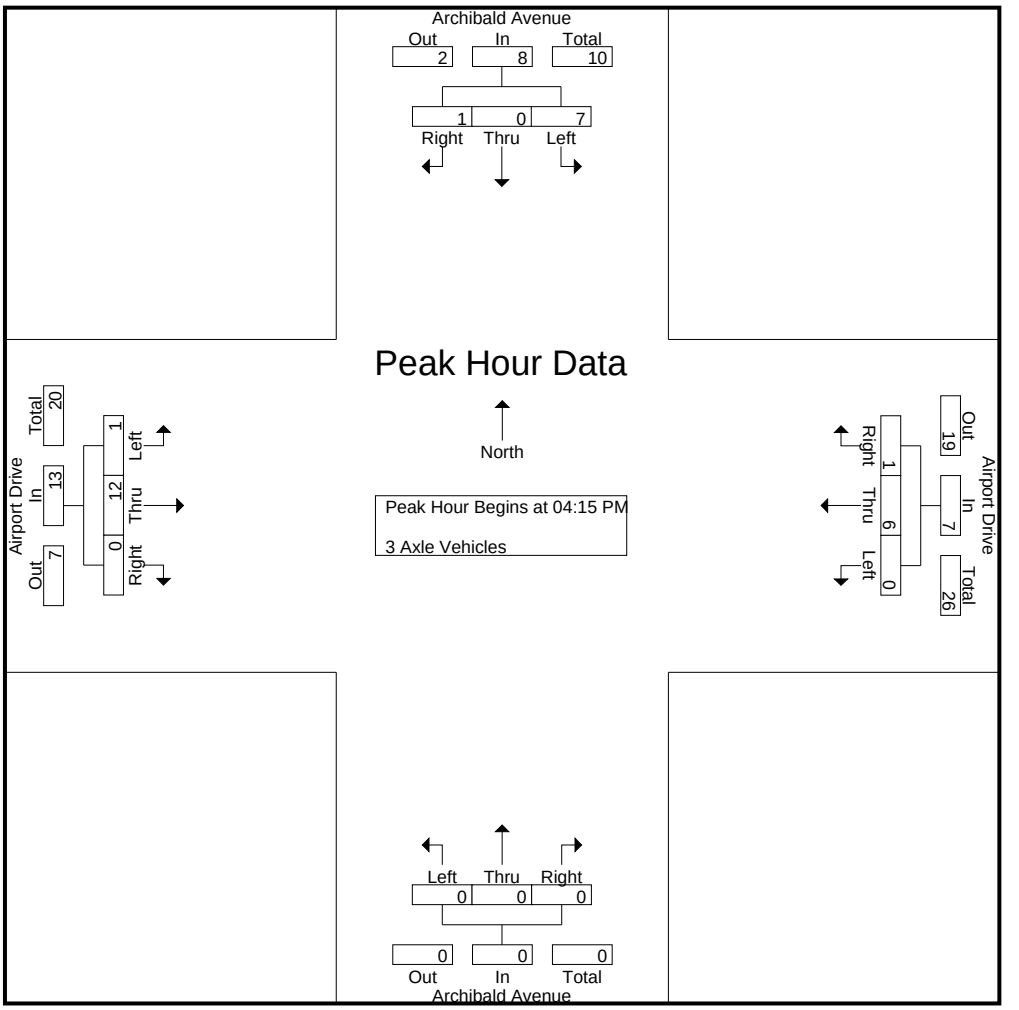

Peak Hour Analysis From 04:15 PM to 05:00 PM - Peak 1 of 1
Peak Hour for Each Approach Begins at:

	04:15 PM				04:15 PM				04:15 PM				04:15 PM			
+0 mins.	1	0	**1**	2	0	**3**	0	**3**	0	0	0	0	0	2	0	2
+15 mins.	**3**	0	0	**3**	0	0	0	0	0	0	0	0	0	3	0	3
+30 mins.	2	0	0	2	0	1	**1**	2	0	0	0	0	**1**	2	0	3
+45 mins.	1	0	0	1	0	2	0	2	0	0	0	0	0	**5**	0	**5**
Total Volume	7	0	1	8	0	6	1	7	0	0	0	0	1	12	0	13
% App. Total	87.5	0	12.5		0	85.7	14.3		0	0	0		7.7	92.3	0	
PHF	.583	.000	.250	.667	.000	.500	.250	.583	.000	.000	.000	.000	.250	.600	.000	.650

Counts Unlimited, Inc.
PO Box 1178
Corona, CA 92878
(951)268-6268

City of Ontario
N/S: Archibald Avenue
E/W: Airport Drive
Weather: Clear

File Name : 04_ONT_Arch_AP PM
Site Code : 00322818
Start Date : 9/20/2022
Page No : 1

Groups Printed- 4+ Axle Trucks

	Archibald Avenue Southbound				Airport Drive Westbound				Archibald Avenue Northbound				Airport Drive Eastbound				
Start Time	Left	Thru	Right	App. Total	Left	Thru	Right	App. Total	Left	Thru	Right	App. Total	Left	Thru	Right	App. Total	Int. Total
04:00 PM	2	0	0	2	0	1	1	2	0	0	0	0	2	4	0	6	10
04:15 PM	4	0	2	6	0	0	1	1	0	0	0	0	1	7	0	8	15
04:30 PM	3	0	2	5	0	1	0	1	0	0	0	0	5	7	0	12	18
04:45 PM	5	0	1	6	0	3	2	5	0	0	0	0	2	5	0	7	18
Total	14	0	5	19	0	5	4	9	0	0	0	0	10	23	0	33	61
05:00 PM	1	0	2	3	0	0	2	2	0	0	0	0	3	3	0	6	11
05:15 PM	1	0	2	3	0	0	1	1	0	0	0	0	1	0	0	1	5
05:30 PM	2	0	2	4	0	0	1	1	0	0	0	0	1	3	0	4	9
05:45 PM	4	0	3	7	0	0	0	0	0	0	0	0	4	1	0	5	12
Total	8	0	9	17	0	0	4	4	0	0	0	0	9	7	0	16	37
Grand Total	22	0	14	36	0	5	8	13	0	0	0	0	19	30	0	49	98
Apprch %	61.1	0	38.9		0	38.5	61.5		0	0	0		38.8	61.2	0		
Total %	22.4	0	14.3	36.7	0	5.1	8.2	13.3	0	0	0	0	19.4	30.6	0	50	

	Archibald Avenue Southbound				Airport Drive Westbound				Archibald Avenue Northbound				Airport Drive Eastbound				
Start Time	Left	Thru	Right	App. Total	Left	Thru	Right	App. Total	Left	Thru	Right	App. Total	Left	Thru	Right	App. Total	Int. Total
Peak Hour Analysis From 04:15 PM to 05:00 PM - Peak 1 of 1																	
Peak Hour for Entire Intersection Begins at 04:15 PM																	
04:15 PM	4	0	**2**	**6**	0	0	1	1	0	0	0	0	1	**7**	0	8	15
04:30 PM	3	0	2	5	0	1	0	1	0	0	0	0	**5**	7	0	**12**	**18**
04:45 PM	**5**	0	1	6	0	**3**	**2**	**5**	0	0	0	0	2	5	0	7	18
05:00 PM	1	0	2	3	0	0	2	2	0	0	0	0	3	3	0	6	11
Total Volume	13	0	7	20	0	4	5	9	0	0	0	0	11	22	0	33	62
% App. Total	65	0	35		0	44.4	55.6		0	0	0		33.3	66.7	0		
PHF	.650	.000	.875	.833	.000	.333	.625	.450	.000	.000	.000	.000	.550	.786	.000	.688	.861

Counts Unlimited, Inc.
PO Box 1178
Corona, CA 92878
(951)268-6268

City of Ontario
N/S: Archibald Avenue
E/W: Airport Drive
Weather: Clear

File Name : 04_ONT_Arch_AP PM
Site Code : 00322818
Start Date : 9/20/2022
Page No : 2

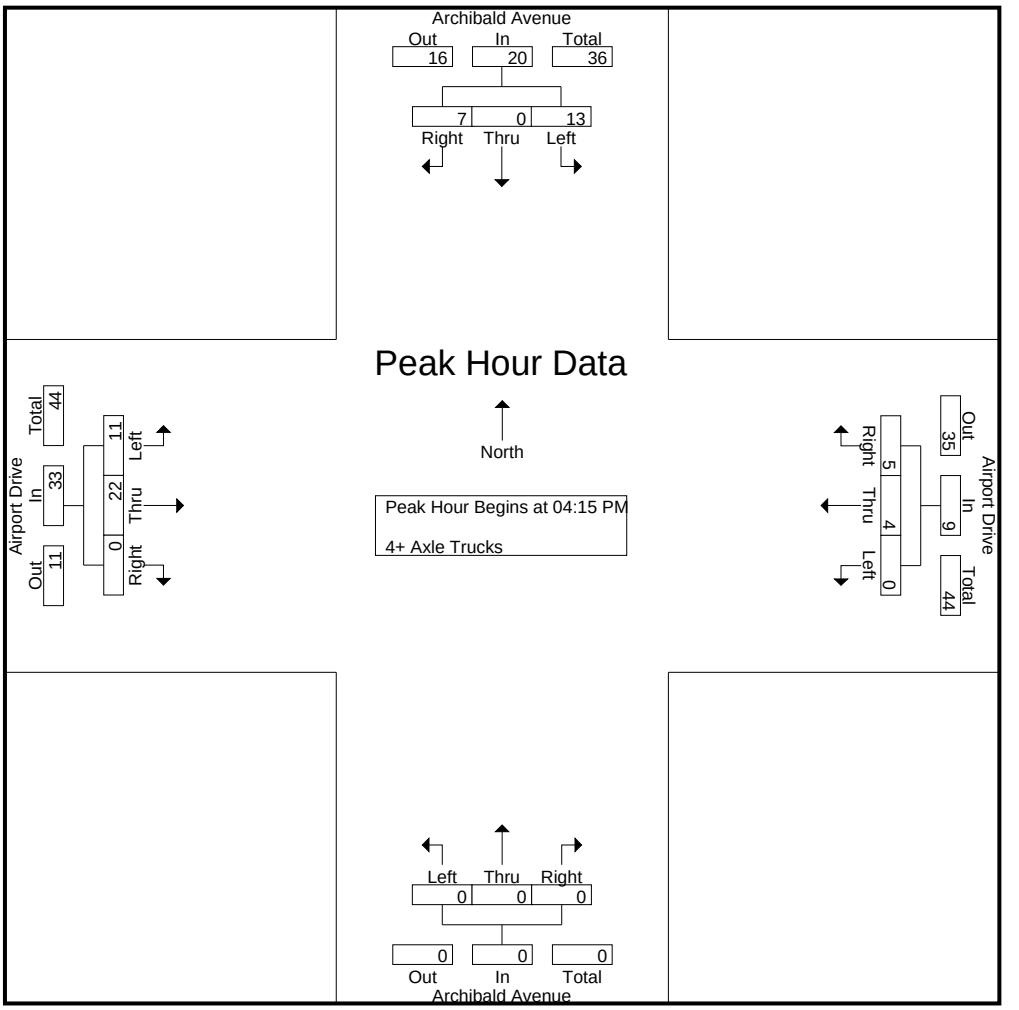

Peak Hour Analysis From 04:15 PM to 05:00 PM - Peak 1 of 1
Peak Hour for Each Approach Begins at:

	04:15 PM				04:15 PM				04:15 PM				04:15 PM			
+0 mins.	4	0	**2**	**6**	0	0	1	1	0	0	0	0	1	**7**	0	8
+15 mins.	3	0	2	5	0	1	0	1	0	0	0	0	**5**	7	0	**12**
+30 mins.	**5**	0	1	6	0	**3**	**2**	**5**	0	0	0	0	2	5	0	7
+45 mins.	1	0	2	3	0	0	2	2	0	0	0	0	3	3	0	6
Total Volume	13	0	7	20	0	4	5	9	0	0	0	0	11	22	0	33
% App. Total	65	0	35		0	44.4	55.6		0	0	0		33.3	66.7	0	
PHF	.650	.000	.875	.833	.000	.333	.625	.450	.000	.000	.000	.000	.550	.786	.000	.688

Location: Ontario
N/S: Archibald Avenue
E/W: Airport Drive

Date: 9/20/2022
Day: Tuesday

PEDESTRIANS

	North Leg Archibald Avenue	East Leg Airport Drive	South Leg Archibald Avenue	West Leg Airport Drive	
	Pedestrians	Pedestrians	Pedestrians	Pedestrians	
7:00 AM	0	0	0	0	0
7:15 AM	0	0	0	0	0
7:30 AM	0	0	0	0	0
7:45 AM	0	0	0	0	0
8:00 AM	0	0	0	0	0
8:15 AM	0	0	0	1	1
8:30 AM	0	0	0	0	0
8:45 AM	0	0	0	0	0
TOTAL VOLUMES:	0	0	0	1	1

	North Leg Archibald Avenue	East Leg Airport Drive	South Leg Archibald Avenue	West Leg Airport Drive	
	Pedestrians	Pedestrians	Pedestrians	Pedestrians	
4:00 PM	0	0	0	0	0
4:15 PM	0	0	0	0	0
4:30 PM	0	0	0	0	0
4:45 PM	0	0	0	0	0
5:00 PM	0	0	0	0	0
5:15 PM	0	0	0	0	0
5:30 PM	0	0	0	0	0
5:45 PM	0	0	0	0	0
TOTAL VOLUMES:	0	0	0	0	0

Counts Unlimited, Inc.
PO Box 1178
Corona, CA 92878
951-268-6268

Location: Ontario
N/S: Archibald Avenue
E/W: Airport Drive

Date: 9/20/2022
Day: Tuesday

BICYCLES

	Southbound Archibald Avenue			Westbound Airport Drive			Northbound Archibald Avenue			Eastbound Airport Drive			
	Left	Thru	Right	Left	Thru	Right	Left	Thru	Right	Left	Thru	Right	
7:00 AM	0	0	0	0	0	0	0	0	0	0	0	0	0
7:15 AM	0	0	0	0	0	0	0	0	0	0	0	0	0
7:30 AM	0	0	0	0	0	0	0	0	0	0	0	0	0
7:45 AM	0	0	0	0	0	0	0	0	0	0	0	0	0
8:00 AM	0	0	0	0	0	0	0	0	0	0	0	0	0
8:15 AM	0	0	0	0	0	0	0	0	0	0	0	0	0
8:30 AM	0	0	0	0	0	0	0	0	0	0	0	0	0
8:45 AM	0	0	0	0	0	0	0	0	0	0	0	0	0
TOTAL VOLUMES:	0	0	0	0	0	0	0	0	0	0	0	0	0

	Southbound Archibald Avenue			Westbound Airport Drive			Northbound Archibald Avenue			Eastbound Airport Drive			
	Left	Thru	Right	Left	Thru	Right	Left	Thru	Right	Left	Thru	Right	
4:00 PM	0	0	0	0	0	0	0	0	0	0	0	0	0
4:15 PM	0	0	0	0	0	0	0	0	0	0	0	0	0
4:30 PM	0	0	0	0	0	0	0	0	0	0	0	0	0
4:45 PM	0	0	0	0	0	0	0	0	0	0	0	0	0
5:00 PM	0	0	0	0	0	0	0	0	0	0	0	0	0
5:15 PM	0	0	0	0	0	0	0	0	0	0	0	0	0
5:30 PM	0	0	0	0	0	0	0	0	0	0	0	0	0
5:45 PM	0	0	0	0	0	0	0	0	0	0	0	0	0
TOTAL VOLUMES:	0	0	0	0	0	0	0	0	0	0	0	0	0

Counts Unlimited, Inc.
PO Box 1178
Corona, CA 92878
951-268-6268

Counts Unlimited, Inc.
PO Box 1178
Corona, CA 92878
(951)268-6268

City of Ontario
N/S: Terminal Way East
E/W: Airport Drive
Weather: Clear

File Name : 05_ONT_Term E_AP AM
Site Code : 00322818
Start Date : 9/20/2022
Page No : 1

Groups Printed- Passenger Vehicles - Large 2 Axle Vehicles - 3 Axle Vehicles - 4+ Axle Trucks

	Airport Drive Westbound			Terminal Way East Northbound			Airport Drive Eastbound			
Start Time	Left	Thru	App. Total	Left	Right	App. Total	Thru	Right	App. Total	Int. Total
07:00 AM	24	103	127	21	31	52	122	1	123	302
07:15 AM	16	117	133	19	30	49	110	2	112	294
07:30 AM	23	130	153	18	19	37	140	3	143	333
07:45 AM	11	176	187	13	25	38	177	0	177	402
Total	74	526	600	71	105	176	549	6	555	1331
08:00 AM	17	156	173	20	23	43	135	2	137	353
08:15 AM	22	167	189	20	27	47	120	4	124	360
08:30 AM	19	137	156	22	36	58	92	1	93	307
08:45 AM	26	130	156	21	43	64	88	3	91	311
Total	84	590	674	83	129	212	435	10	445	1331
Grand Total	158	1116	1274	154	234	388	984	16	1000	2662
Apprch %	12.4	87.6		39.7	60.3		98.4	1.6		
Total %	5.9	41.9	47.9	5.8	8.8	14.6	37	0.6	37.6	
Passenger Vehicles	157	1032	1189	139	228	367	934	16	950	2506
% Passenger Vehicles	99.4	92.5	93.3	90.3	97.4	94.6	94.9	100	95	94.1
Large 2 Axle Vehicles	0	49	49	13	5	18	31	0	31	98
% Large 2 Axle Vehicles	0	4.4	3.8	8.4	2.1	4.6	3.2	0	3.1	3.7
3 Axle Vehicles	0	9	9	2	0	2	7	0	7	18
% 3 Axle Vehicles	0	0.8	0.7	1.3	0	0.5	0.7	0	0.7	0.7
4+ Axle Trucks	1	26	27	0	1	1	12	0	12	40
% 4+ Axle Trucks	0.6	2.3	2.1	0	0.4	0.3	1.2	0	1.2	1.5

	Airport Drive Westbound			Terminal Way East Northbound			Airport Drive Eastbound			
Start Time	Left	Thru	App. Total	Left	Right	App. Total	Thru	Right	App. Total	Int. Total
Peak Hour Analysis From 07:00 AM to 08:45 AM - Peak 1 of 1										
Peak Hour for Entire Intersection Begins at 07:30 AM										
07:30 AM	**23**	130	153	18	19	37	140	3	143	333
07:45 AM	11	**176**	187	13	25	38	**177**	0	**177**	**402**
08:00 AM	17	156	173	**20**	23	43	135	2	137	353
08:15 AM	22	167	**189**	20	**27**	**47**	120	**4**	124	360
Total Volume	73	629	702	71	94	165	572	9	581	1448
% App. Total	10.4	89.6		43	57		98.5	1.5		
PHF	.793	.893	.929	.888	.870	.878	.808	.563	.821	.900

Counts Unlimited, Inc.
PO Box 1178
Corona, CA 92878
(951)268-6268

City of Ontario
N/S: Terminal Way East
E/W: Airport Drive
Weather: Clear

File Name : 05_ONT_Term E_AP AM
Site Code : 00322818
Start Date : 9/20/2022
Page No : 2

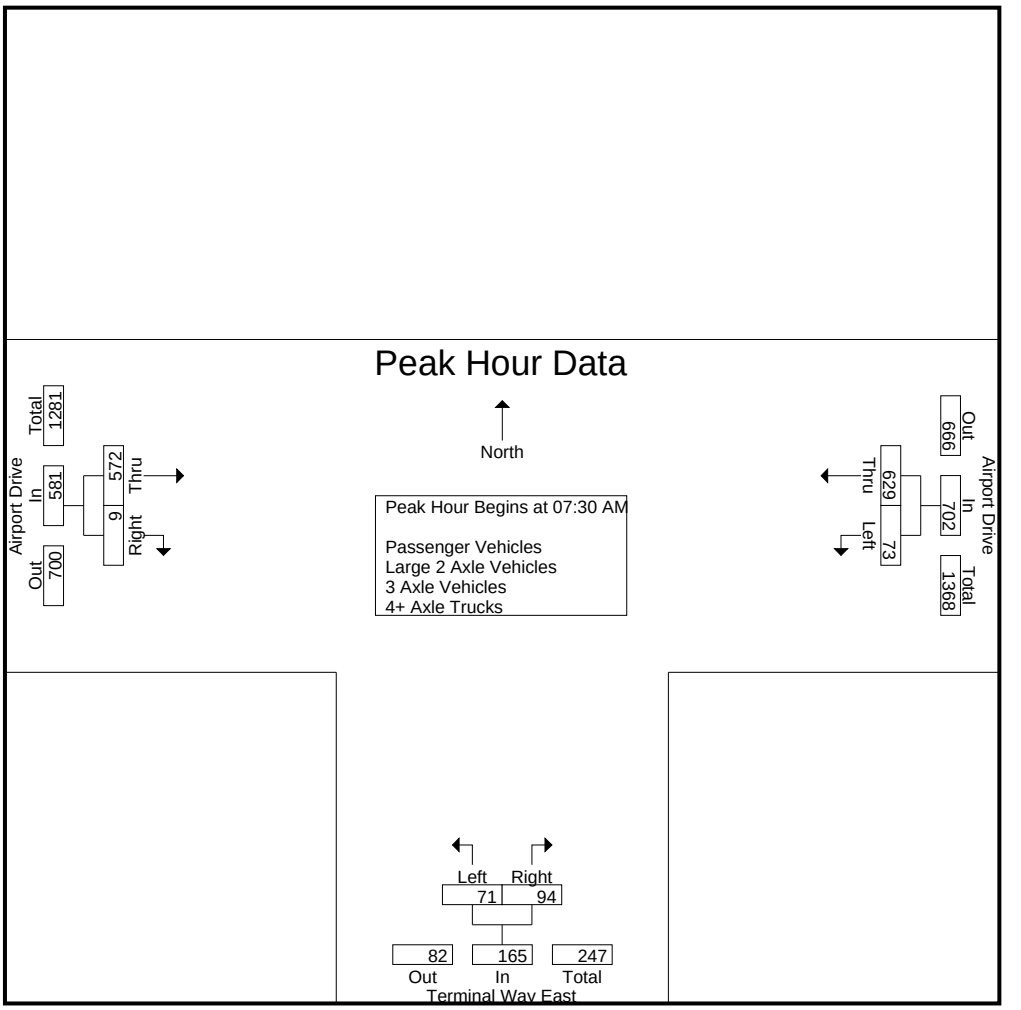

Peak Hour Analysis From 07:00 AM to 08:45 AM - Peak 1 of 1
Peak Hour for Each Approach Begins at:

	07:45 AM			08:00 AM			07:30 AM		
+0 mins.	11	**176**	187	20	23	43	140	3	143
+15 mins.	17	156	173	20	27	47	**177**	0	**177**
+30 mins.	**22**	167	**189**	**22**	36	58	135	2	137
+45 mins.	19	137	156	21	**43**	**64**	120	**4**	124
Total Volume	69	636	705	83	129	212	572	9	581
% App. Total	9.8	90.2		39.2	60.8		98.5	1.5	
PHF	.784	.903	.933	.943	.750	.828	.808	.563	.821

Counts Unlimited, Inc.
PO Box 1178
Corona, CA 92878
(951)268-6268

City of Ontario
N/S: Terminal Way East
E/W: Airport Drive
Weather: Clear

File Name : 05_ONT_Term E_AP AM
Site Code : 00322818
Start Date : 9/20/2022
Page No : 1

Groups Printed- Passenger Vehicles

	Airport Drive Westbound			Terminal Way East Northbound			Airport Drive Eastbound			
Start Time	Left	Thru	App. Total	Left	Right	App. Total	Thru	Right	App. Total	Int. Total
07:00 AM	23	98	121	18	31	49	111	1	112	282
07:15 AM	16	108	124	17	28	45	105	2	107	276
07:30 AM	23	119	142	17	19	36	136	3	139	317
07:45 AM	11	164	175	12	24	36	172	0	172	383
Total	73	489	562	64	102	166	524	6	530	1258
08:00 AM	17	143	160	17	21	38	125	2	127	325
08:15 AM	22	153	175	19	27	46	117	4	121	342
08:30 AM	19	129	148	21	35	56	86	1	87	291
08:45 AM	26	118	144	18	43	61	82	3	85	290
Total	84	543	627	75	126	201	410	10	420	1248
Grand Total	157	1032	1189	139	228	367	934	16	950	2506
Apprch %	13.2	86.8		37.9	62.1		98.3	1.7		
Total %	6.3	41.2	47.4	5.5	9.1	14.6	37.3	0.6	37.9	

	Airport Drive Westbound			Terminal Way East Northbound			Airport Drive Eastbound			
Start Time	Left	Thru	App. Total	Left	Right	App. Total	Thru	Right	App. Total	Int. Total
Peak Hour Analysis From 07:30 AM to 08:15 AM - Peak 1 of 1										
Peak Hour for Entire Intersection Begins at 07:30 AM										
07:30 AM	**23**	119	142	17	19	36	136	3	139	317
07:45 AM	11	**164**	**175**	12	24	36	**172**	0	**172**	**383**
08:00 AM	17	143	160	17	21	38	125	2	127	325
08:15 AM	22	153	175	**19**	**27**	**46**	117	**4**	121	342
Total Volume	73	579	652	65	91	156	550	9	559	1367
% App. Total	11.2	88.8		41.7	58.3		98.4	1.6		
PHF	.793	.883	.931	.855	.843	.848	.799	.563	.813	.892

Counts Unlimited, Inc.
PO Box 1178
Corona, CA 92878
(951)268-6268

City of Ontario
N/S: Terminal Way East
E/W: Airport Drive
Weather: Clear

File Name : 05_ONT_Term E_AP AM
Site Code : 00322818
Start Date : 9/20/2022
Page No : 2

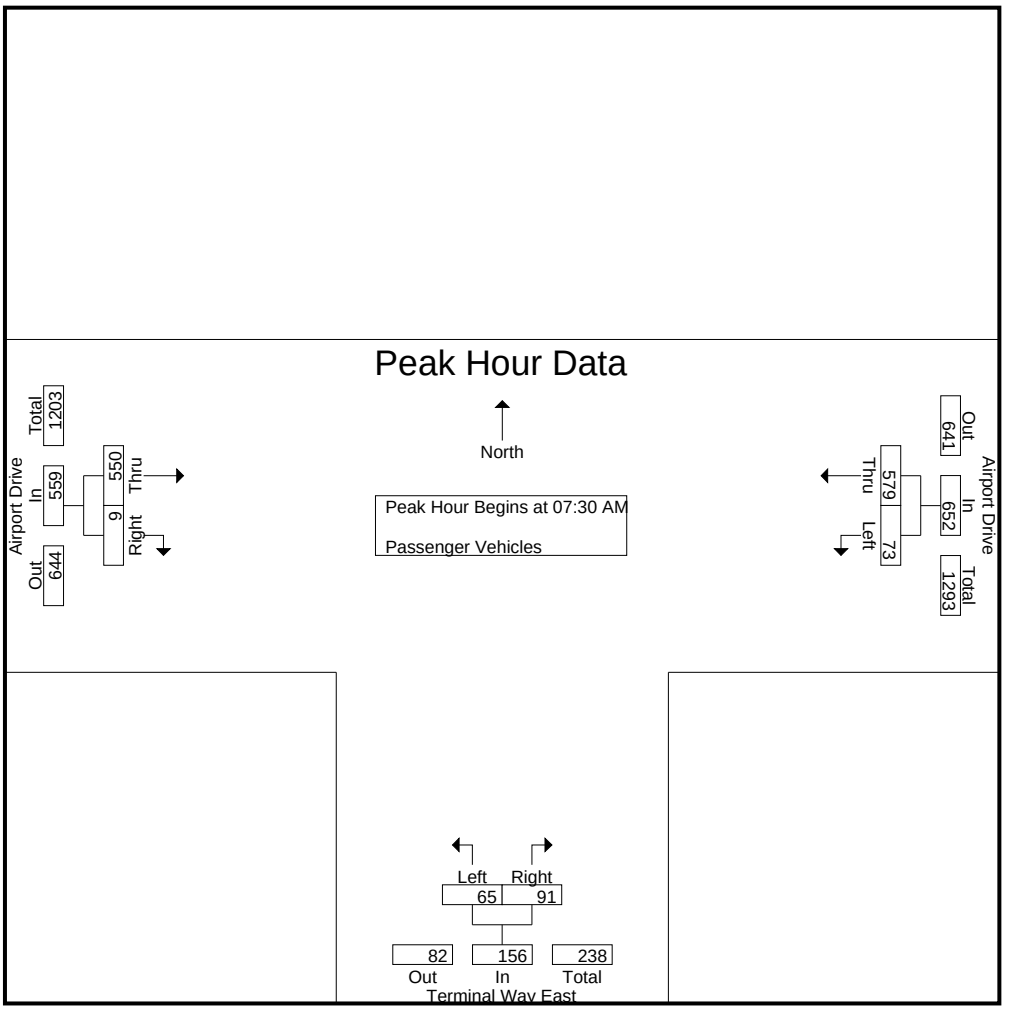

Peak Hour Analysis From 07:30 AM to 08:15 AM - Peak 1 of 1
Peak Hour for Each Approach Begins at:

	07:30 AM			07:30 AM			07:30 AM		
+0 mins.	**23**	119	142	17	19	36	136	3	139
+15 mins.	11	**164**	**175**	12	24	36	**172**	0	**172**
+30 mins.	17	143	160	17	21	38	125	2	127
+45 mins.	22	153	175	**19**	**27**	**46**	117	**4**	121
Total Volume	73	579	652	65	91	156	550	9	559
% App. Total	11.2	88.8		41.7	58.3		98.4	1.6	
PHF	.793	.883	.931	.855	.843	.848	.799	.563	.813

Counts Unlimited, Inc.
PO Box 1178
Corona, CA 92878
(951)268-6268

City of Ontario
N/S: Terminal Way East
E/W: Airport Drive
Weather: Clear

File Name : 05_ONT_Term E_AP AM
Site Code : 00322818
Start Date : 9/20/2022
Page No : 1

Groups Printed- Large 2 Axle Vehicles

	Airport Drive Westbound			Terminal Way East Northbound			Airport Drive Eastbound			
Start Time	Left	Thru	App. Total	Left	Right	App. Total	Thru	Right	App. Total	Int. Total
07:00 AM	0	3	3	2	0	2	9	0	9	14
07:15 AM	0	7	7	2	2	4	3	0	3	14
07:30 AM	0	8	8	1	0	1	3	0	3	12
07:45 AM	0	6	6	1	0	1	4	0	4	11
Total	0	24	24	6	2	8	19	0	19	51
08:00 AM	0	6	6	3	2	5	7	0	7	18
08:15 AM	0	9	9	1	0	1	2	0	2	12
08:30 AM	0	4	4	1	1	2	2	0	2	8
08:45 AM	0	6	6	2	0	2	1	0	1	9
Total	0	25	25	7	3	10	12	0	12	47
Grand Total	0	49	49	13	5	18	31	0	31	98
Apprch %	0	100		72.2	27.8		100	0		
Total %	0	50	50	13.3	5.1	18.4	31.6	0	31.6	

	Airport Drive Westbound			Terminal Way East Northbound			Airport Drive Eastbound			
Start Time	Left	Thru	App. Total	Left	Right	App. Total	Thru	Right	App. Total	Int. Total
Peak Hour Analysis From 07:30 AM to 08:15 AM - Peak 1 of 1										
Peak Hour for Entire Intersection Begins at 07:30 AM										
07:30 AM	0	8	8	1	0	1	3	0	3	12
07:45 AM	0	6	6	1	0	1	4	0	4	11
08:00 AM	0	6	6	**3**	**2**	**5**	**7**	0	**7**	**18**
08:15 AM	0	**9**	**9**	1	0	1	2	0	2	12
Total Volume	0	29	29	6	2	8	16	0	16	53
% App. Total	0	100		75	25		100	0		
PHF	.000	.806	.806	.500	.250	.400	.571	.000	.571	.736

Counts Unlimited, Inc.
PO Box 1178
Corona, CA 92878
(951)268-6268

City of Ontario
N/S: Terminal Way East
E/W: Airport Drive
Weather: Clear

File Name : 05_ONT_Term E_AP AM
Site Code : 00322818
Start Date : 9/20/2022
Page No : 2

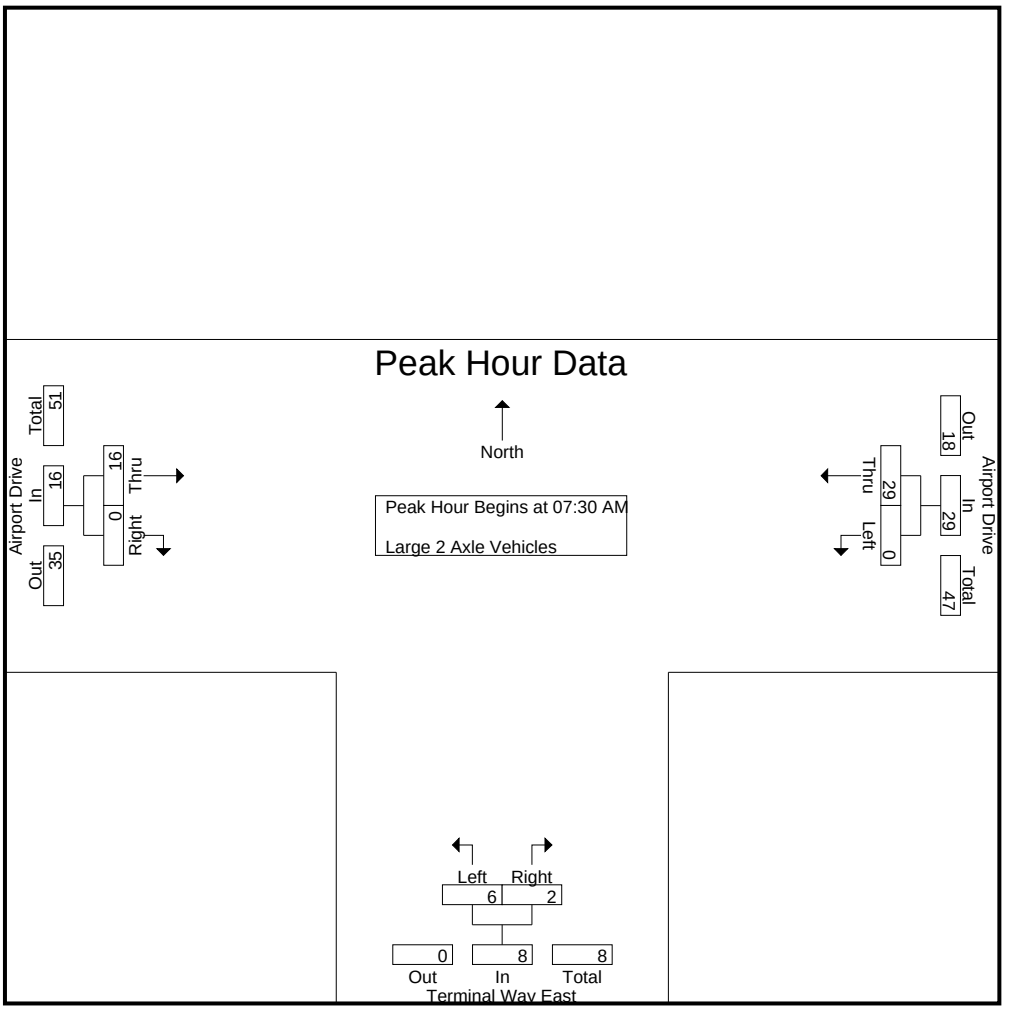

Peak Hour Analysis From 07:30 AM to 08:15 AM - Peak 1 of 1
Peak Hour for Each Approach Begins at:

	07:30 AM			07:30 AM			07:30 AM		
+0 mins.	0	8	8	1	0	1	3	0	3
+15 mins.	0	6	6	1	0	1	4	0	4
+30 mins.	0	6	6	**3**	**2**	**5**	**7**	0	**7**
+45 mins.	0	**9**	**9**	1	0	1	2	0	2
Total Volume	0	29	29	6	2	8	16	0	16
% App. Total	0	100		75	25		100	0	
PHF	.000	.806	.806	.500	.250	.400	.571	.000	.571

Counts Unlimited, Inc.
PO Box 1178
Corona, CA 92878
(951)268-6268

City of Ontario
N/S: Terminal Way East
E/W: Airport Drive
Weather: Clear

File Name : 05_ONT_Term E_AP AM
Site Code : 00322818
Start Date : 9/20/2022

Groups Printed- 3 Axle Vehicles

	Airport Drive Westbound			Terminal Way East Northbound			Airport Drive Eastbound			
Start Time	Left	Thru	App. Total	Left	Right	App. Total	Thru	Right	App. Total	Int. Total
07:00 AM	0	1	1	1	0	1	0	0	0	2
07:15 AM	0	1	1	0	0	0	1	0	1	2
07:30 AM	0	1	1	0	0	0	1	0	1	2
07:45 AM	0	0	0	0	0	0	1	0	1	1
Total	0	3	3	1	0	1	3	0	3	7
08:00 AM	0	1	1	0	0	0	1	0	1	2
08:15 AM	0	1	1	0	0	0	0	0	0	1
08:30 AM	0	2	2	0	0	0	1	0	1	3
08:45 AM	0	2	2	1	0	1	2	0	2	5
Total	0	6	6	1	0	1	4	0	4	11
Grand Total	0	9	9	2	0	2	7	0	7	18
Apprch %	0	100		100	0		100	0		
Total %	0	50	50	11.1	0	11.1	38.9	0	38.9	

	Airport Drive Westbound			Terminal Way East Northbound			Airport Drive Eastbound			
Start Time	Left	Thru	App. Total	Left	Right	App. Total	Thru	Right	App. Total	Int. Total
Peak Hour Analysis From 07:30 AM to 08:15 AM - Peak 1 of 1										
Peak Hour for Entire Intersection Begins at 07:30 AM										
07:30 AM	0	**1**	**1**	0	0	0	**1**	0	**1**	**2**
07:45 AM	0	0	0	0	0	0	1	0	1	1
08:00 AM	0	1	1	0	0	0	1	0	1	2
08:15 AM	0	1	1	0	0	0	0	0	0	1
Total Volume	0	3	3	0	0	0	3	0	3	6
% App. Total	0	100		0	0		100	0		
PHF	.000	.750	.750	.000	.000	.000	.750	.000	.750	.750

Counts Unlimited, Inc.
PO Box 1178
Corona, CA 92878
(951)268-6268

City of Ontario
N/S: Terminal Way East
E/W: Airport Drive
Weather: Clear

File Name : 05_ONT_Term E_AP AM
Site Code : 00322818
Start Date : 9/20/2022
Page No : 2

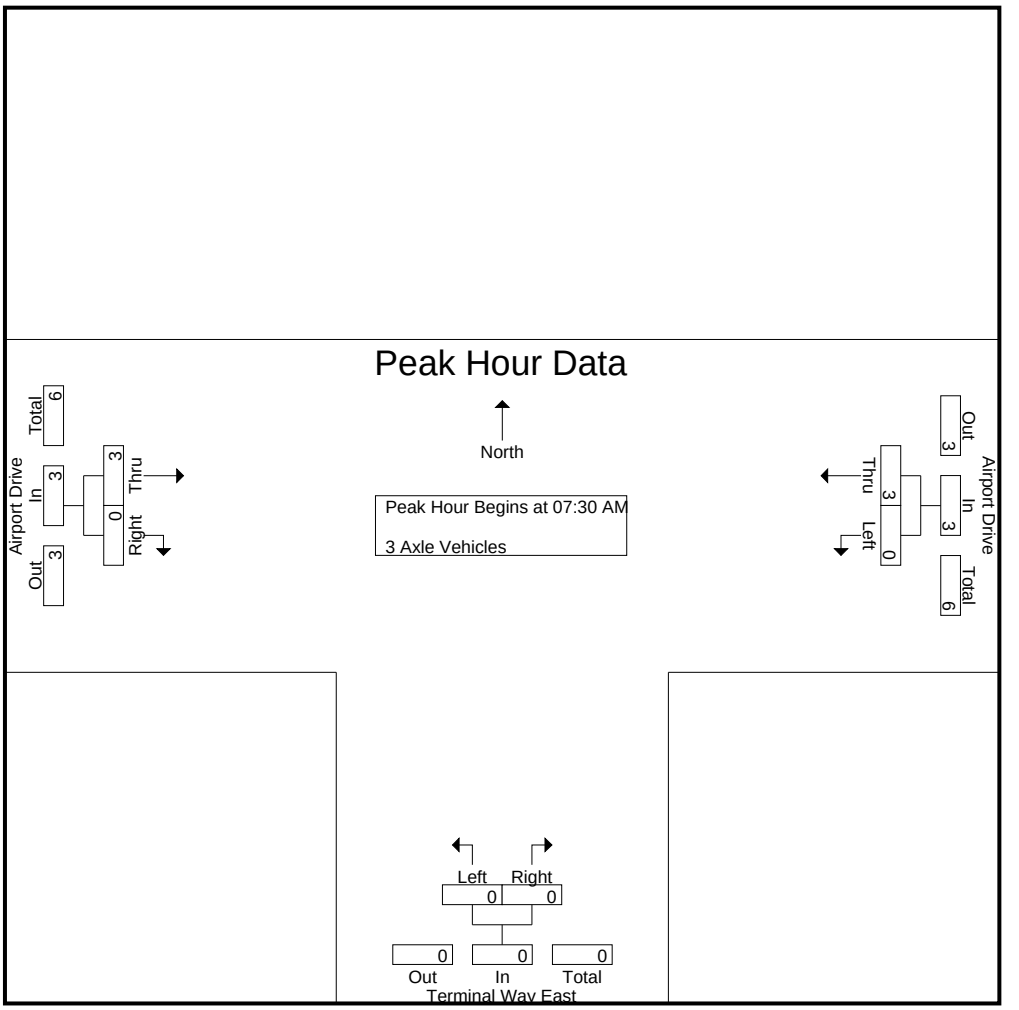

Peak Hour Analysis From 07:30 AM to 08:15 AM - Peak 1 of 1
Peak Hour for Each Approach Begins at:

	07:30 AM			07:30 AM			07:30 AM		
+0 mins.	0	**1**	**1**	0	0	0	**1**	0	**1**
+15 mins.	0	0	0	0	0	0	1	0	1
+30 mins.	0	1	1	0	0	0	1	0	1
+45 mins.	0	1	1	0	0	0	0	0	0
Total Volume	0	3	3	0	0	0	3	0	3
% App. Total	0	100		0	0		100	0	
PHF	.000	.750	.750	.000	.000	.000	.750	.000	.750

Counts Unlimited, Inc.
PO Box 1178
Corona, CA 92878
(951)268-6268

City of Ontario
N/S: Terminal Way East
E/W: Airport Drive
Weather: Clear

File Name : 05_ONT_Term E_AP AM
Site Code : 00322818
Start Date : 9/20/2022

Groups Printed- 4+ Axle Trucks

	Airport Drive Westbound			Terminal Way East Northbound			Airport Drive Eastbound			
Start Time	Left	Thru	App. Total	Left	Right	App. Total	Thru	Right	App. Total	Int. Total
07:00 AM	1	1	2	0	0	0	2	0	2	4
07:15 AM	0	1	1	0	0	0	1	0	1	2
07:30 AM	0	2	2	0	0	0	0	0	0	2
07:45 AM	0	6	6	0	1	1	0	0	0	7
Total	1	10	11	0	1	1	3	0	3	15
08:00 AM	0	6	6	0	0	0	2	0	2	8
08:15 AM	0	4	4	0	0	0	1	0	1	5
08:30 AM	0	2	2	0	0	0	3	0	3	5
08:45 AM	0	4	4	0	0	0	3	0	3	7
Total	0	16	16	0	0	0	9	0	9	25
Grand Total	1	26	27	0	1	1	12	0	12	40
Apprch %	3.7	96.3		0	100		100	0		
Total %	2.5	65	67.5	0	2.5	2.5	30	0	30	

	Airport Drive Westbound			Terminal Way East Northbound			Airport Drive Eastbound			
Start Time	Left	Thru	App. Total	Left	Right	App. Total	Thru	Right	App. Total	Int. Total
Peak Hour Analysis From 07:30 AM to 08:15 AM - Peak 1 of 1										
Peak Hour for Entire Intersection Begins at 07:30 AM										
07:30 AM	0	2	2	0	0	0	0	0	0	2
07:45 AM	0	**6**	**6**	0	**1**	**1**	0	0	0	7
08:00 AM	0	6	6	0	0	0	**2**	0	**2**	**8**
08:15 AM	0	4	4	0	0	0	1	0	1	5
Total Volume	0	18	18	0	1	1	3	0	3	22
% App. Total	0	100		0	100		100	0		
PHF	.000	.750	.750	.000	.250	.250	.375	.000	.375	.688

Counts Unlimited, Inc.
PO Box 1178
Corona, CA 92878
(951)268-6268

City of Ontario
N/S: Terminal Way East
E/W: Airport Drive
Weather: Clear

File Name : 05_ONT_Term E_AP AM
Site Code : 00322818
Start Date : 9/20/2022
Page No : 2

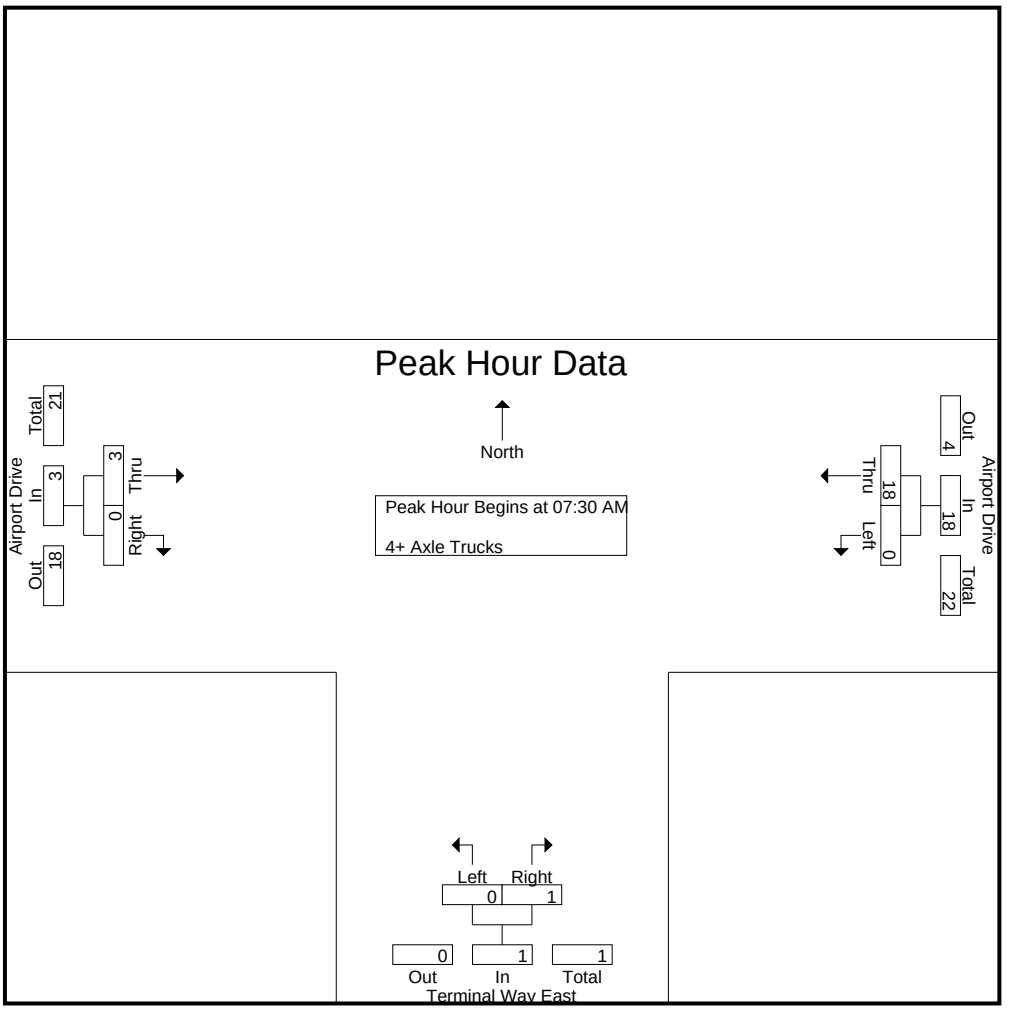

Peak Hour Analysis From 07:30 AM to 08:15 AM - Peak 1 of 1
Peak Hour for Each Approach Begins at:

	07:30 AM			07:30 AM			07:30 AM		
+0 mins.	0	2	2	0	0	0	0	0	0
+15 mins.	0	**6**	**6**	0	**1**	**1**	0	0	0
+30 mins.	0	6	6	0	0	0	**2**	0	**2**
+45 mins.	0	4	4	0	0	0	1	0	1
Total Volume	0	18	18	0	1	1	3	0	3
% App. Total	0	100		0	100		100	0	
PHF	.000	.750	.750	.000	.250	.250	.375	.000	.375

Counts Unlimited, Inc.
PO Box 1178
Corona, CA 92878
(951)268-6268

City of Ontario
N/S: Terminal Way East
E/W: Airport Drive
Weather: Clear

File Name : 05_ONT_Term E_AP PM
Site Code : 00322818
Start Date : 9/20/2022
Page No : 1

Groups Printed- Passenger Vehicles - Large 2 Axle Vehicles - 3 Axle Vehicles - 4+ Axle Trucks

	Airport Drive Westbound			Terminal Way East Northbound			Airport Drive Eastbound			
Start Time	Left	Thru	App. Total	Left	Right	App. Total	Thru	Right	App. Total	Int. Total
04:00 PM	21	218	239	14	16	30	238	2	240	509
04:15 PM	26	202	228	24	55	79	264	2	266	573
04:30 PM	16	197	213	48	89	137	291	2	293	643
04:45 PM	9	222	231	21	42	63	258	2	260	554
Total	72	839	911	107	202	309	1051	8	1059	2279
05:00 PM	13	200	213	24	33	57	278	1	279	549
05:15 PM	8	191	199	19	32	51	239	3	242	492
05:30 PM	14	151	165	19	36	55	248	5	253	473
05:45 PM	17	106	123	19	56	75	200	5	205	403
Total	52	648	700	81	157	238	965	14	979	1917
Grand Total	124	1487	1611	188	359	547	2016	22	2038	4196
Apprch %	7.7	92.3		34.4	65.6		98.9	1.1		
Total %	3	35.4	38.4	4.5	8.6	13	48	0.5	48.6	
Passenger Vehicles	123	1412	1535	174	357	531	1865	22	1887	3953
% Passenger Vehicles	99.2	95	95.3	92.6	99.4	97.1	92.5	100	92.6	94.2
Large 2 Axle Vehicles	0	52	52	14	1	15	72	0	72	139
% Large 2 Axle Vehicles	0	3.5	3.2	7.4	0.3	2.7	3.6	0	3.5	3.3
3 Axle Vehicles	1	9	10	0	1	1	23	0	23	34
% 3 Axle Vehicles	0.8	0.6	0.6	0	0.3	0.2	1.1	0	1.1	0.8
4+ Axle Trucks	0	14	14	0	0	0	56	0	56	70
% 4+ Axle Trucks	0	0.9	0.9	0	0	0	2.8	0	2.7	1.7

	Airport Drive Westbound			Terminal Way East Northbound			Airport Drive Eastbound			
Start Time	Left	Thru	App. Total	Left	Right	App. Total	Thru	Right	App. Total	Int. Total
Peak Hour Analysis From 04:00 PM to 05:45 PM - Peak 1 of 1										
Peak Hour for Entire Intersection Begins at 04:15 PM										
04:15 PM	**26**	202	228	24	55	79	264	**2**	266	573
04:30 PM	16	197	213	**48**	**89**	**137**	**291**	2	**293**	**643**
04:45 PM	9	**222**	**231**	21	42	63	258	2	260	554
05:00 PM	13	200	213	24	33	57	278	1	279	549
Total Volume	64	821	885	117	219	336	1091	7	1098	2319
% App. Total	7.2	92.8		34.8	65.2		99.4	0.6		
PHF	.615	.925	.958	.609	.615	.613	.937	.875	.937	.902

Counts Unlimited, Inc.
PO Box 1178
Corona, CA 92878
(951)268-6268

City of Ontario
N/S: Terminal Way East
E/W: Airport Drive
Weather: Clear

File Name : 05_ONT_Term E_AP PM
Site Code : 00322818
Start Date : 9/20/2022

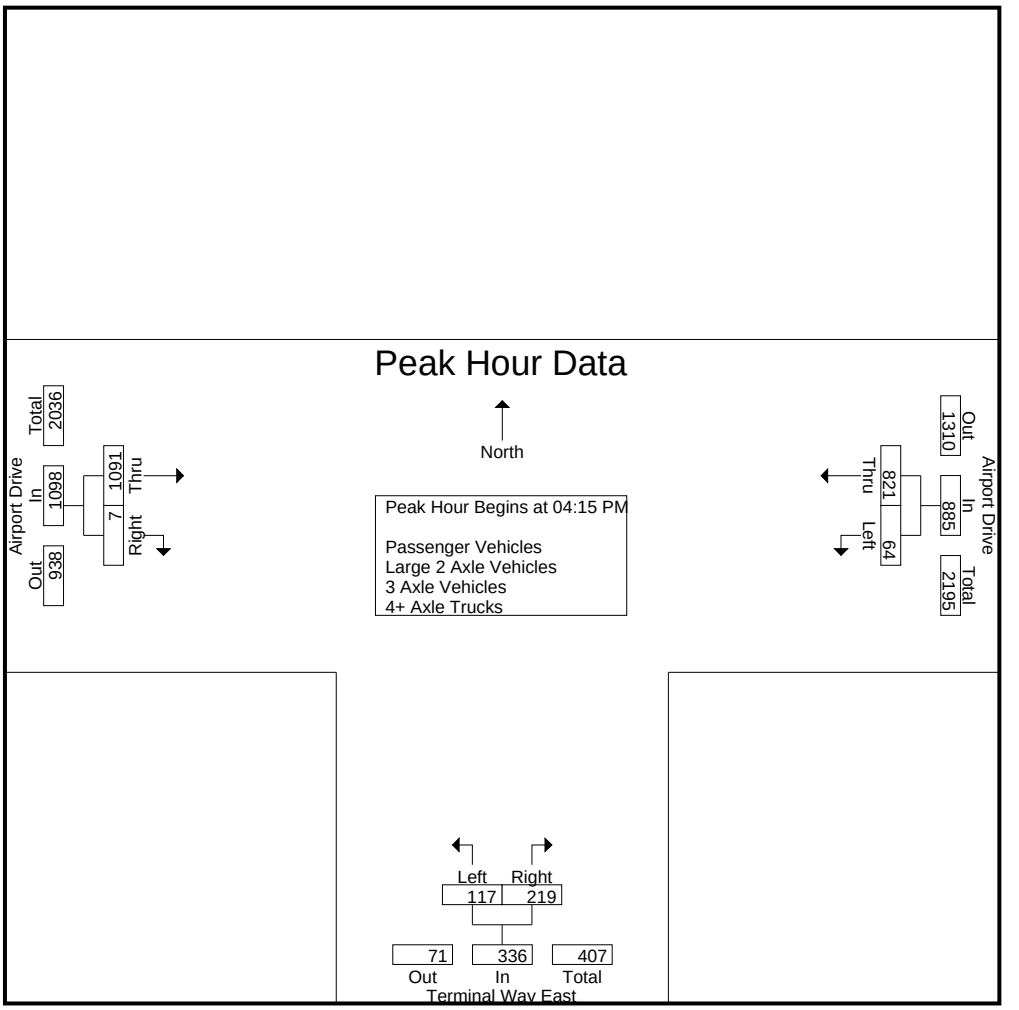

Peak Hour Analysis From 04:00 PM to 05:45 PM - Peak 1 of 1
Peak Hour for Each Approach Begins at:

	04:00 PM			04:15 PM			04:15 PM		
+0 mins.	21	218	**239**	24	55	79	264	**2**	266
+15 mins.	**26**	202	228	**48**	**89**	**137**	**291**	2	**293**
+30 mins.	16	197	213	21	42	63	258	2	260
+45 mins.	9	**222**	231	24	33	57	278	1	279
Total Volume	72	839	911	117	219	336	1091	7	1098
% App. Total	7.9	92.1		34.8	65.2		99.4	0.6	
PHF	.692	.945	.953	.609	.615	.613	.937	.875	.937

Counts Unlimited, Inc.
PO Box 1178
Corona, CA 92878
(951)268-6268

City of Ontario
N/S: Terminal Way East
E/W: Airport Drive
Weather: Clear

File Name : 05_ONT_Term E_AP PM
Site Code : 00322818
Start Date : 9/20/2022
Page No : 1

Groups Printed- Passenger Vehicles

	Airport Drive Westbound			Terminal Way East Northbound			Airport Drive Eastbound			
Start Time	Left	Thru	App. Total	Left	Right	App. Total	Thru	Right	App. Total	Int. Total
04:00 PM	21	210	231	13	15	28	224	2	226	485
04:15 PM	26	193	219	22	55	77	239	2	241	537
04:30 PM	16	189	205	46	89	135	265	2	267	607
04:45 PM	9	207	216	20	42	62	231	2	233	511
Total	72	799	871	101	201	302	959	8	967	2140
05:00 PM	12	190	202	21	33	54	262	1	263	519
05:15 PM	8	182	190	17	32	49	227	3	230	469
05:30 PM	14	142	156	17	36	53	232	5	237	446
05:45 PM	17	99	116	18	55	73	185	5	190	379
Total	51	613	664	73	156	229	906	14	920	1813
Grand Total	123	1412	1535	174	357	531	1865	22	1887	3953
Apprch %	8	92		32.8	67.2		98.8	1.2		
Total %	3.1	35.7	38.8	4.4	9	13.4	47.2	0.6	47.7	

	Airport Drive Westbound			Terminal Way East Northbound			Airport Drive Eastbound			
Start Time	Left	Thru	App. Total	Left	Right	App. Total	Thru	Right	App. Total	Int. Total
Peak Hour Analysis From 04:15 PM to 05:00 PM - Peak 1 of 1										
Peak Hour for Entire Intersection Begins at 04:15 PM										
04:15 PM	**26**	193	**219**	22	55	77	239	**2**	241	537
04:30 PM	16	189	205	**46**	**89**	**135**	**265**	2	**267**	**607**
04:45 PM	9	**207**	216	20	42	62	231	2	233	511
05:00 PM	12	190	202	21	33	54	262	1	263	519
Total Volume	63	779	842	109	219	328	997	7	1004	2174
% App. Total	7.5	92.5		33.2	66.8		99.3	0.7		
PHF	.606	.941	.961	.592	.615	.607	.941	.875	.940	.895

Counts Unlimited, Inc.
PO Box 1178
Corona, CA 92878
(951)268-6268

City of Ontario
N/S: Terminal Way East
E/W: Airport Drive
Weather: Clear

File Name : 05_ONT_Term E_AP PM
Site Code : 00322818
Start Date : 9/20/2022

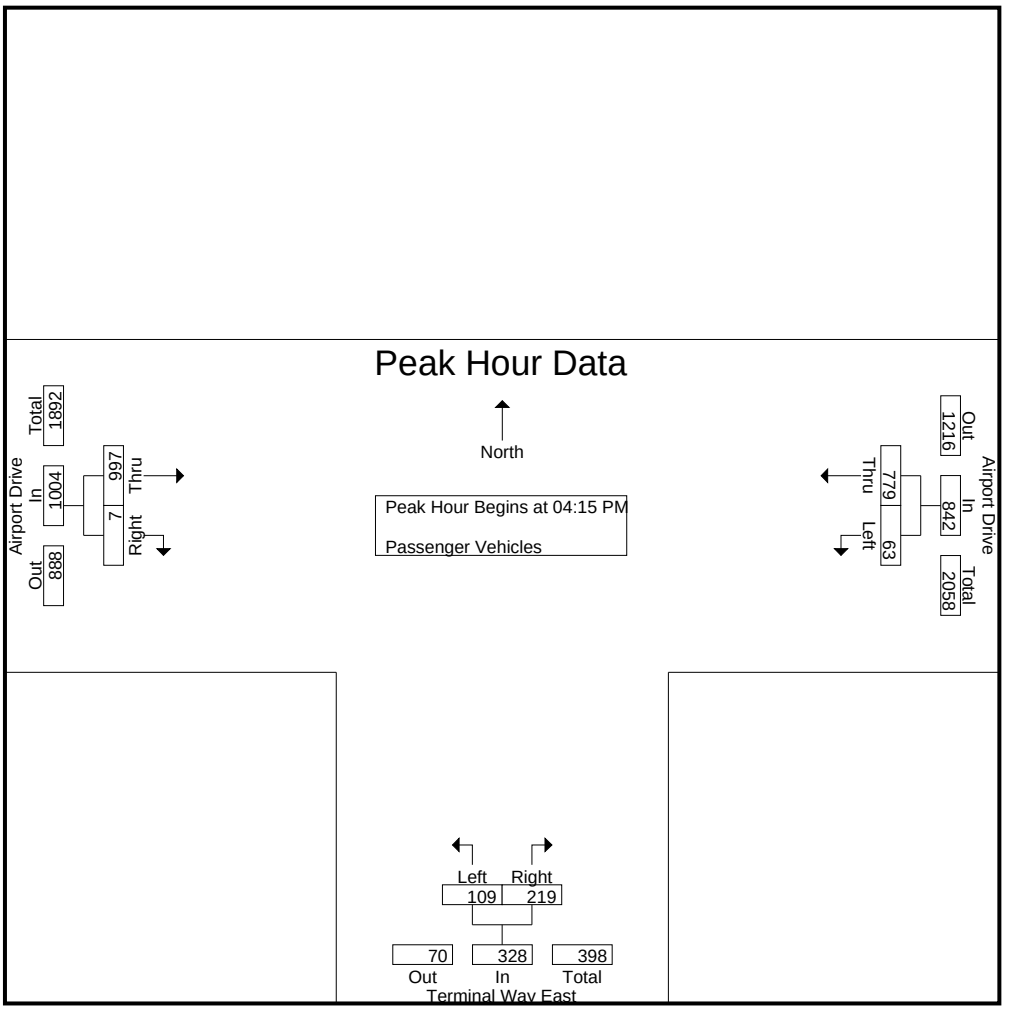

Peak Hour Analysis From 04:15 PM to 05:00 PM - Peak 1 of 1
Peak Hour for Each Approach Begins at:

	04:15 PM			04:15 PM			04:15 PM		
+0 mins.	**26**	193	**219**	22	55	77	239	**2**	241
+15 mins.	16	189	205	**46**	**89**	**135**	**265**	2	**267**
+30 mins.	9	**207**	216	20	42	62	231	2	233
+45 mins.	12	190	202	21	33	54	262	1	263
Total Volume	63	779	842	109	219	328	997	7	1004
% App. Total	7.5	92.5		33.2	66.8		99.3	0.7	
PHF	.606	.941	.961	.592	.615	.607	.941	.875	.940

Counts Unlimited, Inc.
PO Box 1178
Corona, CA 92878
(951)268-6268

City of Ontario
N/S: Terminal Way East
E/W: Airport Drive
Weather: Clear

File Name : 05_ONT_Term E_AP PM
Site Code : 00322818
Start Date : 9/20/2022

Groups Printed- Large 2 Axle Vehicles

	Airport Drive Westbound			Terminal Way East Northbound			Airport Drive Eastbound			
Start Time	Left	Thru	App. Total	Left	Right	App. Total	Thru	Right	App. Total	Int. Total
04:00 PM	0	6	6	1	0	1	8	0	8	15
04:15 PM	0	5	5	2	0	2	10	0	10	17
04:30 PM	0	6	6	2	0	2	13	0	13	21
04:45 PM	0	8	8	1	0	1	12	0	12	21
Total	0	25	25	6	0	6	43	0	43	74
05:00 PM	0	7	7	3	0	3	5	0	5	15
05:15 PM	0	7	7	2	0	2	8	0	8	17
05:30 PM	0	7	7	2	0	2	8	0	8	17
05:45 PM	0	6	6	1	1	2	8	0	8	16
Total	0	27	27	8	1	9	29	0	29	65
Grand Total	0	52	52	14	1	15	72	0	72	139
Apprch %	0	100		93.3	6.7		100	0		
Total %	0	37.4	37.4	10.1	0.7	10.8	51.8	0	51.8	

	Airport Drive Westbound			Terminal Way East Northbound			Airport Drive Eastbound			
Start Time	Left	Thru	App. Total	Left	Right	App. Total	Thru	Right	App. Total	Int. Total
Peak Hour Analysis From 04:15 PM to 05:00 PM - Peak 1 of 1										
Peak Hour for Entire Intersection Begins at 04:15 PM										
04:15 PM	0	5	5	2	0	2	10	0	10	17
04:30 PM	0	6	6	2	0	2	**13**	0	**13**	**21**
04:45 PM	0	**8**	**8**	1	0	1	12	0	12	21
05:00 PM	0	7	7	**3**	0	**3**	5	0	5	15
Total Volume	0	26	26	8	0	8	40	0	40	74
% App. Total	0	100		100	0		100	0		
PHF	.000	.813	.813	.667	.000	.667	.769	.000	.769	.881

Counts Unlimited, Inc.
PO Box 1178
Corona, CA 92878
(951)268-6268

City of Ontario
N/S: Terminal Way East
E/W: Airport Drive
Weather: Clear

File Name : 05_ONT_Term E_AP PM
Site Code : 00322818
Start Date : 9/20/2022
Page No : 2

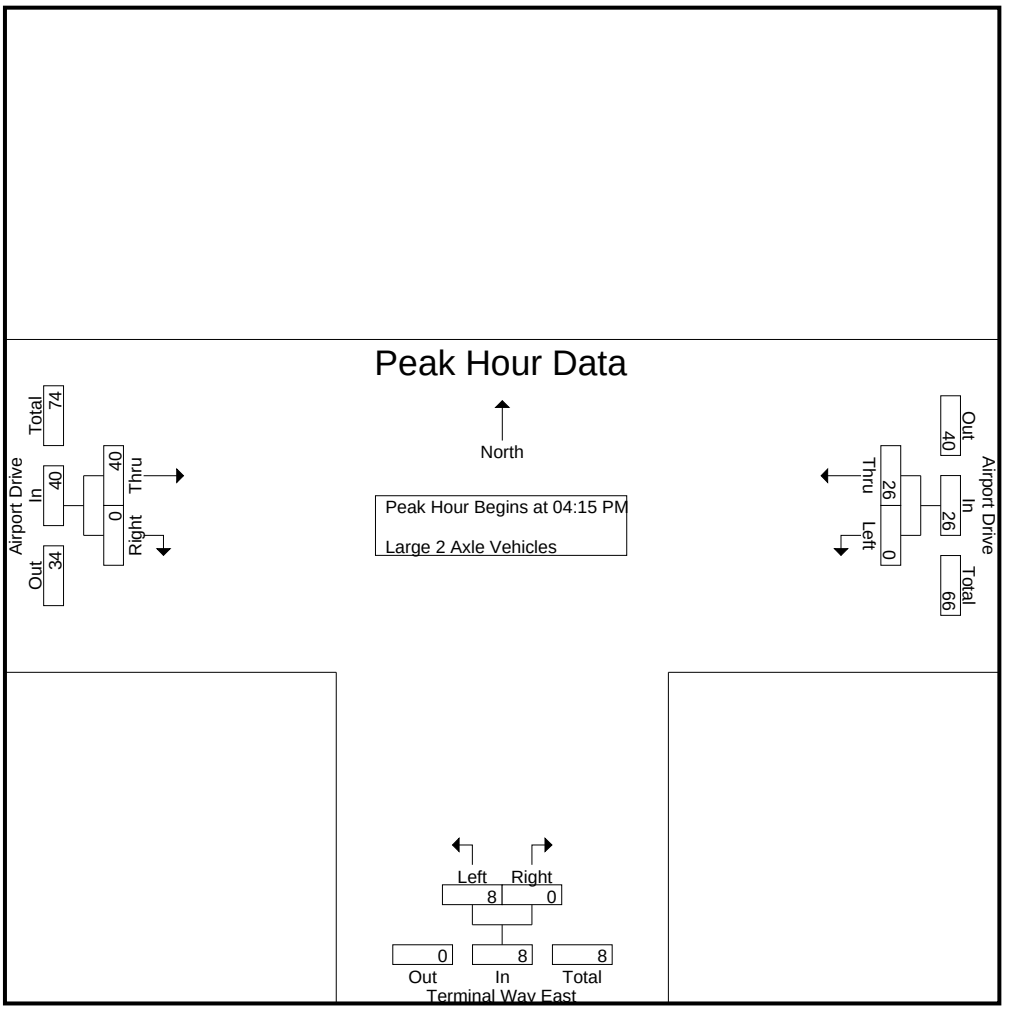

Peak Hour Analysis From 04:15 PM to 05:00 PM - Peak 1 of 1
Peak Hour for Each Approach Begins at:

	04:15 PM			04:15 PM			04:15 PM		
+0 mins.	0	5	5	2	0	2	10	0	10
+15 mins.	0	6	6	2	0	2	**13**	0	**13**
+30 mins.	0	**8**	**8**	1	0	1	12	0	12
+45 mins.	0	7	7	**3**	0	**3**	5	0	5
Total Volume	0	26	26	8	0	8	40	0	40
% App. Total	0	100		100	0		100	0	
PHF	.000	.813	.813	.667	.000	.667	.769	.000	.769

Counts Unlimited, Inc.
PO Box 1178
Corona, CA 92878
(951)268-6268

City of Ontario
N/S: Terminal Way East
E/W: Airport Drive
Weather: Clear

File Name : 05_ONT_Term E_AP PM
Site Code : 00322818
Start Date : 9/20/2022
Page No : 1

Groups Printed- 3 Axle Vehicles

	Airport Drive Westbound			Terminal Way East Northbound			Airport Drive Eastbound			
Start Time	Left	Thru	App. Total	Left	Right	App. Total	Thru	Right	App. Total	Int. Total
04:00 PM	0	0	0	0	1	1	1	0	1	2
04:15 PM	0	3	3	0	0	0	4	0	4	7
04:30 PM	0	0	0	0	0	0	4	0	4	4
04:45 PM	0	2	2	0	0	0	4	0	4	6
Total	0	5	5	0	1	1	13	0	13	19
05:00 PM	1	1	2	0	0	0	5	0	5	7
05:15 PM	0	1	1	0	0	0	3	0	3	4
05:30 PM	0	1	1	0	0	0	0	0	0	1
05:45 PM	0	1	1	0	0	0	2	0	2	3
Total	1	4	5	0	0	0	10	0	10	15
Grand Total	1	9	10	0	1	1	23	0	23	34
Apprch %	10	90		0	100		100	0		
Total %	2.9	26.5	29.4	0	2.9	2.9	67.6	0	67.6	

	Airport Drive Westbound			Terminal Way East Northbound			Airport Drive Eastbound			
Start Time	Left	Thru	App. Total	Left	Right	App. Total	Thru	Right	App. Total	Int. Total
Peak Hour Analysis From 04:15 PM to 05:00 PM - Peak 1 of 1										
Peak Hour for Entire Intersection Begins at 04:15 PM										
04:15 PM	0	**3**	**3**	0	0	0	4	0	4	**7**
04:30 PM	0	0	0	0	0	0	4	0	4	4
04:45 PM	0	2	2	0	0	0	4	0	4	6
05:00 PM	**1**	1	2	0	0	0	**5**	0	**5**	7
Total Volume	1	6	7	0	0	0	17	0	17	24
% App. Total	14.3	85.7		0	0		100	0		
PHF	.250	.500	.583	.000	.000	.000	.850	.000	.850	.857

Counts Unlimited, Inc.
PO Box 1178
Corona, CA 92878
(951)268-6268

City of Ontario
N/S: Terminal Way East
E/W: Airport Drive
Weather: Clear

File Name : 05_ONT_Term E_AP PM
Site Code : 00322818
Start Date : 9/20/2022
Page No : 2

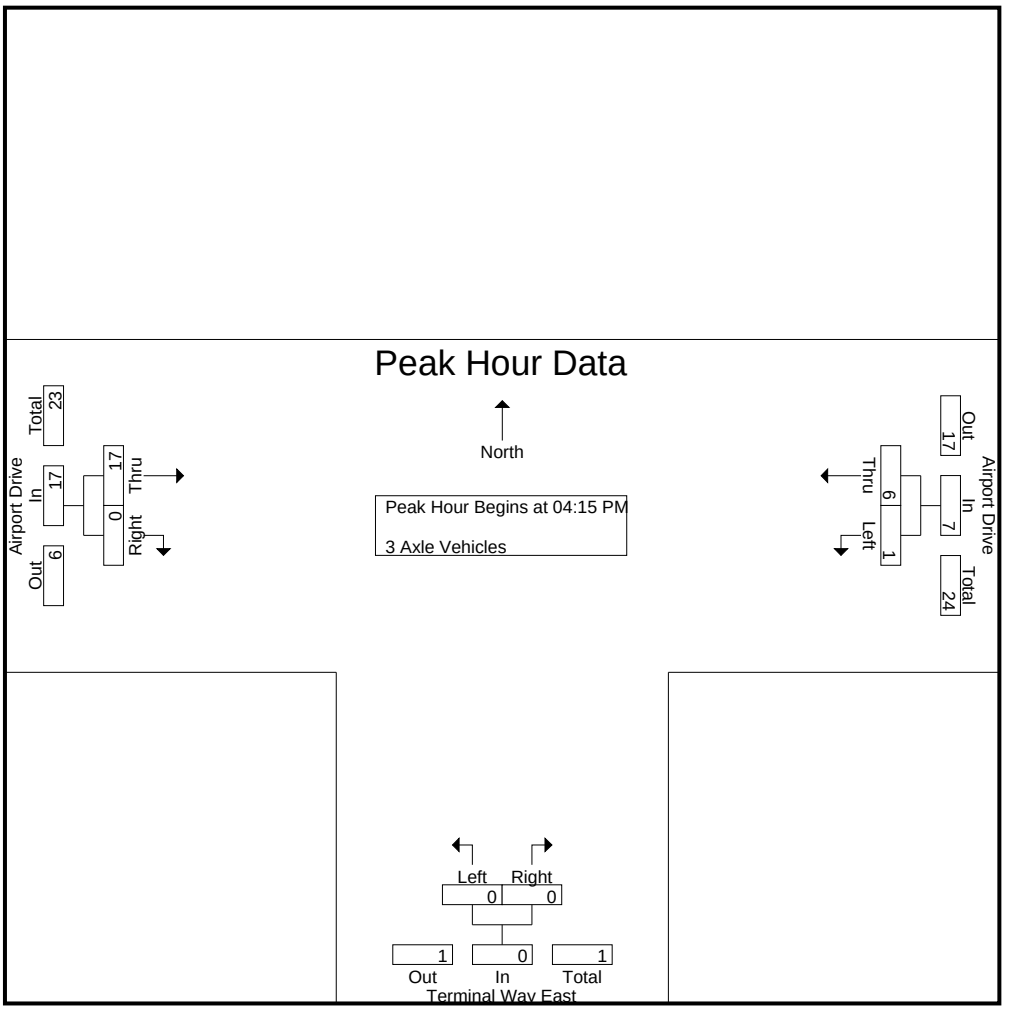

Peak Hour Analysis From 04:15 PM to 05:00 PM - Peak 1 of 1
Peak Hour for Each Approach Begins at:

	04:15 PM			04:15 PM			04:15 PM		
+0 mins.	0	**3**	**3**	0	0	0	4	0	4
+15 mins.	0	0	0	0	0	0	4	0	4
+30 mins.	0	2	2	0	0	0	4	0	4
+45 mins.	**1**	1	2	0	0	0	**5**	0	**5**
Total Volume	1	6	7	0	0	0	17	0	17
% App. Total	14.3	85.7		0	0		100	0	
PHF	.250	.500	.583	.000	.000	.000	.850	.000	.850

Counts Unlimited, Inc.
PO Box 1178
Corona, CA 92878
(951)268-6268

City of Ontario
N/S: Terminal Way East
E/W: Airport Drive
Weather: Clear

File Name : 05_ONT_Term E_AP PM
Site Code : 00322818
Start Date : 9/20/2022
Page No : 1

Groups Printed- 4+ Axle Trucks

	Airport Drive Westbound			Terminal Way East Northbound			Airport Drive Eastbound			
Start Time	Left	Thru	App. Total	Left	Right	App. Total	Thru	Right	App. Total	Int. Total
04:00 PM	0	2	2	0	0	0	5	0	5	7
04:15 PM	0	1	1	0	0	0	11	0	11	12
04:30 PM	0	2	2	0	0	0	9	0	9	11
04:45 PM	0	5	5	0	0	0	11	0	11	16
Total	0	10	10	0	0	0	36	0	36	46
05:00 PM	0	2	2	0	0	0	6	0	6	8
05:15 PM	0	1	1	0	0	0	1	0	1	2
05:30 PM	0	1	1	0	0	0	8	0	8	9
05:45 PM	0	0	0	0	0	0	5	0	5	5
Total	0	4	4	0	0	0	20	0	20	24
Grand Total	0	14	14	0	0	0	56	0	56	70
Apprch %	0	100		0	0		100	0		
Total %	0	20	20	0	0	0	80	0	80	

	Airport Drive Westbound			Terminal Way East Northbound			Airport Drive Eastbound			
Start Time	Left	Thru	App. Total	Left	Right	App. Total	Thru	Right	App. Total	Int. Total
Peak Hour Analysis From 04:15 PM to 05:00 PM - Peak 1 of 1										
Peak Hour for Entire Intersection Begins at 04:15 PM										
04:15 PM	0	1	1	0	0	0	**11**	0	**11**	12
04:30 PM	0	2	2	0	0	0	9	0	9	11
04:45 PM	0	**5**	**5**	0	0	0	11	0	11	**16**
05:00 PM	0	2	2	0	0	0	6	0	6	8
Total Volume	0	10	10	0	0	0	37	0	37	47
% App. Total	0	100		0	0		100	0		
PHF	.000	.500	.500	.000	.000	.000	.841	.000	.841	.734

Counts Unlimited, Inc.
PO Box 1178
Corona, CA 92878
(951)268-6268

City of Ontario
N/S: Terminal Way East
E/W: Airport Drive
Weather: Clear

File Name : 05_ONT_Term E_AP PM
Site Code : 00322818
Start Date : 9/20/2022
Page No : 2

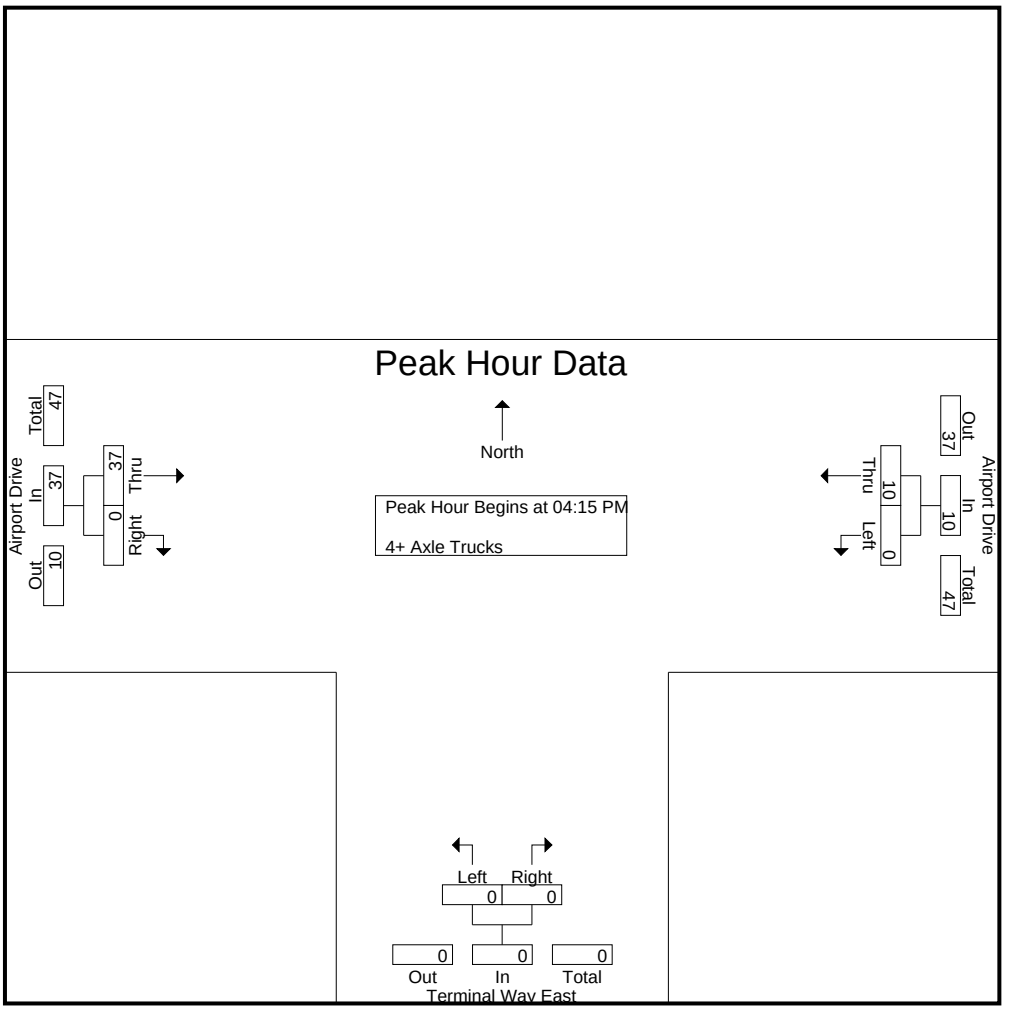

Peak Hour Analysis From 04:15 PM to 05:00 PM - Peak 1 of 1
Peak Hour for Each Approach Begins at:

	04:15 PM			04:15 PM			04:15 PM		
+0 mins.	0	1	1	0	0	0	**11**	0	**11**
+15 mins.	0	2	2	0	0	0	9	0	9
+30 mins.	0	**5**	**5**	0	0	0	11	0	11
+45 mins.	0	2	2	0	0	0	6	0	6
Total Volume	0	10	10	0	0	0	37	0	37
% App. Total	0	100		0	0		100	0	
PHF	.000	.500	.500	.000	.000	.000	.841	.000	.841

Location: Ontario
N/S: Terminal Way East
E/W: Airport Drive

Date: 9/20/2022
Day: Tuesday

PEDESTRIANS

	North Leg Dead End	East Leg Airport Drive	South Leg Terminal Way East	West Leg Airport Drive	
	Pedestrians	Pedestrians	Pedestrians	Pedestrians	
7:00 AM	0	0	0	0	0
7:15 AM	0	0	0	0	0
7:30 AM	0	0	0	0	0
7:45 AM	0	0	0	0	0
8:00 AM	0	0	0	0	0
8:15 AM	0	0	0	0	0
8:30 AM	0	0	1	0	1
8:45 AM	0	0	0	0	0
TOTAL VOLUMES:	0	0	1	0	1

	North Leg Dead End	East Leg Airport Drive	South Leg Terminal Way East	West Leg Airport Drive	
	Pedestrians	Pedestrians	Pedestrians	Pedestrians	
4:00 PM	0	0	0	0	0
4:15 PM	0	0	0	0	0
4:30 PM	0	0	0	0	0
4:45 PM	0	0	0	0	0
5:00 PM	0	0	0	0	0
5:15 PM	0	0	0	0	0
5:30 PM	0	0	0	0	0
5:45 PM	0	0	0	0	0
TOTAL VOLUMES:	0	0	0	0	0

Counts Unlimited, Inc.
PO Box 1178
Corona, CA 92878
951-268-6268

Location: Ontario
N/S: Terminal Way East
E/W: Airport Drive

Date: 9/20/2022
Day: Tuesday

BICYCLES

	Southbound Dead End			Westbound Airport Drive			Northbound Terminal Way East			Eastbound Airport Drive			
	Left	Thru	Right	Left	Thru	Right	Left	Thru	Right	Left	Thru	Right	
7:00 AM	0	0	0	0	0	0	0	0	0	0	0	0	0
7:15 AM	0	0	0	0	0	0	0	0	0	0	0	0	0
7:30 AM	0	0	0	0	0	0	0	0	0	0	0	0	0
7:45 AM	0	0	0	0	0	0	0	0	0	0	0	0	0
8:00 AM	0	0	0	0	0	0	0	0	0	0	0	0	0
8:15 AM	0	0	0	0	0	0	0	0	0	0	0	0	0
8:30 AM	0	0	0	0	0	0	0	0	0	0	0	0	0
8:45 AM	0	0	0	0	0	0	0	0	0	0	0	0	0
TOTAL VOLUMES:	0	0	0	0	0	0	0	0	0	0	0	0	0

	Southbound Dead End			Westbound Airport Drive			Northbound Terminal Way East			Eastbound Airport Drive			
	Left	Thru	Right	Left	Thru	Right	Left	Thru	Right	Left	Thru	Right	
4:00 PM	0	0	0	0	0	0	0	0	0	0	0	0	0
4:15 PM	0	0	0	0	0	0	0	0	0	0	0	0	0
4:30 PM	0	0	0	0	0	0	0	0	0	0	0	0	0
4:45 PM	0	0	0	0	0	0	0	0	0	0	0	0	0
5:00 PM	0	0	0	0	0	0	0	0	0	0	0	0	0
5:15 PM	0	0	0	0	0	0	0	0	0	0	0	0	0
5:30 PM	0	0	0	0	0	0	0	0	0	0	0	0	0
5:45 PM	0	0	0	0	0	0	0	0	0	0	0	0	0
TOTAL VOLUMES:	0	0	0	0	0	0	0	0	0	0	0	0	0

Counts Unlimited, Inc.
PO Box 1178
Corona, CA 92878
951-268-6268

Counts Unlimited, Inc.
PO Box 1178
Corona, CA 92878
(951)268-6268

City of Ontario
N/S: Rental Car Road
E/W: Airport Drive
Weather: Clear

File Name : 06_ONT_RC_AP AM
Site Code : 00322818
Start Date : 9/20/2022
Page No : 1

Groups Printed- Passenger Vehicles - Large 2 Axle Vehicles - 3 Axle Vehicles - 4+ Axle Trucks

	Airport Drive Westbound			Rental Car Road Northbound			Airport Drive Eastbound			
Start Time	Left	Thru	App. Total	Left	Right	App. Total	Thru	Right	App. Total	Int. Total
07:00 AM	15	126	141	4	6	10	146	9	155	306
07:15 AM	22	119	141	16	10	26	133	8	141	308
07:30 AM	14	146	160	19	8	27	148	8	156	343
07:45 AM	19	158	177	14	14	28	207	11	218	423
Total	70	549	619	53	38	91	634	36	670	1380
08:00 AM	17	171	188	13	13	26	146	12	158	372
08:15 AM	16	175	191	14	18	32	133	12	145	368
08:30 AM	23	157	180	12	11	23	128	10	138	341
08:45 AM	23	154	177	18	13	31	121	8	129	337
Total	79	657	736	57	55	112	528	42	570	1418
Grand Total	149	1206	1355	110	93	203	1162	78	1240	2798
Apprch %	11	89		54.2	45.8		93.7	6.3		
Total %	5.3	43.1	48.4	3.9	3.3	7.3	41.5	2.8	44.3	
Passenger Vehicles	137	1145	1282	88	85	173	1110	74	1184	2639
% Passenger Vehicles	91.9	94.9	94.6	80	91.4	85.2	95.5	94.9	95.5	94.3
Large 2 Axle Vehicles	7	26	33	22	1	23	31	4	35	91
% Large 2 Axle Vehicles	4.7	2.2	2.4	20	1.1	11.3	2.7	5.1	2.8	3.3
3 Axle Vehicles	3	7	10	0	5	5	8	0	8	23
% 3 Axle Vehicles	2	0.6	0.7	0	5.4	2.5	0.7	0	0.6	0.8
4+ Axle Trucks	2	28	30	0	2	2	13	0	13	45
% 4+ Axle Trucks	1.3	2.3	2.2	0	2.2	1	1.1	0	1	1.6

	Airport Drive Westbound			Rental Car Road Northbound			Airport Drive Eastbound			
Start Time	Left	Thru	App. Total	Left	Right	App. Total	Thru	Right	App. Total	Int. Total
Peak Hour Analysis From 07:00 AM to 08:45 AM - Peak 1 of 1										
Peak Hour for Entire Intersection Begins at 07:30 AM										
07:30 AM	14	146	160	**19**	8	27	148	8	156	343
07:45 AM	**19**	158	177	14	14	28	**207**	11	**218**	**423**
08:00 AM	17	171	188	13	13	26	146	**12**	158	372
08:15 AM	16	**175**	**191**	14	**18**	**32**	133	12	145	368
Total Volume	66	650	716	60	53	113	634	43	677	1506
% App. Total	9.2	90.8		53.1	46.9		93.6	6.4		
PHF	.868	.929	.937	.789	.736	.883	.766	.896	.776	.890

Counts Unlimited, Inc.
PO Box 1178
Corona, CA 92878
(951)268-6268

City of Ontario
N/S: Rental Car Road
E/W: Airport Drive
Weather: Clear

File Name : 06_ONT_RC_AP AM
Site Code : 00322818
Start Date : 9/20/2022
Page No : 2

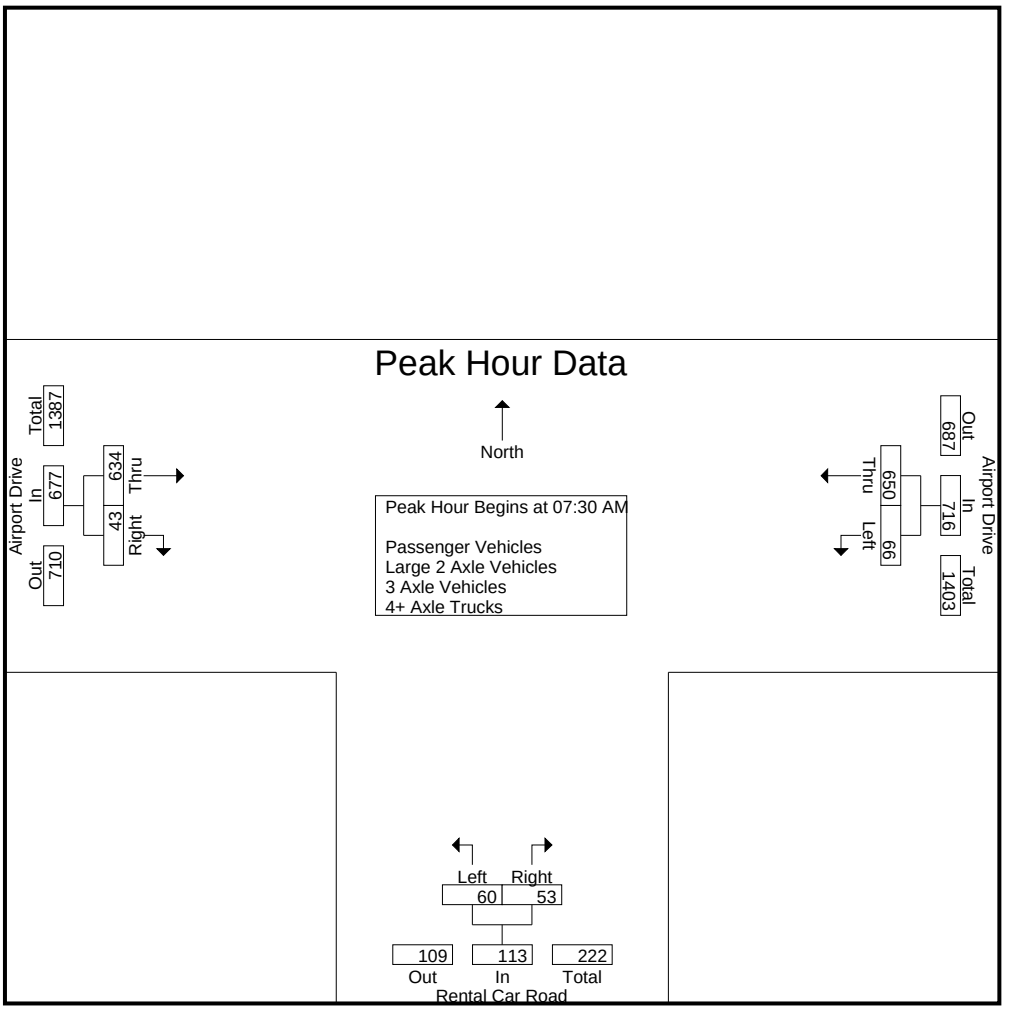

Peak Hour Analysis From 07:00 AM to 08:45 AM - Peak 1 of 1
Peak Hour for Each Approach Begins at:

	07:45 AM			07:30 AM			07:30 AM		
+0 mins.	19	158	177	**19**	8	27	148	8	156
+15 mins.	17	171	188	14	14	28	**207**	11	**218**
+30 mins.	16	**175**	**191**	13	13	26	146	**12**	158
+45 mins.	**23**	157	180	14	**18**	**32**	133	12	145
Total Volume	75	661	736	60	53	113	634	43	677
% App. Total	10.2	89.8		53.1	46.9		93.6	6.4	
PHF	.815	.944	.963	.789	.736	.883	.766	.896	.776

Counts Unlimited, Inc.
PO Box 1178
Corona, CA 92878
(951)268-6268

City of Ontario
N/S: Rental Car Road
E/W: Airport Drive
Weather: Clear

File Name : 06_ONT_RC_AP AM
Site Code : 00322818
Start Date : 9/20/2022
Page No : 1

Groups Printed- Passenger Vehicles

	Airport Drive Westbound			Rental Car Road Northbound			Airport Drive Eastbound			
Start Time	Left	Thru	App. Total	Left	Right	App. Total	Thru	Right	App. Total	Int. Total
07:00 AM	11	122	133	1	3	4	135	7	142	279
07:15 AM	20	114	134	13	10	23	125	8	133	290
07:30 AM	13	138	151	16	8	24	145	7	152	327
07:45 AM	19	149	168	11	12	23	202	11	213	404
Total	63	523	586	41	33	74	607	33	640	1300
08:00 AM	15	158	173	10	13	23	136	11	147	343
08:15 AM	14	168	182	10	17	27	131	12	143	352
08:30 AM	22	151	173	11	10	21	121	10	131	325
08:45 AM	23	145	168	16	12	28	115	8	123	319
Total	74	622	696	47	52	99	503	41	544	1339
Grand Total	137	1145	1282	88	85	173	1110	74	1184	2639
Apprch %	10.7	89.3		50.9	49.1		93.8	6.2		
Total %	5.2	43.4	48.6	3.3	3.2	6.6	42.1	2.8	44.9	

	Airport Drive Westbound			Rental Car Road Northbound			Airport Drive Eastbound			
Start Time	Left	Thru	App. Total	Left	Right	App. Total	Thru	Right	App. Total	Int. Total
Peak Hour Analysis From 07:30 AM to 08:15 AM - Peak 1 of 1										
Peak Hour for Entire Intersection Begins at 07:30 AM										
07:30 AM	13	138	151	**16**	8	24	145	7	152	327
07:45 AM	**19**	149	168	11	12	23	**202**	11	**213**	**404**
08:00 AM	15	158	173	10	13	23	136	11	147	343
08:15 AM	14	**168**	**182**	10	**17**	**27**	131	**12**	143	352
Total Volume	61	613	674	47	50	97	614	41	655	1426
% App. Total	9.1	90.9		48.5	51.5		93.7	6.3		
PHF	.803	.912	.926	.734	.735	.898	.760	.854	.769	.882

Counts Unlimited, Inc.
PO Box 1178
Corona, CA 92878
(951)268-6268

City of Ontario
N/S: Rental Car Road
E/W: Airport Drive
Weather: Clear

File Name : 06_ONT_RC_AP AM
Site Code : 00322818
Start Date : 9/20/2022
Page No : 2

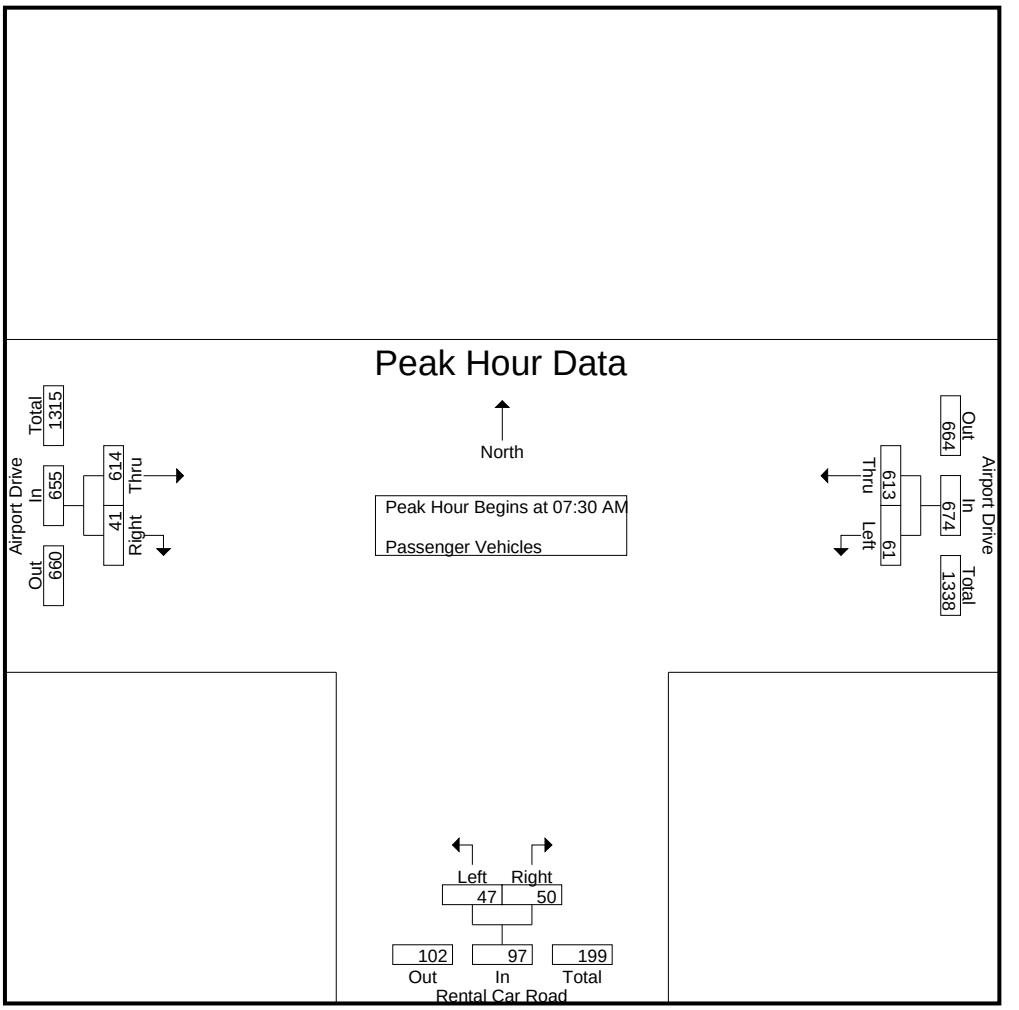

Peak Hour Analysis From 07:30 AM to 08:15 AM - Peak 1 of 1
Peak Hour for Each Approach Begins at:

	07:30 AM			07:30 AM			07:30 AM		
+0 mins.	13	138	151	**16**	8	24	145	7	152
+15 mins.	**19**	149	168	11	12	23	**202**	11	**213**
+30 mins.	15	158	173	10	13	23	136	11	147
+45 mins.	14	**168**	**182**	10	**17**	**27**	131	**12**	143
Total Volume	61	613	674	47	50	97	614	41	655
% App. Total	9.1	90.9		48.5	51.5		93.7	6.3	
PHF	.803	.912	.926	.734	.735	.898	.760	.854	.769

Counts Unlimited, Inc.
PO Box 1178
Corona, CA 92878
(951)268-6268

City of Ontario
N/S: Rental Car Road
E/W: Airport Drive
Weather: Clear

File Name : 06_ONT_RC_AP AM
Site Code : 00322818
Start Date : 9/20/2022
Page No : 1

Groups Printed- Large 2 Axle Vehicles

	Airport Drive Westbound			Rental Car Road Northbound			Airport Drive Eastbound			
Start Time	Left	Thru	App. Total	Left	Right	App. Total	Thru	Right	App. Total	Int. Total
07:00 AM	4	2	6	3	0	3	9	2	11	20
07:15 AM	0	3	3	3	0	3	6	0	6	12
07:30 AM	0	5	5	3	0	3	2	1	3	11
07:45 AM	0	3	3	3	0	3	3	0	3	9
Total	4	13	17	12	0	12	20	3	23	52
08:00 AM	2	4	6	3	0	3	7	1	8	17
08:15 AM	1	3	4	4	0	4	1	0	1	9
08:30 AM	0	2	2	1	1	2	2	0	2	6
08:45 AM	0	4	4	2	0	2	1	0	1	7
Total	3	13	16	10	1	11	11	1	12	39
Grand Total	7	26	33	22	1	23	31	4	35	91
Apprch %	21.2	78.8		95.7	4.3		88.6	11.4		
Total %	7.7	28.6	36.3	24.2	1.1	25.3	34.1	4.4	38.5	

	Airport Drive Westbound			Rental Car Road Northbound			Airport Drive Eastbound			
Start Time	Left	Thru	App. Total	Left	Right	App. Total	Thru	Right	App. Total	Int. Total
Peak Hour Analysis From 07:30 AM to 08:15 AM - Peak 1 of 1										
Peak Hour for Entire Intersection Begins at 07:30 AM										
07:30 AM	0	**5**	5	3	0	3	2	**1**	3	11
07:45 AM	0	3	3	3	0	3	3	0	3	9
08:00 AM	**2**	4	**6**	3	0	3	**7**	1	**8**	**17**
08:15 AM	1	3	4	**4**	0	**4**	1	0	1	9
Total Volume	3	15	18	13	0	13	13	2	15	46
% App. Total	16.7	83.3		100	0		86.7	13.3		
PHF	.375	.750	.750	.813	.000	.813	.464	.500	.469	.676

Counts Unlimited, Inc.
PO Box 1178
Corona, CA 92878
(951)268-6268

City of Ontario
N/S: Rental Car Road
E/W: Airport Drive
Weather: Clear

File Name : 06_ONT_RC_AP AM
Site Code : 00322818
Start Date : 9/20/2022
Page No : 2

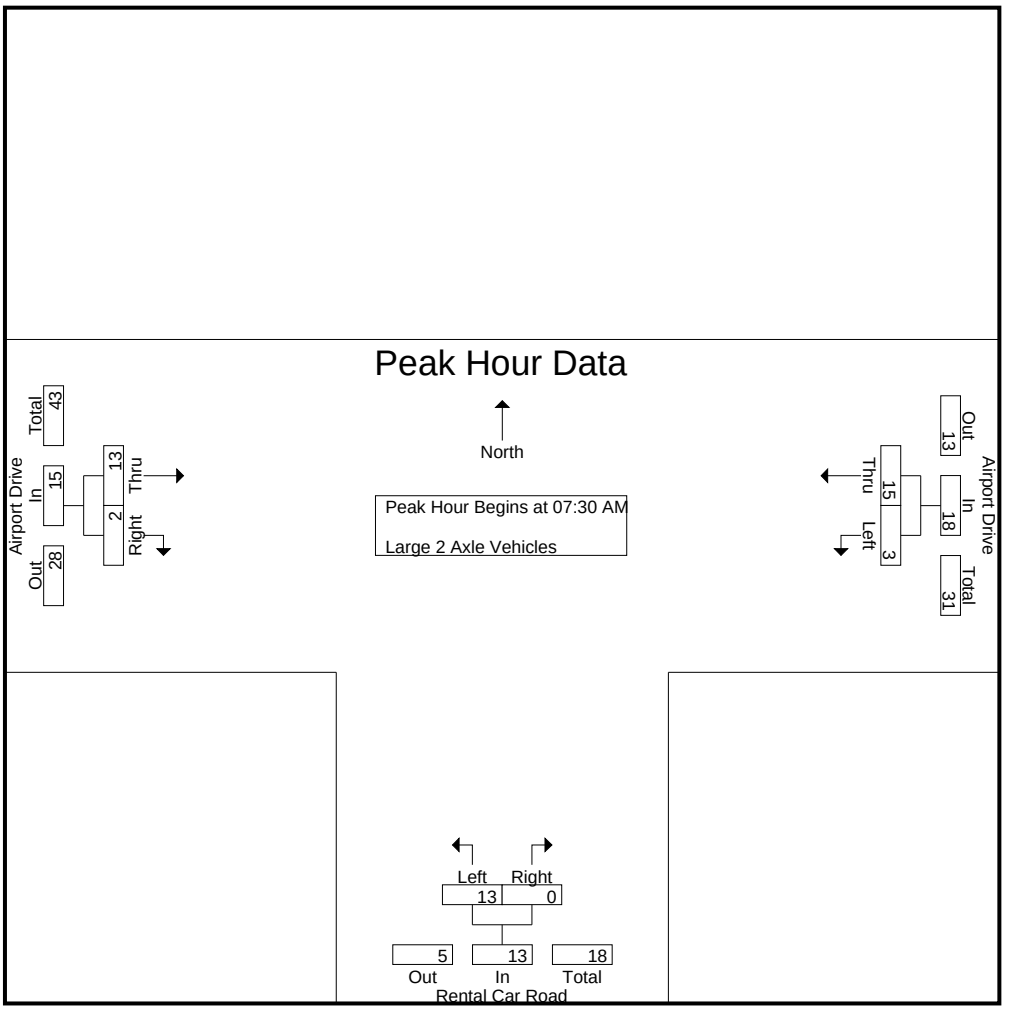

Peak Hour Analysis From 07:30 AM to 08:15 AM - Peak 1 of 1
Peak Hour for Each Approach Begins at:

	07:30 AM			07:30 AM			07:30 AM		
+0 mins.	0	**5**	5	3	0	3	2	**1**	3
+15 mins.	0	3	3	3	0	3	3	0	3
+30 mins.	**2**	4	**6**	3	0	3	**7**	1	**8**
+45 mins.	1	3	4	**4**	0	**4**	1	0	1
Total Volume	3	15	18	13	0	13	13	2	15
% App. Total	16.7	83.3		100	0		86.7	13.3	
PHF	.375	.750	.750	.813	.000	.813	.464	.500	.469

Counts Unlimited, Inc.
PO Box 1178
Corona, CA 92878
(951)268-6268

City of Ontario
N/S: Rental Car Road
E/W: Airport Drive
Weather: Clear

File Name : 06_ONT_RC_AP AM
Site Code : 00322818
Start Date : 9/20/2022
Page No : 1

Groups Printed- 3 Axle Vehicles

	Airport Drive Westbound			Rental Car Road Northbound			Airport Drive Eastbound			
Start Time	Left	Thru	App. Total	Left	Right	App. Total	Thru	Right	App. Total	Int. Total
07:00 AM	0	0	0	0	2	2	0	0	0	2
07:15 AM	1	1	2	0	0	0	1	0	1	3
07:30 AM	1	1	2	0	0	0	1	0	1	3
07:45 AM	0	0	0	0	2	2	1	0	1	3
Total	2	2	4	0	4	4	3	0	3	11
08:00 AM	0	1	1	0	0	0	1	0	1	2
08:15 AM	1	1	2	0	1	1	0	0	0	3
08:30 AM	0	1	1	0	0	0	2	0	2	3
08:45 AM	0	2	2	0	0	0	2	0	2	4
Total	1	5	6	0	1	1	5	0	5	12
Grand Total	3	7	10	0	5	5	8	0	8	23
Apprch %	30	70		0	100		100	0		
Total %	13	30.4	43.5	0	21.7	21.7	34.8	0	34.8	

	Airport Drive Westbound			Rental Car Road Northbound			Airport Drive Eastbound			
Start Time	Left	Thru	App. Total	Left	Right	App. Total	Thru	Right	App. Total	Int. Total
Peak Hour Analysis From 07:30 AM to 08:15 AM - Peak 1 of 1										
Peak Hour for Entire Intersection Begins at 07:30 AM										
07:30 AM	**1**	**1**	**2**	0	0	0	**1**	0	**1**	**3**
07:45 AM	0	0	0	0	**2**	**2**	1	0	1	3
08:00 AM	0	1	1	0	0	0	1	0	1	2
08:15 AM	1	1	2	0	1	1	0	0	0	3
Total Volume	2	3	5	0	3	3	3	0	3	11
% App. Total	40	60		0	100		100	0		
PHF	.500	.750	.625	.000	.375	.375	.750	.000	.750	.917

Counts Unlimited, Inc.
PO Box 1178
Corona, CA 92878
(951)268-6268

City of Ontario
N/S: Rental Car Road
E/W: Airport Drive
Weather: Clear

File Name : 06_ONT_RC_AP AM
Site Code : 00322818
Start Date : 9/20/2022
Page No : 2

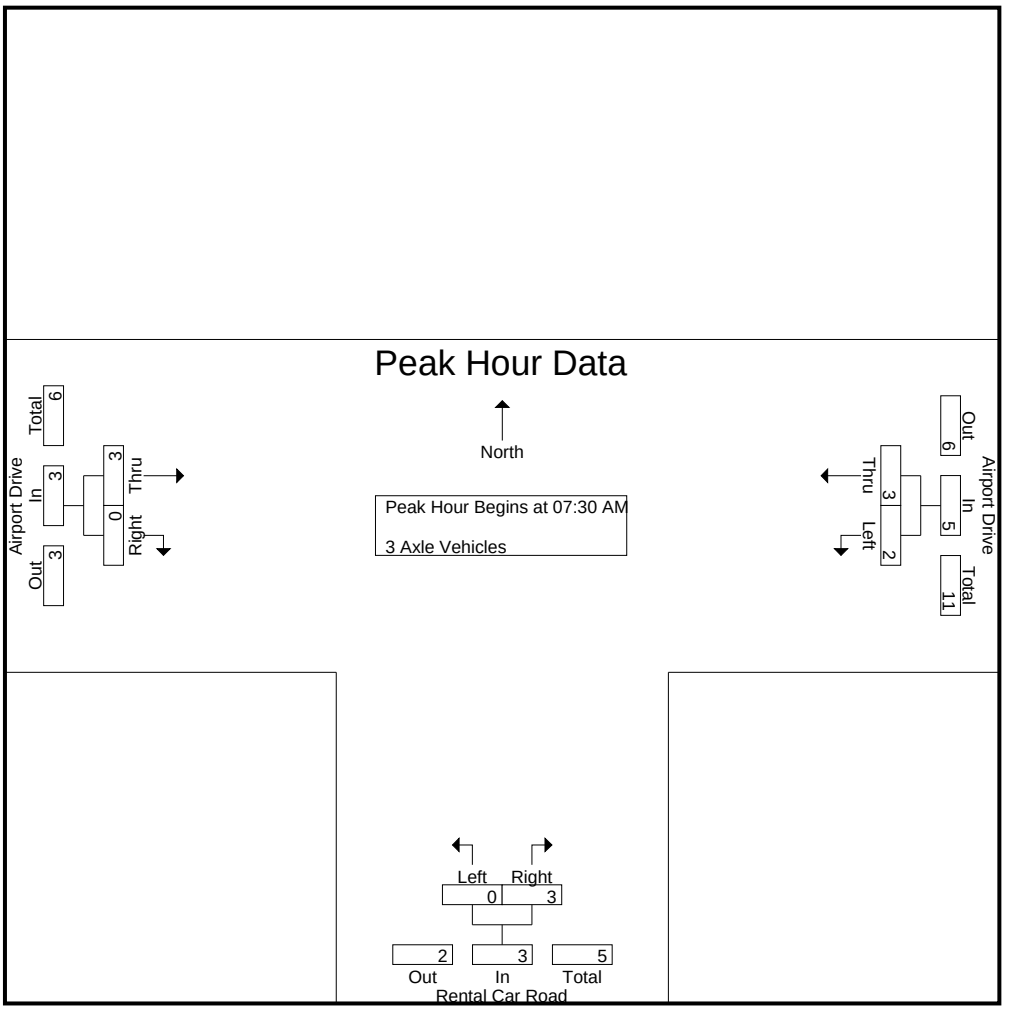

Peak Hour Analysis From 07:30 AM to 08:15 AM - Peak 1 of 1
Peak Hour for Each Approach Begins at:

	07:30 AM			07:30 AM			07:30 AM		
+0 mins.	**1**	**1**	**2**	0	0	0	**1**	0	**1**
+15 mins.	0	0	0	0	**2**	**2**	1	0	1
+30 mins.	0	1	1	0	0	0	1	0	1
+45 mins.	1	1	2	0	1	1	0	0	0
Total Volume	2	3	5	0	3	3	3	0	3
% App. Total	40	60		0	100		100	0	
PHF	.500	.750	.625	.000	.375	.375	.750	.000	.750

Counts Unlimited, Inc.
PO Box 1178
Corona, CA 92878
(951)268-6268

City of Ontario
N/S: Rental Car Road
E/W: Airport Drive
Weather: Clear

File Name : 06_ONT_RC_AP AM
Site Code : 00322818
Start Date : 9/20/2022
Page No : 1

Groups Printed- 4+ Axle Trucks

	Airport Drive Westbound			Rental Car Road Northbound			Airport Drive Eastbound			
Start Time	Left	Thru	App. Total	Left	Right	App. Total	Thru	Right	App. Total	Int. Total
07:00 AM	0	2	2	0	1	1	2	0	2	5
07:15 AM	1	1	2	0	0	0	1	0	1	3
07:30 AM	0	2	2	0	0	0	0	0	0	2
07:45 AM	0	6	6	0	0	0	1	0	1	7
Total	1	11	12	0	1	1	4	0	4	17
08:00 AM	0	8	8	0	0	0	2	0	2	10
08:15 AM	0	3	3	0	0	0	1	0	1	4
08:30 AM	1	3	4	0	0	0	3	0	3	7
08:45 AM	0	3	3	0	1	1	3	0	3	7
Total	1	17	18	0	1	1	9	0	9	28
Grand Total	2	28	30	0	2	2	13	0	13	45
Apprch %	6.7	93.3		0	100		100	0		
Total %	4.4	62.2	66.7	0	4.4	4.4	28.9	0	28.9	

	Airport Drive Westbound			Rental Car Road Northbound			Airport Drive Eastbound			
Start Time	Left	Thru	App. Total	Left	Right	App. Total	Thru	Right	App. Total	Int. Total
Peak Hour Analysis From 07:30 AM to 08:15 AM - Peak 1 of 1										
Peak Hour for Entire Intersection Begins at 07:30 AM										
07:30 AM	0	2	2	0	0	0	0	0	0	2
07:45 AM	0	6	6	0	0	0	1	0	1	7
08:00 AM	0	**8**	**8**	0	0	0	**2**	0	**2**	**10**
08:15 AM	0	3	3	0	0	0	1	0	1	4
Total Volume	0	19	19	0	0	0	4	0	4	23
% App. Total	0	100		0	0		100	0		
PHF	.000	.594	.594	.000	.000	.000	.500	.000	.500	.575

Counts Unlimited, Inc.
PO Box 1178
Corona, CA 92878
(951)268-6268

City of Ontario
N/S: Rental Car Road
E/W: Airport Drive
Weather: Clear

File Name : 06_ONT_RC_AP AM
Site Code : 00322818
Start Date : 9/20/2022
Page No : 2

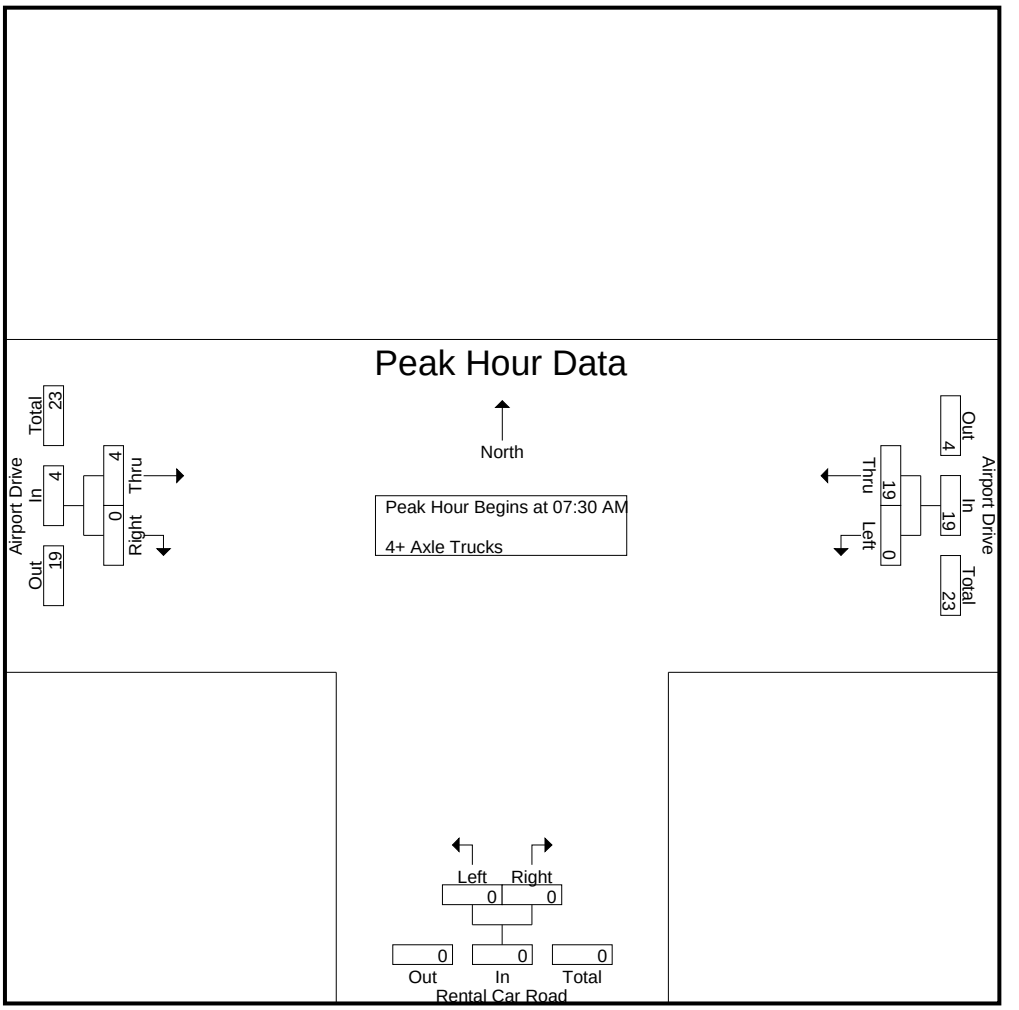

Peak Hour Analysis From 07:30 AM to 08:15 AM - Peak 1 of 1
Peak Hour for Each Approach Begins at:

	07:30 AM			07:30 AM			07:30 AM		
+0 mins.	0	2	2	0	0	0	0	0	0
+15 mins.	0	6	6	0	0	0	1	0	1
+30 mins.	0	**8**	**8**	0	0	0	**2**	0	**2**
+45 mins.	0	3	3	0	0	0	1	0	1
Total Volume	0	19	19	0	0	0	4	0	4
% App. Total	0	100		0	0		100	0	
PHF	.000	.594	.594	.000	.000	.000	.500	.000	.500

Counts Unlimited, Inc.
PO Box 1178
Corona, CA 92878
(951)268-6268

City of Ontario
N/S: Rental Car Road
E/W: Airport Drive
Weather: Clear

File Name : 06_ONT_RC_AP PM
Site Code : 00322818
Start Date : 9/20/2022
Page No : 1

Groups Printed- Passenger Vehicles - Large 2 Axle Vehicles - 3 Axle Vehicles - 4+ Axle Trucks

	Airport Drive Westbound			Rental Car Road Northbound			Airport Drive Eastbound			
Start Time	Left	Thru	App. Total	Left	Right	App. Total	Thru	Right	App. Total	Int. Total
04:00 PM	17	228	245	15	16	31	243	7	250	526
04:15 PM	15	205	220	18	12	30	294	4	298	548
04:30 PM	15	222	237	11	21	32	385	8	393	662
04:45 PM	10	197	207	15	12	27	291	6	297	531
Total	57	852	909	59	61	120	1213	25	1238	2267
05:00 PM	9	219	228	10	15	25	318	6	324	577
05:15 PM	10	184	194	8	13	21	267	5	272	487
05:30 PM	10	156	166	10	16	26	266	7	273	465
05:45 PM	13	118	131	10	12	22	262	9	271	424
Total	42	677	719	38	56	94	1113	27	1140	1953
Grand Total	99	1529	1628	97	117	214	2326	52	2378	4220
Apprch %	6.1	93.9		45.3	54.7		97.8	2.2		
Total %	2.3	36.2	38.6	2.3	2.8	5.1	55.1	1.2	56.4	
Passenger Vehicles	90	1475	1565	78	106	184	2180	48	2228	3977
% Passenger Vehicles	90.9	96.5	96.1	80.4	90.6	86	93.7	92.3	93.7	94.2
Large 2 Axle Vehicles	2	33	35	16	3	19	71	1	72	126
% Large 2 Axle Vehicles	2	2.2	2.1	16.5	2.6	8.9	3.1	1.9	3	3
3 Axle Vehicles	3	8	11	2	3	5	18	1	19	35
% 3 Axle Vehicles	3	0.5	0.7	2.1	2.6	2.3	0.8	1.9	0.8	0.8
4+ Axle Trucks	4	13	17	1	5	6	57	2	59	82
% 4+ Axle Trucks	4	0.9	1	1	4.3	2.8	2.5	3.8	2.5	1.9

	Airport Drive Westbound			Rental Car Road Northbound			Airport Drive Eastbound			
Start Time	Left	Thru	App. Total	Left	Right	App. Total	Thru	Right	App. Total	Int. Total
Peak Hour Analysis From 04:00 PM to 05:45 PM - Peak 1 of 1										
Peak Hour for Entire Intersection Begins at 04:15 PM										
04:15 PM	**15**	205	220	**18**	12	30	294	4	298	548
04:30 PM	15	**222**	**237**	11	**21**	**32**	**385**	**8**	**393**	**662**
04:45 PM	10	197	207	15	12	27	291	6	297	531
05:00 PM	9	219	228	10	15	25	318	6	324	577
Total Volume	49	843	892	54	60	114	1288	24	1312	2318
% App. Total	5.5	94.5		47.4	52.6		98.2	1.8		
PHF	.817	.949	.941	.750	.714	.891	.836	.750	.835	.875

Counts Unlimited, Inc.
PO Box 1178
Corona, CA 92878
(951)268-6268

City of Ontario
N/S: Rental Car Road
E/W: Airport Drive
Weather: Clear

File Name : 06_ONT_RC_AP PM
Site Code : 00322818
Start Date : 9/20/2022
Page No : 2

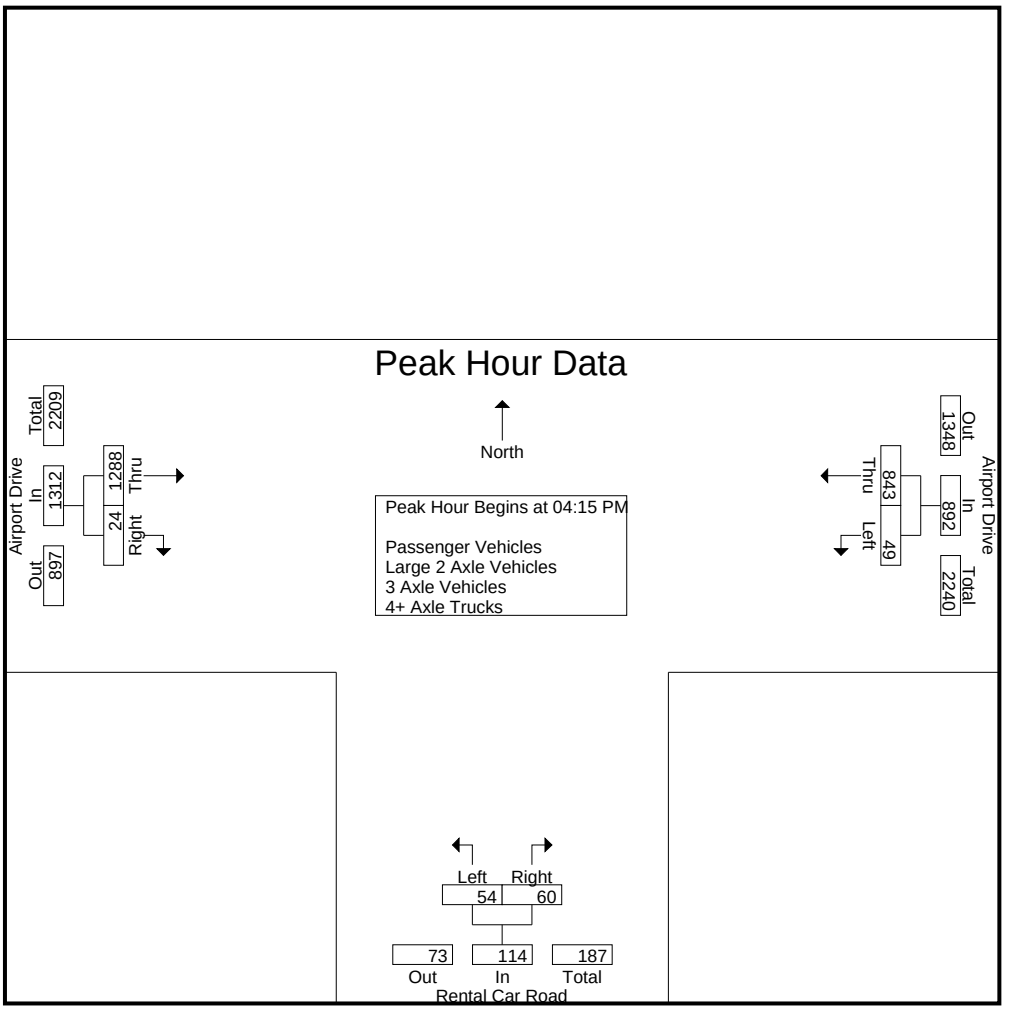

Peak Hour Analysis From 04:00 PM to 05:45 PM - Peak 1 of 1
Peak Hour for Each Approach Begins at:

	04:00 PM			04:00 PM			04:15 PM		
+0 mins.	**17**	**228**	**245**	15	16	31	294	4	298
+15 mins.	15	205	220	**18**	12	30	**385**	**8**	**393**
+30 mins.	15	222	237	11	**21**	**32**	291	6	297
+45 mins.	10	197	207	15	12	27	318	6	324
Total Volume	57	852	909	59	61	120	1288	24	1312
% App. Total	6.3	93.7		49.2	50.8		98.2	1.8	
PHF	.838	.934	.928	.819	.726	.938	.836	.750	.835

Counts Unlimited, Inc.
PO Box 1178
Corona, CA 92878
(951)268-6268

City of Ontario
N/S: Rental Car Road
E/W: Airport Drive
Weather: Clear

File Name : 06_ONT_RC_AP PM
Site Code : 00322818
Start Date : 9/20/2022
Page No : 1

Groups Printed- Passenger Vehicles

	Airport Drive Westbound			Rental Car Road Northbound			Airport Drive Eastbound			
Start Time	Left	Thru	App. Total	Left	Right	App. Total	Thru	Right	App. Total	Int. Total
04:00 PM	16	222	238	13	16	29	230	6	236	503
04:15 PM	12	196	208	18	10	28	274	4	278	514
04:30 PM	13	217	230	7	18	25	360	8	368	623
04:45 PM	10	190	200	10	10	20	267	4	271	491
Total	51	825	876	48	54	102	1131	22	1153	2131
05:00 PM	8	209	217	9	14	23	302	5	307	547
05:15 PM	9	178	187	6	12	18	254	5	259	464
05:30 PM	10	151	161	6	14	20	250	7	257	438
05:45 PM	12	112	124	9	12	21	243	9	252	397
Total	39	650	689	30	52	82	1049	26	1075	1846
Grand Total	90	1475	1565	78	106	184	2180	48	2228	3977
Apprch %	5.8	94.2		42.4	57.6		97.8	2.2		
Total %	2.3	37.1	39.4	2	2.7	4.6	54.8	1.2	56	

	Airport Drive Westbound			Rental Car Road Northbound			Airport Drive Eastbound			
Start Time	Left	Thru	App. Total	Left	Right	App. Total	Thru	Right	App. Total	Int. Total
Peak Hour Analysis From 04:15 PM to 05:00 PM - Peak 1 of 1										
Peak Hour for Entire Intersection Begins at 04:15 PM										
04:15 PM	12	196	208	**18**	10	**28**	274	4	278	514
04:30 PM	**13**	**217**	**230**	7	**18**	25	**360**	**8**	**368**	**623**
04:45 PM	10	190	200	10	10	20	267	4	271	491
05:00 PM	8	209	217	9	14	23	302	5	307	547
Total Volume	43	812	855	44	52	96	1203	21	1224	2175
% App. Total	5	95		45.8	54.2		98.3	1.7		
PHF	.827	.935	.929	.611	.722	.857	.835	.656	.832	.873

Counts Unlimited, Inc.
PO Box 1178
Corona, CA 92878
(951)268-6268

City of Ontario
N/S: Rental Car Road
E/W: Airport Drive
Weather: Clear

File Name : 06_ONT_RC_AP PM
Site Code : 00322818
Start Date : 9/20/2022
Page No : 2

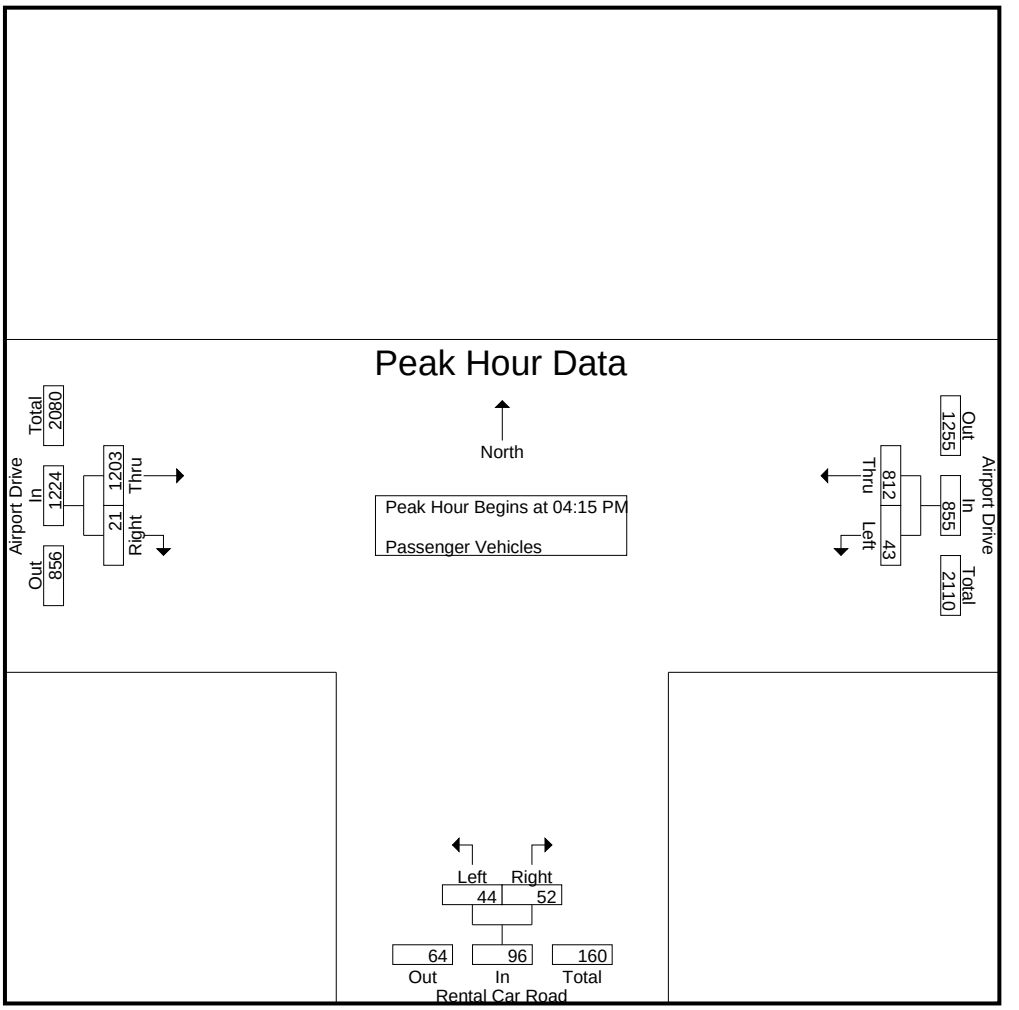

Peak Hour Analysis From 04:15 PM to 05:00 PM - Peak 1 of 1
Peak Hour for Each Approach Begins at:

	04:15 PM			04:15 PM			04:15 PM		
+0 mins.	12	196	208	**18**	10	**28**	274	4	278
+15 mins.	**13**	**217**	**230**	7	**18**	25	**360**	**8**	**368**
+30 mins.	10	190	200	10	10	20	267	4	271
+45 mins.	8	209	217	9	14	23	302	5	307
Total Volume	43	812	855	44	52	96	1203	21	1224
% App. Total	5	95		45.8	54.2		98.3	1.7	
PHF	.827	.935	.929	.611	.722	.857	.835	.656	.832

Counts Unlimited, Inc.
PO Box 1178
Corona, CA 92878
(951)268-6268

City of Ontario
N/S: Rental Car Road
E/W: Airport Drive
Weather: Clear

File Name : 06_ONT_RC_AP PM
Site Code : 00322818
Start Date : 9/20/2022
Page No : 1

Groups Printed- Large 2 Axle Vehicles

	Airport Drive Westbound			Rental Car Road Northbound			Airport Drive Eastbound			
Start Time	Left	Thru	App. Total	Left	Right	App. Total	Thru	Right	App. Total	Int. Total
04:00 PM	1	4	5	2	0	2	8	0	8	15
04:15 PM	1	5	6	0	0	0	9	0	9	15
04:30 PM	0	3	3	3	1	4	11	0	11	18
04:45 PM	0	2	2	4	2	6	9	1	10	18
Total	2	14	16	9	3	12	37	1	38	66
05:00 PM	0	6	6	1	0	1	4	0	4	11
05:15 PM	0	4	4	2	0	2	10	0	10	16
05:30 PM	0	4	4	3	0	3	7	0	7	14
05:45 PM	0	5	5	1	0	1	13	0	13	19
Total	0	19	19	7	0	7	34	0	34	60
Grand Total	2	33	35	16	3	19	71	1	72	126
Apprch %	5.7	94.3		84.2	15.8		98.6	1.4		
Total %	1.6	26.2	27.8	12.7	2.4	15.1	56.3	0.8	57.1	

	Airport Drive Westbound			Rental Car Road Northbound			Airport Drive Eastbound			
Start Time	Left	Thru	App. Total	Left	Right	App. Total	Thru	Right	App. Total	Int. Total
Peak Hour Analysis From 04:15 PM to 05:00 PM - Peak 1 of 1										
Peak Hour for Entire Intersection Begins at 04:15 PM										
04:15 PM	**1**	5	**6**	0	0	0	9	0	9	15
04:30 PM	0	3	3	3	1	4	**11**	0	**11**	**18**
04:45 PM	0	2	2	**4**	**2**	**6**	9	**1**	10	18
05:00 PM	0	**6**	6	1	0	1	4	0	4	11
Total Volume	1	16	17	8	3	11	33	1	34	62
% App. Total	5.9	94.1		72.7	27.3		97.1	2.9		
PHF	.250	.667	.708	.500	.375	.458	.750	.250	.773	.861

Counts Unlimited, Inc.
PO Box 1178
Corona, CA 92878
(951)268-6268

City of Ontario
N/S: Rental Car Road
E/W: Airport Drive
Weather: Clear

File Name : 06_ONT_RC_AP PM
Site Code : 00322818
Start Date : 9/20/2022
Page No : 2

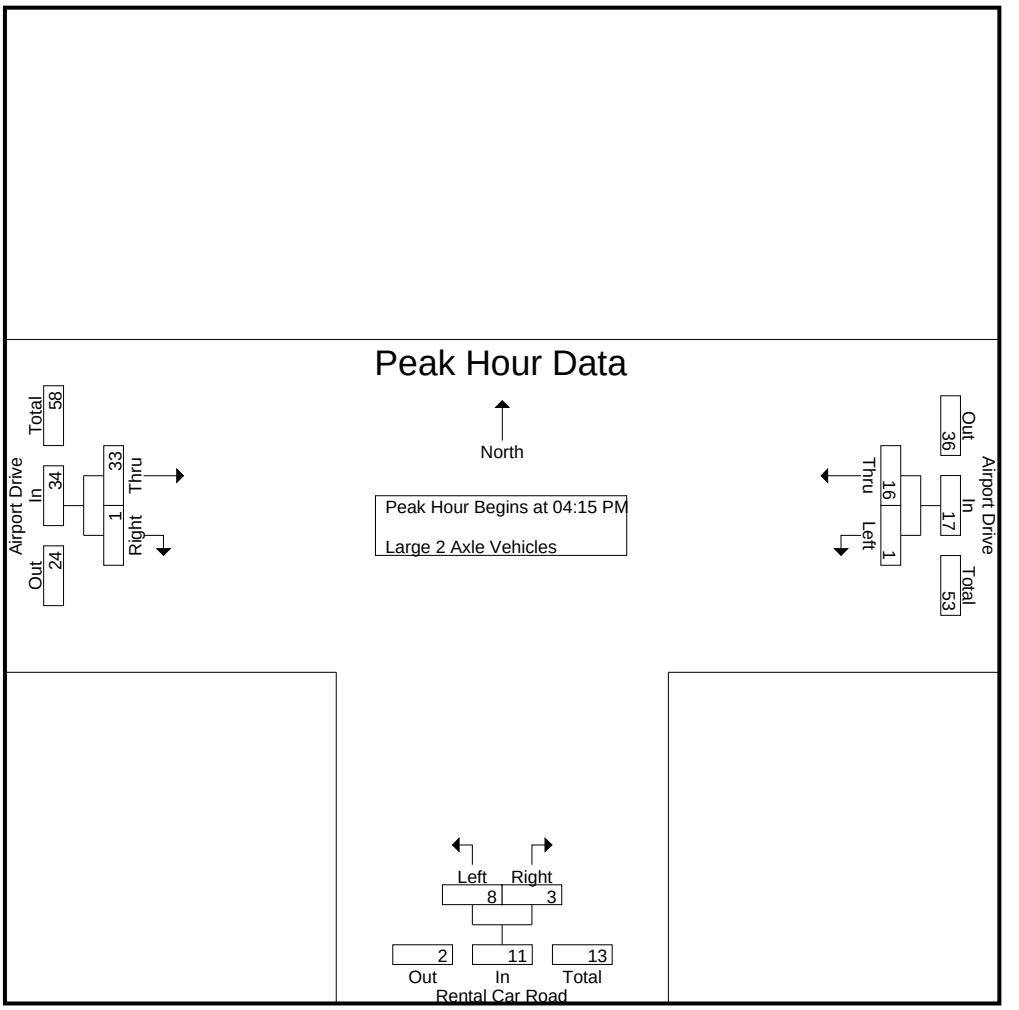

Peak Hour Analysis From 04:15 PM to 05:00 PM - Peak 1 of 1
Peak Hour for Each Approach Begins at:

	04:15 PM			04:15 PM			04:15 PM		
+0 mins.	**1**	5	**6**	0	0	0	9	0	9
+15 mins.	0	3	3	3	1	4	**11**	0	**11**
+30 mins.	0	2	2	**4**	**2**	**6**	9	**1**	10
+45 mins.	0	**6**	6	1	0	1	4	0	4
Total Volume	1	16	17	8	3	11	33	1	34
% App. Total	5.9	94.1		72.7	27.3		97.1	2.9	
PHF	.250	.667	.708	.500	.375	.458	.750	.250	.773

Counts Unlimited, Inc.
PO Box 1178
Corona, CA 92878
(951)268-6268

City of Ontario
N/S: Rental Car Road
E/W: Airport Drive
Weather: Clear

File Name : 06_ONT_RC_AP PM
Site Code : 00322818
Start Date : 9/20/2022
Page No : 1

Groups Printed- 3 Axle Vehicles

	Airport Drive Westbound			Rental Car Road Northbound			Airport Drive Eastbound			
Start Time	Left	Thru	App. Total	Left	Right	App. Total	Thru	Right	App. Total	Int. Total
04:00 PM	0	0	0	0	0	0	1	0	1	1
04:15 PM	0	3	3	0	0	0	2	0	2	5
04:30 PM	2	0	2	0	1	1	3	0	3	6
04:45 PM	0	1	1	1	0	1	3	0	3	5
Total	2	4	6	1	1	2	9	0	9	17
05:00 PM	1	2	3	0	1	1	5	1	6	10
05:15 PM	0	1	1	0	0	0	3	0	3	4
05:30 PM	0	0	0	1	1	2	0	0	0	2
05:45 PM	0	1	1	0	0	0	1	0	1	2
Total	1	4	5	1	2	3	9	1	10	18
Grand Total	3	8	11	2	3	5	18	1	19	35
Apprch %	27.3	72.7		40	60		94.7	5.3		
Total %	8.6	22.9	31.4	5.7	8.6	14.3	51.4	2.9	54.3	

	Airport Drive Westbound			Rental Car Road Northbound			Airport Drive Eastbound			
Start Time	Left	Thru	App. Total	Left	Right	App. Total	Thru	Right	App. Total	Int. Total
Peak Hour Analysis From 04:15 PM to 05:00 PM - Peak 1 of 1										
Peak Hour for Entire Intersection Begins at 04:15 PM										
04:15 PM	0	**3**	**3**	0	0	0	2	0	2	5
04:30 PM	**2**	0	2	0	**1**	**1**	3	0	3	6
04:45 PM	0	1	1	**1**	0	1	3	0	3	5
05:00 PM	1	2	3	0	1	1	**5**	**1**	**6**	**10**
Total Volume	3	6	9	1	2	3	13	1	14	26
% App. Total	33.3	66.7		33.3	66.7		92.9	7.1		
PHF	.375	.500	.750	.250	.500	.750	.650	.250	.583	.650

Counts Unlimited, Inc.
PO Box 1178
Corona, CA 92878
(951)268-6268

City of Ontario
N/S: Rental Car Road
E/W: Airport Drive
Weather: Clear

File Name : 06_ONT_RC_AP PM
Site Code : 00322818
Start Date : 9/20/2022
Page No : 2

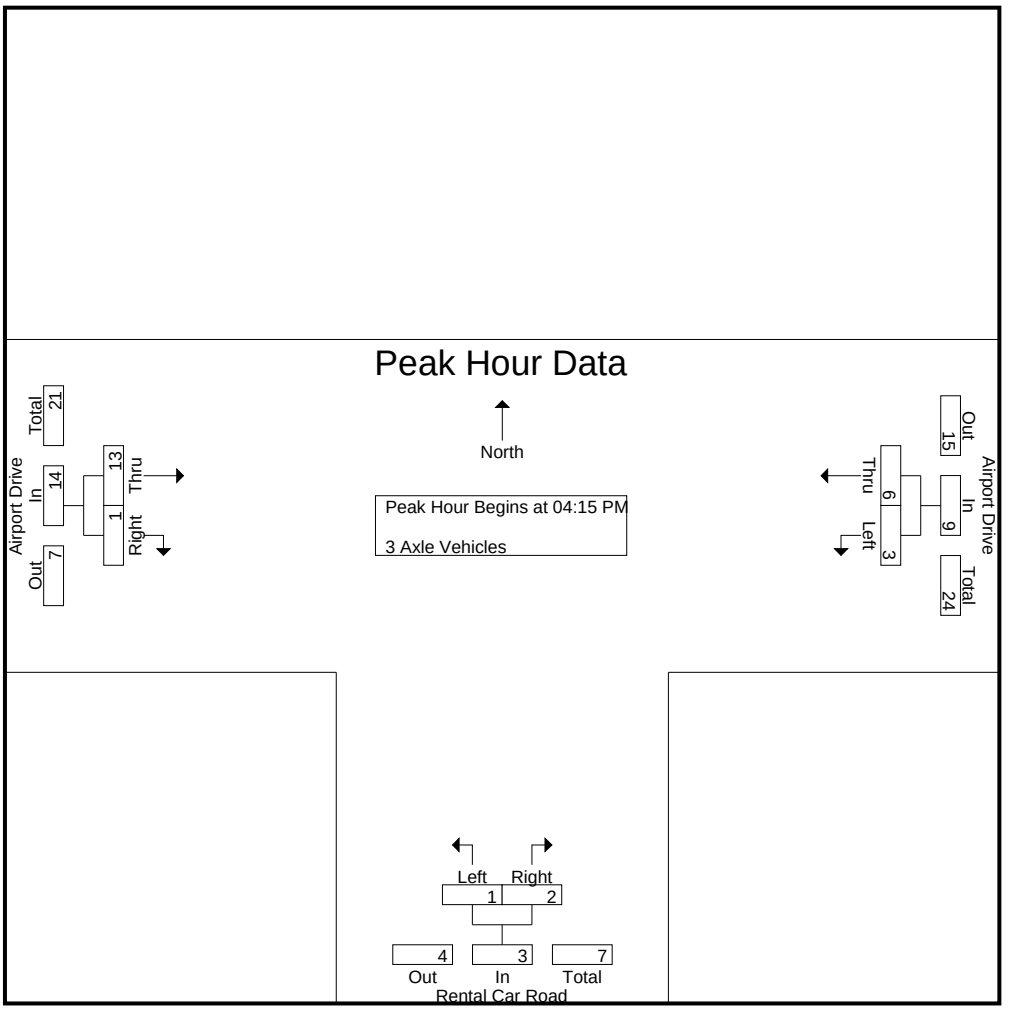

Peak Hour Analysis From 04:15 PM to 05:00 PM - Peak 1 of 1
Peak Hour for Each Approach Begins at:

	04:15 PM			04:15 PM			04:15 PM		
+0 mins.	0	**3**	**3**	0	0	0	2	0	2
+15 mins.	**2**	0	2	0	**1**	**1**	3	0	3
+30 mins.	0	1	1	**1**	0	1	3	0	3
+45 mins.	1	2	3	0	1	1	**5**	**1**	**6**
Total Volume	3	6	9	1	2	3	13	1	14
% App. Total	33.3	66.7		33.3	66.7		92.9	7.1	
PHF	.375	.500	.750	.250	.500	.750	.650	.250	.583

Counts Unlimited, Inc.
PO Box 1178
Corona, CA 92878
(951)268-6268

City of Ontario
N/S: Rental Car Road
E/W: Airport Drive
Weather: Clear

File Name : 06_ONT_RC_AP PM
Site Code : 00322818
Start Date : 9/20/2022
Page No : 1

Groups Printed- 4+ Axle Trucks

	Airport Drive Westbound			Rental Car Road Northbound			Airport Drive Eastbound			
Start Time	Left	Thru	App. Total	Left	Right	App. Total	Thru	Right	App. Total	Int. Total
04:00 PM	0	2	2	0	0	0	4	1	5	7
04:15 PM	2	1	3	0	2	2	9	0	9	14
04:30 PM	0	2	2	1	1	2	11	0	11	15
04:45 PM	0	4	4	0	0	0	12	1	13	17
Total	2	9	11	1	3	4	36	2	38	53
05:00 PM	0	2	2	0	0	0	7	0	7	9
05:15 PM	1	1	2	0	1	1	0	0	0	3
05:30 PM	0	1	1	0	1	1	9	0	9	11
05:45 PM	1	0	1	0	0	0	5	0	5	6
Total	2	4	6	0	2	2	21	0	21	29
Grand Total	4	13	17	1	5	6	57	2	59	82
Apprch %	23.5	76.5		16.7	83.3		96.6	3.4		
Total %	4.9	15.9	20.7	1.2	6.1	7.3	69.5	2.4	72	

	Airport Drive Westbound			Rental Car Road Northbound			Airport Drive Eastbound			
Start Time	Left	Thru	App. Total	Left	Right	App. Total	Thru	Right	App. Total	Int. Total
Peak Hour Analysis From 04:15 PM to 05:00 PM - Peak 1 of 1										
Peak Hour for Entire Intersection Begins at 04:15 PM										
04:15 PM	**2**	1	3	0	**2**	**2**	9	0	9	14
04:30 PM	0	2	2	**1**	1	2	11	0	11	15
04:45 PM	0	**4**	**4**	0	0	0	**12**	**1**	**13**	**17**
05:00 PM	0	2	2	0	0	0	7	0	7	9
Total Volume	2	9	11	1	3	4	39	1	40	55
% App. Total	18.2	81.8		25	75		97.5	2.5		
PHF	.250	.563	.688	.250	.375	.500	.813	.250	.769	.809

Counts Unlimited, Inc.
PO Box 1178
Corona, CA 92878
(951)268-6268

City of Ontario
N/S: Rental Car Road
E/W: Airport Drive
Weather: Clear

File Name : 06_ONT_RC_AP PM
Site Code : 00322818
Start Date : 9/20/2022
Page No : 2

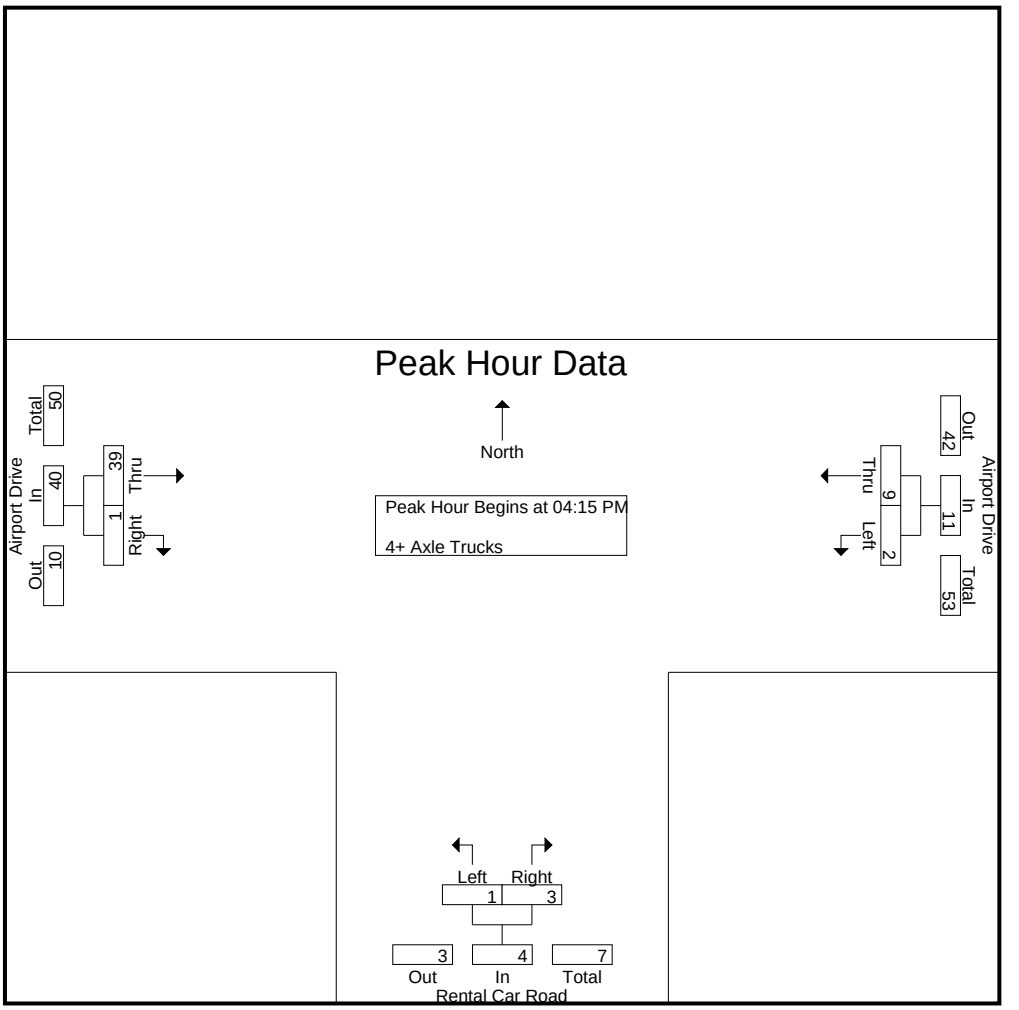

Peak Hour Analysis From 04:15 PM to 05:00 PM - Peak 1 of 1
Peak Hour for Each Approach Begins at:

	04:15 PM			04:15 PM			04:15 PM		
+0 mins.	**2**	1	3	0	**2**	**2**	9	0	9
+15 mins.	0	2	2	**1**	1	2	11	0	11
+30 mins.	0	**4**	**4**	0	0	0	**12**	**1**	**13**
+45 mins.	0	2	2	0	0	0	7	0	7
Total Volume	2	9	11	1	3	4	39	1	40
% App. Total	18.2	81.8		25	75		97.5	2.5	
PHF	.250	.563	.688	.250	.375	.500	.813	.250	.769

Location: Ontario
N/S: Rental Car Road
E/W: Airport Drive

Date: 9/20/2022
Day: Tuesday

PEDESTRIANS

	North Leg Dead End	East Leg Airport Drive	South Leg Rental Car Road	West Leg Airport Drive	
	Pedestrians	Pedestrians	Pedestrians	Pedestrians	
7:00 AM	0	0	0	0	0
7:15 AM	0	0	0	0	0
7:30 AM	0	0	0	0	0
7:45 AM	0	0	0	0	0
8:00 AM	0	0	0	0	0
8:15 AM	0	0	1	0	1
8:30 AM	0	0	1	0	1
8:45 AM	0	0	0	0	0
TOTAL VOLUMES:	0	0	2	0	2

	North Leg Dead End	East Leg Airport Drive	South Leg Rental Car Road	West Leg Airport Drive	
	Pedestrians	Pedestrians	Pedestrians	Pedestrians	
4:00 PM	0	0	0	0	0
4:15 PM	0	0	0	0	0
4:30 PM	0	0	0	0	0
4:45 PM	0	0	0	0	0
5:00 PM	0	0	0	0	0
5:15 PM	0	0	0	0	0
5:30 PM	0	0	0	0	0
5:45 PM	0	0	0	0	0
TOTAL VOLUMES:	0	0	0	0	0

Counts Unlimited, Inc.
PO Box 1178
Corona, CA 92878
951-268-6268

Location: Ontario
N/S: Rental Car Road
E/W: Airport Drive

Date: 9/20/2022
Day: Tuesday

BICYCLES

	Southbound Dead End			Westbound Airport Drive			Northbound Rental Car Road			Eastbound Airport Drive			
	Left	Thru	Right	Left	Thru	Right	Left	Thru	Right	Left	Thru	Right	
7:00 AM	0	0	0	0	0	0	0	0	0	0	2	0	2
7:15 AM	0	0	0	0	0	0	0	0	1	0	1	0	2
7:30 AM	0	0	0	0	0	0	0	0	0	0	0	0	0
7:45 AM	0	0	0	0	0	0	0	0	0	0	1	0	1
8:00 AM	0	0	0	1	0	0	0	0	0	0	2	0	3
8:15 AM	0	0	0	0	0	0	0	0	0	0	1	0	1
8:30 AM	0	0	0	0	0	0	0	0	0	0	3	0	3
8:45 AM	0	0	0	0	0	0	0	0	0	0	3	0	3
TOTAL VOLUMES:	0	0	0	1	0	0	0	0	1	0	13	0	15

	Southbound Dead End			Westbound Airport Drive			Northbound Rental Car Road			Eastbound Airport Drive			
	Left	Thru	Right	Left	Thru	Right	Left	Thru	Right	Left	Thru	Right	
4:00 PM	0	0	0	0	0	0	0	0	0	0	4	1	5
4:15 PM	0	0	0	0	0	0	0	0	0	0	9	0	9
4:30 PM	0	0	0	0	0	0	0	0	0	0	11	0	11
4:45 PM	0	0	0	0	0	0	0	0	0	0	12	1	13
5:00 PM	0	0	0	0	0	0	0	0	0	0	7	0	7
5:15 PM	0	0	0	0	0	0	0	0	0	0	0	0	0
5:30 PM	0	0	0	0	0	0	0	0	0	0	9	0	9
5:45 PM	0	0	0	0	0	0	0	0	0	0	5	0	5
TOTAL VOLUMES:	0	0	0	0	0	0	0	0	0	0	57	2	59

Counts Unlimited, Inc.
PO Box 1178
Corona, CA 92878
951-268-6268

Counts Unlimited, Inc.
PO Box 1178
Corona, CA 92878
(951)268-6268

City of Rancho Cucamonga
N/S: Milliken Avenue
E/W: Azusa Court
Weather: Clear

File Name : 07_RNC_Mil_Azu Ct AM
Site Code : 00322818
Start Date : 9/20/2022
Page No : 1

Groups Printed- Passenger Vehicles - Large 2 Axle Vehicles - 3 Axle Vehicles - 4+ Axle Trucks

	Milliken Avenue Southbound			Milliken Avenue Northbound			Azusa Court Eastbound			
Start Time	Thru	Right	App. Total	Left	Thru	App. Total	Left	Right	App. Total	Int. Total
07:00 AM	130	14	144	0	116	116	0	5	5	265
07:15 AM	147	6	153	0	128	128	0	1	1	282
07:30 AM	236	16	252	0	145	145	0	1	1	398
07:45 AM	246	24	270	0	208	208	0	2	2	480
Total	759	60	819	0	597	597	0	9	9	1425
08:00 AM	257	23	280	0	167	167	0	4	4	451
08:15 AM	276	7	283	0	189	189	0	4	4	476
08:30 AM	259	7	266	0	181	181	0	3	3	450
08:45 AM	210	18	228	0	189	189	0	4	4	421
Total	1002	55	1057	0	726	726	0	15	15	1798
Grand Total	1761	115	1876	0	1323	1323	0	24	24	3223
Apprch %	93.9	6.1		0	100		0	100		
Total %	54.6	3.6	58.2	0	41	41	0	0.7	0.7	
Passenger Vehicles	1643	113	1756	0	1221	1221	0	21	21	2998
% Passenger Vehicles	93.3	98.3	93.6	0	92.3	92.3	0	87.5	87.5	93
Large 2 Axle Vehicles	32	2	34	0	34	34	0	3	3	71
% Large 2 Axle Vehicles	1.8	1.7	1.8	0	2.6	2.6	0	12.5	12.5	2.2
3 Axle Vehicles	21	0	21	0	11	11	0	0	0	32
% 3 Axle Vehicles	1.2	0	1.1	0	0.8	0.8	0	0	0	1
4+ Axle Trucks	65	0	65	0	57	57	0	0	0	122
% 4+ Axle Trucks	3.7	0	3.5	0	4.3	4.3	0	0	0	3.8

	Milliken Avenue Southbound			Milliken Avenue Northbound			Azusa Court Eastbound			
Start Time	Thru	Right	App. Total	Left	Thru	App. Total	Left	Right	App. Total	Int. Total
Peak Hour Analysis From 07:00 AM to 08:45 AM - Peak 1 of 1										
Peak Hour for Entire Intersection Begins at 07:45 AM										
07:45 AM	246	**24**	270	0	**208**	**208**	0	2	2	**480**
08:00 AM	257	23	280	0	167	167	0	**4**	**4**	451
08:15 AM	**276**	7	**283**	0	189	189	0	4	4	476
08:30 AM	259	7	266	0	181	181	0	3	3	450
Total Volume	1038	61	1099	0	745	745	0	13	13	1857
% App. Total	94.4	5.6		0	100		0	100		
PHF	.940	.635	.971	.000	.895	.895	.000	.813	.813	.967

Counts Unlimited, Inc.
PO Box 1178
Corona, CA 92878
(951)268-6268

City of Rancho Cucamonga
N/S: Milliken Avenue
E/W: Azusa Court
Weather: Clear

File Name : 07_RNC_Mil_Azu Ct AM
Site Code : 00322818
Start Date : 9/20/2022
Page No : 2

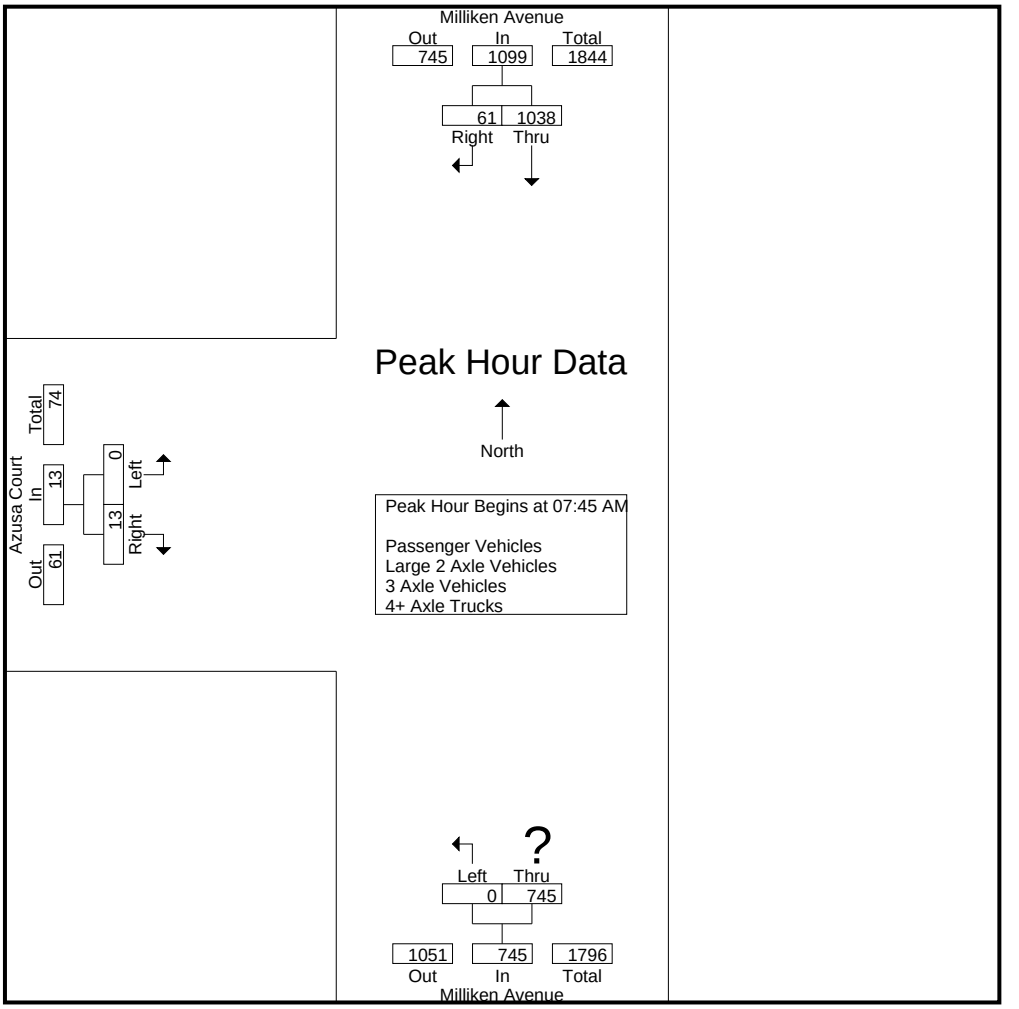

Peak Hour Analysis From 07:00 AM to 08:45 AM - Peak 1 of 1
Peak Hour for Each Approach Begins at:

	07:45 AM			07:45 AM			08:00 AM		
+0 mins.	246	**24**	270	0	**208**	**208**	0	**4**	**4**
+15 mins.	257	23	280	0	167	167	0	4	4
+30 mins.	**276**	7	**283**	0	189	189	0	3	3
+45 mins.	259	7	266	0	181	181	0	4	4
Total Volume	1038	61	1099	0	745	745	0	15	15
% App. Total	94.4	5.6		0	100		0	100	
PHF	.940	.635	.971	.000	.895	.895	.000	.938	.938

Counts Unlimited, Inc.
PO Box 1178
Corona, CA 92878
(951)268-6268

City of Rancho Cucamonga
N/S: Milliken Avenue
E/W: Azusa Court
Weather: Clear

File Name : 07_RNC_Mil_Azu Ct AM
Site Code : 00322818
Start Date : 9/20/2022
Page No : 1

Groups Printed- Passenger Vehicles

	Milliken Avenue Southbound			Milliken Avenue Northbound			Azusa Court Eastbound			
Start Time	Thru	Right	App. Total	Left	Thru	App. Total	Left	Right	App. Total	Int. Total
07:00 AM	118	14	132	0	105	105	0	4	4	241
07:15 AM	134	6	140	0	119	119	0	1	1	260
07:30 AM	215	15	230	0	135	135	0	0	0	365
07:45 AM	234	24	258	0	198	198	0	2	2	458
Total	701	59	760	0	557	557	0	7	7	1324
08:00 AM	244	23	267	0	156	156	0	4	4	427
08:15 AM	261	7	268	0	174	174	0	3	3	445
08:30 AM	240	6	246	0	164	164	0	3	3	413
08:45 AM	197	18	215	0	170	170	0	4	4	389
Total	942	54	996	0	664	664	0	14	14	1674
Grand Total	1643	113	1756	0	1221	1221	0	21	21	2998
Apprch %	93.6	6.4		0	100		0	100		
Total %	54.8	3.8	58.6	0	40.7	40.7	0	0.7	0.7	

	Milliken Avenue Southbound			Milliken Avenue Northbound			Azusa Court Eastbound			
Start Time	Thru	Right	App. Total	Left	Thru	App. Total	Left	Right	App. Total	Int. Total
Peak Hour Analysis From 07:45 AM to 08:30 AM - Peak 1 of 1										
Peak Hour for Entire Intersection Begins at 07:45 AM										
07:45 AM	234	**24**	258	0	**198**	**198**	0	2	2	**458**
08:00 AM	244	23	267	0	156	156	0	**4**	**4**	427
08:15 AM	**261**	7	**268**	0	174	174	0	3	3	445
08:30 AM	240	6	246	0	164	164	0	3	3	413
Total Volume	979	60	1039	0	692	692	0	12	12	1743
% App. Total	94.2	5.8		0	100		0	100		
PHF	.938	.625	.969	.000	.874	.874	.000	.750	.750	.951

Counts Unlimited, Inc.
PO Box 1178
Corona, CA 92878
(951)268-6268

City of Rancho Cucamonga
N/S: Milliken Avenue
E/W: Azusa Court
Weather: Clear

File Name : 07_RNC_Mil_Azu Ct AM
Site Code : 00322818
Start Date : 9/20/2022
Page No : 2

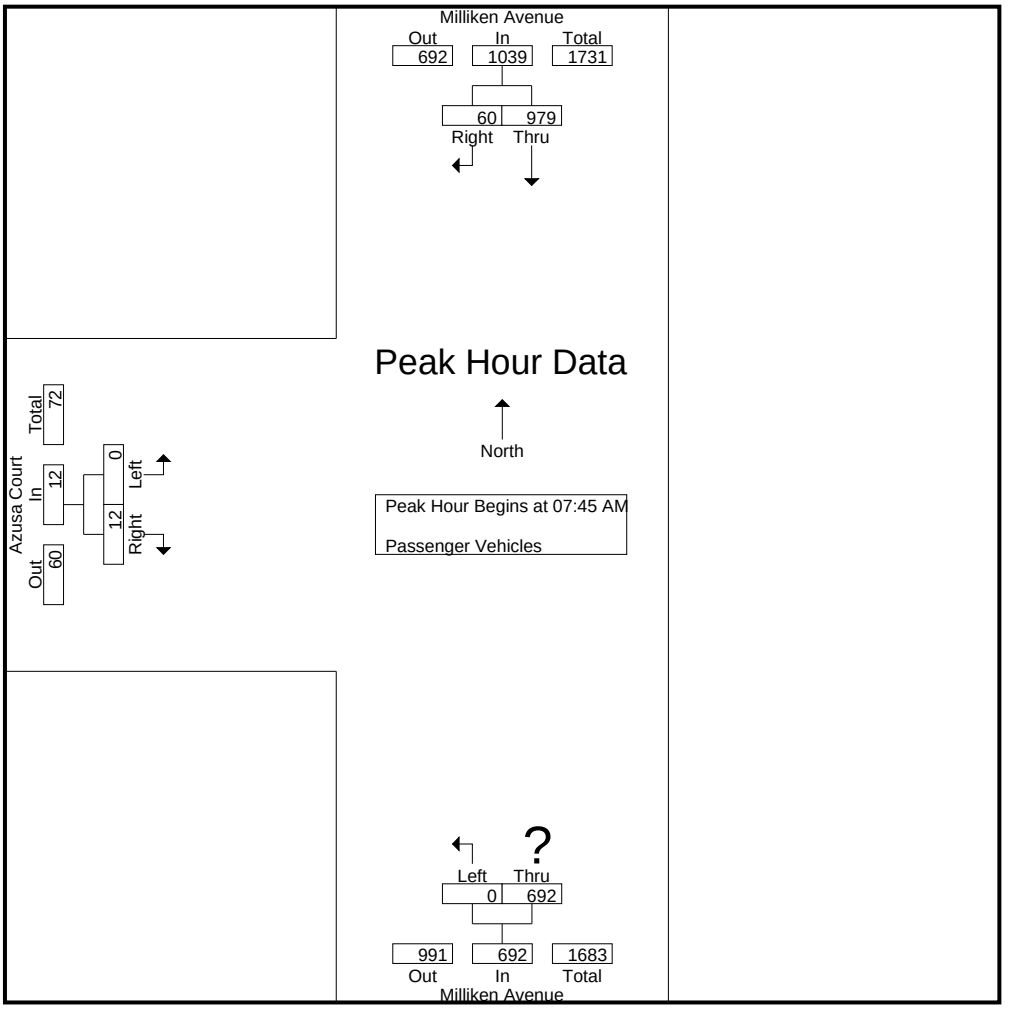

Peak Hour Analysis From 07:45 AM to 08:30 AM - Peak 1 of 1
Peak Hour for Each Approach Begins at:

	07:45 AM			07:45 AM			07:45 AM		
+0 mins.	234	**24**	258	0	**198**	**198**	0	2	2
+15 mins.	244	23	267	0	156	156	0	**4**	**4**
+30 mins.	**261**	7	**268**	0	174	174	0	3	3
+45 mins.	240	6	246	0	164	164	0	3	3
Total Volume	979	60	1039	0	692	692	0	12	12
% App. Total	94.2	5.8		0	100		0	100	
PHF	.938	.625	.969	.000	.874	.874	.000	.750	.750

Counts Unlimited, Inc.
PO Box 1178
Corona, CA 92878
(951)268-6268

City of Rancho Cucamonga
N/S: Milliken Avenue
E/W: Azusa Court
Weather: Clear

File Name : 07_RNC_Mil_Azu Ct AM
Site Code : 00322818
Start Date : 9/20/2022
Page No : 1

Groups Printed- Large 2 Axle Vehicles

	Milliken Avenue Southbound			Milliken Avenue Northbound			Azusa Court Eastbound			
Start Time	Thru	Right	App. Total	Left	Thru	App. Total	Left	Right	App. Total	Int. Total
07:00 AM	4	0	4	0	6	6	0	1	1	11
07:15 AM	5	0	5	0	2	2	0	0	0	7
07:30 AM	8	1	9	0	3	3	0	1	1	13
07:45 AM	2	0	2	0	4	4	0	0	0	6
Total	19	1	20	0	15	15	0	2	2	37
08:00 AM	3	0	3	0	4	4	0	0	0	7
08:15 AM	2	0	2	0	4	4	0	1	1	7
08:30 AM	6	1	7	0	7	7	0	0	0	14
08:45 AM	2	0	2	0	4	4	0	0	0	6
Total	13	1	14	0	19	19	0	1	1	34
Grand Total	32	2	34	0	34	34	0	3	3	71
Apprch %	94.1	5.9		0	100		0	100		
Total %	45.1	2.8	47.9	0	47.9	47.9	0	4.2	4.2	

	Milliken Avenue Southbound			Milliken Avenue Northbound			Azusa Court Eastbound			
Start Time	Thru	Right	App. Total	Left	Thru	App. Total	Left	Right	App. Total	Int. Total
Peak Hour Analysis From 07:45 AM to 08:30 AM - Peak 1 of 1										
Peak Hour for Entire Intersection Begins at 07:45 AM										
07:45 AM	2	0	2	0	4	4	0	0	0	6
08:00 AM	3	0	3	0	4	4	0	0	0	7
08:15 AM	2	0	2	0	4	4	0	**1**	**1**	7
08:30 AM	**6**	**1**	**7**	0	**7**	**7**	0	0	0	**14**
Total Volume	13	1	14	0	19	19	0	1	1	34
% App. Total	92.9	7.1		0	100		0	100		
PHF	.542	.250	.500	.000	.679	.679	.000	.250	.250	.607

Counts Unlimited, Inc.
PO Box 1178
Corona, CA 92878
(951)268-6268

City of Rancho Cucamonga
N/S: Milliken Avenue
E/W: Azusa Court
Weather: Clear

File Name : 07_RNC_Mil_Azu Ct AM
Site Code : 00322818
Start Date : 9/20/2022
Page No : 2

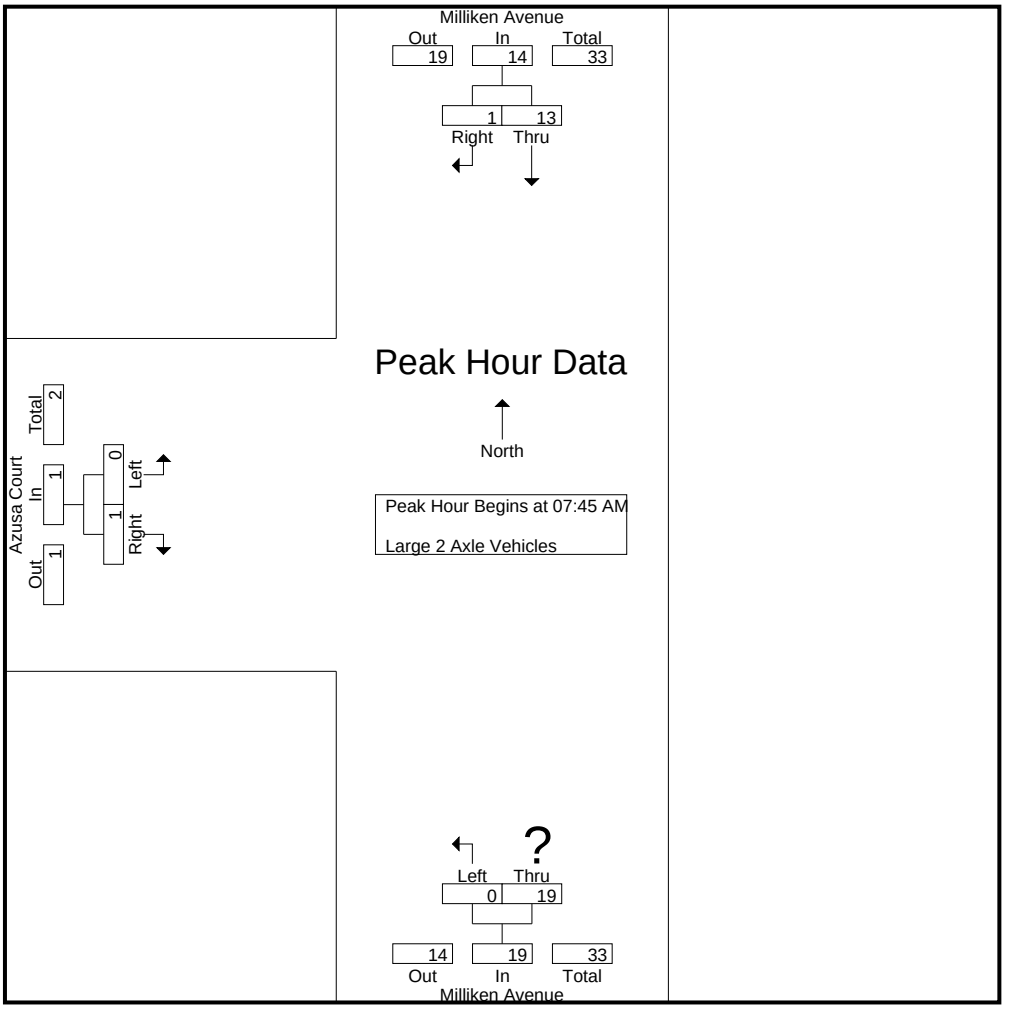

Peak Hour Analysis From 07:45 AM to 08:30 AM - Peak 1 of 1
Peak Hour for Each Approach Begins at:

	07:45 AM			07:45 AM			07:45 AM		
+0 mins.	2	0	2	0	4	4	0	0	0
+15 mins.	3	0	3	0	4	4	0	0	0
+30 mins.	2	0	2	0	4	4	0	**1**	**1**
+45 mins.	**6**	**1**	**7**	0	**7**	**7**	0	0	0
Total Volume	13	1	14	0	19	19	0	1	1
% App. Total	92.9	7.1		0	100		0	100	
PHF	.542	.250	.500	.000	.679	.679	.000	.250	.250

Counts Unlimited, Inc.
PO Box 1178
Corona, CA 92878
(951)268-6268

City of Rancho Cucamonga
N/S: Milliken Avenue
E/W: Azusa Court
Weather: Clear

File Name : 07_RNC_Mil_Azu Ct AM
Site Code : 00322818
Start Date : 9/20/2022
Page No : 1

Groups Printed- 3 Axle Vehicles

	Milliken Avenue Southbound			Milliken Avenue Northbound			Azusa Court Eastbound			
Start Time	Thru	Right	App. Total	Left	Thru	App. Total	Left	Right	App. Total	Int. Total
07:00 AM	1	0	1	0	1	1	0	0	0	2
07:15 AM	1	0	1	0	1	1	0	0	0	2
07:30 AM	4	0	4	0	1	1	0	0	0	5
07:45 AM	2	0	2	0	1	1	0	0	0	3
Total	8	0	8	0	4	4	0	0	0	12
08:00 AM	1	0	1	0	1	1	0	0	0	2
08:15 AM	4	0	4	0	4	4	0	0	0	8
08:30 AM	6	0	6	0	1	1	0	0	0	7
08:45 AM	2	0	2	0	1	1	0	0	0	3
Total	13	0	13	0	7	7	0	0	0	20
Grand Total	21	0	21	0	11	11	0	0	0	32
Apprch %	100	0		0	100		0	0		
Total %	65.6	0	65.6	0	34.4	34.4	0	0	0	

	Milliken Avenue Southbound			Milliken Avenue Northbound			Azusa Court Eastbound			
Start Time	Thru	Right	App. Total	Left	Thru	App. Total	Left	Right	App. Total	Int. Total
Peak Hour Analysis From 07:45 AM to 08:30 AM - Peak 1 of 1										
Peak Hour for Entire Intersection Begins at 07:45 AM										
07:45 AM	2	0	2	0	1	1	0	0	0	3
08:00 AM	1	0	1	0	1	1	0	0	0	2
08:15 AM	4	0	4	0	**4**	**4**	0	0	0	**8**
08:30 AM	**6**	0	**6**	0	1	1	0	0	0	7
Total Volume	13	0	13	0	7	7	0	0	0	20
% App. Total	100	0		0	100		0	0		
PHF	.542	.000	.542	.000	.438	.438	.000	.000	.000	.625

Counts Unlimited, Inc.
PO Box 1178
Corona, CA 92878
(951)268-6268

City of Rancho Cucamonga
N/S: Milliken Avenue
E/W: Azusa Court
Weather: Clear

File Name : 07_RNC_Mil_Azu Ct AM
Site Code : 00322818
Start Date : 9/20/2022
Page No : 2

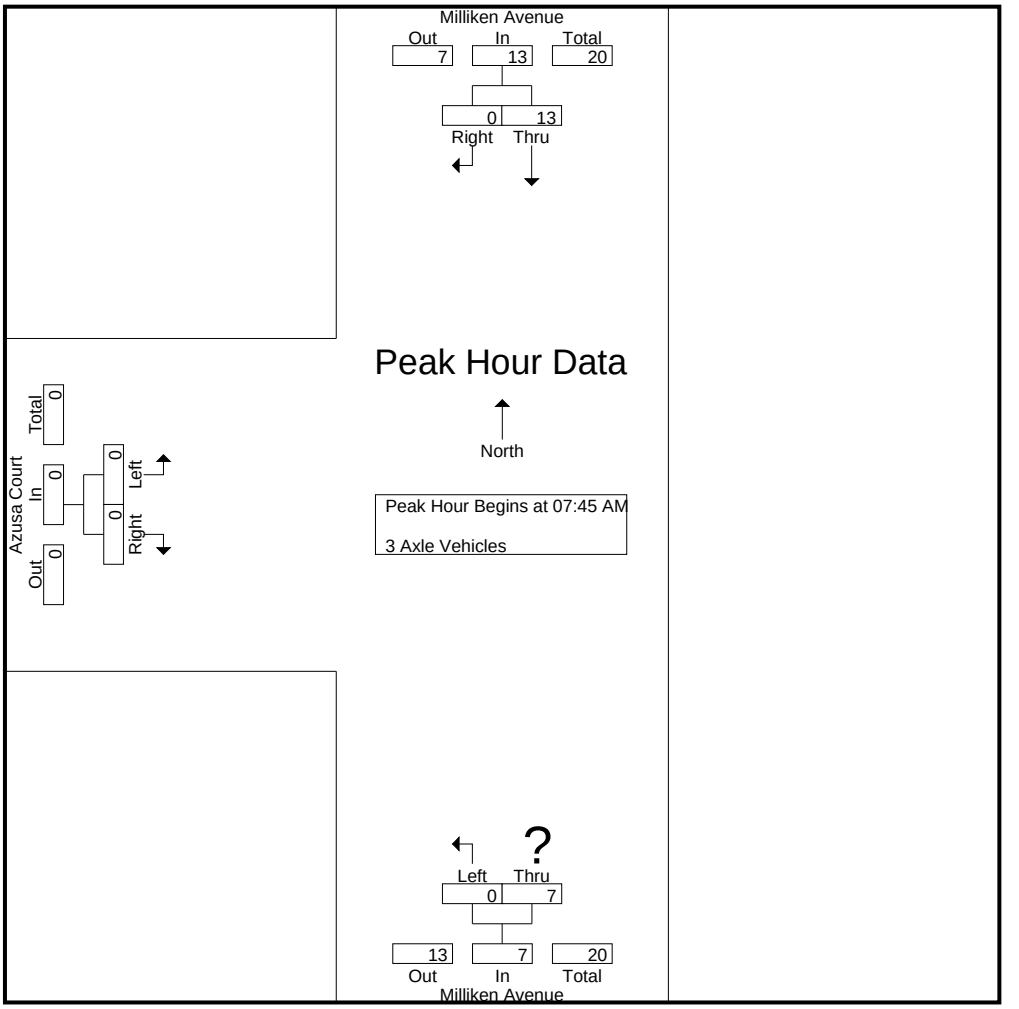

Peak Hour Analysis From 07:45 AM to 08:30 AM - Peak 1 of 1
Peak Hour for Each Approach Begins at:

	07:45 AM			07:45 AM			07:45 AM		
+0 mins.	2	0	2	0	1	1	0	0	0
+15 mins.	1	0	1	0	1	1	0	0	0
+30 mins.	4	0	4	0	**4**	**4**	0	0	0
+45 mins.	**6**	0	**6**	0	1	1	0	0	0
Total Volume	13	0	13	0	7	7	0	0	0
% App. Total	100	0		0	100		0	0	
PHF	.542	.000	.542	.000	.438	.438	.000	.000	.000

Counts Unlimited, Inc.
PO Box 1178
Corona, CA 92878
(951)268-6268

City of Rancho Cucamonga
N/S: Milliken Avenue
E/W: Azusa Court
Weather: Clear

File Name : 07_RNC_Mil_Azu Ct AM
Site Code : 00322818
Start Date : 9/20/2022
Page No : 1

Groups Printed- 4+ Axle Trucks

	Milliken Avenue Southbound			Milliken Avenue Northbound			Azusa Court Eastbound			
Start Time	Thru	Right	App. Total	Left	Thru	App. Total	Left	Right	App. Total	Int. Total
07:00 AM	7	0	7	0	4	4	0	0	0	11
07:15 AM	7	0	7	0	6	6	0	0	0	13
07:30 AM	9	0	9	0	6	6	0	0	0	15
07:45 AM	8	0	8	0	5	5	0	0	0	13
Total	31	0	31	0	21	21	0	0	0	52
08:00 AM	9	0	9	0	6	6	0	0	0	15
08:15 AM	9	0	9	0	7	7	0	0	0	16
08:30 AM	7	0	7	0	9	9	0	0	0	16
08:45 AM	9	0	9	0	14	14	0	0	0	23
Total	34	0	34	0	36	36	0	0	0	70
Grand Total	65	0	65	0	57	57	0	0	0	122
Apprch %	100	0		0	100		0	0		
Total %	53.3	0	53.3	0	46.7	46.7	0	0	0	

	Milliken Avenue Southbound			Milliken Avenue Northbound			Azusa Court Eastbound			
Start Time	Thru	Right	App. Total	Left	Thru	App. Total	Left	Right	App. Total	Int. Total
Peak Hour Analysis From 07:45 AM to 08:30 AM - Peak 1 of 1										
Peak Hour for Entire Intersection Begins at 07:45 AM										
07:45 AM	8	0	8	0	5	5	0	0	0	13
08:00 AM	**9**	0	**9**	0	6	6	0	0	0	15
08:15 AM	9	0	9	0	7	7	0	0	0	**16**
08:30 AM	7	0	7	0	**9**	**9**	0	0	0	16
Total Volume	33	0	33	0	27	27	0	0	0	60
% App. Total	100	0		0	100		0	0		
PHF	.917	.000	.917	.000	.750	.750	.000	.000	.000	.938

Counts Unlimited, Inc.
PO Box 1178
Corona, CA 92878
(951)268-6268

City of Rancho Cucamonga
N/S: Milliken Avenue
E/W: Azusa Court
Weather: Clear

File Name : 07_RNC_Mil_Azu Ct AM
Site Code : 00322818
Start Date : 9/20/2022
Page No : 2

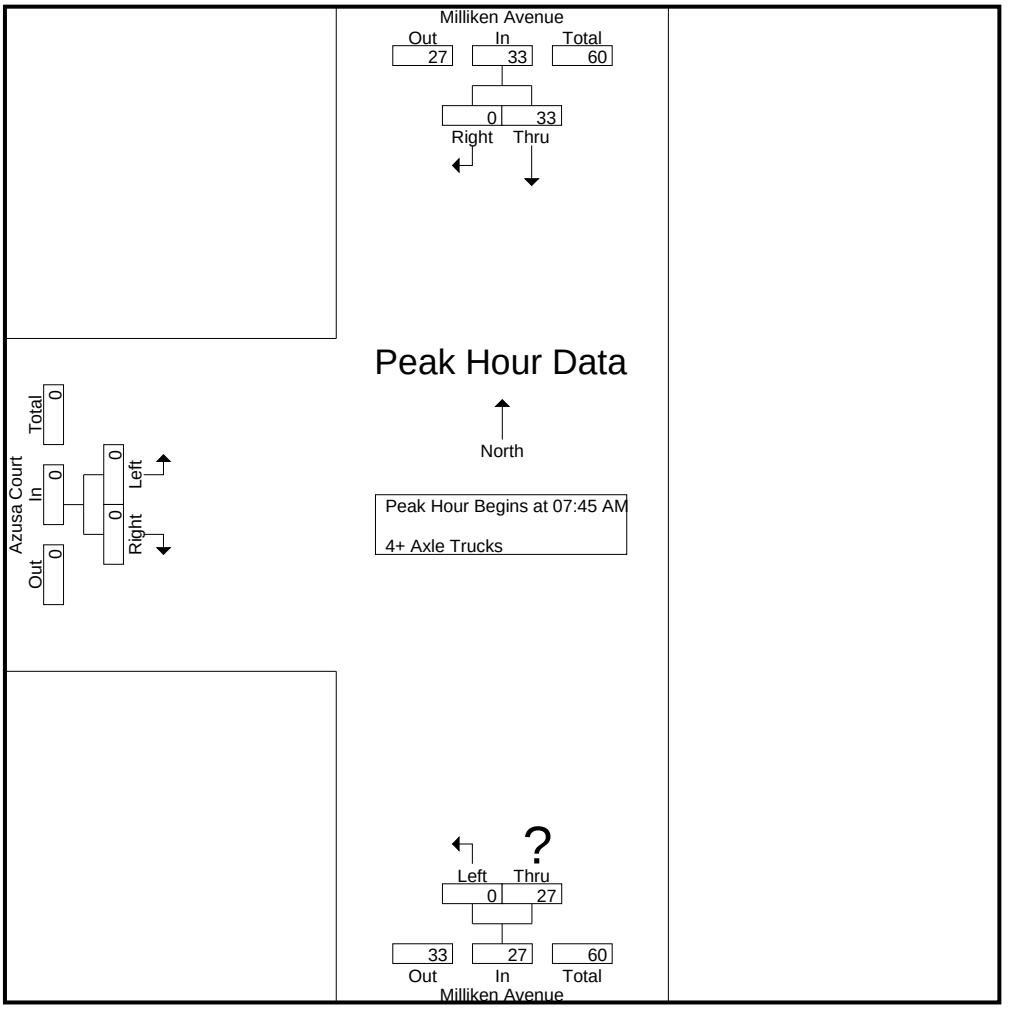

Peak Hour Analysis From 07:45 AM to 08:30 AM - Peak 1 of 1
Peak Hour for Each Approach Begins at:

	07:45 AM			07:45 AM			07:45 AM		
+0 mins.	8	0	8	0	5	5	0	0	0
+15 mins.	**9**	0	**9**	0	6	6	0	0	0
+30 mins.	9	0	9	0	7	7	0	0	0
+45 mins.	7	0	7	0	**9**	**9**	0	0	0
Total Volume	33	0	33	0	27	27	0	0	0
% App. Total	100	0		0	100		0	0	
PHF	.917	.000	.917	.000	.750	.750	.000	.000	.000

Counts Unlimited, Inc.
PO Box 1178
Corona, CA 92878
(951)268-6268

City of Rancho Cucamonga
N/S: Milliken Avenue
E/W: Azusa Court
Weather: Clear

File Name : 07_RNC_Mil_Azu Ct PM
Site Code : 00322818
Start Date : 9/20/2022
Page No : 1

Groups Printed- Passenger Vehicles - Large 2 Axle Vehicles - 3 Axle Vehicles - 4+ Axle Trucks

	Milliken Avenue Southbound			Milliken Avenue Northbound			Azusa Court Eastbound			
Start Time	Thru	Right	App. Total	Left	Thru	App. Total	Left	Right	App. Total	Int. Total
04:00 PM	210	6	216	0	414	414	0	9	9	639
04:15 PM	227	3	230	0	386	386	0	4	4	620
04:30 PM	228	5	233	0	405	405	0	1	1	639
04:45 PM	231	14	245	0	417	417	0	20	20	682
Total	896	28	924	0	1622	1622	0	34	34	2580
05:00 PM	241	7	248	0	478	478	0	9	9	735
05:15 PM	233	2	235	0	492	492	0	6	6	733
05:30 PM	201	4	205	0	438	438	0	1	1	644
05:45 PM	169	11	180	0	374	374	0	8	8	562
Total	844	24	868	0	1782	1782	0	24	24	2674
Grand Total	1740	52	1792	0	3404	3404	0	58	58	5254
Apprch %	97.1	2.9		0	100		0	100		
Total %	33.1	1	34.1	0	64.8	64.8	0	1.1	1.1	
Passenger Vehicles	1665	48	1713	0	3313	3313	0	55	55	5081
% Passenger Vehicles	95.7	92.3	95.6	0	97.3	97.3	0	94.8	94.8	96.7
Large 2 Axle Vehicles	24	4	28	0	25	25	0	2	2	55
% Large 2 Axle Vehicles	1.4	7.7	1.6	0	0.7	0.7	0	3.4	3.4	1
3 Axle Vehicles	4	0	4	0	20	20	0	0	0	24
% 3 Axle Vehicles	0.2	0	0.2	0	0.6	0.6	0	0	0	0.5
4+ Axle Trucks	47	0	47	0	46	46	0	1	1	94
% 4+ Axle Trucks	2.7	0	2.6	0	1.4	1.4	0	1.7	1.7	1.8

	Milliken Avenue Southbound			Milliken Avenue Northbound			Azusa Court Eastbound			
Start Time	Thru	Right	App. Total	Left	Thru	App. Total	Left	Right	App. Total	Int. Total
Peak Hour Analysis From 04:00 PM to 05:45 PM - Peak 1 of 1										
Peak Hour for Entire Intersection Begins at 04:45 PM										
04:45 PM	231	**14**	245	0	417	417	0	**20**	**20**	682
05:00 PM	**241**	7	**248**	0	478	478	0	9	9	**735**
05:15 PM	233	2	235	0	**492**	**492**	0	6	6	733
05:30 PM	201	4	205	0	438	438	0	1	1	644
Total Volume	906	27	933	0	1825	1825	0	36	36	2794
% App. Total	97.1	2.9		0	100		0	100		
PHF	.940	.482	.941	.000	.927	.927	.000	.450	.450	.950

Counts Unlimited, Inc.
PO Box 1178
Corona, CA 92878
(951)268-6268

City of Rancho Cucamonga
N/S: Milliken Avenue
E/W: Azusa Court
Weather: Clear

File Name : 07_RNC_Mil_Azu Ct PM
Site Code : 00322818
Start Date : 9/20/2022
Page No : 2

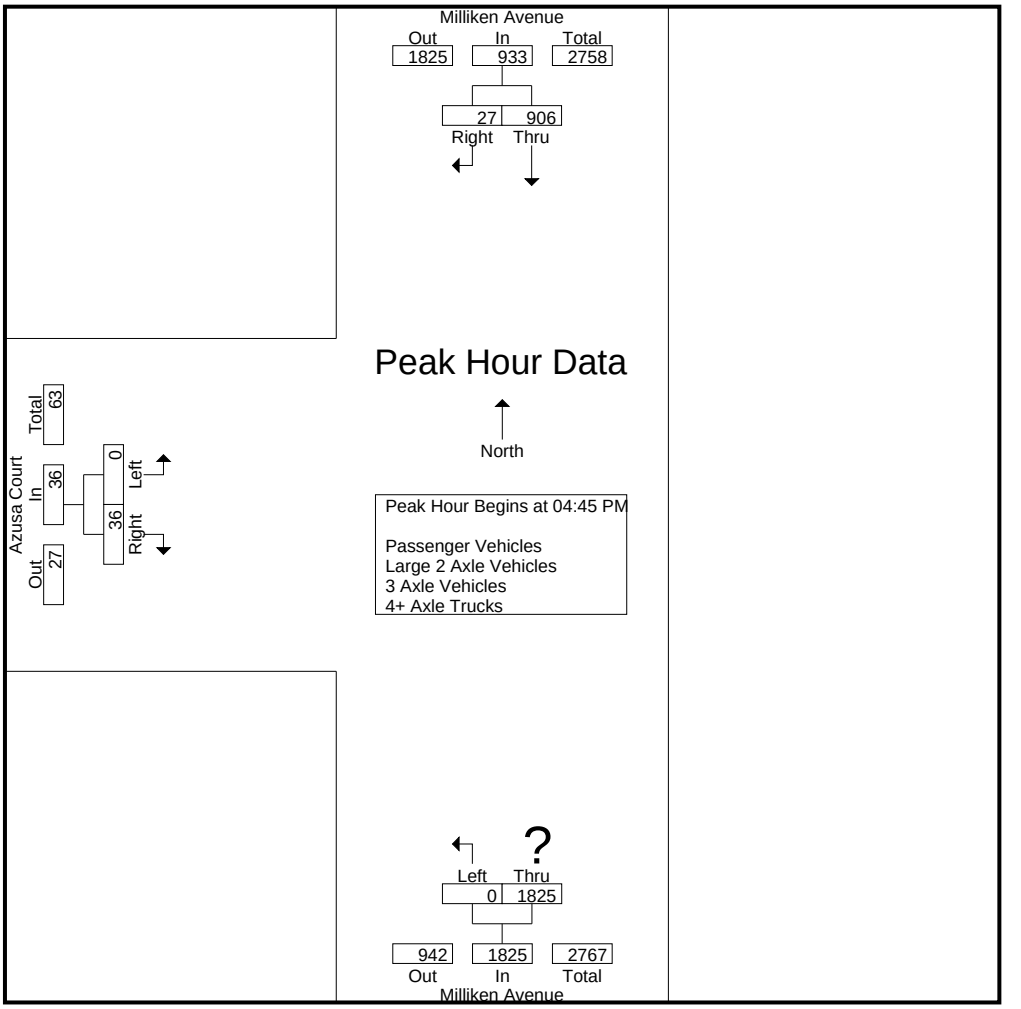

Peak Hour Analysis From 04:00 PM to 05:45 PM - Peak 1 of 1
Peak Hour for Each Approach Begins at:

	04:30 PM			04:45 PM			04:30 PM		
+0 mins.	228	5	233	0	417	417	0	1	1
+15 mins.	231	**14**	245	0	478	478	0	**20**	**20**
+30 mins.	**241**	7	**248**	0	**492**	**492**	0	9	9
+45 mins.	233	2	235	0	438	438	0	6	6
Total Volume	933	28	961	0	1825	1825	0	36	36
% App. Total	97.1	2.9		0	100		0	100	
PHF	.968	.500	.969	.000	.927	.927	.000	.450	.450

Counts Unlimited, Inc.
PO Box 1178
Corona, CA 92878
(951)268-6268

City of Rancho Cucamonga
N/S: Milliken Avenue
E/W: Azusa Court
Weather: Clear

File Name : 07_RNC_Mil_Azu Ct PM
Site Code : 00322818
Start Date : 9/20/2022
Page No : 1

Groups Printed- Passenger Vehicles

	Milliken Avenue Southbound			Milliken Avenue Northbound			Azusa Court Eastbound			
Start Time	Thru	Right	App. Total	Left	Thru	App. Total	Left	Right	App. Total	Int. Total
04:00 PM	196	5	201	0	401	401	0	8	8	610
04:15 PM	221	3	224	0	373	373	0	4	4	601
04:30 PM	218	5	223	0	387	387	0	1	1	611
04:45 PM	219	13	232	0	406	406	0	20	20	658
Total	854	26	880	0	1567	1567	0	33	33	2480
05:00 PM	227	6	233	0	467	467	0	9	9	709
05:15 PM	230	2	232	0	484	484	0	5	5	721
05:30 PM	189	4	193	0	431	431	0	0	0	624
05:45 PM	165	10	175	0	364	364	0	8	8	547
Total	811	22	833	0	1746	1746	0	22	22	2601
Grand Total	1665	48	1713	0	3313	3313	0	55	55	5081
Apprch %	97.2	2.8		0	100		0	100		
Total %	32.8	0.9	33.7	0	65.2	65.2	0	1.1	1.1	

	Milliken Avenue Southbound			Milliken Avenue Northbound			Azusa Court Eastbound			
Start Time	Thru	Right	App. Total	Left	Thru	App. Total	Left	Right	App. Total	Int. Total
Peak Hour Analysis From 04:45 PM to 05:30 PM - Peak 1 of 1										
Peak Hour for Entire Intersection Begins at 04:45 PM										
04:45 PM	219	**13**	232	0	406	406	0	**20**	**20**	658
05:00 PM	227	6	**233**	0	467	467	0	9	9	709
05:15 PM	**230**	2	232	0	**484**	**484**	0	5	5	**721**
05:30 PM	189	4	193	0	431	431	0	0	0	624
Total Volume	865	25	890	0	1788	1788	0	34	34	2712
% App. Total	97.2	2.8		0	100		0	100		
PHF	.940	.481	.955	.000	.924	.924	.000	.425	.425	.940

Counts Unlimited, Inc.
PO Box 1178
Corona, CA 92878
(951)268-6268

City of Rancho Cucamonga
N/S: Milliken Avenue
E/W: Azusa Court
Weather: Clear

File Name : 07_RNC_Mil_Azu Ct PM
Site Code : 00322818
Start Date : 9/20/2022
Page No : 2

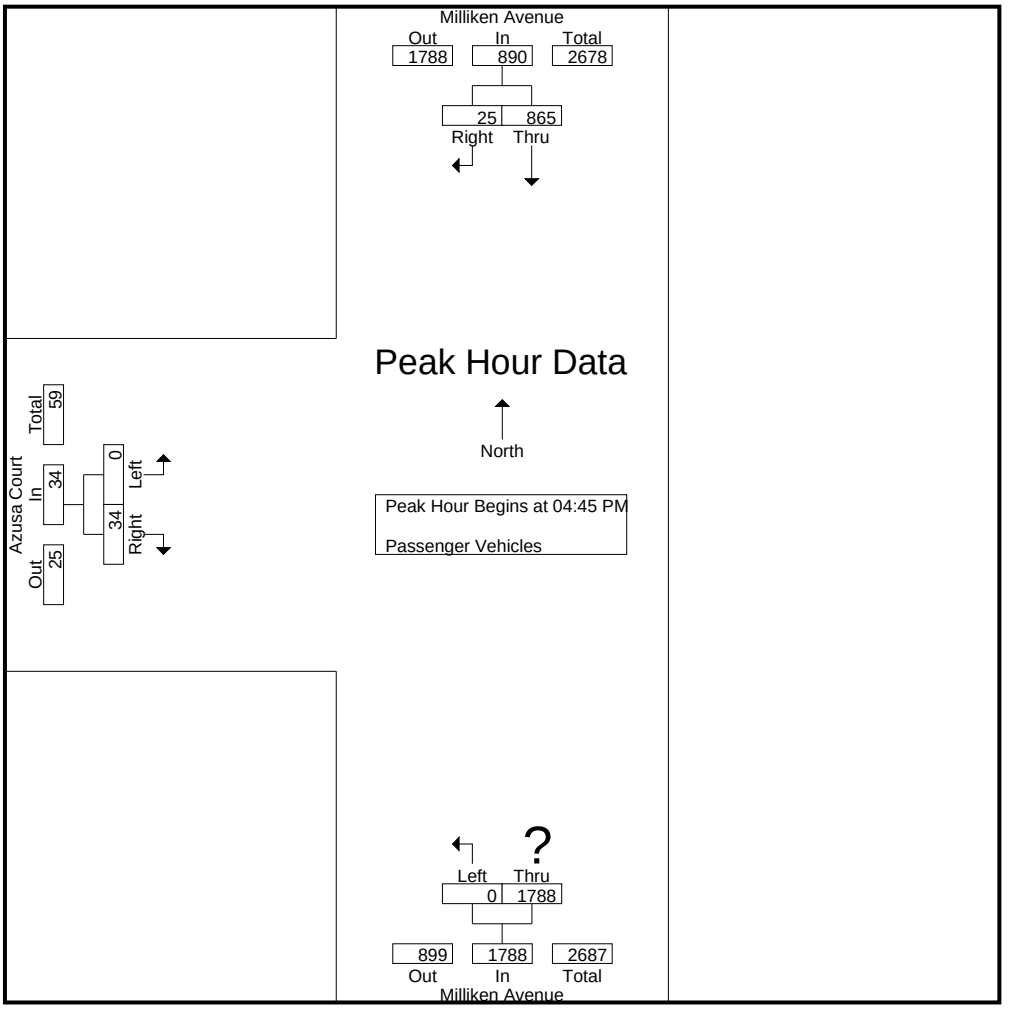

Peak Hour Analysis From 04:45 PM to 05:30 PM - Peak 1 of 1
Peak Hour for Each Approach Begins at:

	04:45 PM			04:45 PM			04:45 PM		
+0 mins.	219	**13**	232	0	406	406	0	**20**	**20**
+15 mins.	227	6	**233**	0	467	467	0	9	9
+30 mins.	**230**	2	232	0	**484**	**484**	0	5	5
+45 mins.	189	4	193	0	431	431	0	0	0
Total Volume	865	25	890	0	1788	1788	0	34	34
% App. Total	97.2	2.8		0	100		0	100	
PHF	.940	.481	.955	.000	.924	.924	.000	.425	.425

Counts Unlimited, Inc.
PO Box 1178
Corona, CA 92878
(951)268-6268

City of Rancho Cucamonga
N/S: Milliken Avenue
E/W: Azusa Court
Weather: Clear

File Name : 07_RNC_Mil_Azu Ct PM
Site Code : 00322818
Start Date : 9/20/2022
Page No : 1

Groups Printed- Large 2 Axle Vehicles

	Milliken Avenue Southbound			Milliken Avenue Northbound			Azusa Court Eastbound			
Start Time	Thru	Right	App. Total	Left	Thru	App. Total	Left	Right	App. Total	Int. Total
04:00 PM	2	1	3	0	1	1	0	1	1	5
04:15 PM	2	0	2	0	3	3	0	0	0	5
04:30 PM	5	0	5	0	6	6	0	0	0	11
04:45 PM	3	1	4	0	5	5	0	0	0	9
Total	12	2	14	0	15	15	0	1	1	30
05:00 PM	2	1	3	0	4	4	0	0	0	7
05:15 PM	1	0	1	0	4	4	0	1	1	6
05:30 PM	7	0	7	0	1	1	0	0	0	8
05:45 PM	2	1	3	0	1	1	0	0	0	4
Total	12	2	14	0	10	10	0	1	1	25
Grand Total	24	4	28	0	25	25	0	2	2	55
Apprch %	85.7	14.3		0	100		0	100		
Total %	43.6	7.3	50.9	0	45.5	45.5	0	3.6	3.6	

	Milliken Avenue Southbound			Milliken Avenue Northbound			Azusa Court Eastbound			
Start Time	Thru	Right	App. Total	Left	Thru	App. Total	Left	Right	App. Total	Int. Total
Peak Hour Analysis From 04:45 PM to 05:30 PM - Peak 1 of 1										
Peak Hour for Entire Intersection Begins at 04:45 PM										
04:45 PM	3	**1**	4	0	**5**	**5**	0	0	0	**9**
05:00 PM	2	1	3	0	4	4	0	0	0	7
05:15 PM	1	0	1	0	4	4	0	**1**	**1**	6
05:30 PM	**7**	0	**7**	0	1	1	0	0	0	8
Total Volume	13	2	15	0	14	14	0	1	1	30
% App. Total	86.7	13.3		0	100		0	100		
PHF	.464	.500	.536	.000	.700	.700	.000	.250	.250	.833

Counts Unlimited, Inc.
PO Box 1178
Corona, CA 92878
(951)268-6268

City of Rancho Cucamonga
N/S: Milliken Avenue
E/W: Azusa Court
Weather: Clear

File Name : 07_RNC_Mil_Azu Ct PM
Site Code : 00322818
Start Date : 9/20/2022
Page No : 2

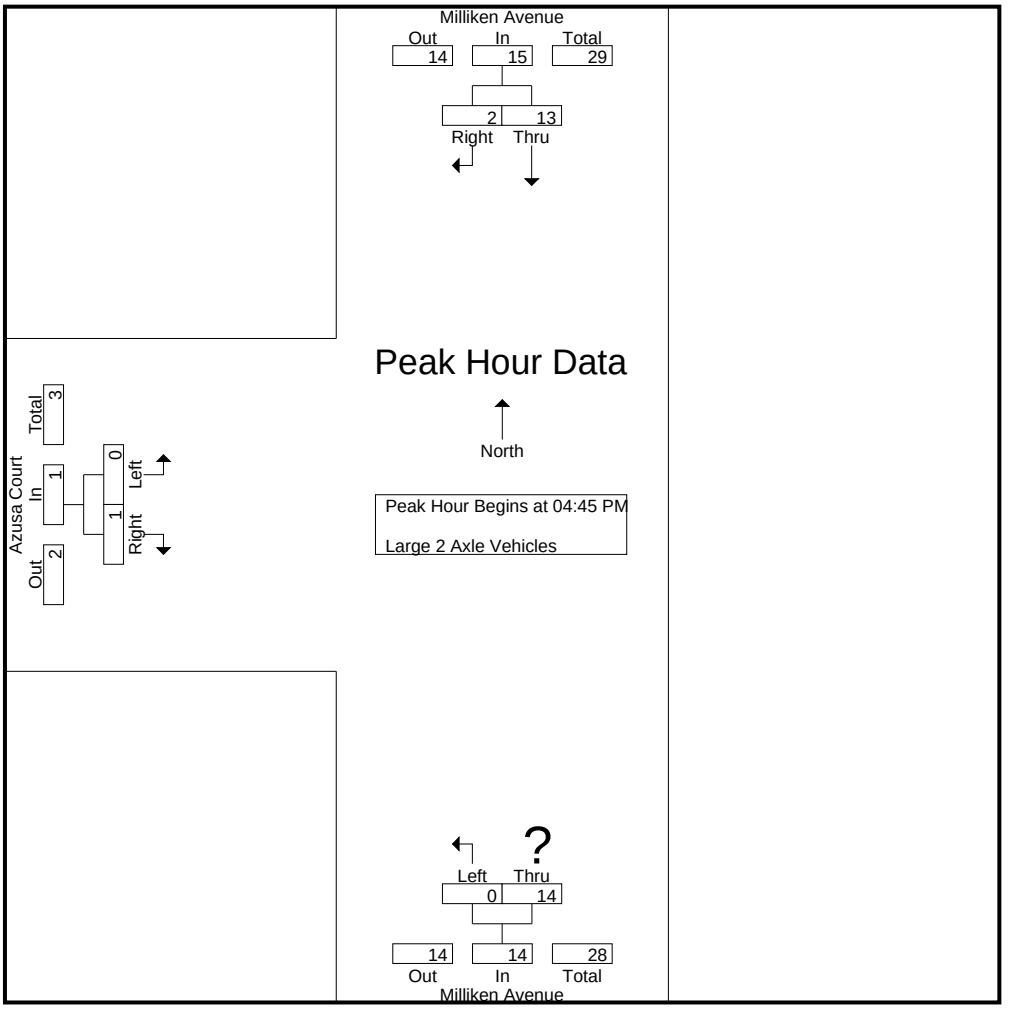

Peak Hour Analysis From 04:45 PM to 05:30 PM - Peak 1 of 1
Peak Hour for Each Approach Begins at:

	04:45 PM			04:45 PM			04:45 PM		
+0 mins.	3	**1**	4	0	**5**	**5**	0	0	0
+15 mins.	2	1	3	0	4	4	0	0	0
+30 mins.	1	0	1	0	4	4	0	**1**	**1**
+45 mins.	**7**	0	**7**	0	1	1	0	0	0
Total Volume	13	2	15	0	14	14	0	1	1
% App. Total	86.7	13.3		0	100		0	100	
PHF	.464	.500	.536	.000	.700	.700	.000	.250	.250

Counts Unlimited, Inc.
PO Box 1178
Corona, CA 92878
(951)268-6268

City of Rancho Cucamonga
N/S: Milliken Avenue
E/W: Azusa Court
Weather: Clear

File Name : 07_RNC_Mil_Azu Ct PM
Site Code : 00322818
Start Date : 9/20/2022
Page No : 1

Groups Printed- 3 Axle Vehicles

	Milliken Avenue Southbound			Milliken Avenue Northbound			Azusa Court Eastbound			
Start Time	Thru	Right	App. Total	Left	Thru	App. Total	Left	Right	App. Total	Int. Total
04:00 PM	1	0	1	0	4	4	0	0	0	5
04:15 PM	0	0	0	0	2	2	0	0	0	2
04:30 PM	0	0	0	0	3	3	0	0	0	3
04:45 PM	2	0	2	0	3	3	0	0	0	5
Total	3	0	3	0	12	12	0	0	0	15
05:00 PM	0	0	0	0	2	2	0	0	0	2
05:15 PM	0	0	0	0	2	2	0	0	0	2
05:30 PM	0	0	0	0	1	1	0	0	0	1
05:45 PM	1	0	1	0	3	3	0	0	0	4
Total	1	0	1	0	8	8	0	0	0	9
Grand Total	4	0	4	0	20	20	0	0	0	24
Apprch %	100	0		0	100		0	0		
Total %	16.7	0	16.7	0	83.3	83.3	0	0	0	

	Milliken Avenue Southbound			Milliken Avenue Northbound			Azusa Court Eastbound			
Start Time	Thru	Right	App. Total	Left	Thru	App. Total	Left	Right	App. Total	Int. Total
Peak Hour Analysis From 04:45 PM to 05:30 PM - Peak 1 of 1										
Peak Hour for Entire Intersection Begins at 04:45 PM										
04:45 PM	**2**	0	**2**	0	**3**	**3**	0	0	0	**5**
05:00 PM	0	0	0	0	2	2	0	0	0	2
05:15 PM	0	0	0	0	2	2	0	0	0	2
05:30 PM	0	0	0	0	1	1	0	0	0	1
Total Volume	2	0	2	0	8	8	0	0	0	10
% App. Total	100	0		0	100		0	0		
PHF	.250	.000	.250	.000	.667	.667	.000	.000	.000	.500

Counts Unlimited, Inc.
PO Box 1178
Corona, CA 92878
(951)268-6268

City of Rancho Cucamonga
N/S: Milliken Avenue
E/W: Azusa Court
Weather: Clear

File Name : 07_RNC_Mil_Azu Ct PM
Site Code : 00322818
Start Date : 9/20/2022
Page No : 2

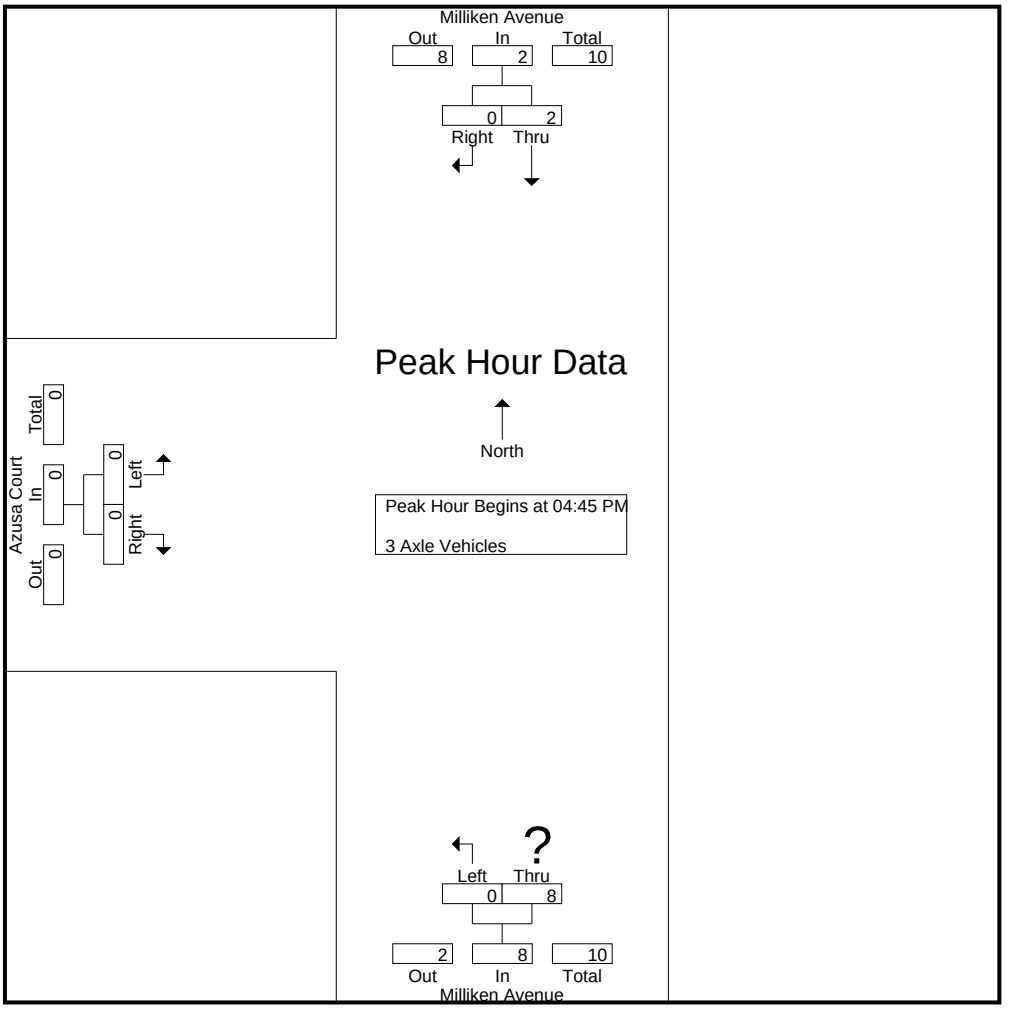

Peak Hour Analysis From 04:45 PM to 05:30 PM - Peak 1 of 1
Peak Hour for Each Approach Begins at:

	04:45 PM			04:45 PM			04:45 PM		
+0 mins.	**2**	0	**2**	0	**3**	**3**	0	0	0
+15 mins.	0	0	0	0	2	2	0	0	0
+30 mins.	0	0	0	0	2	2	0	0	0
+45 mins.	0	0	0	0	1	1	0	0	0
Total Volume	2	0	2	0	8	8	0	0	0
% App. Total	100	0		0	100		0	0	
PHF	.250	.000	.250	.000	.667	.667	.000	.000	.000

Counts Unlimited, Inc.
PO Box 1178
Corona, CA 92878
(951)268-6268

City of Rancho Cucamonga
N/S: Milliken Avenue
E/W: Azusa Court
Weather: Clear

File Name : 07_RNC_Mil_Azu Ct PM
Site Code : 00322818
Start Date : 9/20/2022
Page No : 1

Groups Printed- 4+ Axle Trucks

	Milliken Avenue Southbound			Milliken Avenue Northbound			Azusa Court Eastbound			
Start Time	Thru	Right	App. Total	Left	Thru	App. Total	Left	Right	App. Total	Int. Total
04:00 PM	11	0	11	0	8	8	0	0	0	19
04:15 PM	4	0	4	0	8	8	0	0	0	12
04:30 PM	5	0	5	0	9	9	0	0	0	14
04:45 PM	7	0	7	0	3	3	0	0	0	10
Total	27	0	27	0	28	28	0	0	0	55
05:00 PM	12	0	12	0	5	5	0	0	0	17
05:15 PM	2	0	2	0	2	2	0	0	0	4
05:30 PM	5	0	5	0	5	5	0	1	1	11
05:45 PM	1	0	1	0	6	6	0	0	0	7
Total	20	0	20	0	18	18	0	1	1	39
Grand Total	47	0	47	0	46	46	0	1	1	94
Apprch %	100	0		0	100		0	100		
Total %	50	0	50	0	48.9	48.9	0	1.1	1.1	

	Milliken Avenue Southbound			Milliken Avenue Northbound			Azusa Court Eastbound			
Start Time	Thru	Right	App. Total	Left	Thru	App. Total	Left	Right	App. Total	Int. Total
Peak Hour Analysis From 04:45 PM to 05:30 PM - Peak 1 of 1										
Peak Hour for Entire Intersection Begins at 04:45 PM										
04:45 PM	7	0	7	0	3	3	0	0	0	10
05:00 PM	**12**	0	**12**	0	**5**	**5**	0	0	0	**17**
05:15 PM	2	0	2	0	2	2	0	0	0	4
05:30 PM	5	0	5	0	5	5	0	**1**	**1**	11
Total Volume	26	0	26	0	15	15	0	1	1	42
% App. Total	100	0		0	100		0	100		
PHF	.542	.000	.542	.000	.750	.750	.000	.250	.250	.618

Counts Unlimited, Inc.
PO Box 1178
Corona, CA 92878
(951)268-6268

City of Rancho Cucamonga
N/S: Milliken Avenue
E/W: Azusa Court
Weather: Clear

File Name : 07_RNC_Mil_Azu Ct PM
Site Code : 00322818
Start Date : 9/20/2022
Page No : 2

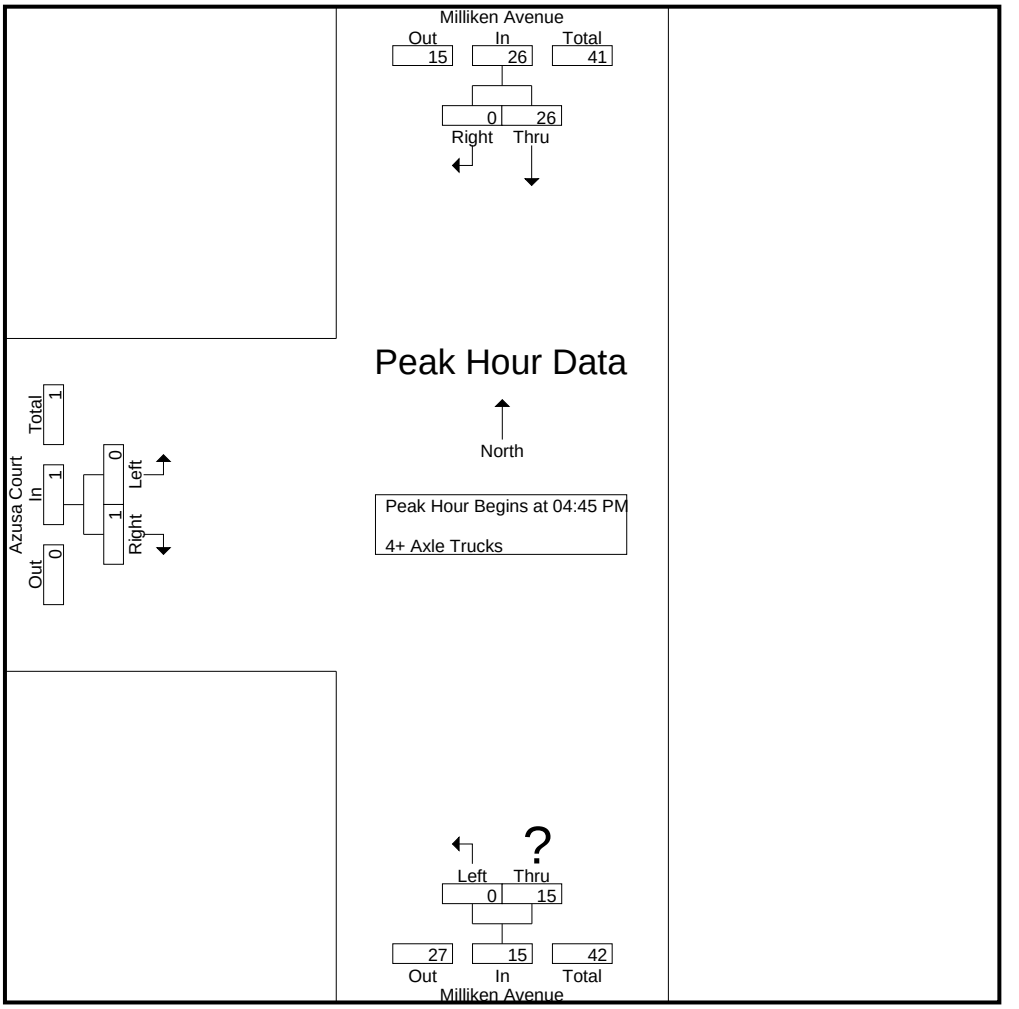

Peak Hour Analysis From 04:45 PM to 05:30 PM - Peak 1 of 1
Peak Hour for Each Approach Begins at:

	04:45 PM			04:45 PM			04:45 PM		
+0 mins.	7	0	7	0	3	3	0	0	0
+15 mins.	**12**	0	**12**	0	**5**	**5**	0	0	0
+30 mins.	2	0	2	0	2	2	0	0	0
+45 mins.	5	0	5	0	5	5	0	**1**	**1**
Total Volume	26	0	26	0	15	15	0	1	1
% App. Total	100	0		0	100		0	100	
PHF	.542	.000	.542	.000	.750	.750	.000	.250	.250

Location: Rancho Cucamonga
N/S: Milliken Avenue
E/W: Azusa Court

Date: 9/20/2022
Day: Tuesday

PEDESTRIANS

	North Leg Milliken Avenue	East Leg Dead End	South Leg Milliken Avenue	West Leg Azusa Court	
	Pedestrians	Pedestrians	Pedestrians	Pedestrians	
7:00 AM	0	0	0	0	0
7:15 AM	0	0	0	0	0
7:30 AM	0	0	0	0	0
7:45 AM	0	0	0	0	0
8:00 AM	0	0	0	0	0
8:15 AM	0	0	0	0	0
8:30 AM	0	0	0	0	0
8:45 AM	0	0	0	0	0
TOTAL VOLUMES:	0	0	0	0	0

	North Leg Milliken Avenue	East Leg Dead End	South Leg Milliken Avenue	West Leg Azusa Court	
	Pedestrians	Pedestrians	Pedestrians	Pedestrians	
4:00 PM	0	0	0	0	0
4:15 PM	1	0	0	1	2
4:30 PM	0	0	0	1	1
4:45 PM	0	0	0	1	1
5:00 PM	0	0	0	0	0
5:15 PM	0	0	0	0	0
5:30 PM	0	0	0	0	0
5:45 PM	0	0	0	0	0
TOTAL VOLUMES:	1	0	0	3	4

Counts Unlimited, Inc.
PO Box 1178
Corona, CA 92878
951-268-6268

Location: Rancho Cucamonga
N/S: Milliken Avenue
E/W: Azusa Court

Date: 9/20/2022
Day: Tuesday

BICYCLES

	Southbound Milliken Avenue			Westbound Dead End			Northbound Milliken Avenue			Eastbound Azusa Court			
	Left	Thru	Right	Left	Thru	Right	Left	Thru	Right	Left	Thru	Right	
7:00 AM	0	1	0	0	0	0	0	0	0	0	0	0	1
7:15 AM	0	0	0	0	0	0	0	0	0	0	0	0	0
7:30 AM	0	0	0	0	0	0	0	0	0	0	0	0	0
7:45 AM	0	0	0	0	0	0	0	0	0	0	0	0	0
8:00 AM	0	0	0	0	0	0	0	0	0	0	0	0	0
8:15 AM	0	1	0	0	0	0	0	0	0	0	0	0	1
8:30 AM	0	1	0	0	0	0	0	0	0	0	0	0	1
8:45 AM	0	0	0	0	0	0	0	0	0	0	0	0	0
TOTAL VOLUMES:	0	3	0	0	0	0	0	0	0	0	0	0	3

	Southbound Milliken Avenue			Westbound Dead End			Northbound Milliken Avenue			Eastbound Azusa Court			
	Left	Thru	Right	Left	Thru	Right	Left	Thru	Right	Left	Thru	Right	
4:00 PM	0	0	0	0	0	0	0	0	0	0	0	0	0
4:15 PM	0	1	0	0	0	0	0	1	0	0	0	0	2
4:30 PM	0	0	0	0	0	0	0	0	0	0	0	0	0
4:45 PM	0	0	0	0	0	0	0	2	0	1	0	0	3
5:00 PM	0	1	0	0	0	0	0	0	0	0	0	0	1
5:15 PM	0	0	0	0	0	0	0	0	0	0	0	0	0
5:30 PM	0	1	0	0	0	0	0	0	0	0	0	0	1
5:45 PM	0	0	1	0	0	0	1	2	0	0	0	0	4
TOTAL VOLUMES:	0	3	1	0	0	0	1	5	0	1	0	0	11

Counts Unlimited, Inc.
PO Box 1178
Corona, CA 92878
951-268-6268

Counts Unlimited, Inc.
PO Box 1178
Corona, CA 92878
(951)268-6268

City of Rancho Cucamonga
N/S: Milliken Avenue
E/W: 7th Street
Weather: Clear

File Name : 08_RNC_Mil_7th AM
Site Code : 00322818
Start Date : 9/20/2022
Page No : 1

Groups Printed- Passenger Vehicles - Large 2 Axle Vehicles - 3 Axle Vehicles - 4+ Axle Trucks

	Milliken Avenue Southbound				7th Street Westbound				Milliken Avenue Northbound				7th Street Eastbound				
Start Time	Left	Thru	Right	App. Total	Left	Thru	Right	App. Total	Left	Thru	Right	App. Total	Left	Thru	Right	App. Total	Int. Total
07:00 AM	6	130	0	136	1	1	1	3	15	116	1	132	5	0	3	8	279
07:15 AM	6	140	2	148	0	0	1	1	7	122	3	132	2	0	7	9	290
07:30 AM	5	238	0	243	2	0	2	4	11	141	1	153	5	0	5	10	410
07:45 AM	5	241	0	246	2	0	1	3	39	197	6	242	16	0	12	28	519
Total	22	749	2	773	5	1	5	11	72	576	11	659	28	0	27	55	1498
08:00 AM	2	252	3	257	1	0	1	2	11	160	5	176	11	0	1	12	447
08:15 AM	4	275	4	283	5	0	1	6	17	170	2	189	5	0	6	11	489
08:30 AM	4	255	0	259	1	0	2	3	28	182	11	221	9	0	3	12	495
08:45 AM	4	203	6	213	5	1	2	8	20	178	5	203	8	1	1	10	434
Total	14	985	13	1012	12	1	6	19	76	690	23	789	33	1	11	45	1865
Grand Total	36	1734	15	1785	17	2	11	30	148	1266	34	1448	61	1	38	100	3363
Apprch %	2	97.1	0.8		56.7	6.7	36.7		10.2	87.4	2.3		61	1	38		
Total %	1.1	51.6	0.4	53.1	0.5	0.1	0.3	0.9	4.4	37.6	1	43.1	1.8	0	1.1	3	
Passenger Vehicles	32	1627	15	1674	11	1	7	19	140	1170	23	1333	59	1	35	95	3121
% Passenger Vehicles	88.9	93.8	100	93.8	64.7	50	63.6	63.3	94.6	92.4	67.6	92.1	96.7	100	92.1	95	92.8
Large 2 Axle Vehicles	1	28	0	29	1	0	1	2	7	28	1	36	2	0	3	5	72
% Large 2 Axle Vehicles	2.8	1.6	0	1.6	5.9	0	9.1	6.7	4.7	2.2	2.9	2.5	3.3	0	7.9	5	2.1
3 Axle Vehicles	0	21	0	21	0	1	0	1	1	11	4	16	0	0	0	0	38
% 3 Axle Vehicles	0	1.2	0	1.2	0	50	0	3.3	0.7	0.9	11.8	1.1	0	0	0	0	1.1
4+ Axle Trucks	3	58	0	61	5	0	3	8	0	57	6	63	0	0	0	0	132
% 4+ Axle Trucks	8.3	3.3	0	3.4	29.4	0	27.3	26.7	0	4.5	17.6	4.4	0	0	0	0	3.9

	Milliken Avenue Southbound				7th Street Westbound				Milliken Avenue Northbound				7th Street Eastbound				
Start Time	Left	Thru	Right	App. Total	Left	Thru	Right	App. Total	Left	Thru	Right	App. Total	Left	Thru	Right	App. Total	Int. Total
Peak Hour Analysis From 07:00 AM to 08:45 AM - Peak 1 of 1																	
Peak Hour for Entire Intersection Begins at 07:45 AM																	
07:45 AM	**5**	241	0	246	2	0	1	3	**39**	**197**	6	**242**	**16**	0	**12**	**28**	**519**
08:00 AM	2	252	3	257	1	0	1	2	11	160	5	176	11	0	1	12	447
08:15 AM	4	**275**	**4**	**283**	**5**	0	1	**6**	17	170	2	189	5	0	6	11	489
08:30 AM	4	255	0	259	1	0	**2**	3	28	182	**11**	221	9	0	3	12	495
Total Volume	15	1023	7	1045	9	0	5	14	95	709	24	828	41	0	22	63	1950
% App. Total	1.4	97.9	0.7		64.3	0	35.7		11.5	85.6	2.9		65.1	0	34.9		
PHF	.750	.930	.438	.923	.450	.000	.625	.583	.609	.900	.545	.855	.641	.000	.458	.563	.939

Counts Unlimited, Inc.
PO Box 1178
Corona, CA 92878
(951)268-6268

City of Rancho Cucamonga
N/S: Milliken Avenue
E/W: 7th Street
Weather: Clear

File Name : 08_RNC_Mil_7th AM
Site Code : 00322818
Start Date : 9/20/2022
Page No : 2

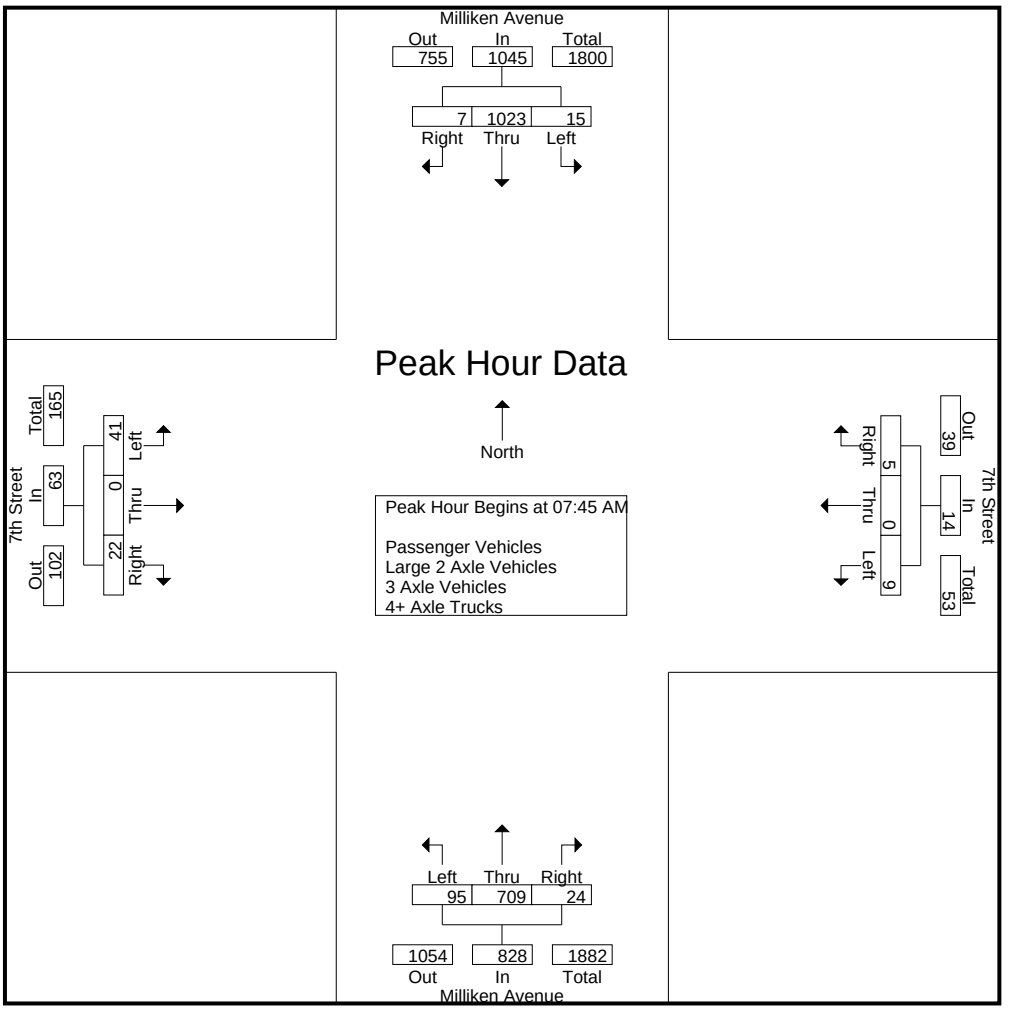

Peak Hour Analysis From 07:00 AM to 08:45 AM - Peak 1 of 1
Peak Hour for Each Approach Begins at:

	07:45 AM				08:00 AM				07:45 AM				07:45 AM			
+0 mins.	**5**	241	0	246	1	0	1	2	**39**	**197**	6	**242**	**16**	0	**12**	**28**
+15 mins.	2	252	3	257	**5**	0	1	6	11	160	5	176	11	0	1	12
+30 mins.	4	**275**	**4**	**283**	1	0	**2**	3	17	170	2	189	5	0	6	11
+45 mins.	4	255	0	259	5	**1**	2	**8**	28	182	**11**	221	9	0	3	12
Total Volume	15	1023	7	1045	12	1	6	19	95	709	24	828	41	0	22	63
% App. Total	1.4	97.9	0.7		63.2	5.3	31.6		11.5	85.6	2.9		65.1	0	34.9	
PHF	.750	.930	.438	.923	.600	.250	.750	.594	.609	.900	.545	.855	.641	.000	.458	.563

Counts Unlimited, Inc.
PO Box 1178
Corona, CA 92878
(951)268-6268

City of Rancho Cucamonga
N/S: Milliken Avenue
E/W: 7th Street
Weather: Clear

File Name : 08_RNC_Mil_7th AM
Site Code : 00322818
Start Date : 9/20/2022
Page No : 1

Groups Printed- Passenger Vehicles

	Milliken Avenue Southbound				7th Street Westbound				Milliken Avenue Northbound				7th Street Eastbound				
Start Time	Left	Thru	Right	App. Total	Left	Thru	Right	App. Total	Left	Thru	Right	App. Total	Left	Thru	Right	App. Total	Int. Total
07:00 AM	6	117	0	123	0	1	1	2	15	104	1	120	5	0	3	8	253
07:15 AM	5	131	2	138	0	0	1	1	6	114	2	122	2	0	7	9	270
07:30 AM	3	221	0	224	1	0	1	2	9	132	1	142	5	0	4	9	377
07:45 AM	5	228	0	233	2	0	1	3	36	189	4	229	15	0	12	27	492
Total	19	697	2	718	3	1	4	8	66	539	8	613	27	0	26	53	1392
08:00 AM	2	242	3	247	1	0	1	2	11	147	1	159	10	0	1	11	419
08:15 AM	3	259	4	266	5	0	0	5	16	161	1	178	5	0	5	10	459
08:30 AM	4	239	0	243	0	0	1	1	28	164	8	200	9	0	2	11	455
08:45 AM	4	190	6	200	2	0	1	3	19	159	5	183	8	1	1	10	396
Total	13	930	13	956	8	0	3	11	74	631	15	720	32	1	9	42	1729
Grand Total	32	1627	15	1674	11	1	7	19	140	1170	23	1333	59	1	35	95	3121
Apprch %	1.9	97.2	0.9		57.9	5.3	36.8		10.5	87.8	1.7		62.1	1.1	36.8		
Total %	1	52.1	0.5	53.6	0.4	0	0.2	0.6	4.5	37.5	0.7	42.7	1.9	0	1.1	3	

	Milliken Avenue Southbound				7th Street Westbound				Milliken Avenue Northbound				7th Street Eastbound				
Start Time	Left	Thru	Right	App. Total	Left	Thru	Right	App. Total	Left	Thru	Right	App. Total	Left	Thru	Right	App. Total	Int. Total
Peak Hour Analysis From 07:45 AM to 08:30 AM - Peak 1 of 1																	
Peak Hour for Entire Intersection Begins at 07:45 AM																	
07:45 AM	**5**	228	0	233	2	0	**1**	3	**36**	**189**	4	**229**	**15**	0	**12**	**27**	**492**
08:00 AM	2	242	3	247	1	0	1	2	11	147	1	159	10	0	1	11	419
08:15 AM	3	**259**	**4**	**266**	**5**	0	0	**5**	16	161	1	178	5	0	5	10	459
08:30 AM	4	239	0	243	0	0	1	1	28	164	**8**	200	9	0	2	11	455
Total Volume	14	968	7	989	8	0	3	11	91	661	14	766	39	0	20	59	1825
% App. Total	1.4	97.9	0.7		72.7	0	27.3		11.9	86.3	1.8		66.1	0	33.9		
PHF	.700	.934	.438	.930	.400	.000	.750	.550	.632	.874	.438	.836	.650	.000	.417	.546	.927

Counts Unlimited, Inc.
PO Box 1178
Corona, CA 92878
(951)268-6268

City of Rancho Cucamonga
N/S: Milliken Avenue
E/W: 7th Street
Weather: Clear

File Name : 08_RNC_Mil_7th AM
Site Code : 00322818
Start Date : 9/20/2022
Page No : 2

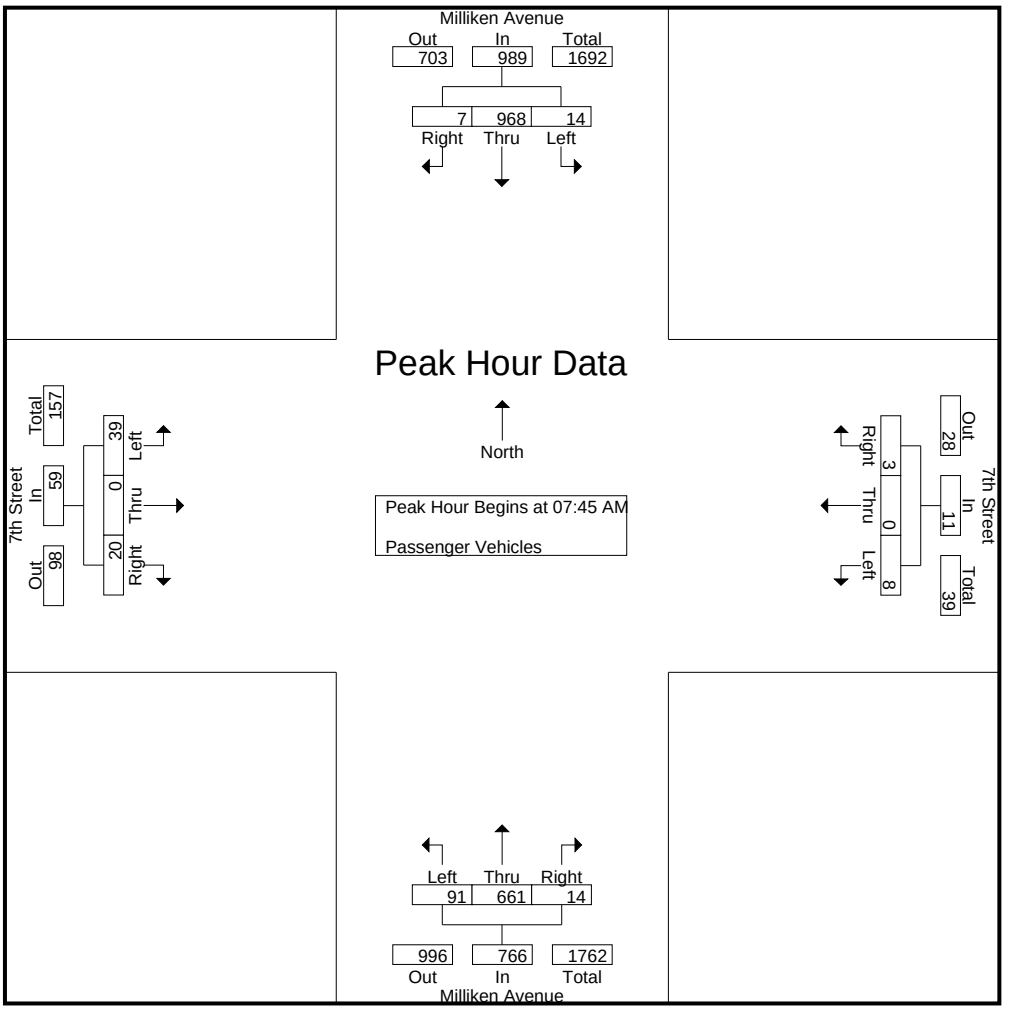

Peak Hour Analysis From 07:45 AM to 08:30 AM - Peak 1 of 1
Peak Hour for Each Approach Begins at:

	07:45 AM				07:45 AM				07:45 AM				07:45 AM			
+0 mins.	**5**	228	0	233	2	0	**1**	3	**36**	**189**	4	**229**	**15**	0	**12**	**27**
+15 mins.	2	242	3	247	1	0	1	2	11	147	1	159	10	0	1	11
+30 mins.	3	**259**	**4**	**266**	**5**	0	0	**5**	16	161	1	178	5	0	5	10
+45 mins.	4	239	0	243	0	0	1	1	28	164	**8**	200	9	0	2	11
Total Volume	14	968	7	989	8	0	3	11	91	661	14	766	39	0	20	59
% App. Total	1.4	97.9	0.7		72.7	0	27.3		11.9	86.3	1.8		66.1	0	33.9	
PHF	.700	.934	.438	.930	.400	.000	.750	.550	.632	.874	.438	.836	.650	.000	.417	.546

Counts Unlimited, Inc.
PO Box 1178
Corona, CA 92878
(951)268-6268

City of Rancho Cucamonga
N/S: Milliken Avenue
E/W: 7th Street
Weather: Clear

File Name : 08_RNC_Mil_7th AM
Site Code : 00322818
Start Date : 9/20/2022
Page No : 1

Groups Printed- Large 2 Axle Vehicles

	Milliken Avenue Southbound				7th Street Westbound				Milliken Avenue Northbound				7th Street Eastbound				
Start Time	Left	Thru	Right	App. Total	Left	Thru	Right	App. Total	Left	Thru	Right	App. Total	Left	Thru	Right	App. Total	Int. Total
07:00 AM	0	6	0	6	0	0	0	0	0	7	0	7	0	0	0	0	13
07:15 AM	0	2	0	2	0	0	0	0	1	2	0	3	0	0	0	0	5
07:30 AM	0	8	0	8	0	0	0	0	2	3	0	5	0	0	1	1	14
07:45 AM	0	2	0	2	0	0	0	0	2	2	0	4	1	0	0	1	7
Total	0	18	0	18	0	0	0	0	5	14	0	19	1	0	1	2	39
08:00 AM	0	2	0	2	0	0	0	0	0	2	0	2	1	0	0	1	5
08:15 AM	1	2	0	3	0	0	0	0	1	1	0	2	0	0	1	1	6
08:30 AM	0	4	0	4	0	0	0	0	0	7	1	8	0	0	1	1	13
08:45 AM	0	2	0	2	1	0	1	2	1	4	0	5	0	0	0	0	9
Total	1	10	0	11	1	0	1	2	2	14	1	17	1	0	2	3	33
Grand Total	1	28	0	29	1	0	1	2	7	28	1	36	2	0	3	5	72
Apprch %	3.4	96.6	0		50	0	50		19.4	77.8	2.8		40	0	60		
Total %	1.4	38.9	0	40.3	1.4	0	1.4	2.8	9.7	38.9	1.4	50	2.8	0	4.2	6.9	

	Milliken Avenue Southbound				7th Street Westbound				Milliken Avenue Northbound				7th Street Eastbound				
Start Time	Left	Thru	Right	App. Total	Left	Thru	Right	App. Total	Left	Thru	Right	App. Total	Left	Thru	Right	App. Total	Int. Total
Peak Hour Analysis From 07:45 AM to 08:30 AM - Peak 1 of 1																	
Peak Hour for Entire Intersection Begins at 07:45 AM																	
07:45 AM	0	2	0	2	0	0	0	0	**2**	2	0	4	**1**	0	0	**1**	7
08:00 AM	0	2	0	2	0	0	0	0	0	2	0	2	1	0	0	1	5
08:15 AM	**1**	2	0	3	0	0	0	0	1	1	0	2	0	0	**1**	1	6
08:30 AM	0	**4**	0	**4**	0	0	0	0	0	**7**	**1**	**8**	0	0	1	1	**13**
Total Volume	1	10	0	11	0	0	0	0	3	12	1	16	2	0	2	4	31
% App. Total	9.1	90.9	0		0	0	0		18.8	75	6.2		50	0	50		
PHF	.250	.625	.000	.688	.000	.000	.000	.000	.375	.429	.250	.500	.500	.000	.500	1.00	.596

Counts Unlimited, Inc.
PO Box 1178
Corona, CA 92878
(951)268-6268

City of Rancho Cucamonga
N/S: Milliken Avenue
E/W: 7th Street
Weather: Clear

File Name : 08_RNC_Mil_7th AM
Site Code : 00322818
Start Date : 9/20/2022
Page No : 2

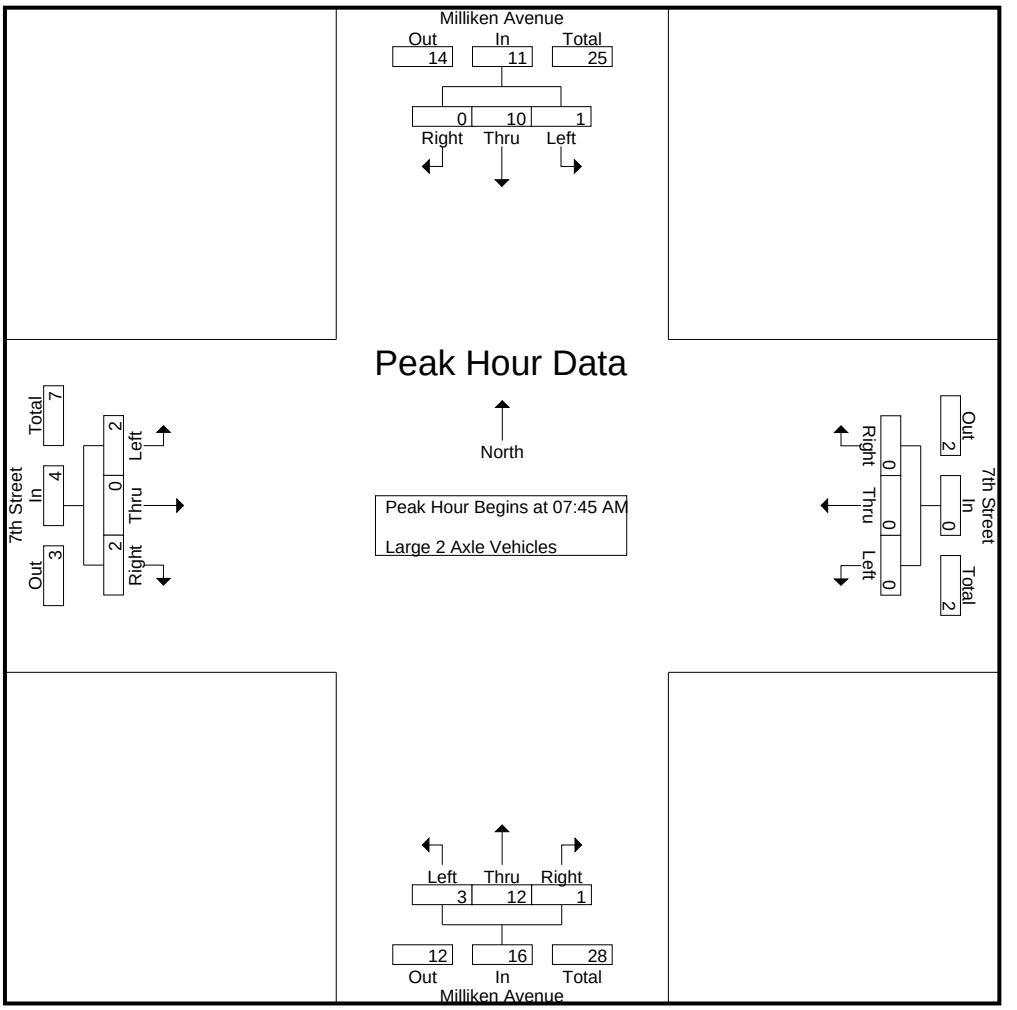

Peak Hour Analysis From 07:45 AM to 08:30 AM - Peak 1 of 1
Peak Hour for Each Approach Begins at:

	07:45 AM				07:45 AM				07:45 AM				07:45 AM			
+0 mins.	0	2	0	2	0	0	0	0	**2**	2	0	4	**1**	0	0	**1**
+15 mins.	0	2	0	2	0	0	0	0	0	2	0	2	1	0	0	1
+30 mins.	**1**	2	0	3	0	0	0	0	1	1	0	2	0	0	**1**	1
+45 mins.	0	**4**	0	**4**	0	0	0	0	0	**7**	**1**	**8**	0	0	1	1
Total Volume	1	10	0	11	0	0	0	0	3	12	1	16	2	0	2	4
% App. Total	9.1	90.9	0		0	0	0		18.8	75	6.2		50	0	50	
PHF	.250	.625	.000	.688	.000	.000	.000	.000	.375	.429	.250	.500	.500	.000	.500	1.000

Counts Unlimited, Inc.
PO Box 1178
Corona, CA 92878
(951)268-6268

City of Rancho Cucamonga
N/S: Milliken Avenue
E/W: 7th Street
Weather: Clear

File Name : 08_RNC_Mil_7th AM
Site Code : 00322818
Start Date : 9/20/2022
Page No : 1

Groups Printed- 3 Axle Vehicles

	Milliken Avenue Southbound				7th Street Westbound				Milliken Avenue Northbound				7th Street Eastbound				
Start Time	Left	Thru	Right	App. Total	Left	Thru	Right	App. Total	Left	Thru	Right	App. Total	Left	Thru	Right	App. Total	Int. Total
07:00 AM	0	1	0	1	0	0	0	0	0	1	0	1	0	0	0	0	2
07:15 AM	0	2	0	2	0	0	0	0	0	0	1	1	0	0	0	0	3
07:30 AM	0	4	0	4	0	0	0	0	0	1	0	1	0	0	0	0	5
07:45 AM	0	3	0	3	0	0	0	0	1	1	1	3	0	0	0	0	6
Total	0	10	0	10	0	0	0	0	1	3	2	6	0	0	0	0	16
08:00 AM	0	1	0	1	0	0	0	0	0	2	1	3	0	0	0	0	4
08:15 AM	0	3	0	3	0	0	0	0	0	4	0	4	0	0	0	0	7
08:30 AM	0	5	0	5	0	0	0	0	0	1	1	2	0	0	0	0	7
08:45 AM	0	2	0	2	0	1	0	1	0	1	0	1	0	0	0	0	4
Total	0	11	0	11	0	1	0	1	0	8	2	10	0	0	0	0	22
Grand Total	0	21	0	21	0	1	0	1	1	11	4	16	0	0	0	0	38
Apprch %	0	100	0		0	100	0		6.2	68.8	25		0	0	0		
Total %	0	55.3	0	55.3	0	2.6	0	2.6	2.6	28.9	10.5	42.1	0	0	0	0	

	Milliken Avenue Southbound				7th Street Westbound				Milliken Avenue Northbound				7th Street Eastbound				
Start Time	Left	Thru	Right	App. Total	Left	Thru	Right	App. Total	Left	Thru	Right	App. Total	Left	Thru	Right	App. Total	Int. Total
Peak Hour Analysis From 07:45 AM to 08:30 AM - Peak 1 of 1																	
Peak Hour for Entire Intersection Begins at 07:45 AM																	
07:45 AM	0	3	0	3	0	0	0	0	**1**	1	**1**	3	0	0	0	0	6
08:00 AM	0	1	0	1	0	0	0	0	0	2	1	3	0	0	0	0	4
08:15 AM	0	3	0	3	0	0	0	0	0	**4**	0	**4**	0	0	0	0	**7**
08:30 AM	0	**5**	0	**5**	0	0	0	0	0	1	1	2	0	0	0	0	7
Total Volume	0	12	0	12	0	0	0	0	1	8	3	12	0	0	0	0	24
% App. Total	0	100	0		0	0	0		8.3	66.7	25		0	0	0		
PHF	.000	.600	.000	.600	.000	.000	.000	.000	.250	.500	.750	.750	.000	.000	.000	.000	.857

Counts Unlimited, Inc.
PO Box 1178
Corona, CA 92878
(951)268-6268

City of Rancho Cucamonga
N/S: Milliken Avenue
E/W: 7th Street
Weather: Clear

File Name : 08_RNC_Mil_7th AM
Site Code : 00322818
Start Date : 9/20/2022
Page No : 2

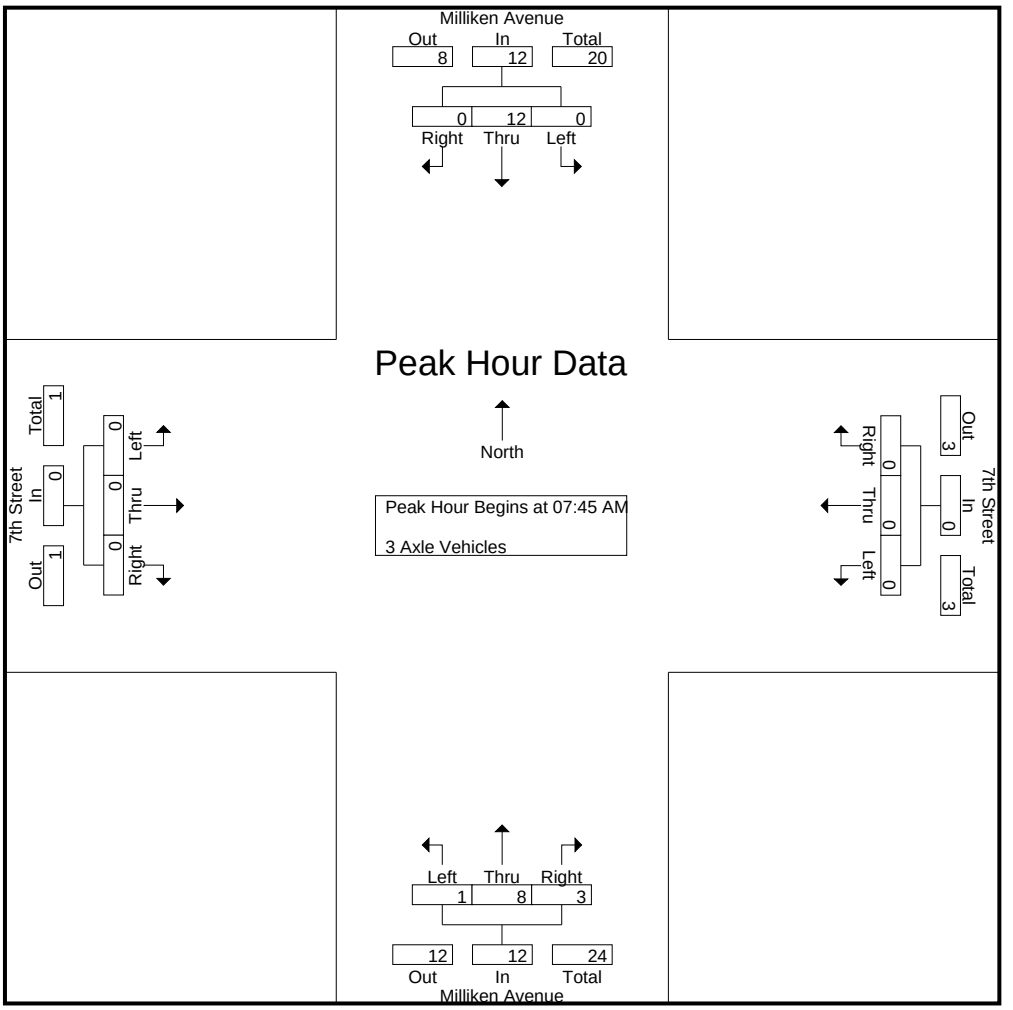

Peak Hour Analysis From 07:45 AM to 08:30 AM - Peak 1 of 1
Peak Hour for Each Approach Begins at:

	07:45 AM				07:45 AM				07:45 AM				07:45 AM			
+0 mins.	0	3	0	3	0	0	0	0	**1**	1	**1**	3	0	0	0	0
+15 mins.	0	1	0	1	0	0	0	0	0	2	1	3	0	0	0	0
+30 mins.	0	3	0	3	0	0	0	0	0	**4**	0	**4**	0	0	0	0
+45 mins.	0	**5**	0	**5**	0	0	0	0	0	1	1	2	0	0	0	0
Total Volume	0	12	0	12	0	0	0	0	1	8	3	12	0	0	0	0
% App. Total	0	100	0		0	0	0		8.3	66.7	25		0	0	0	
PHF	.000	.600	.000	.600	.000	.000	.000	.000	.250	.500	.750	.750	.000	.000	.000	.000

Counts Unlimited, Inc.
PO Box 1178
Corona, CA 92878
(951)268-6268

City of Rancho Cucamonga
N/S: Milliken Avenue
E/W: 7th Street
Weather: Clear

File Name : 08_RNC_Mil_7th AM
Site Code : 00322818
Start Date : 9/20/2022
Page No : 1

Groups Printed- 4+ Axle Trucks

	Milliken Avenue Southbound				7th Street Westbound				Milliken Avenue Northbound				7th Street Eastbound				
Start Time	Left	Thru	Right	App. Total	Left	Thru	Right	App. Total	Left	Thru	Right	App. Total	Left	Thru	Right	App. Total	Int. Total
07:00 AM	0	6	0	6	1	0	0	1	0	4	0	4	0	0	0	0	11
07:15 AM	1	5	0	6	0	0	0	0	0	6	0	6	0	0	0	0	12
07:30 AM	2	5	0	7	1	0	1	2	0	5	0	5	0	0	0	0	14
07:45 AM	0	8	0	8	0	0	0	0	0	5	1	6	0	0	0	0	14
Total	3	24	0	27	2	0	1	3	0	20	1	21	0	0	0	0	51
08:00 AM	0	7	0	7	0	0	0	0	0	9	3	12	0	0	0	0	19
08:15 AM	0	11	0	11	0	0	1	1	0	4	1	5	0	0	0	0	17
08:30 AM	0	7	0	7	1	0	1	2	0	10	1	11	0	0	0	0	20
08:45 AM	0	9	0	9	2	0	0	2	0	14	0	14	0	0	0	0	25
Total	0	34	0	34	3	0	2	5	0	37	5	42	0	0	0	0	81
Grand Total	3	58	0	61	5	0	3	8	0	57	6	63	0	0	0	0	132
Apprch %	4.9	95.1	0		62.5	0	37.5		0	90.5	9.5		0	0	0		
Total %	2.3	43.9	0	46.2	3.8	0	2.3	6.1	0	43.2	4.5	47.7	0	0	0	0	

	Milliken Avenue Southbound				7th Street Westbound				Milliken Avenue Northbound				7th Street Eastbound				
Start Time	Left	Thru	Right	App. Total	Left	Thru	Right	App. Total	Left	Thru	Right	App. Total	Left	Thru	Right	App. Total	Int. Total
Peak Hour Analysis From 07:45 AM to 08:30 AM - Peak 1 of 1																	
Peak Hour for Entire Intersection Begins at 07:45 AM																	
07:45 AM	0	8	0	8	0	0	0	0	0	5	1	6	0	0	0	0	14
08:00 AM	0	7	0	7	0	0	0	0	0	9	**3**	**12**	0	0	0	0	19
08:15 AM	0	**11**	0	**11**	0	0	**1**	1	0	4	1	5	0	0	0	0	17
08:30 AM	0	7	0	7	**1**	0	1	**2**	0	**10**	1	11	0	0	0	0	**20**
Total Volume	0	33	0	33	1	0	2	3	0	28	6	34	0	0	0	0	70
% App. Total	0	100	0		33.3	0	66.7		0	82.4	17.6		0	0	0		
PHF	.000	.750	.000	.750	.250	.000	.500	.375	.000	.700	.500	.708	.000	.000	.000	.000	.875

Counts Unlimited, Inc.
PO Box 1178
Corona, CA 92878
(951)268-6268

City of Rancho Cucamonga
N/S: Milliken Avenue
E/W: 7th Street
Weather: Clear

File Name : 08_RNC_Mil_7th AM
Site Code : 00322818
Start Date : 9/20/2022
Page No : 2

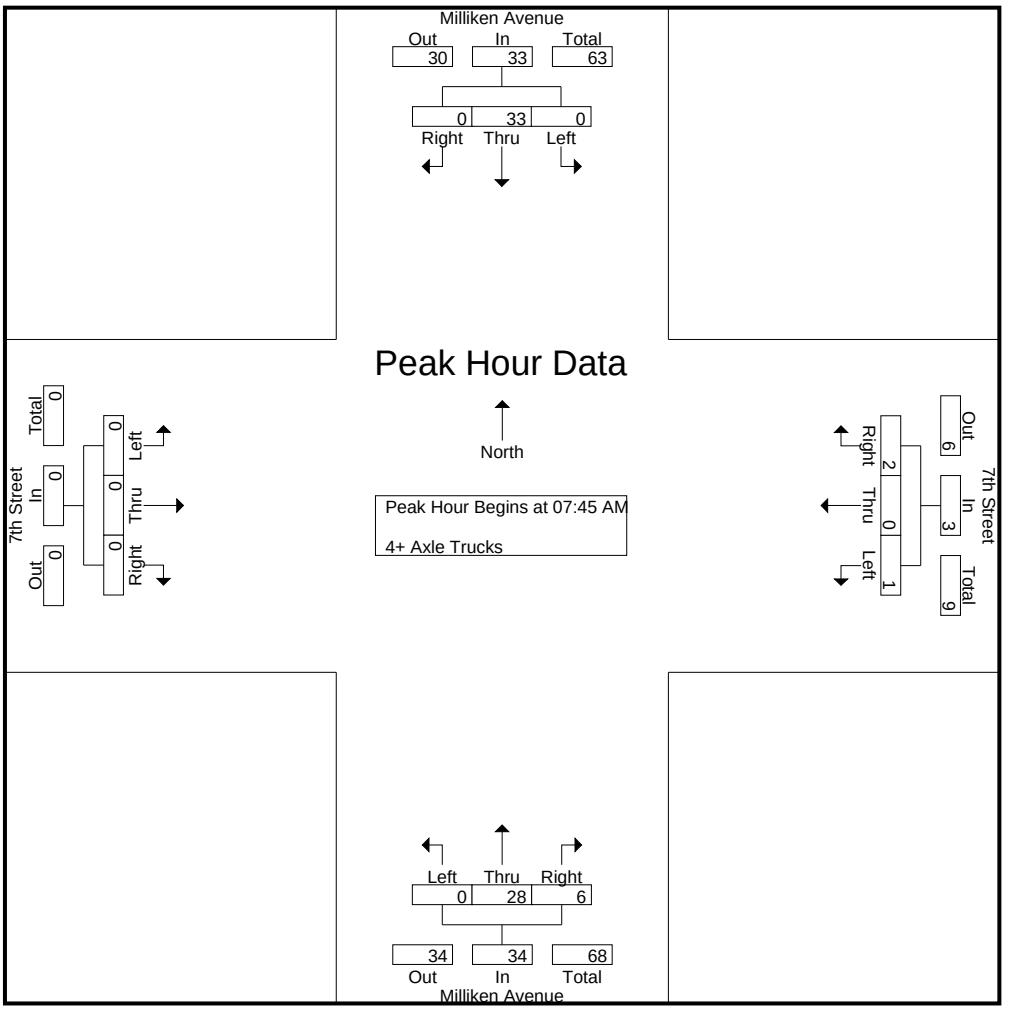

Peak Hour Analysis From 07:45 AM to 08:30 AM - Peak 1 of 1
Peak Hour for Each Approach Begins at:

	07:45 AM				07:45 AM				07:45 AM				07:45 AM			
+0 mins.	0	8	0	8	0	0	0	0	0	5	1	6	0	0	0	0
+15 mins.	0	7	0	7	0	0	0	0	0	9	**3**	**12**	0	0	0	0
+30 mins.	0	**11**	0	**11**	0	0	**1**	1	0	4	1	5	0	0	0	0
+45 mins.	0	7	0	7	**1**	0	1	**2**	0	**10**	1	11	0	0	0	0
Total Volume	0	33	0	33	1	0	2	3	0	28	6	34	0	0	0	0
% App. Total	0	100	0		33.3	0	66.7		0	82.4	17.6		0	0	0	
PHF	.000	.750	.000	.750	.250	.000	.500	.375	.000	.700	.500	.708	.000	.000	.000	.000

Counts Unlimited, Inc.
PO Box 1178
Corona, CA 92878
(951)268-6268

City of Rancho Cucamonga
N/S: Milliken Avenue
E/W: 7th Street
Weather: Clear

File Name : 08_RNC_Mil_7th PM
Site Code : 00322818
Start Date : 9/20/2022
Page No : 1

Groups Printed- Passenger Vehicles - Large 2 Axle Vehicles - 3 Axle Vehicles - 4+ Axle Trucks

	Milliken Avenue Southbound				7th Street Westbound				Milliken Avenue Northbound				7th Street Eastbound				
Start Time	Left	Thru	Right	App. Total	Left	Thru	Right	App. Total	Left	Thru	Right	App. Total	Left	Thru	Right	App. Total	Int. Total
04:00 PM	3	203	1	207	6	0	9	15	15	397	1	413	11	0	15	26	661
04:15 PM	2	234	2	238	2	0	4	6	16	363	1	380	16	0	17	33	657
04:30 PM	1	221	1	223	8	1	7	16	15	379	4	398	10	0	16	26	663
04:45 PM	7	239	1	247	6	0	9	15	20	358	1	379	45	1	20	66	707
Total	13	897	5	915	22	1	29	52	66	1497	7	1570	82	1	68	151	2688
05:00 PM	3	237	1	241	10	0	10	20	16	427	0	443	31	0	23	54	758
05:15 PM	2	237	2	241	0	1	1	2	18	450	0	468	37	0	19	56	767
05:30 PM	2	197	0	199	7	0	4	11	16	392	1	409	17	1	8	26	645
05:45 PM	2	169	1	172	1	0	7	8	26	360	0	386	9	0	8	17	583
Total	9	840	4	853	18	1	22	41	76	1629	1	1706	94	1	58	153	2753
Grand Total	22	1737	9	1768	40	2	51	93	142	3126	8	3276	176	2	126	304	5441
Apprch %	1.2	98.2	0.5		43	2.2	54.8		4.3	95.4	0.2		57.9	0.7	41.4		
Total %	0.4	31.9	0.2	32.5	0.7	0	0.9	1.7	2.6	57.5	0.1	60.2	3.2	0	2.3	5.6	
Passenger Vehicles	21	1667	8	1696	36	1	49	86	139	3041	6	3186	174	1	122	297	5265
% Passenger Vehicles	95.5	96	88.9	95.9	90	50	96.1	92.5	97.9	97.3	75	97.3	98.9	50	96.8	97.7	96.8
Large 2 Axle Vehicles	1	20	0	21	3	1	0	4	3	21	1	25	2	1	4	7	57
% Large 2 Axle Vehicles	4.5	1.2	0	1.2	7.5	50	0	4.3	2.1	0.7	12.5	0.8	1.1	50	3.2	2.3	1
3 Axle Vehicles	0	9	0	9	0	0	0	0	0	19	0	19	0	0	0	0	28
% 3 Axle Vehicles	0	0.5	0	0.5	0	0	0	0	0	0.6	0	0.6	0	0	0	0	0.5
4+ Axle Trucks	0	41	1	42	1	0	2	3	0	45	1	46	0	0	0	0	91
% 4+ Axle Trucks	0	2.4	11.1	2.4	2.5	0	3.9	3.2	0	1.4	12.5	1.4	0	0	0	0	1.7

	Milliken Avenue Southbound				7th Street Westbound				Milliken Avenue Northbound				7th Street Eastbound				
Start Time	Left	Thru	Right	App. Total	Left	Thru	Right	App. Total	Left	Thru	Right	App. Total	Left	Thru	Right	App. Total	Int. Total
Peak Hour Analysis From 04:00 PM to 05:45 PM - Peak 1 of 1																	
Peak Hour for Entire Intersection Begins at 04:30 PM																	
04:30 PM	1	221	1	223	8	**1**	7	16	15	379	**4**	398	10	0	16	26	663
04:45 PM	**7**	**239**	1	**247**	6	0	9	15	**20**	358	1	379	**45**	**1**	20	**66**	707
05:00 PM	3	237	1	241	**10**	0	**10**	**20**	16	427	0	443	31	0	**23**	54	758
05:15 PM	2	237	**2**	241	0	1	1	2	18	**450**	0	**468**	37	0	19	56	**767**
Total Volume	13	934	5	952	24	2	27	53	69	1614	5	1688	123	1	78	202	2895
% App. Total	1.4	98.1	0.5		45.3	3.8	50.9		4.1	95.6	0.3		60.9	0.5	38.6		
PHF	.464	.977	.625	.964	.600	.500	.675	.663	.863	.897	.313	.902	.683	.250	.848	.765	.944

Counts Unlimited, Inc.
PO Box 1178
Corona, CA 92878
(951)268-6268

City of Rancho Cucamonga
N/S: Milliken Avenue
E/W: 7th Street
Weather: Clear

File Name : 08_RNC_Mil_7th PM
Site Code : 00322818
Start Date : 9/20/2022
Page No : 2

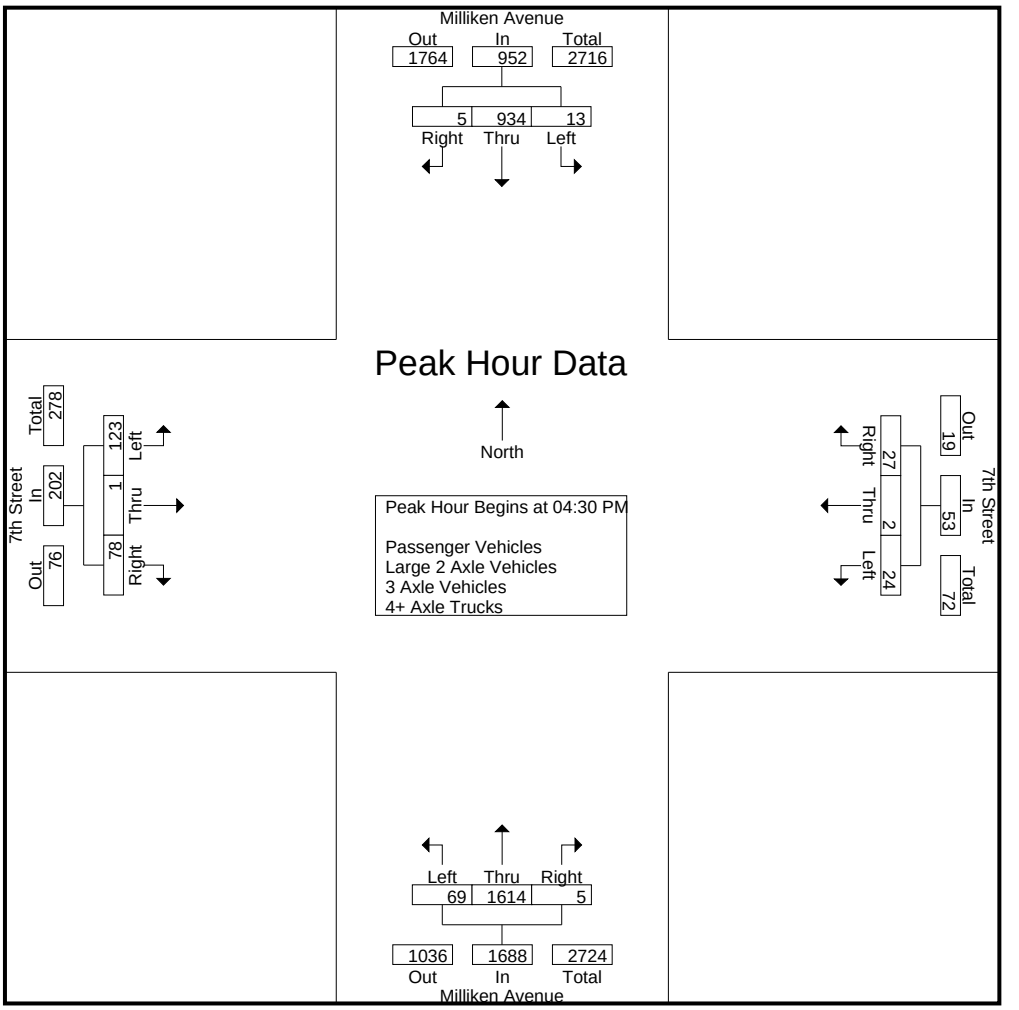

Peak Hour Analysis From 04:00 PM to 05:45 PM - Peak 1 of 1
Peak Hour for Each Approach Begins at:

	04:30 PM				04:15 PM				05:00 PM				04:30 PM			
+0 mins.	1	221	1	223	2	0	4	6	16	427	0	443	10	0	16	26
+15 mins.	**7**	**239**	1	**247**	8	**1**	7	16	18	**450**	0	**468**	**45**	**1**	20	**66**
+30 mins.	3	237	1	241	6	0	9	15	16	392	**1**	409	31	0	**23**	54
+45 mins.	2	237	**2**	241	**10**	0	**10**	**20**	**26**	360	0	386	37	0	19	56
Total Volume	13	934	5	952	26	1	30	57	76	1629	1	1706	123	1	78	202
% App. Total	1.4	98.1	0.5		45.6	1.8	52.6		4.5	95.5	0.1		60.9	0.5	38.6	
PHF	.464	.977	.625	.964	.650	.250	.750	.713	.731	.905	.250	.911	.683	.250	.848	.765

Counts Unlimited, Inc.
PO Box 1178
Corona, CA 92878
(951)268-6268

City of Rancho Cucamonga
N/S: Milliken Avenue
E/W: 7th Street
Weather: Clear

File Name : 08_RNC_Mil_7th PM
Site Code : 00322818
Start Date : 9/20/2022
Page No : 1

Groups Printed- Passenger Vehicles

	Milliken Avenue Southbound				7th Street Westbound				Milliken Avenue Northbound				7th Street Eastbound				
Start Time	Left	Thru	Right	App. Total	Left	Thru	Right	App. Total	Left	Thru	Right	App. Total	Left	Thru	Right	App. Total	Int. Total
04:00 PM	3	190	1	194	6	0	9	15	14	384	1	399	11	0	15	26	634
04:15 PM	2	228	2	232	2	0	3	5	16	352	1	369	15	0	16	31	637
04:30 PM	0	212	1	213	8	0	6	14	15	361	2	378	10	0	16	26	631
04:45 PM	7	227	1	235	4	0	9	13	19	349	1	369	45	0	19	64	681
Total	12	857	5	874	20	0	27	47	64	1446	5	1515	81	0	66	147	2583
05:00 PM	3	226	1	230	9	0	10	19	16	417	0	433	31	0	22	53	735
05:15 PM	2	233	1	236	0	1	1	2	17	443	0	460	36	0	19	55	753
05:30 PM	2	185	0	187	6	0	4	10	16	385	1	402	17	1	8	26	625
05:45 PM	2	166	1	169	1	0	7	8	26	350	0	376	9	0	7	16	569
Total	9	810	3	822	16	1	22	39	75	1595	1	1671	93	1	56	150	2682
Grand Total	21	1667	8	1696	36	1	49	86	139	3041	6	3186	174	1	122	297	5265
Apprch %	1.2	98.3	0.5		41.9	1.2	57		4.4	95.4	0.2		58.6	0.3	41.1		
Total %	0.4	31.7	0.2	32.2	0.7	0	0.9	1.6	2.6	57.8	0.1	60.5	3.3	0	2.3	5.6	

	Milliken Avenue Southbound				7th Street Westbound				Milliken Avenue Northbound				7th Street Eastbound				
Start Time	Left	Thru	Right	App. Total	Left	Thru	Right	App. Total	Left	Thru	Right	App. Total	Left	Thru	Right	App. Total	Int. Total
Peak Hour Analysis From 04:30 PM to 05:15 PM - Peak 1 of 1																	
Peak Hour for Entire Intersection Begins at 04:30 PM																	
04:30 PM	0	212	**1**	213	8	0	6	14	15	361	**2**	378	10	0	16	26	631
04:45 PM	**7**	227	1	235	4	0	9	13	**19**	349	1	369	**45**	0	19	**64**	681
05:00 PM	3	226	1	230	**9**	0	**10**	**19**	16	417	0	433	31	0	**22**	53	735
05:15 PM	2	**233**	1	**236**	0	**1**	1	2	17	**443**	0	**460**	36	0	19	55	**753**
Total Volume	12	898	4	914	21	1	26	48	67	1570	3	1640	122	0	76	198	2800
% App. Total	1.3	98.2	0.4		43.8	2.1	54.2		4.1	95.7	0.2		61.6	0	38.4		
PHF	.429	.964	1.00	.968	.583	.250	.650	.632	.882	.886	.375	.891	.678	.000	.864	.773	.930

Counts Unlimited, Inc.
PO Box 1178
Corona, CA 92878
(951)268-6268

City of Rancho Cucamonga
N/S: Milliken Avenue
E/W: 7th Street
Weather: Clear

File Name : 08_RNC_Mil_7th PM
Site Code : 00322818
Start Date : 9/20/2022
Page No : 2

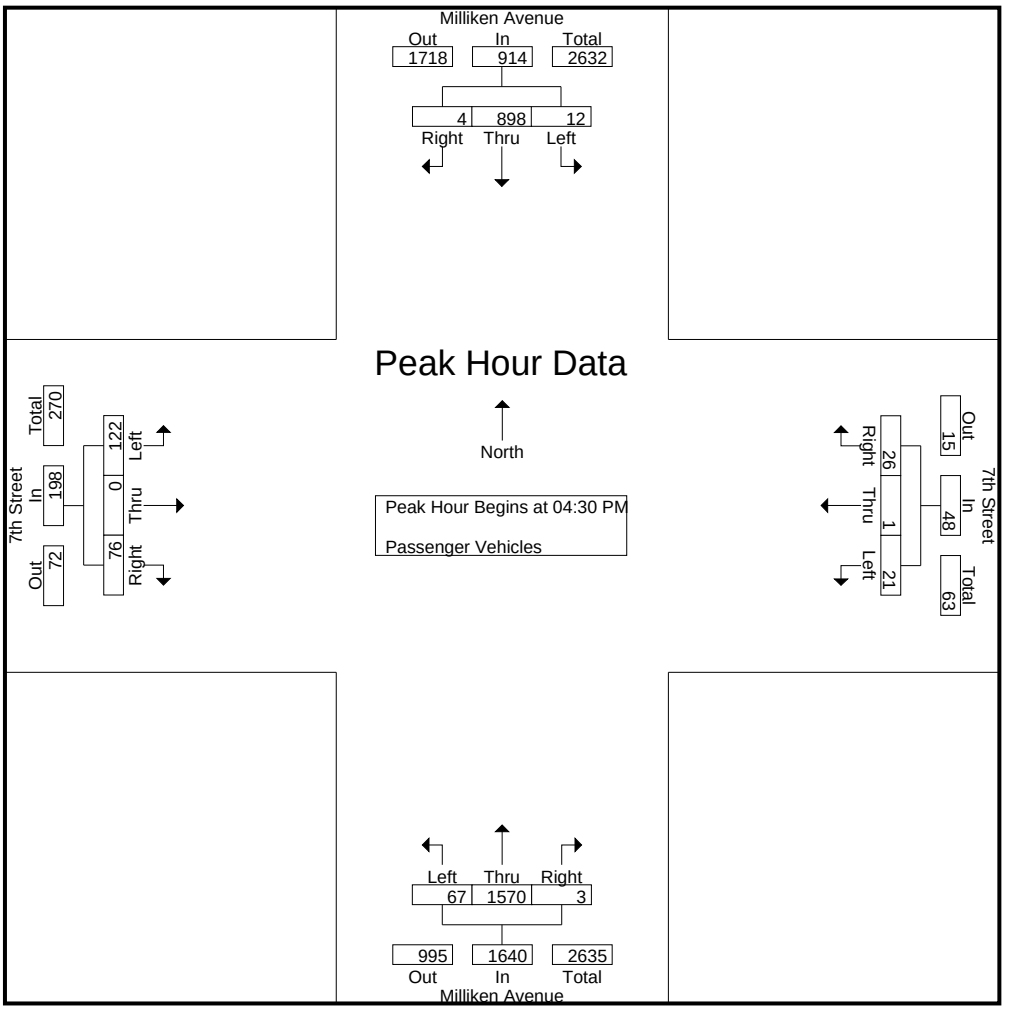

Peak Hour Analysis From 04:30 PM to 05:15 PM - Peak 1 of 1
Peak Hour for Each Approach Begins at:

	04:30 PM				04:30 PM				04:30 PM				04:30 PM			
+0 mins.	0	212	**1**	213	8	0	6	14	15	361	**2**	378	10	0	16	26
+15 mins.	**7**	227	1	235	4	0	9	13	**19**	349	1	369	**45**	0	19	**64**
+30 mins.	3	226	1	230	**9**	0	**10**	**19**	16	417	0	433	31	0	**22**	53
+45 mins.	2	**233**	1	**236**	0	**1**	1	2	17	**443**	0	**460**	36	0	19	55
Total Volume	12	898	4	914	21	1	26	48	67	1570	3	1640	122	0	76	198
% App. Total	1.3	98.2	0.4		43.8	2.1	54.2		4.1	95.7	0.2		61.6	0	38.4	
PHF	.429	.964	1.000	.968	.583	.250	.650	.632	.882	.886	.375	.891	.678	.000	.864	.773

Counts Unlimited, Inc.
PO Box 1178
Corona, CA 92878
(951)268-6268

City of Rancho Cucamonga
N/S: Milliken Avenue
E/W: 7th Street
Weather: Clear

File Name : 08_RNC_Mil_7th PM
Site Code : 00322818
Start Date : 9/20/2022
Page No : 1

Groups Printed- Large 2 Axle Vehicles

	Milliken Avenue Southbound				7th Street Westbound				Milliken Avenue Northbound				7th Street Eastbound				
Start Time	Left	Thru	Right	App. Total	Left	Thru	Right	App. Total	Left	Thru	Right	App. Total	Left	Thru	Right	App. Total	Int. Total
04:00 PM	0	2	0	2	0	0	0	0	1	2	0	3	0	0	0	0	5
04:15 PM	0	2	0	2	0	0	0	0	0	2	0	2	1	0	1	2	6
04:30 PM	1	4	0	5	0	1	0	1	0	6	1	7	0	0	0	0	13
04:45 PM	0	3	0	3	2	0	0	2	1	3	0	4	0	1	1	2	11
Total	1	11	0	12	2	1	0	3	2	13	1	16	1	1	2	4	35
05:00 PM	0	0	0	0	1	0	0	1	0	3	0	3	0	0	1	1	5
05:15 PM	0	2	0	2	0	0	0	0	1	3	0	4	1	0	0	1	7
05:30 PM	0	6	0	6	0	0	0	0	0	1	0	1	0	0	0	0	7
05:45 PM	0	1	0	1	0	0	0	0	0	1	0	1	0	0	1	1	3
Total	0	9	0	9	1	0	0	1	1	8	0	9	1	0	2	3	22
Grand Total	1	20	0	21	3	1	0	4	3	21	1	25	2	1	4	7	57
Apprch %	4.8	95.2	0		75	25	0		12	84	4		28.6	14.3	57.1		
Total %	1.8	35.1	0	36.8	5.3	1.8	0	7	5.3	36.8	1.8	43.9	3.5	1.8	7	12.3	

	Milliken Avenue Southbound				7th Street Westbound				Milliken Avenue Northbound				7th Street Eastbound				
Start Time	Left	Thru	Right	App. Total	Left	Thru	Right	App. Total	Left	Thru	Right	App. Total	Left	Thru	Right	App. Total	Int. Total
Peak Hour Analysis From 04:30 PM to 05:15 PM - Peak 1 of 1																	
Peak Hour for Entire Intersection Begins at 04:30 PM																	
04:30 PM	**1**	**4**	0	**5**	0	**1**	0	1	0	**6**	**1**	**7**	0	0	0	0	**13**
04:45 PM	0	3	0	3	**2**	0	0	**2**	**1**	3	0	4	0	**1**	**1**	**2**	11
05:00 PM	0	0	0	0	1	0	0	1	0	3	0	3	0	0	1	1	5
05:15 PM	0	2	0	2	0	0	0	0	1	3	0	4	**1**	0	0	1	7
Total Volume	1	9	0	10	3	1	0	4	2	15	1	18	1	1	2	4	36
% App. Total	10	90	0		75	25	0		11.1	83.3	5.6		25	25	50		
PHF	.250	.563	.000	.500	.375	.250	.000	.500	.500	.625	.250	.643	.250	.250	.500	.500	.692

Counts Unlimited, Inc.
PO Box 1178
Corona, CA 92878
(951)268-6268

City of Rancho Cucamonga
N/S: Milliken Avenue
E/W: 7th Street
Weather: Clear

File Name : 08_RNC_Mil_7th PM
Site Code : 00322818
Start Date : 9/20/2022
Page No : 2

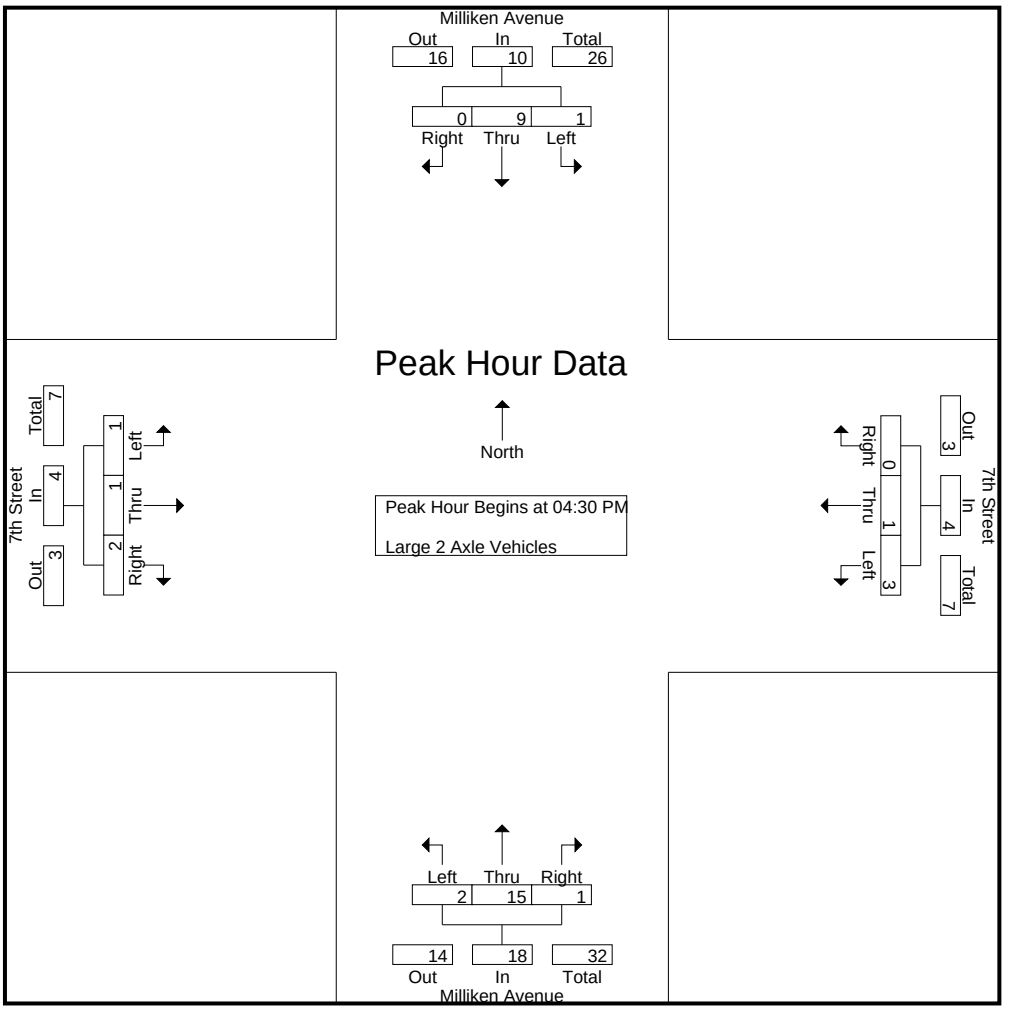

Peak Hour Analysis From 04:30 PM to 05:15 PM - Peak 1 of 1
Peak Hour for Each Approach Begins at:

	04:30 PM				04:30 PM				04:30 PM				04:30 PM			
+0 mins.	**1**	**4**	0	**5**	0	**1**	0	1	0	**6**	**1**	**7**	0	0	0	0
+15 mins.	0	3	0	3	**2**	0	0	**2**	**1**	3	0	4	0	**1**	**1**	**2**
+30 mins.	0	0	0	0	1	0	0	1	0	3	0	3	0	0	1	1
+45 mins.	0	2	0	2	0	0	0	0	1	3	0	4	**1**	0	0	1
Total Volume	1	9	0	10	3	1	0	4	2	15	1	18	1	1	2	4
% App. Total	10	90	0		75	25	0		11.1	83.3	5.6		25	25	50	
PHF	.250	.563	.000	.500	.375	.250	.000	.500	.500	.625	.250	.643	.250	.250	.500	.500

Counts Unlimited, Inc.
PO Box 1178
Corona, CA 92878
(951)268-6268

City of Rancho Cucamonga
N/S: Milliken Avenue
E/W: 7th Street
Weather: Clear

File Name : 08_RNC_Mil_7th PM
Site Code : 00322818
Start Date : 9/20/2022
Page No : 1

Groups Printed- 3 Axle Vehicles

	Milliken Avenue Southbound				7th Street Westbound				Milliken Avenue Northbound				7th Street Eastbound				
Start Time	Left	Thru	Right	App. Total	Left	Thru	Right	App. Total	Left	Thru	Right	App. Total	Left	Thru	Right	App. Total	Int. Total
04:00 PM	0	4	0	4	0	0	0	0	0	3	0	3	0	0	0	0	7
04:15 PM	0	1	0	1	0	0	0	0	0	2	0	2	0	0	0	0	3
04:30 PM	0	0	0	0	0	0	0	0	0	3	0	3	0	0	0	0	3
04:45 PM	0	3	0	3	0	0	0	0	0	3	0	3	0	0	0	0	6
Total	0	8	0	8	0	0	0	0	0	11	0	11	0	0	0	0	19
05:00 PM	0	0	0	0	0	0	0	0	0	2	0	2	0	0	0	0	2
05:15 PM	0	0	0	0	0	0	0	0	0	2	0	2	0	0	0	0	2
05:30 PM	0	0	0	0	0	0	0	0	0	1	0	1	0	0	0	0	1
05:45 PM	0	1	0	1	0	0	0	0	0	3	0	3	0	0	0	0	4
Total	0	1	0	1	0	0	0	0	0	8	0	8	0	0	0	0	9
Grand Total	0	9	0	9	0	0	0	0	0	19	0	19	0	0	0	0	28
Apprch %	0	100	0		0	0	0		0	100	0		0	0	0		
Total %	0	32.1	0	32.1	0	0	0	0	0	67.9	0	67.9	0	0	0	0	

	Milliken Avenue Southbound				7th Street Westbound				Milliken Avenue Northbound				7th Street Eastbound				
Start Time	Left	Thru	Right	App. Total	Left	Thru	Right	App. Total	Left	Thru	Right	App. Total	Left	Thru	Right	App. Total	Int. Total
Peak Hour Analysis From 04:30 PM to 05:15 PM - Peak 1 of 1																	
Peak Hour for Entire Intersection Begins at 04:30 PM																	
04:30 PM	0	0	0	0	0	0	0	0	0	**3**	0	**3**	0	0	0	0	3
04:45 PM	0	**3**	0	**3**	0	0	0	0	0	3	0	3	0	0	0	0	**6**
05:00 PM	0	0	0	0	0	0	0	0	0	2	0	2	0	0	0	0	2
05:15 PM	0	0	0	0	0	0	0	0	0	2	0	2	0	0	0	0	2
Total Volume	0	3	0	3	0	0	0	0	0	10	0	10	0	0	0	0	13
% App. Total	0	100	0		0	0	0		0	100	0		0	0	0		
PHF	.000	.250	.000	.250	.000	.000	.000	.000	.000	.833	.000	.833	.000	.000	.000	.000	.542

Counts Unlimited, Inc.
PO Box 1178
Corona, CA 92878
(951)268-6268

City of Rancho Cucamonga
N/S: Milliken Avenue
E/W: 7th Street
Weather: Clear

File Name : 08_RNC_Mil_7th PM
Site Code : 00322818
Start Date : 9/20/2022
Page No : 2

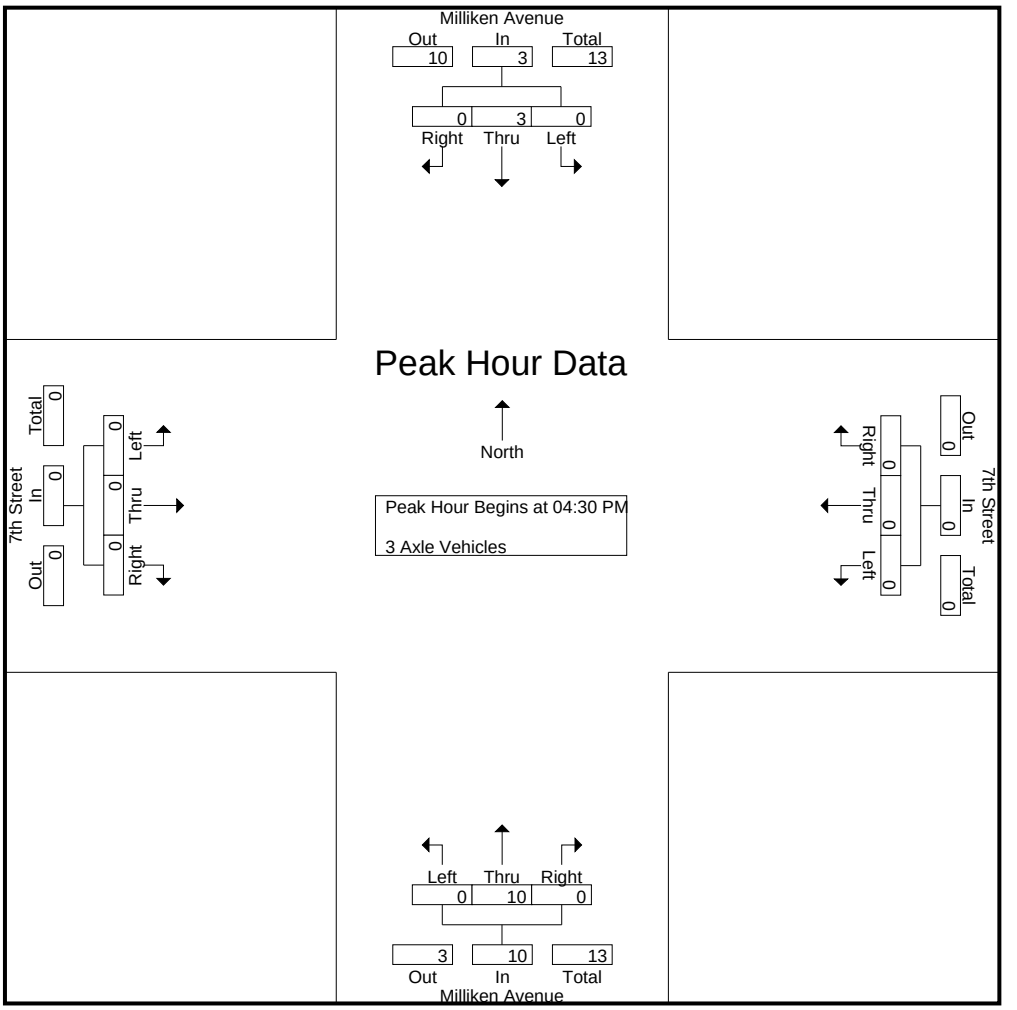

Peak Hour Analysis From 04:30 PM to 05:15 PM - Peak 1 of 1
Peak Hour for Each Approach Begins at:

	04:30 PM				04:30 PM				04:30 PM				04:30 PM			
+0 mins.	0	0	0	0	0	0	0	0	0	**3**	0	**3**	0	0	0	0
+15 mins.	0	**3**	0	**3**	0	0	0	0	0	3	0	3	0	0	0	0
+30 mins.	0	0	0	0	0	0	0	0	0	2	0	2	0	0	0	0
+45 mins.	0	0	0	0	0	0	0	0	0	2	0	2	0	0	0	0
Total Volume	0	3	0	3	0	0	0	0	0	10	0	10	0	0	0	0
% App. Total	0	100	0		0	0	0		0	100	0		0	0	0	
PHF	.000	.250	.000	.250	.000	.000	.000	.000	.000	.833	.000	.833	.000	.000	.000	.000

Counts Unlimited, Inc.
PO Box 1178
Corona, CA 92878
(951)268-6268

City of Rancho Cucamonga
N/S: Milliken Avenue
E/W: 7th Street
Weather: Clear

File Name : 08_RNC_Mil_7th PM
Site Code : 00322818
Start Date : 9/20/2022
Page No : 1

Groups Printed- 4+ Axle Trucks

	Milliken Avenue Southbound				7th Street Westbound				Milliken Avenue Northbound				7th Street Eastbound				
Start Time	Left	Thru	Right	App. Total	Left	Thru	Right	App. Total	Left	Thru	Right	App. Total	Left	Thru	Right	App. Total	Int. Total
04:00 PM	0	7	0	7	0	0	0	0	0	8	0	8	0	0	0	0	15
04:15 PM	0	3	0	3	0	0	1	1	0	7	0	7	0	0	0	0	11
04:30 PM	0	5	0	5	0	0	1	1	0	9	1	10	0	0	0	0	16
04:45 PM	0	6	0	6	0	0	0	0	0	3	0	3	0	0	0	0	9
Total	0	21	0	21	0	0	2	2	0	27	1	28	0	0	0	0	51
05:00 PM	0	11	0	11	0	0	0	0	0	5	0	5	0	0	0	0	16
05:15 PM	0	2	1	3	0	0	0	0	0	2	0	2	0	0	0	0	5
05:30 PM	0	6	0	6	1	0	0	1	0	5	0	5	0	0	0	0	12
05:45 PM	0	1	0	1	0	0	0	0	0	6	0	6	0	0	0	0	7
Total	0	20	1	21	1	0	0	1	0	18	0	18	0	0	0	0	40
Grand Total	0	41	1	42	1	0	2	3	0	45	1	46	0	0	0	0	91
Apprch %	0	97.6	2.4		33.3	0	66.7		0	97.8	2.2		0	0	0		
Total %	0	45.1	1.1	46.2	1.1	0	2.2	3.3	0	49.5	1.1	50.5	0	0	0	0	

	Milliken Avenue Southbound				7th Street Westbound				Milliken Avenue Northbound				7th Street Eastbound				
Start Time	Left	Thru	Right	App. Total	Left	Thru	Right	App. Total	Left	Thru	Right	App. Total	Left	Thru	Right	App. Total	Int. Total
Peak Hour Analysis From 04:30 PM to 05:15 PM - Peak 1 of 1																	
Peak Hour for Entire Intersection Begins at 04:30 PM																	
04:30 PM	0	5	0	5	0	0	**1**	**1**	0	**9**	**1**	**10**	0	0	0	0	**16**
04:45 PM	0	6	0	6	0	0	0	0	0	3	0	3	0	0	0	0	9
05:00 PM	0	**11**	0	**11**	0	0	0	0	0	5	0	5	0	0	0	0	16
05:15 PM	0	2	**1**	3	0	0	0	0	0	2	0	2	0	0	0	0	5
Total Volume	0	24	1	25	0	0	1	1	0	19	1	20	0	0	0	0	46
% App. Total	0	96	4		0	0	100		0	95	5		0	0	0		
PHF	.000	.545	.250	.568	.000	.000	.250	.250	.000	.528	.250	.500	.000	.000	.000	.000	.719

Counts Unlimited, Inc.
PO Box 1178
Corona, CA 92878
(951)268-6268

City of Rancho Cucamonga
N/S: Milliken Avenue
E/W: 7th Street
Weather: Clear

File Name : 08_RNC_Mil_7th PM
Site Code : 00322818
Start Date : 9/20/2022
Page No : 2

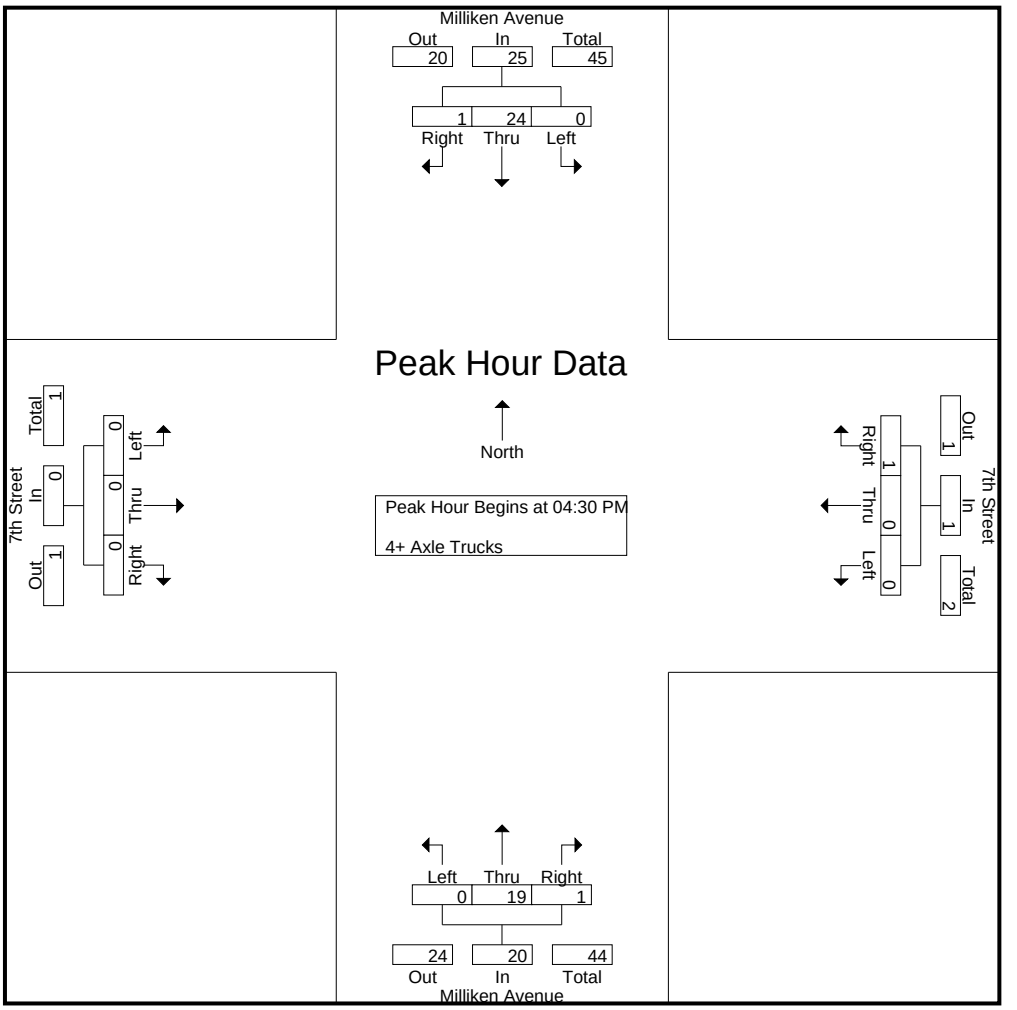

Peak Hour Analysis From 04:30 PM to 05:15 PM - Peak 1 of 1
Peak Hour for Each Approach Begins at:

	04:30 PM				04:30 PM				04:30 PM				04:30 PM			
+0 mins.	0	5	0	5	0	0	**1**	**1**	0	**9**	**1**	**10**	0	0	0	0
+15 mins.	0	6	0	6	0	0	0	0	0	3	0	3	0	0	0	0
+30 mins.	0	**11**	0	**11**	0	0	0	0	0	5	0	5	0	0	0	0
+45 mins.	0	2	**1**	3	0	0	0	0	0	2	0	2	0	0	0	0
Total Volume	0	24	1	25	0	0	1	1	0	19	1	20	0	0	0	0
% App. Total	0	96	4		0	0	100		0	95	5		0	0	0	
PHF	.000	.545	.250	.568	.000	.000	.250	.250	.000	.528	.250	.500	.000	.000	.000	.000

Location: Rancho Cucamonga
N/S: Milliken Avenue
E/W: 7th Street

Date: 9/20/2022
Day: Tuesday

PEDESTRIANS

	North Leg Milliken Avenue	East Leg 7th Street	South Leg Milliken Avenue	West Leg 7th Street	
	Pedestrians	Pedestrians	Pedestrians	Pedestrians	
7:00 AM	0	0	0	0	0
7:15 AM	0	1	0	1	2
7:30 AM	0	1	0	0	1
7:45 AM	0	0	0	0	0
8:00 AM	0	0	0	0	0
8:15 AM	0	0	0	0	0
8:30 AM	0	0	0	0	0
8:45 AM	0	0	0	0	0
TOTAL VOLUMES:	0	2	0	1	3

	North Leg Milliken Avenue	East Leg 7th Street	South Leg Milliken Avenue	West Leg 7th Street	
	Pedestrians	Pedestrians	Pedestrians	Pedestrians	
4:00 PM	0	0	0	1	1
4:15 PM	0	0	0	0	0
4:30 PM	0	0	0	3	3
4:45 PM	0	0	0	1	1
5:00 PM	0	0	0	1	1
5:15 PM	0	0	0	0	0
5:30 PM	0	0	0	0	0
5:45 PM	0	0	0	1	1
TOTAL VOLUMES:	0	0	0	7	7

Counts Unlimited, Inc.
PO Box 1178
Corona, CA 92878
951-268-6268

Location: Rancho Cucamonga
N/S: Milliken Avenue
E/W: 7th Street

Date: 9/20/2022
Day: Tuesday

BICYCLES

	Southbound Milliken Avenue			Westbound 7th Street			Northbound Milliken Avenue			Eastbound 7th Street			
	Left	Thru	Right	Left	Thru	Right	Left	Thru	Right	Left	Thru	Right	
7:00 AM	0	1	0	0	0	0	0	0	0	0	0	0	1
7:15 AM	0	0	0	0	0	0	0	0	0	0	0	0	0
7:30 AM	0	0	0	0	0	0	1	0	0	0	0	0	1
7:45 AM	0	0	0	0	0	0	0	0	0	0	0	1	1
8:00 AM	0	0	0	0	0	0	0	0	0	0	0	1	1
8:15 AM	0	1	0	0	0	0	0	0	0	0	0	0	1
8:30 AM	0	1	0	0	0	0	0	0	0	0	0	0	1
8:45 AM	0	0	0	0	0	0	0	0	0	0	0	0	0
TOTAL VOLUMES:	0	3	0	0	0	0	1	0	0	0	0	2	6

	Southbound Milliken Avenue			Westbound 7th Street			Northbound Milliken Avenue			Eastbound 7th Street			
	Left	Thru	Right	Left	Thru	Right	Left	Thru	Right	Left	Thru	Right	
4:00 PM	0	0	0	0	0	0	0	1	0	0	0	0	1
4:15 PM	0	0	0	0	0	0	0	1	0	0	0	0	1
4:30 PM	0	0	0	0	0	0	0	0	0	0	0	0	0
4:45 PM	0	0	0	0	0	0	0	3	0	0	0	0	3
5:00 PM	0	0	0	0	0	0	0	0	0	0	0	0	0
5:15 PM	0	0	0	0	0	0	0	0	0	0	0	0	0
5:30 PM	0	0	0	0	0	0	0	0	0	0	0	0	0
5:45 PM	0	0	0	0	0	0	0	0	0	0	0	0	0
TOTAL VOLUMES:	0	0	0	0	0	0	0	5	0	0	0	0	5

Counts Unlimited, Inc.
PO Box 1178
Corona, CA 92878
951-268-6268

APPENDIX C2

Counts Unlimited, Inc.
PO Box 1178
Corona, CA 92878
(951)268-6268

City of Ontario
N/S: Terminal Way West
E/W: Airport Drive
Weather: Clear

File Name : 01_ONT_Term W_AP AM
Site Code : 00322818
Start Date : 9/20/2022
Page No : 1

Groups Printed- Passenger Vehicles - Large 2 Axle Vehicles - 3 Axle Vehicles - 4+ Axle Trucks

	Airport Drive Westbound			Terminal Way West Northbound			Airport Drive Eastbound			
Start Time	Left	Thru	App. Total	Left	Right	App. Total	Thru	Right	App. Total	Int. Total
07:00 AM	10	130	140	8	3	11	117	12	129	280
07:15 AM	9	161	170	4	1	5	121	23	144	319
07:30 AM	9	155	164	4	4	8	197	16	213	385
07:45 AM	12	184	196	5	5	10	208	14	222	428
Total	40	630	670	21	13	34	643	65	708	1412
08:00 AM	16	168	184	9	0	9	171	20	191	384
08:15 AM	16	150	166	9	2	11	156	18	174	351
08:30 AM	20	123	143	7	6	13	135	21	156	312
08:45 AM	14	106	120	14	7	21	137	13	150	291
Total	66	547	613	39	15	54	599	72	671	1338
Grand Total	106	1177	1283	60	28	88	1242	137	1379	2750
Apprch %	8.3	91.7		68.2	31.8		90.1	9.9		
Total %	3.9	42.8	46.7	2.2	1	3.2	45.2	5	50.1	
Passenger Vehicles	75	1117	1192	58	28	86	1181	128	1309	2587
% Passenger Vehicles	70.8	94.9	92.9	96.7	100	97.7	95.1	93.4	94.9	94.1
Large 2 Axle Vehicles	28	33	61	1	0	1	33	9	42	104
% Large 2 Axle Vehicles	26.4	2.8	4.8	1.7	0	1.1	2.7	6.6	3	3.8
3 Axle Vehicles	2	8	10	0	0	0	13	0	13	23
% 3 Axle Vehicles	1.9	0.7	0.8	0	0	0	1	0	0.9	0.8
4+ Axle Trucks	1	19	20	1	0	1	15	0	15	36
% 4+ Axle Trucks	0.9	1.6	1.6	1.7	0	1.1	1.2	0	1.1	1.3

	Airport Drive Westbound			Terminal Way West Northbound			Airport Drive Eastbound			
Start Time	Left	Thru	App. Total	Left	Right	App. Total	Thru	Right	App. Total	Int. Total
Peak Hour Analysis From 07:00 AM to 08:45 AM - Peak 1 of 1										
Peak Hour for Entire Intersection Begins at 07:30 AM										
07:30 AM	9	155	164	4	4	8	197	16	213	385
07:45 AM	12	**184**	**196**	5	**5**	10	**208**	14	**222**	**428**
08:00 AM	**16**	168	184	**9**	0	9	171	**20**	191	384
08:15 AM	16	150	166	9	2	**11**	156	18	174	351
Total Volume	53	657	710	27	11	38	732	68	800	1548
% App. Total	7.5	92.5		71.1	28.9		91.5	8.5		
PHF	.828	.893	.906	.750	.550	.864	.880	.850	.901	.904

Counts Unlimited, Inc.
PO Box 1178
Corona, CA 92878
(951)268-6268

City of Ontario
N/S: Terminal Way West
E/W: Airport Drive
Weather: Clear

File Name : 01_ONT_Term W_AP AM
Site Code : 00322818
Start Date : 9/20/2022
Page No : 2

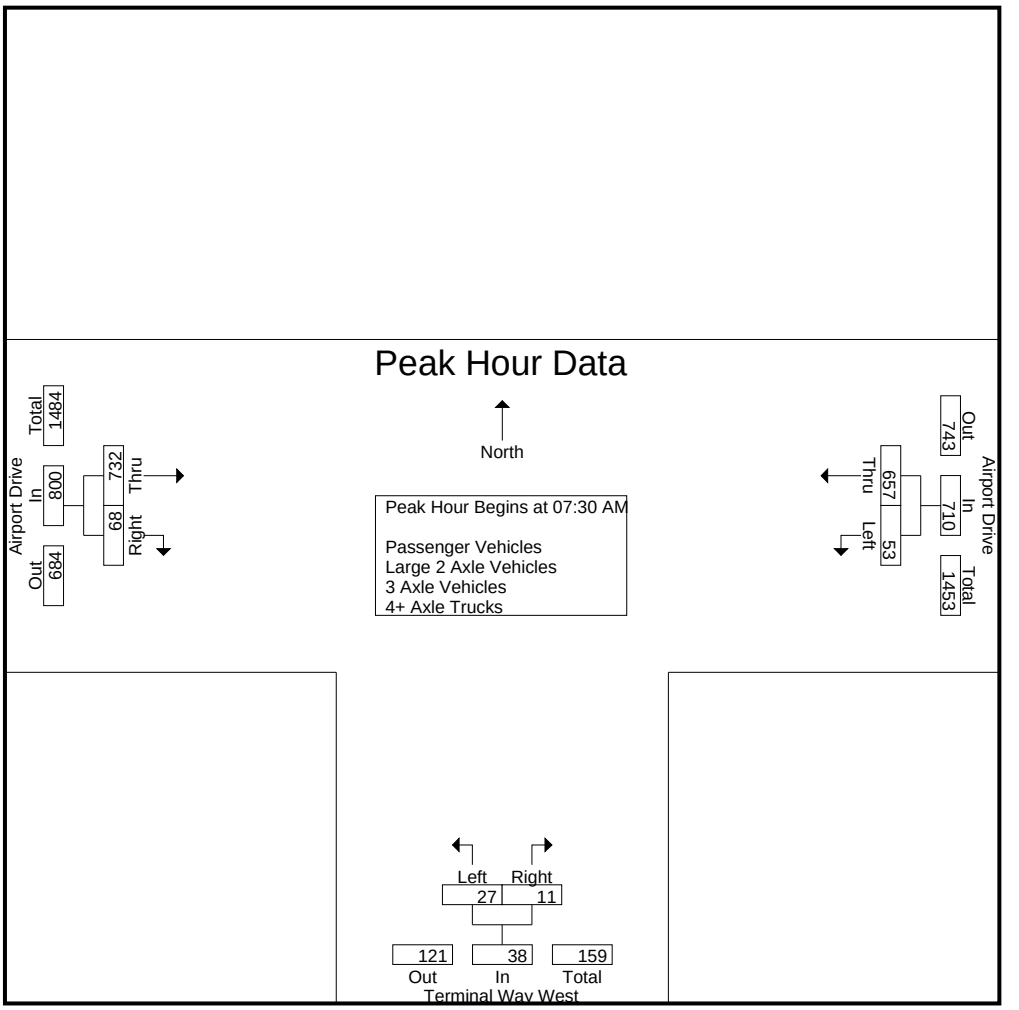

Peak Hour Analysis From 07:00 AM to 08:45 AM - Peak 1 of 1
Peak Hour for Each Approach Begins at:

	07:15 AM			08:00 AM			07:30 AM		
+0 mins.	9	161	170	9	0	9	197	16	213
+15 mins.	9	155	164	9	2	11	**208**	14	**222**
+30 mins.	12	**184**	**196**	7	6	13	171	**20**	191
+45 mins.	**16**	168	184	**14**	**7**	**21**	156	18	174
Total Volume	46	668	714	39	15	54	732	68	800
% App. Total	6.4	93.6		72.2	27.8		91.5	8.5	
PHF	.719	.908	.911	.696	.536	.643	.880	.850	.901

Counts Unlimited, Inc.
PO Box 1178
Corona, CA 92878
(951)268-6268

City of Ontario
N/S: Terminal Way West
E/W: Airport Drive
Weather: Clear

File Name : 01_ONT_Term W_AP AM
Site Code : 00322818
Start Date : 9/20/2022
Page No : 1

Groups Printed- Passenger Vehicles

	Airport Drive Westbound			Terminal Way West Northbound			Airport Drive Eastbound			
Start Time	Left	Thru	App. Total	Left	Right	App. Total	Thru	Right	App. Total	Int. Total
07:00 AM	5	126	131	7	3	10	108	12	120	261
07:15 AM	6	154	160	4	1	5	114	21	135	300
07:30 AM	5	148	153	4	4	8	192	15	207	368
07:45 AM	8	176	184	5	5	10	198	14	212	406
Total	24	604	628	20	13	33	612	62	674	1335
08:00 AM	10	161	171	9	0	9	165	18	183	363
08:15 AM	12	140	152	8	2	10	152	17	169	331
08:30 AM	16	116	132	7	6	13	127	20	147	292
08:45 AM	13	96	109	14	7	21	125	11	136	266
Total	51	513	564	38	15	53	569	66	635	1252
Grand Total	75	1117	1192	58	28	86	1181	128	1309	2587
Apprch %	6.3	93.7		67.4	32.6		90.2	9.8		
Total %	2.9	43.2	46.1	2.2	1.1	3.3	45.7	4.9	50.6	

	Airport Drive Westbound			Terminal Way West Northbound			Airport Drive Eastbound			
Start Time	Left	Thru	App. Total	Left	Right	App. Total	Thru	Right	App. Total	Int. Total
Peak Hour Analysis From 07:30 AM to 08:15 AM - Peak 1 of 1										
Peak Hour for Entire Intersection Begins at 07:30 AM										
07:30 AM	5	148	153	4	4	8	192	15	207	368
07:45 AM	8	**176**	**184**	5	**5**	**10**	**198**	14	**212**	**406**
08:00 AM	10	161	171	**9**	0	9	165	**18**	183	363
08:15 AM	**12**	140	152	8	2	10	152	17	169	331
Total Volume	35	625	660	26	11	37	707	64	771	1468
% App. Total	5.3	94.7		70.3	29.7		91.7	8.3		
PHF	.729	.888	.897	.722	.550	.925	.893	.889	.909	.904

Counts Unlimited, Inc.
PO Box 1178
Corona, CA 92878
(951)268-6268

City of Ontario
N/S: Terminal Way West
E/W: Airport Drive
Weather: Clear

File Name : 01_ONT_Term W_AP AM
Site Code : 00322818
Start Date : 9/20/2022

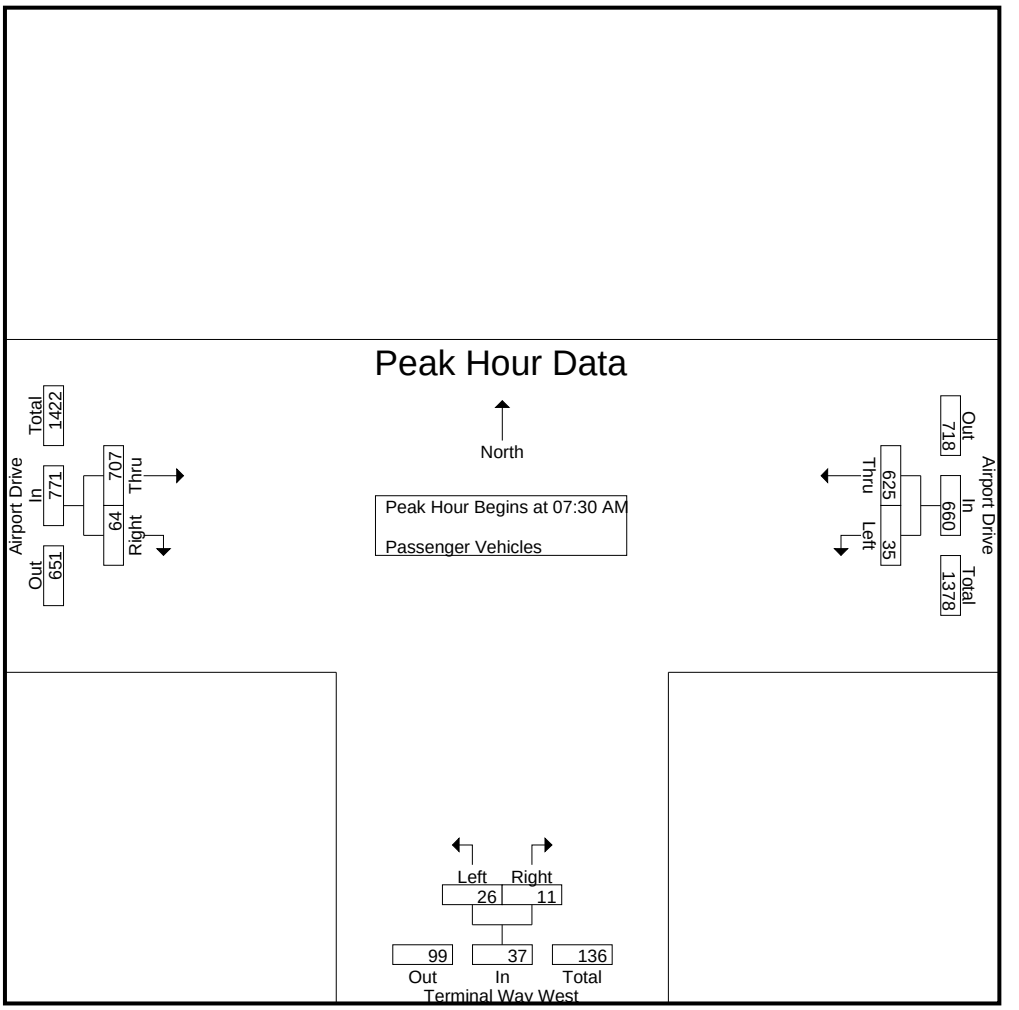

Peak Hour Analysis From 07:30 AM to 08:15 AM - Peak 1 of 1
Peak Hour for Each Approach Begins at:

	07:30 AM			07:30 AM			07:30 AM		
+0 mins.	5	148	153	4	4	8	192	15	207
+15 mins.	8	**176**	**184**	5	**5**	**10**	**198**	14	**212**
+30 mins.	10	161	171	**9**	0	9	165	**18**	183
+45 mins.	**12**	140	152	8	2	10	152	17	169
Total Volume	35	625	660	26	11	37	707	64	771
% App. Total	5.3	94.7		70.3	29.7		91.7	8.3	
PHF	.729	.888	.897	.722	.550	.925	.893	.889	.909

Counts Unlimited, Inc.
PO Box 1178
Corona, CA 92878
(951)268-6268

City of Ontario
N/S: Terminal Way West
E/W: Airport Drive
Weather: Clear

File Name : 01_ONT_Term W_AP AM
Site Code : 00322818
Start Date : 9/20/2022
Page No : 1

Groups Printed- Large 2 Axle Vehicles

	Airport Drive Westbound			Terminal Way West Northbound			Airport Drive Eastbound			
Start Time	Left	Thru	App. Total	Left	Right	App. Total	Thru	Right	App. Total	Int. Total
07:00 AM	4	3	7	1	0	1	8	0	8	16
07:15 AM	3	6	9	0	0	0	4	2	6	15
07:30 AM	4	5	9	0	0	0	3	1	4	13
07:45 AM	4	3	7	0	0	0	7	0	7	14
Total	15	17	32	1	0	1	22	3	25	58
08:00 AM	4	4	8	0	0	0	5	2	7	15
08:15 AM	4	7	11	0	0	0	2	1	3	14
08:30 AM	4	1	5	0	0	0	2	1	3	8
08:45 AM	1	4	5	0	0	0	2	2	4	9
Total	13	16	29	0	0	0	11	6	17	46
Grand Total	28	33	61	1	0	1	33	9	42	104
Apprch %	45.9	54.1		100	0		78.6	21.4		
Total %	26.9	31.7	58.7	1	0	1	31.7	8.7	40.4	

	Airport Drive Westbound			Terminal Way West Northbound			Airport Drive Eastbound			
Start Time	Left	Thru	App. Total	Left	Right	App. Total	Thru	Right	App. Total	Int. Total
Peak Hour Analysis From 07:30 AM to 08:15 AM - Peak 1 of 1										
Peak Hour for Entire Intersection Begins at 07:30 AM										
07:30 AM	**4**	5	9	0	0	0	3	1	4	13
07:45 AM	4	3	7	0	0	0	**7**	0	**7**	14
08:00 AM	4	4	8	0	0	0	5	**2**	7	**15**
08:15 AM	4	**7**	**11**	0	0	0	2	1	3	14
Total Volume	16	19	35	0	0	0	17	4	21	56
% App. Total	45.7	54.3		0	0		81	19		
PHF	1.00	.679	.795	.000	.000	.000	.607	.500	.750	.933

Counts Unlimited, Inc.
PO Box 1178
Corona, CA 92878
(951)268-6268

City of Ontario
N/S: Terminal Way West
E/W: Airport Drive
Weather: Clear

File Name : 01_ONT_Term W_AP AM
Site Code : 00322818
Start Date : 9/20/2022
Page No : 2

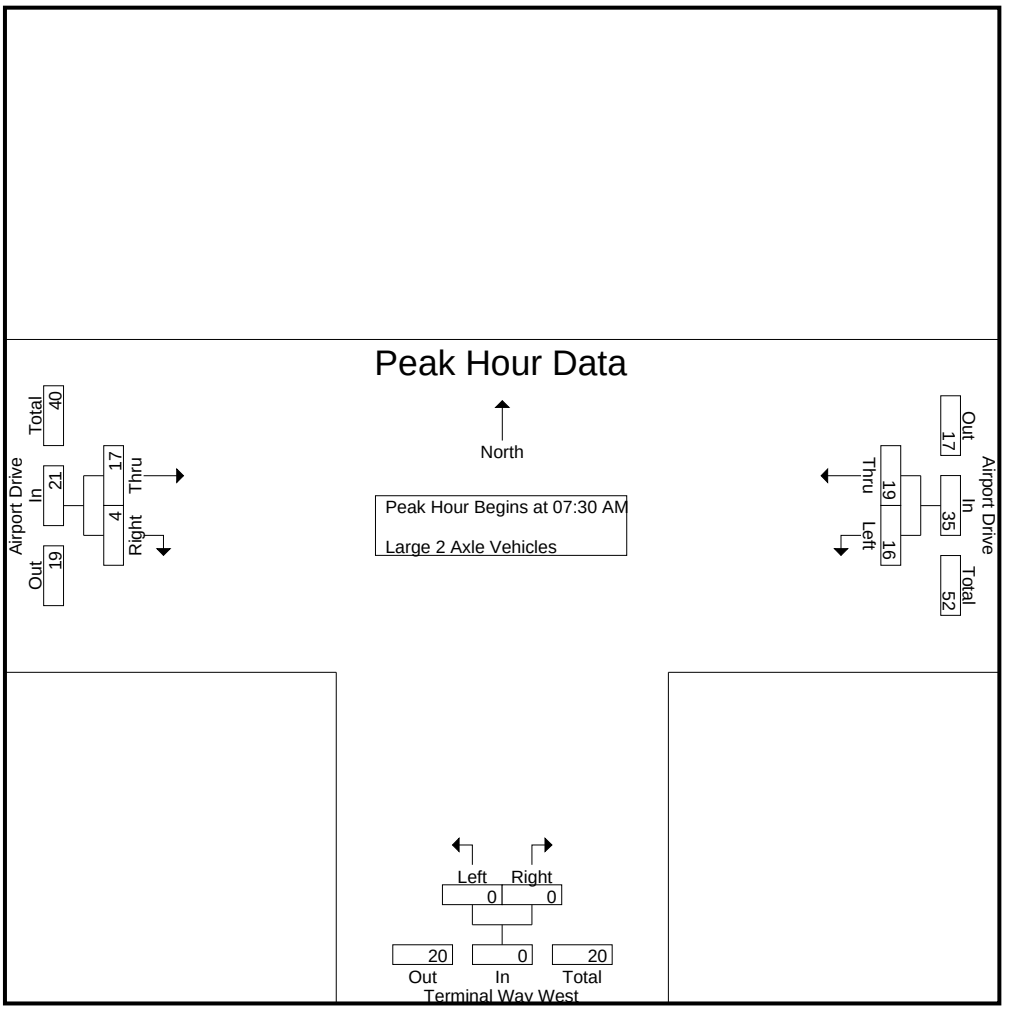

Peak Hour Analysis From 07:30 AM to 08:15 AM - Peak 1 of 1
Peak Hour for Each Approach Begins at:

	07:30 AM			07:30 AM			07:30 AM		
+0 mins.	**4**	5	9	0	0	0	3	1	4
+15 mins.	4	3	7	0	0	0	**7**	0	**7**
+30 mins.	4	4	8	0	0	0	5	**2**	7
+45 mins.	4	**7**	**11**	0	0	0	2	1	3
Total Volume	16	19	35	0	0	0	17	4	21
% App. Total	45.7	54.3		0	0		81	19	
PHF	1.000	.679	.795	.000	.000	.000	.607	.500	.750

Counts Unlimited, Inc.
PO Box 1178
Corona, CA 92878
(951)268-6268

City of Ontario
N/S: Terminal Way West
E/W: Airport Drive
Weather: Clear

File Name : 01_ONT_Term W_AP AM
Site Code : 00322818
Start Date : 9/20/2022
Page No : 1

Groups Printed- 3 Axle Vehicles

	Airport Drive Westbound			Terminal Way West Northbound			Airport Drive Eastbound			
Start Time	Left	Thru	App. Total	Left	Right	App. Total	Thru	Right	App. Total	Int. Total
07:00 AM	1	0	1	0	0	0	1	0	1	2
07:15 AM	0	1	1	0	0	0	2	0	2	3
07:30 AM	0	1	1	0	0	0	2	0	2	3
07:45 AM	0	1	1	0	0	0	2	0	2	3
Total	1	3	4	0	0	0	7	0	7	11
08:00 AM	1	0	1	0	0	0	0	0	0	1
08:15 AM	0	1	1	0	0	0	1	0	1	2
08:30 AM	0	2	2	0	0	0	1	0	1	3
08:45 AM	0	2	2	0	0	0	4	0	4	6
Total	1	5	6	0	0	0	6	0	6	12
Grand Total	2	8	10	0	0	0	13	0	13	23
Apprch %	20	80		0	0		100	0		
Total %	8.7	34.8	43.5	0	0	0	56.5	0	56.5	

	Airport Drive Westbound			Terminal Way West Northbound			Airport Drive Eastbound			
Start Time	Left	Thru	App. Total	Left	Right	App. Total	Thru	Right	App. Total	Int. Total
Peak Hour Analysis From 07:30 AM to 08:15 AM - Peak 1 of 1										
Peak Hour for Entire Intersection Begins at 07:30 AM										
07:30 AM	0	**1**	**1**	0	0	0	**2**	0	**2**	**3**
07:45 AM	0	1	1	0	0	0	2	0	2	3
08:00 AM	**1**	0	1	0	0	0	0	0	0	1
08:15 AM	0	1	1	0	0	0	1	0	1	2
Total Volume	1	3	4	0	0	0	5	0	5	9
% App. Total	25	75		0	0		100	0		
PHF	.250	.750	1.00	.000	.000	.000	.625	.000	.625	.750

Counts Unlimited, Inc.
PO Box 1178
Corona, CA 92878
(951)268-6268

City of Ontario
N/S: Terminal Way West
E/W: Airport Drive
Weather: Clear

File Name : 01_ONT_Term W_AP AM
Site Code : 00322818
Start Date : 9/20/2022

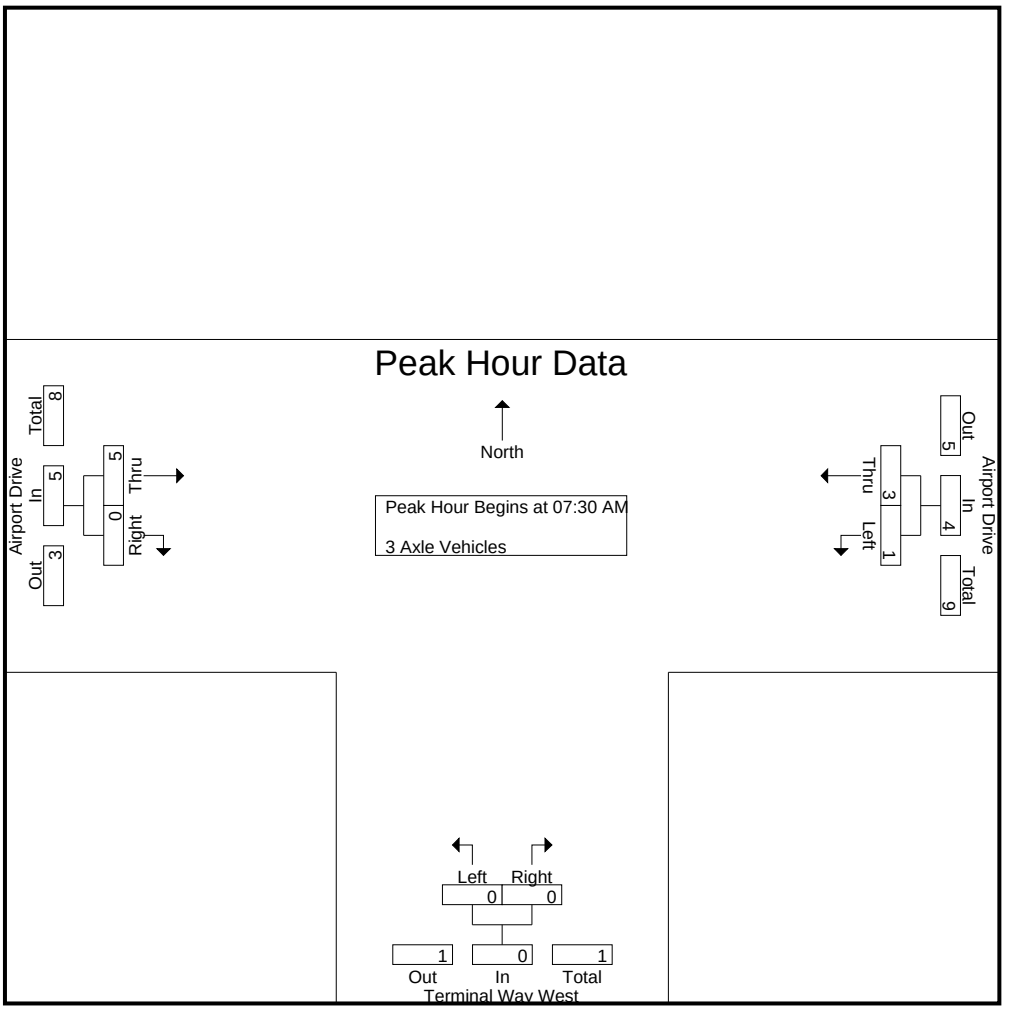

Peak Hour Analysis From 07:30 AM to 08:15 AM - Peak 1 of 1
Peak Hour for Each Approach Begins at:

	07:30 AM			07:30 AM			07:30 AM		
+0 mins.	0	**1**	**1**	0	0	0	**2**	0	**2**
+15 mins.	0	1	1	0	0	0	2	0	2
+30 mins.	**1**	0	1	0	0	0	0	0	0
+45 mins.	0	1	1	0	0	0	1	0	1
Total Volume	1	3	4	0	0	0	5	0	5
% App. Total	25	75		0	0		100	0	
PHF	.250	.750	1.000	.000	.000	.000	.625	.000	.625

Counts Unlimited, Inc.
PO Box 1178
Corona, CA 92878
(951)268-6268

City of Ontario
N/S: Terminal Way West
E/W: Airport Drive
Weather: Clear

File Name : 01_ONT_Term W_AP AM
Site Code : 00322818
Start Date : 9/20/2022
Page No : 1

Groups Printed- 4+ Axle Trucks

	Airport Drive Westbound			Terminal Way West Northbound			Airport Drive Eastbound			
Start Time	Left	Thru	App. Total	Left	Right	App. Total	Thru	Right	App. Total	Int. Total
07:00 AM	0	1	1	0	0	0	0	0	0	1
07:15 AM	0	0	0	0	0	0	1	0	1	1
07:30 AM	0	1	1	0	0	0	0	0	0	1
07:45 AM	0	4	4	0	0	0	1	0	1	5
Total	0	6	6	0	0	0	2	0	2	8
08:00 AM	1	3	4	0	0	0	1	0	1	5
08:15 AM	0	2	2	1	0	1	1	0	1	4
08:30 AM	0	4	4	0	0	0	5	0	5	9
08:45 AM	0	4	4	0	0	0	6	0	6	10
Total	1	13	14	1	0	1	13	0	13	28
Grand Total	1	19	20	1	0	1	15	0	15	36
Apprch %	5	95		100	0		100	0		
Total %	2.8	52.8	55.6	2.8	0	2.8	41.7	0	41.7	

	Airport Drive Westbound			Terminal Way West Northbound			Airport Drive Eastbound			
Start Time	Left	Thru	App. Total	Left	Right	App. Total	Thru	Right	App. Total	Int. Total
Peak Hour Analysis From 07:30 AM to 08:15 AM - Peak 1 of 1										
Peak Hour for Entire Intersection Begins at 07:30 AM										
07:30 AM	0	1	1	0	0	0	0	0	0	1
07:45 AM	0	**4**	**4**	0	0	0	**1**	0	**1**	**5**
08:00 AM	**1**	3	4	0	0	0	1	0	1	5
08:15 AM	0	2	2	**1**	0	**1**	1	0	1	4
Total Volume	1	10	11	1	0	1	3	0	3	15
% App. Total	9.1	90.9		100	0		100	0		
PHF	.250	.625	.688	.250	.000	.250	.750	.000	.750	.750

Counts Unlimited, Inc.
PO Box 1178
Corona, CA 92878
(951)268-6268

City of Ontario
N/S: Terminal Way West
E/W: Airport Drive
Weather: Clear

File Name : 01_ONT_Term W_AP AM
Site Code : 00322818
Start Date : 9/20/2022
Page No : 2

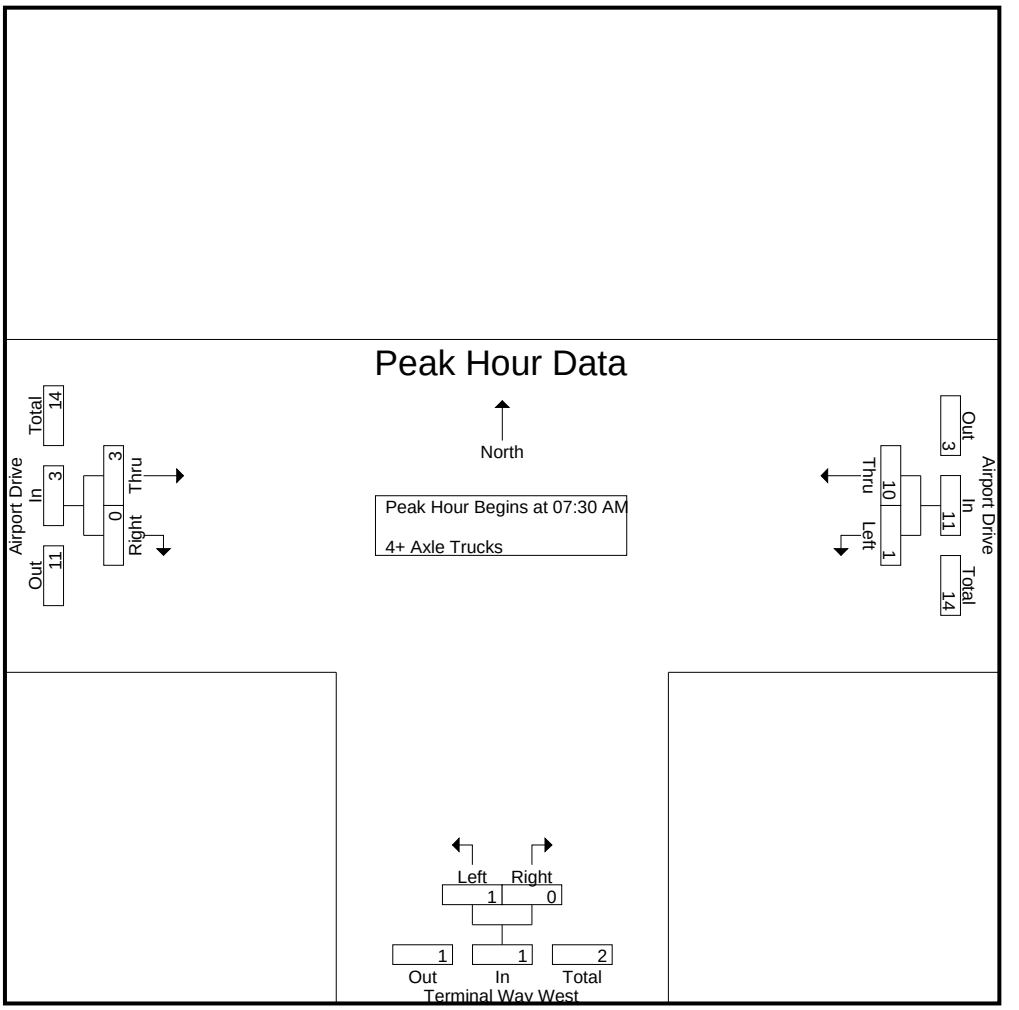

Peak Hour Analysis From 07:30 AM to 08:15 AM - Peak 1 of 1
Peak Hour for Each Approach Begins at:

	07:30 AM			07:30 AM			07:30 AM		
+0 mins.	0	1	1	0	0	0	0	0	0
+15 mins.	0	**4**	**4**	0	0	0	**1**	0	**1**
+30 mins.	**1**	3	4	0	0	0	1	0	1
+45 mins.	0	2	2	**1**	0	**1**	1	0	1
Total Volume	1	10	11	1	0	1	3	0	3
% App. Total	9.1	90.9		100	0		100	0	
PHF	.250	.625	.688	.250	.000	.250	.750	.000	.750

Counts Unlimited, Inc.
PO Box 1178
Corona, CA 92878
(951)268-6268

City of Ontario
N/S: Terminal Way West
E/W: Airport Drive
Weather: Clear

File Name : 01_ONT_Term W_AP PM
Site Code : 00322818
Start Date : 9/20/2022
Page No : 1

Groups Printed- Passenger Vehicles - Large 2 Axle Vehicles - 3 Axle Vehicles - 4+ Axle Trucks

	Airport Drive Westbound			Terminal Way West Northbound			Airport Drive Eastbound			
Start Time	Left	Thru	App. Total	Left	Right	App. Total	Thru	Right	App. Total	Int. Total
04:00 PM	8	168	176	3	3	6	338	21	359	541
04:15 PM	12	194	206	5	7	12	355	34	389	607
04:30 PM	18	173	191	8	15	23	366	28	394	608
04:45 PM	15	175	190	13	10	23	319	21	340	553
Total	53	710	763	29	35	64	1378	104	1482	2309
05:00 PM	12	198	210	10	4	14	312	21	333	557
05:15 PM	11	191	202	8	6	14	310	19	329	545
05:30 PM	11	138	149	5	3	8	327	16	343	500
05:45 PM	7	143	150	7	2	9	269	22	291	450
Total	41	670	711	30	15	45	1218	78	1296	2052
Grand Total	94	1380	1474	59	50	109	2596	182	2778	4361
Apprch %	6.4	93.6		54.1	45.9		93.4	6.6		
Total %	2.2	31.6	33.8	1.4	1.1	2.5	59.5	4.2	63.7	
Passenger Vehicles	77	1291	1368	59	50	109	2464	172	2636	4113
% Passenger Vehicles	81.9	93.6	92.8	100	100	100	94.9	94.5	94.9	94.3
Large 2 Axle Vehicles	17	55	72	0	0	0	67	10	77	149
% Large 2 Axle Vehicles	18.1	4	4.9	0	0	0	2.6	5.5	2.8	3.4
3 Axle Vehicles	0	14	14	0	0	0	23	0	23	37
% 3 Axle Vehicles	0	1	0.9	0	0	0	0.9	0	0.8	0.8
4+ Axle Trucks	0	20	20	0	0	0	42	0	42	62
% 4+ Axle Trucks	0	1.4	1.4	0	0	0	1.6	0	1.5	1.4

	Airport Drive Westbound			Terminal Way West Northbound			Airport Drive Eastbound			
Start Time	Left	Thru	App. Total	Left	Right	App. Total	Thru	Right	App. Total	Int. Total
Peak Hour Analysis From 04:00 PM to 05:45 PM - Peak 1 of 1										
Peak Hour for Entire Intersection Begins at 04:15 PM										
04:15 PM	12	194	206	5	7	12	355	**34**	389	607
04:30 PM	**18**	173	191	8	**15**	**23**	**366**	28	**394**	**608**
04:45 PM	15	175	190	**13**	10	23	319	21	340	553
05:00 PM	12	**198**	**210**	10	4	14	312	21	333	557
Total Volume	57	740	797	36	36	72	1352	104	1456	2325
% App. Total	7.2	92.8		50	50		92.9	7.1		
PHF	.792	.934	.949	.692	.600	.783	.923	.765	.924	.956

Counts Unlimited, Inc.
PO Box 1178
Corona, CA 92878
(951)268-6268

City of Ontario
N/S: Terminal Way West
E/W: Airport Drive
Weather: Clear

File Name : 01_ONT_Term W_AP PM
Site Code : 00322818
Start Date : 9/20/2022

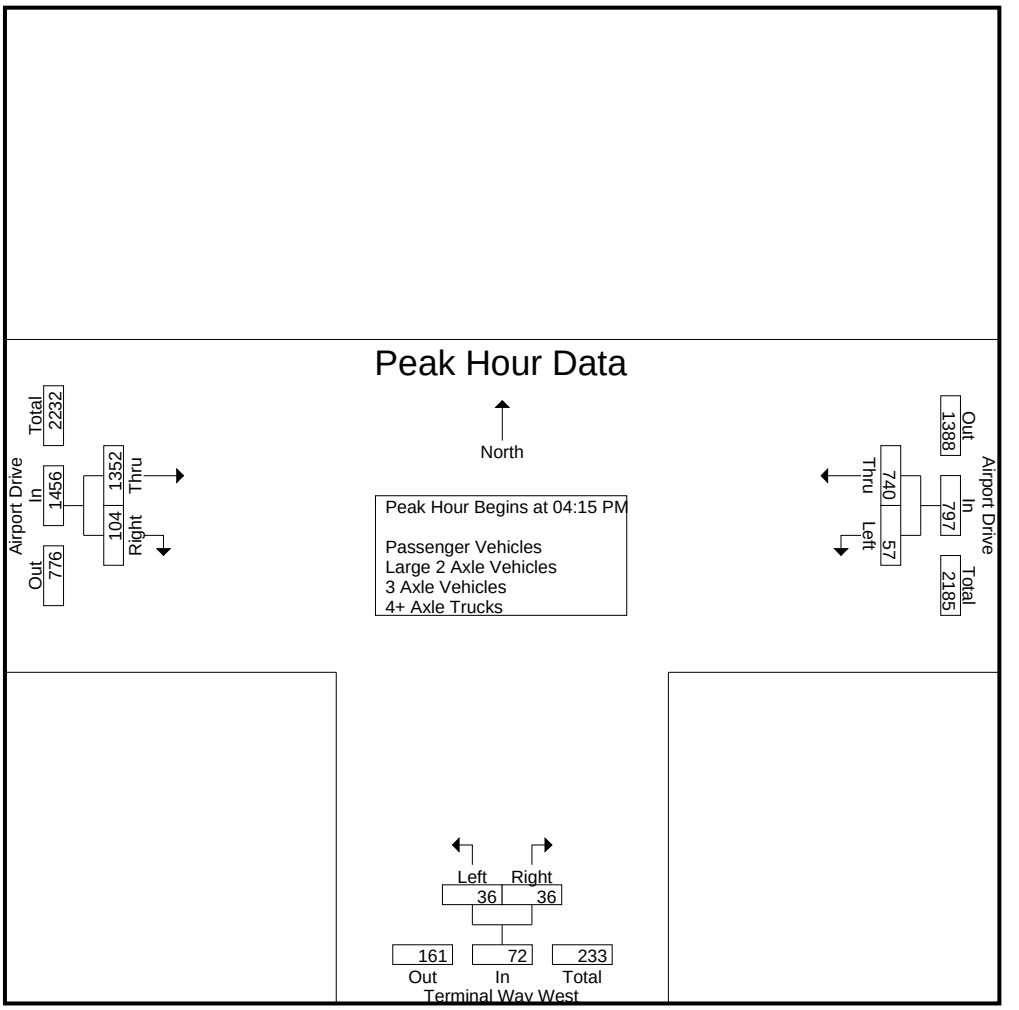

Peak Hour Analysis From 04:00 PM to 05:45 PM - Peak 1 of 1
Peak Hour for Each Approach Begins at:

	04:15 PM			04:30 PM			04:00 PM		
+0 mins.	12	194	206	8	**15**	**23**	338	21	359
+15 mins.	**18**	173	191	**13**	10	23	355	**34**	389
+30 mins.	15	175	190	10	4	14	**366**	28	**394**
+45 mins.	12	**198**	**210**	8	6	14	319	21	340
Total Volume	57	740	797	39	35	74	1378	104	1482
% App. Total	7.2	92.8		52.7	47.3		93	7	
PHF	.792	.934	.949	.750	.583	.804	.941	.765	.940

Counts Unlimited, Inc.
PO Box 1178
Corona, CA 92878
(951)268-6268

City of Ontario
N/S: Terminal Way West
E/W: Airport Drive
Weather: Clear

File Name : 01_ONT_Term W_AP PM
Site Code : 00322818
Start Date : 9/20/2022
Page No : 1

Groups Printed- Passenger Vehicles

	Airport Drive Westbound			Terminal Way West Northbound			Airport Drive Eastbound			
Start Time	Left	Thru	App. Total	Left	Right	App. Total	Thru	Right	App. Total	Int. Total
04:00 PM	8	160	168	3	3	6	328	20	348	522
04:15 PM	11	180	191	5	7	12	329	32	361	564
04:30 PM	14	163	177	8	15	23	342	25	367	567
04:45 PM	13	164	177	13	10	23	302	21	323	523
Total	46	667	713	29	35	64	1301	98	1399	2176
05:00 PM	9	183	192	10	4	14	298	20	318	524
05:15 PM	8	183	191	8	6	14	301	17	318	523
05:30 PM	8	129	137	5	3	8	311	15	326	471
05:45 PM	6	129	135	7	2	9	253	22	275	419
Total	31	624	655	30	15	45	1163	74	1237	1937
Grand Total	77	1291	1368	59	50	109	2464	172	2636	4113
Apprch %	5.6	94.4		54.1	45.9		93.5	6.5		
Total %	1.9	31.4	33.3	1.4	1.2	2.7	59.9	4.2	64.1	

	Airport Drive Westbound			Terminal Way West Northbound			Airport Drive Eastbound			
Start Time	Left	Thru	App. Total	Left	Right	App. Total	Thru	Right	App. Total	Int. Total
Peak Hour Analysis From 04:15 PM to 05:00 PM - Peak 1 of 1										
Peak Hour for Entire Intersection Begins at 04:15 PM										
04:15 PM	11	180	191	5	7	12	329	**32**	361	564
04:30 PM	**14**	163	177	8	**15**	**23**	**342**	25	**367**	**567**
04:45 PM	13	164	177	**13**	10	23	302	21	323	523
05:00 PM	9	**183**	**192**	10	4	14	298	20	318	524
Total Volume	47	690	737	36	36	72	1271	98	1369	2178
% App. Total	6.4	93.6		50	50		92.8	7.2		
PHF	.839	.943	.960	.692	.600	.783	.929	.766	.933	.960

Counts Unlimited, Inc.
PO Box 1178
Corona, CA 92878
(951)268-6268

City of Ontario
N/S: Terminal Way West
E/W: Airport Drive
Weather: Clear

File Name : 01_ONT_Term W_AP PM
Site Code : 00322818
Start Date : 9/20/2022

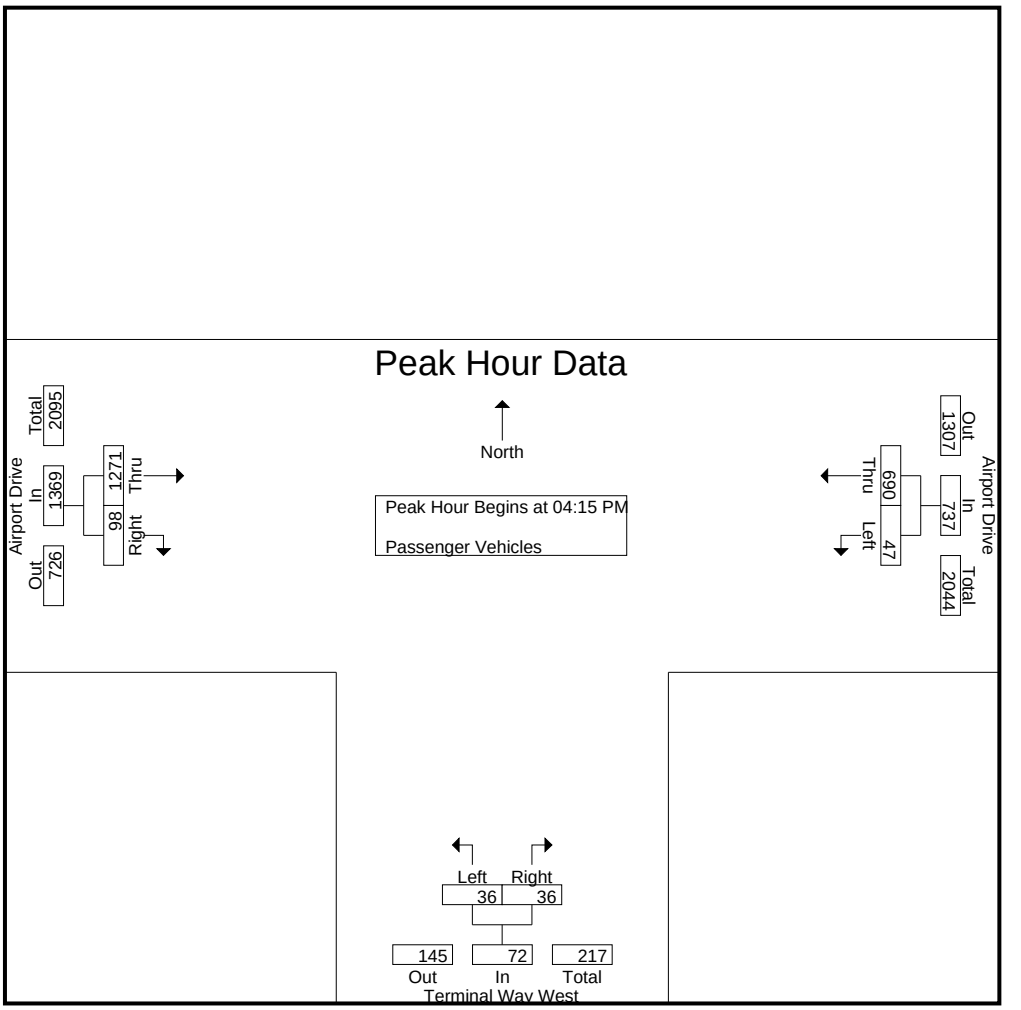

Peak Hour Analysis From 04:15 PM to 05:00 PM - Peak 1 of 1
Peak Hour for Each Approach Begins at:

	04:15 PM			04:15 PM			04:15 PM		
+0 mins.	11	180	191	5	7	12	329	**32**	361
+15 mins.	**14**	163	177	8	**15**	**23**	**342**	25	**367**
+30 mins.	13	164	177	**13**	10	23	302	21	323
+45 mins.	9	**183**	**192**	10	4	14	298	20	318
Total Volume	47	690	737	36	36	72	1271	98	1369
% App. Total	6.4	93.6		50	50		92.8	7.2	
PHF	.839	.943	.960	.692	.600	.783	.929	.766	.933

Counts Unlimited, Inc.
PO Box 1178
Corona, CA 92878
(951)268-6268

City of Ontario
N/S: Terminal Way West
E/W: Airport Drive
Weather: Clear

File Name : 01_ONT_Term W_AP PM
Site Code : 00322818
Start Date : 9/20/2022
Page No : 1

Groups Printed- Large 2 Axle Vehicles

	Airport Drive Westbound			Terminal Way West Northbound			Airport Drive Eastbound			
Start Time	Left	Thru	App. Total	Left	Right	App. Total	Thru	Right	App. Total	Int. Total
04:00 PM	0	5	5	0	0	0	4	1	5	10
04:15 PM	1	6	7	0	0	0	14	2	16	23
04:30 PM	4	4	8	0	0	0	11	3	14	22
04:45 PM	2	6	8	0	0	0	6	0	6	14
Total	7	21	28	0	0	0	35	6	41	69
05:00 PM	3	10	13	0	0	0	6	1	7	20
05:15 PM	3	8	11	0	0	0	6	2	8	19
05:30 PM	3	6	9	0	0	0	9	1	10	19
05:45 PM	1	10	11	0	0	0	11	0	11	22
Total	10	34	44	0	0	0	32	4	36	80
Grand Total	17	55	72	0	0	0	67	10	77	149
Apprch %	23.6	76.4		0	0		87	13		
Total %	11.4	36.9	48.3	0	0	0	45	6.7	51.7	

	Airport Drive Westbound			Terminal Way West Northbound			Airport Drive Eastbound			
Start Time	Left	Thru	App. Total	Left	Right	App. Total	Thru	Right	App. Total	Int. Total
Peak Hour Analysis From 04:15 PM to 05:00 PM - Peak 1 of 1										
Peak Hour for Entire Intersection Begins at 04:15 PM										
04:15 PM	1	6	7	0	0	0	**14**	2	**16**	**23**
04:30 PM	**4**	4	8	0	0	0	11	**3**	14	22
04:45 PM	2	6	8	0	0	0	6	0	6	14
05:00 PM	3	**10**	**13**	0	0	0	6	1	7	20
Total Volume	10	26	36	0	0	0	37	6	43	79
% App. Total	27.8	72.2		0	0		86	14		
PHF	.625	.650	.692	.000	.000	.000	.661	.500	.672	.859

Counts Unlimited, Inc.
PO Box 1178
Corona, CA 92878
(951)268-6268

City of Ontario
N/S: Terminal Way West
E/W: Airport Drive
Weather: Clear

File Name : 01_ONT_Term W_AP PM
Site Code : 00322818
Start Date : 9/20/2022
Page No : 2

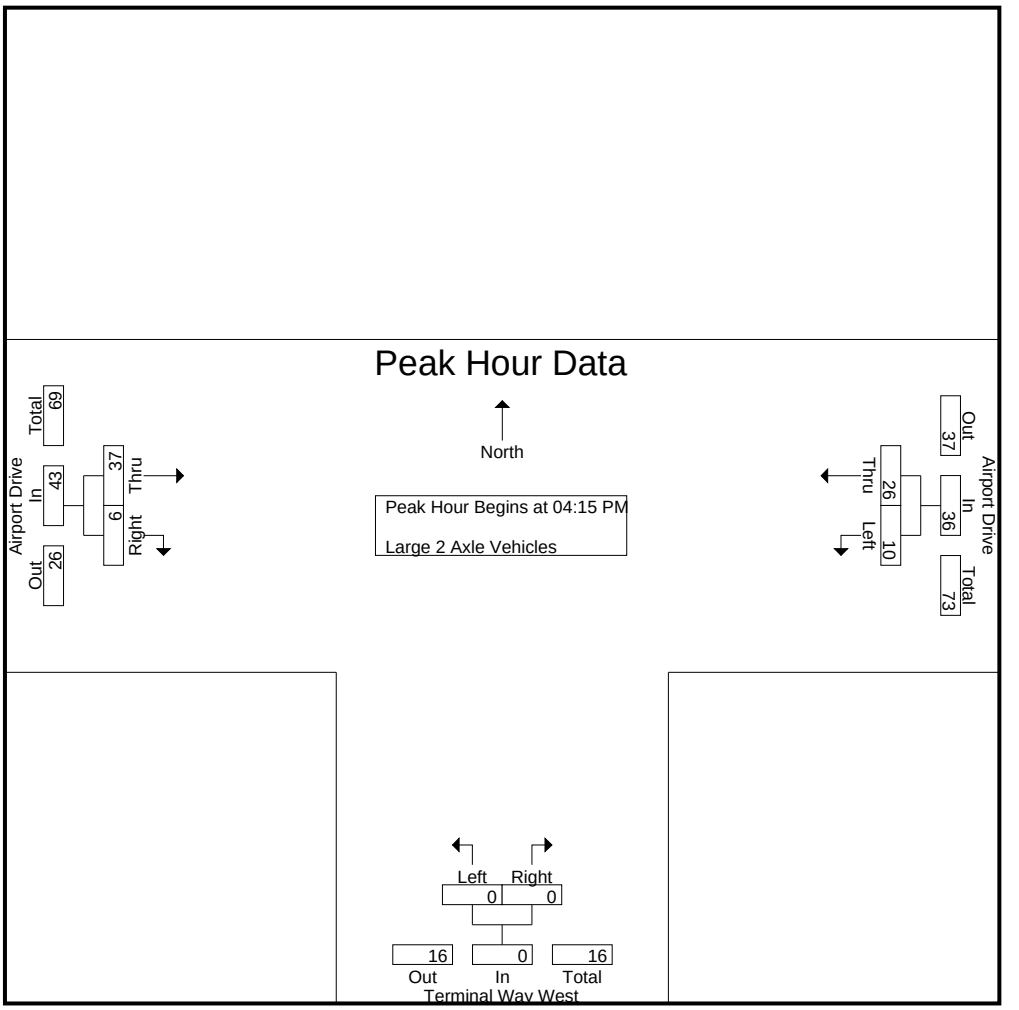

Peak Hour Analysis From 04:15 PM to 05:00 PM - Peak 1 of 1
Peak Hour for Each Approach Begins at:

	04:15 PM			04:15 PM			04:15 PM		
+0 mins.	1	6	7	0	0	0	**14**	2	**16**
+15 mins.	**4**	4	8	0	0	0	11	**3**	14
+30 mins.	2	6	8	0	0	0	6	0	6
+45 mins.	3	**10**	**13**	0	0	0	6	1	7
Total Volume	10	26	36	0	0	0	37	6	43
% App. Total	27.8	72.2		0	0		86	14	
PHF	.625	.650	.692	.000	.000	.000	.661	.500	.672

Counts Unlimited, Inc.
PO Box 1178
Corona, CA 92878
(951)268-6268

City of Ontario
N/S: Terminal Way West
E/W: Airport Drive
Weather: Clear

File Name : 01_ONT_Term W_AP PM
Site Code : 00322818
Start Date : 9/20/2022
Page No : 1

Groups Printed- 3 Axle Vehicles

	Airport Drive Westbound			Terminal Way West Northbound			Airport Drive Eastbound			
Start Time	Left	Thru	App. Total	Left	Right	App. Total	Thru	Right	App. Total	Int. Total
04:00 PM	0	3	3	0	0	0	4	0	4	7
04:15 PM	0	5	5	0	0	0	3	0	3	8
04:30 PM	0	3	3	0	0	0	4	0	4	7
04:45 PM	0	1	1	0	0	0	2	0	2	3
Total	0	12	12	0	0	0	13	0	13	25
05:00 PM	0	1	1	0	0	0	5	0	5	6
05:15 PM	0	0	0	0	0	0	2	0	2	2
05:30 PM	0	0	0	0	0	0	3	0	3	3
05:45 PM	0	1	1	0	0	0	0	0	0	1
Total	0	2	2	0	0	0	10	0	10	12
Grand Total	0	14	14	0	0	0	23	0	23	37
Apprch %	0	100		0	0		100	0		
Total %	0	37.8	37.8	0	0	0	62.2	0	62.2	

	Airport Drive Westbound			Terminal Way West Northbound			Airport Drive Eastbound			
Start Time	Left	Thru	App. Total	Left	Right	App. Total	Thru	Right	App. Total	Int. Total
Peak Hour Analysis From 04:15 PM to 05:00 PM - Peak 1 of 1										
Peak Hour for Entire Intersection Begins at 04:15 PM										
04:15 PM	0	**5**	**5**	0	0	0	3	0	3	**8**
04:30 PM	0	3	3	0	0	0	4	0	4	7
04:45 PM	0	1	1	0	0	0	2	0	2	3
05:00 PM	0	1	1	0	0	0	**5**	0	**5**	6
Total Volume	0	10	10	0	0	0	14	0	14	24
% App. Total	0	100		0	0		100	0		
PHF	.000	.500	.500	.000	.000	.000	.700	.000	.700	.750

Counts Unlimited, Inc.
PO Box 1178
Corona, CA 92878
(951)268-6268

City of Ontario
N/S: Terminal Way West
E/W: Airport Drive
Weather: Clear

File Name : 01_ONT_Term W_AP PM
Site Code : 00322818
Start Date : 9/20/2022
Page No : 2

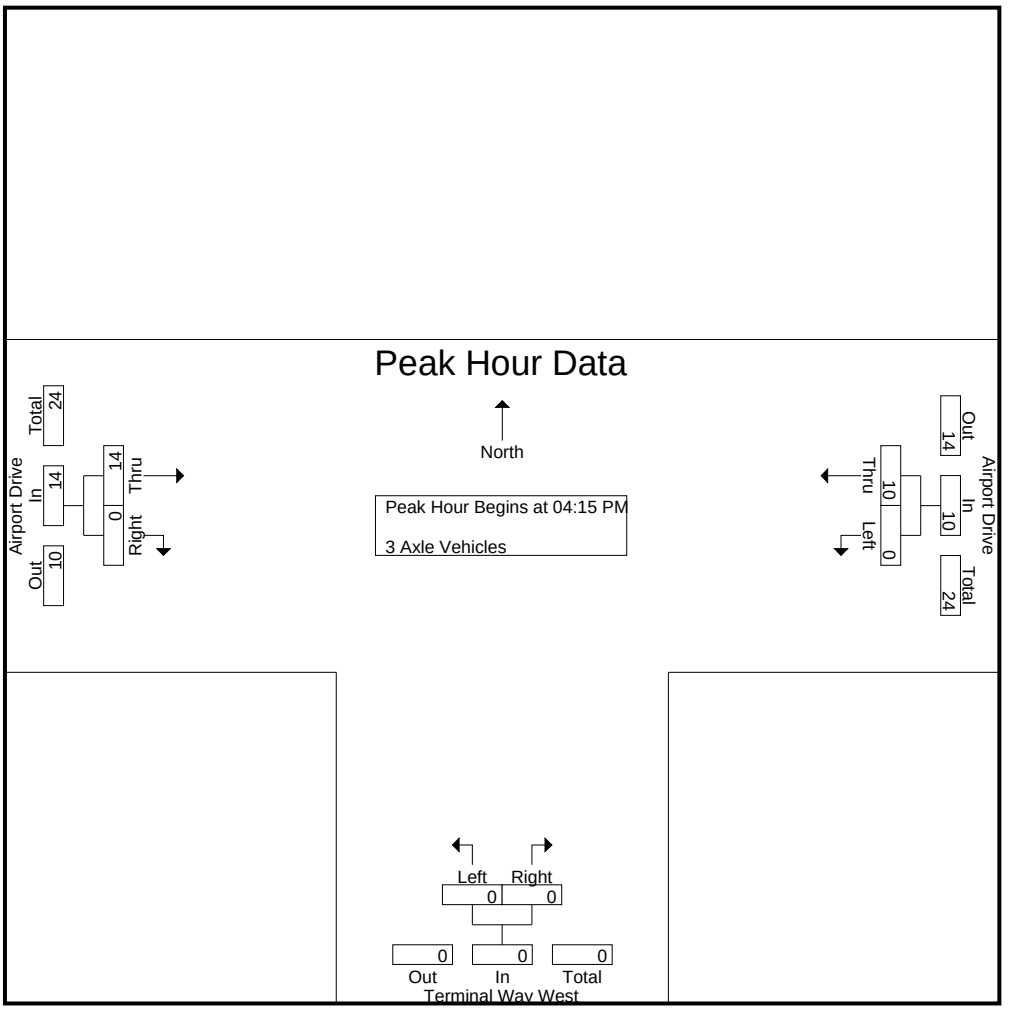

Peak Hour Analysis From 04:15 PM to 05:00 PM - Peak 1 of 1
Peak Hour for Each Approach Begins at:

	04:15 PM			04:15 PM			04:15 PM		
+0 mins.	0	**5**	**5**	0	0	0	3	0	3
+15 mins.	0	3	3	0	0	0	4	0	4
+30 mins.	0	1	1	0	0	0	2	0	2
+45 mins.	0	1	1	0	0	0	**5**	0	**5**
Total Volume	0	10	10	0	0	0	14	0	14
% App. Total	0	100		0	0		100	0	
PHF	.000	.500	.500	.000	.000	.000	.700	.000	.700

Counts Unlimited, Inc.
PO Box 1178
Corona, CA 92878
(951)268-6268

City of Ontario
N/S: Terminal Way West
E/W: Airport Drive
Weather: Clear

File Name : 01_ONT_Term W_AP PM
Site Code : 00322818
Start Date : 9/20/2022
Page No : 1

Groups Printed- 4+ Axle Trucks

	Airport Drive Westbound			Terminal Way West Northbound			Airport Drive Eastbound			
Start Time	Left	Thru	App. Total	Left	Right	App. Total	Thru	Right	App. Total	Int. Total
04:00 PM	0	0	0	0	0	0	2	0	2	2
04:15 PM	0	3	3	0	0	0	9	0	9	12
04:30 PM	0	3	3	0	0	0	9	0	9	12
04:45 PM	0	4	4	0	0	0	9	0	9	13
Total	0	10	10	0	0	0	29	0	29	39
05:00 PM	0	4	4	0	0	0	3	0	3	7
05:15 PM	0	0	0	0	0	0	1	0	1	1
05:30 PM	0	3	3	0	0	0	4	0	4	7
05:45 PM	0	3	3	0	0	0	5	0	5	8
Total	0	10	10	0	0	0	13	0	13	23
Grand Total	0	20	20	0	0	0	42	0	42	62
Apprch %	0	100		0	0		100	0		
Total %	0	32.3	32.3	0	0	0	67.7	0	67.7	

	Airport Drive Westbound			Terminal Way West Northbound			Airport Drive Eastbound			
Start Time	Left	Thru	App. Total	Left	Right	App. Total	Thru	Right	App. Total	Int. Total
Peak Hour Analysis From 04:15 PM to 05:00 PM - Peak 1 of 1										
Peak Hour for Entire Intersection Begins at 04:15 PM										
04:15 PM	0	3	3	0	0	0	**9**	0	**9**	12
04:30 PM	0	3	3	0	0	0	9	0	9	12
04:45 PM	0	**4**	**4**	0	0	0	9	0	9	**13**
05:00 PM	0	4	4	0	0	0	3	0	3	7
Total Volume	0	14	14	0	0	0	30	0	30	44
% App. Total	0	100		0	0		100	0		
PHF	.000	.875	.875	.000	.000	.000	.833	.000	.833	.846

Counts Unlimited, Inc.
PO Box 1178
Corona, CA 92878
(951)268-6268

City of Ontario
N/S: Terminal Way West
E/W: Airport Drive
Weather: Clear

File Name : 01_ONT_Term W_AP PM
Site Code : 00322818
Start Date : 9/20/2022
Page No : 2

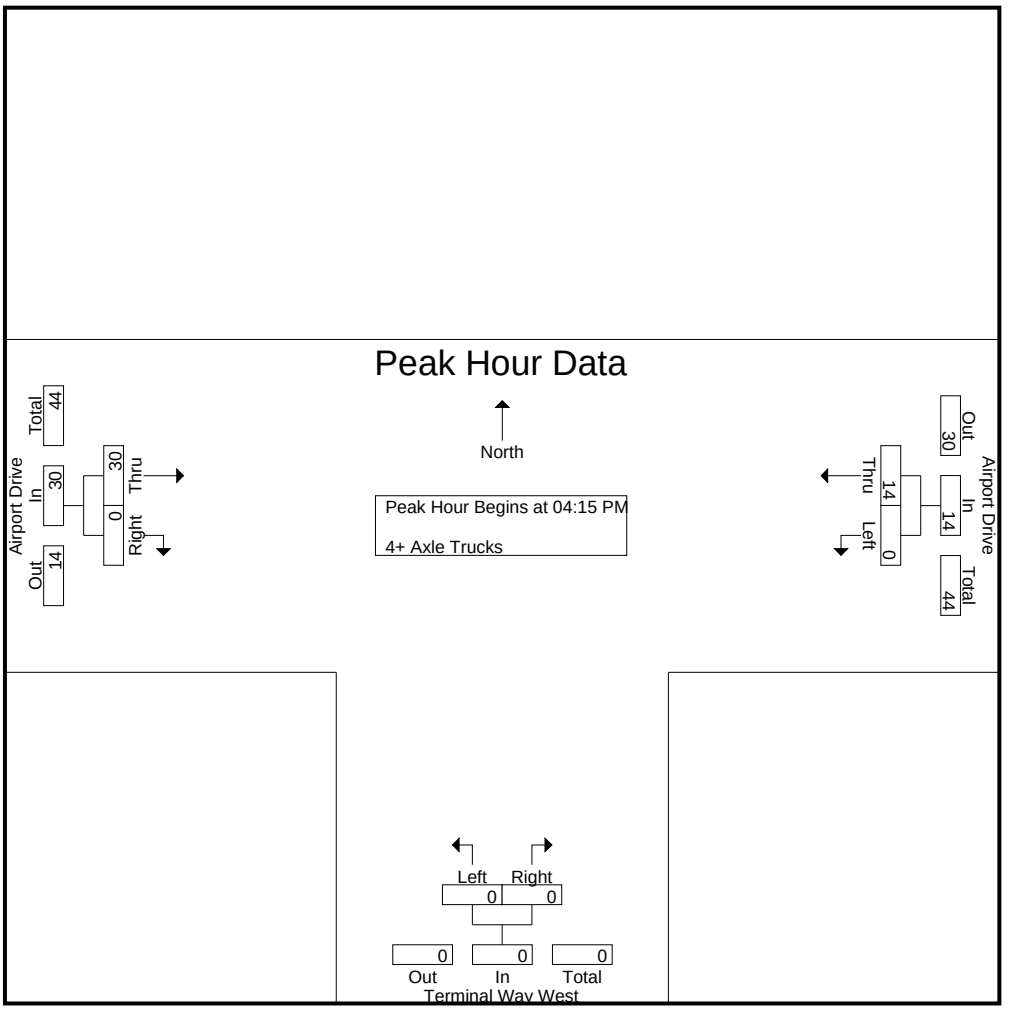

Peak Hour Analysis From 04:15 PM to 05:00 PM - Peak 1 of 1
Peak Hour for Each Approach Begins at:

	04:15 PM			04:15 PM			04:15 PM		
+0 mins.	0	3	3	0	0	0	**9**	0	**9**
+15 mins.	0	3	3	0	0	0	9	0	9
+30 mins.	0	**4**	**4**	0	0	0	9	0	9
+45 mins.	0	4	4	0	0	0	3	0	3
Total Volume	0	14	14	0	0	0	30	0	30
% App. Total	0	100		0	0		100	0	
PHF	.000	.875	.875	.000	.000	.000	.833	.000	.833

Location: Ontario
N/S: Terminal Way West
E/W: Airport Drive

Date: 9/20/2022
Day: Tuesday

PEDESTRIANS

	North Leg Dead End	East Leg Airport Drive	South Leg Terminal Way West	West Leg Airport Drive	
	Pedestrians	Pedestrians	Pedestrians	Pedestrians	
7:00 AM	0	0	0	0	0
7:15 AM	0	0	0	0	0
7:30 AM	0	0	0	0	0
7:45 AM	0	0	0	0	0
8:00 AM	0	0	0	0	0
8:15 AM	0	0	0	0	0
8:30 AM	0	0	0	0	0
8:45 AM	0	0	0	0	0
TOTAL VOLUMES:	0	0	0	0	0

	North Leg Dead End	East Leg Airport Drive	South Leg Terminal Way West	West Leg Airport Drive	
	Pedestrians	Pedestrians	Pedestrians	Pedestrians	
4:00 PM	0	0	0	0	0
4:15 PM	0	0	0	0	0
4:30 PM	0	0	0	0	0
4:45 PM	0	0	0	1	1
5:00 PM	0	0	0	1	1
5:15 PM	0	0	0	0	0
5:30 PM	0	0	0	0	0
5:45 PM	0	0	0	0	0
TOTAL VOLUMES:	0	0	0	2	2

Counts Unlimited, Inc.
PO Box 1178
Corona, CA 92878
951-268-6268

Location: Ontario
N/S: Terminal Way West
E/W: Airport Drive

Date: 9/20/2022
Day: Tuesday

BICYCLES

	Southbound Dead End			Westbound Airport Drive			Northbound Terminal Way West			Eastbound Airport Drive			
	Left	Thru	Right	Left	Thru	Right	Left	Thru	Right	Left	Thru	Right	
7:00 AM	0	0	0	0	0	0	0	0	0	0	0	0	0
7:15 AM	0	0	0	0	0	0	0	0	0	0	0	0	0
7:30 AM	0	0	0	0	0	0	0	0	0	0	0	0	0
7:45 AM	0	0	0	0	0	0	0	0	0	0	0	0	0
8:00 AM	0	0	0	0	0	0	0	0	0	0	0	0	0
8:15 AM	0	0	0	0	0	0	0	0	0	0	0	0	0
8:30 AM	0	0	0	0	0	0	0	0	0	0	0	0	0
8:45 AM	0	0	0	0	0	0	0	0	0	0	0	0	0
TOTAL VOLUMES:	0	0	0	0	0	0	0	0	0	0	0	0	0

	Southbound Dead End			Westbound Airport Drive			Northbound Terminal Way West			Eastbound Airport Drive			
	Left	Thru	Right	Left	Thru	Right	Left	Thru	Right	Left	Thru	Right	
4:00 PM	0	0	0	0	1	0	0	0	0	0	0	0	1
4:15 PM	0	0	0	0	0	0	0	0	0	0	0	0	0
4:30 PM	0	0	0	0	0	0	0	0	0	0	0	0	0
4:45 PM	0	0	0	0	0	0	0	0	0	0	0	0	0
5:00 PM	0	0	0	0	0	0	0	0	0	0	0	0	0
5:15 PM	0	0	0	0	0	0	0	0	0	0	0	0	0
5:30 PM	0	0	0	0	0	0	0	0	0	0	0	0	0
5:45 PM	0	0	0	0	0	0	0	0	0	0	0	0	0
TOTAL VOLUMES:	0	0	0	0	1	0	0	0	0	0	0	0	1

Counts Unlimited, Inc.
PO Box 1178
Corona, CA 92878
951-268-6268

Counts Unlimited, Inc.
PO Box 1178
Corona, CA 92878
(951)268-6268

City of Ontario
N/S: Archibald Avenue
E/W: I-10 Ramps
Weather: Clear

File Name : 02_ONT_Arch_10 AM
Site Code : 00322818
Start Date : 9/20/2022
Page No : 1

Groups Printed- Passenger Vehicles - Large 2 Axle Vehicles - 3 Axle Vehicles - 4+ Axle Trucks

	Archibald Avenue Southbound				I-10 Ramps Westbound				Archibald Avenue Northbound				I-10 Ramps Eastbound				
Start Time	Left	Thru	Right	App. Total	Left	Thru	Right	App. Total	Left	Thru	Right	App. Total	Left	Thru	Right	App. Total	Int. Total
07:00 AM	120	115	79	314	41	0	80	121	8	79	57	144	104	0	45	149	728
07:15 AM	146	147	99	392	33	0	60	93	12	75	78	165	126	0	34	160	810
07:30 AM	131	160	103	394	41	0	80	121	19	119	71	209	152	0	52	204	928
07:45 AM	112	191	94	397	32	0	101	133	21	138	88	247	175	0	95	270	1047
Total	509	613	375	1497	147	0	321	468	60	411	294	765	557	0	226	783	3513
08:00 AM	101	158	103	362	38	0	102	140	24	135	83	242	147	0	78	225	969
08:15 AM	90	135	83	308	42	0	71	113	18	139	81	238	166	0	77	243	902
08:30 AM	112	121	81	314	41	0	111	152	26	123	67	216	141	0	69	210	892
08:45 AM	64	94	81	239	66	0	102	168	22	144	63	229	138	0	71	209	845
Total	367	508	348	1223	187	0	386	573	90	541	294	925	592	0	295	887	3608
Grand Total	876	1121	723	2720	334	0	707	1041	150	952	588	1690	1149	0	521	1670	7121
Apprch %	32.2	41.2	26.6		32.1	0	67.9		8.9	56.3	34.8		68.8	0	31.2		
Total %	12.3	15.7	10.2	38.2	4.7	0	9.9	14.6	2.1	13.4	8.3	23.7	16.1	0	7.3	23.5	
Passenger Vehicles	783	1082	654	2519	314	0	667	981	141	917	513	1571	1097	0	492	1589	6660
% Passenger Vehicles	89.4	96.5	90.5	92.6	94	0	94.3	94.2	94	96.3	87.2	93	95.5	0	94.4	95.1	93.5
Large 2 Axle Vehicles	41	25	15	81	4	0	19	23	4	22	21	47	12	0	3	15	166
% Large 2 Axle Vehicles	4.7	2.2	2.1	3	1.2	0	2.7	2.2	2.7	2.3	3.6	2.8	1	0	0.6	0.9	2.3
3 Axle Vehicles	13	6	2	21	7	0	7	14	0	3	21	24	12	0	14	26	85
% 3 Axle Vehicles	1.5	0.5	0.3	0.8	2.1	0	1	1.3	0	0.3	3.6	1.4	1	0	2.7	1.6	1.2
4+ Axle Trucks	39	8	52	99	9	0	14	23	5	10	33	48	28	0	12	40	210
% 4+ Axle Trucks	4.5	0.7	7.2	3.6	2.7	0	2	2.2	3.3	1.1	5.6	2.8	2.4	0	2.3	2.4	2.9

	Archibald Avenue Southbound				I-10 Ramps Westbound				Archibald Avenue Northbound				I-10 Ramps Eastbound				
Start Time	Left	Thru	Right	App. Total	Left	Thru	Right	App. Total	Left	Thru	Right	App. Total	Left	Thru	Right	App. Total	Int. Total
Peak Hour Analysis From 07:00 AM to 08:45 AM - Peak 1 of 1																	
Peak Hour for Entire Intersection Begins at 07:30 AM																	
07:30 AM	**131**	160	**103**	394	41	0	80	121	19	119	71	209	152	0	52	204	928
07:45 AM	112	**191**	94	**397**	32	0	101	133	21	138	**88**	**247**	**175**	0	**95**	**270**	**1047**
08:00 AM	101	158	103	362	38	0	**102**	**140**	**24**	135	83	242	147	0	78	225	969
08:15 AM	90	135	83	308	**42**	0	71	113	18	**139**	81	238	166	0	77	243	902
Total Volume	434	644	383	1461	153	0	354	507	82	531	323	936	640	0	302	942	3846
% App. Total	29.7	44.1	26.2		30.2	0	69.8		8.8	56.7	34.5		67.9	0	32.1		
PHF	.828	.843	.930	.920	.911	.000	.868	.905	.854	.955	.918	.947	.914	.000	.795	.872	.918

Counts Unlimited, Inc.
PO Box 1178
Corona, CA 92878
(951)268-6268

City of Ontario
N/S: Archibald Avenue
E/W: I-10 Ramps
Weather: Clear

File Name : 02_ONT_Arch_10 AM
Site Code : 00322818
Start Date : 9/20/2022

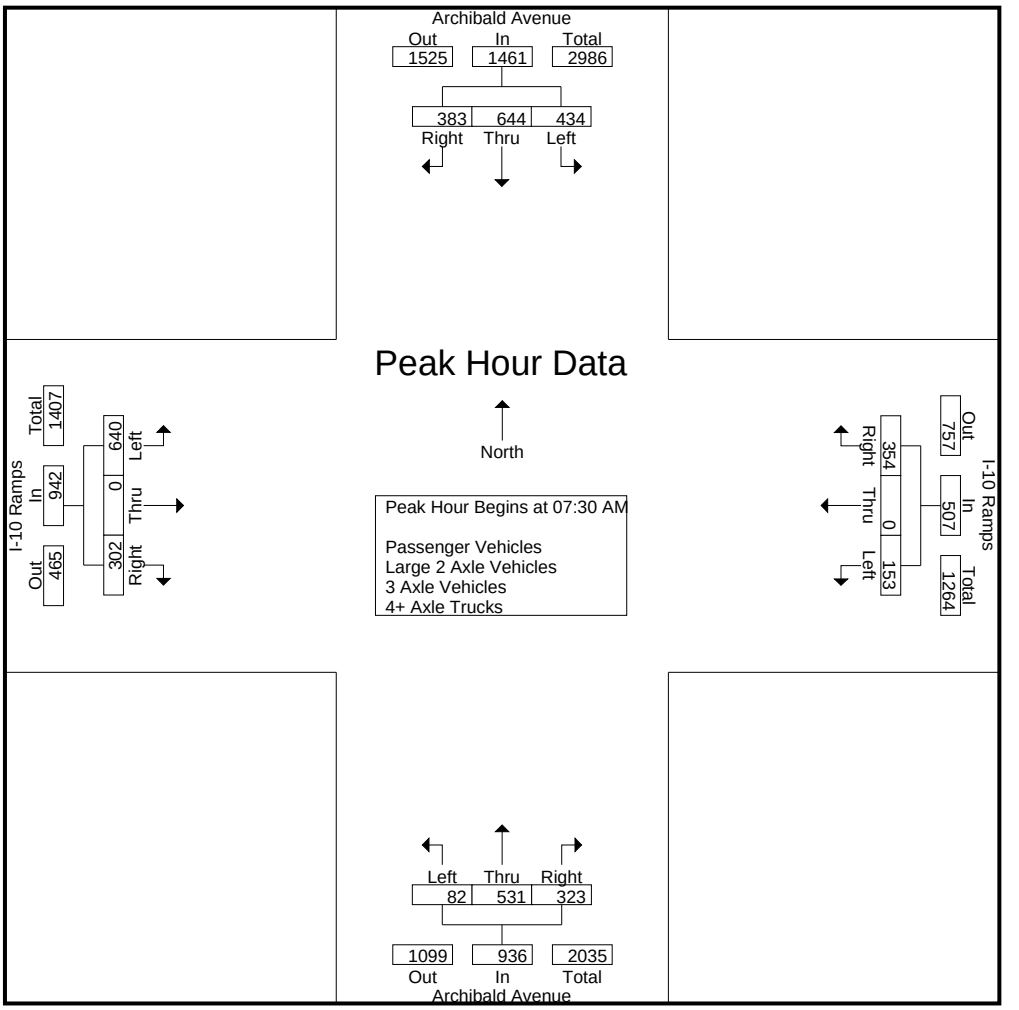

Peak Hour Analysis From 07:00 AM to 08:45 AM - Peak 1 of 1
Peak Hour for Each Approach Begins at:

	07:15 AM				08:00 AM				07:45 AM				07:45 AM			
+0 mins.	**146**	147	99	392	38	0	102	140	21	138	**88**	**247**	**175**	0	**95**	**270**
+15 mins.	131	160	**103**	394	42	0	71	113	24	135	83	242	147	0	78	225
+30 mins.	112	**191**	94	**397**	41	0	**111**	152	18	**139**	81	238	166	0	77	243
+45 mins.	101	158	103	362	**66**	0	102	**168**	**26**	123	67	216	141	0	69	210
Total Volume	490	656	399	1545	187	0	386	573	89	535	319	943	629	0	319	948
% App. Total	31.7	42.5	25.8		32.6	0	67.4		9.4	56.7	33.8		66.4	0	33.6	
PHF	.839	.859	.968	.973	.708	.000	.869	.853	.856	.962	.906	.954	.899	.000	.839	.878

Counts Unlimited, Inc.
PO Box 1178
Corona, CA 92878
(951)268-6268

City of Ontario
N/S: Archibald Avenue
E/W: I-10 Ramps
Weather: Clear

File Name : 02_ONT_Arch_10 AM
Site Code : 00322818
Start Date : 9/20/2022
Page No : 1

Groups Printed- Passenger Vehicles

	Archibald Avenue Southbound				I-10 Ramps Westbound				Archibald Avenue Northbound				I-10 Ramps Eastbound				
Start Time	Left	Thru	Right	App. Total	Left	Thru	Right	App. Total	Left	Thru	Right	App. Total	Left	Thru	Right	App. Total	Int. Total
07:00 AM	107	110	78	295	40	0	74	114	8	74	42	124	92	0	42	134	667
07:15 AM	130	140	92	362	29	0	56	85	12	70	70	152	120	0	31	151	750
07:30 AM	121	157	97	375	36	0	76	112	19	117	61	197	143	0	49	192	876
07:45 AM	103	185	83	371	32	0	93	125	20	132	80	232	174	0	94	268	996
Total	461	592	350	1403	137	0	299	436	59	393	253	705	529	0	216	745	3289
08:00 AM	87	156	93	336	33	0	97	130	22	131	75	228	144	0	73	217	911
08:15 AM	83	129	75	287	40	0	68	108	16	135	74	225	159	0	74	233	853
08:30 AM	99	116	67	282	40	0	108	148	25	120	58	203	136	0	62	198	831
08:45 AM	53	89	69	211	64	0	95	159	19	138	53	210	129	0	67	196	776
Total	322	490	304	1116	177	0	368	545	82	524	260	866	568	0	276	844	3371
Grand Total	783	1082	654	2519	314	0	667	981	141	917	513	1571	1097	0	492	1589	6660
Apprch %	31.1	43	26		32	0	68		9	58.4	32.7		69	0	31		
Total %	11.8	16.2	9.8	37.8	4.7	0	10	14.7	2.1	13.8	7.7	23.6	16.5	0	7.4	23.9	

	Archibald Avenue Southbound				I-10 Ramps Westbound				Archibald Avenue Northbound				I-10 Ramps Eastbound				
Start Time	Left	Thru	Right	App. Total	Left	Thru	Right	App. Total	Left	Thru	Right	App. Total	Left	Thru	Right	App. Total	Int. Total
Peak Hour Analysis From 07:30 AM to 08:15 AM - Peak 1 of 1																	
Peak Hour for Entire Intersection Begins at 07:30 AM																	
07:30 AM	**121**	157	**97**	**375**	36	0	76	112	19	117	61	197	143	0	49	192	876
07:45 AM	103	**185**	83	371	32	0	93	125	20	132	**80**	**232**	**174**	0	**94**	**268**	**996**
08:00 AM	87	156	93	336	33	0	**97**	**130**	**22**	131	75	228	144	0	73	217	911
08:15 AM	83	129	75	287	**40**	0	68	108	16	**135**	74	225	159	0	74	233	853
Total Volume	394	627	348	1369	141	0	334	475	77	515	290	882	620	0	290	910	3636
% App. Total	28.8	45.8	25.4		29.7	0	70.3		8.7	58.4	32.9		68.1	0	31.9		
PHF	.814	.847	.897	.913	.881	.000	.861	.913	.875	.954	.906	.950	.891	.000	.771	.849	.913

Counts Unlimited, Inc.
PO Box 1178
Corona, CA 92878
(951)268-6268

City of Ontario
N/S: Archibald Avenue
E/W: I-10 Ramps
Weather: Clear

File Name : 02_ONT_Arch_10 AM
Site Code : 00322818
Start Date : 9/20/2022
Page No : 2

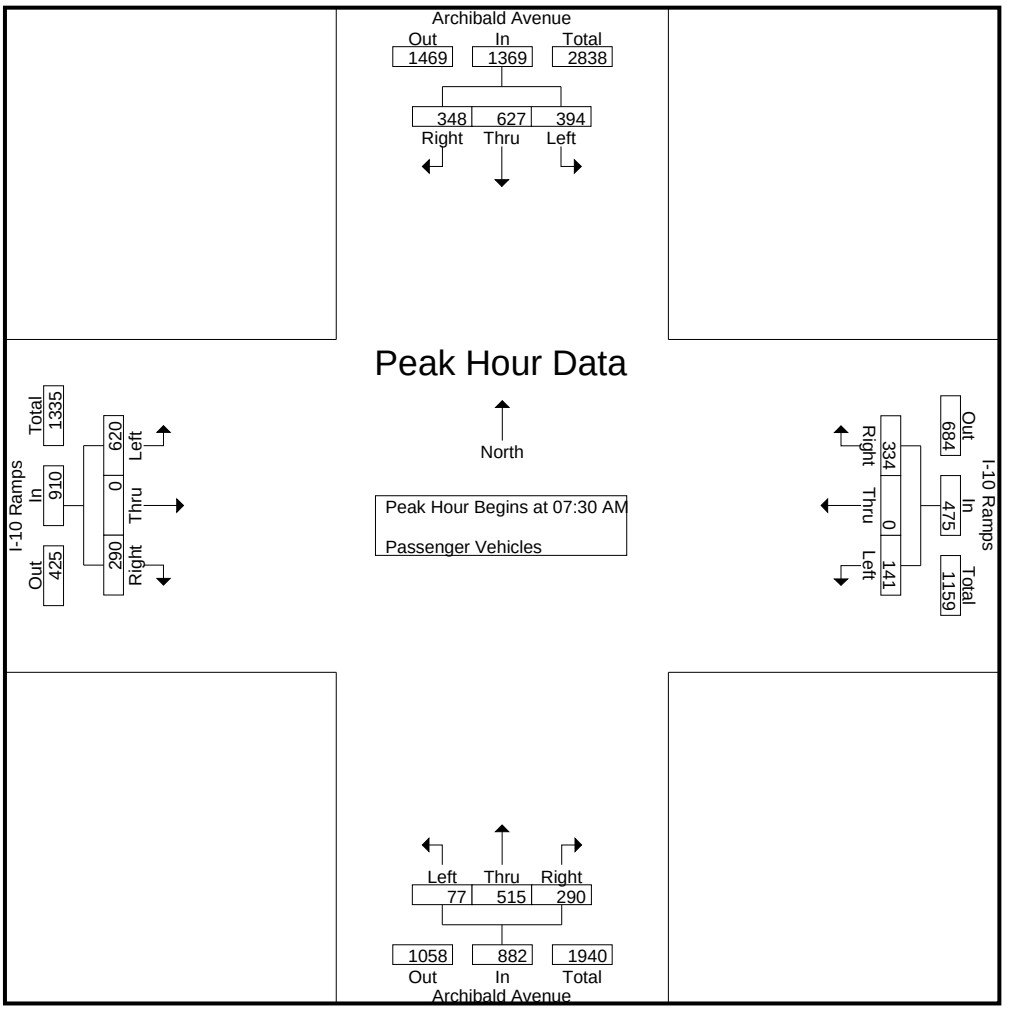

Peak Hour Analysis From 07:30 AM to 08:15 AM - Peak 1 of 1
Peak Hour for Each Approach Begins at:

	07:30 AM				07:30 AM				07:30 AM				07:30 AM			
+0 mins.	**121**	157	**97**	**375**	36	0	76	112	19	117	61	197	143	0	49	192
+15 mins.	103	**185**	83	371	32	0	93	125	20	132	**80**	**232**	**174**	0	**94**	**268**
+30 mins.	87	156	93	336	33	0	**97**	**130**	**22**	131	75	228	144	0	73	217
+45 mins.	83	129	75	287	**40**	0	68	108	16	**135**	74	225	159	0	74	233
Total Volume	394	627	348	1369	141	0	334	475	77	515	290	882	620	0	290	910
% App. Total	28.8	45.8	25.4		29.7	0	70.3		8.7	58.4	32.9		68.1	0	31.9	
PHF	.814	.847	.897	.913	.881	.000	.861	.913	.875	.954	.906	.950	.891	.000	.771	.849

Counts Unlimited, Inc.
PO Box 1178
Corona, CA 92878
(951)268-6268

City of Ontario
N/S: Archibald Avenue
E/W: I-10 Ramps
Weather: Clear

File Name : 02_ONT_Arch_10 AM
Site Code : 00322818
Start Date : 9/20/2022
Page No : 1

Groups Printed- Large 2 Axle Vehicles

	Archibald Avenue Southbound				I-10 Ramps Westbound				Archibald Avenue Northbound				I-10 Ramps Eastbound				
Start Time	Left	Thru	Right	App. Total	Left	Thru	Right	App. Total	Left	Thru	Right	App. Total	Left	Thru	Right	App. Total	Int. Total
07:00 AM	3	2	0	5	0	0	3	3	0	4	3	7	3	0	1	4	19
07:15 AM	8	5	1	14	0	0	0	0	0	2	4	6	0	0	2	2	22
07:30 AM	4	3	0	7	0	0	3	3	0	0	3	3	1	0	0	1	14
07:45 AM	5	4	2	11	0	0	3	3	1	4	3	8	1	0	0	1	23
Total	20	14	3	37	0	0	9	9	1	10	13	24	5	0	3	8	78
08:00 AM	6	1	3	10	2	0	4	6	1	2	3	6	2	0	0	2	24
08:15 AM	3	5	2	10	1	0	0	1	1	3	2	6	1	0	0	1	18
08:30 AM	5	2	3	10	0	0	3	3	0	2	2	4	2	0	0	2	19
08:45 AM	7	3	4	14	1	0	3	4	1	5	1	7	2	0	0	2	27
Total	21	11	12	44	4	0	10	14	3	12	8	23	7	0	0	7	88
Grand Total	41	25	15	81	4	0	19	23	4	22	21	47	12	0	3	15	166
Apprch %	50.6	30.9	18.5		17.4	0	82.6		8.5	46.8	44.7		80	0	20		
Total %	24.7	15.1	9	48.8	2.4	0	11.4	13.9	2.4	13.3	12.7	28.3	7.2	0	1.8	9	

	Archibald Avenue Southbound				I-10 Ramps Westbound				Archibald Avenue Northbound				I-10 Ramps Eastbound				
Start Time	Left	Thru	Right	App. Total	Left	Thru	Right	App. Total	Left	Thru	Right	App. Total	Left	Thru	Right	App. Total	Int. Total
Peak Hour Analysis From 07:30 AM to 08:15 AM - Peak 1 of 1																	
Peak Hour for Entire Intersection Begins at 07:30 AM																	
07:30 AM	4	3	0	7	0	0	3	3	0	0	**3**	3	1	0	0	1	14
07:45 AM	5	4	2	**11**	0	0	3	3	**1**	**4**	3	**8**	1	0	0	1	23
08:00 AM	**6**	1	**3**	10	**2**	0	**4**	**6**	1	2	3	6	**2**	0	0	**2**	**24**
08:15 AM	3	**5**	2	10	1	0	0	1	1	3	2	6	1	0	0	1	18
Total Volume	18	13	7	38	3	0	10	13	3	9	11	23	5	0	0	5	79
% App. Total	47.4	34.2	18.4		23.1	0	76.9		13	39.1	47.8		100	0	0		
PHF	.750	.650	.583	.864	.375	.000	.625	.542	.750	.563	.917	.719	.625	.000	.000	.625	.823

Counts Unlimited, Inc.
PO Box 1178
Corona, CA 92878
(951)268-6268

City of Ontario
N/S: Archibald Avenue
E/W: I-10 Ramps
Weather: Clear

File Name : 02_ONT_Arch_10 AM
Site Code : 00322818
Start Date : 9/20/2022
Page No : 2

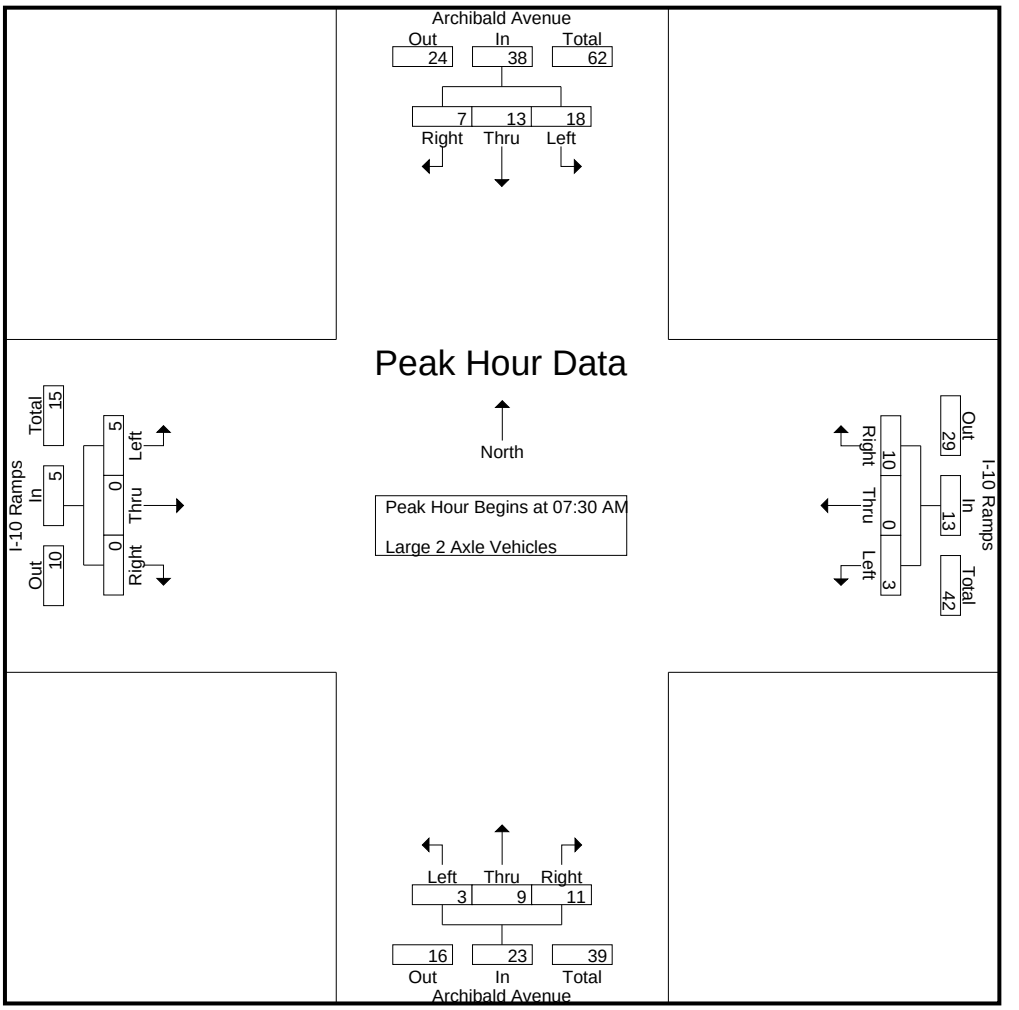

Peak Hour Analysis From 07:30 AM to 08:15 AM - Peak 1 of 1
Peak Hour for Each Approach Begins at:

	07:30 AM				07:30 AM				07:30 AM				07:30 AM			
+0 mins.	4	3	0	7	0	0	3	3	0	0	**3**	3	1	0	0	1
+15 mins.	5	4	2	**11**	0	0	3	3	**1**	**4**	3	**8**	1	0	0	1
+30 mins.	**6**	1	**3**	10	**2**	0	**4**	**6**	1	2	3	6	**2**	0	0	**2**
+45 mins.	3	**5**	2	10	1	0	0	1	1	3	2	6	1	0	0	1
Total Volume	18	13	7	38	3	0	10	13	3	9	11	23	5	0	0	5
% App. Total	47.4	34.2	18.4		23.1	0	76.9		13	39.1	47.8		100	0	0	
PHF	.750	.650	.583	.864	.375	.000	.625	.542	.750	.563	.917	.719	.625	.000	.000	.625

Counts Unlimited, Inc.
PO Box 1178
Corona, CA 92878
(951)268-6268

City of Ontario
N/S: Archibald Avenue
E/W: I-10 Ramps
Weather: Clear

File Name : 02_ONT_Arch_10 AM
Site Code : 00322818
Start Date : 9/20/2022
Page No : 1

Groups Printed- 3 Axle Vehicles

	Archibald Avenue Southbound				I-10 Ramps Westbound				Archibald Avenue Northbound				I-10 Ramps Eastbound				
Start Time	Left	Thru	Right	App. Total	Left	Thru	Right	App. Total	Left	Thru	Right	App. Total	Left	Thru	Right	App. Total	Int. Total
07:00 AM	3	1	0	4	1	0	1	2	0	1	7	8	4	0	0	4	18
07:15 AM	3	1	1	5	0	0	2	2	0	1	3	4	2	0	0	2	13
07:30 AM	2	0	0	2	4	0	0	4	0	0	3	3	3	0	1	4	13
07:45 AM	1	1	0	2	0	0	2	2	0	0	2	2	0	0	0	0	6
Total	9	3	1	13	5	0	5	10	0	2	15	17	9	0	1	10	50
08:00 AM	1	1	0	2	1	0	0	1	0	1	1	2	0	0	3	3	8
08:15 AM	0	0	0	0	1	0	2	3	0	0	1	1	1	0	2	3	7
08:30 AM	2	1	1	4	0	0	0	0	0	0	0	0	1	0	5	6	10
08:45 AM	1	1	0	2	0	0	0	0	0	0	4	4	1	0	3	4	10
Total	4	3	1	8	2	0	2	4	0	1	6	7	3	0	13	16	35
Grand Total	13	6	2	21	7	0	7	14	0	3	21	24	12	0	14	26	85
Apprch %	61.9	28.6	9.5		50	0	50		0	12.5	87.5		46.2	0	53.8		
Total %	15.3	7.1	2.4	24.7	8.2	0	8.2	16.5	0	3.5	24.7	28.2	14.1	0	16.5	30.6	

	Archibald Avenue Southbound				I-10 Ramps Westbound				Archibald Avenue Northbound				I-10 Ramps Eastbound				
Start Time	Left	Thru	Right	App. Total	Left	Thru	Right	App. Total	Left	Thru	Right	App. Total	Left	Thru	Right	App. Total	Int. Total
Peak Hour Analysis From 07:30 AM to 08:15 AM - Peak 1 of 1																	
Peak Hour for Entire Intersection Begins at 07:30 AM																	
07:30 AM	**2**	0	0	**2**	**4**	0	0	**4**	0	0	**3**	**3**	**3**	0	1	**4**	**13**
07:45 AM	1	**1**	0	2	0	0	**2**	2	0	0	2	2	0	0	0	0	6
08:00 AM	1	1	0	2	1	0	0	1	0	**1**	1	2	0	0	**3**	3	8
08:15 AM	0	0	0	0	1	0	2	3	0	0	1	1	1	0	2	3	7
Total Volume	4	2	0	6	6	0	4	10	0	1	7	8	4	0	6	10	34
% App. Total	66.7	33.3	0		60	0	40		0	12.5	87.5		40	0	60		
PHF	.500	.500	.000	.750	.375	.000	.500	.625	.000	.250	.583	.667	.333	.000	.500	.625	.654

Counts Unlimited, Inc.
PO Box 1178
Corona, CA 92878
(951)268-6268

City of Ontario
N/S: Archibald Avenue
E/W: I-10 Ramps
Weather: Clear

File Name : 02_ONT_Arch_10 AM
Site Code : 00322818
Start Date : 9/20/2022
Page No : 2

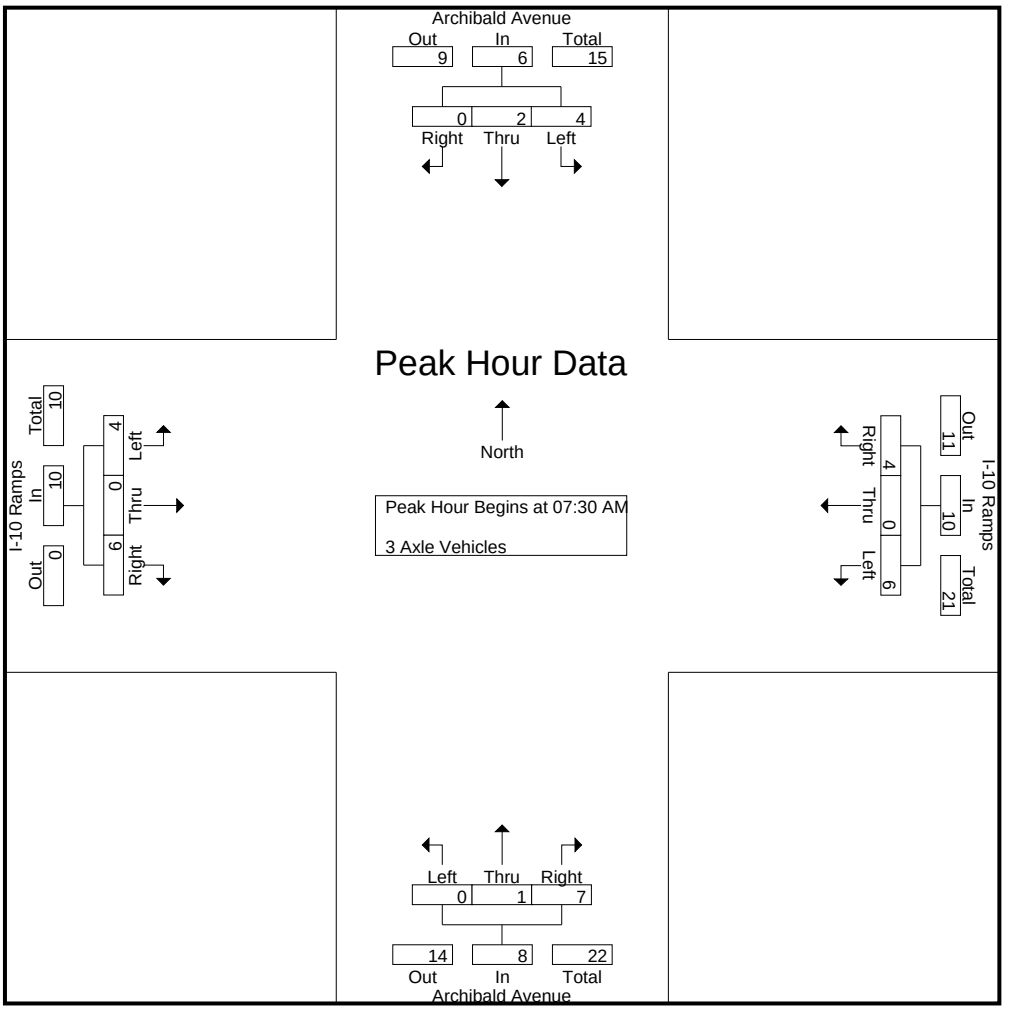

Peak Hour Analysis From 07:30 AM to 08:15 AM - Peak 1 of 1
Peak Hour for Each Approach Begins at:

	07:30 AM				07:30 AM				07:30 AM				07:30 AM			
+0 mins.	**2**	0	0	**2**	**4**	0	0	**4**	0	0	**3**	**3**	**3**	0	1	**4**
+15 mins.	1	**1**	0	2	0	0	**2**	2	0	0	2	2	0	0	0	0
+30 mins.	1	1	0	2	1	0	0	1	0	**1**	1	2	0	0	**3**	3
+45 mins.	0	0	0	0	1	0	2	3	0	0	1	1	1	0	2	3
Total Volume	4	2	0	6	6	0	4	10	0	1	7	8	4	0	6	10
% App. Total	66.7	33.3	0		60	0	40		0	12.5	87.5		40	0	60	
PHF	.500	.500	.000	.750	.375	.000	.500	.625	.000	.250	.583	.667	.333	.000	.500	.625

Counts Unlimited, Inc.
PO Box 1178
Corona, CA 92878
(951)268-6268

City of Ontario
N/S: Archibald Avenue
E/W: I-10 Ramps
Weather: Clear

File Name : 02_ONT_Arch_10 AM
Site Code : 00322818
Start Date : 9/20/2022
Page No : 1

Groups Printed- 4+ Axle Trucks

	Archibald Avenue Southbound				I-10 Ramps Westbound				Archibald Avenue Northbound				I-10 Ramps Eastbound				
Start Time	Left	Thru	Right	App. Total	Left	Thru	Right	App. Total	Left	Thru	Right	App. Total	Left	Thru	Right	App. Total	Int. Total
07:00 AM	7	2	1	10	0	0	2	2	0	0	5	5	5	0	2	7	24
07:15 AM	5	1	5	11	4	0	2	6	0	2	1	3	4	0	1	5	25
07:30 AM	4	0	6	10	1	0	1	2	0	2	4	6	5	0	2	7	25
07:45 AM	3	1	9	13	0	0	3	3	0	2	3	5	0	0	1	1	22
Total	19	4	21	44	5	0	8	13	0	6	13	19	14	0	6	20	96
08:00 AM	7	0	7	14	2	0	1	3	1	1	4	6	1	0	2	3	26
08:15 AM	4	1	6	11	0	0	1	1	1	1	4	6	5	0	1	6	24
08:30 AM	6	2	10	18	1	0	0	1	1	1	7	9	2	0	2	4	32
08:45 AM	3	1	8	12	1	0	4	5	2	1	5	8	6	0	1	7	32
Total	20	4	31	55	4	0	6	10	5	4	20	29	14	0	6	20	114
Grand Total	39	8	52	99	9	0	14	23	5	10	33	48	28	0	12	40	210
Apprch %	39.4	8.1	52.5		39.1	0	60.9		10.4	20.8	68.8		70	0	30		
Total %	18.6	3.8	24.8	47.1	4.3	0	6.7	11	2.4	4.8	15.7	22.9	13.3	0	5.7	19	

	Archibald Avenue Southbound				I-10 Ramps Westbound				Archibald Avenue Northbound				I-10 Ramps Eastbound				
Start Time	Left	Thru	Right	App. Total	Left	Thru	Right	App. Total	Left	Thru	Right	App. Total	Left	Thru	Right	App. Total	Int. Total
Peak Hour Analysis From 07:30 AM to 08:15 AM - Peak 1 of 1																	
Peak Hour for Entire Intersection Begins at 07:30 AM																	
07:30 AM	4	0	6	10	1	0	1	2	0	**2**	**4**	**6**	**5**	0	**2**	**7**	25
07:45 AM	3	**1**	**9**	13	0	0	**3**	**3**	0	2	3	5	0	0	1	1	22
08:00 AM	**7**	0	7	**14**	**2**	0	1	3	**1**	1	4	6	1	0	2	3	**26**
08:15 AM	4	1	6	11	0	0	1	1	1	1	4	6	5	0	1	6	24
Total Volume	18	2	28	48	3	0	6	9	2	6	15	23	11	0	6	17	97
% App. Total	37.5	4.2	58.3		33.3	0	66.7		8.7	26.1	65.2		64.7	0	35.3		
PHF	.643	.500	.778	.857	.375	.000	.500	.750	.500	.750	.938	.958	.550	.000	.750	.607	.933

Counts Unlimited, Inc.
PO Box 1178
Corona, CA 92878
(951)268-6268

City of Ontario
N/S: Archibald Avenue
E/W: I-10 Ramps
Weather: Clear

File Name : 02_ONT_Arch_10 AM
Site Code : 00322818
Start Date : 9/20/2022
Page No : 2

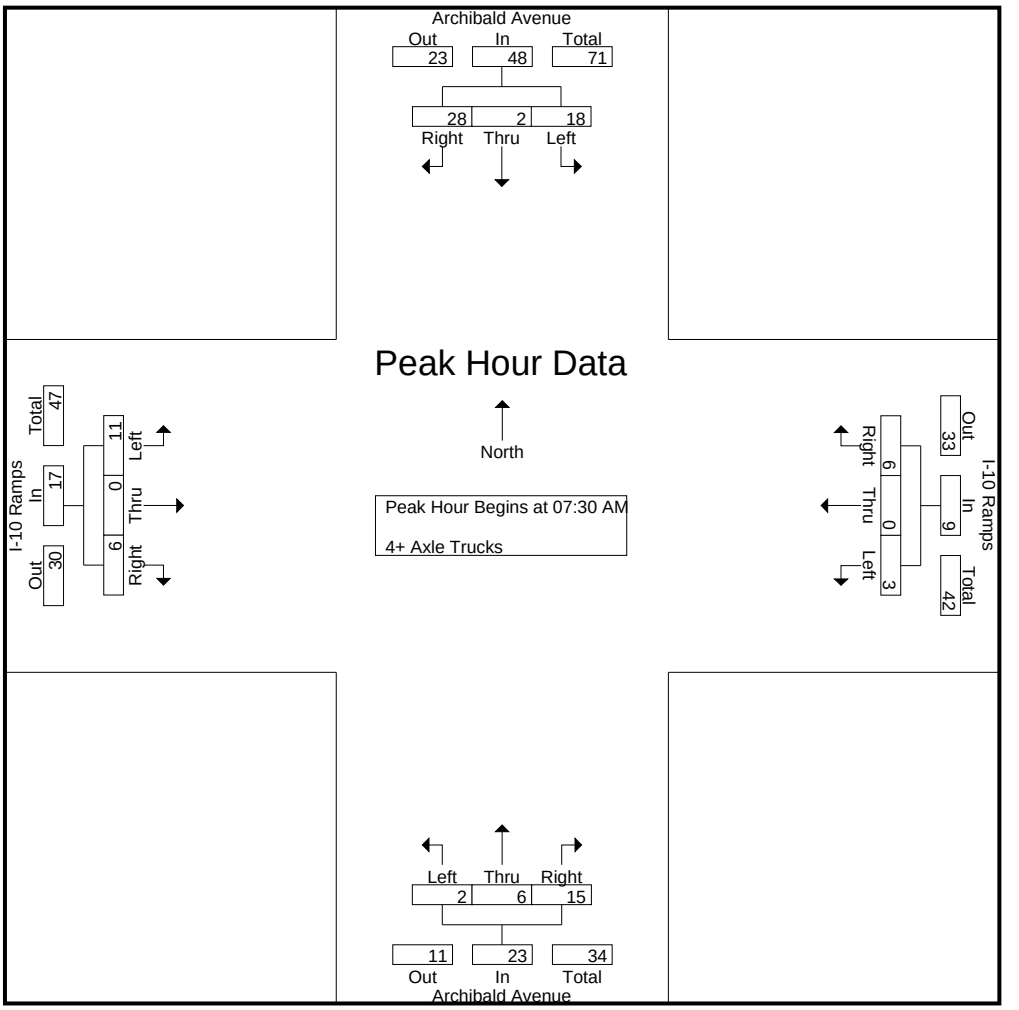

Peak Hour Analysis From 07:30 AM to 08:15 AM - Peak 1 of 1
Peak Hour for Each Approach Begins at:

	07:30 AM				07:30 AM				07:30 AM				07:30 AM			
+0 mins.	4	0	6	10	1	0	1	2	0	**2**	**4**	**6**	**5**	0	**2**	**7**
+15 mins.	3	**1**	**9**	13	0	0	**3**	**3**	0	2	3	5	0	0	1	1
+30 mins.	**7**	0	7	**14**	**2**	0	1	3	**1**	1	4	6	1	0	2	3
+45 mins.	4	1	6	11	0	0	1	1	1	1	4	6	5	0	1	6
Total Volume	18	2	28	48	3	0	6	9	2	6	15	23	11	0	6	17
% App. Total	37.5	4.2	58.3		33.3	0	66.7		8.7	26.1	65.2		64.7	0	35.3	
PHF	.643	.500	.778	.857	.375	.000	.500	.750	.500	.750	.938	.958	.550	.000	.750	.607

Counts Unlimited, Inc.
PO Box 1178
Corona, CA 92878
(951)268-6268

City of Ontario
N/S: Archibald Avenue
E/W: I-10 Ramps
Weather: Clear

File Name : 02_ONT_Arch_10 PM
Site Code : 00322818
Start Date : 9/20/2022
Page No : 1

Groups Printed- Passenger Vehicles - Large 2 Axle Vehicles - 3 Axle Vehicles - 4+ Axle Trucks

	Archibald Avenue Southbound				I-10 Ramps Westbound				Archibald Avenue Northbound				I-10 Ramps Eastbound				
Start Time	Left	Thru	Right	App. Total	Left	Thru	Right	App. Total	Left	Thru	Right	App. Total	Left	Thru	Right	App. Total	Int. Total
04:00 PM	64	136	117	317	33	0	81	114	58	216	130	404	112	0	57	169	1004
04:15 PM	55	127	107	289	36	0	103	139	66	198	119	383	122	0	45	167	978
04:30 PM	89	152	115	356	32	0	85	117	74	211	123	408	133	0	42	175	1056
04:45 PM	82	133	97	312	16	0	104	120	57	202	117	376	136	0	42	178	986
Total	290	548	436	1274	117	0	373	490	255	827	489	1571	503	0	186	689	4024
05:00 PM	77	171	161	409	26	0	95	121	76	229	118	423	132	0	37	169	1122
05:15 PM	67	150	151	368	26	0	107	133	74	190	81	345	123	0	50	173	1019
05:30 PM	97	129	119	345	26	0	103	129	64	173	146	383	135	0	40	175	1032
05:45 PM	84	115	91	290	34	0	122	156	49	171	138	358	129	0	44	173	977
Total	325	565	522	1412	112	0	427	539	263	763	483	1509	519	0	171	690	4150
Grand Total	615	1113	958	2686	229	0	800	1029	518	1590	972	3080	1022	0	357	1379	8174
Apprch %	22.9	41.4	35.7		22.3	0	77.7		16.8	51.6	31.6		74.1	0	25.9		
Total %	7.5	13.6	11.7	32.9	2.8	0	9.8	12.6	6.3	19.5	11.9	37.7	12.5	0	4.4	16.9	
Passenger Vehicles	583	1062	922	2567	206	0	759	965	508	1551	922	2981	978	0	326	1304	7817
% Passenger Vehicles	94.8	95.4	96.2	95.6	90	0	94.9	93.8	98.1	97.5	94.9	96.8	95.7	0	91.3	94.6	95.6
Large 2 Axle Vehicles	15	29	13	57	4	0	21	25	2	19	16	37	14	0	15	29	148
% Large 2 Axle Vehicles	2.4	2.6	1.4	2.1	1.7	0	2.6	2.4	0.4	1.2	1.6	1.2	1.4	0	4.2	2.1	1.8
3 Axle Vehicles	7	4	1	12	6	0	6	12	1	5	7	13	4	0	5	9	46
% 3 Axle Vehicles	1.1	0.4	0.1	0.4	2.6	0	0.8	1.2	0.2	0.3	0.7	0.4	0.4	0	1.4	0.7	0.6
4+ Axle Trucks	10	18	22	50	13	0	14	27	7	15	27	49	26	0	11	37	163
% 4+ Axle Trucks	1.6	1.6	2.3	1.9	5.7	0	1.8	2.6	1.4	0.9	2.8	1.6	2.5	0	3.1	2.7	2

	Archibald Avenue Southbound				I-10 Ramps Westbound				Archibald Avenue Northbound				I-10 Ramps Eastbound				
Start Time	Left	Thru	Right	App. Total	Left	Thru	Right	App. Total	Left	Thru	Right	App. Total	Left	Thru	Right	App. Total	Int. Total
Peak Hour Analysis From 04:00 PM to 05:45 PM - Peak 1 of 1																	
Peak Hour for Entire Intersection Begins at 04:30 PM																	
04:30 PM	**89**	152	115	356	**32**	0	85	117	74	211	**123**	408	133	0	42	175	1056
04:45 PM	82	133	97	312	16	0	104	120	57	202	117	376	**136**	0	42	**178**	986
05:00 PM	77	**171**	**161**	**409**	26	0	95	121	**76**	**229**	118	**423**	132	0	37	169	**1122**
05:15 PM	67	150	151	368	26	0	**107**	**133**	74	190	81	345	123	0	**50**	173	1019
Total Volume	315	606	524	1445	100	0	391	491	281	832	439	1552	524	0	171	695	4183
% App. Total	21.8	41.9	36.3		20.4	0	79.6		18.1	53.6	28.3		75.4	0	24.6		
PHF	.885	.886	.814	.883	.781	.000	.914	.923	.924	.908	.892	.917	.963	.000	.855	.976	.932

Counts Unlimited, Inc.
PO Box 1178
Corona, CA 92878
(951)268-6268

City of Ontario
N/S: Archibald Avenue
E/W: I-10 Ramps
Weather: Clear

File Name : 02_ONT_Arch_10 PM
Site Code : 00322818
Start Date : 9/20/2022

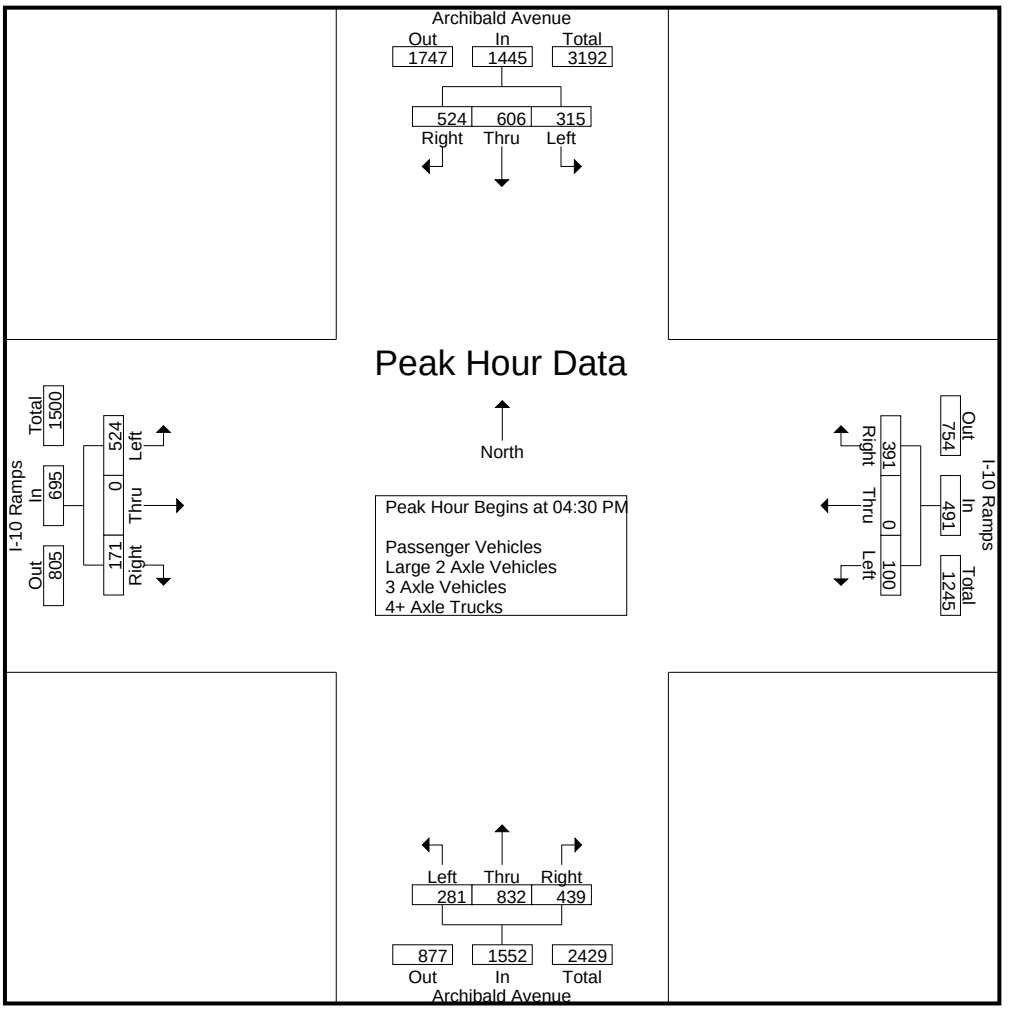

Peak Hour Analysis From 04:00 PM to 05:45 PM - Peak 1 of 1
Peak Hour for Each Approach Begins at:

	04:30 PM				05:00 PM				04:15 PM				04:30 PM			
+0 mins.	**89**	152	115	356	26	0	95	121	66	198	119	383	133	0	42	175
+15 mins.	82	133	97	312	26	0	107	133	74	211	**123**	408	**136**	0	42	**178**
+30 mins.	77	**171**	**161**	**409**	26	0	103	129	57	202	117	376	132	0	37	169
+45 mins.	67	150	151	368	**34**	0	**122**	**156**	**76**	**229**	118	**423**	123	0	**50**	173
Total Volume	315	606	524	1445	112	0	427	539	273	840	477	1590	524	0	171	695
% App. Total	21.8	41.9	36.3		20.8	0	79.2		17.2	52.8	30		75.4	0	24.6	
PHF	.885	.886	.814	.883	.824	.000	.875	.864	.898	.917	.970	.940	.963	.000	.855	.976

Counts Unlimited, Inc.
PO Box 1178
Corona, CA 92878
(951)268-6268

City of Ontario
N/S: Archibald Avenue
E/W: I-10 Ramps
Weather: Clear

File Name : 02_ONT_Arch_10 PM
Site Code : 00322818
Start Date : 9/20/2022
Page No : 1

Groups Printed- Passenger Vehicles

	Archibald Avenue Southbound				I-10 Ramps Westbound				Archibald Avenue Northbound				I-10 Ramps Eastbound				
Start Time	Left	Thru	Right	App. Total	Left	Thru	Right	App. Total	Left	Thru	Right	App. Total	Left	Thru	Right	App. Total	Int. Total
04:00 PM	61	130	113	304	29	0	78	107	57	209	123	389	103	0	54	157	957
04:15 PM	54	119	105	278	32	0	96	128	64	196	116	376	114	0	40	154	936
04:30 PM	85	147	107	339	29	0	76	105	73	208	114	395	128	0	35	163	1002
04:45 PM	75	125	95	295	16	0	99	115	57	195	110	362	131	0	41	172	944
Total	275	521	420	1216	106	0	349	455	251	808	463	1522	476	0	170	646	3839
05:00 PM	74	164	154	392	20	0	91	111	76	224	114	414	128	0	34	162	1079
05:15 PM	63	144	148	355	24	0	101	125	71	184	78	333	118	0	46	164	977
05:30 PM	94	123	113	330	25	0	99	124	62	169	140	371	132	0	37	169	994
05:45 PM	77	110	87	274	31	0	119	150	48	166	127	341	124	0	39	163	928
Total	308	541	502	1351	100	0	410	510	257	743	459	1459	502	0	156	658	3978
Grand Total	583	1062	922	2567	206	0	759	965	508	1551	922	2981	978	0	326	1304	7817
Apprch %	22.7	41.4	35.9		21.3	0	78.7		17	52	30.9		75	0	25		
Total %	7.5	13.6	11.8	32.8	2.6	0	9.7	12.3	6.5	19.8	11.8	38.1	12.5	0	4.2	16.7	

	Archibald Avenue Southbound				I-10 Ramps Westbound				Archibald Avenue Northbound				I-10 Ramps Eastbound				
Start Time	Left	Thru	Right	App. Total	Left	Thru	Right	App. Total	Left	Thru	Right	App. Total	Left	Thru	Right	App. Total	Int. Total
Peak Hour Analysis From 04:30 PM to 05:15 PM - Peak 1 of 1																	
Peak Hour for Entire Intersection Begins at 04:30 PM																	
04:30 PM	**85**	147	107	339	**29**	0	76	105	73	208	**114**	395	128	0	35	163	1002
04:45 PM	75	125	95	295	16	0	99	115	57	195	110	362	**131**	0	41	**172**	944
05:00 PM	74	**164**	**154**	**392**	20	0	91	111	**76**	**224**	114	**414**	128	0	34	162	**1079**
05:15 PM	63	144	148	355	24	0	**101**	**125**	71	184	78	333	118	0	**46**	164	977
Total Volume	297	580	504	1381	89	0	367	456	277	811	416	1504	505	0	156	661	4002
% App. Total	21.5	42	36.5		19.5	0	80.5		18.4	53.9	27.7		76.4	0	23.6		
PHF	.874	.884	.818	.881	.767	.000	.908	.912	.911	.905	.912	.908	.964	.000	.848	.961	.927

Counts Unlimited, Inc.
PO Box 1178
Corona, CA 92878
(951)268-6268

City of Ontario
N/S: Archibald Avenue
E/W: I-10 Ramps
Weather: Clear

File Name : 02_ONT_Arch_10 PM
Site Code : 00322818
Start Date : 9/20/2022
Page No : 2

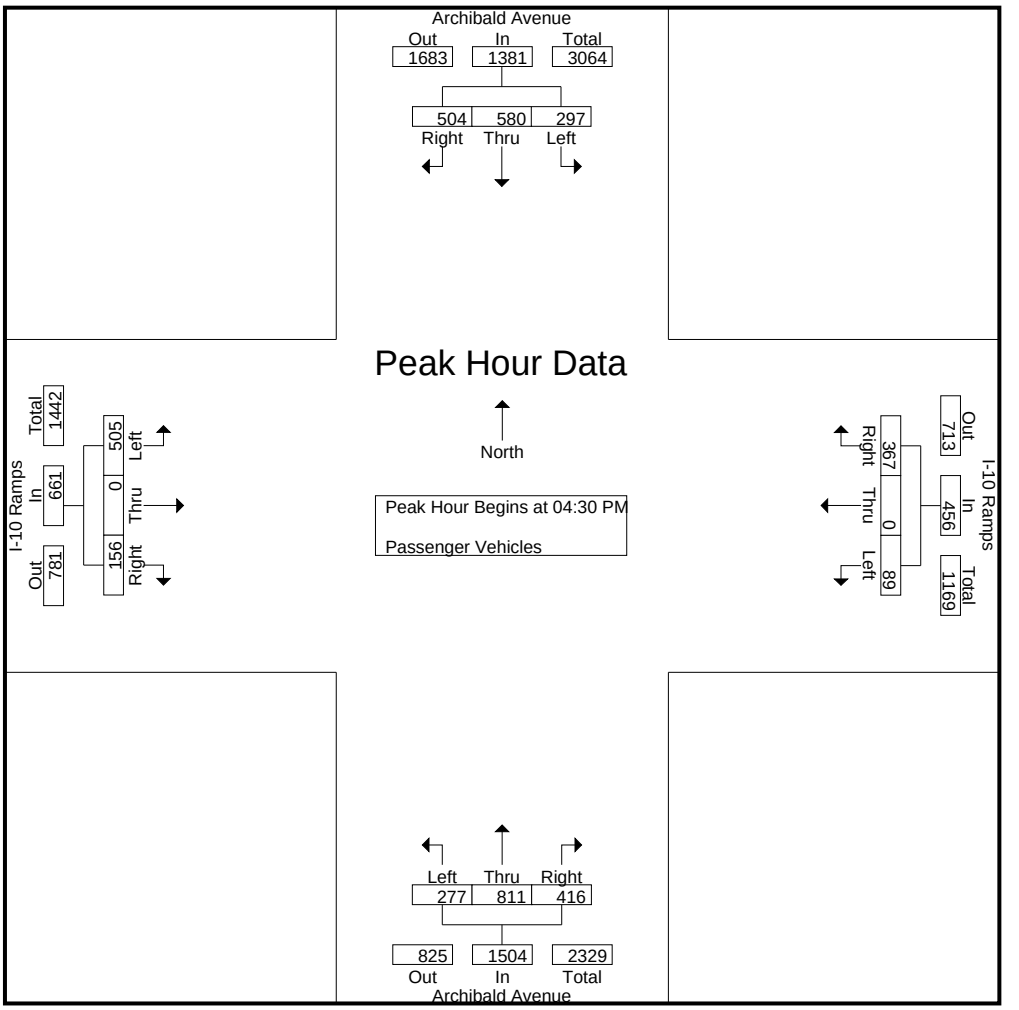

Peak Hour Analysis From 04:30 PM to 05:15 PM - Peak 1 of 1
Peak Hour for Each Approach Begins at:

	04:30 PM				04:30 PM				04:30 PM				04:30 PM			
+0 mins.	**85**	147	107	339	**29**	0	76	105	73	208	**114**	395	128	0	35	163
+15 mins.	75	125	95	295	16	0	99	115	57	195	110	362	**131**	0	41	**172**
+30 mins.	74	**164**	**154**	**392**	20	0	91	111	**76**	**224**	114	**414**	128	0	34	162
+45 mins.	63	144	148	355	24	0	**101**	**125**	71	184	78	333	118	0	**46**	164
Total Volume	297	580	504	1381	89	0	367	456	277	811	416	1504	505	0	156	661
% App. Total	21.5	42	36.5		19.5	0	80.5		18.4	53.9	27.7		76.4	0	23.6	
PHF	.874	.884	.818	.881	.767	.000	.908	.912	.911	.905	.912	.908	.964	.000	.848	.961

Counts Unlimited, Inc.
PO Box 1178
Corona, CA 92878
(951)268-6268

City of Ontario
N/S: Archibald Avenue
E/W: I-10 Ramps
Weather: Clear

File Name : 02_ONT_Arch_10 PM
Site Code : 00322818
Start Date : 9/20/2022
Page No : 1

Groups Printed- Large 2 Axle Vehicles

	Archibald Avenue Southbound				I-10 Ramps Westbound				Archibald Avenue Northbound				I-10 Ramps Eastbound				
Start Time	Left	Thru	Right	App. Total	Left	Thru	Right	App. Total	Left	Thru	Right	App. Total	Left	Thru	Right	App. Total	Int. Total
04:00 PM	1	5	2	8	0	0	1	1	0	4	2	6	5	0	3	8	23
04:15 PM	0	3	1	4	1	0	2	3	0	2	2	4	1	0	1	2	13
04:30 PM	3	3	3	9	1	0	5	6	0	2	2	4	0	0	4	4	23
04:45 PM	5	4	1	10	0	0	3	3	0	2	0	2	3	0	0	3	18
Total	9	15	7	31	2	0	11	13	0	10	6	16	9	0	8	17	77
05:00 PM	3	6	3	12	1	0	4	5	0	2	0	2	2	0	2	4	23
05:15 PM	0	2	1	3	1	0	4	5	1	3	2	6	2	0	3	5	19
05:30 PM	0	4	1	5	0	0	0	0	1	1	2	4	0	0	1	1	10
05:45 PM	3	2	1	6	0	0	2	2	0	3	6	9	1	0	1	2	19
Total	6	14	6	26	2	0	10	12	2	9	10	21	5	0	7	12	71
Grand Total	15	29	13	57	4	0	21	25	2	19	16	37	14	0	15	29	148
Apprch %	26.3	50.9	22.8		16	0	84		5.4	51.4	43.2		48.3	0	51.7		
Total %	10.1	19.6	8.8	38.5	2.7	0	14.2	16.9	1.4	12.8	10.8	25	9.5	0	10.1	19.6	

	Archibald Avenue Southbound				I-10 Ramps Westbound				Archibald Avenue Northbound				I-10 Ramps Eastbound				
Start Time	Left	Thru	Right	App. Total	Left	Thru	Right	App. Total	Left	Thru	Right	App. Total	Left	Thru	Right	App. Total	Int. Total
Peak Hour Analysis From 04:30 PM to 05:15 PM - Peak 1 of 1																	
Peak Hour for Entire Intersection Begins at 04:30 PM																	
04:30 PM	3	3	**3**	9	**1**	0	**5**	**6**	0	2	**2**	4	0	0	**4**	4	**23**
04:45 PM	**5**	4	1	10	0	0	3	3	0	2	0	2	**3**	0	0	3	18
05:00 PM	3	**6**	3	**12**	1	0	4	5	0	2	0	2	2	0	2	4	23
05:15 PM	0	2	1	3	1	0	4	5	**1**	**3**	2	**6**	2	0	3	**5**	19
Total Volume	11	15	8	34	3	0	16	19	1	9	4	14	7	0	9	16	83
% App. Total	32.4	44.1	23.5		15.8	0	84.2		7.1	64.3	28.6		43.8	0	56.2		
PHF	.550	.625	.667	.708	.750	.000	.800	.792	.250	.750	.500	.583	.583	.000	.563	.800	.902

Counts Unlimited, Inc.
PO Box 1178
Corona, CA 92878
(951)268-6268

City of Ontario
N/S: Archibald Avenue
E/W: I-10 Ramps
Weather: Clear

File Name : 02_ONT_Arch_10 PM
Site Code : 00322818
Start Date : 9/20/2022
Page No : 2

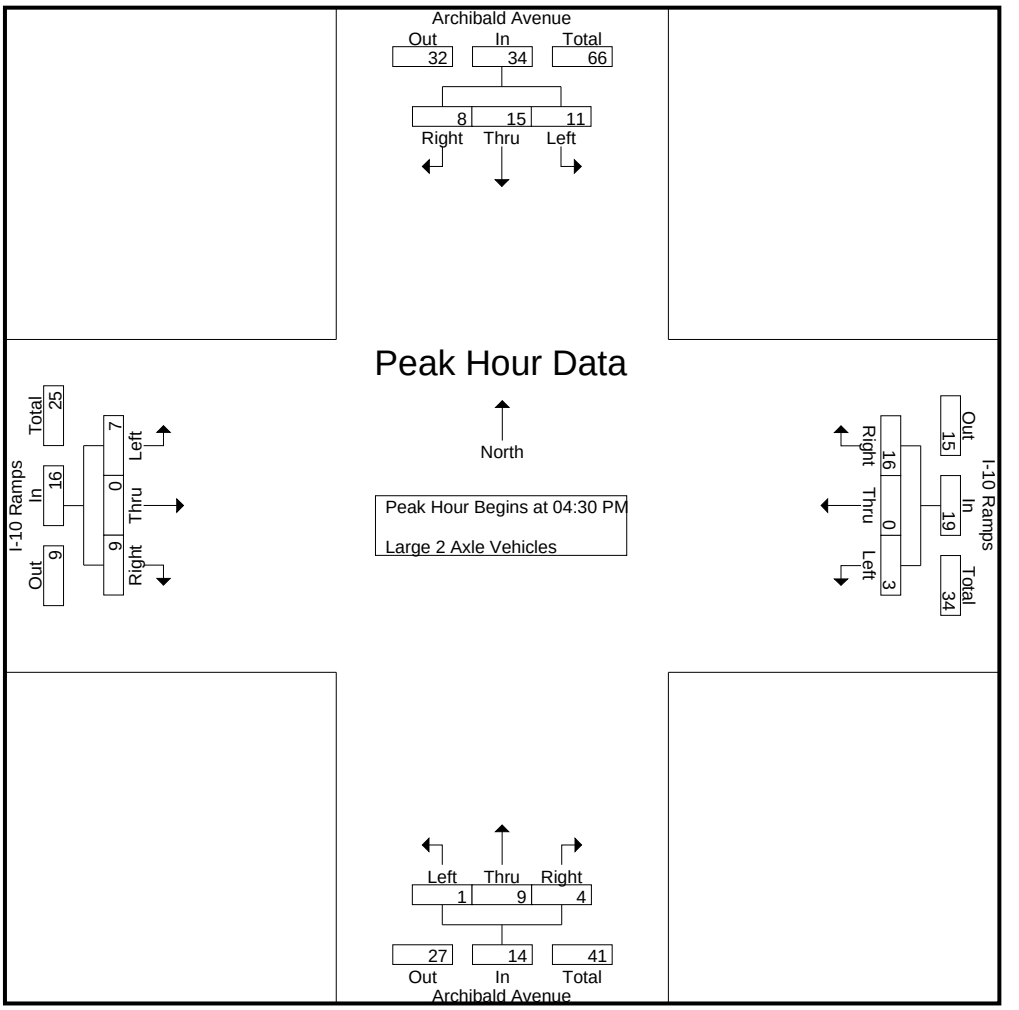

Peak Hour Analysis From 04:30 PM to 05:15 PM - Peak 1 of 1
Peak Hour for Each Approach Begins at:

	04:30 PM				04:30 PM				04:30 PM				04:30 PM			
+0 mins.	3	3	**3**	9	**1**	0	**5**	**6**	0	2	**2**	4	0	0	**4**	4
+15 mins.	**5**	4	1	10	0	0	3	3	0	2	0	2	**3**	0	0	3
+30 mins.	3	**6**	3	**12**	1	0	4	5	0	2	0	2	2	0	2	4
+45 mins.	0	2	1	3	1	0	4	5	**1**	**3**	2	**6**	2	0	3	**5**
Total Volume	11	15	8	34	3	0	16	19	1	9	4	14	7	0	9	16
% App. Total	32.4	44.1	23.5		15.8	0	84.2		7.1	64.3	28.6		43.8	0	56.2	
PHF	.550	.625	.667	.708	.750	.000	.800	.792	.250	.750	.500	.583	.583	.000	.563	.800

Counts Unlimited, Inc.
PO Box 1178
Corona, CA 92878
(951)268-6268

City of Ontario
N/S: Archibald Avenue
E/W: I-10 Ramps
Weather: Clear

File Name : 02_ONT_Arch_10 PM
Site Code : 00322818
Start Date : 9/20/2022
Page No : 1

Groups Printed- 3 Axle Vehicles

	Archibald Avenue Southbound				I-10 Ramps Westbound				Archibald Avenue Northbound				I-10 Ramps Eastbound				
Start Time	Left	Thru	Right	App. Total	Left	Thru	Right	App. Total	Left	Thru	Right	App. Total	Left	Thru	Right	App. Total	Int. Total
04:00 PM	0	1	0	1	1	0	0	1	0	2	3	5	1	0	0	1	8
04:15 PM	0	0	0	0	1	0	0	1	0	0	0	0	0	0	1	1	2
04:30 PM	0	0	1	1	1	0	1	2	0	0	0	0	1	0	2	3	6
04:45 PM	1	1	0	2	0	0	0	0	0	1	1	2	0	0	0	0	4
Total	1	2	1	4	3	0	1	4	0	3	4	7	2	0	3	5	20
05:00 PM	0	0	0	0	3	0	0	3	0	0	1	1	0	0	0	0	4
05:15 PM	2	1	0	3	0	0	1	1	0	1	0	1	0	0	0	0	5
05:30 PM	1	0	0	1	0	0	3	3	0	1	1	2	1	0	1	2	8
05:45 PM	3	1	0	4	0	0	1	1	1	0	1	2	1	0	1	2	9
Total	6	2	0	8	3	0	5	8	1	2	3	6	2	0	2	4	26
Grand Total	7	4	1	12	6	0	6	12	1	5	7	13	4	0	5	9	46
Apprch %	58.3	33.3	8.3		50	0	50		7.7	38.5	53.8		44.4	0	55.6		
Total %	15.2	8.7	2.2	26.1	13	0	13	26.1	2.2	10.9	15.2	28.3	8.7	0	10.9	19.6	

	Archibald Avenue Southbound				I-10 Ramps Westbound				Archibald Avenue Northbound				I-10 Ramps Eastbound				
Start Time	Left	Thru	Right	App. Total	Left	Thru	Right	App. Total	Left	Thru	Right	App. Total	Left	Thru	Right	App. Total	Int. Total
Peak Hour Analysis From 04:30 PM to 05:15 PM - Peak 1 of 1																	
Peak Hour for Entire Intersection Begins at 04:30 PM																	
04:30 PM	0	0	**1**	1	1	0	**1**	2	0	0	0	0	**1**	0	**2**	**3**	**6**
04:45 PM	1	**1**	0	2	0	0	0	0	0	**1**	**1**	**2**	0	0	0	0	4
05:00 PM	0	0	0	0	**3**	0	0	**3**	0	0	1	1	0	0	0	0	4
05:15 PM	**2**	1	0	**3**	0	0	1	1	0	1	0	1	0	0	0	0	5
Total Volume	3	2	1	6	4	0	2	6	0	2	2	4	1	0	2	3	19
% App. Total	50	33.3	16.7		66.7	0	33.3		0	50	50		33.3	0	66.7		
PHF	.375	.500	.250	.500	.333	.000	.500	.500	.000	.500	.500	.500	.250	.000	.250	.250	.792

Counts Unlimited, Inc.
PO Box 1178
Corona, CA 92878
(951)268-6268

City of Ontario
N/S: Archibald Avenue
E/W: I-10 Ramps
Weather: Clear

File Name : 02_ONT_Arch_10 PM
Site Code : 00322818
Start Date : 9/20/2022
Page No : 2

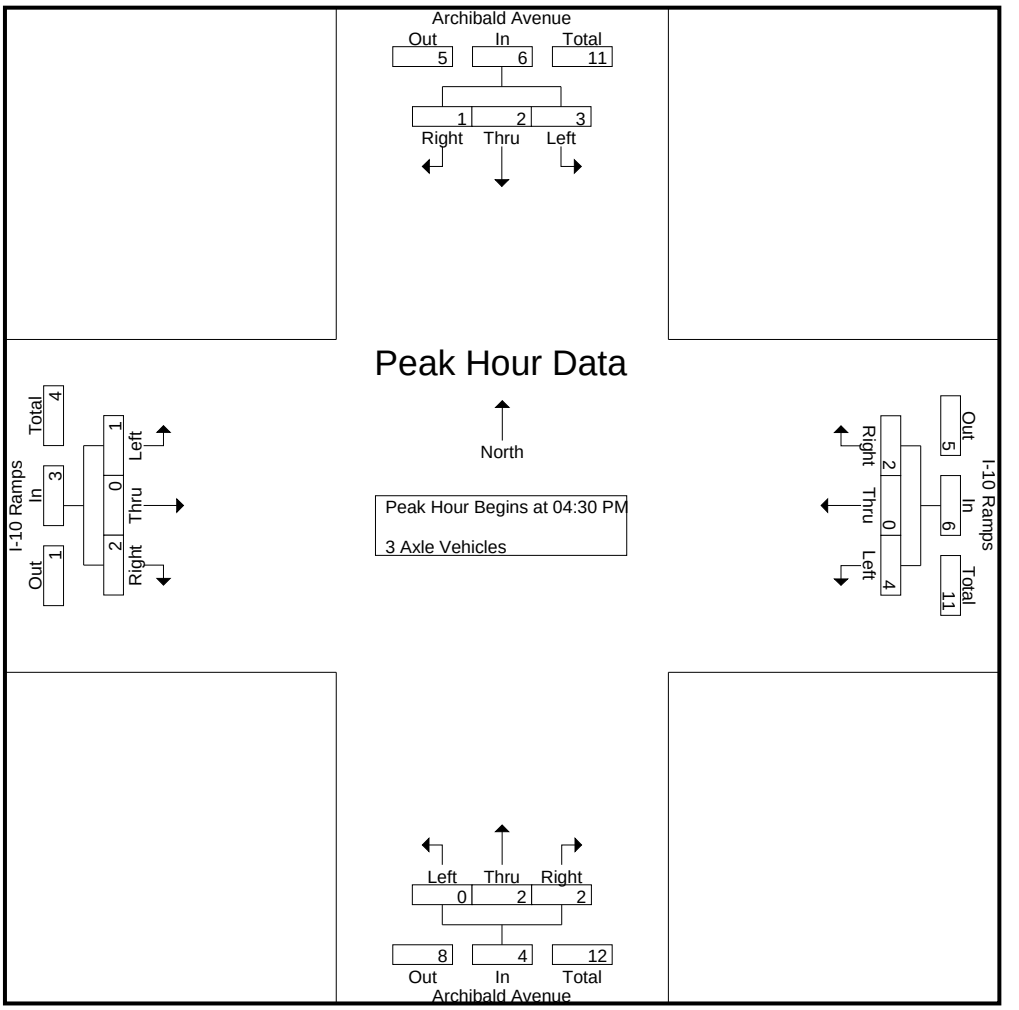

Peak Hour Analysis From 04:30 PM to 05:15 PM - Peak 1 of 1
Peak Hour for Each Approach Begins at:

	04:30 PM				04:30 PM				04:30 PM				04:30 PM			
+0 mins.	0	0	**1**	1	1	0	**1**	2	0	0	0	0	**1**	0	**2**	**3**
+15 mins.	1	**1**	0	2	0	0	0	0	0	**1**	**1**	**2**	0	0	0	0
+30 mins.	0	0	0	0	**3**	0	0	**3**	0	0	1	1	0	0	0	0
+45 mins.	**2**	1	0	**3**	0	0	1	1	0	1	0	1	0	0	0	0
Total Volume	3	2	1	6	4	0	2	6	0	2	2	4	1	0	2	3
% App. Total	50	33.3	16.7		66.7	0	33.3		0	50	50		33.3	0	66.7	
PHF	.375	.500	.250	.500	.333	.000	.500	.500	.000	.500	.500	.500	.250	.000	.250	.250

Counts Unlimited, Inc.
PO Box 1178
Corona, CA 92878
(951)268-6268

City of Ontario
N/S: Archibald Avenue
E/W: I-10 Ramps
Weather: Clear

File Name : 02_ONT_Arch_10 PM
Site Code : 00322818
Start Date : 9/20/2022
Page No : 1

Groups Printed- 4+ Axle Trucks

	Archibald Avenue Southbound				I-10 Ramps Westbound				Archibald Avenue Northbound				I-10 Ramps Eastbound				
Start Time	Left	Thru	Right	App. Total	Left	Thru	Right	App. Total	Left	Thru	Right	App. Total	Left	Thru	Right	App. Total	Int. Total
04:00 PM	2	0	2	4	3	0	2	5	1	1	2	4	3	0	0	3	16
04:15 PM	1	5	1	7	2	0	5	7	2	0	1	3	7	0	3	10	27
04:30 PM	1	2	4	7	1	0	3	4	1	1	7	9	4	0	1	5	25
04:45 PM	1	3	1	5	0	0	2	2	0	4	6	10	2	0	1	3	20
Total	5	10	8	23	6	0	12	18	4	6	16	26	16	0	5	21	88
05:00 PM	0	1	4	5	2	0	0	2	0	3	3	6	2	0	1	3	16
05:15 PM	2	3	2	7	1	0	1	2	2	2	1	5	3	0	1	4	18
05:30 PM	2	2	5	9	1	0	1	2	1	2	3	6	2	0	1	3	20
05:45 PM	1	2	3	6	3	0	0	3	0	2	4	6	3	0	3	6	21
Total	5	8	14	27	7	0	2	9	3	9	11	23	10	0	6	16	75
Grand Total	10	18	22	50	13	0	14	27	7	15	27	49	26	0	11	37	163
Apprch %	20	36	44		48.1	0	51.9		14.3	30.6	55.1		70.3	0	29.7		
Total %	6.1	11	13.5	30.7	8	0	8.6	16.6	4.3	9.2	16.6	30.1	16	0	6.7	22.7	

	Archibald Avenue Southbound				I-10 Ramps Westbound				Archibald Avenue Northbound				I-10 Ramps Eastbound				
Start Time	Left	Thru	Right	App. Total	Left	Thru	Right	App. Total	Left	Thru	Right	App. Total	Left	Thru	Right	App. Total	Int. Total
Peak Hour Analysis From 04:30 PM to 05:15 PM - Peak 1 of 1																	
Peak Hour for Entire Intersection Begins at 04:30 PM																	
04:30 PM	1	2	**4**	**7**	1	0	**3**	**4**	1	1	**7**	9	**4**	0	**1**	**5**	**25**
04:45 PM	1	**3**	1	5	0	0	2	2	0	**4**	6	**10**	2	0	1	3	20
05:00 PM	0	1	4	5	**2**	0	0	2	0	3	3	6	2	0	1	3	16
05:15 PM	**2**	3	2	7	1	0	1	2	**2**	2	1	5	3	0	1	4	18
Total Volume	4	9	11	24	4	0	6	10	3	10	17	30	11	0	4	15	79
% App. Total	16.7	37.5	45.8		40	0	60		10	33.3	56.7		73.3	0	26.7		
PHF	.500	.750	.688	.857	.500	.000	.500	.625	.375	.625	.607	.750	.688	.000	1.00	.750	.790

Counts Unlimited, Inc.
PO Box 1178
Corona, CA 92878
(951)268-6268

City of Ontario
N/S: Archibald Avenue
E/W: I-10 Ramps
Weather: Clear

File Name : 02_ONT_Arch_10 PM
Site Code : 00322818
Start Date : 9/20/2022
Page No : 2

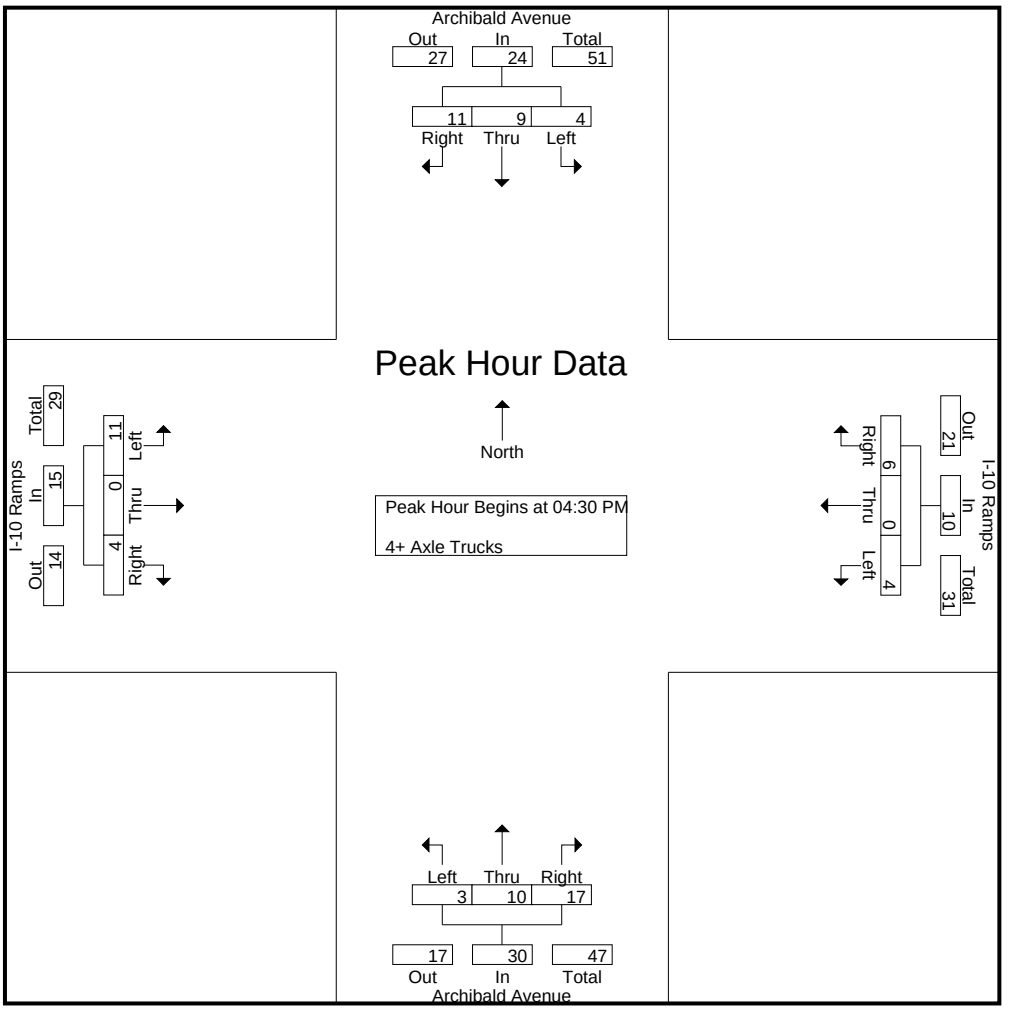

Peak Hour Analysis From 04:30 PM to 05:15 PM - Peak 1 of 1
Peak Hour for Each Approach Begins at:

	04:30 PM				04:30 PM				04:30 PM				04:30 PM			
+0 mins.	1	2	**4**	**7**	1	0	**3**	**4**	1	1	**7**	9	**4**	0	**1**	**5**
+15 mins.	1	**3**	1	5	0	0	2	2	0	**4**	6	**10**	2	0	1	3
+30 mins.	0	1	4	5	**2**	0	0	2	0	3	3	6	2	0	1	3
+45 mins.	**2**	3	2	7	1	0	1	2	**2**	2	1	5	3	0	1	4
Total Volume	4	9	11	24	4	0	6	10	3	10	17	30	11	0	4	15
% App. Total	16.7	37.5	45.8		40	0	60		10	33.3	56.7		73.3	0	26.7	
PHF	.500	.750	.688	.857	.500	.000	.500	.625	.375	.625	.607	.750	.688	.000	1.000	.750

Location: Ontario
N/S: Archibald Avenue
E/W: I-10 Ramps

Date: 9/20/2022
Day: Tuesday

PEDESTRIANS

	North Leg Archibald Avenue	East Leg I-10 Ramps	South Leg Archibald Avenue	West Leg I-10 Ramps	
	Pedestrians	Pedestrians	Pedestrians	Pedestrians	
7:00 AM	0	0	0	1	1
7:15 AM	0	0	0	0	0
7:30 AM	0	0	0	0	0
7:45 AM	0	1	0	1	2
8:00 AM	0	2	0	1	3
8:15 AM	0	0	0	0	0
8:30 AM	0	0	0	0	0
8:45 AM	0	0	0	0	0
TOTAL VOLUMES:	0	3	0	3	6

	North Leg Archibald Avenue	East Leg I-10 Ramps	South Leg Archibald Avenue	West Leg I-10 Ramps	
	Pedestrians	Pedestrians	Pedestrians	Pedestrians	
4:00 PM	0	0	0	0	0
4:15 PM	0	0	0	2	2
4:30 PM	0	2	0	0	2
4:45 PM	0	0	0	0	0
5:00 PM	0	0	0	2	2
5:15 PM	0	0	0	0	0
5:30 PM	0	0	0	0	0
5:45 PM	0	0	0	2	2
TOTAL VOLUMES:	0	2	0	6	8

Counts Unlimited, Inc.
PO Box 1178
Corona, CA 92878
951-268-6268

Location: Ontario
N/S: Archibald Avenue
E/W: I-10 Ramps

Date: 9/20/2022
Day: Tuesday

BICYCLES

	Southbound Archibald Avenue			Westbound I-10 Ramps			Northbound Archibald Avenue			Eastbound I-10 Ramps			
	Left	Thru	Right	Left	Thru	Right	Left	Thru	Right	Left	Thru	Right	
7:00 AM	0	0	0	0	0	0	0	0	0	0	0	0	0
7:15 AM	0	0	0	0	0	0	0	0	0	0	0	0	0
7:30 AM	0	0	0	0	0	0	0	0	0	0	0	0	0
7:45 AM	0	0	0	0	0	0	0	0	0	0	0	0	0
8:00 AM	0	0	0	0	0	0	0	0	0	0	0	0	0
8:15 AM	0	0	0	0	0	0	0	0	0	0	0	0	0
8:30 AM	0	0	0	0	0	0	0	0	0	0	0	0	0
8:45 AM	0	0	0	0	0	0	0	0	0	0	0	0	0
TOTAL VOLUMES:	0	0	0	0	0	0	0	0	0	0	0	0	0

	Southbound Archibald Avenue			Westbound I-10 Ramps			Northbound Archibald Avenue			Eastbound I-10 Ramps			
	Left	Thru	Right	Left	Thru	Right	Left	Thru	Right	Left	Thru	Right	
4:00 PM	0	0	0	0	0	0	0	0	0	0	0	0	0
4:15 PM	0	0	0	0	0	0	0	0	0	0	0	0	0
4:30 PM	0	0	0	0	0	0	0	0	0	0	0	0	0
4:45 PM	0	1	0	0	0	0	0	0	0	0	0	0	1
5:00 PM	0	0	0	0	0	0	0	0	0	0	0	0	0
5:15 PM	0	0	0	0	0	0	0	1	0	0	0	0	1
5:30 PM	0	0	0	0	0	0	0	0	0	0	0	0	0
5:45 PM	0	0	0	0	0	0	0	0	0	0	0	0	0
TOTAL VOLUMES:	0	1	0	0	0	0	0	1	0	0	0	0	2

Counts Unlimited, Inc.
PO Box 1178
Corona, CA 92878
951-268-6268

Counts Unlimited, Inc.
PO Box 1178
Corona, CA 92878
(951)268-6268

City of Ontario
N/S: Archibald Avenue
E/W: Guasti Road
Weather: Clear

File Name : 03_ONT_Arch_Gua AM
Site Code : 00322818
Start Date : 9/20/2022
Page No : 1

Groups Printed- Passenger Vehicles - Large 2 Axle Vehicles - 3 Axle Vehicles - 4+ Axle Trucks

	Archibald Avenue Southbound				Guasti Road Westbound				Archibald Avenue Northbound				Guasti Road Eastbound				
Start Time	Left	Thru	Right	App. Total	Left	Thru	Right	App. Total	Left	Thru	Right	App. Total	Left	Thru	Right	App. Total	Int. Total
07:00 AM	30	141	29	200	2	7	10	19	11	93	6	110	43	17	11	71	400
07:15 AM	30	162	22	214	1	4	9	14	4	101	8	113	59	26	5	90	431
07:30 AM	49	169	36	254	3	10	12	25	7	158	13	178	48	20	4	72	529
07:45 AM	96	190	25	311	3	9	9	21	19	170	17	206	61	34	4	99	637
Total	205	662	112	979	9	30	40	79	41	522	44	607	211	97	24	332	1997
08:00 AM	75	157	40	272	4	12	16	32	16	152	20	188	68	29	5	102	594
08:15 AM	67	170	19	256	7	9	14	30	3	166	24	193	65	23	2	90	569
08:30 AM	71	126	22	219	4	4	15	23	7	159	8	174	41	25	3	69	485
08:45 AM	54	154	29	237	4	11	12	27	9	163	11	183	38	14	8	60	507
Total	267	607	110	984	19	36	57	112	35	640	63	738	212	91	18	321	2155
Grand Total	472	1269	222	1963	28	66	97	191	76	1162	107	1345	423	188	42	653	4152
Apprch %	24	64.6	11.3		14.7	34.6	50.8		5.7	86.4	8		64.8	28.8	6.4		
Total %	11.4	30.6	5.3	47.3	0.7	1.6	2.3	4.6	1.8	28	2.6	32.4	10.2	4.5	1	15.7	
Passenger Vehicles	451	1236	198	1885	27	63	95	185	70	1111	107	1288	364	177	39	580	3938
% Passenger Vehicles	95.6	97.4	89.2	96	96.4	95.5	97.9	96.9	92.1	95.6	100	95.8	86.1	94.1	92.9	88.8	94.8
Large 2 Axle Vehicles	1	18	6	25	0	1	0	1	2	24	0	26	18	7	2	27	79
% Large 2 Axle Vehicles	0.2	1.4	2.7	1.3	0	1.5	0	0.5	2.6	2.1	0	1.9	4.3	3.7	4.8	4.1	1.9
3 Axle Vehicles	15	4	5	24	0	1	0	1	1	8	0	9	16	3	0	19	53
% 3 Axle Vehicles	3.2	0.3	2.3	1.2	0	1.5	0	0.5	1.3	0.7	0	0.7	3.8	1.6	0	2.9	1.3
4+ Axle Trucks	5	11	13	29	1	1	2	4	3	19	0	22	25	1	1	27	82
% 4+ Axle Trucks	1.1	0.9	5.9	1.5	3.6	1.5	2.1	2.1	3.9	1.6	0	1.6	5.9	0.5	2.4	4.1	2

	Archibald Avenue Southbound				Guasti Road Westbound				Archibald Avenue Northbound				Guasti Road Eastbound				
Start Time	Left	Thru	Right	App. Total	Left	Thru	Right	App. Total	Left	Thru	Right	App. Total	Left	Thru	Right	App. Total	Int. Total
Peak Hour Analysis From 07:00 AM to 08:45 AM - Peak 1 of 1																	
Peak Hour for Entire Intersection Begins at 07:30 AM																	
07:30 AM	49	169	36	254	3	10	12	25	7	158	13	178	48	20	4	72	529
07:45 AM	**96**	**190**	25	**311**	3	9	9	21	**19**	**170**	17	**206**	61	**34**	4	99	**637**
08:00 AM	75	157	**40**	272	4	**12**	**16**	**32**	16	152	20	188	**68**	29	**5**	**102**	594
08:15 AM	67	170	19	256	**7**	9	14	30	3	166	**24**	193	65	23	2	90	569
Total Volume	287	686	120	1093	17	40	51	108	45	646	74	765	242	106	15	363	2329
% App. Total	26.3	62.8	11		15.7	37	47.2		5.9	84.4	9.7		66.7	29.2	4.1		
PHF	.747	.903	.750	.879	.607	.833	.797	.844	.592	.950	.771	.928	.890	.779	.750	.890	.914

Counts Unlimited, Inc.
PO Box 1178
Corona, CA 92878
(951)268-6268

City of Ontario
N/S: Archibald Avenue
E/W: Guasti Road
Weather: Clear

File Name : 03_ONT_Arch_Gua AM
Site Code : 00322818
Start Date : 9/20/2022
Page No : 2

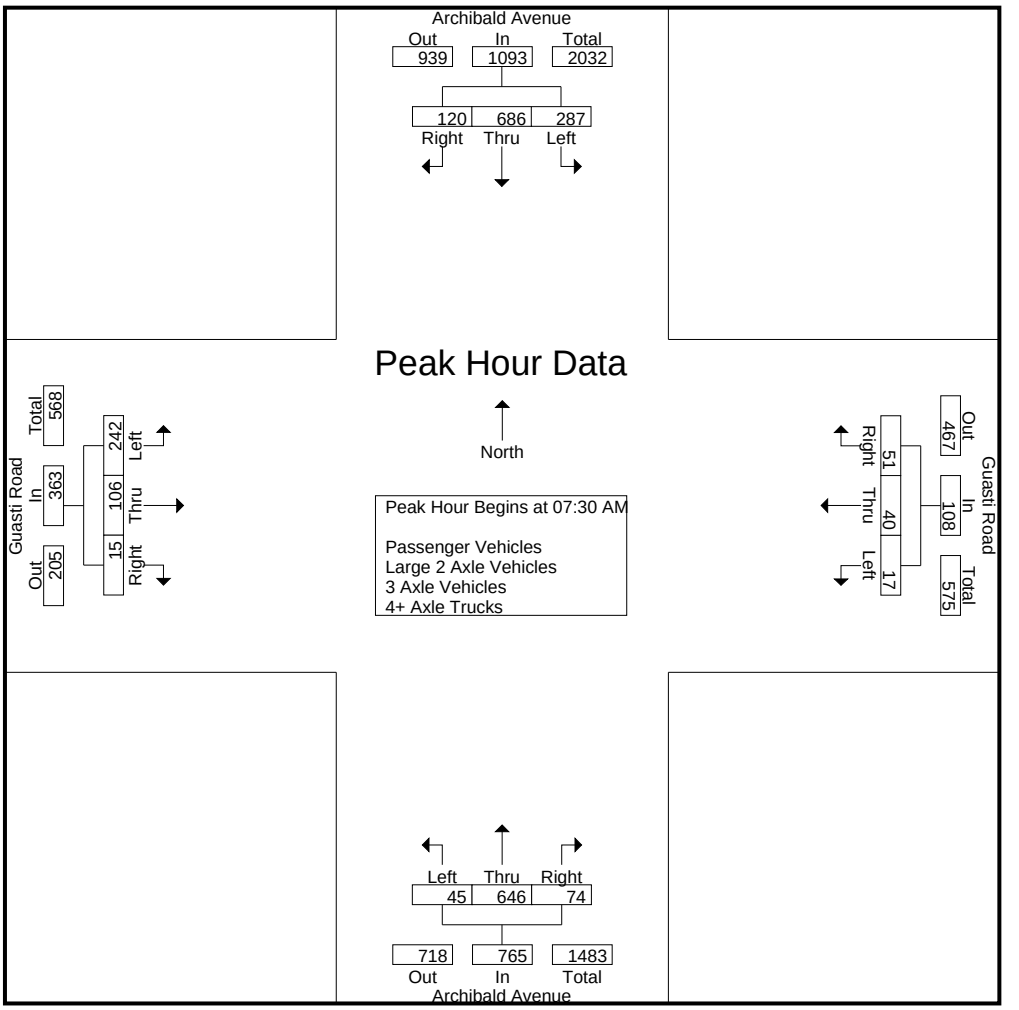

Peak Hour Analysis From 07:00 AM to 08:45 AM - Peak 1 of 1
Peak Hour for Each Approach Begins at:

	07:30 AM				08:00 AM				07:30 AM				07:15 AM			
+0 mins.	49	169	36	254	4	**12**	**16**	**32**	7	158	13	178	59	26	**5**	90
+15 mins.	**96**	**190**	25	**311**	**7**	9	14	30	**19**	**170**	17	**206**	48	20	4	72
+30 mins.	75	157	**40**	272	4	4	15	23	16	152	20	188	61	**34**	4	99
+45 mins.	67	170	19	256	4	11	12	27	3	166	**24**	193	**68**	29	5	**102**
Total Volume	287	686	120	1093	19	36	57	112	45	646	74	765	236	109	18	363
% App. Total	26.3	62.8	11		17	32.1	50.9		5.9	84.4	9.7		65	30	5	
PHF	.747	.903	.750	.879	.679	.750	.891	.875	.592	.950	.771	.928	.868	.801	.900	.890

Counts Unlimited, Inc.
PO Box 1178
Corona, CA 92878
(951)268-6268

City of Ontario
N/S: Archibald Avenue
E/W: Guasti Road
Weather: Clear

File Name : 03_ONT_Arch_Gua AM
Site Code : 00322818
Start Date : 9/20/2022
Page No : 1

Groups Printed- Passenger Vehicles

	Archibald Avenue Southbound				Guasti Road Westbound				Archibald Avenue Northbound				Guasti Road Eastbound				
Start Time	Left	Thru	Right	App. Total	Left	Thru	Right	App. Total	Left	Thru	Right	App. Total	Left	Thru	Right	App. Total	Int. Total
07:00 AM	29	137	26	192	2	7	10	19	11	87	6	104	33	14	10	57	372
07:15 AM	30	157	15	202	1	4	9	14	3	95	8	106	53	25	5	83	405
07:30 AM	47	167	31	245	3	9	10	22	7	156	13	176	41	19	4	64	507
07:45 AM	95	185	23	303	3	9	9	21	17	164	17	198	54	29	3	86	608
Total	201	646	95	942	9	29	38	76	38	502	44	584	181	87	22	290	1892
08:00 AM	73	154	38	265	4	11	16	31	15	145	20	180	61	28	4	93	569
08:15 AM	63	166	16	245	7	9	14	30	3	159	24	186	59	23	2	84	545
08:30 AM	65	120	21	206	3	4	15	22	7	152	8	167	34	25	3	62	457
08:45 AM	49	150	28	227	4	10	12	26	7	153	11	171	29	14	8	51	475
Total	250	590	103	943	18	34	57	109	32	609	63	704	183	90	17	290	2046
Grand Total	451	1236	198	1885	27	63	95	185	70	1111	107	1288	364	177	39	580	3938
Apprch %	23.9	65.6	10.5		14.6	34.1	51.4		5.4	86.3	8.3		62.8	30.5	6.7		
Total %	11.5	31.4	5	47.9	0.7	1.6	2.4	4.7	1.8	28.2	2.7	32.7	9.2	4.5	1	14.7	

	Archibald Avenue Southbound				Guasti Road Westbound				Archibald Avenue Northbound				Guasti Road Eastbound				
Start Time	Left	Thru	Right	App. Total	Left	Thru	Right	App. Total	Left	Thru	Right	App. Total	Left	Thru	Right	App. Total	Int. Total
Peak Hour Analysis From 07:30 AM to 08:15 AM - Peak 1 of 1																	
Peak Hour for Entire Intersection Begins at 07:30 AM																	
07:30 AM	47	167	31	245	3	9	10	22	7	156	13	176	41	19	**4**	64	507
07:45 AM	**95**	**185**	23	**303**	3	9	9	21	**17**	**164**	17	**198**	54	**29**	3	86	**608**
08:00 AM	73	154	**38**	265	4	**11**	**16**	**31**	15	145	20	180	**61**	28	4	**93**	569
08:15 AM	63	166	16	245	**7**	9	14	30	3	159	**24**	186	59	23	2	84	545
Total Volume	278	672	108	1058	17	38	49	104	42	624	74	740	215	99	13	327	2229
% App. Total	26.3	63.5	10.2		16.3	36.5	47.1		5.7	84.3	10		65.7	30.3	4		
PHF	.732	.908	.711	.873	.607	.864	.766	.839	.618	.951	.771	.934	.881	.853	.813	.879	.917

Counts Unlimited, Inc.
PO Box 1178
Corona, CA 92878
(951)268-6268

City of Ontario
N/S: Archibald Avenue
E/W: Guasti Road
Weather: Clear

File Name : 03_ONT_Arch_Gua AM
Site Code : 00322818
Start Date : 9/20/2022
Page No : 2

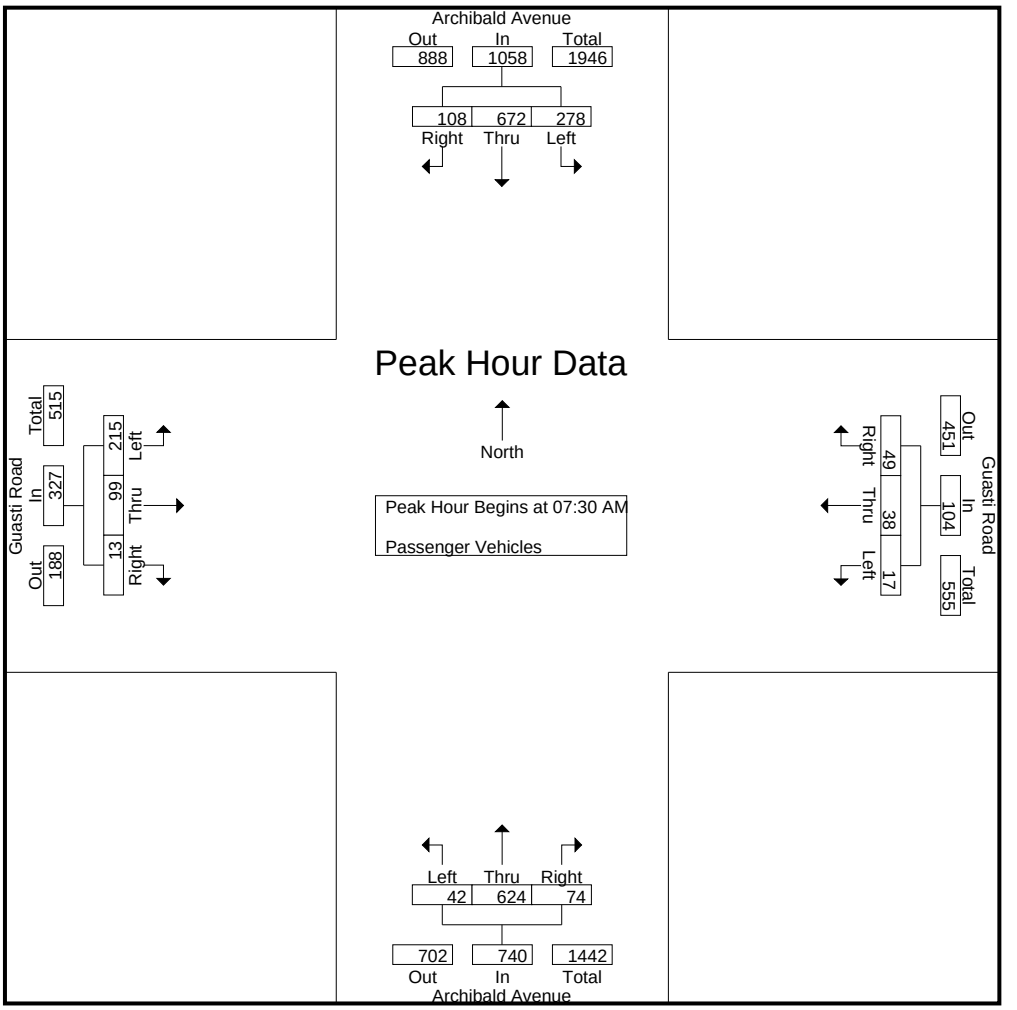

Peak Hour Analysis From 07:30 AM to 08:15 AM - Peak 1 of 1
Peak Hour for Each Approach Begins at:

	07:30 AM				07:30 AM				07:30 AM				07:30 AM			
+0 mins.	47	167	31	245	3	9	10	22	7	156	13	176	41	19	**4**	64
+15 mins.	**95**	**185**	23	**303**	3	9	9	21	**17**	**164**	17	**198**	54	**29**	3	86
+30 mins.	73	154	**38**	265	4	**11**	**16**	**31**	15	145	20	180	**61**	28	4	**93**
+45 mins.	63	166	16	245	**7**	9	14	30	3	159	**24**	186	59	23	2	84
Total Volume	278	672	108	1058	17	38	49	104	42	624	74	740	215	99	13	327
% App. Total	26.3	63.5	10.2		16.3	36.5	47.1		5.7	84.3	10		65.7	30.3	4	
PHF	.732	.908	.711	.873	.607	.864	.766	.839	.618	.951	.771	.934	.881	.853	.813	.879

Counts Unlimited, Inc.
PO Box 1178
Corona, CA 92878
(951)268-6268

City of Ontario
N/S: Archibald Avenue
E/W: Guasti Road
Weather: Clear

File Name : 03_ONT_Arch_Gua AM
Site Code : 00322818
Start Date : 9/20/2022
Page No : 1

Groups Printed- Large 2 Axle Vehicles

	Archibald Avenue Southbound				Guasti Road Westbound				Archibald Avenue Northbound				Guasti Road Eastbound				
Start Time	Left	Thru	Right	App. Total	Left	Thru	Right	App. Total	Left	Thru	Right	App. Total	Left	Thru	Right	App. Total	Int. Total
07:00 AM	0	2	0	2	0	0	0	0	0	3	0	3	1	3	1	5	10
07:15 AM	0	4	2	6	0	0	0	0	0	2	0	2	4	1	0	5	13
07:30 AM	0	2	1	3	0	0	0	0	0	1	0	1	1	0	0	1	5
07:45 AM	0	3	1	4	0	0	0	0	1	2	0	3	4	2	0	6	13
Total	0	11	4	15	0	0	0	0	1	8	0	9	10	6	1	17	41
08:00 AM	0	0	0	0	0	0	0	0	1	4	0	5	2	1	1	4	9
08:15 AM	0	3	2	5	0	0	0	0	0	4	0	4	2	0	0	2	11
08:30 AM	0	2	0	2	0	0	0	0	0	3	0	3	2	0	0	2	7
08:45 AM	1	2	0	3	0	1	0	1	0	5	0	5	2	0	0	2	11
Total	1	7	2	10	0	1	0	1	1	16	0	17	8	1	1	10	38
Grand Total	1	18	6	25	0	1	0	1	2	24	0	26	18	7	2	27	79
Apprch %	4	72	24		0	100	0		7.7	92.3	0		66.7	25.9	7.4		
Total %	1.3	22.8	7.6	31.6	0	1.3	0	1.3	2.5	30.4	0	32.9	22.8	8.9	2.5	34.2	

	Archibald Avenue Southbound				Guasti Road Westbound				Archibald Avenue Northbound				Guasti Road Eastbound				
Start Time	Left	Thru	Right	App. Total	Left	Thru	Right	App. Total	Left	Thru	Right	App. Total	Left	Thru	Right	App. Total	Int. Total
Peak Hour Analysis From 07:30 AM to 08:15 AM - Peak 1 of 1																	
Peak Hour for Entire Intersection Begins at 07:30 AM																	
07:30 AM	0	2	1	3	0	0	0	0	0	1	0	1	1	0	0	1	5
07:45 AM	0	**3**	1	4	0	0	0	0	**1**	2	0	3	**4**	**2**	0	**6**	**13**
08:00 AM	0	0	0	0	0	0	0	0	1	**4**	0	**5**	2	1	**1**	4	9
08:15 AM	0	3	**2**	**5**	0	0	0	0	0	4	0	4	2	0	0	2	11
Total Volume	0	8	4	12	0	0	0	0	2	11	0	13	9	3	1	13	38
% App. Total	0	66.7	33.3		0	0	0		15.4	84.6	0		69.2	23.1	7.7		
PHF	.000	.667	.500	.600	.000	.000	.000	.000	.500	.688	.000	.650	.563	.375	.250	.542	.731

Counts Unlimited, Inc.
PO Box 1178
Corona, CA 92878
(951)268-6268

City of Ontario
N/S: Archibald Avenue
E/W: Guasti Road
Weather: Clear

File Name : 03_ONT_Arch_Gua AM
Site Code : 00322818
Start Date : 9/20/2022
Page No : 2

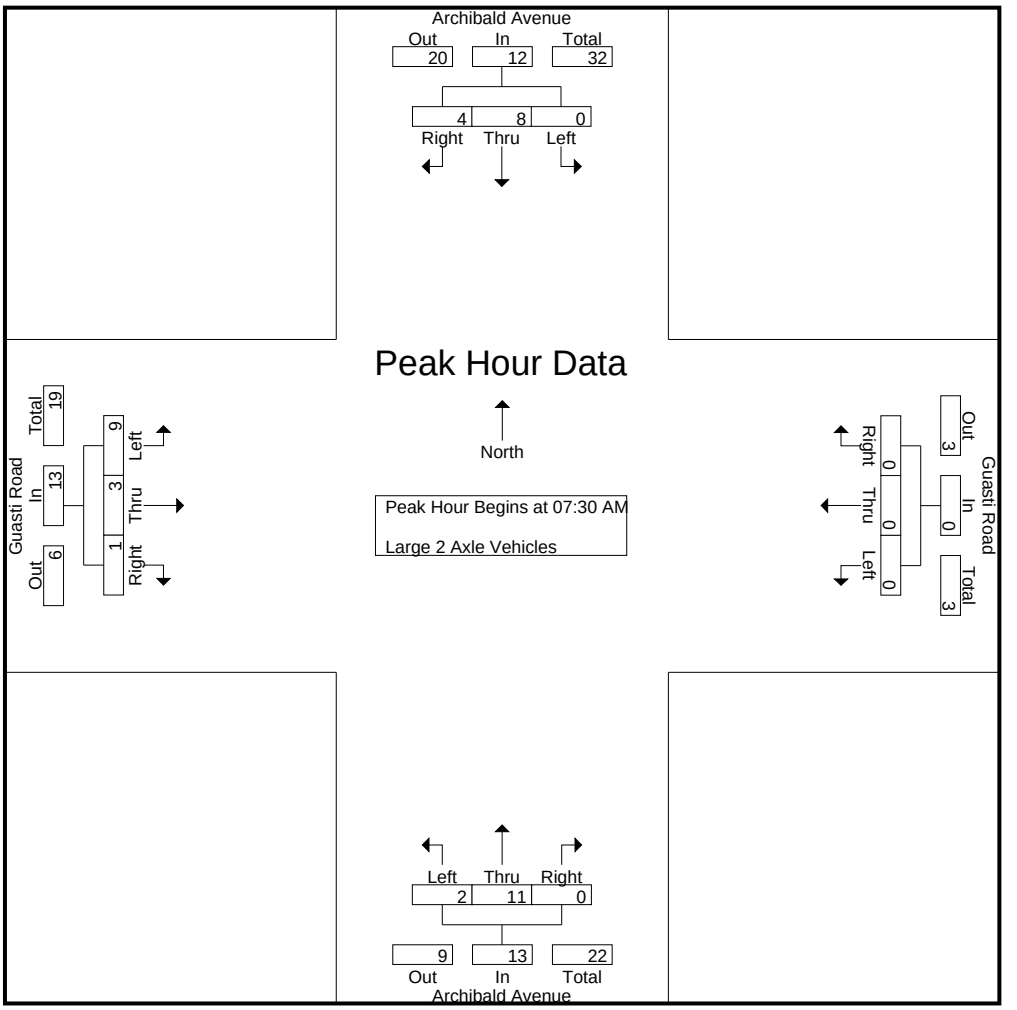

Peak Hour Analysis From 07:30 AM to 08:15 AM - Peak 1 of 1
Peak Hour for Each Approach Begins at:

	07:30 AM				07:30 AM				07:30 AM				07:30 AM			
+0 mins.	0	2	1	3	0	0	0	0	0	1	0	1	1	0	0	1
+15 mins.	0	**3**	1	4	0	0	0	0	**1**	2	0	3	**4**	**2**	0	**6**
+30 mins.	0	0	0	0	0	0	0	0	1	**4**	0	**5**	2	1	**1**	4
+45 mins.	0	3	**2**	**5**	0	0	0	0	0	4	0	4	2	0	0	2
Total Volume	0	8	4	12	0	0	0	0	2	11	0	13	9	3	1	13
% App. Total	0	66.7	33.3		0	0	0		15.4	84.6	0		69.2	23.1	7.7	
PHF	.000	.667	.500	.600	.000	.000	.000	.000	.500	.688	.000	.650	.563	.375	.250	.542

Counts Unlimited, Inc.
PO Box 1178
Corona, CA 92878
(951)268-6268

City of Ontario
N/S: Archibald Avenue
E/W: Guasti Road
Weather: Clear

File Name : 03_ONT_Arch_Gua AM
Site Code : 00322818
Start Date : 9/20/2022
Page No : 1

Groups Printed- 3 Axle Vehicles

	Archibald Avenue Southbound				Guasti Road Westbound				Archibald Avenue Northbound				Guasti Road Eastbound				
Start Time	Left	Thru	Right	App. Total	Left	Thru	Right	App. Total	Left	Thru	Right	App. Total	Left	Thru	Right	App. Total	Int. Total
07:00 AM	1	0	1	2	0	0	0	0	0	3	0	3	6	0	0	6	11
07:15 AM	0	0	0	0	0	0	0	0	1	2	0	3	1	0	0	1	4
07:30 AM	1	0	3	4	0	0	0	0	0	0	0	0	3	0	0	3	7
07:45 AM	0	1	0	1	0	0	0	0	0	1	0	1	1	3	0	4	6
Total	2	1	4	7	0	0	0	0	1	6	0	7	11	3	0	14	28
08:00 AM	1	2	0	3	0	1	0	1	0	1	0	1	1	0	0	1	6
08:15 AM	3	0	1	4	0	0	0	0	0	0	0	0	1	0	0	1	5
08:30 AM	5	1	0	6	0	0	0	0	0	0	0	0	1	0	0	1	7
08:45 AM	4	0	0	4	0	0	0	0	0	1	0	1	2	0	0	2	7
Total	13	3	1	17	0	1	0	1	0	2	0	2	5	0	0	5	25
Grand Total	15	4	5	24	0	1	0	1	1	8	0	9	16	3	0	19	53
Apprch %	62.5	16.7	20.8		0	100	0		11.1	88.9	0		84.2	15.8	0		
Total %	28.3	7.5	9.4	45.3	0	1.9	0	1.9	1.9	15.1	0	17	30.2	5.7	0	35.8	

	Archibald Avenue Southbound				Guasti Road Westbound				Archibald Avenue Northbound				Guasti Road Eastbound				
Start Time	Left	Thru	Right	App. Total	Left	Thru	Right	App. Total	Left	Thru	Right	App. Total	Left	Thru	Right	App. Total	Int. Total
Peak Hour Analysis From 07:30 AM to 08:15 AM - Peak 1 of 1																	
Peak Hour for Entire Intersection Begins at 07:30 AM																	
07:30 AM	1	0	**3**	**4**	0	0	0	0	0	0	0	0	**3**	0	0	3	**7**
07:45 AM	0	1	0	1	0	0	0	0	0	**1**	0	**1**	1	**3**	0	**4**	6
08:00 AM	1	**2**	0	3	0	**1**	0	**1**	0	1	0	1	1	0	0	1	6
08:15 AM	**3**	0	1	4	0	0	0	0	0	0	0	0	1	0	0	1	5
Total Volume	5	3	4	12	0	1	0	1	0	2	0	2	6	3	0	9	24
% App. Total	41.7	25	33.3		0	100	0		0	100	0		66.7	33.3	0		
PHF	.417	.375	.333	.750	.000	.250	.000	.250	.000	.500	.000	.500	.500	.250	.000	.563	.857

Counts Unlimited, Inc.
PO Box 1178
Corona, CA 92878
(951)268-6268

City of Ontario
N/S: Archibald Avenue
E/W: Guasti Road
Weather: Clear

File Name : 03_ONT_Arch_Gua AM
Site Code : 00322818
Start Date : 9/20/2022
Page No : 2

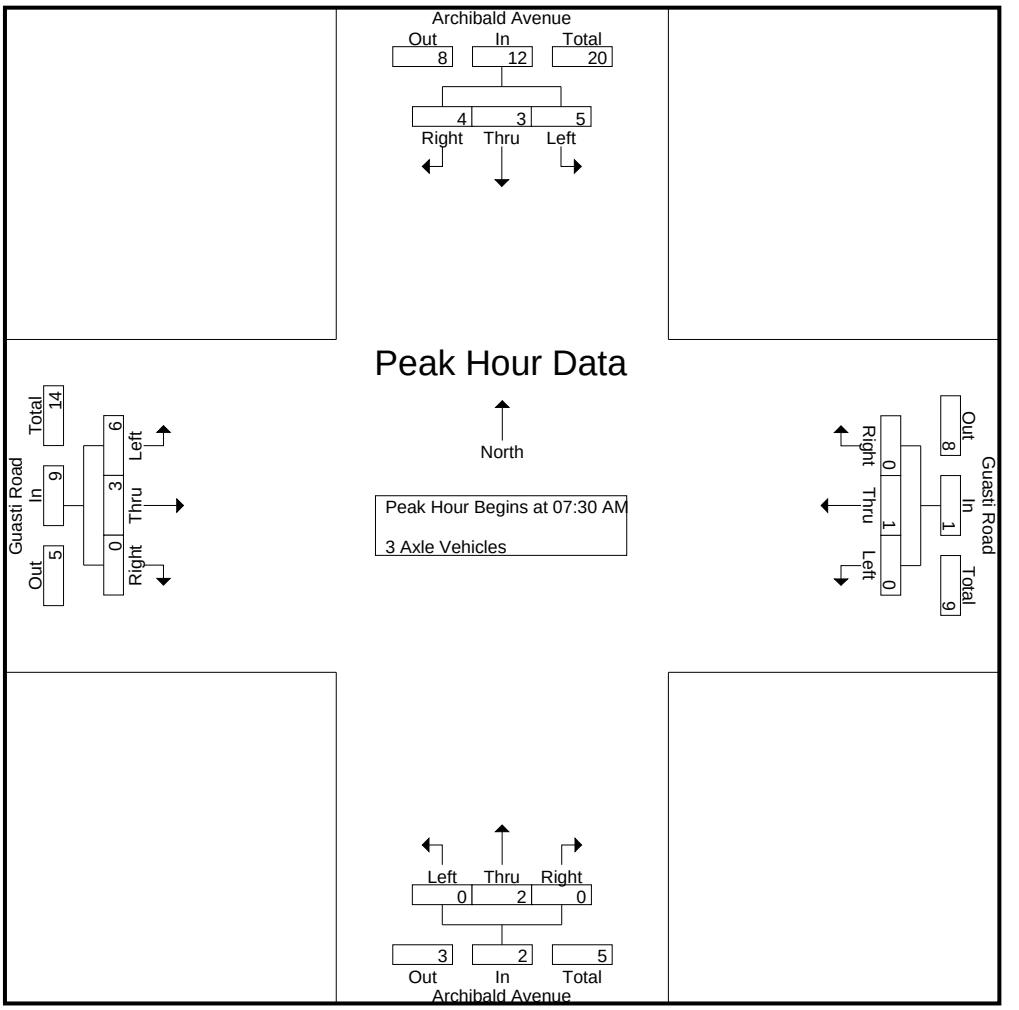

Peak Hour Analysis From 07:30 AM to 08:15 AM - Peak 1 of 1
Peak Hour for Each Approach Begins at:

	07:30 AM				07:30 AM				07:30 AM				07:30 AM			
+0 mins.	1	0	**3**	**4**	0	0	0	0	0	0	0	0	**3**	0	0	3
+15 mins.	0	1	0	1	0	0	0	0	0	**1**	0	**1**	1	**3**	0	**4**
+30 mins.	1	**2**	0	3	0	**1**	0	**1**	0	1	0	1	1	0	0	1
+45 mins.	**3**	0	1	4	0	0	0	0	0	0	0	0	1	0	0	1
Total Volume	5	3	4	12	0	1	0	1	0	2	0	2	6	3	0	9
% App. Total	41.7	25	33.3		0	100	0		0	100	0		66.7	33.3	0	
PHF	.417	.375	.333	.750	.000	.250	.000	.250	.000	.500	.000	.500	.500	.250	.000	.563

Counts Unlimited, Inc.
PO Box 1178
Corona, CA 92878
(951)268-6268

City of Ontario
N/S: Archibald Avenue
E/W: Guasti Road
Weather: Clear

File Name : 03_ONT_Arch_Gua AM
Site Code : 00322818
Start Date : 9/20/2022
Page No : 1

Groups Printed- 4+ Axle Trucks

	Archibald Avenue Southbound				Guasti Road Westbound				Archibald Avenue Northbound				Guasti Road Eastbound				
Start Time	Left	Thru	Right	App. Total	Left	Thru	Right	App. Total	Left	Thru	Right	App. Total	Left	Thru	Right	App. Total	Int. Total
07:00 AM	0	2	2	4	0	0	0	0	0	0	0	0	3	0	0	3	7
07:15 AM	0	1	5	6	0	0	0	0	0	2	0	2	1	0	0	1	9
07:30 AM	1	0	1	2	0	1	2	3	0	1	0	1	3	1	0	4	10
07:45 AM	1	1	1	3	0	0	0	0	1	3	0	4	2	0	1	3	10
Total	2	4	9	15	0	1	2	3	1	6	0	7	9	1	1	11	36
08:00 AM	1	1	2	4	0	0	0	0	0	2	0	2	4	0	0	4	10
08:15 AM	1	1	0	2	0	0	0	0	0	3	0	3	3	0	0	3	8
08:30 AM	1	3	1	5	1	0	0	1	0	4	0	4	4	0	0	4	14
08:45 AM	0	2	1	3	0	0	0	0	2	4	0	6	5	0	0	5	14
Total	3	7	4	14	1	0	0	1	2	13	0	15	16	0	0	16	46
Grand Total	5	11	13	29	1	1	2	4	3	19	0	22	25	1	1	27	82
Apprch %	17.2	37.9	44.8		25	25	50		13.6	86.4	0		92.6	3.7	3.7		
Total %	6.1	13.4	15.9	35.4	1.2	1.2	2.4	4.9	3.7	23.2	0	26.8	30.5	1.2	1.2	32.9	

	Archibald Avenue Southbound				Guasti Road Westbound				Archibald Avenue Northbound				Guasti Road Eastbound				
Start Time	Left	Thru	Right	App. Total	Left	Thru	Right	App. Total	Left	Thru	Right	App. Total	Left	Thru	Right	App. Total	Int. Total
Peak Hour Analysis From 07:30 AM to 08:15 AM - Peak 1 of 1																	
Peak Hour for Entire Intersection Begins at 07:30 AM																	
07:30 AM	**1**	0	1	2	0	**1**	**2**	**3**	0	1	0	1	3	**1**	0	**4**	**10**
07:45 AM	1	**1**	1	3	0	0	0	0	**1**	**3**	0	**4**	2	0	**1**	3	10
08:00 AM	1	1	**2**	**4**	0	0	0	0	0	2	0	2	**4**	0	0	4	10
08:15 AM	1	1	0	2	0	0	0	0	0	3	0	3	3	0	0	3	8
Total Volume	4	3	4	11	0	1	2	3	1	9	0	10	12	1	1	14	38
% App. Total	36.4	27.3	36.4		0	33.3	66.7		10	90	0		85.7	7.1	7.1		
PHF	1.00	.750	.500	.688	.000	.250	.250	.250	.250	.750	.000	.625	.750	.250	.250	.875	.950

Counts Unlimited, Inc.
PO Box 1178
Corona, CA 92878
(951)268-6268

City of Ontario
N/S: Archibald Avenue
E/W: Guasti Road
Weather: Clear

File Name : 03_ONT_Arch_Gua AM
Site Code : 00322818
Start Date : 9/20/2022
Page No : 2

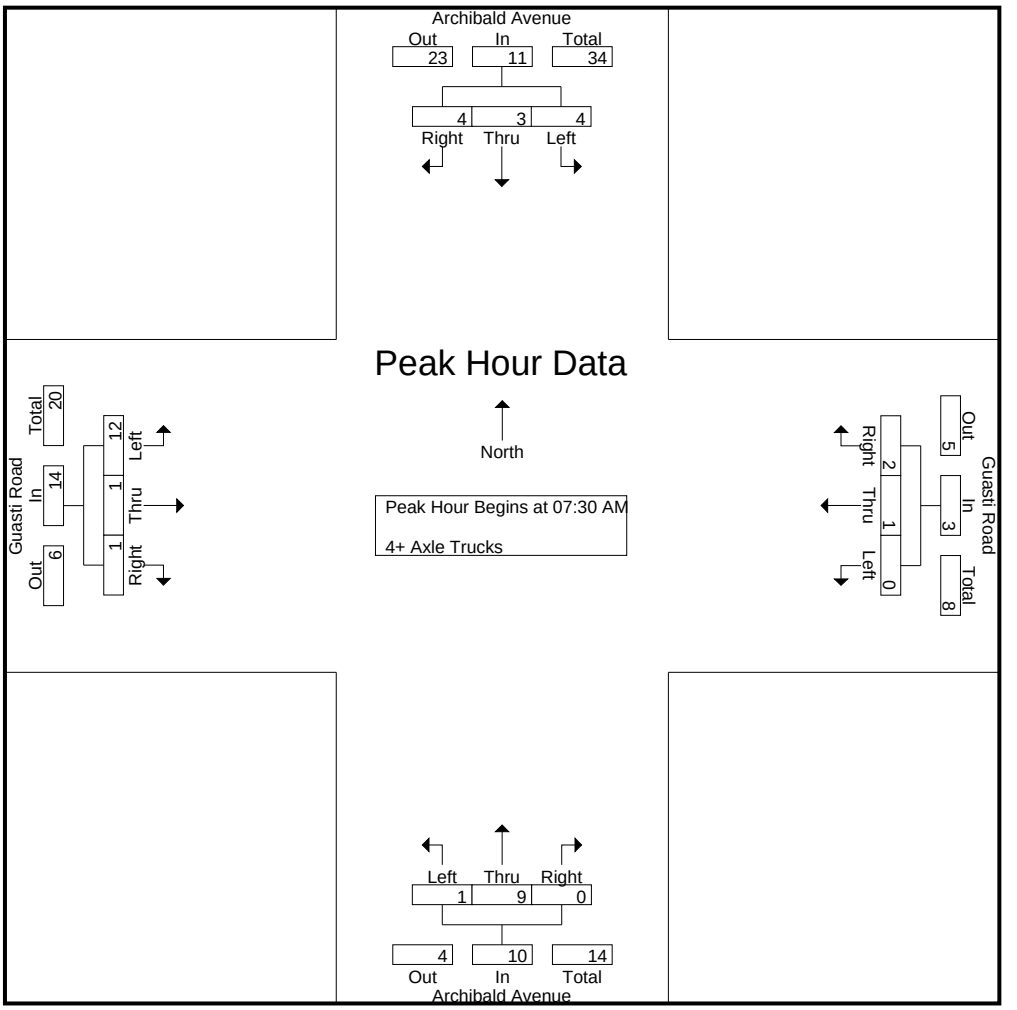

Peak Hour Analysis From 07:30 AM to 08:15 AM - Peak 1 of 1
Peak Hour for Each Approach Begins at:

	07:30 AM				07:30 AM				07:30 AM				07:30 AM			
+0 mins.	**1**	0	1	2	0	**1**	**2**	**3**	0	1	0	1	3	**1**	0	**4**
+15 mins.	1	**1**	1	3	0	0	0	0	**1**	**3**	0	**4**	2	0	**1**	3
+30 mins.	1	1	**2**	**4**	0	0	0	0	0	2	0	2	**4**	0	0	4
+45 mins.	1	1	0	2	0	0	0	0	0	3	0	3	3	0	0	3
Total Volume	4	3	4	11	0	1	2	3	1	9	0	10	12	1	1	14
% App. Total	36.4	27.3	36.4		0	33.3	66.7		10	90	0		85.7	7.1	7.1	
PHF	1.000	.750	.500	.688	.000	.250	.250	.250	.250	.750	.000	.625	.750	.250	.250	.875

Counts Unlimited, Inc.
PO Box 1178
Corona, CA 92878
(951)268-6268

City of Ontario
N/S: Archibald Avenue
E/W: Guasti Road
Weather: Clear

File Name : 03_ONT_Arch_Gua PM
Site Code : 00322818
Start Date : 9/20/2022
Page No : 1

Groups Printed- Passenger Vehicles - Large 2 Axle Vehicles - 3 Axle Vehicles - 4+ Axle Trucks

	Archibald Avenue Southbound				Guasti Road Westbound				Archibald Avenue Northbound				Guasti Road Eastbound				
Start Time	Left	Thru	Right	App. Total	Left	Thru	Right	App. Total	Left	Thru	Right	App. Total	Left	Thru	Right	App. Total	Int. Total
04:00 PM	24	172	24	220	13	22	54	89	7	282	19	308	55	24	3	82	699
04:15 PM	19	175	15	209	16	13	43	72	5	285	22	312	54	32	10	96	689
04:30 PM	20	172	24	216	12	11	46	69	3	323	16	342	42	30	9	81	708
04:45 PM	25	153	10	188	9	14	28	51	9	290	17	316	50	24	13	87	642
Total	88	672	73	833	50	60	171	281	24	1180	74	1278	201	110	35	346	2738
05:00 PM	18	188	29	235	15	8	89	112	6	278	14	298	56	43	21	120	765
05:15 PM	26	195	12	233	15	4	68	87	3	245	16	264	34	50	15	99	683
05:30 PM	13	151	20	184	26	9	80	115	6	254	7	267	50	29	10	89	655
05:45 PM	17	154	14	185	8	10	57	75	5	211	10	226	93	60	12	165	651
Total	74	688	75	837	64	31	294	389	20	988	47	1055	233	182	58	473	2754
Grand Total	162	1360	148	1670	114	91	465	670	44	2168	121	2333	434	292	93	819	5492
Apprch %	9.7	81.4	8.9		17	13.6	69.4		1.9	92.9	5.2		53	35.7	11.4		
Total %	2.9	24.8	2.7	30.4	2.1	1.7	8.5	12.2	0.8	39.5	2.2	42.5	7.9	5.3	1.7	14.9	
Passenger Vehicles	158	1271	142	1571	111	89	465	665	43	2110	119	2272	395	288	90	773	5281
% Passenger Vehicles	97.5	93.5	95.9	94.1	97.4	97.8	100	99.3	97.7	97.3	98.3	97.4	91	98.6	96.8	94.4	96.2
Large 2 Axle Vehicles	4	42	2	48	3	1	0	4	1	23	2	26	8	1	0	9	87
% Large 2 Axle Vehicles	2.5	3.1	1.4	2.9	2.6	1.1	0	0.6	2.3	1.1	1.7	1.1	1.8	0.3	0	1.1	1.6
3 Axle Vehicles	0	13	2	15	0	1	0	1	0	11	0	11	5	0	1	6	33
% 3 Axle Vehicles	0	1	1.4	0.9	0	1.1	0	0.1	0	0.5	0	0.5	1.2	0	1.1	0.7	0.6
4+ Axle Trucks	0	34	2	36	0	0	0	0	0	24	0	24	26	3	2	31	91
% 4+ Axle Trucks	0	2.5	1.4	2.2	0	0	0	0	0	1.1	0	1	6	1	2.2	3.8	1.7

	Archibald Avenue Southbound				Guasti Road Westbound				Archibald Avenue Northbound				Guasti Road Eastbound				
Start Time	Left	Thru	Right	App. Total	Left	Thru	Right	App. Total	Left	Thru	Right	App. Total	Left	Thru	Right	App. Total	Int. Total
Peak Hour Analysis From 04:00 PM to 05:45 PM - Peak 1 of 1																	
Peak Hour for Entire Intersection Begins at 04:15 PM																	
04:15 PM	19	175	15	209	**16**	13	43	72	5	285	**22**	312	54	32	10	96	689
04:30 PM	20	172	24	216	12	11	46	69	3	**323**	16	**342**	42	30	9	81	708
04:45 PM	**25**	153	10	188	9	**14**	28	51	**9**	290	17	316	50	24	13	87	642
05:00 PM	18	**188**	**29**	**235**	15	8	**89**	**112**	6	278	14	298	**56**	**43**	**21**	**120**	**765**
Total Volume	82	688	78	848	52	46	206	304	23	1176	69	1268	202	129	53	384	2804
% App. Total	9.7	81.1	9.2		17.1	15.1	67.8		1.8	92.7	5.4		52.6	33.6	13.8		
PHF	.820	.915	.672	.902	.813	.821	.579	.679	.639	.910	.784	.927	.902	.750	.631	.800	.916

Counts Unlimited, Inc.
PO Box 1178
Corona, CA 92878
(951)268-6268

City of Ontario
N/S: Archibald Avenue
E/W: Guasti Road
Weather: Clear

File Name : 03_ONT_Arch_Gua PM
Site Code : 00322818
Start Date : 9/20/2022
Page No : 2

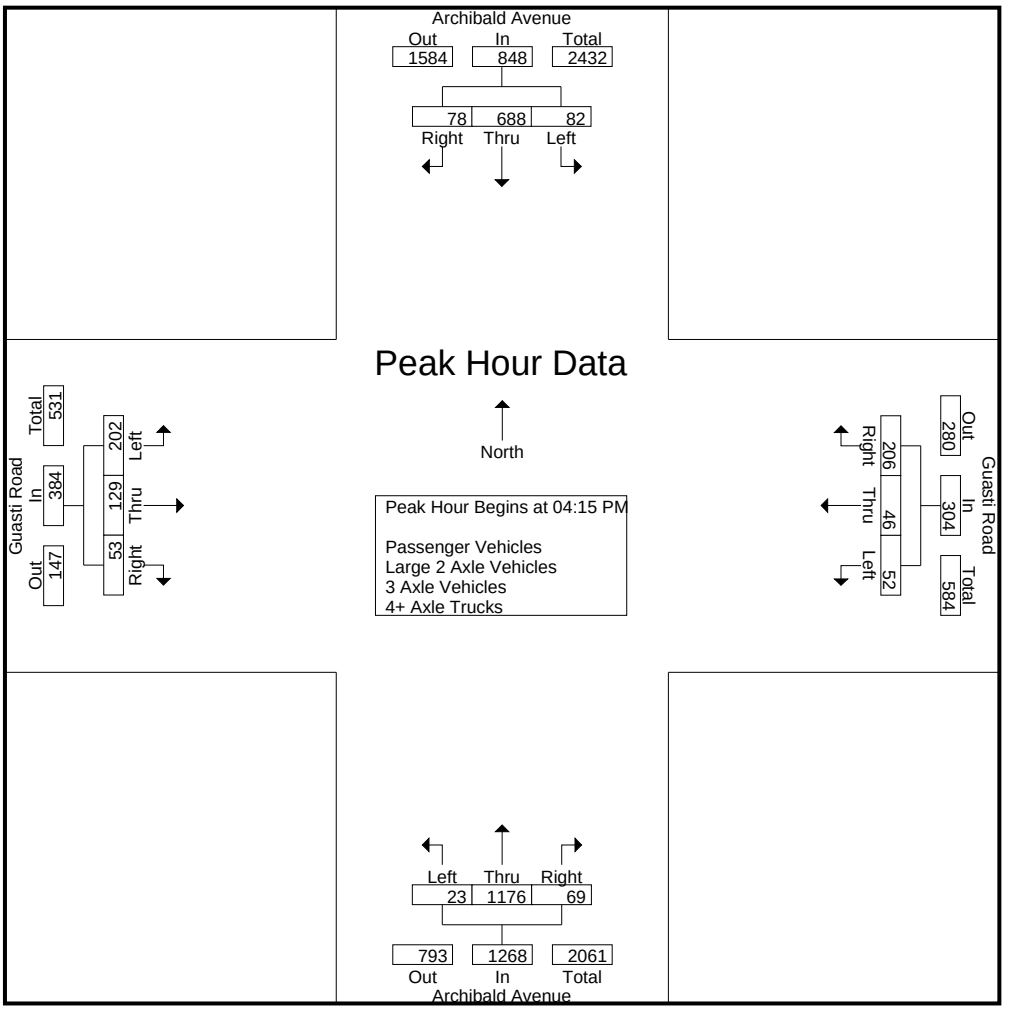

Peak Hour Analysis From 04:00 PM to 05:45 PM - Peak 1 of 1
Peak Hour for Each Approach Begins at:

	04:30 PM				05:00 PM				04:00 PM				05:00 PM			
+0 mins.	20	172	24	216	15	8	**89**	112	7	282	19	308	56	43	**21**	120
+15 mins.	25	153	10	188	15	4	68	87	5	285	**22**	312	34	50	15	99
+30 mins.	18	188	**29**	**235**	**26**	9	80	**115**	3	**323**	16	**342**	50	29	10	89
+45 mins.	**26**	**195**	12	233	8	**10**	57	75	**9**	290	17	316	**93**	**60**	12	**165**
Total Volume	89	708	75	872	64	31	294	389	24	1180	74	1278	233	182	58	473
% App. Total	10.2	81.2	8.6		16.5	8	75.6		1.9	92.3	5.8		49.3	38.5	12.3	
PHF	.856	.908	.647	.928	.615	.775	.826	.846	.667	.913	.841	.934	.626	.758	.690	.717

Counts Unlimited, Inc.
PO Box 1178
Corona, CA 92878
(951)268-6268

City of Ontario
N/S: Archibald Avenue
E/W: Guasti Road
Weather: Clear

File Name : 03_ONT_Arch_Gua PM
Site Code : 00322818
Start Date : 9/20/2022
Page No : 1

Groups Printed- Passenger Vehicles

	Archibald Avenue Southbound				Guasti Road Westbound				Archibald Avenue Northbound				Guasti Road Eastbound				
Start Time	Left	Thru	Right	App. Total	Left	Thru	Right	App. Total	Left	Thru	Right	App. Total	Left	Thru	Right	App. Total	Int. Total
04:00 PM	23	164	22	209	13	22	54	89	6	271	19	296	51	24	3	78	672
04:15 PM	18	161	15	194	16	12	43	71	5	281	22	308	52	31	10	93	666
04:30 PM	19	160	24	203	11	10	46	67	3	315	16	334	37	29	8	74	678
04:45 PM	25	143	10	178	9	14	28	51	9	282	16	307	45	23	12	80	616
Total	85	628	71	784	49	58	171	278	23	1149	73	1245	185	107	33	325	2632
05:00 PM	18	178	25	221	14	8	89	111	6	271	13	290	53	42	20	115	737
05:15 PM	25	184	12	221	14	4	68	86	3	239	16	258	29	50	15	94	659
05:30 PM	13	141	20	174	26	9	80	115	6	247	7	260	45	29	10	84	633
05:45 PM	17	140	14	171	8	10	57	75	5	204	10	219	83	60	12	155	620
Total	73	643	71	787	62	31	294	387	20	961	46	1027	210	181	57	448	2649
Grand Total	158	1271	142	1571	111	89	465	665	43	2110	119	2272	395	288	90	773	5281
Apprch %	10.1	80.9	9		16.7	13.4	69.9		1.9	92.9	5.2		51.1	37.3	11.6		
Total %	3	24.1	2.7	29.7	2.1	1.7	8.8	12.6	0.8	40	2.3	43	7.5	5.5	1.7	14.6	

	Archibald Avenue Southbound				Guasti Road Westbound				Archibald Avenue Northbound				Guasti Road Eastbound				
Start Time	Left	Thru	Right	App. Total	Left	Thru	Right	App. Total	Left	Thru	Right	App. Total	Left	Thru	Right	App. Total	Int. Total
Peak Hour Analysis From 04:15 PM to 05:00 PM - Peak 1 of 1																	
Peak Hour for Entire Intersection Begins at 04:15 PM																	
04:15 PM	18	161	15	194	**16**	12	43	71	5	281	**22**	308	52	31	10	93	666
04:30 PM	19	160	24	203	11	10	46	67	3	**315**	16	**334**	37	29	8	74	678
04:45 PM	**25**	143	10	178	9	**14**	28	51	**9**	282	16	307	45	23	12	80	616
05:00 PM	18	**178**	**25**	**221**	14	8	**89**	**111**	6	271	13	290	**53**	**42**	**20**	**115**	**737**
Total Volume	80	642	74	796	50	44	206	300	23	1149	67	1239	187	125	50	362	2697
% App. Total	10.1	80.7	9.3		16.7	14.7	68.7		1.9	92.7	5.4		51.7	34.5	13.8		
PHF	.800	.902	.740	.900	.781	.786	.579	.676	.639	.912	.761	.927	.882	.744	.625	.787	.915

Counts Unlimited, Inc.
PO Box 1178
Corona, CA 92878
(951)268-6268

City of Ontario
N/S: Archibald Avenue
E/W: Guasti Road
Weather: Clear

File Name : 03_ONT_Arch_Gua PM
Site Code : 00322818
Start Date : 9/20/2022
Page No : 2

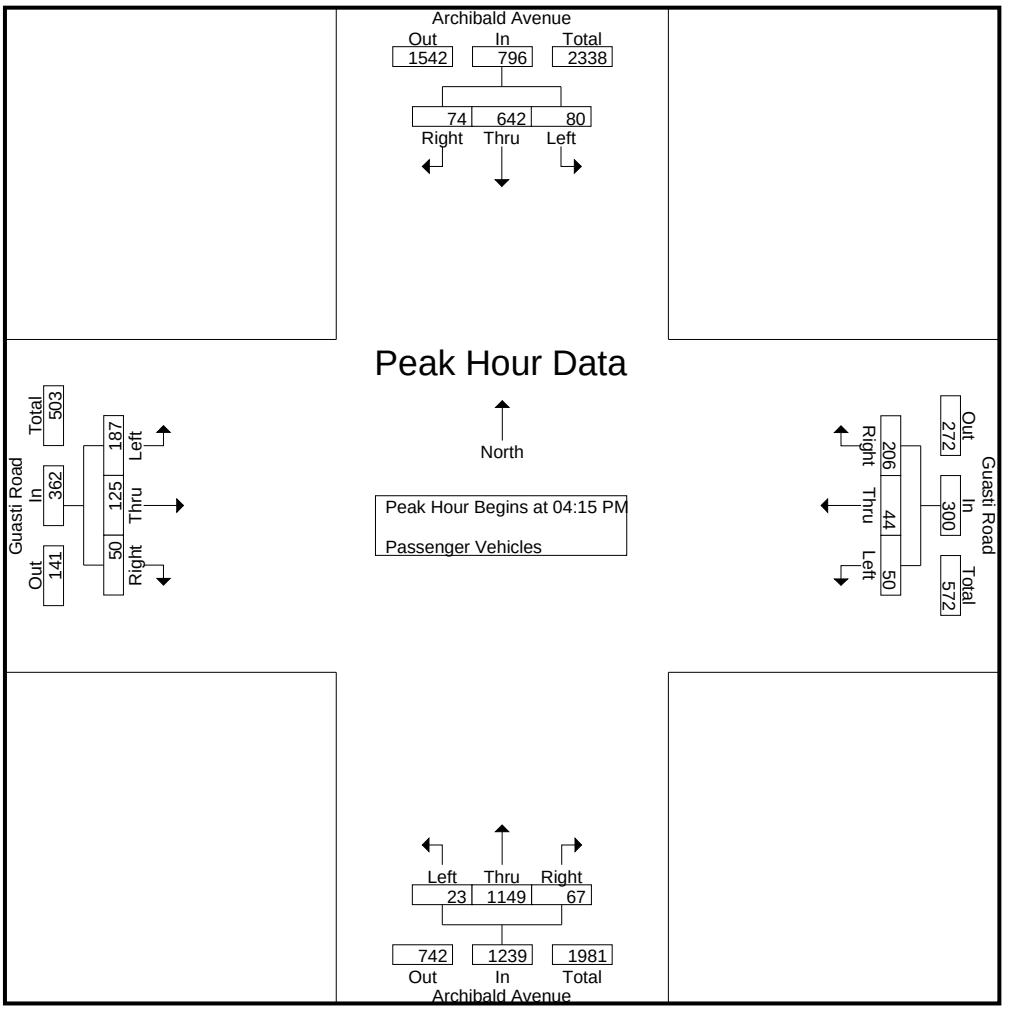

Peak Hour Analysis From 04:15 PM to 05:00 PM - Peak 1 of 1
Peak Hour for Each Approach Begins at:

	04:15 PM				04:15 PM				04:15 PM				04:15 PM			
+0 mins.	18	161	15	194	**16**	12	43	71	5	281	**22**	308	52	31	10	93
+15 mins.	19	160	24	203	11	10	46	67	3	**315**	16	**334**	37	29	8	74
+30 mins.	**25**	143	10	178	9	**14**	28	51	**9**	282	16	307	45	23	12	80
+45 mins.	18	**178**	**25**	**221**	14	8	**89**	**111**	6	271	13	290	**53**	**42**	**20**	**115**
Total Volume	80	642	74	796	50	44	206	300	23	1149	67	1239	187	125	50	362
% App. Total	10.1	80.7	9.3		16.7	14.7	68.7		1.9	92.7	5.4		51.7	34.5	13.8	
PHF	.800	.902	.740	.900	.781	.786	.579	.676	.639	.912	.761	.927	.882	.744	.625	.787

Counts Unlimited, Inc.
PO Box 1178
Corona, CA 92878
(951)268-6268

City of Ontario
N/S: Archibald Avenue
E/W: Guasti Road
Weather: Clear

File Name : 03_ONT_Arch_Gua PM
Site Code : 00322818
Start Date : 9/20/2022
Page No : 1

Groups Printed- Large 2 Axle Vehicles

	Archibald Avenue Southbound				Guasti Road Westbound				Archibald Avenue Northbound				Guasti Road Eastbound				
Start Time	Left	Thru	Right	App. Total	Left	Thru	Right	App. Total	Left	Thru	Right	App. Total	Left	Thru	Right	App. Total	Int. Total
04:00 PM	1	6	1	8	0	0	0	0	1	6	0	7	0	0	0	0	15
04:15 PM	1	4	0	5	0	1	0	1	0	1	0	1	1	1	0	2	9
04:30 PM	1	6	0	7	1	0	0	1	0	3	0	3	0	0	0	0	11
04:45 PM	0	4	0	4	0	0	0	0	0	2	1	3	0	0	0	0	7
Total	3	20	1	24	1	1	0	2	1	12	1	14	1	1	0	2	42
05:00 PM	0	7	1	8	1	0	0	1	0	3	1	4	0	0	0	0	13
05:15 PM	1	5	0	6	1	0	0	1	0	3	0	3	1	0	0	1	11
05:30 PM	0	5	0	5	0	0	0	0	0	2	0	2	0	0	0	0	7
05:45 PM	0	5	0	5	0	0	0	0	0	3	0	3	6	0	0	6	14
Total	1	22	1	24	2	0	0	2	0	11	1	12	7	0	0	7	45
Grand Total	4	42	2	48	3	1	0	4	1	23	2	26	8	1	0	9	87
Apprch %	8.3	87.5	4.2		75	25	0		3.8	88.5	7.7		88.9	11.1	0		
Total %	4.6	48.3	2.3	55.2	3.4	1.1	0	4.6	1.1	26.4	2.3	29.9	9.2	1.1	0	10.3	

	Archibald Avenue Southbound				Guasti Road Westbound				Archibald Avenue Northbound				Guasti Road Eastbound				
Start Time	Left	Thru	Right	App. Total	Left	Thru	Right	App. Total	Left	Thru	Right	App. Total	Left	Thru	Right	App. Total	Int. Total
Peak Hour Analysis From 04:15 PM to 05:00 PM - Peak 1 of 1																	
Peak Hour for Entire Intersection Begins at 04:15 PM																	
04:15 PM	**1**	4	0	5	0	**1**	0	**1**	0	1	0	1	**1**	**1**	0	**2**	9
04:30 PM	1	6	0	7	**1**	0	0	1	0	**3**	0	3	0	0	0	0	11
04:45 PM	0	4	0	4	0	0	0	0	0	2	**1**	3	0	0	0	0	7
05:00 PM	0	**7**	**1**	**8**	1	0	0	1	0	3	1	**4**	0	0	0	0	**13**
Total Volume	2	21	1	24	2	1	0	3	0	9	2	11	1	1	0	2	40
% App. Total	8.3	87.5	4.2		66.7	33.3	0		0	81.8	18.2		50	50	0		
PHF	.500	.750	.250	.750	.500	.250	.000	.750	.000	.750	.500	.688	.250	.250	.000	.250	.769

Counts Unlimited, Inc.
PO Box 1178
Corona, CA 92878
(951)268-6268

City of Ontario
N/S: Archibald Avenue
E/W: Guasti Road
Weather: Clear

File Name : 03_ONT_Arch_Gua PM
Site Code : 00322818
Start Date : 9/20/2022
Page No : 2

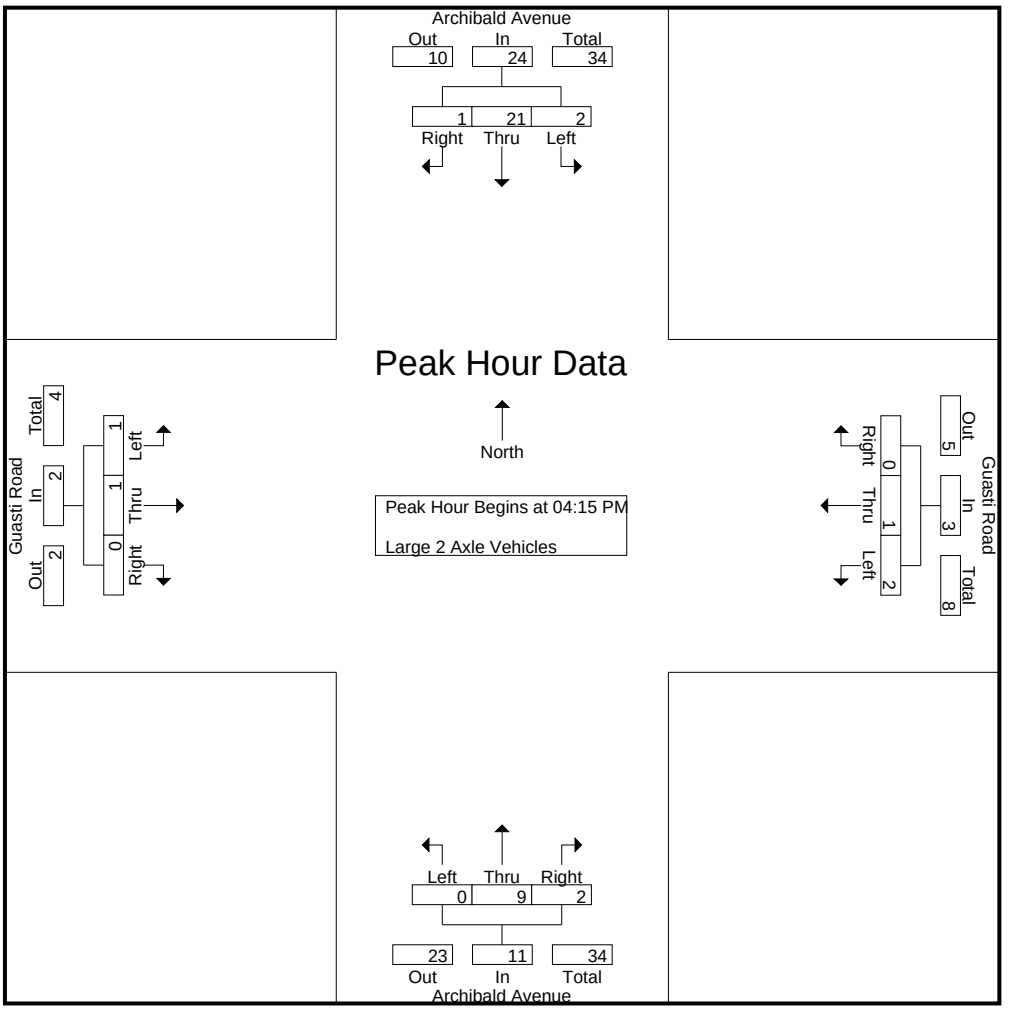

Peak Hour Analysis From 04:15 PM to 05:00 PM - Peak 1 of 1
Peak Hour for Each Approach Begins at:

	04:15 PM				04:15 PM				04:15 PM				04:15 PM			
+0 mins.	**1**	4	0	5	0	**1**	0	**1**	0	1	0	1	**1**	**1**	0	**2**
+15 mins.	1	6	0	7	**1**	0	0	1	0	**3**	0	3	0	0	0	0
+30 mins.	0	4	0	4	0	0	0	0	0	2	**1**	3	0	0	0	0
+45 mins.	0	**7**	**1**	**8**	1	0	0	1	0	3	1	**4**	0	0	0	0
Total Volume	2	21	1	24	2	1	0	3	0	9	2	11	1	1	0	2
% App. Total	8.3	87.5	4.2		66.7	33.3	0		0	81.8	18.2		50	50	0	
PHF	.500	.750	.250	.750	.500	.250	.000	.750	.000	.750	.500	.688	.250	.250	.000	.250

Counts Unlimited, Inc.
PO Box 1178
Corona, CA 92878
(951)268-6268

City of Ontario
N/S: Archibald Avenue
E/W: Guasti Road
Weather: Clear

File Name : 03_ONT_Arch_Gua PM
Site Code : 00322818
Start Date : 9/20/2022
Page No : 1

Groups Printed- 3 Axle Vehicles

	Archibald Avenue Southbound				Guasti Road Westbound				Archibald Avenue Northbound				Guasti Road Eastbound				
Start Time	Left	Thru	Right	App. Total	Left	Thru	Right	App. Total	Left	Thru	Right	App. Total	Left	Thru	Right	App. Total	Int. Total
04:00 PM	0	1	0	1	0	0	0	0	0	3	0	3	2	0	0	2	6
04:15 PM	0	2	0	2	0	0	0	0	0	1	0	1	0	0	0	0	3
04:30 PM	0	4	0	4	0	1	0	1	0	0	0	0	0	0	0	0	5
04:45 PM	0	1	0	1	0	0	0	0	0	2	0	2	0	0	0	0	3
Total	0	8	0	8	0	1	0	1	0	6	0	6	2	0	0	2	17
05:00 PM	0	0	2	2	0	0	0	0	0	1	0	1	0	0	1	1	4
05:15 PM	0	2	0	2	0	0	0	0	0	1	0	1	2	0	0	2	5
05:30 PM	0	1	0	1	0	0	0	0	0	3	0	3	1	0	0	1	5
05:45 PM	0	2	0	2	0	0	0	0	0	0	0	0	0	0	0	0	2
Total	0	5	2	7	0	0	0	0	0	5	0	5	3	0	1	4	16
Grand Total	0	13	2	15	0	1	0	1	0	11	0	11	5	0	1	6	33
Apprch %	0	86.7	13.3		0	100	0		0	100	0		83.3	0	16.7		
Total %	0	39.4	6.1	45.5	0	3	0	3	0	33.3	0	33.3	15.2	0	3	18.2	

	Archibald Avenue Southbound				Guasti Road Westbound				Archibald Avenue Northbound				Guasti Road Eastbound				
Start Time	Left	Thru	Right	App. Total	Left	Thru	Right	App. Total	Left	Thru	Right	App. Total	Left	Thru	Right	App. Total	Int. Total
Peak Hour Analysis From 04:15 PM to 05:00 PM - Peak 1 of 1																	
Peak Hour for Entire Intersection Begins at 04:15 PM																	
04:15 PM	0	2	0	2	0	0	0	0	0	1	0	1	0	0	0	0	3
04:30 PM	0	**4**	0	**4**	0	**1**	0	**1**	0	0	0	0	0	0	0	0	**5**
04:45 PM	0	1	0	1	0	0	0	0	0	**2**	0	**2**	0	0	0	0	3
05:00 PM	0	0	**2**	2	0	0	0	0	0	1	0	1	0	0	**1**	**1**	4
Total Volume	0	7	2	9	0	1	0	1	0	4	0	4	0	0	1	1	15
% App. Total	0	77.8	22.2		0	100	0		0	100	0		0	0	100		
PHF	.000	.438	.250	.563	.000	.250	.000	.250	.000	.500	.000	.500	.000	.000	.250	.250	.750

Counts Unlimited, Inc.
PO Box 1178
Corona, CA 92878
(951)268-6268

City of Ontario
N/S: Archibald Avenue
E/W: Guasti Road
Weather: Clear

File Name : 03_ONT_Arch_Gua PM
Site Code : 00322818
Start Date : 9/20/2022
Page No : 2

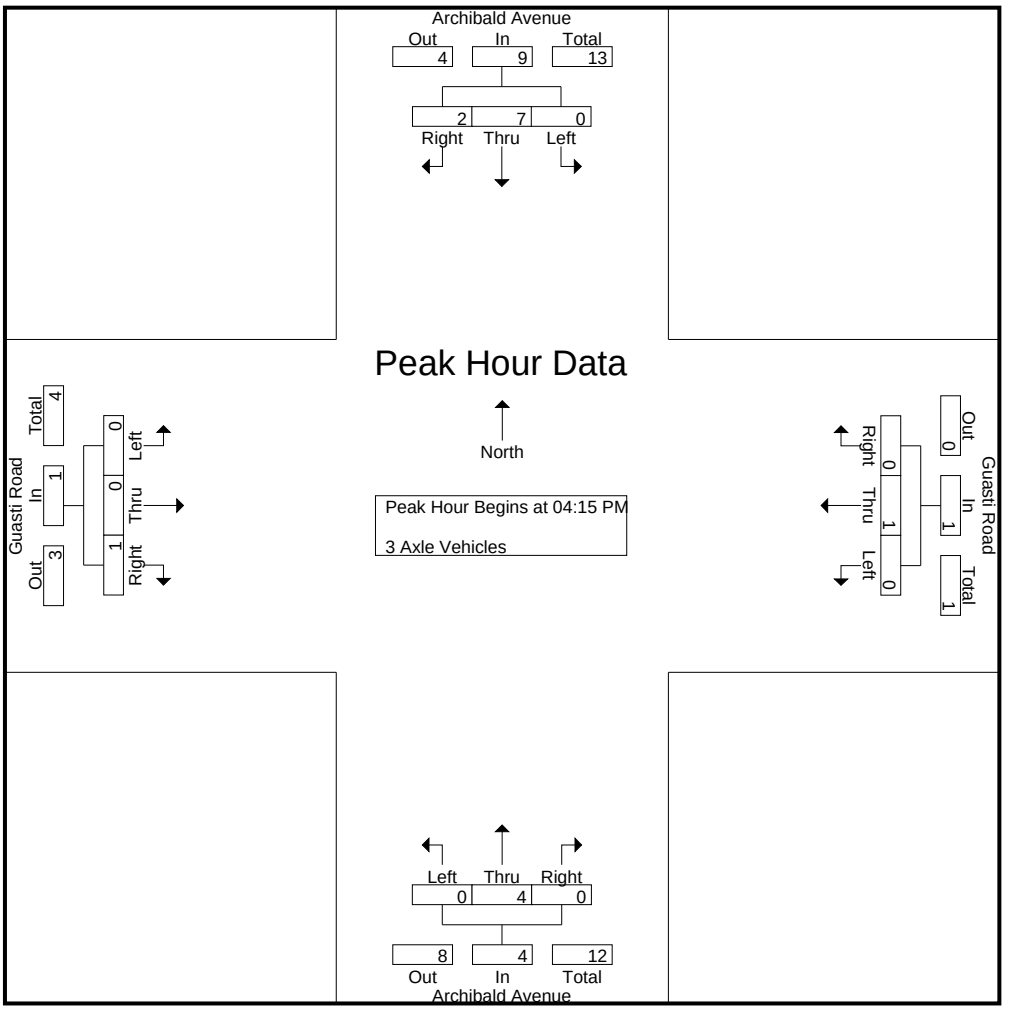

Peak Hour Analysis From 04:15 PM to 05:00 PM - Peak 1 of 1
Peak Hour for Each Approach Begins at:

	04:15 PM				04:15 PM				04:15 PM				04:15 PM			
+0 mins.	0	2	0	2	0	0	0	0	0	1	0	1	0	0	0	0
+15 mins.	0	**4**	0	**4**	0	**1**	0	**1**	0	0	0	0	0	0	0	0
+30 mins.	0	1	0	1	0	0	0	0	0	**2**	0	**2**	0	0	0	0
+45 mins.	0	0	**2**	2	0	0	0	0	0	1	0	1	0	0	**1**	**1**
Total Volume	0	7	2	9	0	1	0	1	0	4	0	4	0	0	1	1
% App. Total	0	77.8	22.2		0	100	0		0	100	0		0	0	100	
PHF	.000	.438	.250	.563	.000	.250	.000	.250	.000	.500	.000	.500	.000	.000	.250	.250

Counts Unlimited, Inc.
PO Box 1178
Corona, CA 92878
(951)268-6268

City of Ontario
N/S: Archibald Avenue
E/W: Guasti Road
Weather: Clear

File Name : 03_ONT_Arch_Gua PM
Site Code : 00322818
Start Date : 9/20/2022
Page No : 1

Groups Printed- 4+ Axle Trucks

	Archibald Avenue Southbound				Guasti Road Westbound				Archibald Avenue Northbound				Guasti Road Eastbound				
Start Time	Left	Thru	Right	App. Total	Left	Thru	Right	App. Total	Left	Thru	Right	App. Total	Left	Thru	Right	App. Total	Int. Total
04:00 PM	0	1	1	2	0	0	0	0	0	2	0	2	2	0	0	2	6
04:15 PM	0	8	0	8	0	0	0	0	0	2	0	2	1	0	0	1	11
04:30 PM	0	2	0	2	0	0	0	0	0	5	0	5	5	1	1	7	14
04:45 PM	0	5	0	5	0	0	0	0	0	4	0	4	5	1	1	7	16
Total	0	16	1	17	0	0	0	0	0	13	0	13	13	2	2	17	47
05:00 PM	0	3	1	4	0	0	0	0	0	3	0	3	3	1	0	4	11
05:15 PM	0	4	0	4	0	0	0	0	0	2	0	2	2	0	0	2	8
05:30 PM	0	4	0	4	0	0	0	0	0	2	0	2	4	0	0	4	10
05:45 PM	0	7	0	7	0	0	0	0	0	4	0	4	4	0	0	4	15
Total	0	18	1	19	0	0	0	0	0	11	0	11	13	1	0	14	44
Grand Total	0	34	2	36	0	0	0	0	0	24	0	24	26	3	2	31	91
Apprch %	0	94.4	5.6		0	0	0		0	100	0		83.9	9.7	6.5		
Total %	0	37.4	2.2	39.6	0	0	0	0	0	26.4	0	26.4	28.6	3.3	2.2	34.1	

	Archibald Avenue Southbound				Guasti Road Westbound				Archibald Avenue Northbound				Guasti Road Eastbound				
Start Time	Left	Thru	Right	App. Total	Left	Thru	Right	App. Total	Left	Thru	Right	App. Total	Left	Thru	Right	App. Total	Int. Total
Peak Hour Analysis From 04:15 PM to 05:00 PM - Peak 1 of 1																	
Peak Hour for Entire Intersection Begins at 04:15 PM																	
04:15 PM	0	**8**	0	**8**	0	0	0	0	0	2	0	2	1	0	0	1	11
04:30 PM	0	2	0	2	0	0	0	0	0	**5**	0	**5**	**5**	**1**	**1**	**7**	14
04:45 PM	0	5	0	5	0	0	0	0	0	4	0	4	5	1	1	7	**16**
05:00 PM	0	3	**1**	4	0	0	0	0	0	3	0	3	3	1	0	4	11
Total Volume	0	18	1	19	0	0	0	0	0	14	0	14	14	3	2	19	52
% App. Total	0	94.7	5.3		0	0	0		0	100	0		73.7	15.8	10.5		
PHF	.000	.563	.250	.594	.000	.000	.000	.000	.000	.700	.000	.700	.700	.750	.500	.679	.813

Counts Unlimited, Inc.
PO Box 1178
Corona, CA 92878
(951)268-6268

City of Ontario
N/S: Archibald Avenue
E/W: Guasti Road
Weather: Clear

File Name : 03_ONT_Arch_Gua PM
Site Code : 00322818
Start Date : 9/20/2022
Page No : 2

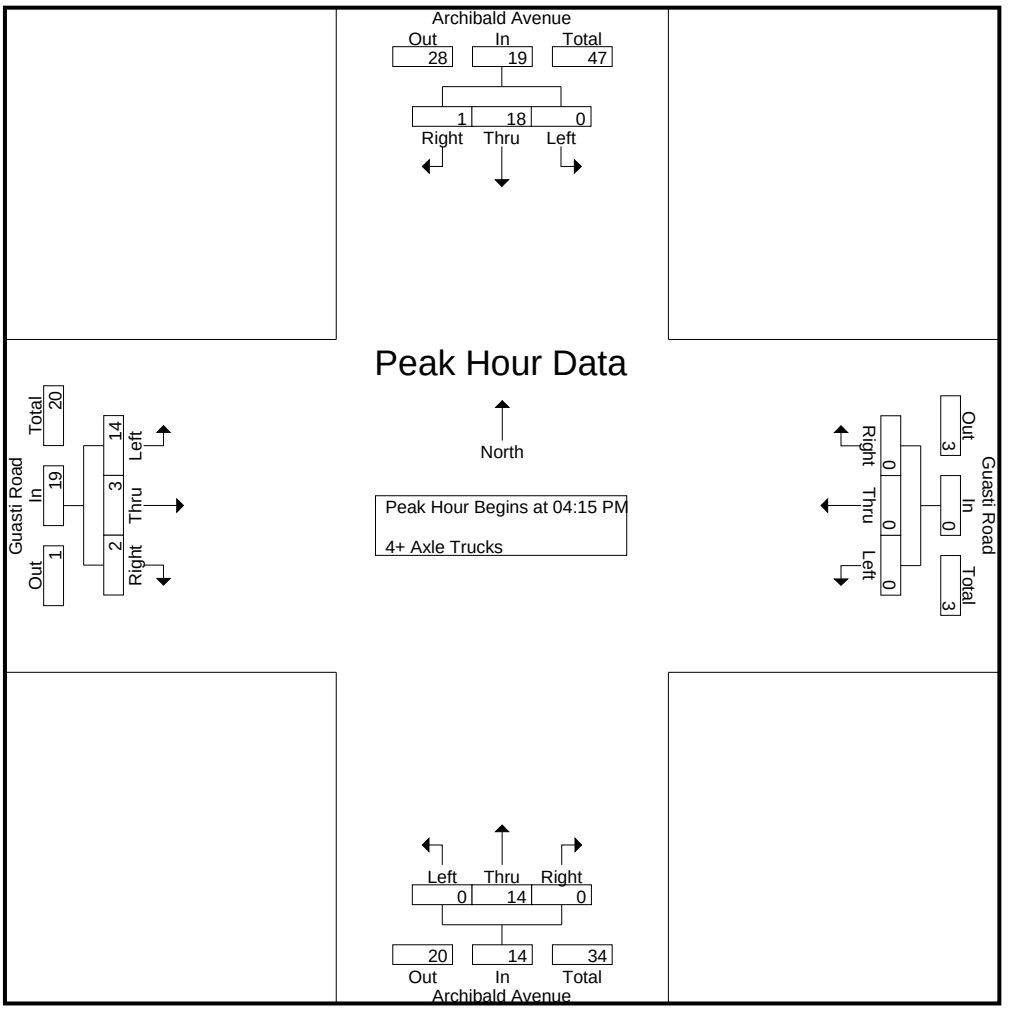

Peak Hour Analysis From 04:15 PM to 05:00 PM - Peak 1 of 1
Peak Hour for Each Approach Begins at:

	04:15 PM				04:15 PM				04:15 PM				04:15 PM			
+0 mins.	0	**8**	0	**8**	0	0	0	0	0	2	0	2	1	0	0	1
+15 mins.	0	2	0	2	0	0	0	0	0	**5**	0	**5**	**5**	**1**	**1**	**7**
+30 mins.	0	5	0	5	0	0	0	0	0	4	0	4	5	1	1	7
+45 mins.	0	3	**1**	4	0	0	0	0	0	3	0	3	3	1	0	4
Total Volume	0	18	1	19	0	0	0	0	0	14	0	14	14	3	2	19
% App. Total	0	94.7	5.3		0	0	0		0	100	0		73.7	15.8	10.5	
PHF	.000	.563	.250	.594	.000	.000	.000	.000	.000	.700	.000	.700	.700	.750	.500	.679

Location: Ontario
N/S: Archibald Avenue
E/W: Guasti Road

Date: 9/20/2022
Day: Tuesday

PEDESTRIANS

	North Leg Archibald Avenue	East Leg Guasti Road	South Leg Archibald Avenue	West Leg Guasti Road	
	Pedestrians	Pedestrians	Pedestrians	Pedestrians	
7:00 AM	0	0	0	1	1
7:15 AM	0	0	0	0	0
7:30 AM	0	0	0	0	0
7:45 AM	0	0	0	1	1
8:00 AM	0	0	0	0	0
8:15 AM	0	0	0	1	1
8:30 AM	0	0	0	0	0
8:45 AM	0	0	0	0	0
TOTAL VOLUMES:	0	0	0	3	3

	North Leg Archibald Avenue	East Leg Guasti Road	South Leg Archibald Avenue	West Leg Guasti Road	
	Pedestrians	Pedestrians	Pedestrians	Pedestrians	
4:00 PM	0	0	0	0	0
4:15 PM	0	1	0	0	1
4:30 PM	0	0	0	0	0
4:45 PM	0	2	0	0	2
5:00 PM	0	0	0	2	2
5:15 PM	0	0	0	0	0
5:30 PM	0	0	0	0	0
5:45 PM	1	0	0	0	1
TOTAL VOLUMES:	1	3	0	2	6

Counts Unlimited, Inc.
PO Box 1178
Corona, CA 92878
951-268-6268

Location: Ontario
N/S: Archibald Avenue
E/W: Guasti Road

Date: 9/20/2022
Day: Tuesday

BICYCLES

	Southbound Archibald Avenue			Westbound Guasti Road			Northbound Archibald Avenue			Eastbound Guasti Road			
	Left	Thru	Right	Left	Thru	Right	Left	Thru	Right	Left	Thru	Right	
7:00 AM	0	0	0	0	0	0	0	0	0	0	0	0	0
7:15 AM	0	0	0	0	0	0	0	0	0	0	0	0	0
7:30 AM	0	0	0	0	0	0	0	0	0	0	0	0	0
7:45 AM	0	0	0	0	0	0	0	0	0	0	0	0	0
8:00 AM	0	0	0	0	0	0	0	0	0	0	0	0	0
8:15 AM	0	0	0	0	1	0	0	0	0	0	0	0	1
8:30 AM	0	0	0	0	0	0	0	0	0	0	0	0	0
8:45 AM	0	0	0	0	0	0	0	0	0	0	0	0	0
TOTAL VOLUMES:	0	0	0	0	1	0	0	0	0	0	0	0	1

	Southbound Archibald Avenue			Westbound Guasti Road			Northbound Archibald Avenue			Eastbound Guasti Road			
	Left	Thru	Right	Left	Thru	Right	Left	Thru	Right	Left	Thru	Right	
4:00 PM	0	1	0	0	0	0	0	0	0	0	1	0	2
4:15 PM	0	0	0	0	1	0	0	0	0	0	0	0	1
4:30 PM	0	0	0	0	0	0	0	0	0	0	0	0	0
4:45 PM	0	0	1	0	0	0	0	0	0	0	0	0	1
5:00 PM	0	0	0	0	0	0	0	0	0	0	0	0	0
5:15 PM	0	0	0	0	0	0	0	0	0	0	0	0	0
5:30 PM	0	0	0	0	0	0	0	0	0	0	0	0	0
5:45 PM	1	0	0	0	0	0	0	0	0	0	0	0	1
TOTAL VOLUMES:	1	1	1	0	1	0	0	0	0	0	1	0	5

Counts Unlimited, Inc.
PO Box 1178
Corona, CA 92878
951-268-6268

Counts Unlimited, Inc.
PO Box 1178
Corona, CA 92878
(951)268-6268

City of Ontario
N/S: Archibald Avenue
E/W: Airport Drive
Weather: Clear

File Name : 04_ONT_Arch_AP AM
Site Code : 00322818
Start Date : 9/20/2022
Page No : 1

Groups Printed- Passenger Vehicles - Large 2 Axle Vehicles - 3 Axle Vehicles - 4+ Axle Trucks

	Archibald Avenue Southbound				Airport Drive Westbound				Archibald Avenue Northbound				Airport Drive Eastbound				
Start Time	Left	Thru	Right	App. Total	Left	Thru	Right	App. Total	Left	Thru	Right	App. Total	Left	Thru	Right	App. Total	Int. Total
07:00 AM	48	31	80	159	14	57	49	120	1	2	4	7	64	64	0	128	414
07:15 AM	53	14	92	159	18	72	40	130	1	4	2	7	63	59	0	122	418
07:30 AM	62	19	104	185	14	63	72	149	6	3	4	13	104	93	2	199	546
07:45 AM	77	24	108	209	13	89	90	192	3	8	4	15	109	95	7	211	627
Total	240	88	384	712	59	281	251	591	11	17	14	42	340	311	9	660	2005
08:00 AM	46	22	103	171	18	75	80	173	4	10	2	16	96	73	10	179	539
08:15 AM	63	43	84	190	7	78	84	169	5	9	2	16	106	61	1	168	543
08:30 AM	39	27	68	134	23	67	84	174	7	7	2	16	90	54	4	148	472
08:45 AM	45	58	58	161	15	58	75	148	5	10	3	18	91	43	5	139	466
Total	193	150	313	656	63	278	323	664	21	36	9	66	383	231	20	634	2020
Grand Total	433	238	697	1368	122	559	574	1255	32	53	23	108	723	542	29	1294	4025
Apprch %	31.7	17.4	51		9.7	44.5	45.7		29.6	49.1	21.3		55.9	41.9	2.2		
Total %	10.8	5.9	17.3	34	3	13.9	14.3	31.2	0.8	1.3	0.6	2.7	18	13.5	0.7	32.1	
Passenger Vehicles	418	238	675	1331	117	492	547	1156	32	53	23	108	692	513	29	1234	3829
% Passenger Vehicles	96.5	100	96.8	97.3	95.9	88	95.3	92.1	100	100	100	100	95.7	94.6	100	95.4	95.1
Large 2 Axle Vehicles	5	0	14	19	4	45	14	63	0	0	0	0	13	18	0	31	113
% Large 2 Axle Vehicles	1.2	0	2	1.4	3.3	8.1	2.4	5	0	0	0	0	1.8	3.3	0	2.4	2.8
3 Axle Vehicles	2	0	3	5	1	8	2	11	0	0	0	0	7	7	0	14	30
% 3 Axle Vehicles	0.5	0	0.4	0.4	0.8	1.4	0.3	0.9	0	0	0	0	1	1.3	0	1.1	0.7
4+ Axle Trucks	8	0	5	13	0	14	11	25	0	0	0	0	11	4	0	15	53
% 4+ Axle Trucks	1.8	0	0.7	1	0	2.5	1.9	2	0	0	0	0	1.5	0.7	0	1.2	1.3

	Archibald Avenue Southbound				Airport Drive Westbound				Archibald Avenue Northbound				Airport Drive Eastbound				
Start Time	Left	Thru	Right	App. Total	Left	Thru	Right	App. Total	Left	Thru	Right	App. Total	Left	Thru	Right	App. Total	Int. Total
Peak Hour Analysis From 07:00 AM to 08:45 AM - Peak 1 of 1																	
Peak Hour for Entire Intersection Begins at 07:30 AM																	
07:30 AM	62	19	104	185	14	63	72	149	**6**	3	**4**	13	104	93	2	199	546
07:45 AM	**77**	24	**108**	**209**	13	**89**	**90**	**192**	3	8	4	15	**109**	**95**	7	**211**	**627**
08:00 AM	46	22	103	171	**18**	75	80	173	4	**10**	2	**16**	96	73	**10**	179	539
08:15 AM	63	**43**	84	190	7	78	84	169	5	9	2	16	106	61	1	168	543
Total Volume	248	108	399	755	52	305	326	683	18	30	12	60	415	322	20	757	2255
% App. Total	32.8	14.3	52.8		7.6	44.7	47.7		30	50	20		54.8	42.5	2.6		
PHF	.805	.628	.924	.903	.722	.857	.906	.889	.750	.750	.750	.938	.952	.847	.500	.897	.899

Counts Unlimited, Inc.
PO Box 1178
Corona, CA 92878
(951)268-6268

City of Ontario
N/S: Archibald Avenue
E/W: Airport Drive
Weather: Clear

File Name : 04_ONT_Arch_AP AM
Site Code : 00322818
Start Date : 9/20/2022
Page No : 2

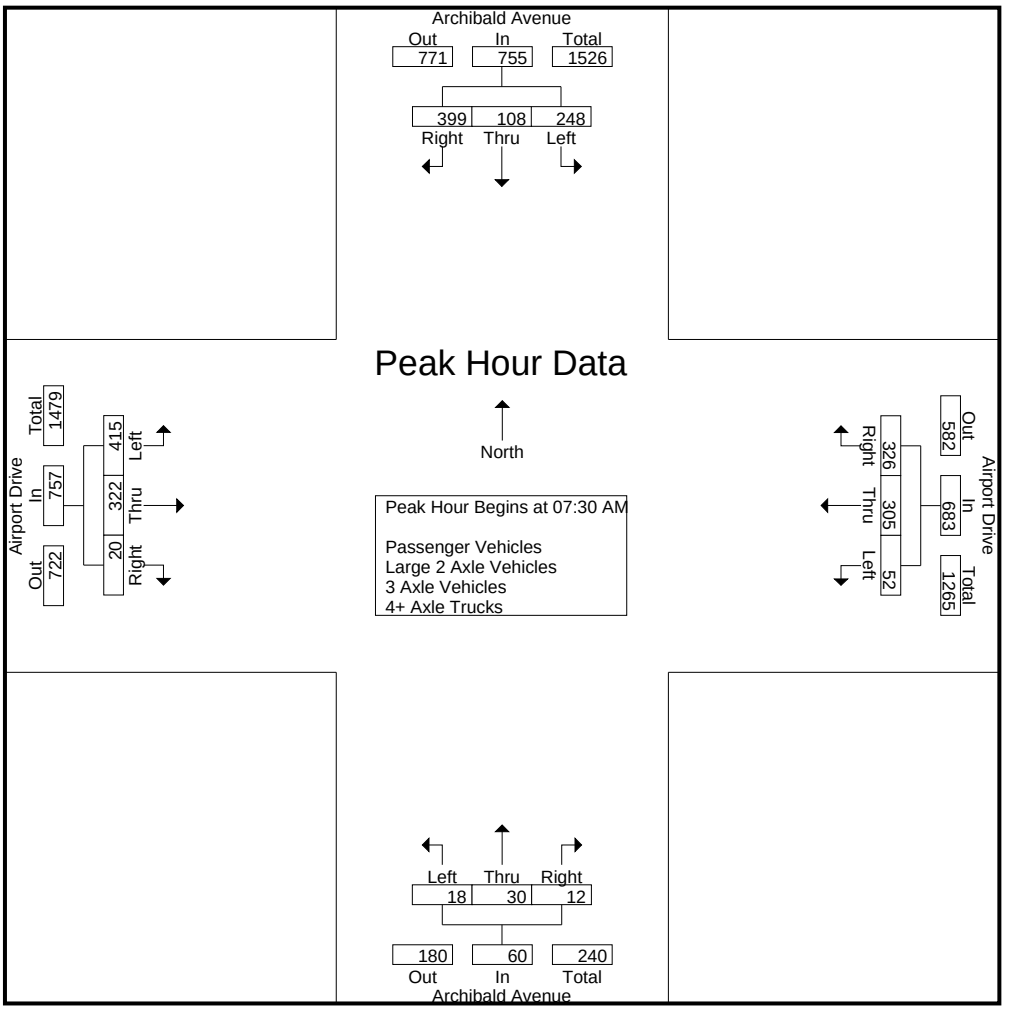

Peak Hour Analysis From 07:00 AM to 08:45 AM - Peak 1 of 1
Peak Hour for Each Approach Begins at:

	07:30 AM				07:45 AM				08:00 AM				07:30 AM			
+0 mins.	62	19	104	185	13	**89**	**90**	**192**	4	**10**	2	16	104	93	2	199
+15 mins.	**77**	24	**108**	**209**	18	75	80	173	5	9	2	16	**109**	**95**	7	**211**
+30 mins.	46	22	103	171	7	78	84	169	**7**	7	2	16	96	73	**10**	179
+45 mins.	63	**43**	84	190	**23**	67	84	174	5	10	**3**	**18**	106	61	1	168
Total Volume	248	108	399	755	61	309	338	708	21	36	9	66	415	322	20	757
% App. Total	32.8	14.3	52.8		8.6	43.6	47.7		31.8	54.5	13.6		54.8	42.5	2.6	
PHF	.805	.628	.924	.903	.663	.868	.939	.922	.750	.900	.750	.917	.952	.847	.500	.897

Counts Unlimited, Inc.
PO Box 1178
Corona, CA 92878
(951)268-6268

City of Ontario
N/S: Archibald Avenue
E/W: Airport Drive
Weather: Clear

File Name : 04_ONT_Arch_AP AM
Site Code : 00322818
Start Date : 9/20/2022
Page No : 1

Groups Printed- Passenger Vehicles

	Archibald Avenue Southbound				Airport Drive Westbound				Archibald Avenue Northbound				Airport Drive Eastbound				
Start Time	Left	Thru	Right	App. Total	Left	Thru	Right	App. Total	Left	Thru	Right	App. Total	Left	Thru	Right	App. Total	Int. Total
07:00 AM	45	31	78	154	11	50	48	109	1	2	4	7	59	59	0	118	388
07:15 AM	50	14	89	153	17	66	37	120	1	4	2	7	59	57	0	116	396
07:30 AM	62	19	102	183	14	53	71	138	6	3	4	13	103	89	2	194	528
07:45 AM	76	24	105	205	13	80	86	179	3	8	4	15	104	91	7	202	601
Total	233	88	374	695	55	249	242	546	11	17	14	42	325	296	9	630	1913
08:00 AM	42	22	101	165	18	66	73	157	4	10	2	16	95	68	10	173	511
08:15 AM	63	43	80	186	7	67	81	155	5	9	2	16	102	60	1	163	520
08:30 AM	36	27	64	127	23	62	81	166	7	7	2	16	85	51	4	140	449
08:45 AM	44	58	56	158	14	48	70	132	5	10	3	18	85	38	5	128	436
Total	185	150	301	636	62	243	305	610	21	36	9	66	367	217	20	604	1916
Grand Total	418	238	675	1331	117	492	547	1156	32	53	23	108	692	513	29	1234	3829
Apprch %	31.4	17.9	50.7		10.1	42.6	47.3		29.6	49.1	21.3		56.1	41.6	2.4		
Total %	10.9	6.2	17.6	34.8	3.1	12.8	14.3	30.2	0.8	1.4	0.6	2.8	18.1	13.4	0.8	32.2	

	Archibald Avenue Southbound				Airport Drive Westbound				Archibald Avenue Northbound				Airport Drive Eastbound				
Start Time	Left	Thru	Right	App. Total	Left	Thru	Right	App. Total	Left	Thru	Right	App. Total	Left	Thru	Right	App. Total	Int. Total
Peak Hour Analysis From 07:30 AM to 08:15 AM - Peak 1 of 1																	
Peak Hour for Entire Intersection Begins at 07:30 AM																	
07:30 AM	62	19	102	183	14	53	71	138	**6**	3	**4**	13	103	89	2	194	528
07:45 AM	**76**	24	**105**	**205**	13	**80**	**86**	**179**	3	8	4	15	**104**	**91**	7	**202**	**601**
08:00 AM	42	22	101	165	**18**	66	73	157	4	**10**	2	**16**	95	68	**10**	173	511
08:15 AM	63	**43**	80	186	7	67	81	155	5	9	2	16	102	60	1	163	520
Total Volume	243	108	388	739	52	266	311	629	18	30	12	60	404	308	20	732	2160
% App. Total	32.9	14.6	52.5		8.3	42.3	49.4		30	50	20		55.2	42.1	2.7		
PHF	.799	.628	.924	.901	.722	.831	.904	.878	.750	.750	.750	.938	.971	.846	.500	.906	.899

Counts Unlimited, Inc.
PO Box 1178
Corona, CA 92878
(951)268-6268

City of Ontario
N/S: Archibald Avenue
E/W: Airport Drive
Weather: Clear

File Name : 04_ONT_Arch_AP AM
Site Code : 00322818
Start Date : 9/20/2022
Page No : 2

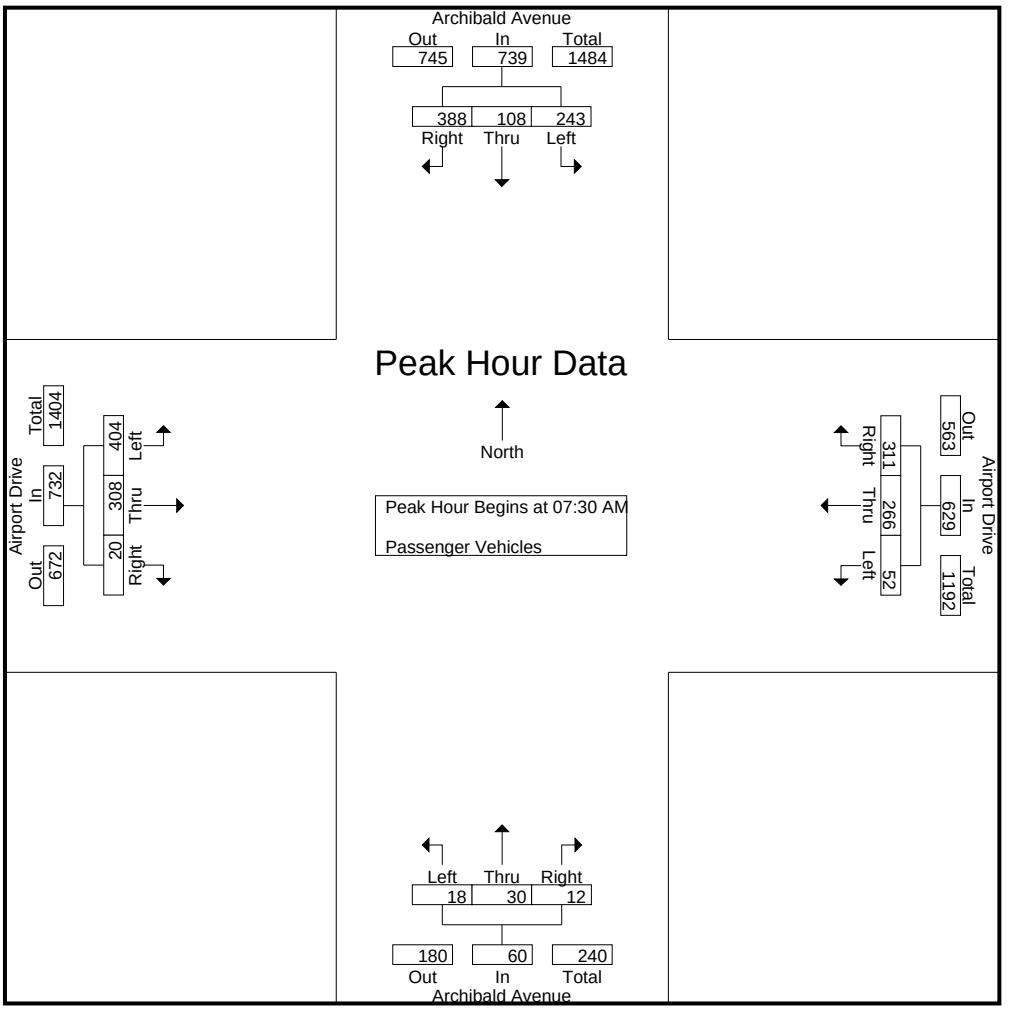

Peak Hour Analysis From 07:30 AM to 08:15 AM - Peak 1 of 1
Peak Hour for Each Approach Begins at:

	07:30 AM				07:30 AM				07:30 AM				07:30 AM			
+0 mins.	62	19	102	183	14	53	71	138	**6**	3	**4**	13	103	89	2	194
+15 mins.	**76**	24	**105**	**205**	13	**80**	**86**	**179**	3	8	4	15	**104**	**91**	7	**202**
+30 mins.	42	22	101	165	**18**	66	73	157	4	**10**	2	**16**	95	68	**10**	173
+45 mins.	63	**43**	80	186	7	67	81	155	5	9	2	16	102	60	1	163
Total Volume	243	108	388	739	52	266	311	629	18	30	12	60	404	308	20	732
% App. Total	32.9	14.6	52.5		8.3	42.3	49.4		30	50	20		55.2	42.1	2.7	
PHF	.799	.628	.924	.901	.722	.831	.904	.878	.750	.750	.750	.938	.971	.846	.500	.906

Counts Unlimited, Inc.
PO Box 1178
Corona, CA 92878
(951)268-6268

City of Ontario
N/S: Archibald Avenue
E/W: Airport Drive
Weather: Clear

File Name : 04_ONT_Arch_AP AM
Site Code : 00322818
Start Date : 9/20/2022
Page No : 1

Groups Printed- Large 2 Axle Vehicles

	Archibald Avenue Southbound				Airport Drive Westbound				Archibald Avenue Northbound				Airport Drive Eastbound				
Start Time	Left	Thru	Right	App. Total	Left	Thru	Right	App. Total	Left	Thru	Right	App. Total	Left	Thru	Right	App. Total	Int. Total
07:00 AM	1	0	2	3	2	5	1	8	0	0	0	0	2	4	0	6	17
07:15 AM	2	0	2	4	1	6	1	8	0	0	0	0	1	1	0	2	14
07:30 AM	0	0	2	2	0	8	0	8	0	0	0	0	1	3	0	4	14
07:45 AM	1	0	1	2	0	5	2	7	0	0	0	0	2	3	0	5	14
Total	4	0	7	11	3	24	4	31	0	0	0	0	6	11	0	17	59
08:00 AM	1	0	1	2	0	6	4	10	0	0	0	0	1	4	0	5	17
08:15 AM	0	0	3	3	0	8	1	9	0	0	0	0	3	1	0	4	16
08:30 AM	0	0	2	2	0	2	2	4	0	0	0	0	1	1	0	2	8
08:45 AM	0	0	1	1	1	5	3	9	0	0	0	0	2	1	0	3	13
Total	1	0	7	8	1	21	10	32	0	0	0	0	7	7	0	14	54
Grand Total	5	0	14	19	4	45	14	63	0	0	0	0	13	18	0	31	113
Apprch %	26.3	0	73.7		6.3	71.4	22.2		0	0	0		41.9	58.1	0		
Total %	4.4	0	12.4	16.8	3.5	39.8	12.4	55.8	0	0	0	0	11.5	15.9	0	27.4	

	Archibald Avenue Southbound				Airport Drive Westbound				Archibald Avenue Northbound				Airport Drive Eastbound				
Start Time	Left	Thru	Right	App. Total	Left	Thru	Right	App. Total	Left	Thru	Right	App. Total	Left	Thru	Right	App. Total	Int. Total
Peak Hour Analysis From 07:30 AM to 08:15 AM - Peak 1 of 1																	
Peak Hour for Entire Intersection Begins at 07:30 AM																	
07:30 AM	0	0	2	2	0	**8**	0	8	0	0	0	0	1	3	0	4	14
07:45 AM	**1**	0	1	2	0	5	2	7	0	0	0	0	2	3	0	**5**	14
08:00 AM	1	0	1	2	0	6	**4**	**10**	0	0	0	0	1	**4**	0	5	**17**
08:15 AM	0	0	**3**	**3**	0	8	1	9	0	0	0	0	**3**	1	0	4	16
Total Volume	2	0	7	9	0	27	7	34	0	0	0	0	7	11	0	18	61
% App. Total	22.2	0	77.8		0	79.4	20.6		0	0	0		38.9	61.1	0		
PHF	.500	.000	.583	.750	.000	.844	.438	.850	.000	.000	.000	.000	.583	.688	.000	.900	.897

Counts Unlimited, Inc.
PO Box 1178
Corona, CA 92878
(951)268-6268

City of Ontario
N/S: Archibald Avenue
E/W: Airport Drive
Weather: Clear

File Name : 04_ONT_Arch_AP AM
Site Code : 00322818
Start Date : 9/20/2022
Page No : 2

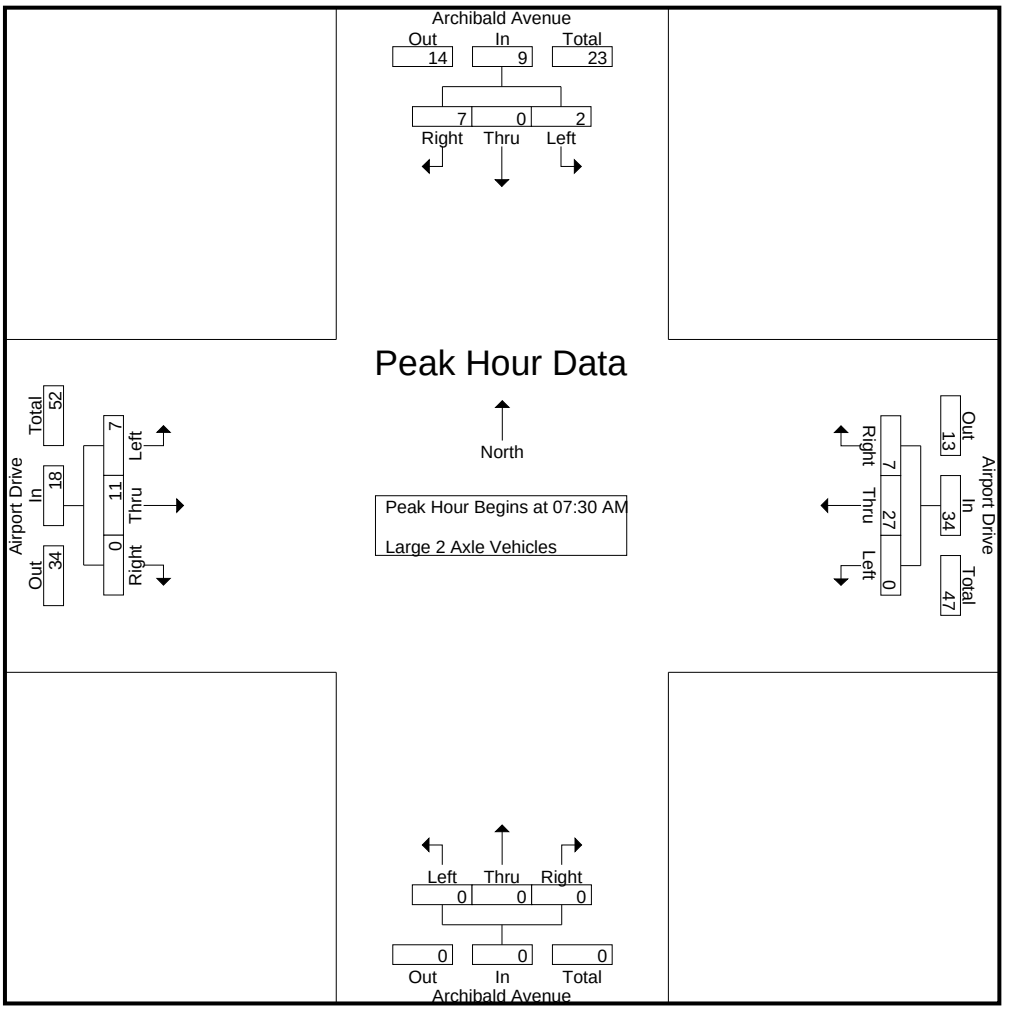

Peak Hour Analysis From 07:30 AM to 08:15 AM - Peak 1 of 1
Peak Hour for Each Approach Begins at:

	07:30 AM				07:30 AM				07:30 AM				07:30 AM			
+0 mins.	0	0	2	2	0	**8**	0	8	0	0	0	0	1	3	0	4
+15 mins.	**1**	0	1	2	0	5	2	7	0	0	0	0	2	3	0	**5**
+30 mins.	1	0	1	2	0	6	**4**	**10**	0	0	0	0	1	**4**	0	5
+45 mins.	0	0	**3**	**3**	0	8	1	9	0	0	0	0	**3**	1	0	4
Total Volume	2	0	7	9	0	27	7	34	0	0	0	0	7	11	0	18
% App. Total	22.2	0	77.8		0	79.4	20.6		0	0	0		38.9	61.1	0	
PHF	.500	.000	.583	.750	.000	.844	.438	.850	.000	.000	.000	.000	.583	.688	.000	.900

Counts Unlimited, Inc.
PO Box 1178
Corona, CA 92878
(951)268-6268

City of Ontario
N/S: Archibald Avenue
E/W: Airport Drive
Weather: Clear

File Name : 04_ONT_Arch_AP AM
Site Code : 00322818
Start Date : 9/20/2022
Page No : 1

Groups Printed- 3 Axle Vehicles

	Archibald Avenue Southbound				Airport Drive Westbound				Archibald Avenue Northbound				Airport Drive Eastbound				
Start Time	Left	Thru	Right	App. Total	Left	Thru	Right	App. Total	Left	Thru	Right	App. Total	Left	Thru	Right	App. Total	Int. Total
07:00 AM	0	0	0	0	1	1	0	2	0	0	0	0	3	1	0	4	6
07:15 AM	0	0	1	1	0	0	1	1	0	0	0	0	2	1	0	3	5
07:30 AM	0	0	0	0	0	1	0	1	0	0	0	0	0	1	0	1	2
07:45 AM	0	0	1	1	0	0	0	0	0	0	0	0	1	1	0	2	3
Total	0	0	2	2	1	2	1	4	0	0	0	0	6	4	0	10	16
08:00 AM	1	0	1	2	0	0	1	1	0	0	0	0	0	0	0	0	3
08:15 AM	0	0	0	0	0	1	0	1	0	0	0	0	0	0	0	0	1
08:30 AM	1	0	0	1	0	2	0	2	0	0	0	0	0	1	0	1	4
08:45 AM	0	0	0	0	0	3	0	3	0	0	0	0	1	2	0	3	6
Total	2	0	1	3	0	6	1	7	0	0	0	0	1	3	0	4	14
Grand Total	2	0	3	5	1	8	2	11	0	0	0	0	7	7	0	14	30
Apprch %	40	0	60		9.1	72.7	18.2		0	0	0		50	50	0		
Total %	6.7	0	10	16.7	3.3	26.7	6.7	36.7	0	0	0	0	23.3	23.3	0	46.7	

	Archibald Avenue Southbound				Airport Drive Westbound				Archibald Avenue Northbound				Airport Drive Eastbound				
Start Time	Left	Thru	Right	App. Total	Left	Thru	Right	App. Total	Left	Thru	Right	App. Total	Left	Thru	Right	App. Total	Int. Total
Peak Hour Analysis From 07:30 AM to 08:15 AM - Peak 1 of 1																	
Peak Hour for Entire Intersection Begins at 07:30 AM																	
07:30 AM	0	0	0	0	0	**1**	0	**1**	0	0	0	0	0	**1**	0	1	2
07:45 AM	0	0	**1**	1	0	0	0	0	0	0	0	0	**1**	1	0	**2**	**3**
08:00 AM	**1**	0	1	**2**	0	0	**1**	1	0	0	0	0	0	0	0	0	3
08:15 AM	0	0	0	0	0	1	0	1	0	0	0	0	0	0	0	0	1
Total Volume	1	0	2	3	0	2	1	3	0	0	0	0	1	2	0	3	9
% App. Total	33.3	0	66.7		0	66.7	33.3		0	0	0		33.3	66.7	0		
PHF	.250	.000	.500	.375	.000	.500	.250	.750	.000	.000	.000	.000	.250	.500	.000	.375	.750

Counts Unlimited, Inc.
PO Box 1178
Corona, CA 92878
(951)268-6268

City of Ontario
N/S: Archibald Avenue
E/W: Airport Drive
Weather: Clear

File Name : 04_ONT_Arch_AP AM
Site Code : 00322818
Start Date : 9/20/2022
Page No : 2

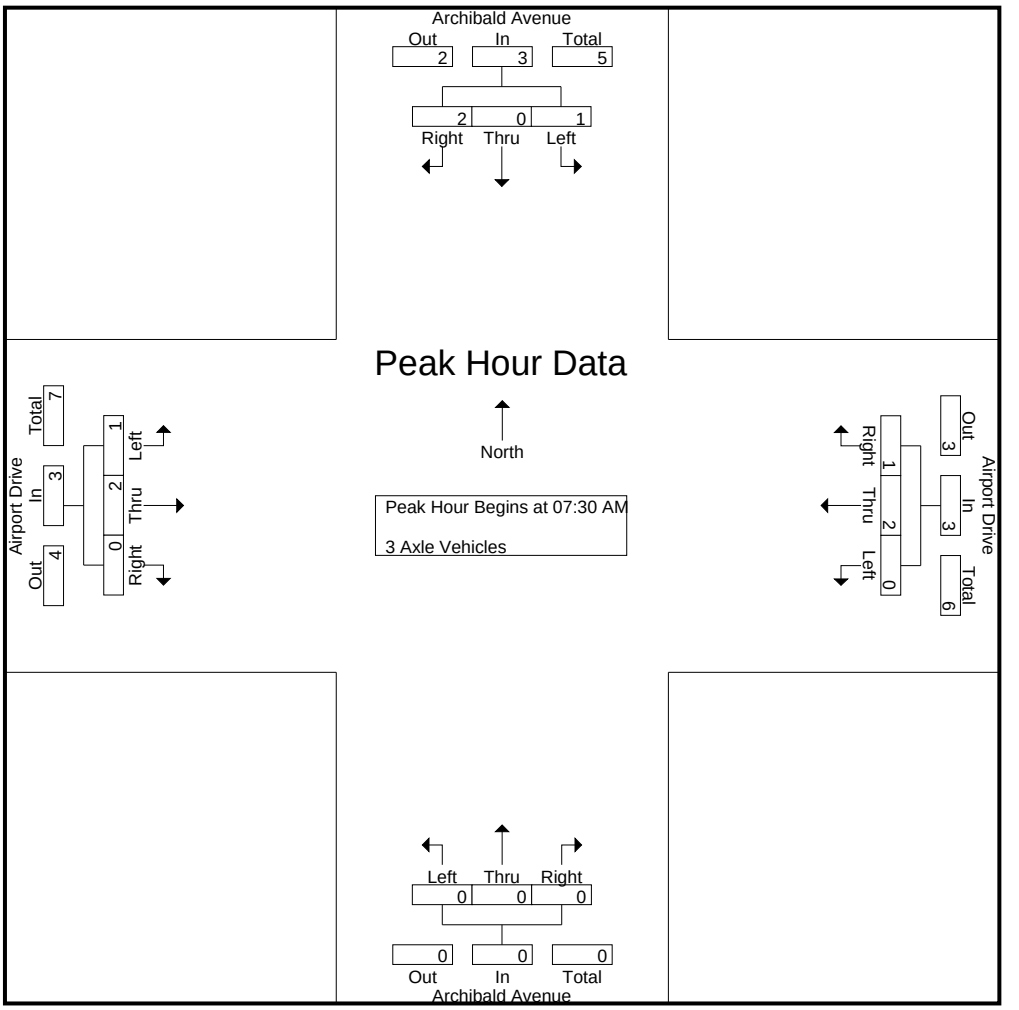

Peak Hour Analysis From 07:30 AM to 08:15 AM - Peak 1 of 1
Peak Hour for Each Approach Begins at:

	07:30 AM				07:30 AM				07:30 AM				07:30 AM			
+0 mins.	0	0	0	0	0	**1**	0	**1**	0	0	0	0	0	**1**	0	1
+15 mins.	0	0	**1**	1	0	0	0	0	0	0	0	0	**1**	1	0	**2**
+30 mins.	**1**	0	1	**2**	0	0	**1**	1	0	0	0	0	0	0	0	0
+45 mins.	0	0	0	0	0	1	0	1	0	0	0	0	0	0	0	0
Total Volume	1	0	2	3	0	2	1	3	0	0	0	0	1	2	0	3
% App. Total	33.3	0	66.7		0	66.7	33.3		0	0	0		33.3	66.7	0	
PHF	.250	.000	.500	.375	.000	.500	.250	.750	.000	.000	.000	.000	.250	.500	.000	.375

Counts Unlimited, Inc.
PO Box 1178
Corona, CA 92878
(951)268-6268

City of Ontario
N/S: Archibald Avenue
E/W: Airport Drive
Weather: Clear

File Name : 04_ONT_Arch_AP AM
Site Code : 00322818
Start Date : 9/20/2022
Page No : 1

Groups Printed- 4+ Axle Trucks

	Archibald Avenue Southbound				Airport Drive Westbound				Archibald Avenue Northbound				Airport Drive Eastbound				
Start Time	Left	Thru	Right	App. Total	Left	Thru	Right	App. Total	Left	Thru	Right	App. Total	Left	Thru	Right	App. Total	Int. Total
07:00 AM	2	0	0	2	0	1	0	1	0	0	0	0	0	0	0	0	3
07:15 AM	1	0	0	1	0	0	1	1	0	0	0	0	1	0	0	1	3
07:30 AM	0	0	0	0	0	1	1	2	0	0	0	0	0	0	0	0	2
07:45 AM	0	0	1	1	0	4	2	6	0	0	0	0	2	0	0	2	9
Total	3	0	1	4	0	6	4	10	0	0	0	0	3	0	0	3	17
08:00 AM	2	0	0	2	0	3	2	5	0	0	0	0	0	1	0	1	8
08:15 AM	0	0	1	1	0	2	2	4	0	0	0	0	1	0	0	1	6
08:30 AM	2	0	2	4	0	1	1	2	0	0	0	0	4	1	0	5	11
08:45 AM	1	0	1	2	0	2	2	4	0	0	0	0	3	2	0	5	11
Total	5	0	4	9	0	8	7	15	0	0	0	0	8	4	0	12	36
Grand Total	8	0	5	13	0	14	11	25	0	0	0	0	11	4	0	15	53
Apprch %	61.5	0	38.5		0	56	44		0	0	0		73.3	26.7	0		
Total %	15.1	0	9.4	24.5	0	26.4	20.8	47.2	0	0	0	0	20.8	7.5	0	28.3	

	Archibald Avenue Southbound				Airport Drive Westbound				Archibald Avenue Northbound				Airport Drive Eastbound				
Start Time	Left	Thru	Right	App. Total	Left	Thru	Right	App. Total	Left	Thru	Right	App. Total	Left	Thru	Right	App. Total	Int. Total
Peak Hour Analysis From 07:30 AM to 08:15 AM - Peak 1 of 1																	
Peak Hour for Entire Intersection Begins at 07:30 AM																	
07:30 AM	0	0	0	0	0	1	1	2	0	0	0	0	0	0	0	0	2
07:45 AM	0	0	**1**	1	0	**4**	**2**	**6**	0	0	0	0	**2**	0	0	**2**	**9**
08:00 AM	**2**	0	0	**2**	0	3	2	5	0	0	0	0	0	**1**	0	1	8
08:15 AM	0	0	1	1	0	2	2	4	0	0	0	0	1	0	0	1	6
Total Volume	2	0	2	4	0	10	7	17	0	0	0	0	3	1	0	4	25
% App. Total	50	0	50		0	58.8	41.2		0	0	0		75	25	0		
PHF	.250	.000	.500	.500	.000	.625	.875	.708	.000	.000	.000	.000	.375	.250	.000	.500	.694

Counts Unlimited, Inc.
PO Box 1178
Corona, CA 92878
(951)268-6268

City of Ontario
N/S: Archibald Avenue
E/W: Airport Drive
Weather: Clear

File Name : 04_ONT_Arch_AP AM
Site Code : 00322818
Start Date : 9/20/2022
Page No : 2

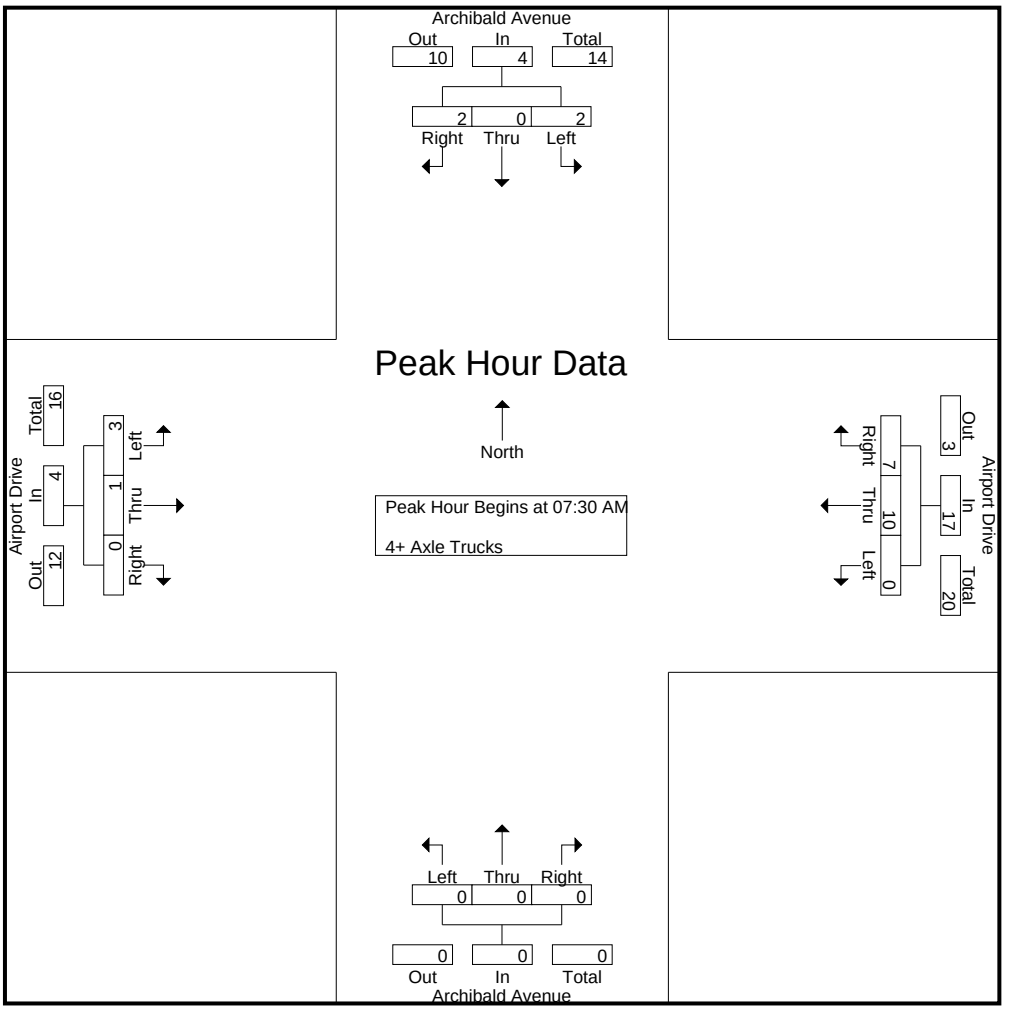

Peak Hour Analysis From 07:30 AM to 08:15 AM - Peak 1 of 1
Peak Hour for Each Approach Begins at:

	07:30 AM				07:30 AM				07:30 AM				07:30 AM			
+0 mins.	0	0	0	0	0	1	1	2	0	0	0	0	0	0	0	0
+15 mins.	0	0	**1**	1	0	**4**	**2**	**6**	0	0	0	0	**2**	0	0	**2**
+30 mins.	**2**	0	0	**2**	0	3	2	5	0	0	0	0	0	**1**	0	1
+45 mins.	0	0	1	1	0	2	2	4	0	0	0	0	1	0	0	1
Total Volume	2	0	2	4	0	10	7	17	0	0	0	0	3	1	0	4
% App. Total	50	0	50		0	58.8	41.2		0	0	0		75	25	0	
PHF	.250	.000	.500	.500	.000	.625	.875	.708	.000	.000	.000	.000	.375	.250	.000	.500

Counts Unlimited, Inc.
PO Box 1178
Corona, CA 92878
(951)268-6268

City of Ontario
N/S: Archibald Avenue
E/W: Airport Drive
Weather: Clear

File Name : 04_ONT_Arch_AP PM
Site Code : 00322818
Start Date : 9/20/2022
Page No : 1

Groups Printed- Passenger Vehicles - Large 2 Axle Vehicles - 3 Axle Vehicles - 4+ Axle Trucks

	Archibald Avenue Southbound				Airport Drive Westbound				Archibald Avenue Northbound				Airport Drive Eastbound				
Start Time	Left	Thru	Right	App. Total	Left	Thru	Right	App. Total	Left	Thru	Right	App. Total	Left	Thru	Right	App. Total	Int. Total
04:00 PM	91	20	71	182	21	102	96	219	1	15	5	21	193	158	3	354	776
04:15 PM	85	32	81	198	11	115	116	242	2	17	13	32	179	172	7	358	830
04:30 PM	94	23	87	204	15	104	136	255	0	19	17	36	194	196	1	391	886
04:45 PM	80	29	79	188	13	103	130	246	7	9	7	23	170	165	6	341	798
Total	350	104	318	772	60	424	478	962	10	60	42	112	736	691	17	1444	3290
05:00 PM	107	14	98	219	17	104	104	225	3	29	12	44	168	157	3	328	816
05:15 PM	105	26	107	238	15	90	89	194	2	11	2	15	163	144	3	310	757
05:30 PM	89	25	69	183	17	78	80	175	6	14	14	34	174	144	4	322	714
05:45 PM	88	21	64	173	5	79	49	133	3	5	4	12	160	118	5	283	601
Total	389	86	338	813	54	351	322	727	14	59	32	105	665	563	15	1243	2888
Grand Total	739	190	656	1585	114	775	800	1689	24	119	74	217	1401	1254	32	2687	6178
Apprch %	46.6	12	41.4		6.7	45.9	47.4		11.1	54.8	34.1		52.1	46.7	1.2		
Total %	12	3.1	10.6	25.7	1.8	12.5	12.9	27.3	0.4	1.9	1.2	3.5	22.7	20.3	0.5	43.5	
Passenger Vehicles	680	190	618	1488	114	707	778	1599	24	119	74	217	1357	1164	32	2553	5857
% Passenger Vehicles	92	100	94.2	93.9	100	91.2	97.2	94.7	100	100	100	100	96.9	92.8	100	95	94.8
Large 2 Axle Vehicles	27	0	21	48	0	56	11	67	0	0	0	0	20	43	0	63	178
% Large 2 Axle Vehicles	3.7	0	3.2	3	0	7.2	1.4	4	0	0	0	0	1.4	3.4	0	2.3	2.9
3 Axle Vehicles	10	0	3	13	0	7	3	10	0	0	0	0	5	17	0	22	45
% 3 Axle Vehicles	1.4	0	0.5	0.8	0	0.9	0.4	0.6	0	0	0	0	0.4	1.4	0	0.8	0.7
4+ Axle Trucks	22	0	14	36	0	5	8	13	0	0	0	0	19	30	0	49	98
% 4+ Axle Trucks	3	0	2.1	2.3	0	0.6	1	0.8	0	0	0	0	1.4	2.4	0	1.8	1.6

	Archibald Avenue Southbound				Airport Drive Westbound				Archibald Avenue Northbound				Airport Drive Eastbound				
Start Time	Left	Thru	Right	App. Total	Left	Thru	Right	App. Total	Left	Thru	Right	App. Total	Left	Thru	Right	App. Total	Int. Total
Peak Hour Analysis From 04:00 PM to 05:45 PM - Peak 1 of 1																	
Peak Hour for Entire Intersection Begins at 04:15 PM																	
04:15 PM	85	**32**	81	198	11	**115**	116	242	2	17	13	32	179	172	**7**	358	830
04:30 PM	94	23	87	204	15	104	**136**	**255**	0	19	**17**	36	**194**	**196**	1	**391**	**886**
04:45 PM	80	29	79	188	13	103	130	246	**7**	9	7	23	170	165	6	341	798
05:00 PM	**107**	14	**98**	**219**	**17**	104	104	225	3	**29**	12	**44**	168	157	3	328	816
Total Volume	366	98	345	809	56	426	486	968	12	74	49	135	711	690	17	1418	3330
% App. Total	45.2	12.1	42.6		5.8	44	50.2		8.9	54.8	36.3		50.1	48.7	1.2		
PHF	.855	.766	.880	.924	.824	.926	.893	.949	.429	.638	.721	.767	.916	.880	.607	.907	.940

Counts Unlimited, Inc.
PO Box 1178
Corona, CA 92878
(951)268-6268

City of Ontario
N/S: Archibald Avenue
E/W: Airport Drive
Weather: Clear

File Name : 04_ONT_Arch_AP PM
Site Code : 00322818
Start Date : 9/20/2022
Page No : 2

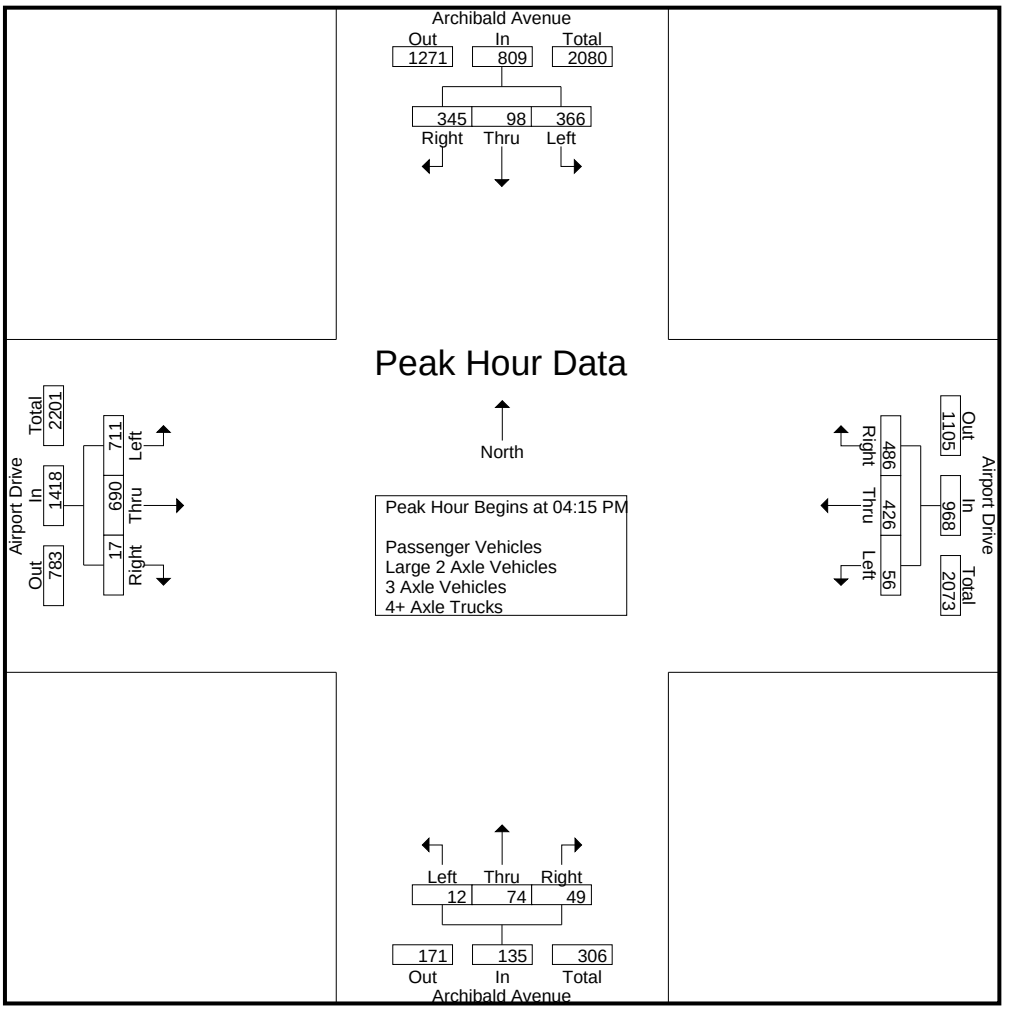

Peak Hour Analysis From 04:00 PM to 05:45 PM - Peak 1 of 1
Peak Hour for Each Approach Begins at:

	04:30 PM				04:15 PM				04:15 PM				04:00 PM			
+0 mins.	94	23	87	204	11	**115**	116	242	2	17	13	32	193	158	3	354
+15 mins.	80	**29**	79	188	15	104	**136**	**255**	0	19	**17**	36	179	172	**7**	358
+30 mins.	**107**	14	98	219	13	103	130	246	**7**	9	7	23	**194**	**196**	1	**391**
+45 mins.	105	26	**107**	**238**	**17**	104	104	225	3	**29**	12	**44**	170	165	6	341
Total Volume	386	92	371	849	56	426	486	968	12	74	49	135	736	691	17	1444
% App. Total	45.5	10.8	43.7		5.8	44	50.2		8.9	54.8	36.3		51	47.9	1.2	
PHF	.902	.793	.867	.892	.824	.926	.893	.949	.429	.638	.721	.767	.948	.881	.607	.923

Counts Unlimited, Inc.
PO Box 1178
Corona, CA 92878
(951)268-6268

City of Ontario
N/S: Archibald Avenue
E/W: Airport Drive
Weather: Clear

File Name : 04_ONT_Arch_AP PM
Site Code : 00322818
Start Date : 9/20/2022
Page No : 1

Groups Printed- Passenger Vehicles

	Archibald Avenue Southbound				Airport Drive Westbound				Archibald Avenue Northbound				Airport Drive Eastbound				
Start Time	Left	Thru	Right	App. Total	Left	Thru	Right	App. Total	Left	Thru	Right	App. Total	Left	Thru	Right	App. Total	Int. Total
04:00 PM	84	20	68	172	21	96	92	209	1	15	5	21	186	151	3	340	742
04:15 PM	78	32	76	186	11	105	114	230	2	17	13	32	177	156	7	340	788
04:30 PM	85	23	81	189	15	97	135	247	0	19	17	36	186	176	1	363	835
04:45 PM	70	29	76	175	13	91	126	230	7	9	7	23	165	151	6	322	750
Total	317	104	301	722	60	389	467	916	10	60	42	112	714	634	17	1365	3115
05:00 PM	101	14	92	207	17	94	100	211	3	29	12	44	161	147	3	311	773
05:15 PM	100	26	101	227	15	84	85	184	2	11	2	15	161	137	3	301	727
05:30 PM	83	25	65	173	17	71	77	165	6	14	14	34	170	136	4	310	682
05:45 PM	79	21	59	159	5	69	49	123	3	5	4	12	151	110	5	266	560
Total	363	86	317	766	54	318	311	683	14	59	32	105	643	530	15	1188	2742
Grand Total	680	190	618	1488	114	707	778	1599	24	119	74	217	1357	1164	32	2553	5857
Apprch %	45.7	12.8	41.5		7.1	44.2	48.7		11.1	54.8	34.1		53.2	45.6	1.3		
Total %	11.6	3.2	10.6	25.4	1.9	12.1	13.3	27.3	0.4	2	1.3	3.7	23.2	19.9	0.5	43.6	

	Archibald Avenue Southbound				Airport Drive Westbound				Archibald Avenue Northbound				Airport Drive Eastbound				
Start Time	Left	Thru	Right	App. Total	Left	Thru	Right	App. Total	Left	Thru	Right	App. Total	Left	Thru	Right	App. Total	Int. Total
Peak Hour Analysis From 04:15 PM to 05:00 PM - Peak 1 of 1																	
Peak Hour for Entire Intersection Begins at 04:15 PM																	
04:15 PM	78	**32**	76	186	11	**105**	114	230	2	17	13	32	177	156	**7**	340	788
04:30 PM	85	23	81	189	15	97	**135**	**247**	0	19	**17**	36	**186**	**176**	1	**363**	**835**
04:45 PM	70	29	76	175	13	91	126	230	**7**	9	7	23	165	151	6	322	750
05:00 PM	**101**	14	**92**	**207**	**17**	94	100	211	3	**29**	12	**44**	161	147	3	311	773
Total Volume	334	98	325	757	56	387	475	918	12	74	49	135	689	630	17	1336	3146
% App. Total	44.1	12.9	42.9		6.1	42.2	51.7		8.9	54.8	36.3		51.6	47.2	1.3		
PHF	.827	.766	.883	.914	.824	.921	.880	.929	.429	.638	.721	.767	.926	.895	.607	.920	.942

Counts Unlimited, Inc.
PO Box 1178
Corona, CA 92878
(951)268-6268

City of Ontario
N/S: Archibald Avenue
E/W: Airport Drive
Weather: Clear

File Name : 04_ONT_Arch_AP PM
Site Code : 00322818
Start Date : 9/20/2022
Page No : 2

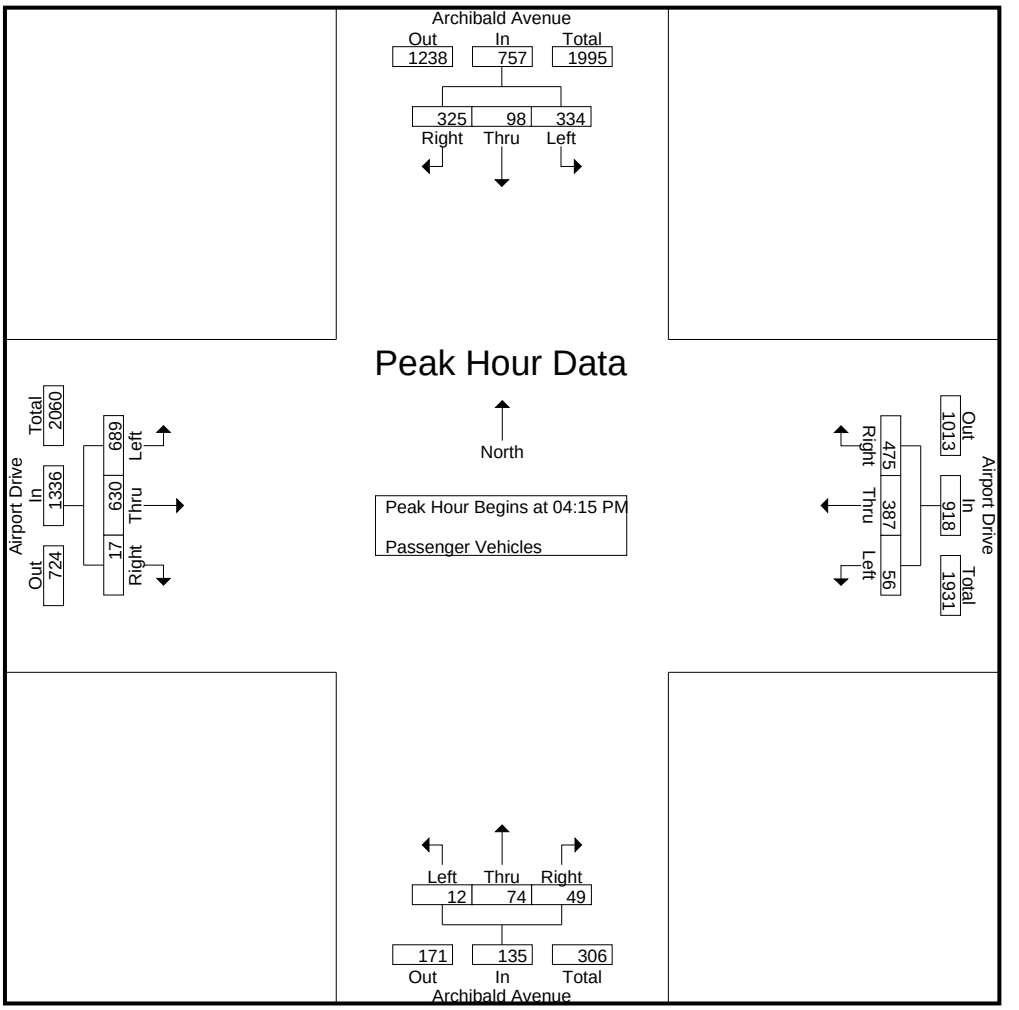

Peak Hour Analysis From 04:15 PM to 05:00 PM - Peak 1 of 1
Peak Hour for Each Approach Begins at:

	04:15 PM				04:15 PM				04:15 PM				04:15 PM			
+0 mins.	78	**32**	76	186	11	**105**	114	230	2	17	13	32	177	156	**7**	340
+15 mins.	85	23	81	189	15	97	**135**	**247**	0	19	**17**	36	**186**	**176**	1	**363**
+30 mins.	70	29	76	175	13	91	126	230	**7**	9	7	23	165	151	6	322
+45 mins.	**101**	14	**92**	**207**	**17**	94	100	211	3	**29**	12	**44**	161	147	3	311
Total Volume	334	98	325	757	56	387	475	918	12	74	49	135	689	630	17	1336
% App. Total	44.1	12.9	42.9		6.1	42.2	51.7		8.9	54.8	36.3		51.6	47.2	1.3	
PHF	.827	.766	.883	.914	.824	.921	.880	.929	.429	.638	.721	.767	.926	.895	.607	.920

Counts Unlimited, Inc.
PO Box 1178
Corona, CA 92878
(951)268-6268

City of Ontario
N/S: Archibald Avenue
E/W: Airport Drive
Weather: Clear

File Name : 04_ONT_Arch_AP PM
Site Code : 00322818
Start Date : 9/20/2022
Page No : 1

Groups Printed- Large 2 Axle Vehicles

	Archibald Avenue Southbound				Airport Drive Westbound				Archibald Avenue Northbound				Airport Drive Eastbound				
Start Time	Left	Thru	Right	App. Total	Left	Thru	Right	App. Total	Left	Thru	Right	App. Total	Left	Thru	Right	App. Total	Int. Total
04:00 PM	5	0	1	6	0	5	3	8	0	0	0	0	3	1	0	4	18
04:15 PM	2	0	2	4	0	7	1	8	0	0	0	0	1	7	0	8	20
04:30 PM	3	0	4	7	0	6	1	7	0	0	0	0	3	10	0	13	27
04:45 PM	3	0	2	5	0	8	1	9	0	0	0	0	2	7	0	9	23
Total	13	0	9	22	0	26	6	32	0	0	0	0	9	25	0	34	88
05:00 PM	4	0	4	8	0	8	2	10	0	0	0	0	4	2	0	6	24
05:15 PM	3	0	4	7	0	6	2	8	0	0	0	0	1	5	0	6	21
05:30 PM	3	0	2	5	0	7	1	8	0	0	0	0	1	5	0	6	19
05:45 PM	4	0	2	6	0	9	0	9	0	0	0	0	5	6	0	11	26
Total	14	0	12	26	0	30	5	35	0	0	0	0	11	18	0	29	90
Grand Total	27	0	21	48	0	56	11	67	0	0	0	0	20	43	0	63	178
Apprch %	56.2	0	43.8		0	83.6	16.4		0	0	0		31.7	68.3	0		
Total %	15.2	0	11.8	27	0	31.5	6.2	37.6	0	0	0	0	11.2	24.2	0	35.4	

	Archibald Avenue Southbound				Airport Drive Westbound				Archibald Avenue Northbound				Airport Drive Eastbound				
Start Time	Left	Thru	Right	App. Total	Left	Thru	Right	App. Total	Left	Thru	Right	App. Total	Left	Thru	Right	App. Total	Int. Total
Peak Hour Analysis From 04:15 PM to 05:00 PM - Peak 1 of 1																	
Peak Hour for Entire Intersection Begins at 04:15 PM																	
04:15 PM	2	0	2	4	0	7	1	8	0	0	0	0	1	7	0	8	20
04:30 PM	3	0	**4**	7	0	6	1	7	0	0	0	0	3	**10**	0	**13**	**27**
04:45 PM	3	0	2	5	0	**8**	1	9	0	0	0	0	2	7	0	9	23
05:00 PM	**4**	0	4	**8**	0	8	**2**	**10**	0	0	0	0	**4**	2	0	6	24
Total Volume	12	0	12	24	0	29	5	34	0	0	0	0	10	26	0	36	94
% App. Total	50	0	50		0	85.3	14.7		0	0	0		27.8	72.2	0		
PHF	.750	.000	.750	.750	.000	.906	.625	.850	.000	.000	.000	.000	.625	.650	.000	.692	.870

Counts Unlimited, Inc.
PO Box 1178
Corona, CA 92878
(951)268-6268

City of Ontario
N/S: Archibald Avenue
E/W: Airport Drive
Weather: Clear

File Name : 04_ONT_Arch_AP PM
Site Code : 00322818
Start Date : 9/20/2022
Page No : 2

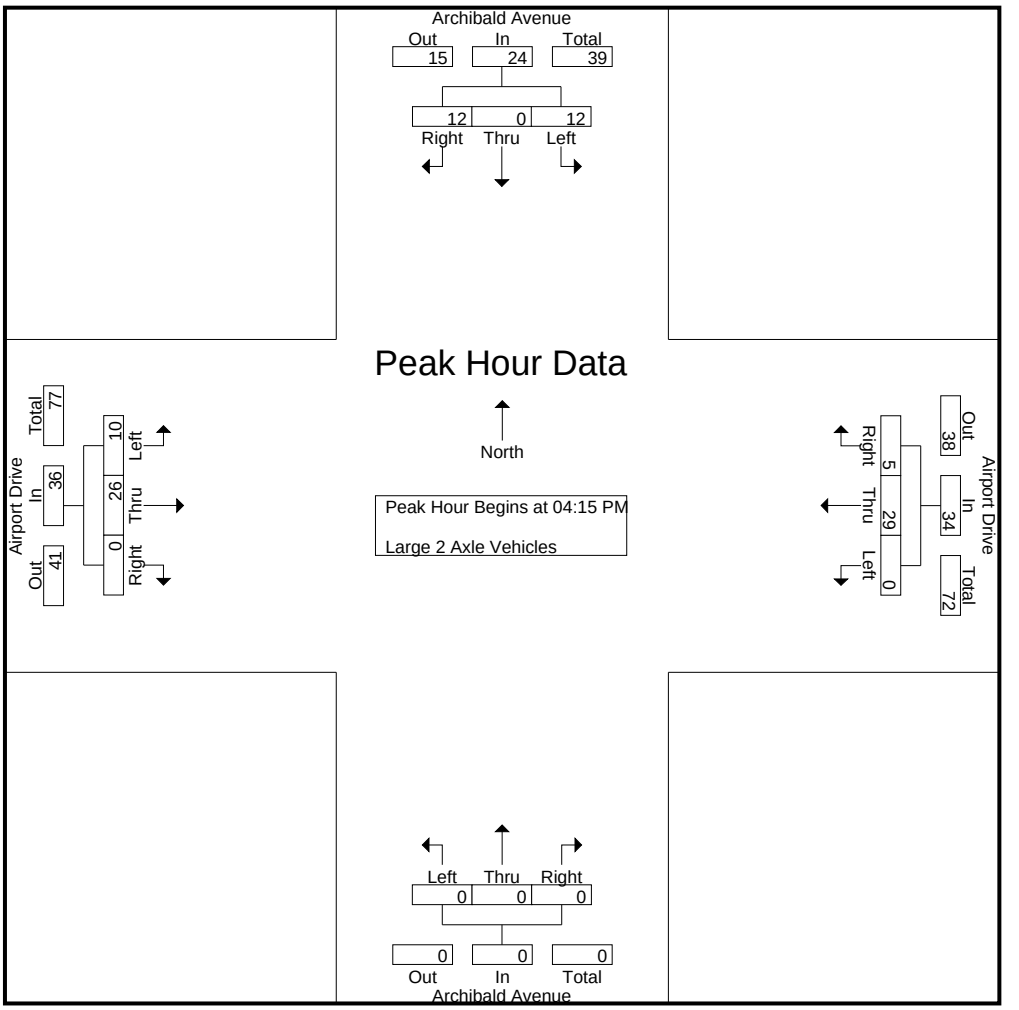

Peak Hour Analysis From 04:15 PM to 05:00 PM - Peak 1 of 1
Peak Hour for Each Approach Begins at:

	04:15 PM				04:15 PM				04:15 PM				04:15 PM			
+0 mins.	2	0	2	4	0	7	1	8	0	0	0	0	1	7	0	8
+15 mins.	3	0	**4**	7	0	6	1	7	0	0	0	0	3	**10**	0	**13**
+30 mins.	3	0	2	5	0	**8**	1	9	0	0	0	0	2	7	0	9
+45 mins.	**4**	0	4	**8**	0	8	**2**	**10**	0	0	0	0	**4**	2	0	6
Total Volume	12	0	12	24	0	29	5	34	0	0	0	0	10	26	0	36
% App. Total	50	0	50		0	85.3	14.7		0	0	0		27.8	72.2	0	
PHF	.750	.000	.750	.750	.000	.906	.625	.850	.000	.000	.000	.000	.625	.650	.000	.692

Counts Unlimited, Inc.
PO Box 1178
Corona, CA 92878
(951)268-6268

City of Ontario
N/S: Archibald Avenue
E/W: Airport Drive
Weather: Clear

File Name : 04_ONT_Arch_AP PM
Site Code : 00322818
Start Date : 9/20/2022
Page No : 1

Groups Printed- 3 Axle Vehicles

	Archibald Avenue Southbound				Airport Drive Westbound				Archibald Avenue Northbound				Airport Drive Eastbound				
Start Time	Left	Thru	Right	App. Total	Left	Thru	Right	App. Total	Left	Thru	Right	App. Total	Left	Thru	Right	App. Total	Int. Total
04:00 PM	0	0	2	2	0	0	0	0	0	0	0	0	2	2	0	4	6
04:15 PM	1	0	1	2	0	3	0	3	0	0	0	0	0	2	0	2	7
04:30 PM	3	0	0	3	0	0	0	0	0	0	0	0	0	3	0	3	6
04:45 PM	2	0	0	2	0	1	1	2	0	0	0	0	1	2	0	3	7
Total	6	0	3	9	0	4	1	5	0	0	0	0	3	9	0	12	26
05:00 PM	1	0	0	1	0	2	0	2	0	0	0	0	0	5	0	5	8
05:15 PM	1	0	0	1	0	0	1	1	0	0	0	0	0	2	0	2	4
05:30 PM	1	0	0	1	0	0	1	1	0	0	0	0	2	0	0	2	4
05:45 PM	1	0	0	1	0	1	0	1	0	0	0	0	0	1	0	1	3
Total	4	0	0	4	0	3	2	5	0	0	0	0	2	8	0	10	19
Grand Total	10	0	3	13	0	7	3	10	0	0	0	0	5	17	0	22	45
Apprch %	76.9	0	23.1		0	70	30		0	0	0		22.7	77.3	0		
Total %	22.2	0	6.7	28.9	0	15.6	6.7	22.2	0	0	0	0	11.1	37.8	0	48.9	

	Archibald Avenue Southbound				Airport Drive Westbound				Archibald Avenue Northbound				Airport Drive Eastbound				
Start Time	Left	Thru	Right	App. Total	Left	Thru	Right	App. Total	Left	Thru	Right	App. Total	Left	Thru	Right	App. Total	Int. Total
Peak Hour Analysis From 04:15 PM to 05:00 PM - Peak 1 of 1																	
Peak Hour for Entire Intersection Begins at 04:15 PM																	
04:15 PM	1	0	**1**	2	0	**3**	0	**3**	0	0	0	0	0	2	0	2	7
04:30 PM	**3**	0	0	**3**	0	0	0	0	0	0	0	0	0	3	0	3	6
04:45 PM	2	0	0	2	0	1	**1**	2	0	0	0	0	**1**	2	0	3	7
05:00 PM	1	0	0	1	0	2	0	2	0	0	0	0	0	**5**	0	**5**	**8**
Total Volume	7	0	1	8	0	6	1	7	0	0	0	0	1	12	0	13	28
% App. Total	87.5	0	12.5		0	85.7	14.3		0	0	0		7.7	92.3	0		
PHF	.583	.000	.250	.667	.000	.500	.250	.583	.000	.000	.000	.000	.250	.600	.000	.650	.875

Counts Unlimited, Inc.
PO Box 1178
Corona, CA 92878
(951)268-6268

City of Ontario
N/S: Archibald Avenue
E/W: Airport Drive
Weather: Clear

File Name : 04_ONT_Arch_AP PM
Site Code : 00322818
Start Date : 9/20/2022
Page No : 2

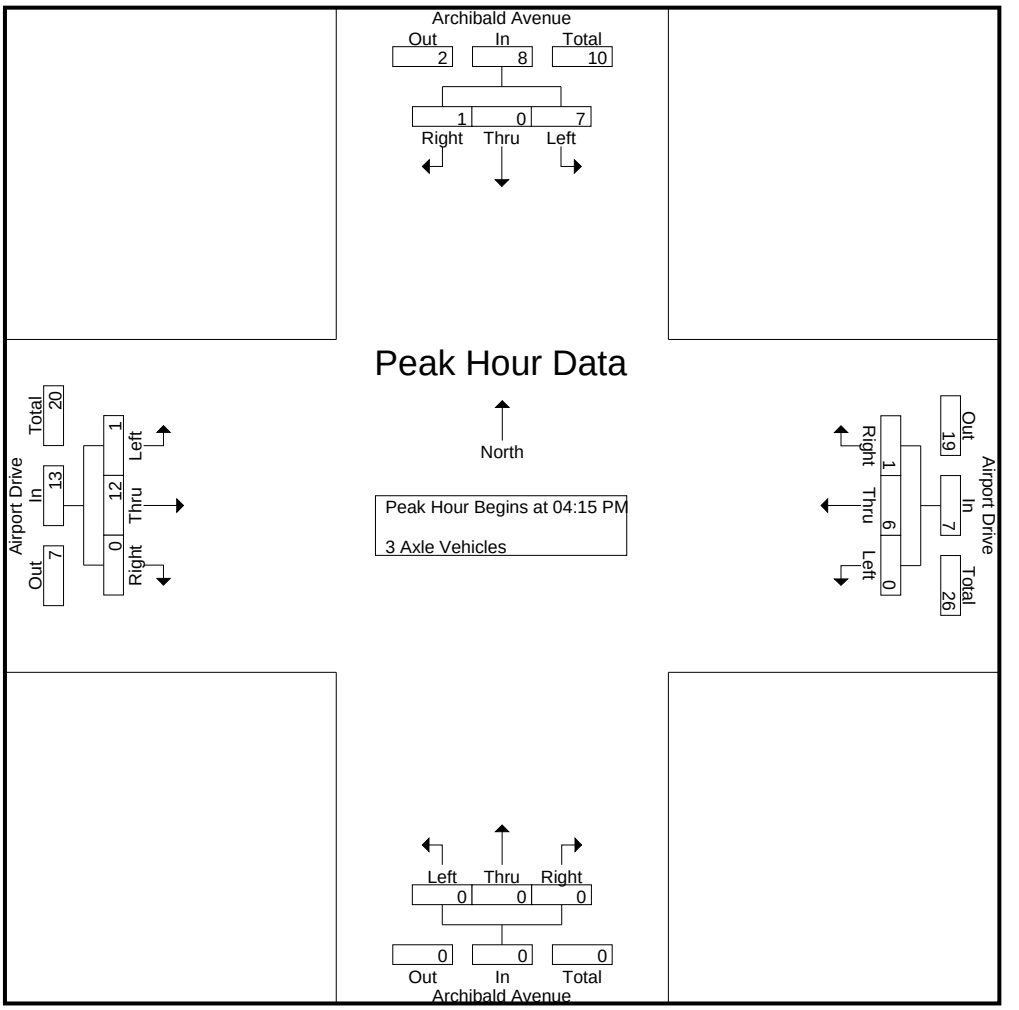

Peak Hour Analysis From 04:15 PM to 05:00 PM - Peak 1 of 1
Peak Hour for Each Approach Begins at:

	04:15 PM				04:15 PM				04:15 PM				04:15 PM			
+0 mins.	1	0	**1**	2	0	**3**	0	**3**	0	0	0	0	0	2	0	2
+15 mins.	**3**	0	0	**3**	0	0	0	0	0	0	0	0	0	3	0	3
+30 mins.	2	0	0	2	0	1	**1**	2	0	0	0	0	**1**	2	0	3
+45 mins.	1	0	0	1	0	2	0	2	0	0	0	0	0	**5**	0	**5**
Total Volume	7	0	1	8	0	6	1	7	0	0	0	0	1	12	0	13
% App. Total	87.5	0	12.5		0	85.7	14.3		0	0	0		7.7	92.3	0	
PHF	.583	.000	.250	.667	.000	.500	.250	.583	.000	.000	.000	.000	.250	.600	.000	.650

Counts Unlimited, Inc.
PO Box 1178
Corona, CA 92878
(951)268-6268

City of Ontario
N/S: Archibald Avenue
E/W: Airport Drive
Weather: Clear

File Name : 04_ONT_Arch_AP PM
Site Code : 00322818
Start Date : 9/20/2022
Page No : 1

Groups Printed- 4+ Axle Trucks

	Archibald Avenue Southbound				Airport Drive Westbound				Archibald Avenue Northbound				Airport Drive Eastbound				
Start Time	Left	Thru	Right	App. Total	Left	Thru	Right	App. Total	Left	Thru	Right	App. Total	Left	Thru	Right	App. Total	Int. Total
04:00 PM	2	0	0	2	0	1	1	2	0	0	0	0	2	4	0	6	10
04:15 PM	4	0	2	6	0	0	1	1	0	0	0	0	1	7	0	8	15
04:30 PM	3	0	2	5	0	1	0	1	0	0	0	0	5	7	0	12	18
04:45 PM	5	0	1	6	0	3	2	5	0	0	0	0	2	5	0	7	18
Total	14	0	5	19	0	5	4	9	0	0	0	0	10	23	0	33	61
05:00 PM	1	0	2	3	0	0	2	2	0	0	0	0	3	3	0	6	11
05:15 PM	1	0	2	3	0	0	1	1	0	0	0	0	1	0	0	1	5
05:30 PM	2	0	2	4	0	0	1	1	0	0	0	0	1	3	0	4	9
05:45 PM	4	0	3	7	0	0	0	0	0	0	0	0	4	1	0	5	12
Total	8	0	9	17	0	0	4	4	0	0	0	0	9	7	0	16	37
Grand Total	22	0	14	36	0	5	8	13	0	0	0	0	19	30	0	49	98
Apprch %	61.1	0	38.9		0	38.5	61.5		0	0	0		38.8	61.2	0		
Total %	22.4	0	14.3	36.7	0	5.1	8.2	13.3	0	0	0	0	19.4	30.6	0	50	

	Archibald Avenue Southbound				Airport Drive Westbound				Archibald Avenue Northbound				Airport Drive Eastbound				
Start Time	Left	Thru	Right	App. Total	Left	Thru	Right	App. Total	Left	Thru	Right	App. Total	Left	Thru	Right	App. Total	Int. Total
Peak Hour Analysis From 04:15 PM to 05:00 PM - Peak 1 of 1																	
Peak Hour for Entire Intersection Begins at 04:15 PM																	
04:15 PM	4	0	**2**	**6**	0	0	1	1	0	0	0	0	1	**7**	0	8	15
04:30 PM	3	0	2	5	0	1	0	1	0	0	0	0	**5**	7	0	**12**	**18**
04:45 PM	**5**	0	1	6	0	**3**	**2**	**5**	0	0	0	0	2	5	0	7	18
05:00 PM	1	0	2	3	0	0	2	2	0	0	0	0	3	3	0	6	11
Total Volume	13	0	7	20	0	4	5	9	0	0	0	0	11	22	0	33	62
% App. Total	65	0	35		0	44.4	55.6		0	0	0		33.3	66.7	0		
PHF	.650	.000	.875	.833	.000	.333	.625	.450	.000	.000	.000	.000	.550	.786	.000	.688	.861

Counts Unlimited, Inc.
PO Box 1178
Corona, CA 92878
(951)268-6268

City of Ontario
N/S: Archibald Avenue
E/W: Airport Drive
Weather: Clear

File Name : 04_ONT_Arch_AP PM
Site Code : 00322818
Start Date : 9/20/2022
Page No : 2

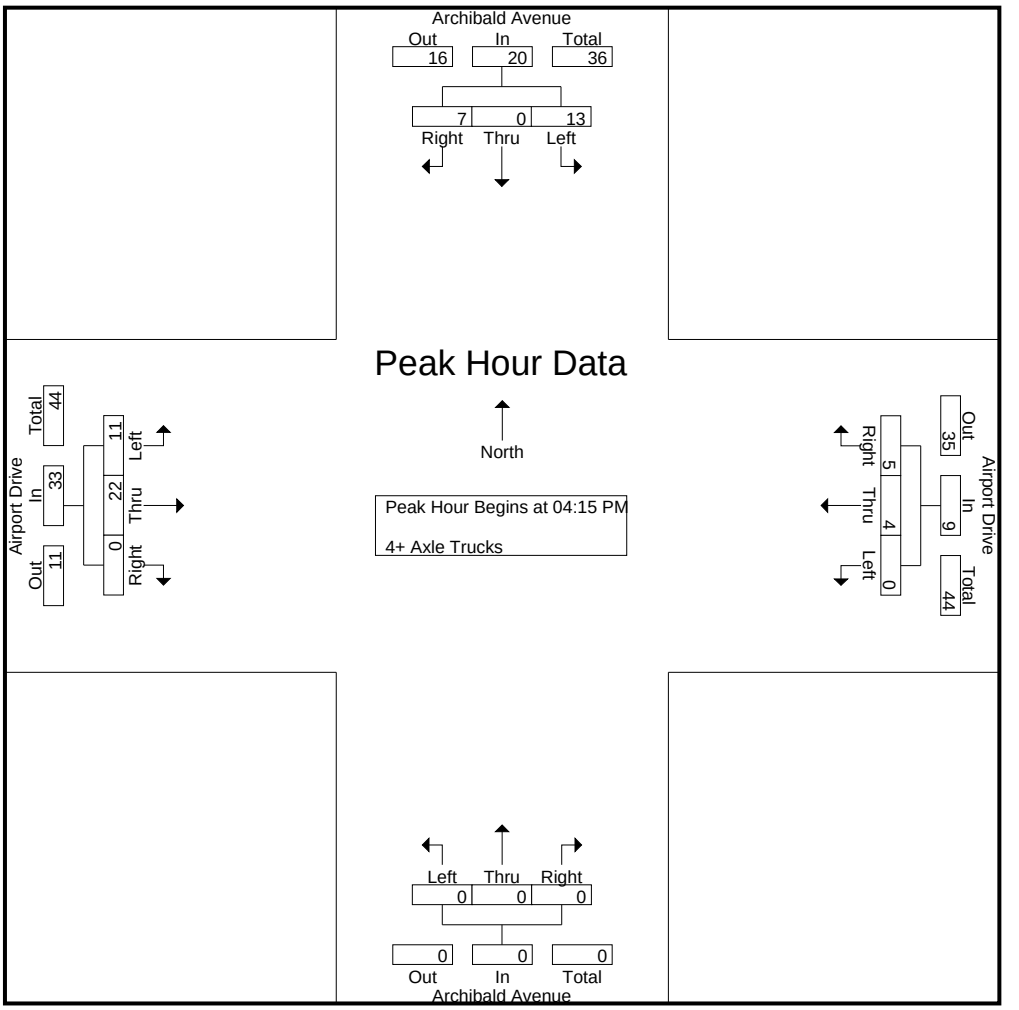

Peak Hour Analysis From 04:15 PM to 05:00 PM - Peak 1 of 1
Peak Hour for Each Approach Begins at:

	04:15 PM				04:15 PM				04:15 PM				04:15 PM			
+0 mins.	4	0	**2**	**6**	0	0	1	1	0	0	0	0	1	**7**	0	8
+15 mins.	3	0	2	5	0	1	0	1	0	0	0	0	**5**	7	0	**12**
+30 mins.	**5**	0	1	6	0	**3**	**2**	**5**	0	0	0	0	2	5	0	7
+45 mins.	1	0	2	3	0	0	2	2	0	0	0	0	3	3	0	6
Total Volume	13	0	7	20	0	4	5	9	0	0	0	0	11	22	0	33
% App. Total	65	0	35		0	44.4	55.6		0	0	0		33.3	66.7	0	
PHF	.650	.000	.875	.833	.000	.333	.625	.450	.000	.000	.000	.000	.550	.786	.000	.688

Location: Ontario
N/S: Archibald Avenue
E/W: Airport Drive

Date: 9/20/2022
Day: Tuesday

PEDESTRIANS

	North Leg Archibald Avenue	East Leg Airport Drive	South Leg Archibald Avenue	West Leg Airport Drive	
	Pedestrians	Pedestrians	Pedestrians	Pedestrians	
7:00 AM	0	0	0	0	0
7:15 AM	0	0	0	0	0
7:30 AM	0	0	0	0	0
7:45 AM	0	0	0	0	0
8:00 AM	0	0	0	0	0
8:15 AM	0	0	0	1	1
8:30 AM	0	0	0	0	0
8:45 AM	0	0	0	0	0
TOTAL VOLUMES:	0	0	0	1	1

	North Leg Archibald Avenue	East Leg Airport Drive	South Leg Archibald Avenue	West Leg Airport Drive	
	Pedestrians	Pedestrians	Pedestrians	Pedestrians	
4:00 PM	0	0	0	0	0
4:15 PM	0	0	0	0	0
4:30 PM	0	0	0	0	0
4:45 PM	0	0	0	0	0
5:00 PM	0	0	0	0	0
5:15 PM	0	0	0	0	0
5:30 PM	0	0	0	0	0
5:45 PM	0	0	0	0	0
TOTAL VOLUMES:	0	0	0	0	0

Counts Unlimited, Inc.
PO Box 1178
Corona, CA 92878
951-268-6268

Location: Ontario
N/S: Archibald Avenue
E/W: Airport Drive

Date: 9/20/2022
Day: Tuesday

BICYCLES

	Southbound Archibald Avenue			Westbound Airport Drive			Northbound Archibald Avenue			Eastbound Airport Drive			
	Left	Thru	Right	Left	Thru	Right	Left	Thru	Right	Left	Thru	Right	
7:00 AM	0	0	0	0	0	0	0	0	0	0	0	0	0
7:15 AM	0	0	0	0	0	0	0	0	0	0	0	0	0
7:30 AM	0	0	0	0	0	0	0	0	0	0	0	0	0
7:45 AM	0	0	0	0	0	0	0	0	0	0	0	0	0
8:00 AM	0	0	0	0	0	0	0	0	0	0	0	0	0
8:15 AM	0	0	0	0	0	0	0	0	0	0	0	0	0
8:30 AM	0	0	0	0	0	0	0	0	0	0	0	0	0
8:45 AM	0	0	0	0	0	0	0	0	0	0	0	0	0
TOTAL VOLUMES:	0	0	0	0	0	0	0	0	0	0	0	0	0

	Southbound Archibald Avenue			Westbound Airport Drive			Northbound Archibald Avenue			Eastbound Airport Drive			
	Left	Thru	Right	Left	Thru	Right	Left	Thru	Right	Left	Thru	Right	
4:00 PM	0	0	0	0	0	0	0	0	0	0	0	0	0
4:15 PM	0	0	0	0	0	0	0	0	0	0	0	0	0
4:30 PM	0	0	0	0	0	0	0	0	0	0	0	0	0
4:45 PM	0	0	0	0	0	0	0	0	0	0	0	0	0
5:00 PM	0	0	0	0	0	0	0	0	0	0	0	0	0
5:15 PM	0	0	0	0	0	0	0	0	0	0	0	0	0
5:30 PM	0	0	0	0	0	0	0	0	0	0	0	0	0
5:45 PM	0	0	0	0	0	0	0	0	0	0	0	0	0
TOTAL VOLUMES:	0	0	0	0	0	0	0	0	0	0	0	0	0

Counts Unlimited, Inc.
PO Box 1178
Corona, CA 92878
951-268-6268

Counts Unlimited, Inc.
PO Box 1178
Corona, CA 92878
(951)268-6268

City of Ontario
N/S: Terminal Way East
E/W: Airport Drive
Weather: Clear

File Name : 05_ONT_Term E_AP AM
Site Code : 00322818
Start Date : 9/20/2022
Page No : 1

Groups Printed- Passenger Vehicles - Large 2 Axle Vehicles - 3 Axle Vehicles - 4+ Axle Trucks

	Airport Drive Westbound			Terminal Way East Northbound			Airport Drive Eastbound			
Start Time	Left	Thru	App. Total	Left	Right	App. Total	Thru	Right	App. Total	Int. Total
07:00 AM	24	103	127	21	31	52	122	1	123	302
07:15 AM	16	117	133	19	30	49	110	2	112	294
07:30 AM	23	130	153	18	19	37	140	3	143	333
07:45 AM	11	176	187	13	25	38	177	0	177	402
Total	74	526	600	71	105	176	549	6	555	1331
08:00 AM	17	156	173	20	23	43	135	2	137	353
08:15 AM	22	167	189	20	27	47	120	4	124	360
08:30 AM	19	137	156	22	36	58	92	1	93	307
08:45 AM	26	130	156	21	43	64	88	3	91	311
Total	84	590	674	83	129	212	435	10	445	1331
Grand Total	158	1116	1274	154	234	388	984	16	1000	2662
Apprch %	12.4	87.6		39.7	60.3		98.4	1.6		
Total %	5.9	41.9	47.9	5.8	8.8	14.6	37	0.6	37.6	
Passenger Vehicles	157	1032	1189	139	228	367	934	16	950	2506
% Passenger Vehicles	99.4	92.5	93.3	90.3	97.4	94.6	94.9	100	95	94.1
Large 2 Axle Vehicles	0	49	49	13	5	18	31	0	31	98
% Large 2 Axle Vehicles	0	4.4	3.8	8.4	2.1	4.6	3.2	0	3.1	3.7
3 Axle Vehicles	0	9	9	2	0	2	7	0	7	18
% 3 Axle Vehicles	0	0.8	0.7	1.3	0	0.5	0.7	0	0.7	0.7
4+ Axle Trucks	1	26	27	0	1	1	12	0	12	40
% 4+ Axle Trucks	0.6	2.3	2.1	0	0.4	0.3	1.2	0	1.2	1.5

	Airport Drive Westbound			Terminal Way East Northbound			Airport Drive Eastbound			
Start Time	Left	Thru	App. Total	Left	Right	App. Total	Thru	Right	App. Total	Int. Total
Peak Hour Analysis From 07:00 AM to 08:45 AM - Peak 1 of 1										
Peak Hour for Entire Intersection Begins at 07:30 AM										
07:30 AM	**23**	130	153	18	19	37	140	3	143	333
07:45 AM	11	**176**	187	13	25	38	**177**	0	**177**	**402**
08:00 AM	17	156	173	**20**	23	43	135	2	137	353
08:15 AM	22	167	**189**	20	**27**	**47**	120	**4**	124	360
Total Volume	73	629	702	71	94	165	572	9	581	1448
% App. Total	10.4	89.6		43	57		98.5	1.5		
PHF	.793	.893	.929	.888	.870	.878	.808	.563	.821	.900

Counts Unlimited, Inc.
PO Box 1178
Corona, CA 92878
(951)268-6268

City of Ontario
N/S: Terminal Way East
E/W: Airport Drive
Weather: Clear

File Name : 05_ONT_Term E_AP AM
Site Code : 00322818
Start Date : 9/20/2022
Page No : 2

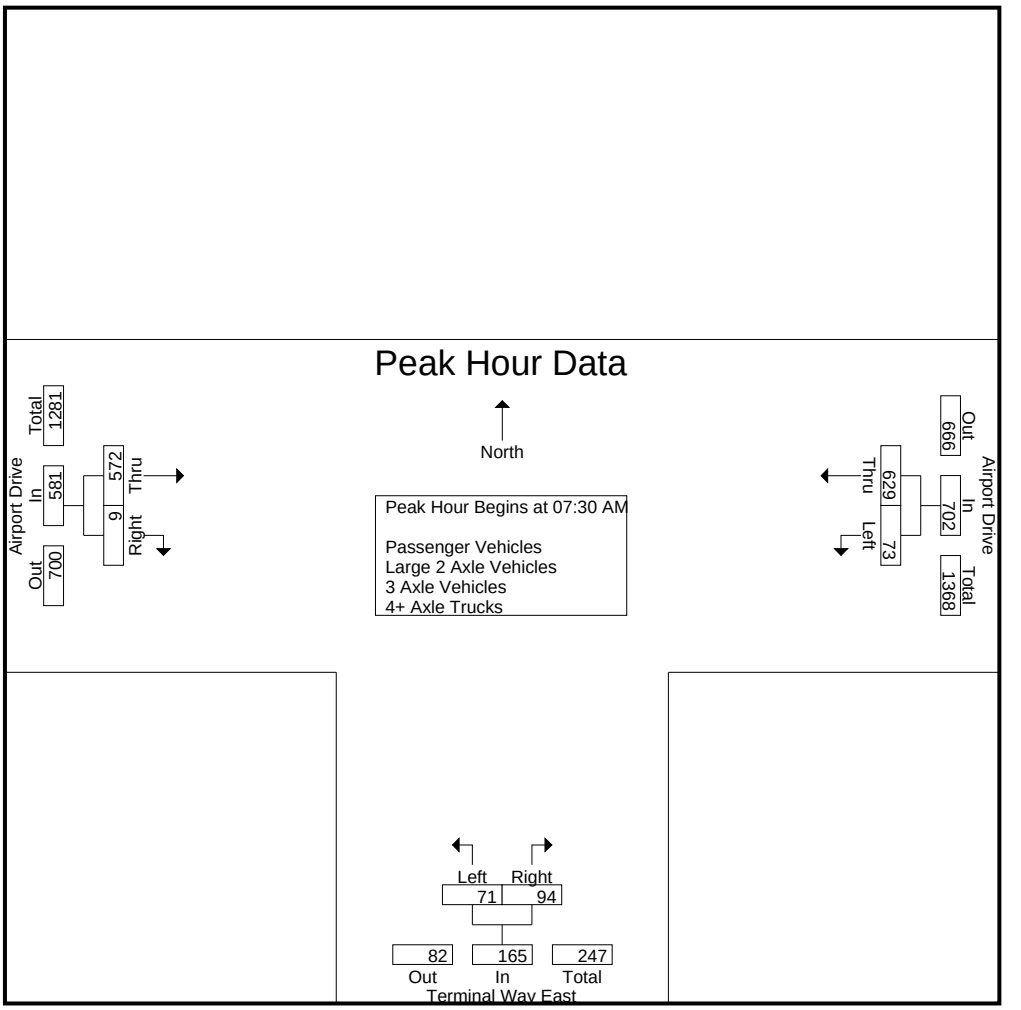

Peak Hour Analysis From 07:00 AM to 08:45 AM - Peak 1 of 1
Peak Hour for Each Approach Begins at:

	07:45 AM			08:00 AM			07:30 AM		
+0 mins.	11	**176**	187	20	23	43	140	3	143
+15 mins.	17	156	173	20	27	47	**177**	0	**177**
+30 mins.	**22**	167	**189**	**22**	36	58	135	2	137
+45 mins.	19	137	156	21	**43**	**64**	120	**4**	124
Total Volume	69	636	705	83	129	212	572	9	581
% App. Total	9.8	90.2		39.2	60.8		98.5	1.5	
PHF	.784	.903	.933	.943	.750	.828	.808	.563	.821

Counts Unlimited, Inc.
PO Box 1178
Corona, CA 92878
(951)268-6268

City of Ontario
N/S: Terminal Way East
E/W: Airport Drive
Weather: Clear

File Name : 05_ONT_Term E_AP AM
Site Code : 00322818
Start Date : 9/20/2022
Page No : 1

Groups Printed- Passenger Vehicles

	Airport Drive Westbound			Terminal Way East Northbound			Airport Drive Eastbound			
Start Time	Left	Thru	App. Total	Left	Right	App. Total	Thru	Right	App. Total	Int. Total
07:00 AM	23	98	121	18	31	49	111	1	112	282
07:15 AM	16	108	124	17	28	45	105	2	107	276
07:30 AM	23	119	142	17	19	36	136	3	139	317
07:45 AM	11	164	175	12	24	36	172	0	172	383
Total	73	489	562	64	102	166	524	6	530	1258
08:00 AM	17	143	160	17	21	38	125	2	127	325
08:15 AM	22	153	175	19	27	46	117	4	121	342
08:30 AM	19	129	148	21	35	56	86	1	87	291
08:45 AM	26	118	144	18	43	61	82	3	85	290
Total	84	543	627	75	126	201	410	10	420	1248
Grand Total	157	1032	1189	139	228	367	934	16	950	2506
Apprch %	13.2	86.8		37.9	62.1		98.3	1.7		
Total %	6.3	41.2	47.4	5.5	9.1	14.6	37.3	0.6	37.9	

	Airport Drive Westbound			Terminal Way East Northbound			Airport Drive Eastbound			
Start Time	Left	Thru	App. Total	Left	Right	App. Total	Thru	Right	App. Total	Int. Total
Peak Hour Analysis From 07:30 AM to 08:15 AM - Peak 1 of 1										
Peak Hour for Entire Intersection Begins at 07:30 AM										
07:30 AM	**23**	119	142	17	19	36	136	3	139	317
07:45 AM	11	**164**	**175**	12	24	36	**172**	0	**172**	**383**
08:00 AM	17	143	160	17	21	38	125	2	127	325
08:15 AM	22	153	175	**19**	**27**	**46**	117	**4**	121	342
Total Volume	73	579	652	65	91	156	550	9	559	1367
% App. Total	11.2	88.8		41.7	58.3		98.4	1.6		
PHF	.793	.883	.931	.855	.843	.848	.799	.563	.813	.892

Counts Unlimited, Inc.
PO Box 1178
Corona, CA 92878
(951)268-6268

City of Ontario
N/S: Terminal Way East
E/W: Airport Drive
Weather: Clear

File Name : 05_ONT_Term E_AP AM
Site Code : 00322818
Start Date : 9/20/2022
Page No : 2

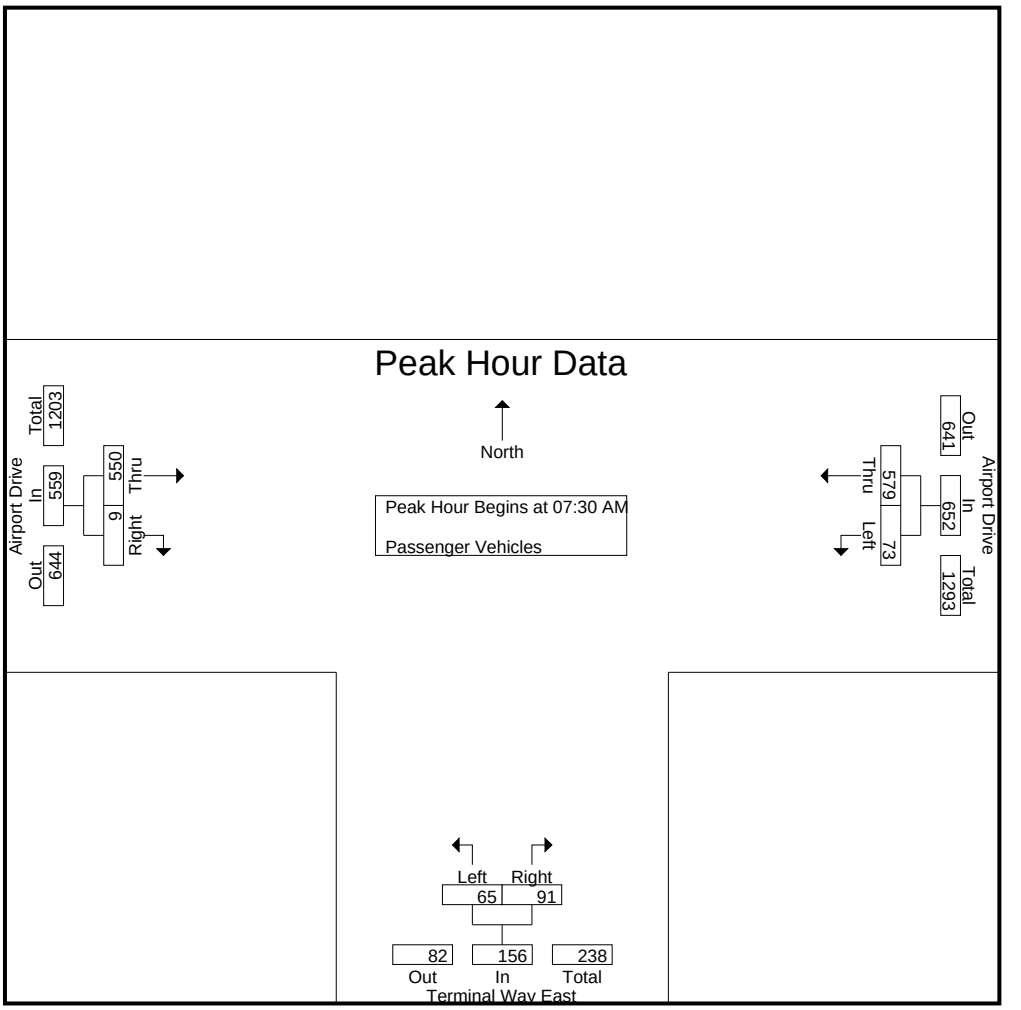

Peak Hour Analysis From 07:30 AM to 08:15 AM - Peak 1 of 1
Peak Hour for Each Approach Begins at:

	07:30 AM			07:30 AM			07:30 AM		
+0 mins.	**23**	119	142	17	19	36	136	3	139
+15 mins.	11	**164**	**175**	12	24	36	**172**	0	**172**
+30 mins.	17	143	160	17	21	38	125	2	127
+45 mins.	22	153	175	**19**	**27**	**46**	117	**4**	121
Total Volume	73	579	652	65	91	156	550	9	559
% App. Total	11.2	88.8		41.7	58.3		98.4	1.6	
PHF	.793	.883	.931	.855	.843	.848	.799	.563	.813

Counts Unlimited, Inc.
PO Box 1178
Corona, CA 92878
(951)268-6268

City of Ontario
N/S: Terminal Way East
E/W: Airport Drive
Weather: Clear

File Name : 05_ONT_Term E_AP AM
Site Code : 00322818
Start Date : 9/20/2022
Page No : 1

Groups Printed- Large 2 Axle Vehicles

	Airport Drive Westbound			Terminal Way East Northbound			Airport Drive Eastbound			
Start Time	Left	Thru	App. Total	Left	Right	App. Total	Thru	Right	App. Total	Int. Total
07:00 AM	0	3	3	2	0	2	9	0	9	14
07:15 AM	0	7	7	2	2	4	3	0	3	14
07:30 AM	0	8	8	1	0	1	3	0	3	12
07:45 AM	0	6	6	1	0	1	4	0	4	11
Total	0	24	24	6	2	8	19	0	19	51
08:00 AM	0	6	6	3	2	5	7	0	7	18
08:15 AM	0	9	9	1	0	1	2	0	2	12
08:30 AM	0	4	4	1	1	2	2	0	2	8
08:45 AM	0	6	6	2	0	2	1	0	1	9
Total	0	25	25	7	3	10	12	0	12	47
Grand Total	0	49	49	13	5	18	31	0	31	98
Apprch %	0	100		72.2	27.8		100	0		
Total %	0	50	50	13.3	5.1	18.4	31.6	0	31.6	

	Airport Drive Westbound			Terminal Way East Northbound			Airport Drive Eastbound			
Start Time	Left	Thru	App. Total	Left	Right	App. Total	Thru	Right	App. Total	Int. Total
Peak Hour Analysis From 07:30 AM to 08:15 AM - Peak 1 of 1										
Peak Hour for Entire Intersection Begins at 07:30 AM										
07:30 AM	0	8	8	1	0	1	3	0	3	12
07:45 AM	0	6	6	1	0	1	4	0	4	11
08:00 AM	0	6	6	**3**	**2**	**5**	**7**	0	**7**	**18**
08:15 AM	0	**9**	**9**	1	0	1	2	0	2	12
Total Volume	0	29	29	6	2	8	16	0	16	53
% App. Total	0	100		75	25		100	0		
PHF	.000	.806	.806	.500	.250	.400	.571	.000	.571	.736

Counts Unlimited, Inc.
PO Box 1178
Corona, CA 92878
(951)268-6268

City of Ontario
N/S: Terminal Way East
E/W: Airport Drive
Weather: Clear

File Name : 05_ONT_Term E_AP AM
Site Code : 00322818
Start Date : 9/20/2022
Page No : 2

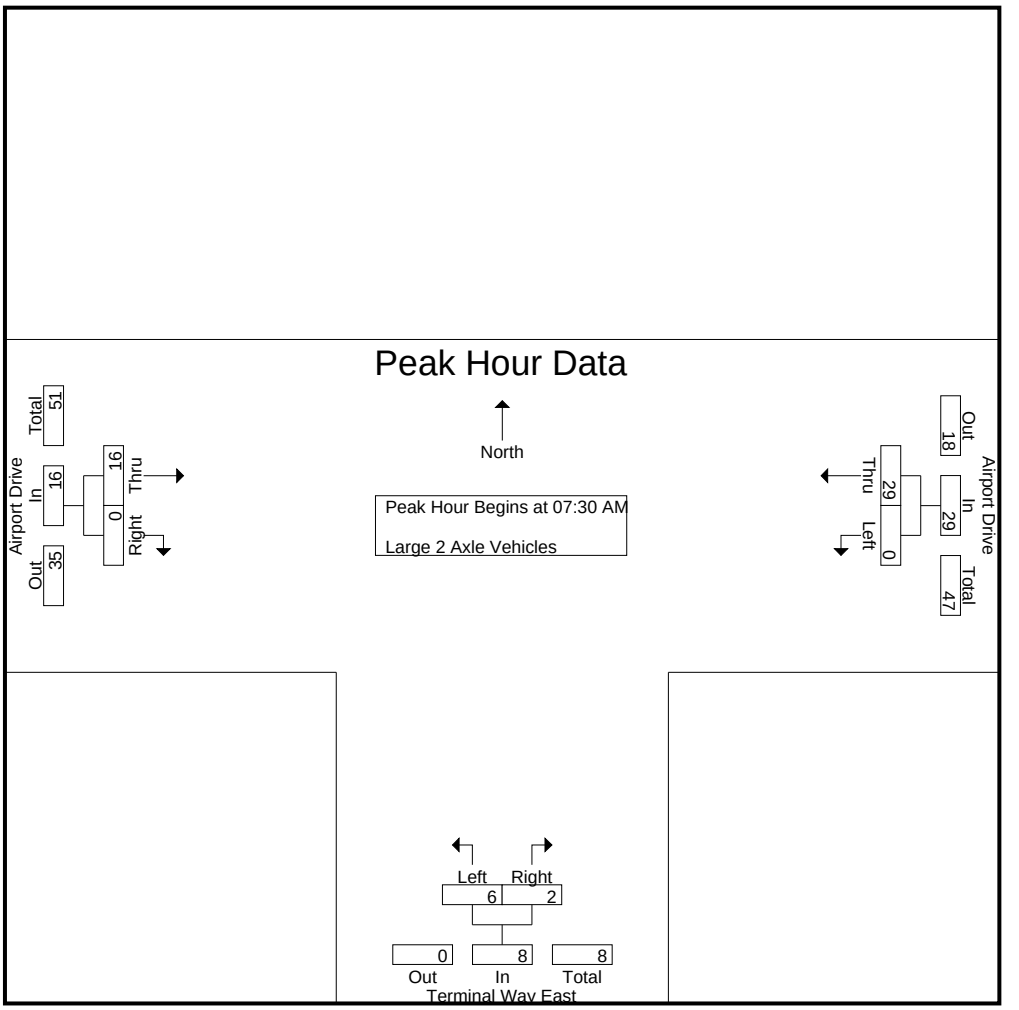

Peak Hour Analysis From 07:30 AM to 08:15 AM - Peak 1 of 1
Peak Hour for Each Approach Begins at:

	07:30 AM			07:30 AM			07:30 AM		
+0 mins.	0	8	8	1	0	1	3	0	3
+15 mins.	0	6	6	1	0	1	4	0	4
+30 mins.	0	6	6	**3**	**2**	**5**	**7**	0	**7**
+45 mins.	0	**9**	**9**	1	0	1	2	0	2
Total Volume	0	29	29	6	2	8	16	0	16
% App. Total	0	100		75	25		100	0	
PHF	.000	.806	.806	.500	.250	.400	.571	.000	.571

Counts Unlimited, Inc.
PO Box 1178
Corona, CA 92878
(951)268-6268

City of Ontario
N/S: Terminal Way East
E/W: Airport Drive
Weather: Clear

File Name : 05_ONT_Term E_AP AM
Site Code : 00322818
Start Date : 9/20/2022

Groups Printed- 3 Axle Vehicles

	Airport Drive Westbound			Terminal Way East Northbound			Airport Drive Eastbound			
Start Time	Left	Thru	App. Total	Left	Right	App. Total	Thru	Right	App. Total	Int. Total
07:00 AM	0	1	1	1	0	1	0	0	0	2
07:15 AM	0	1	1	0	0	0	1	0	1	2
07:30 AM	0	1	1	0	0	0	1	0	1	2
07:45 AM	0	0	0	0	0	0	1	0	1	1
Total	0	3	3	1	0	1	3	0	3	7
08:00 AM	0	1	1	0	0	0	1	0	1	2
08:15 AM	0	1	1	0	0	0	0	0	0	1
08:30 AM	0	2	2	0	0	0	1	0	1	3
08:45 AM	0	2	2	1	0	1	2	0	2	5
Total	0	6	6	1	0	1	4	0	4	11
Grand Total	0	9	9	2	0	2	7	0	7	18
Apprch %	0	100		100	0		100	0		
Total %	0	50	50	11.1	0	11.1	38.9	0	38.9	

	Airport Drive Westbound			Terminal Way East Northbound			Airport Drive Eastbound			
Start Time	Left	Thru	App. Total	Left	Right	App. Total	Thru	Right	App. Total	Int. Total
Peak Hour Analysis From 07:30 AM to 08:15 AM - Peak 1 of 1										
Peak Hour for Entire Intersection Begins at 07:30 AM										
07:30 AM	0	**1**	**1**	0	0	0	**1**	0	**1**	**2**
07:45 AM	0	0	0	0	0	0	1	0	1	1
08:00 AM	0	1	1	0	0	0	1	0	1	2
08:15 AM	0	1	1	0	0	0	0	0	0	1
Total Volume	0	3	3	0	0	0	3	0	3	6
% App. Total	0	100		0	0		100	0		
PHF	.000	.750	.750	.000	.000	.000	.750	.000	.750	.750

Counts Unlimited, Inc.
PO Box 1178
Corona, CA 92878
(951)268-6268

City of Ontario
N/S: Terminal Way East
E/W: Airport Drive
Weather: Clear

File Name : 05_ONT_Term E_AP AM
Site Code : 00322818
Start Date : 9/20/2022
Page No : 2

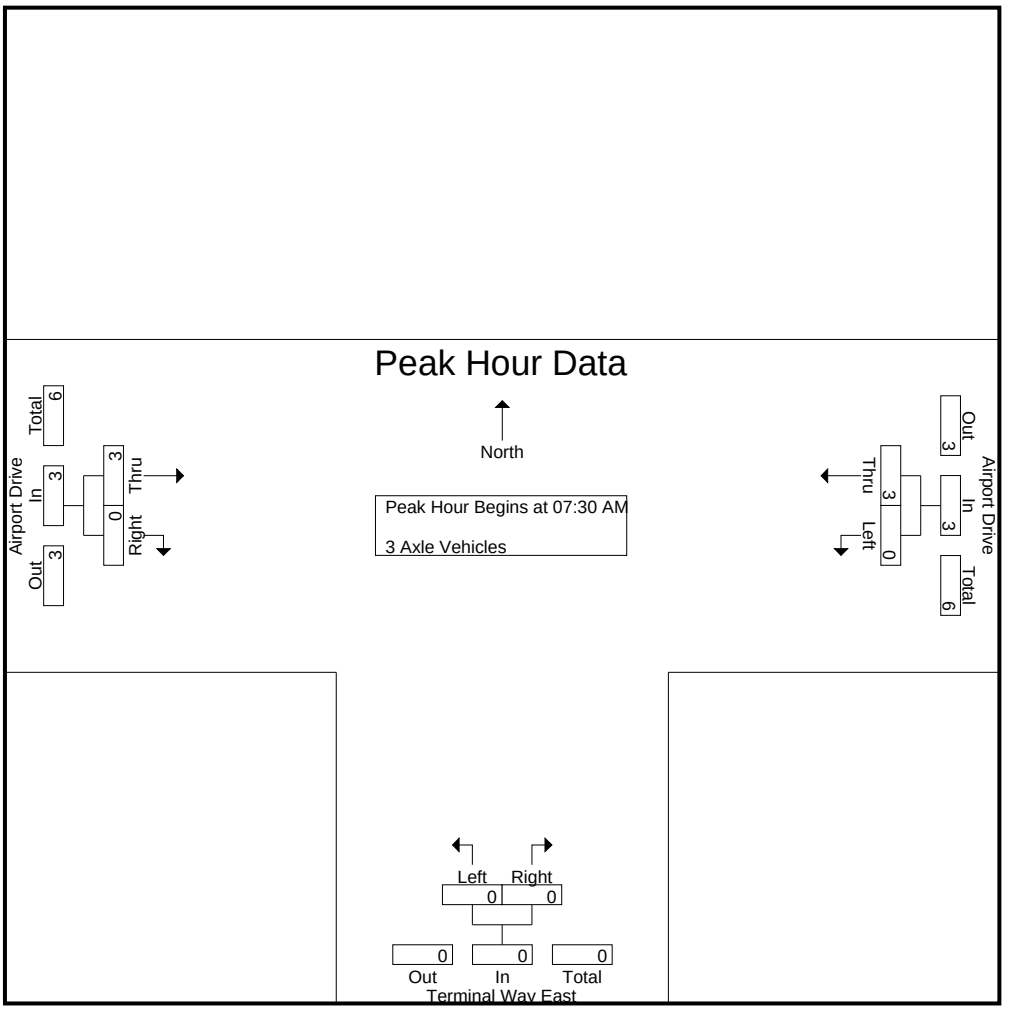

Peak Hour Analysis From 07:30 AM to 08:15 AM - Peak 1 of 1
Peak Hour for Each Approach Begins at:

	07:30 AM			07:30 AM			07:30 AM		
+0 mins.	0	**1**	**1**	0	0	0	**1**	0	**1**
+15 mins.	0	0	0	0	0	0	1	0	1
+30 mins.	0	1	1	0	0	0	1	0	1
+45 mins.	0	1	1	0	0	0	0	0	0
Total Volume	0	3	3	0	0	0	3	0	3
% App. Total	0	100		0	0		100	0	
PHF	.000	.750	.750	.000	.000	.000	.750	.000	.750

Counts Unlimited, Inc.
PO Box 1178
Corona, CA 92878
(951)268-6268

City of Ontario
N/S: Terminal Way East
E/W: Airport Drive
Weather: Clear

File Name : 05_ONT_Term E_AP AM
Site Code : 00322818
Start Date : 9/20/2022

Groups Printed- 4+ Axle Trucks

	Airport Drive Westbound			Terminal Way East Northbound			Airport Drive Eastbound			
Start Time	Left	Thru	App. Total	Left	Right	App. Total	Thru	Right	App. Total	Int. Total
07:00 AM	1	1	2	0	0	0	2	0	2	4
07:15 AM	0	1	1	0	0	0	1	0	1	2
07:30 AM	0	2	2	0	0	0	0	0	0	2
07:45 AM	0	6	6	0	1	1	0	0	0	7
Total	1	10	11	0	1	1	3	0	3	15
08:00 AM	0	6	6	0	0	0	2	0	2	8
08:15 AM	0	4	4	0	0	0	1	0	1	5
08:30 AM	0	2	2	0	0	0	3	0	3	5
08:45 AM	0	4	4	0	0	0	3	0	3	7
Total	0	16	16	0	0	0	9	0	9	25
Grand Total	1	26	27	0	1	1	12	0	12	40
Apprch %	3.7	96.3		0	100		100	0		
Total %	2.5	65	67.5	0	2.5	2.5	30	0	30	

	Airport Drive Westbound			Terminal Way East Northbound			Airport Drive Eastbound			
Start Time	Left	Thru	App. Total	Left	Right	App. Total	Thru	Right	App. Total	Int. Total
Peak Hour Analysis From 07:30 AM to 08:15 AM - Peak 1 of 1										
Peak Hour for Entire Intersection Begins at 07:30 AM										
07:30 AM	0	2	2	0	0	0	0	0	0	2
07:45 AM	0	**6**	**6**	0	**1**	**1**	0	0	0	7
08:00 AM	0	6	6	0	0	0	**2**	0	**2**	**8**
08:15 AM	0	4	4	0	0	0	1	0	1	5
Total Volume	0	18	18	0	1	1	3	0	3	22
% App. Total	0	100		0	100		100	0		
PHF	.000	.750	.750	.000	.250	.250	.375	.000	.375	.688

Counts Unlimited, Inc.
PO Box 1178
Corona, CA 92878
(951)268-6268

City of Ontario
N/S: Terminal Way East
E/W: Airport Drive
Weather: Clear

File Name : 05_ONT_Term E_AP AM
Site Code : 00322818
Start Date : 9/20/2022
Page No : 2

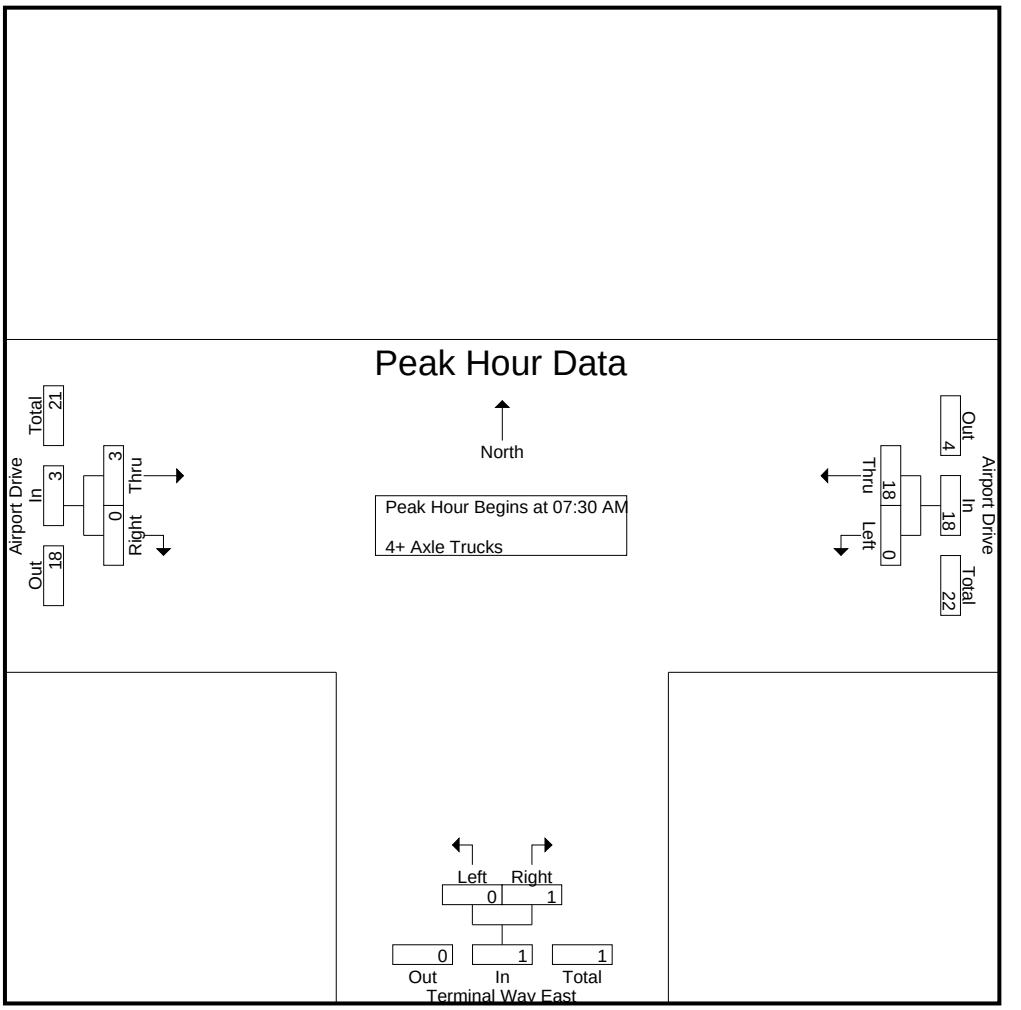

Peak Hour Analysis From 07:30 AM to 08:15 AM - Peak 1 of 1
Peak Hour for Each Approach Begins at:

	07:30 AM			07:30 AM			07:30 AM		
+0 mins.	0	2	2	0	0	0	0	0	0
+15 mins.	0	**6**	**6**	0	**1**	**1**	0	0	0
+30 mins.	0	6	6	0	0	0	**2**	0	**2**
+45 mins.	0	4	4	0	0	0	1	0	1
Total Volume	0	18	18	0	1	1	3	0	3
% App. Total	0	100		0	100		100	0	
PHF	.000	.750	.750	.000	.250	.250	.375	.000	.375

Counts Unlimited, Inc.
PO Box 1178
Corona, CA 92878
(951)268-6268

City of Ontario
N/S: Terminal Way East
E/W: Airport Drive
Weather: Clear

File Name : 05_ONT_Term E_AP PM
Site Code : 00322818
Start Date : 9/20/2022
Page No : 1

Groups Printed- Passenger Vehicles - Large 2 Axle Vehicles - 3 Axle Vehicles - 4+ Axle Trucks

	Airport Drive Westbound			Terminal Way East Northbound			Airport Drive Eastbound			
Start Time	Left	Thru	App. Total	Left	Right	App. Total	Thru	Right	App. Total	Int. Total
04:00 PM	21	218	239	14	16	30	238	2	240	509
04:15 PM	26	202	228	24	55	79	264	2	266	573
04:30 PM	16	197	213	48	89	137	291	2	293	643
04:45 PM	9	222	231	21	42	63	258	2	260	554
Total	72	839	911	107	202	309	1051	8	1059	2279
05:00 PM	13	200	213	24	33	57	278	1	279	549
05:15 PM	8	191	199	19	32	51	239	3	242	492
05:30 PM	14	151	165	19	36	55	248	5	253	473
05:45 PM	17	106	123	19	56	75	200	5	205	403
Total	52	648	700	81	157	238	965	14	979	1917
Grand Total	124	1487	1611	188	359	547	2016	22	2038	4196
Apprch %	7.7	92.3		34.4	65.6		98.9	1.1		
Total %	3	35.4	38.4	4.5	8.6	13	48	0.5	48.6	
Passenger Vehicles	123	1412	1535	174	357	531	1865	22	1887	3953
% Passenger Vehicles	99.2	95	95.3	92.6	99.4	97.1	92.5	100	92.6	94.2
Large 2 Axle Vehicles	0	52	52	14	1	15	72	0	72	139
% Large 2 Axle Vehicles	0	3.5	3.2	7.4	0.3	2.7	3.6	0	3.5	3.3
3 Axle Vehicles	1	9	10	0	1	1	23	0	23	34
% 3 Axle Vehicles	0.8	0.6	0.6	0	0.3	0.2	1.1	0	1.1	0.8
4+ Axle Trucks	0	14	14	0	0	0	56	0	56	70
% 4+ Axle Trucks	0	0.9	0.9	0	0	0	2.8	0	2.7	1.7

	Airport Drive Westbound			Terminal Way East Northbound			Airport Drive Eastbound			
Start Time	Left	Thru	App. Total	Left	Right	App. Total	Thru	Right	App. Total	Int. Total
Peak Hour Analysis From 04:00 PM to 05:45 PM - Peak 1 of 1										
Peak Hour for Entire Intersection Begins at 04:15 PM										
04:15 PM	**26**	202	228	24	55	79	264	**2**	266	573
04:30 PM	16	197	213	**48**	**89**	**137**	**291**	2	**293**	**643**
04:45 PM	9	**222**	**231**	21	42	63	258	2	260	554
05:00 PM	13	200	213	24	33	57	278	1	279	549
Total Volume	64	821	885	117	219	336	1091	7	1098	2319
% App. Total	7.2	92.8		34.8	65.2		99.4	0.6		
PHF	.615	.925	.958	.609	.615	.613	.937	.875	.937	.902

Counts Unlimited, Inc.
PO Box 1178
Corona, CA 92878
(951)268-6268

City of Ontario
N/S: Terminal Way East
E/W: Airport Drive
Weather: Clear

File Name : 05_ONT_Term E_AP PM
Site Code : 00322818
Start Date : 9/20/2022

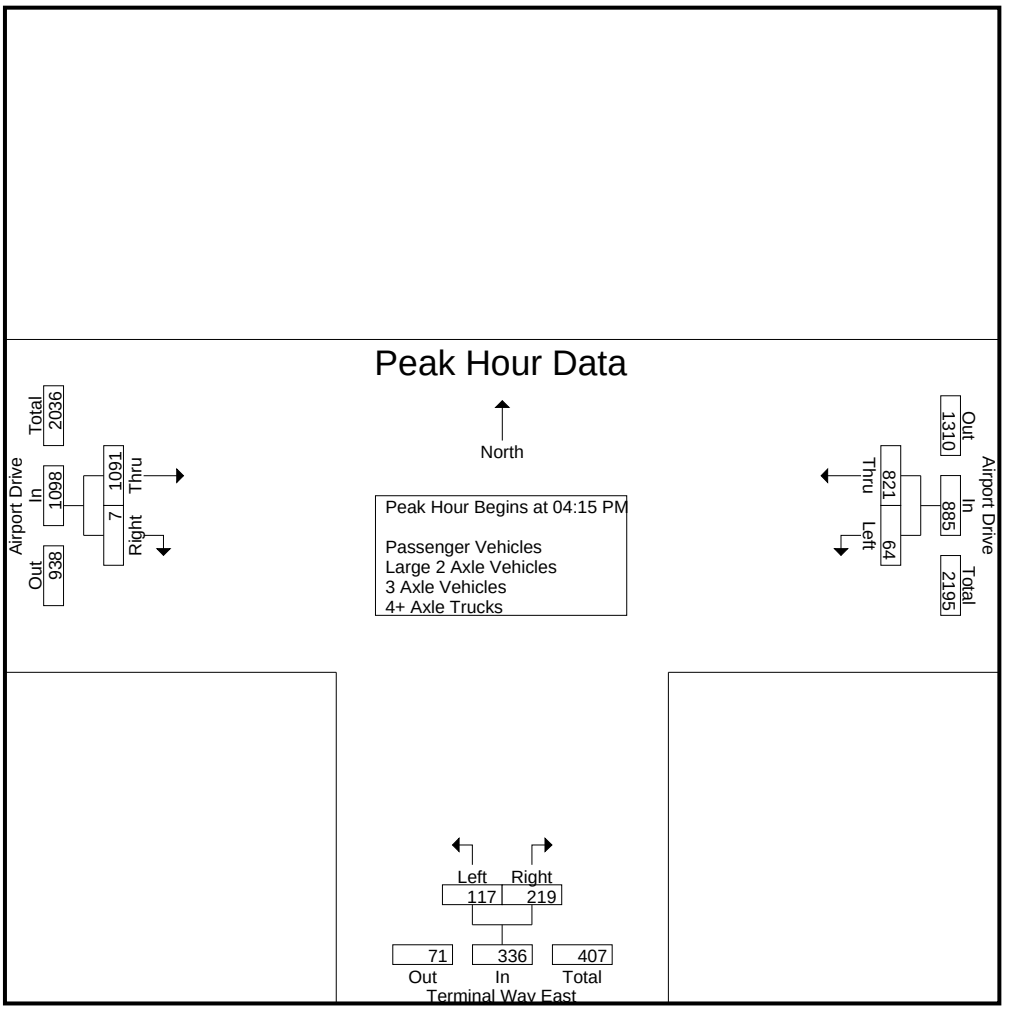

Peak Hour Analysis From 04:00 PM to 05:45 PM - Peak 1 of 1
Peak Hour for Each Approach Begins at:

	04:00 PM			04:15 PM			04:15 PM		
+0 mins.	21	218	**239**	24	55	79	264	**2**	266
+15 mins.	**26**	202	228	**48**	**89**	**137**	**291**	2	**293**
+30 mins.	16	197	213	21	42	63	258	2	260
+45 mins.	9	**222**	231	24	33	57	278	1	279
Total Volume	72	839	911	117	219	336	1091	7	1098
% App. Total	7.9	92.1		34.8	65.2		99.4	0.6	
PHF	.692	.945	.953	.609	.615	.613	.937	.875	.937

Counts Unlimited, Inc.
PO Box 1178
Corona, CA 92878
(951)268-6268

City of Ontario
N/S: Terminal Way East
E/W: Airport Drive
Weather: Clear

File Name : 05_ONT_Term E_AP PM
Site Code : 00322818
Start Date : 9/20/2022
Page No : 1

Groups Printed- Passenger Vehicles

	Airport Drive Westbound			Terminal Way East Northbound			Airport Drive Eastbound			
Start Time	Left	Thru	App. Total	Left	Right	App. Total	Thru	Right	App. Total	Int. Total
04:00 PM	21	210	231	13	15	28	224	2	226	485
04:15 PM	26	193	219	22	55	77	239	2	241	537
04:30 PM	16	189	205	46	89	135	265	2	267	607
04:45 PM	9	207	216	20	42	62	231	2	233	511
Total	72	799	871	101	201	302	959	8	967	2140
05:00 PM	12	190	202	21	33	54	262	1	263	519
05:15 PM	8	182	190	17	32	49	227	3	230	469
05:30 PM	14	142	156	17	36	53	232	5	237	446
05:45 PM	17	99	116	18	55	73	185	5	190	379
Total	51	613	664	73	156	229	906	14	920	1813
Grand Total	123	1412	1535	174	357	531	1865	22	1887	3953
Apprch %	8	92		32.8	67.2		98.8	1.2		
Total %	3.1	35.7	38.8	4.4	9	13.4	47.2	0.6	47.7	

	Airport Drive Westbound			Terminal Way East Northbound			Airport Drive Eastbound			
Start Time	Left	Thru	App. Total	Left	Right	App. Total	Thru	Right	App. Total	Int. Total
Peak Hour Analysis From 04:15 PM to 05:00 PM - Peak 1 of 1										
Peak Hour for Entire Intersection Begins at 04:15 PM										
04:15 PM	**26**	193	**219**	22	55	77	239	**2**	241	537
04:30 PM	16	189	205	**46**	**89**	**135**	**265**	2	**267**	**607**
04:45 PM	9	**207**	216	20	42	62	231	2	233	511
05:00 PM	12	190	202	21	33	54	262	1	263	519
Total Volume	63	779	842	109	219	328	997	7	1004	2174
% App. Total	7.5	92.5		33.2	66.8		99.3	0.7		
PHF	.606	.941	.961	.592	.615	.607	.941	.875	.940	.895

Counts Unlimited, Inc.
PO Box 1178
Corona, CA 92878
(951)268-6268

City of Ontario
N/S: Terminal Way East
E/W: Airport Drive
Weather: Clear

File Name : 05_ONT_Term E_AP PM
Site Code : 00322818
Start Date : 9/20/2022

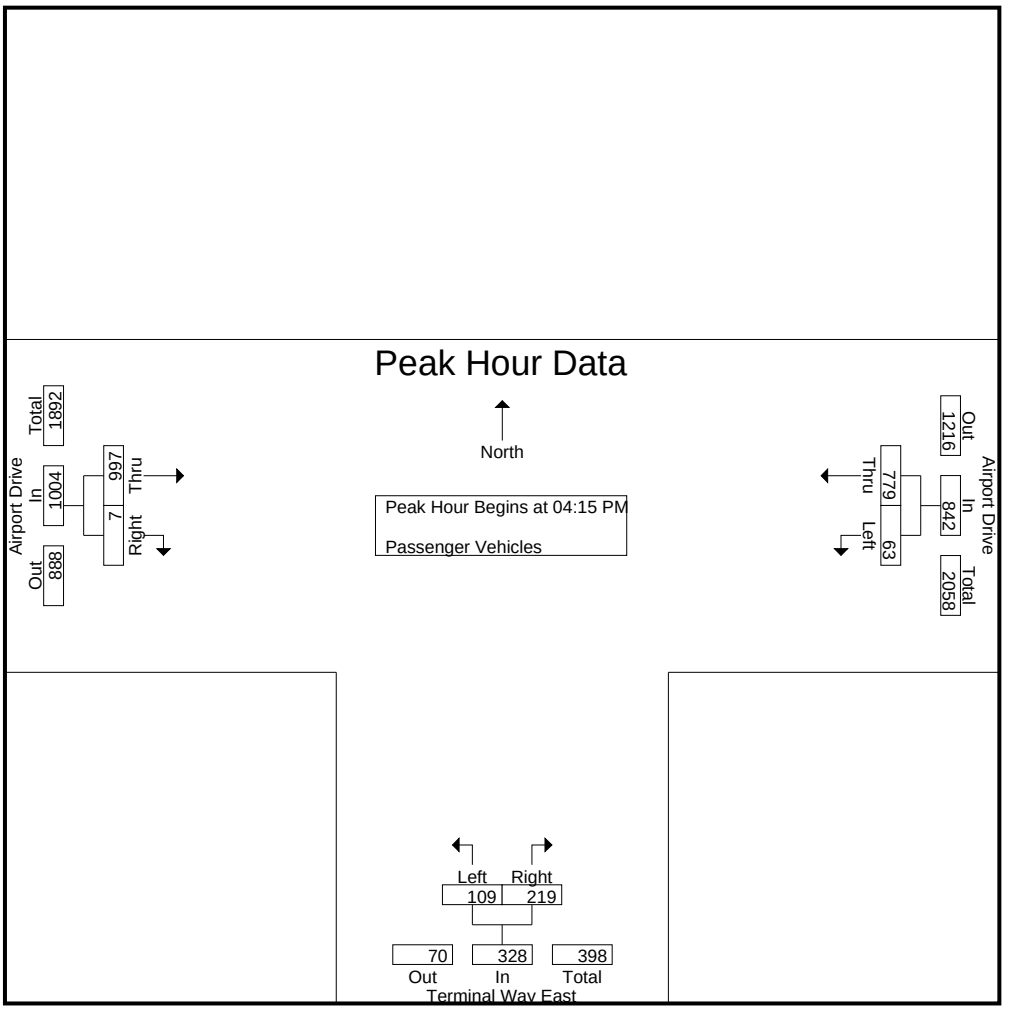

Peak Hour Analysis From 04:15 PM to 05:00 PM - Peak 1 of 1
Peak Hour for Each Approach Begins at:

	04:15 PM			04:15 PM			04:15 PM		
+0 mins.	**26**	193	**219**	22	55	77	239	**2**	241
+15 mins.	16	189	205	**46**	**89**	**135**	**265**	2	**267**
+30 mins.	9	**207**	216	20	42	62	231	2	233
+45 mins.	12	190	202	21	33	54	262	1	263
Total Volume	63	779	842	109	219	328	997	7	1004
% App. Total	7.5	92.5		33.2	66.8		99.3	0.7	
PHF	.606	.941	.961	.592	.615	.607	.941	.875	.940

Counts Unlimited, Inc.
PO Box 1178
Corona, CA 92878
(951)268-6268

City of Ontario
N/S: Terminal Way East
E/W: Airport Drive
Weather: Clear

File Name : 05_ONT_Term E_AP PM
Site Code : 00322818
Start Date : 9/20/2022

Groups Printed- Large 2 Axle Vehicles

	Airport Drive Westbound			Terminal Way East Northbound			Airport Drive Eastbound			
Start Time	Left	Thru	App. Total	Left	Right	App. Total	Thru	Right	App. Total	Int. Total
04:00 PM	0	6	6	1	0	1	8	0	8	15
04:15 PM	0	5	5	2	0	2	10	0	10	17
04:30 PM	0	6	6	2	0	2	13	0	13	21
04:45 PM	0	8	8	1	0	1	12	0	12	21
Total	0	25	25	6	0	6	43	0	43	74
05:00 PM	0	7	7	3	0	3	5	0	5	15
05:15 PM	0	7	7	2	0	2	8	0	8	17
05:30 PM	0	7	7	2	0	2	8	0	8	17
05:45 PM	0	6	6	1	1	2	8	0	8	16
Total	0	27	27	8	1	9	29	0	29	65
Grand Total	0	52	52	14	1	15	72	0	72	139
Apprch %	0	100		93.3	6.7		100	0		
Total %	0	37.4	37.4	10.1	0.7	10.8	51.8	0	51.8	

	Airport Drive Westbound			Terminal Way East Northbound			Airport Drive Eastbound			
Start Time	Left	Thru	App. Total	Left	Right	App. Total	Thru	Right	App. Total	Int. Total
Peak Hour Analysis From 04:15 PM to 05:00 PM - Peak 1 of 1										
Peak Hour for Entire Intersection Begins at 04:15 PM										
04:15 PM	0	5	5	2	0	2	10	0	10	17
04:30 PM	0	6	6	2	0	2	**13**	0	**13**	**21**
04:45 PM	0	**8**	**8**	1	0	1	12	0	12	21
05:00 PM	0	7	7	**3**	0	**3**	5	0	5	15
Total Volume	0	26	26	8	0	8	40	0	40	74
% App. Total	0	100		100	0		100	0		
PHF	.000	.813	.813	.667	.000	.667	.769	.000	.769	.881

Counts Unlimited, Inc.
PO Box 1178
Corona, CA 92878
(951)268-6268

City of Ontario
N/S: Terminal Way East
E/W: Airport Drive
Weather: Clear

File Name : 05_ONT_Term E_AP PM
Site Code : 00322818
Start Date : 9/20/2022
Page No : 2

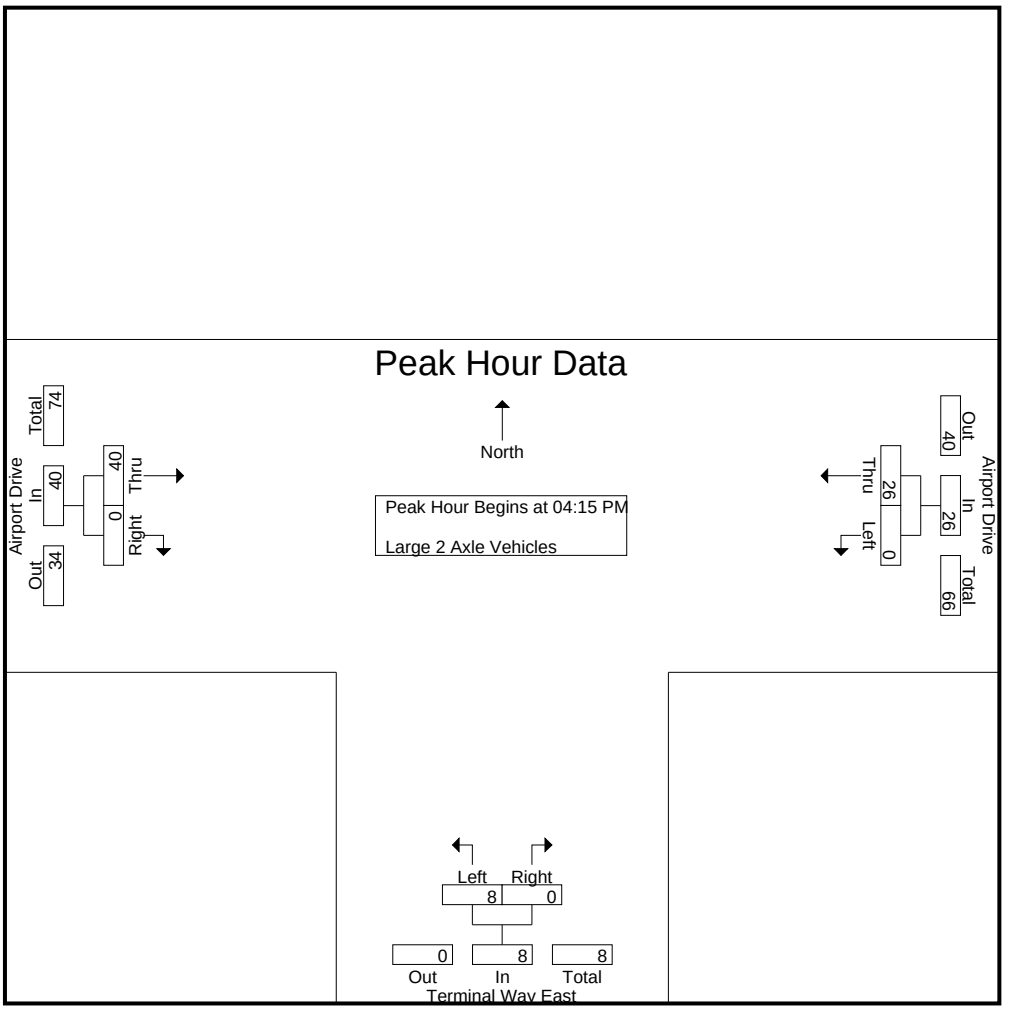

Peak Hour Analysis From 04:15 PM to 05:00 PM - Peak 1 of 1
Peak Hour for Each Approach Begins at:

	04:15 PM			04:15 PM			04:15 PM		
+0 mins.	0	5	5	2	0	2	10	0	10
+15 mins.	0	6	6	2	0	2	**13**	0	**13**
+30 mins.	0	**8**	**8**	1	0	1	12	0	12
+45 mins.	0	7	7	**3**	0	**3**	5	0	5
Total Volume	0	26	26	8	0	8	40	0	40
% App. Total	0	100		100	0		100	0	
PHF	.000	.813	.813	.667	.000	.667	.769	.000	.769

Counts Unlimited, Inc.
PO Box 1178
Corona, CA 92878
(951)268-6268

City of Ontario
N/S: Terminal Way East
E/W: Airport Drive
Weather: Clear

File Name : 05_ONT_Term E_AP PM
Site Code : 00322818
Start Date : 9/20/2022
Page No : 1

Groups Printed- 3 Axle Vehicles

	Airport Drive Westbound			Terminal Way East Northbound			Airport Drive Eastbound			
Start Time	Left	Thru	App. Total	Left	Right	App. Total	Thru	Right	App. Total	Int. Total
04:00 PM	0	0	0	0	1	1	1	0	1	2
04:15 PM	0	3	3	0	0	0	4	0	4	7
04:30 PM	0	0	0	0	0	0	4	0	4	4
04:45 PM	0	2	2	0	0	0	4	0	4	6
Total	0	5	5	0	1	1	13	0	13	19
05:00 PM	1	1	2	0	0	0	5	0	5	7
05:15 PM	0	1	1	0	0	0	3	0	3	4
05:30 PM	0	1	1	0	0	0	0	0	0	1
05:45 PM	0	1	1	0	0	0	2	0	2	3
Total	1	4	5	0	0	0	10	0	10	15
Grand Total	1	9	10	0	1	1	23	0	23	34
Apprch %	10	90		0	100		100	0		
Total %	2.9	26.5	29.4	0	2.9	2.9	67.6	0	67.6	

	Airport Drive Westbound			Terminal Way East Northbound			Airport Drive Eastbound			
Start Time	Left	Thru	App. Total	Left	Right	App. Total	Thru	Right	App. Total	Int. Total
Peak Hour Analysis From 04:15 PM to 05:00 PM - Peak 1 of 1										
Peak Hour for Entire Intersection Begins at 04:15 PM										
04:15 PM	0	**3**	**3**	0	0	0	4	0	4	**7**
04:30 PM	0	0	0	0	0	0	4	0	4	4
04:45 PM	0	2	2	0	0	0	4	0	4	6
05:00 PM	**1**	1	2	0	0	0	**5**	0	**5**	7
Total Volume	1	6	7	0	0	0	17	0	17	24
% App. Total	14.3	85.7		0	0		100	0		
PHF	.250	.500	.583	.000	.000	.000	.850	.000	.850	.857

Counts Unlimited, Inc.
PO Box 1178
Corona, CA 92878
(951)268-6268

City of Ontario
N/S: Terminal Way East
E/W: Airport Drive
Weather: Clear

File Name : 05_ONT_Term E_AP PM
Site Code : 00322818
Start Date : 9/20/2022
Page No : 2

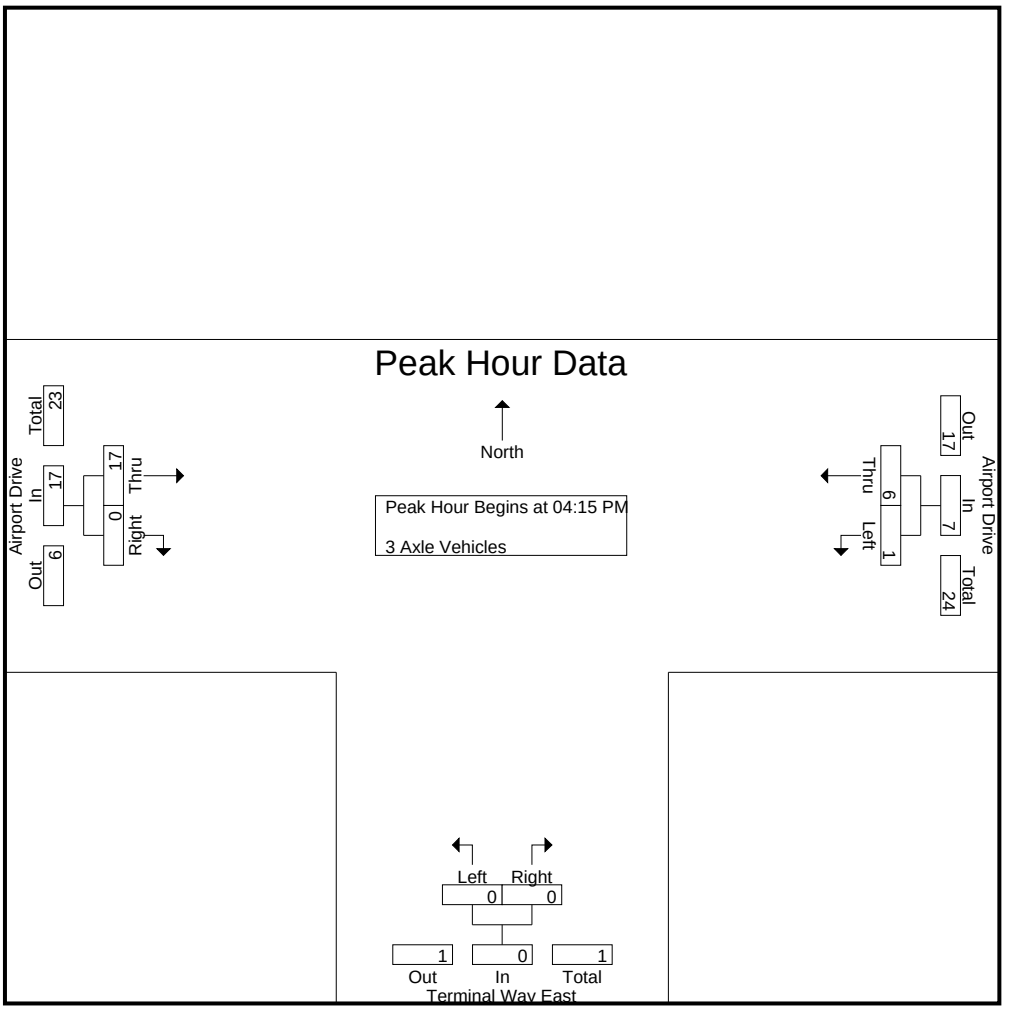

Peak Hour Analysis From 04:15 PM to 05:00 PM - Peak 1 of 1
Peak Hour for Each Approach Begins at:

	04:15 PM			04:15 PM			04:15 PM		
+0 mins.	0	**3**	**3**	0	0	0	4	0	4
+15 mins.	0	0	0	0	0	0	4	0	4
+30 mins.	0	2	2	0	0	0	4	0	4
+45 mins.	**1**	1	2	0	0	0	**5**	0	**5**
Total Volume	1	6	7	0	0	0	17	0	17
% App. Total	14.3	85.7		0	0		100	0	
PHF	.250	.500	.583	.000	.000	.000	.850	.000	.850

Counts Unlimited, Inc.
PO Box 1178
Corona, CA 92878
(951)268-6268

City of Ontario
N/S: Terminal Way East
E/W: Airport Drive
Weather: Clear

File Name : 05_ONT_Term E_AP PM
Site Code : 00322818
Start Date : 9/20/2022
Page No : 1

Groups Printed- 4+ Axle Trucks

	Airport Drive Westbound			Terminal Way East Northbound			Airport Drive Eastbound			
Start Time	Left	Thru	App. Total	Left	Right	App. Total	Thru	Right	App. Total	Int. Total
04:00 PM	0	2	2	0	0	0	5	0	5	7
04:15 PM	0	1	1	0	0	0	11	0	11	12
04:30 PM	0	2	2	0	0	0	9	0	9	11
04:45 PM	0	5	5	0	0	0	11	0	11	16
Total	0	10	10	0	0	0	36	0	36	46
05:00 PM	0	2	2	0	0	0	6	0	6	8
05:15 PM	0	1	1	0	0	0	1	0	1	2
05:30 PM	0	1	1	0	0	0	8	0	8	9
05:45 PM	0	0	0	0	0	0	5	0	5	5
Total	0	4	4	0	0	0	20	0	20	24
Grand Total	0	14	14	0	0	0	56	0	56	70
Apprch %	0	100		0	0		100	0		
Total %	0	20	20	0	0	0	80	0	80	

	Airport Drive Westbound			Terminal Way East Northbound			Airport Drive Eastbound			
Start Time	Left	Thru	App. Total	Left	Right	App. Total	Thru	Right	App. Total	Int. Total
Peak Hour Analysis From 04:15 PM to 05:00 PM - Peak 1 of 1										
Peak Hour for Entire Intersection Begins at 04:15 PM										
04:15 PM	0	1	1	0	0	0	**11**	0	**11**	12
04:30 PM	0	2	2	0	0	0	9	0	9	11
04:45 PM	0	**5**	**5**	0	0	0	11	0	11	**16**
05:00 PM	0	2	2	0	0	0	6	0	6	8
Total Volume	0	10	10	0	0	0	37	0	37	47
% App. Total	0	100		0	0		100	0		
PHF	.000	.500	.500	.000	.000	.000	.841	.000	.841	.734

Counts Unlimited, Inc.
PO Box 1178
Corona, CA 92878
(951)268-6268

City of Ontario
N/S: Terminal Way East
E/W: Airport Drive
Weather: Clear

File Name : 05_ONT_Term E_AP PM
Site Code : 00322818
Start Date : 9/20/2022
Page No : 2

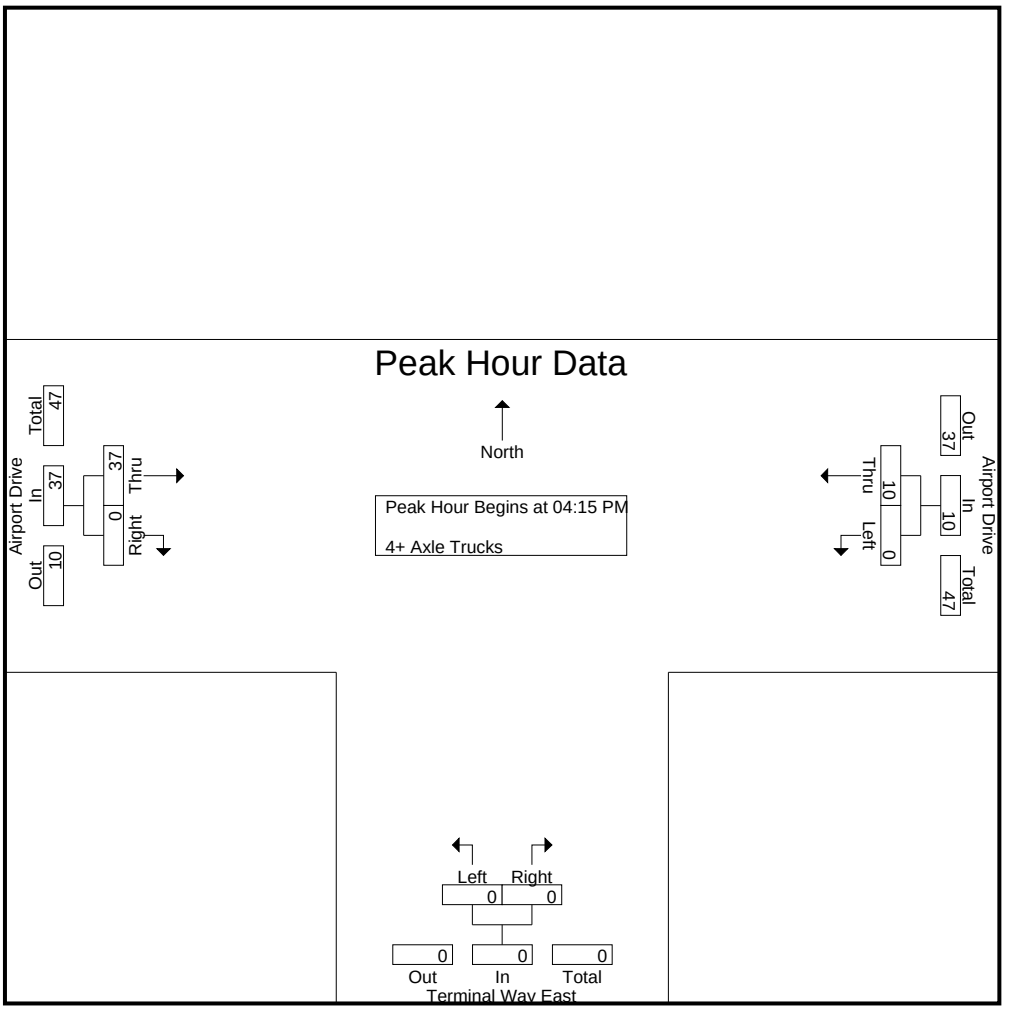

Peak Hour Analysis From 04:15 PM to 05:00 PM - Peak 1 of 1
Peak Hour for Each Approach Begins at:

	04:15 PM			04:15 PM			04:15 PM		
+0 mins.	0	1	1	0	0	0	**11**	0	**11**
+15 mins.	0	2	2	0	0	0	9	0	9
+30 mins.	0	**5**	**5**	0	0	0	11	0	11
+45 mins.	0	2	2	0	0	0	6	0	6
Total Volume	0	10	10	0	0	0	37	0	37
% App. Total	0	100		0	0		100	0	
PHF	.000	.500	.500	.000	.000	.000	.841	.000	.841

Location: Ontario
N/S: Terminal Way East
E/W: Airport Drive

Date: 9/20/2022
Day: Tuesday

PEDESTRIANS

	North Leg Dead End	East Leg Airport Drive	South Leg Terminal Way East	West Leg Airport Drive	
	Pedestrians	Pedestrians	Pedestrians	Pedestrians	
7:00 AM	0	0	0	0	0
7:15 AM	0	0	0	0	0
7:30 AM	0	0	0	0	0
7:45 AM	0	0	0	0	0
8:00 AM	0	0	0	0	0
8:15 AM	0	0	0	0	0
8:30 AM	0	0	1	0	1
8:45 AM	0	0	0	0	0
TOTAL VOLUMES:	0	0	1	0	1

	North Leg Dead End	East Leg Airport Drive	South Leg Terminal Way East	West Leg Airport Drive	
	Pedestrians	Pedestrians	Pedestrians	Pedestrians	
4:00 PM	0	0	0	0	0
4:15 PM	0	0	0	0	0
4:30 PM	0	0	0	0	0
4:45 PM	0	0	0	0	0
5:00 PM	0	0	0	0	0
5:15 PM	0	0	0	0	0
5:30 PM	0	0	0	0	0
5:45 PM	0	0	0	0	0
TOTAL VOLUMES:	0	0	0	0	0

Counts Unlimited, Inc.
PO Box 1178
Corona, CA 92878
951-268-6268

Location: Ontario
N/S: Terminal Way East
E/W: Airport Drive

Date: 9/20/2022
Day: Tuesday

BICYCLES

	Southbound Dead End			Westbound Airport Drive			Northbound Terminal Way East			Eastbound Airport Drive			
	Left	Thru	Right	Left	Thru	Right	Left	Thru	Right	Left	Thru	Right	
7:00 AM	0	0	0	0	0	0	0	0	0	0	0	0	0
7:15 AM	0	0	0	0	0	0	0	0	0	0	0	0	0
7:30 AM	0	0	0	0	0	0	0	0	0	0	0	0	0
7:45 AM	0	0	0	0	0	0	0	0	0	0	0	0	0
8:00 AM	0	0	0	0	0	0	0	0	0	0	0	0	0
8:15 AM	0	0	0	0	0	0	0	0	0	0	0	0	0
8:30 AM	0	0	0	0	0	0	0	0	0	0	0	0	0
8:45 AM	0	0	0	0	0	0	0	0	0	0	0	0	0
TOTAL VOLUMES:	0	0	0	0	0	0	0	0	0	0	0	0	0

	Southbound Dead End			Westbound Airport Drive			Northbound Terminal Way East			Eastbound Airport Drive			
	Left	Thru	Right	Left	Thru	Right	Left	Thru	Right	Left	Thru	Right	
4:00 PM	0	0	0	0	0	0	0	0	0	0	0	0	0
4:15 PM	0	0	0	0	0	0	0	0	0	0	0	0	0
4:30 PM	0	0	0	0	0	0	0	0	0	0	0	0	0
4:45 PM	0	0	0	0	0	0	0	0	0	0	0	0	0
5:00 PM	0	0	0	0	0	0	0	0	0	0	0	0	0
5:15 PM	0	0	0	0	0	0	0	0	0	0	0	0	0
5:30 PM	0	0	0	0	0	0	0	0	0	0	0	0	0
5:45 PM	0	0	0	0	0	0	0	0	0	0	0	0	0
TOTAL VOLUMES:	0	0	0	0	0	0	0	0	0	0	0	0	0

Counts Unlimited, Inc.
PO Box 1178
Corona, CA 92878
951-268-6268

Counts Unlimited, Inc.
PO Box 1178
Corona, CA 92878
(951)268-6268

City of Rancho Cucamonga
N/S: Milliken Avenue
E/W: Azusa Court
Weather: Clear

File Name : 07_RNC_Mil_Azu Ct AM
Site Code : 00322818
Start Date : 9/20/2022
Page No : 1

Groups Printed- Passenger Vehicles - Large 2 Axle Vehicles - 3 Axle Vehicles - 4+ Axle Trucks

	Milliken Avenue Southbound			Milliken Avenue Northbound			Azusa Court Eastbound			
Start Time	Thru	Right	App. Total	Left	Thru	App. Total	Left	Right	App. Total	Int. Total
07:00 AM	130	14	144	0	116	116	0	5	5	265
07:15 AM	147	6	153	0	128	128	0	1	1	282
07:30 AM	236	16	252	0	145	145	0	1	1	398
07:45 AM	246	24	270	0	208	208	0	2	2	480
Total	759	60	819	0	597	597	0	9	9	1425
08:00 AM	257	23	280	0	167	167	0	4	4	451
08:15 AM	276	7	283	0	189	189	0	4	4	476
08:30 AM	259	7	266	0	181	181	0	3	3	450
08:45 AM	210	18	228	0	189	189	0	4	4	421
Total	1002	55	1057	0	726	726	0	15	15	1798
Grand Total	1761	115	1876	0	1323	1323	0	24	24	3223
Apprch %	93.9	6.1		0	100		0	100		
Total %	54.6	3.6	58.2	0	41	41	0	0.7	0.7	
Passenger Vehicles	1643	113	1756	0	1221	1221	0	21	21	2998
% Passenger Vehicles	93.3	98.3	93.6	0	92.3	92.3	0	87.5	87.5	93
Large 2 Axle Vehicles	32	2	34	0	34	34	0	3	3	71
% Large 2 Axle Vehicles	1.8	1.7	1.8	0	2.6	2.6	0	12.5	12.5	2.2
3 Axle Vehicles	21	0	21	0	11	11	0	0	0	32
% 3 Axle Vehicles	1.2	0	1.1	0	0.8	0.8	0	0	0	1
4+ Axle Trucks	65	0	65	0	57	57	0	0	0	122
% 4+ Axle Trucks	3.7	0	3.5	0	4.3	4.3	0	0	0	3.8

	Milliken Avenue Southbound			Milliken Avenue Northbound			Azusa Court Eastbound			
Start Time	Thru	Right	App. Total	Left	Thru	App. Total	Left	Right	App. Total	Int. Total
Peak Hour Analysis From 07:00 AM to 08:45 AM - Peak 1 of 1										
Peak Hour for Entire Intersection Begins at 07:45 AM										
07:45 AM	246	**24**	270	0	**208**	**208**	0	2	2	**480**
08:00 AM	257	23	280	0	167	167	0	**4**	**4**	451
08:15 AM	**276**	7	**283**	0	189	189	0	4	4	476
08:30 AM	259	7	266	0	181	181	0	3	3	450
Total Volume	1038	61	1099	0	745	745	0	13	13	1857
% App. Total	94.4	5.6		0	100		0	100		
PHF	.940	.635	.971	.000	.895	.895	.000	.813	.813	.967

Counts Unlimited, Inc.
PO Box 1178
Corona, CA 92878
(951)268-6268

City of Rancho Cucamonga
N/S: Milliken Avenue
E/W: Azusa Court
Weather: Clear

File Name : 07_RNC_Mil_Azu Ct AM
Site Code : 00322818
Start Date : 9/20/2022
Page No : 2

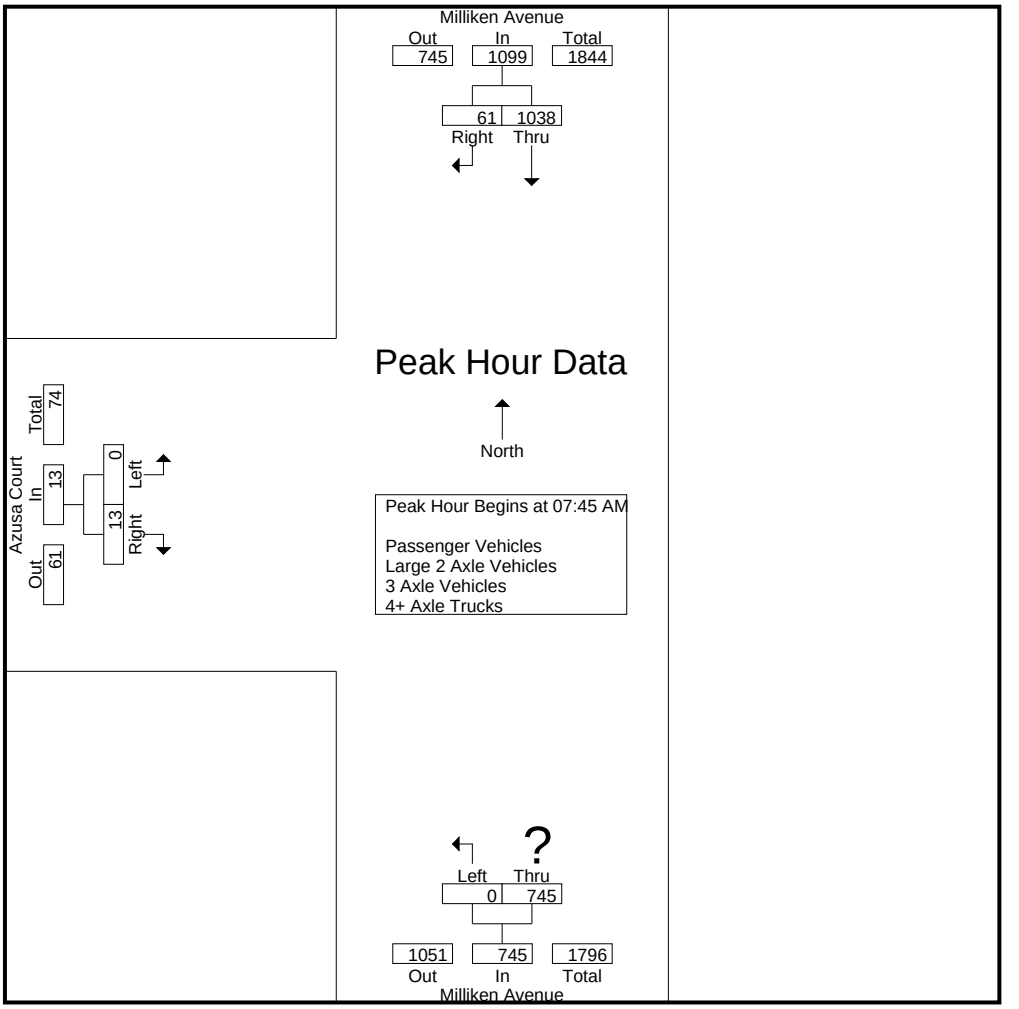

Peak Hour Analysis From 07:00 AM to 08:45 AM - Peak 1 of 1
Peak Hour for Each Approach Begins at:

	07:45 AM			07:45 AM			08:00 AM		
+0 mins.	246	**24**	270	0	**208**	**208**	0	**4**	**4**
+15 mins.	257	23	280	0	167	167	0	4	4
+30 mins.	**276**	7	**283**	0	189	189	0	3	3
+45 mins.	259	7	266	0	181	181	0	4	4
Total Volume	1038	61	1099	0	745	745	0	15	15
% App. Total	94.4	5.6		0	100		0	100	
PHF	.940	.635	.971	.000	.895	.895	.000	.938	.938

Counts Unlimited, Inc.
PO Box 1178
Corona, CA 92878
(951)268-6268

City of Rancho Cucamonga
N/S: Milliken Avenue
E/W: Azusa Court
Weather: Clear

File Name : 07_RNC_Mil_Azu Ct AM
Site Code : 00322818
Start Date : 9/20/2022
Page No : 1

Groups Printed- Passenger Vehicles

	Milliken Avenue Southbound			Milliken Avenue Northbound			Azusa Court Eastbound			
Start Time	Thru	Right	App. Total	Left	Thru	App. Total	Left	Right	App. Total	Int. Total
07:00 AM	118	14	132	0	105	105	0	4	4	241
07:15 AM	134	6	140	0	119	119	0	1	1	260
07:30 AM	215	15	230	0	135	135	0	0	0	365
07:45 AM	234	24	258	0	198	198	0	2	2	458
Total	701	59	760	0	557	557	0	7	7	1324
08:00 AM	244	23	267	0	156	156	0	4	4	427
08:15 AM	261	7	268	0	174	174	0	3	3	445
08:30 AM	240	6	246	0	164	164	0	3	3	413
08:45 AM	197	18	215	0	170	170	0	4	4	389
Total	942	54	996	0	664	664	0	14	14	1674
Grand Total	1643	113	1756	0	1221	1221	0	21	21	2998
Apprch %	93.6	6.4		0	100		0	100		
Total %	54.8	3.8	58.6	0	40.7	40.7	0	0.7	0.7	

	Milliken Avenue Southbound			Milliken Avenue Northbound			Azusa Court Eastbound			
Start Time	Thru	Right	App. Total	Left	Thru	App. Total	Left	Right	App. Total	Int. Total
Peak Hour Analysis From 07:45 AM to 08:30 AM - Peak 1 of 1										
Peak Hour for Entire Intersection Begins at 07:45 AM										
07:45 AM	234	**24**	258	0	**198**	**198**	0	2	2	**458**
08:00 AM	244	23	267	0	156	156	0	**4**	**4**	427
08:15 AM	**261**	7	**268**	0	174	174	0	3	3	445
08:30 AM	240	6	246	0	164	164	0	3	3	413
Total Volume	979	60	1039	0	692	692	0	12	12	1743
% App. Total	94.2	5.8		0	100		0	100		
PHF	.938	.625	.969	.000	.874	.874	.000	.750	.750	.951

Counts Unlimited, Inc.
PO Box 1178
Corona, CA 92878
(951)268-6268

City of Rancho Cucamonga
N/S: Milliken Avenue
E/W: Azusa Court
Weather: Clear

File Name : 07_RNC_Mil_Azu Ct AM
Site Code : 00322818
Start Date : 9/20/2022
Page No : 2

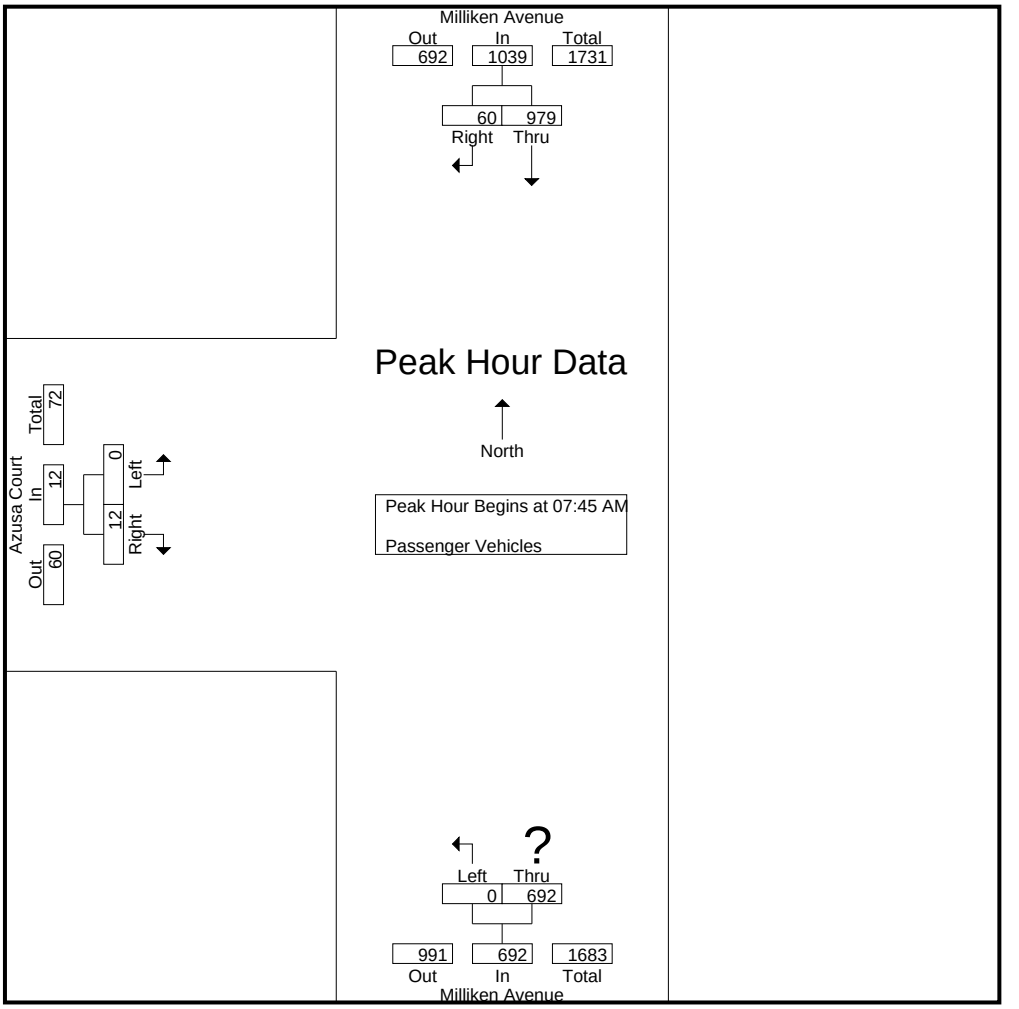

Peak Hour Analysis From 07:45 AM to 08:30 AM - Peak 1 of 1
Peak Hour for Each Approach Begins at:

	07:45 AM			07:45 AM			07:45 AM		
+0 mins.	234	**24**	258	0	**198**	**198**	0	2	2
+15 mins.	244	23	267	0	156	156	0	**4**	**4**
+30 mins.	**261**	7	**268**	0	174	174	0	3	3
+45 mins.	240	6	246	0	164	164	0	3	3
Total Volume	979	60	1039	0	692	692	0	12	12
% App. Total	94.2	5.8		0	100		0	100	
PHF	.938	.625	.969	.000	.874	.874	.000	.750	.750

Counts Unlimited, Inc.
PO Box 1178
Corona, CA 92878
(951)268-6268

City of Rancho Cucamonga
N/S: Milliken Avenue
E/W: Azusa Court
Weather: Clear

File Name : 07_RNC_Mil_Azu Ct AM
Site Code : 00322818
Start Date : 9/20/2022
Page No : 1

Groups Printed- Large 2 Axle Vehicles

	Milliken Avenue Southbound			Milliken Avenue Northbound			Azusa Court Eastbound			
Start Time	Thru	Right	App. Total	Left	Thru	App. Total	Left	Right	App. Total	Int. Total
07:00 AM	4	0	4	0	6	6	0	1	1	11
07:15 AM	5	0	5	0	2	2	0	0	0	7
07:30 AM	8	1	9	0	3	3	0	1	1	13
07:45 AM	2	0	2	0	4	4	0	0	0	6
Total	19	1	20	0	15	15	0	2	2	37
08:00 AM	3	0	3	0	4	4	0	0	0	7
08:15 AM	2	0	2	0	4	4	0	1	1	7
08:30 AM	6	1	7	0	7	7	0	0	0	14
08:45 AM	2	0	2	0	4	4	0	0	0	6
Total	13	1	14	0	19	19	0	1	1	34
Grand Total	32	2	34	0	34	34	0	3	3	71
Apprch %	94.1	5.9		0	100		0	100		
Total %	45.1	2.8	47.9	0	47.9	47.9	0	4.2	4.2	

	Milliken Avenue Southbound			Milliken Avenue Northbound			Azusa Court Eastbound			
Start Time	Thru	Right	App. Total	Left	Thru	App. Total	Left	Right	App. Total	Int. Total
Peak Hour Analysis From 07:45 AM to 08:30 AM - Peak 1 of 1										
Peak Hour for Entire Intersection Begins at 07:45 AM										
07:45 AM	2	0	2	0	4	4	0	0	0	6
08:00 AM	3	0	3	0	4	4	0	0	0	7
08:15 AM	2	0	2	0	4	4	0	**1**	**1**	7
08:30 AM	**6**	**1**	**7**	0	**7**	**7**	0	0	0	**14**
Total Volume	13	1	14	0	19	19	0	1	1	34
% App. Total	92.9	7.1		0	100		0	100		
PHF	.542	.250	.500	.000	.679	.679	.000	.250	.250	.607

Counts Unlimited, Inc.
PO Box 1178
Corona, CA 92878
(951)268-6268

City of Rancho Cucamonga
N/S: Milliken Avenue
E/W: Azusa Court
Weather: Clear

File Name : 07_RNC_Mil_Azu Ct AM
Site Code : 00322818
Start Date : 9/20/2022
Page No : 2

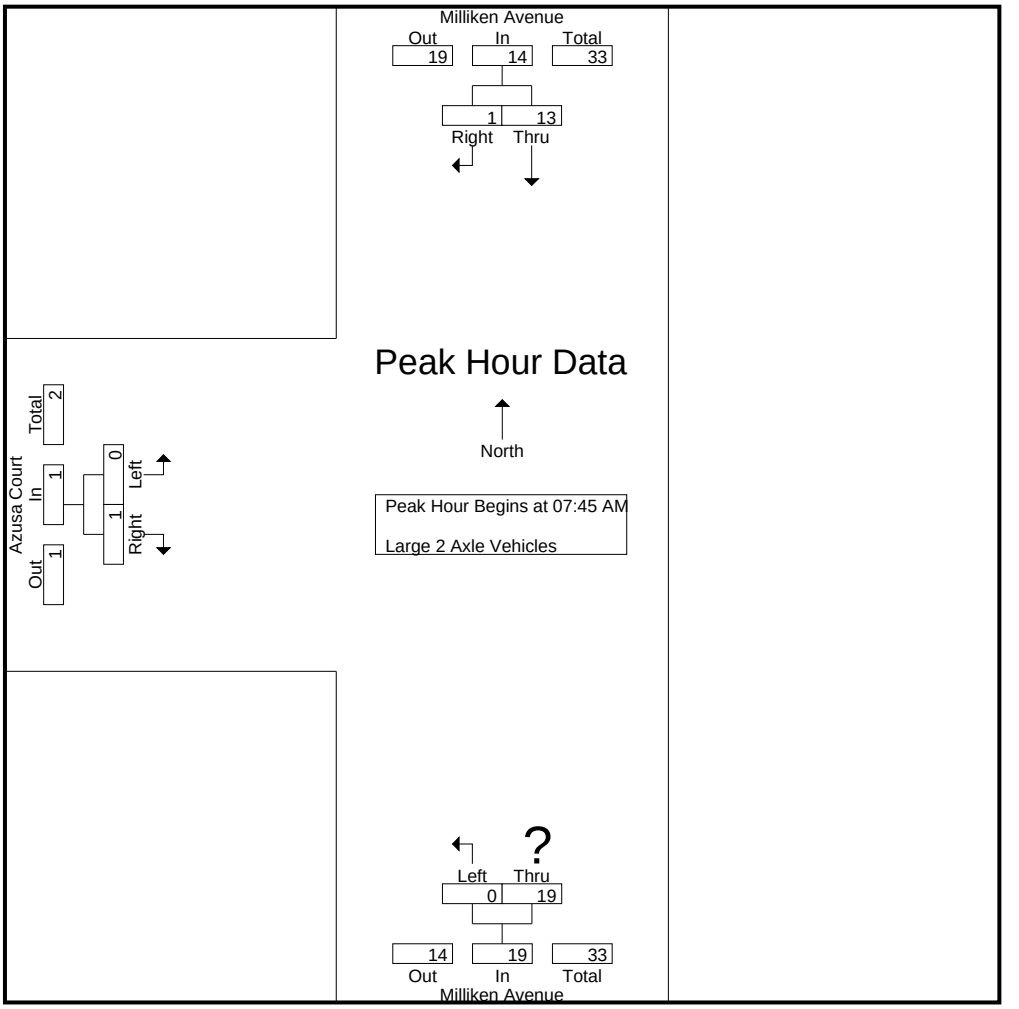

Peak Hour Analysis From 07:45 AM to 08:30 AM - Peak 1 of 1
Peak Hour for Each Approach Begins at:

	07:45 AM			07:45 AM			07:45 AM		
+0 mins.	2	0	2	0	4	4	0	0	0
+15 mins.	3	0	3	0	4	4	0	0	0
+30 mins.	2	0	2	0	4	4	0	**1**	**1**
+45 mins.	**6**	**1**	**7**	0	**7**	**7**	0	0	0
Total Volume	13	1	14	0	19	19	0	1	1
% App. Total	92.9	7.1		0	100		0	100	
PHF	.542	.250	.500	.000	.679	.679	.000	.250	.250

Counts Unlimited, Inc.
PO Box 1178
Corona, CA 92878
(951)268-6268

City of Rancho Cucamonga
N/S: Milliken Avenue
E/W: Azusa Court
Weather: Clear

File Name : 07_RNC_Mil_Azu Ct AM
Site Code : 00322818
Start Date : 9/20/2022
Page No : 1

Groups Printed- 3 Axle Vehicles

	Milliken Avenue Southbound			Milliken Avenue Northbound			Azusa Court Eastbound			
Start Time	Thru	Right	App. Total	Left	Thru	App. Total	Left	Right	App. Total	Int. Total
07:00 AM	1	0	1	0	1	1	0	0	0	2
07:15 AM	1	0	1	0	1	1	0	0	0	2
07:30 AM	4	0	4	0	1	1	0	0	0	5
07:45 AM	2	0	2	0	1	1	0	0	0	3
Total	8	0	8	0	4	4	0	0	0	12
08:00 AM	1	0	1	0	1	1	0	0	0	2
08:15 AM	4	0	4	0	4	4	0	0	0	8
08:30 AM	6	0	6	0	1	1	0	0	0	7
08:45 AM	2	0	2	0	1	1	0	0	0	3
Total	13	0	13	0	7	7	0	0	0	20
Grand Total	21	0	21	0	11	11	0	0	0	32
Apprch %	100	0		0	100		0	0		
Total %	65.6	0	65.6	0	34.4	34.4	0	0	0	

	Milliken Avenue Southbound			Milliken Avenue Northbound			Azusa Court Eastbound			
Start Time	Thru	Right	App. Total	Left	Thru	App. Total	Left	Right	App. Total	Int. Total
Peak Hour Analysis From 07:45 AM to 08:30 AM - Peak 1 of 1										
Peak Hour for Entire Intersection Begins at 07:45 AM										
07:45 AM	2	0	2	0	1	1	0	0	0	3
08:00 AM	1	0	1	0	1	1	0	0	0	2
08:15 AM	4	0	4	0	**4**	**4**	0	0	0	**8**
08:30 AM	**6**	0	**6**	0	1	1	0	0	0	7
Total Volume	13	0	13	0	7	7	0	0	0	20
% App. Total	100	0		0	100		0	0		
PHF	.542	.000	.542	.000	.438	.438	.000	.000	.000	.625

Counts Unlimited, Inc.
PO Box 1178
Corona, CA 92878
(951)268-6268

City of Rancho Cucamonga
N/S: Milliken Avenue
E/W: Azusa Court
Weather: Clear

File Name : 07_RNC_Mil_Azu Ct AM
Site Code : 00322818
Start Date : 9/20/2022
Page No : 2

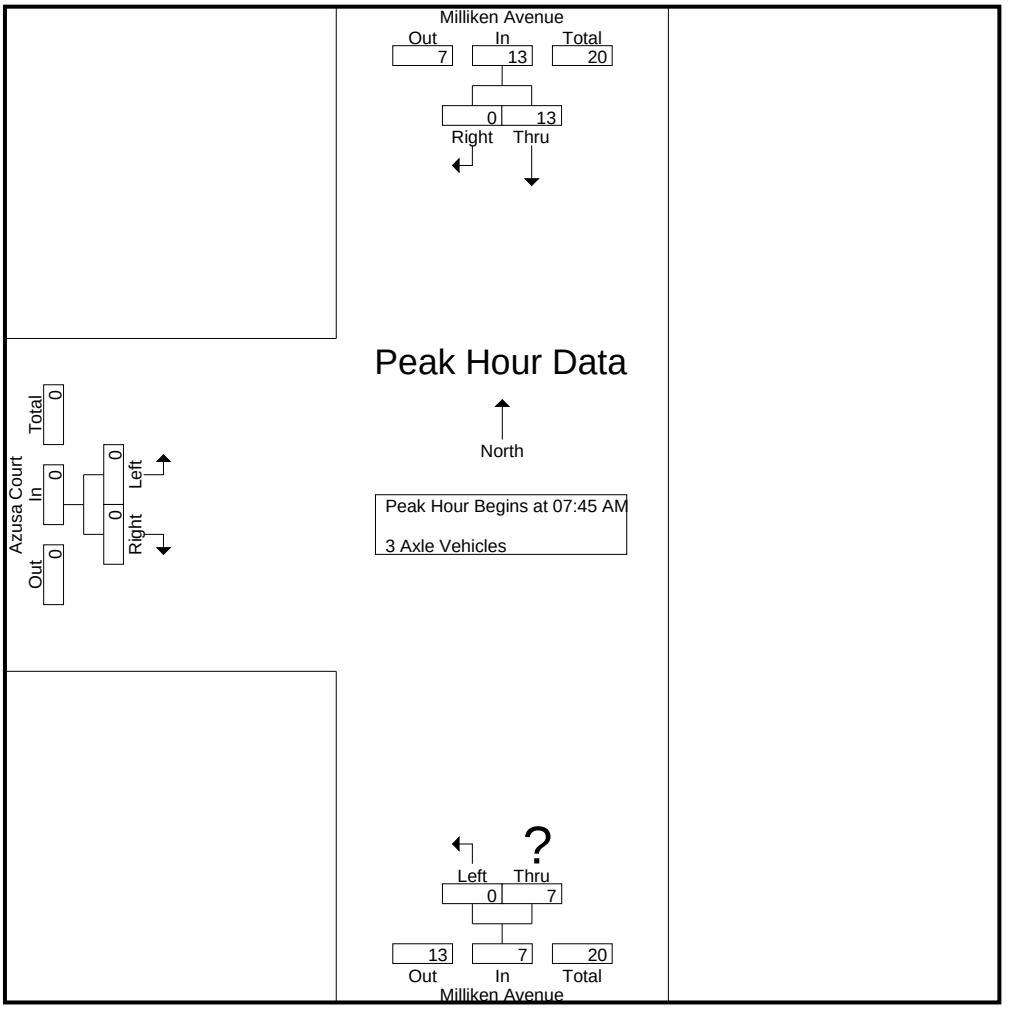

Peak Hour Analysis From 07:45 AM to 08:30 AM - Peak 1 of 1
Peak Hour for Each Approach Begins at:

	07:45 AM			07:45 AM			07:45 AM		
+0 mins.	2	0	2	0	1	1	0	0	0
+15 mins.	1	0	1	0	1	1	0	0	0
+30 mins.	4	0	4	0	**4**	**4**	0	0	0
+45 mins.	**6**	0	**6**	0	1	1	0	0	0
Total Volume	13	0	13	0	7	7	0	0	0
% App. Total	100	0		0	100		0	0	
PHF	.542	.000	.542	.000	.438	.438	.000	.000	.000

Counts Unlimited, Inc.
PO Box 1178
Corona, CA 92878
(951)268-6268

City of Rancho Cucamonga
N/S: Milliken Avenue
E/W: Azusa Court
Weather: Clear

File Name : 07_RNC_Mil_Azu Ct AM
Site Code : 00322818
Start Date : 9/20/2022
Page No : 1

Groups Printed- 4+ Axle Trucks

	Milliken Avenue Southbound			Milliken Avenue Northbound			Azusa Court Eastbound			
Start Time	Thru	Right	App. Total	Left	Thru	App. Total	Left	Right	App. Total	Int. Total
07:00 AM	7	0	7	0	4	4	0	0	0	11
07:15 AM	7	0	7	0	6	6	0	0	0	13
07:30 AM	9	0	9	0	6	6	0	0	0	15
07:45 AM	8	0	8	0	5	5	0	0	0	13
Total	31	0	31	0	21	21	0	0	0	52
08:00 AM	9	0	9	0	6	6	0	0	0	15
08:15 AM	9	0	9	0	7	7	0	0	0	16
08:30 AM	7	0	7	0	9	9	0	0	0	16
08:45 AM	9	0	9	0	14	14	0	0	0	23
Total	34	0	34	0	36	36	0	0	0	70
Grand Total	65	0	65	0	57	57	0	0	0	122
Apprch %	100	0		0	100		0	0		
Total %	53.3	0	53.3	0	46.7	46.7	0	0	0	

	Milliken Avenue Southbound			Milliken Avenue Northbound			Azusa Court Eastbound			
Start Time	Thru	Right	App. Total	Left	Thru	App. Total	Left	Right	App. Total	Int. Total
Peak Hour Analysis From 07:45 AM to 08:30 AM - Peak 1 of 1										
Peak Hour for Entire Intersection Begins at 07:45 AM										
07:45 AM	8	0	8	0	5	5	0	0	0	13
08:00 AM	**9**	0	**9**	0	6	6	0	0	0	15
08:15 AM	9	0	9	0	7	7	0	0	0	**16**
08:30 AM	7	0	7	0	**9**	**9**	0	0	0	16
Total Volume	33	0	33	0	27	27	0	0	0	60
% App. Total	100	0		0	100		0	0		
PHF	.917	.000	.917	.000	.750	.750	.000	.000	.000	.938

Counts Unlimited, Inc.
PO Box 1178
Corona, CA 92878
(951)268-6268

City of Rancho Cucamonga
N/S: Milliken Avenue
E/W: Azusa Court
Weather: Clear

File Name : 07_RNC_Mil_Azu Ct AM
Site Code : 00322818
Start Date : 9/20/2022
Page No : 2

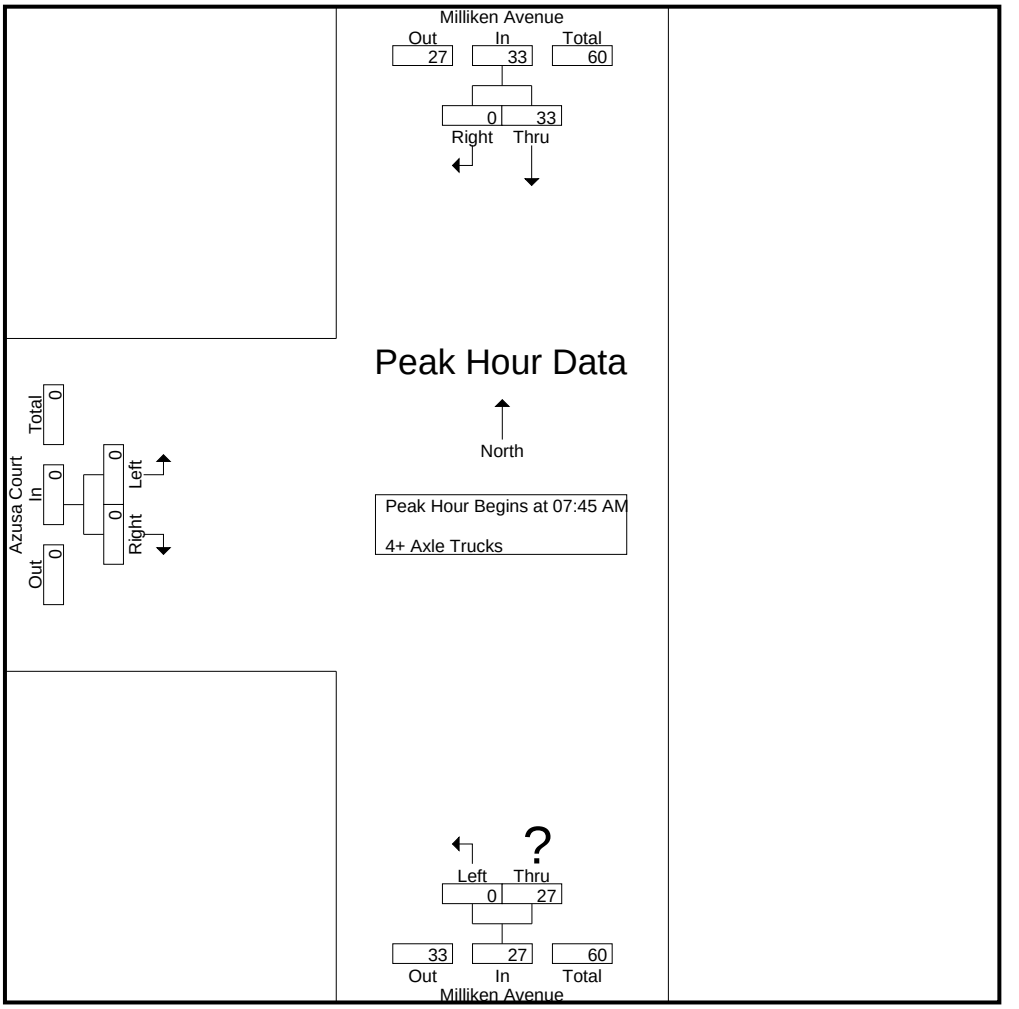

Peak Hour Analysis From 07:45 AM to 08:30 AM - Peak 1 of 1
Peak Hour for Each Approach Begins at:

	07:45 AM			07:45 AM			07:45 AM		
+0 mins.	8	0	8	0	5	5	0	0	0
+15 mins.	**9**	0	**9**	0	6	6	0	0	0
+30 mins.	9	0	9	0	7	7	0	0	0
+45 mins.	7	0	7	0	**9**	**9**	0	0	0
Total Volume	33	0	33	0	27	27	0	0	0
% App. Total	100	0		0	100		0	0	
PHF	.917	.000	.917	.000	.750	.750	.000	.000	.000

Counts Unlimited, Inc.
PO Box 1178
Corona, CA 92878
(951)268-6268

City of Rancho Cucamonga
N/S: Milliken Avenue
E/W: Azusa Court
Weather: Clear

File Name : 07_RNC_Mil_Azu Ct PM
Site Code : 00322818
Start Date : 9/20/2022
Page No : 1

Groups Printed- Passenger Vehicles - Large 2 Axle Vehicles - 3 Axle Vehicles - 4+ Axle Trucks

	Milliken Avenue Southbound			Milliken Avenue Northbound			Azusa Court Eastbound			
Start Time	Thru	Right	App. Total	Left	Thru	App. Total	Left	Right	App. Total	Int. Total
04:00 PM	210	6	216	0	414	414	0	9	9	639
04:15 PM	227	3	230	0	386	386	0	4	4	620
04:30 PM	228	5	233	0	405	405	0	1	1	639
04:45 PM	231	14	245	0	417	417	0	20	20	682
Total	896	28	924	0	1622	1622	0	34	34	2580
05:00 PM	241	7	248	0	478	478	0	9	9	735
05:15 PM	233	2	235	0	492	492	0	6	6	733
05:30 PM	201	4	205	0	438	438	0	1	1	644
05:45 PM	169	11	180	0	374	374	0	8	8	562
Total	844	24	868	0	1782	1782	0	24	24	2674
Grand Total	1740	52	1792	0	3404	3404	0	58	58	5254
Apprch %	97.1	2.9		0	100		0	100		
Total %	33.1	1	34.1	0	64.8	64.8	0	1.1	1.1	
Passenger Vehicles	1665	48	1713	0	3313	3313	0	55	55	5081
% Passenger Vehicles	95.7	92.3	95.6	0	97.3	97.3	0	94.8	94.8	96.7
Large 2 Axle Vehicles	24	4	28	0	25	25	0	2	2	55
% Large 2 Axle Vehicles	1.4	7.7	1.6	0	0.7	0.7	0	3.4	3.4	1
3 Axle Vehicles	4	0	4	0	20	20	0	0	0	24
% 3 Axle Vehicles	0.2	0	0.2	0	0.6	0.6	0	0	0	0.5
4+ Axle Trucks	47	0	47	0	46	46	0	1	1	94
% 4+ Axle Trucks	2.7	0	2.6	0	1.4	1.4	0	1.7	1.7	1.8

	Milliken Avenue Southbound			Milliken Avenue Northbound			Azusa Court Eastbound			
Start Time	Thru	Right	App. Total	Left	Thru	App. Total	Left	Right	App. Total	Int. Total
Peak Hour Analysis From 04:00 PM to 05:45 PM - Peak 1 of 1										
Peak Hour for Entire Intersection Begins at 04:45 PM										
04:45 PM	231	**14**	245	0	417	417	0	**20**	**20**	682
05:00 PM	**241**	7	**248**	0	478	478	0	9	9	**735**
05:15 PM	233	2	235	0	**492**	**492**	0	6	6	733
05:30 PM	201	4	205	0	438	438	0	1	1	644
Total Volume	906	27	933	0	1825	1825	0	36	36	2794
% App. Total	97.1	2.9		0	100		0	100		
PHF	.940	.482	.941	.000	.927	.927	.000	.450	.450	.950

Counts Unlimited, Inc.
PO Box 1178
Corona, CA 92878
(951)268-6268

City of Rancho Cucamonga
N/S: Milliken Avenue
E/W: Azusa Court
Weather: Clear

File Name : 07_RNC_Mil_Azu Ct PM
Site Code : 00322818
Start Date : 9/20/2022
Page No : 2

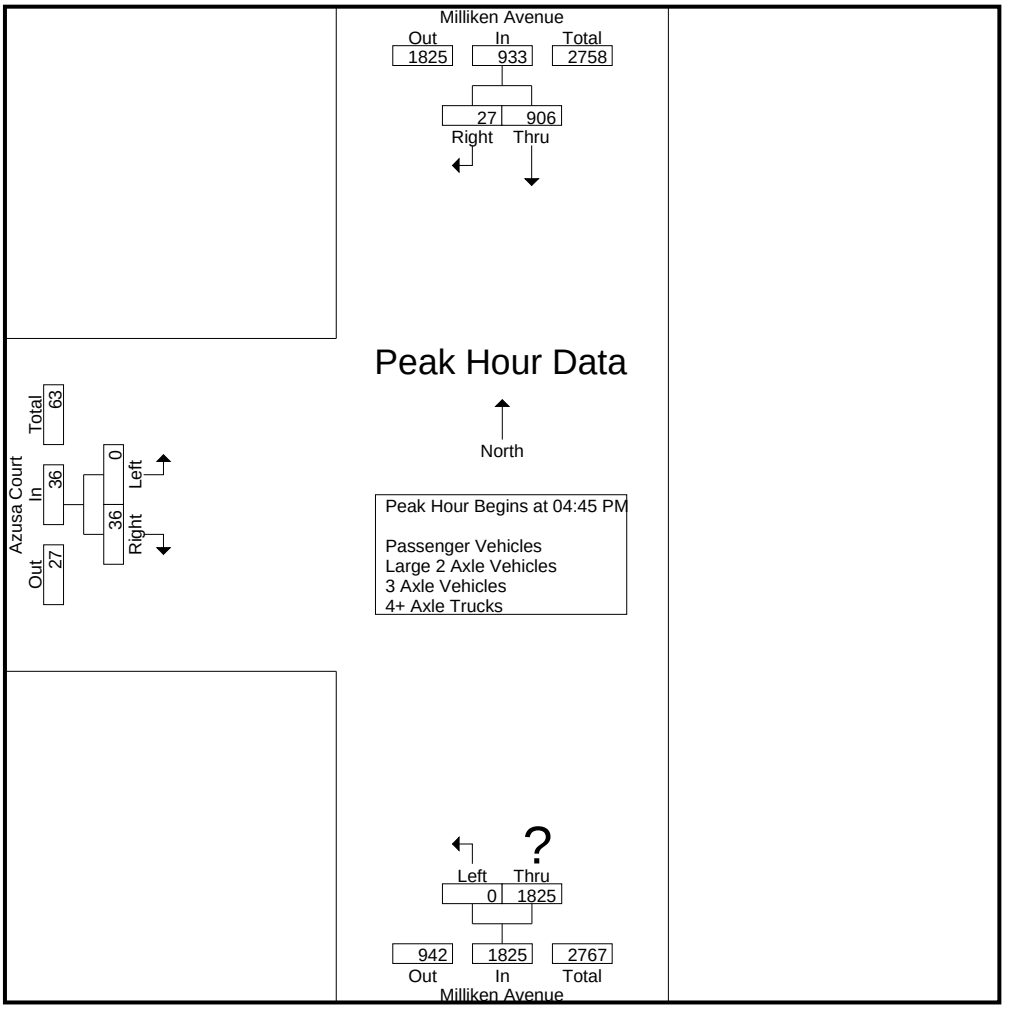

Peak Hour Analysis From 04:00 PM to 05:45 PM - Peak 1 of 1
Peak Hour for Each Approach Begins at:

	04:30 PM			04:45 PM			04:30 PM		
+0 mins.	228	5	233	0	417	417	0	1	1
+15 mins.	231	**14**	245	0	478	478	0	**20**	**20**
+30 mins.	**241**	7	**248**	0	**492**	**492**	0	9	9
+45 mins.	233	2	235	0	438	438	0	6	6
Total Volume	933	28	961	0	1825	1825	0	36	36
% App. Total	97.1	2.9		0	100		0	100	
PHF	.968	.500	.969	.000	.927	.927	.000	.450	.450

Counts Unlimited, Inc.
PO Box 1178
Corona, CA 92878
(951)268-6268

City of Rancho Cucamonga
N/S: Milliken Avenue
E/W: Azusa Court
Weather: Clear

File Name : 07_RNC_Mil_Azu Ct PM
Site Code : 00322818
Start Date : 9/20/2022
Page No : 1

Groups Printed- Passenger Vehicles

	Milliken Avenue Southbound			Milliken Avenue Northbound			Azusa Court Eastbound			
Start Time	Thru	Right	App. Total	Left	Thru	App. Total	Left	Right	App. Total	Int. Total
04:00 PM	196	5	201	0	401	401	0	8	8	610
04:15 PM	221	3	224	0	373	373	0	4	4	601
04:30 PM	218	5	223	0	387	387	0	1	1	611
04:45 PM	219	13	232	0	406	406	0	20	20	658
Total	854	26	880	0	1567	1567	0	33	33	2480
05:00 PM	227	6	233	0	467	467	0	9	9	709
05:15 PM	230	2	232	0	484	484	0	5	5	721
05:30 PM	189	4	193	0	431	431	0	0	0	624
05:45 PM	165	10	175	0	364	364	0	8	8	547
Total	811	22	833	0	1746	1746	0	22	22	2601
Grand Total	1665	48	1713	0	3313	3313	0	55	55	5081
Apprch %	97.2	2.8		0	100		0	100		
Total %	32.8	0.9	33.7	0	65.2	65.2	0	1.1	1.1	

	Milliken Avenue Southbound			Milliken Avenue Northbound			Azusa Court Eastbound			
Start Time	Thru	Right	App. Total	Left	Thru	App. Total	Left	Right	App. Total	Int. Total
Peak Hour Analysis From 04:45 PM to 05:30 PM - Peak 1 of 1										
Peak Hour for Entire Intersection Begins at 04:45 PM										
04:45 PM	219	**13**	232	0	406	406	0	**20**	**20**	658
05:00 PM	227	6	**233**	0	467	467	0	9	9	709
05:15 PM	**230**	2	232	0	**484**	**484**	0	5	5	**721**
05:30 PM	189	4	193	0	431	431	0	0	0	624
Total Volume	865	25	890	0	1788	1788	0	34	34	2712
% App. Total	97.2	2.8		0	100		0	100		
PHF	.940	.481	.955	.000	.924	.924	.000	.425	.425	.940

Counts Unlimited, Inc.
PO Box 1178
Corona, CA 92878
(951)268-6268

City of Rancho Cucamonga
N/S: Milliken Avenue
E/W: Azusa Court
Weather: Clear

File Name : 07_RNC_Mil_Azu Ct PM
Site Code : 00322818
Start Date : 9/20/2022
Page No : 2

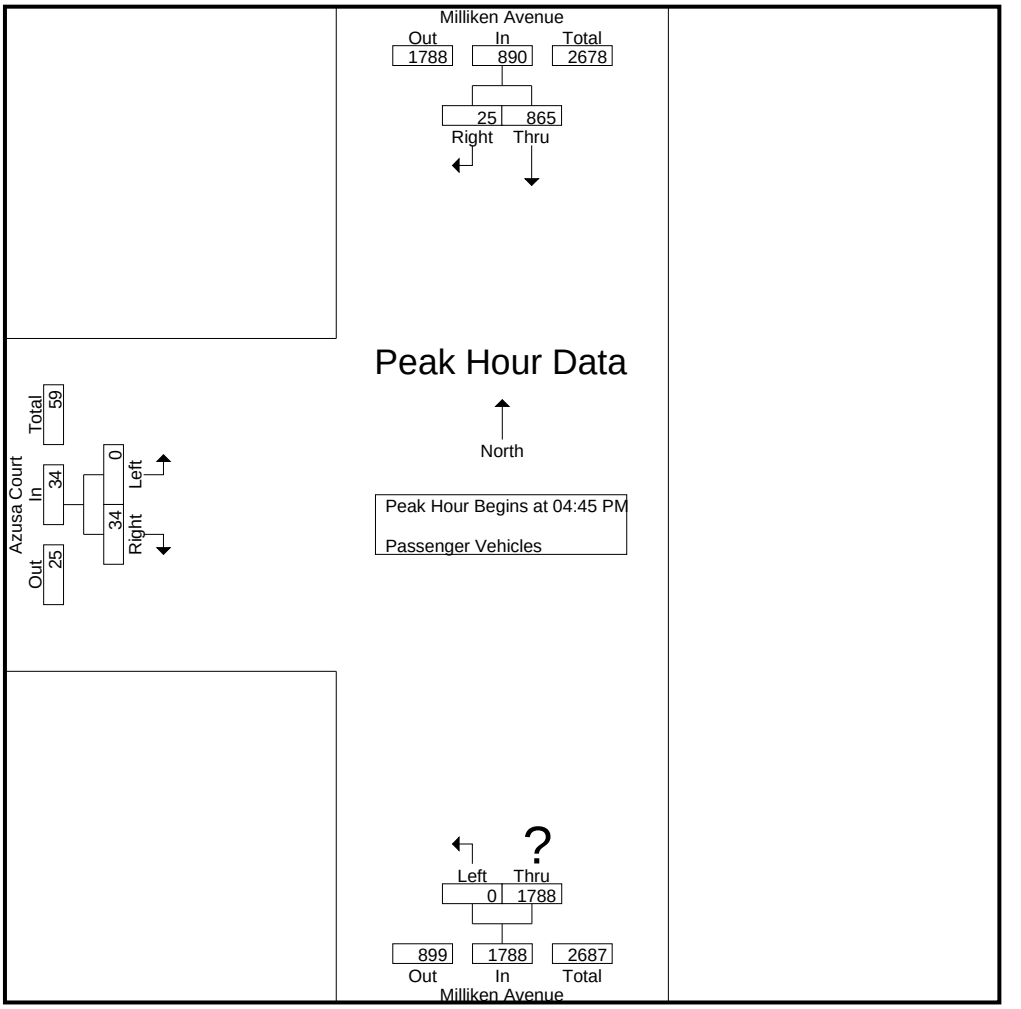

Peak Hour Analysis From 04:45 PM to 05:30 PM - Peak 1 of 1
Peak Hour for Each Approach Begins at:

	04:45 PM			04:45 PM			04:45 PM		
+0 mins.	219	**13**	232	0	406	406	0	**20**	**20**
+15 mins.	227	6	**233**	0	467	467	0	9	9
+30 mins.	**230**	2	232	0	**484**	**484**	0	5	5
+45 mins.	189	4	193	0	431	431	0	0	0
Total Volume	865	25	890	0	1788	1788	0	34	34
% App. Total	97.2	2.8		0	100		0	100	
PHF	.940	.481	.955	.000	.924	.924	.000	.425	.425

Counts Unlimited, Inc.
PO Box 1178
Corona, CA 92878
(951)268-6268

City of Rancho Cucamonga
N/S: Milliken Avenue
E/W: Azusa Court
Weather: Clear

File Name : 07_RNC_Mil_Azu Ct PM
Site Code : 00322818
Start Date : 9/20/2022
Page No : 1

Groups Printed- Large 2 Axle Vehicles

	Milliken Avenue Southbound			Milliken Avenue Northbound			Azusa Court Eastbound			
Start Time	Thru	Right	App. Total	Left	Thru	App. Total	Left	Right	App. Total	Int. Total
04:00 PM	2	1	3	0	1	1	0	1	1	5
04:15 PM	2	0	2	0	3	3	0	0	0	5
04:30 PM	5	0	5	0	6	6	0	0	0	11
04:45 PM	3	1	4	0	5	5	0	0	0	9
Total	12	2	14	0	15	15	0	1	1	30
05:00 PM	2	1	3	0	4	4	0	0	0	7
05:15 PM	1	0	1	0	4	4	0	1	1	6
05:30 PM	7	0	7	0	1	1	0	0	0	8
05:45 PM	2	1	3	0	1	1	0	0	0	4
Total	12	2	14	0	10	10	0	1	1	25
Grand Total	24	4	28	0	25	25	0	2	2	55
Apprch %	85.7	14.3		0	100		0	100		
Total %	43.6	7.3	50.9	0	45.5	45.5	0	3.6	3.6	

	Milliken Avenue Southbound			Milliken Avenue Northbound			Azusa Court Eastbound			
Start Time	Thru	Right	App. Total	Left	Thru	App. Total	Left	Right	App. Total	Int. Total
Peak Hour Analysis From 04:45 PM to 05:30 PM - Peak 1 of 1										
Peak Hour for Entire Intersection Begins at 04:45 PM										
04:45 PM	3	**1**	4	0	**5**	**5**	0	0	0	**9**
05:00 PM	2	1	3	0	4	4	0	0	0	7
05:15 PM	1	0	1	0	4	4	0	**1**	**1**	6
05:30 PM	**7**	0	**7**	0	1	1	0	0	0	8
Total Volume	13	2	15	0	14	14	0	1	1	30
% App. Total	86.7	13.3		0	100		0	100		
PHF	.464	.500	.536	.000	.700	.700	.000	.250	.250	.833

Counts Unlimited, Inc.
PO Box 1178
Corona, CA 92878
(951)268-6268

City of Rancho Cucamonga
N/S: Milliken Avenue
E/W: Azusa Court
Weather: Clear

File Name : 07_RNC_Mil_Azu Ct PM
Site Code : 00322818
Start Date : 9/20/2022
Page No : 2

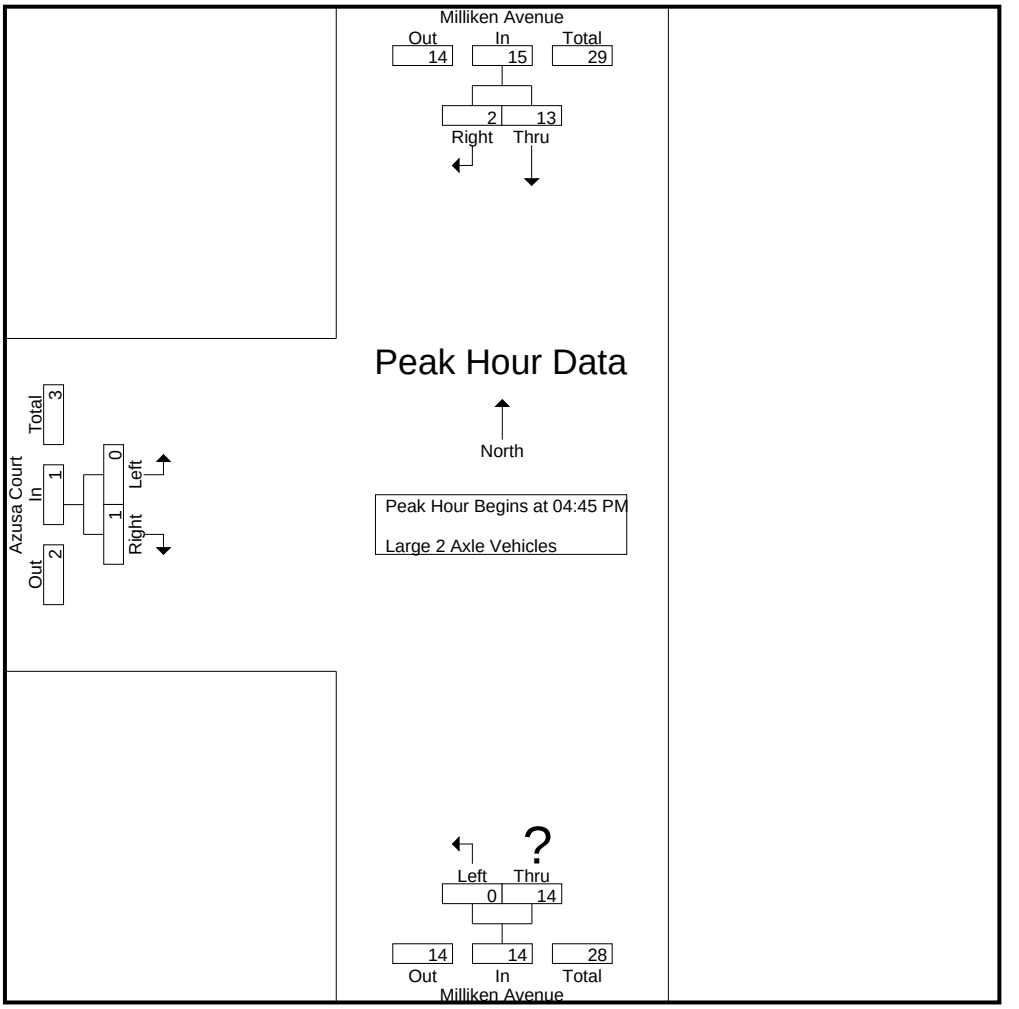

Peak Hour Analysis From 04:45 PM to 05:30 PM - Peak 1 of 1
Peak Hour for Each Approach Begins at:

	04:45 PM			04:45 PM			04:45 PM		
+0 mins.	3	**1**	4	0	**5**	**5**	0	0	0
+15 mins.	2	1	3	0	4	4	0	0	0
+30 mins.	1	0	1	0	4	4	0	**1**	**1**
+45 mins.	**7**	0	**7**	0	1	1	0	0	0
Total Volume	13	2	15	0	14	14	0	1	1
% App. Total	86.7	13.3		0	100		0	100	
PHF	.464	.500	.536	.000	.700	.700	.000	.250	.250

Counts Unlimited, Inc.
PO Box 1178
Corona, CA 92878
(951)268-6268

City of Rancho Cucamonga
N/S: Milliken Avenue
E/W: Azusa Court
Weather: Clear

File Name : 07_RNC_Mil_Azu Ct PM
Site Code : 00322818
Start Date : 9/20/2022
Page No : 1

Groups Printed- 3 Axle Vehicles

	Milliken Avenue Southbound			Milliken Avenue Northbound			Azusa Court Eastbound			
Start Time	Thru	Right	App. Total	Left	Thru	App. Total	Left	Right	App. Total	Int. Total
04:00 PM	1	0	1	0	4	4	0	0	0	5
04:15 PM	0	0	0	0	2	2	0	0	0	2
04:30 PM	0	0	0	0	3	3	0	0	0	3
04:45 PM	2	0	2	0	3	3	0	0	0	5
Total	3	0	3	0	12	12	0	0	0	15
05:00 PM	0	0	0	0	2	2	0	0	0	2
05:15 PM	0	0	0	0	2	2	0	0	0	2
05:30 PM	0	0	0	0	1	1	0	0	0	1
05:45 PM	1	0	1	0	3	3	0	0	0	4
Total	1	0	1	0	8	8	0	0	0	9
Grand Total	4	0	4	0	20	20	0	0	0	24
Apprch %	100	0		0	100		0	0		
Total %	16.7	0	16.7	0	83.3	83.3	0	0	0	

	Milliken Avenue Southbound			Milliken Avenue Northbound			Azusa Court Eastbound			
Start Time	Thru	Right	App. Total	Left	Thru	App. Total	Left	Right	App. Total	Int. Total
Peak Hour Analysis From 04:45 PM to 05:30 PM - Peak 1 of 1										
Peak Hour for Entire Intersection Begins at 04:45 PM										
04:45 PM	**2**	0	**2**	0	**3**	**3**	0	0	0	**5**
05:00 PM	0	0	0	0	2	2	0	0	0	2
05:15 PM	0	0	0	0	2	2	0	0	0	2
05:30 PM	0	0	0	0	1	1	0	0	0	1
Total Volume	2	0	2	0	8	8	0	0	0	10
% App. Total	100	0		0	100		0	0		
PHF	.250	.000	.250	.000	.667	.667	.000	.000	.000	.500

Counts Unlimited, Inc.
PO Box 1178
Corona, CA 92878
(951)268-6268

City of Rancho Cucamonga
N/S: Milliken Avenue
E/W: Azusa Court
Weather: Clear

File Name : 07_RNC_Mil_Azu Ct PM
Site Code : 00322818
Start Date : 9/20/2022
Page No : 2

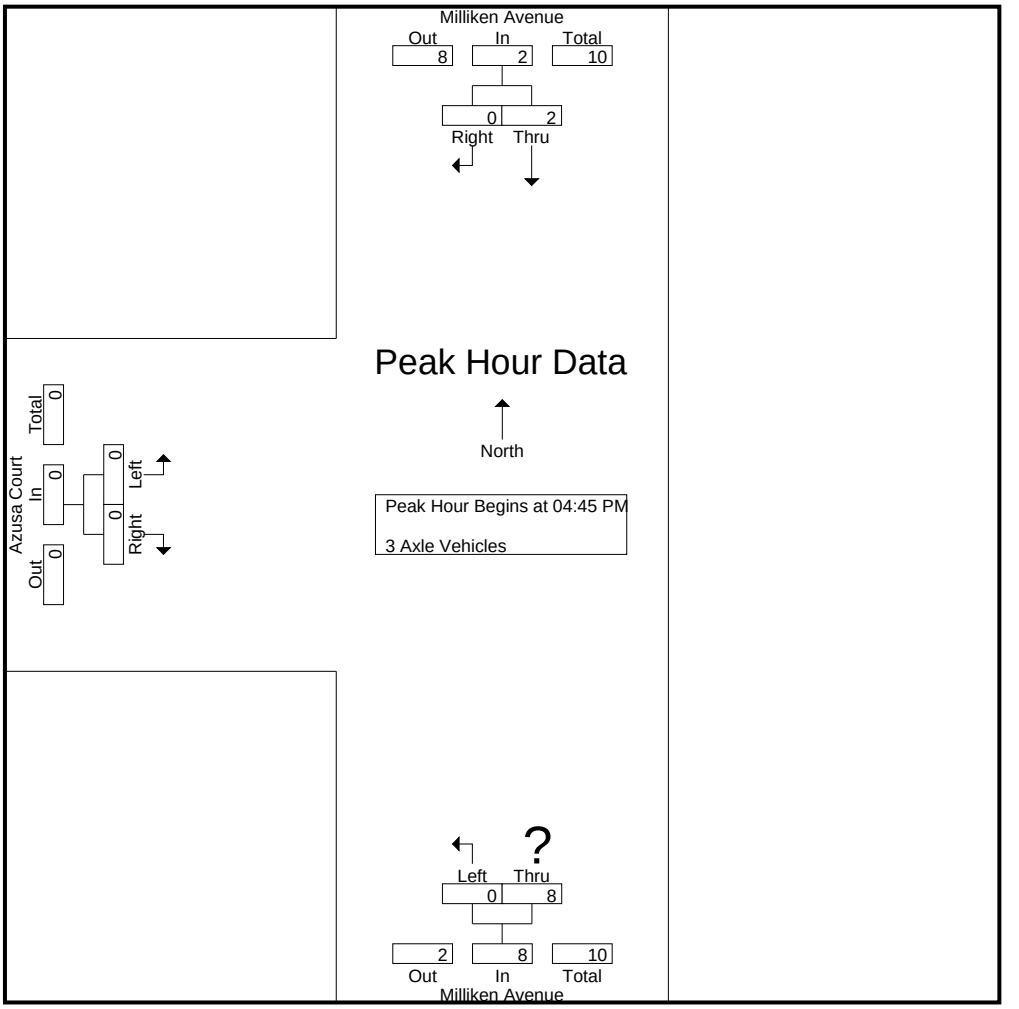

Peak Hour Analysis From 04:45 PM to 05:30 PM - Peak 1 of 1
Peak Hour for Each Approach Begins at:

	04:45 PM			04:45 PM			04:45 PM		
+0 mins.	**2**	0	**2**	0	**3**	**3**	0	0	0
+15 mins.	0	0	0	0	2	2	0	0	0
+30 mins.	0	0	0	0	2	2	0	0	0
+45 mins.	0	0	0	0	1	1	0	0	0
Total Volume	2	0	2	0	8	8	0	0	0
% App. Total	100	0		0	100		0	0	
PHF	.250	.000	.250	.000	.667	.667	.000	.000	.000

Counts Unlimited, Inc.
PO Box 1178
Corona, CA 92878
(951)268-6268

City of Rancho Cucamonga
N/S: Milliken Avenue
E/W: Azusa Court
Weather: Clear

File Name : 07_RNC_Mil_Azu Ct PM
Site Code : 00322818
Start Date : 9/20/2022
Page No : 1

Groups Printed- 4+ Axle Trucks

	Milliken Avenue Southbound			Milliken Avenue Northbound			Azusa Court Eastbound			
Start Time	Thru	Right	App. Total	Left	Thru	App. Total	Left	Right	App. Total	Int. Total
04:00 PM	11	0	11	0	8	8	0	0	0	19
04:15 PM	4	0	4	0	8	8	0	0	0	12
04:30 PM	5	0	5	0	9	9	0	0	0	14
04:45 PM	7	0	7	0	3	3	0	0	0	10
Total	27	0	27	0	28	28	0	0	0	55
05:00 PM	12	0	12	0	5	5	0	0	0	17
05:15 PM	2	0	2	0	2	2	0	0	0	4
05:30 PM	5	0	5	0	5	5	0	1	1	11
05:45 PM	1	0	1	0	6	6	0	0	0	7
Total	20	0	20	0	18	18	0	1	1	39
Grand Total	47	0	47	0	46	46	0	1	1	94
Apprch %	100	0		0	100		0	100		
Total %	50	0	50	0	48.9	48.9	0	1.1	1.1	

	Milliken Avenue Southbound			Milliken Avenue Northbound			Azusa Court Eastbound			
Start Time	Thru	Right	App. Total	Left	Thru	App. Total	Left	Right	App. Total	Int. Total
Peak Hour Analysis From 04:45 PM to 05:30 PM - Peak 1 of 1										
Peak Hour for Entire Intersection Begins at 04:45 PM										
04:45 PM	7	0	7	0	3	3	0	0	0	10
05:00 PM	**12**	0	**12**	0	**5**	**5**	0	0	0	**17**
05:15 PM	2	0	2	0	2	2	0	0	0	4
05:30 PM	5	0	5	0	5	5	0	**1**	**1**	11
Total Volume	26	0	26	0	15	15	0	1	1	42
% App. Total	100	0		0	100		0	100		
PHF	.542	.000	.542	.000	.750	.750	.000	.250	.250	.618

Counts Unlimited, Inc.
PO Box 1178
Corona, CA 92878
(951)268-6268

City of Rancho Cucamonga
N/S: Milliken Avenue
E/W: Azusa Court
Weather: Clear

File Name : 07_RNC_Mil_Azu Ct PM
Site Code : 00322818
Start Date : 9/20/2022
Page No : 2

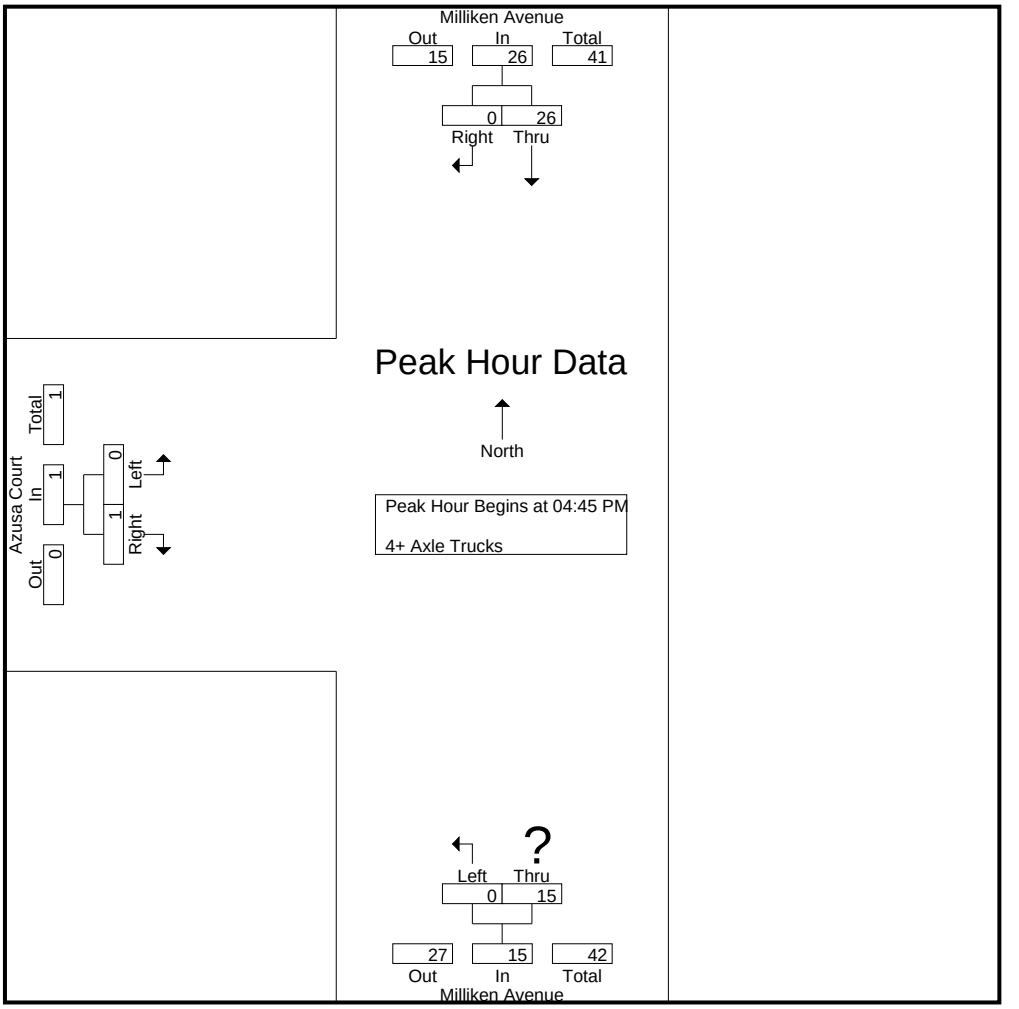

Peak Hour Analysis From 04:45 PM to 05:30 PM - Peak 1 of 1
Peak Hour for Each Approach Begins at:

	04:45 PM			04:45 PM			04:45 PM		
+0 mins.	7	0	7	0	3	3	0	0	0
+15 mins.	**12**	0	**12**	0	**5**	**5**	0	0	0
+30 mins.	2	0	2	0	2	2	0	0	0
+45 mins.	5	0	5	0	5	5	0	**1**	**1**
Total Volume	26	0	26	0	15	15	0	1	1
% App. Total	100	0		0	100		0	100	
PHF	.542	.000	.542	.000	.750	.750	.000	.250	.250

Location: Rancho Cucamonga
N/S: Milliken Avenue
E/W: Azusa Court

Date: 9/20/2022
Day: Tuesday

PEDESTRIANS

	North Leg Milliken Avenue	East Leg Dead End	South Leg Milliken Avenue	West Leg Azusa Court	
	Pedestrians	Pedestrians	Pedestrians	Pedestrians	
7:00 AM	0	0	0	0	0
7:15 AM	0	0	0	0	0
7:30 AM	0	0	0	0	0
7:45 AM	0	0	0	0	0
8:00 AM	0	0	0	0	0
8:15 AM	0	0	0	0	0
8:30 AM	0	0	0	0	0
8:45 AM	0	0	0	0	0
TOTAL VOLUMES:	0	0	0	0	0

	North Leg Milliken Avenue	East Leg Dead End	South Leg Milliken Avenue	West Leg Azusa Court	
	Pedestrians	Pedestrians	Pedestrians	Pedestrians	
4:00 PM	0	0	0	0	0
4:15 PM	1	0	0	1	2
4:30 PM	0	0	0	1	1
4:45 PM	0	0	0	1	1
5:00 PM	0	0	0	0	0
5:15 PM	0	0	0	0	0
5:30 PM	0	0	0	0	0
5:45 PM	0	0	0	0	0
TOTAL VOLUMES:	1	0	0	3	4

Counts Unlimited, Inc.
PO Box 1178
Corona, CA 92878
951-268-6268

Location: Rancho Cucamonga
N/S: Milliken Avenue
E/W: Azusa Court

Date: 9/20/2022
Day: Tuesday

BICYCLES

	Southbound Milliken Avenue			Westbound Dead End			Northbound Milliken Avenue			Eastbound Azusa Court			
	Left	Thru	Right	Left	Thru	Right	Left	Thru	Right	Left	Thru	Right	
7:00 AM	0	1	0	0	0	0	0	0	0	0	0	0	1
7:15 AM	0	0	0	0	0	0	0	0	0	0	0	0	0
7:30 AM	0	0	0	0	0	0	0	0	0	0	0	0	0
7:45 AM	0	0	0	0	0	0	0	0	0	0	0	0	0
8:00 AM	0	0	0	0	0	0	0	0	0	0	0	0	0
8:15 AM	0	1	0	0	0	0	0	0	0	0	0	0	1
8:30 AM	0	1	0	0	0	0	0	0	0	0	0	0	1
8:45 AM	0	0	0	0	0	0	0	0	0	0	0	0	0
TOTAL VOLUMES:	0	3	0	0	0	0	0	0	0	0	0	0	3

	Southbound Milliken Avenue			Westbound Dead End			Northbound Milliken Avenue			Eastbound Azusa Court			
	Left	Thru	Right	Left	Thru	Right	Left	Thru	Right	Left	Thru	Right	
4:00 PM	0	0	0	0	0	0	0	0	0	0	0	0	0
4:15 PM	0	1	0	0	0	0	0	1	0	0	0	0	2
4:30 PM	0	0	0	0	0	0	0	0	0	0	0	0	0
4:45 PM	0	0	0	0	0	0	0	2	0	1	0	0	3
5:00 PM	0	1	0	0	0	0	0	0	0	0	0	0	1
5:15 PM	0	0	0	0	0	0	0	0	0	0	0	0	0
5:30 PM	0	1	0	0	0	0	0	0	0	0	0	0	1
5:45 PM	0	0	1	0	0	0	1	2	0	0	0	0	4
TOTAL VOLUMES:	0	3	1	0	0	0	1	5	0	1	0	0	11

Counts Unlimited, Inc.
PO Box 1178
Corona, CA 92878
951-268-6268

Counts Unlimited, Inc.
PO Box 1178
Corona, CA 92878
(951)268-6268

City of Rancho Cucamonga
N/S: Milliken Avenue
E/W: 7th Street
Weather: Clear

File Name : 08_RNC_Mil_7th AM
Site Code : 00322818
Start Date : 9/20/2022
Page No : 1

Groups Printed- Passenger Vehicles - Large 2 Axle Vehicles - 3 Axle Vehicles - 4+ Axle Trucks

	Milliken Avenue Southbound				7th Street Westbound				Milliken Avenue Northbound				7th Street Eastbound				
Start Time	Left	Thru	Right	App. Total	Left	Thru	Right	App. Total	Left	Thru	Right	App. Total	Left	Thru	Right	App. Total	Int. Total
07:00 AM	6	130	0	136	1	1	1	3	15	116	1	132	5	0	3	8	279
07:15 AM	6	140	2	148	0	0	1	1	7	122	3	132	2	0	7	9	290
07:30 AM	5	238	0	243	2	0	2	4	11	141	1	153	5	0	5	10	410
07:45 AM	5	241	0	246	2	0	1	3	39	197	6	242	16	0	12	28	519
Total	22	749	2	773	5	1	5	11	72	576	11	659	28	0	27	55	1498
08:00 AM	2	252	3	257	1	0	1	2	11	160	5	176	11	0	1	12	447
08:15 AM	4	275	4	283	5	0	1	6	17	170	2	189	5	0	6	11	489
08:30 AM	4	255	0	259	1	0	2	3	28	182	11	221	9	0	3	12	495
08:45 AM	4	203	6	213	5	1	2	8	20	178	5	203	8	1	1	10	434
Total	14	985	13	1012	12	1	6	19	76	690	23	789	33	1	11	45	1865
Grand Total	36	1734	15	1785	17	2	11	30	148	1266	34	1448	61	1	38	100	3363
Apprch %	2	97.1	0.8		56.7	6.7	36.7		10.2	87.4	2.3		61	1	38		
Total %	1.1	51.6	0.4	53.1	0.5	0.1	0.3	0.9	4.4	37.6	1	43.1	1.8	0	1.1	3	
Passenger Vehicles	32	1627	15	1674	11	1	7	19	140	1170	23	1333	59	1	35	95	3121
% Passenger Vehicles	88.9	93.8	100	93.8	64.7	50	63.6	63.3	94.6	92.4	67.6	92.1	96.7	100	92.1	95	92.8
Large 2 Axle Vehicles	1	28	0	29	1	0	1	2	7	28	1	36	2	0	3	5	72
% Large 2 Axle Vehicles	2.8	1.6	0	1.6	5.9	0	9.1	6.7	4.7	2.2	2.9	2.5	3.3	0	7.9	5	2.1
3 Axle Vehicles	0	21	0	21	0	1	0	1	1	11	4	16	0	0	0	0	38
% 3 Axle Vehicles	0	1.2	0	1.2	0	50	0	3.3	0.7	0.9	11.8	1.1	0	0	0	0	1.1
4+ Axle Trucks	3	58	0	61	5	0	3	8	0	57	6	63	0	0	0	0	132
% 4+ Axle Trucks	8.3	3.3	0	3.4	29.4	0	27.3	26.7	0	4.5	17.6	4.4	0	0	0	0	3.9

	Milliken Avenue Southbound				7th Street Westbound				Milliken Avenue Northbound				7th Street Eastbound				
Start Time	Left	Thru	Right	App. Total	Left	Thru	Right	App. Total	Left	Thru	Right	App. Total	Left	Thru	Right	App. Total	Int. Total
Peak Hour Analysis From 07:00 AM to 08:45 AM - Peak 1 of 1																	
Peak Hour for Entire Intersection Begins at 07:45 AM																	
07:45 AM	**5**	241	0	246	2	0	1	3	**39**	**197**	6	**242**	**16**	0	**12**	**28**	**519**
08:00 AM	2	252	3	257	1	0	1	2	11	160	5	176	11	0	1	12	447
08:15 AM	4	**275**	**4**	**283**	**5**	0	1	**6**	17	170	2	189	5	0	6	11	489
08:30 AM	4	255	0	259	1	0	**2**	3	28	182	**11**	221	9	0	3	12	495
Total Volume	15	1023	7	1045	9	0	5	14	95	709	24	828	41	0	22	63	1950
% App. Total	1.4	97.9	0.7		64.3	0	35.7		11.5	85.6	2.9		65.1	0	34.9		
PHF	.750	.930	.438	.923	.450	.000	.625	.583	.609	.900	.545	.855	.641	.000	.458	.563	.939

Counts Unlimited, Inc.
PO Box 1178
Corona, CA 92878
(951)268-6268

City of Rancho Cucamonga
N/S: Milliken Avenue
E/W: 7th Street
Weather: Clear

File Name : 08_RNC_Mil_7th AM
Site Code : 00322818
Start Date : 9/20/2022
Page No : 2

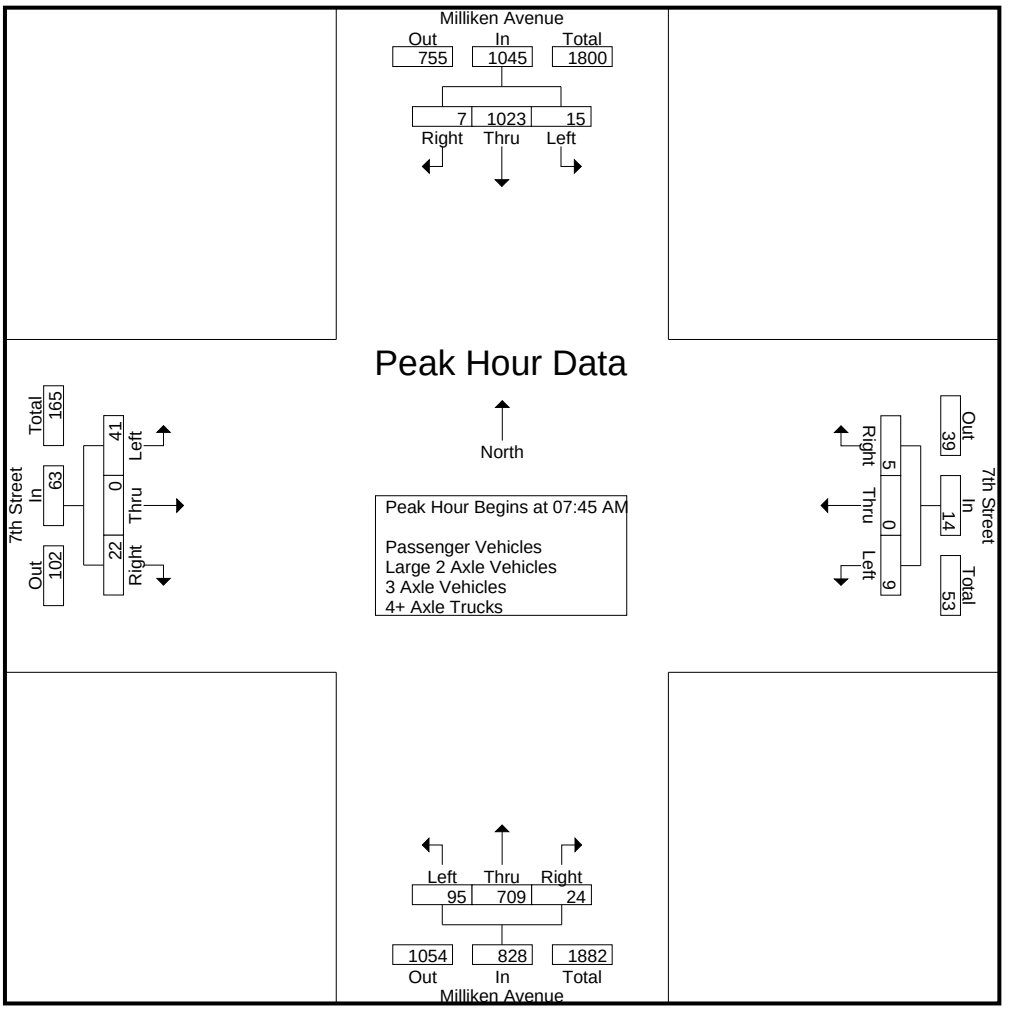

Peak Hour Analysis From 07:00 AM to 08:45 AM - Peak 1 of 1
Peak Hour for Each Approach Begins at:

	07:45 AM				08:00 AM				07:45 AM				07:45 AM			
+0 mins.	**5**	241	0	246	1	0	1	2	**39**	**197**	6	**242**	**16**	0	**12**	**28**
+15 mins.	2	252	3	257	**5**	0	1	6	11	160	5	176	11	0	1	12
+30 mins.	4	**275**	**4**	**283**	1	0	**2**	3	17	170	2	189	5	0	6	11
+45 mins.	4	255	0	259	5	**1**	2	**8**	28	182	**11**	221	9	0	3	12
Total Volume	15	1023	7	1045	12	1	6	19	95	709	24	828	41	0	22	63
% App. Total	1.4	97.9	0.7		63.2	5.3	31.6		11.5	85.6	2.9		65.1	0	34.9	
PHF	.750	.930	.438	.923	.600	.250	.750	.594	.609	.900	.545	.855	.641	.000	.458	.563

Counts Unlimited, Inc.
PO Box 1178
Corona, CA 92878
(951)268-6268

City of Rancho Cucamonga
N/S: Milliken Avenue
E/W: 7th Street
Weather: Clear

File Name : 08_RNC_Mil_7th AM
Site Code : 00322818
Start Date : 9/20/2022
Page No : 1

Groups Printed- Passenger Vehicles

	Milliken Avenue Southbound				7th Street Westbound				Milliken Avenue Northbound				7th Street Eastbound				
Start Time	Left	Thru	Right	App. Total	Left	Thru	Right	App. Total	Left	Thru	Right	App. Total	Left	Thru	Right	App. Total	Int. Total
07:00 AM	6	117	0	123	0	1	1	2	15	104	1	120	5	0	3	8	253
07:15 AM	5	131	2	138	0	0	1	1	6	114	2	122	2	0	7	9	270
07:30 AM	3	221	0	224	1	0	1	2	9	132	1	142	5	0	4	9	377
07:45 AM	5	228	0	233	2	0	1	3	36	189	4	229	15	0	12	27	492
Total	19	697	2	718	3	1	4	8	66	539	8	613	27	0	26	53	1392
08:00 AM	2	242	3	247	1	0	1	2	11	147	1	159	10	0	1	11	419
08:15 AM	3	259	4	266	5	0	0	5	16	161	1	178	5	0	5	10	459
08:30 AM	4	239	0	243	0	0	1	1	28	164	8	200	9	0	2	11	455
08:45 AM	4	190	6	200	2	0	1	3	19	159	5	183	8	1	1	10	396
Total	13	930	13	956	8	0	3	11	74	631	15	720	32	1	9	42	1729
Grand Total	32	1627	15	1674	11	1	7	19	140	1170	23	1333	59	1	35	95	3121
Apprch %	1.9	97.2	0.9		57.9	5.3	36.8		10.5	87.8	1.7		62.1	1.1	36.8		
Total %	1	52.1	0.5	53.6	0.4	0	0.2	0.6	4.5	37.5	0.7	42.7	1.9	0	1.1	3	

	Milliken Avenue Southbound				7th Street Westbound				Milliken Avenue Northbound				7th Street Eastbound				
Start Time	Left	Thru	Right	App. Total	Left	Thru	Right	App. Total	Left	Thru	Right	App. Total	Left	Thru	Right	App. Total	Int. Total
Peak Hour Analysis From 07:45 AM to 08:30 AM - Peak 1 of 1																	
Peak Hour for Entire Intersection Begins at 07:45 AM																	
07:45 AM	**5**	228	0	233	2	0	**1**	3	**36**	**189**	4	**229**	**15**	0	**12**	**27**	**492**
08:00 AM	2	242	3	247	1	0	1	2	11	147	1	159	10	0	1	11	419
08:15 AM	3	**259**	**4**	**266**	**5**	0	0	**5**	16	161	1	178	5	0	5	10	459
08:30 AM	4	239	0	243	0	0	1	1	28	164	**8**	200	9	0	2	11	455
Total Volume	14	968	7	989	8	0	3	11	91	661	14	766	39	0	20	59	1825
% App. Total	1.4	97.9	0.7		72.7	0	27.3		11.9	86.3	1.8		66.1	0	33.9		
PHF	.700	.934	.438	.930	.400	.000	.750	.550	.632	.874	.438	.836	.650	.000	.417	.546	.927

Counts Unlimited, Inc.
PO Box 1178
Corona, CA 92878
(951)268-6268

City of Rancho Cucamonga
N/S: Milliken Avenue
E/W: 7th Street
Weather: Clear

File Name : 08_RNC_Mil_7th AM
Site Code : 00322818
Start Date : 9/20/2022
Page No : 2

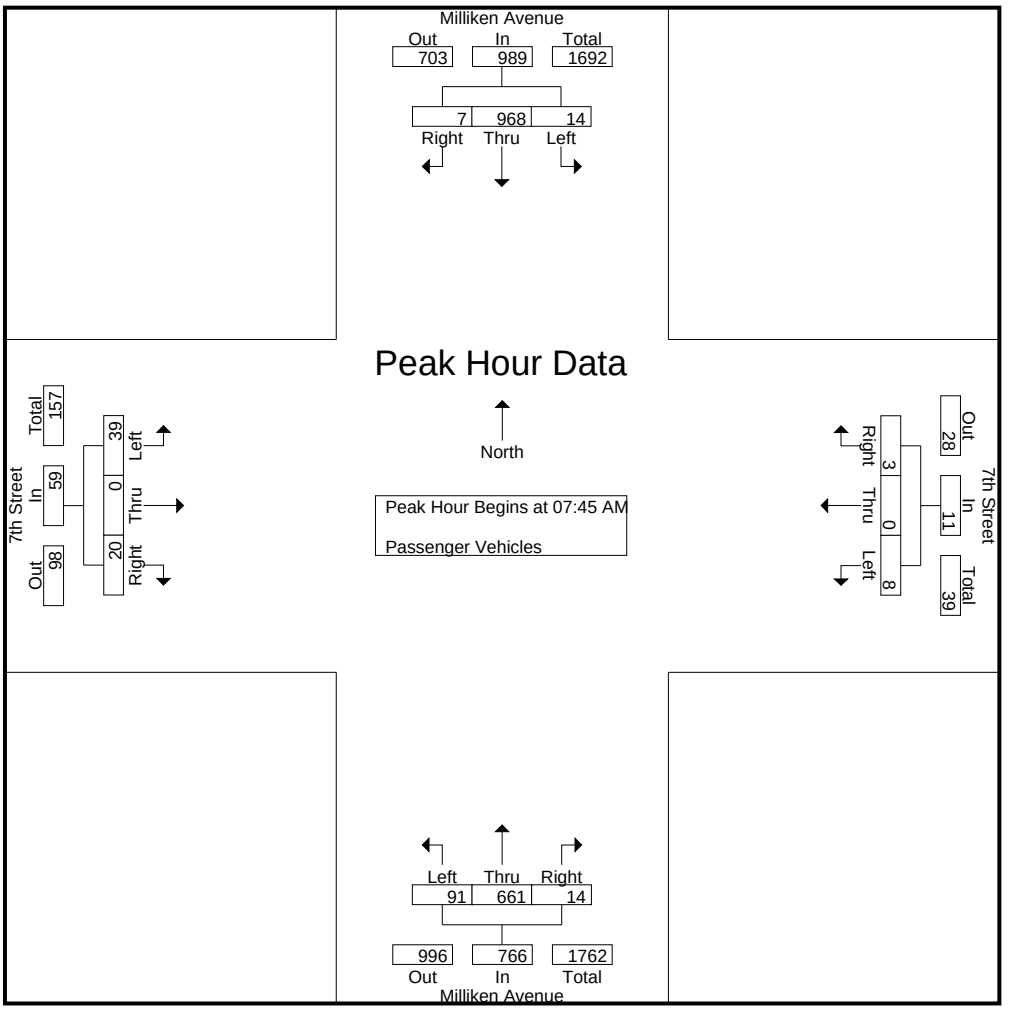

Peak Hour Analysis From 07:45 AM to 08:30 AM - Peak 1 of 1
Peak Hour for Each Approach Begins at:

	07:45 AM				07:45 AM				07:45 AM				07:45 AM			
+0 mins.	**5**	228	0	233	2	0	**1**	3	**36**	**189**	4	**229**	**15**	0	**12**	**27**
+15 mins.	2	242	3	247	1	0	1	2	11	147	1	159	10	0	1	11
+30 mins.	3	**259**	**4**	**266**	**5**	0	0	**5**	16	161	1	178	5	0	5	10
+45 mins.	4	239	0	243	0	0	1	1	28	164	**8**	200	9	0	2	11
Total Volume	14	968	7	989	8	0	3	11	91	661	14	766	39	0	20	59
% App. Total	1.4	97.9	0.7		72.7	0	27.3		11.9	86.3	1.8		66.1	0	33.9	
PHF	.700	.934	.438	.930	.400	.000	.750	.550	.632	.874	.438	.836	.650	.000	.417	.546

Counts Unlimited, Inc.
PO Box 1178
Corona, CA 92878
(951)268-6268

City of Rancho Cucamonga
N/S: Milliken Avenue
E/W: 7th Street
Weather: Clear

File Name : 08_RNC_Mil_7th AM
Site Code : 00322818
Start Date : 9/20/2022
Page No : 1

Groups Printed- Large 2 Axle Vehicles

	Milliken Avenue Southbound				7th Street Westbound				Milliken Avenue Northbound				7th Street Eastbound				
Start Time	Left	Thru	Right	App. Total	Left	Thru	Right	App. Total	Left	Thru	Right	App. Total	Left	Thru	Right	App. Total	Int. Total
07:00 AM	0	6	0	6	0	0	0	0	0	7	0	7	0	0	0	0	13
07:15 AM	0	2	0	2	0	0	0	0	1	2	0	3	0	0	0	0	5
07:30 AM	0	8	0	8	0	0	0	0	2	3	0	5	0	0	1	1	14
07:45 AM	0	2	0	2	0	0	0	0	2	2	0	4	1	0	0	1	7
Total	0	18	0	18	0	0	0	0	5	14	0	19	1	0	1	2	39
08:00 AM	0	2	0	2	0	0	0	0	0	2	0	2	1	0	0	1	5
08:15 AM	1	2	0	3	0	0	0	0	1	1	0	2	0	0	1	1	6
08:30 AM	0	4	0	4	0	0	0	0	0	7	1	8	0	0	1	1	13
08:45 AM	0	2	0	2	1	0	1	2	1	4	0	5	0	0	0	0	9
Total	1	10	0	11	1	0	1	2	2	14	1	17	1	0	2	3	33
Grand Total	1	28	0	29	1	0	1	2	7	28	1	36	2	0	3	5	72
Apprch %	3.4	96.6	0		50	0	50		19.4	77.8	2.8		40	0	60		
Total %	1.4	38.9	0	40.3	1.4	0	1.4	2.8	9.7	38.9	1.4	50	2.8	0	4.2	6.9	

	Milliken Avenue Southbound				7th Street Westbound				Milliken Avenue Northbound				7th Street Eastbound				
Start Time	Left	Thru	Right	App. Total	Left	Thru	Right	App. Total	Left	Thru	Right	App. Total	Left	Thru	Right	App. Total	Int. Total
Peak Hour Analysis From 07:45 AM to 08:30 AM - Peak 1 of 1																	
Peak Hour for Entire Intersection Begins at 07:45 AM																	
07:45 AM	0	2	0	2	0	0	0	0	**2**	2	0	4	**1**	0	0	**1**	7
08:00 AM	0	2	0	2	0	0	0	0	0	2	0	2	1	0	0	1	5
08:15 AM	**1**	2	0	3	0	0	0	0	1	1	0	2	0	0	**1**	1	6
08:30 AM	0	**4**	0	**4**	0	0	0	0	0	**7**	**1**	**8**	0	0	1	1	**13**
Total Volume	1	10	0	11	0	0	0	0	3	12	1	16	2	0	2	4	31
% App. Total	9.1	90.9	0		0	0	0		18.8	75	6.2		50	0	50		
PHF	.250	.625	.000	.688	.000	.000	.000	.000	.375	.429	.250	.500	.500	.000	.500	1.00	.596

Counts Unlimited, Inc.
PO Box 1178
Corona, CA 92878
(951)268-6268

City of Rancho Cucamonga
N/S: Milliken Avenue
E/W: 7th Street
Weather: Clear

File Name : 08_RNC_Mil_7th AM
Site Code : 00322818
Start Date : 9/20/2022
Page No : 2

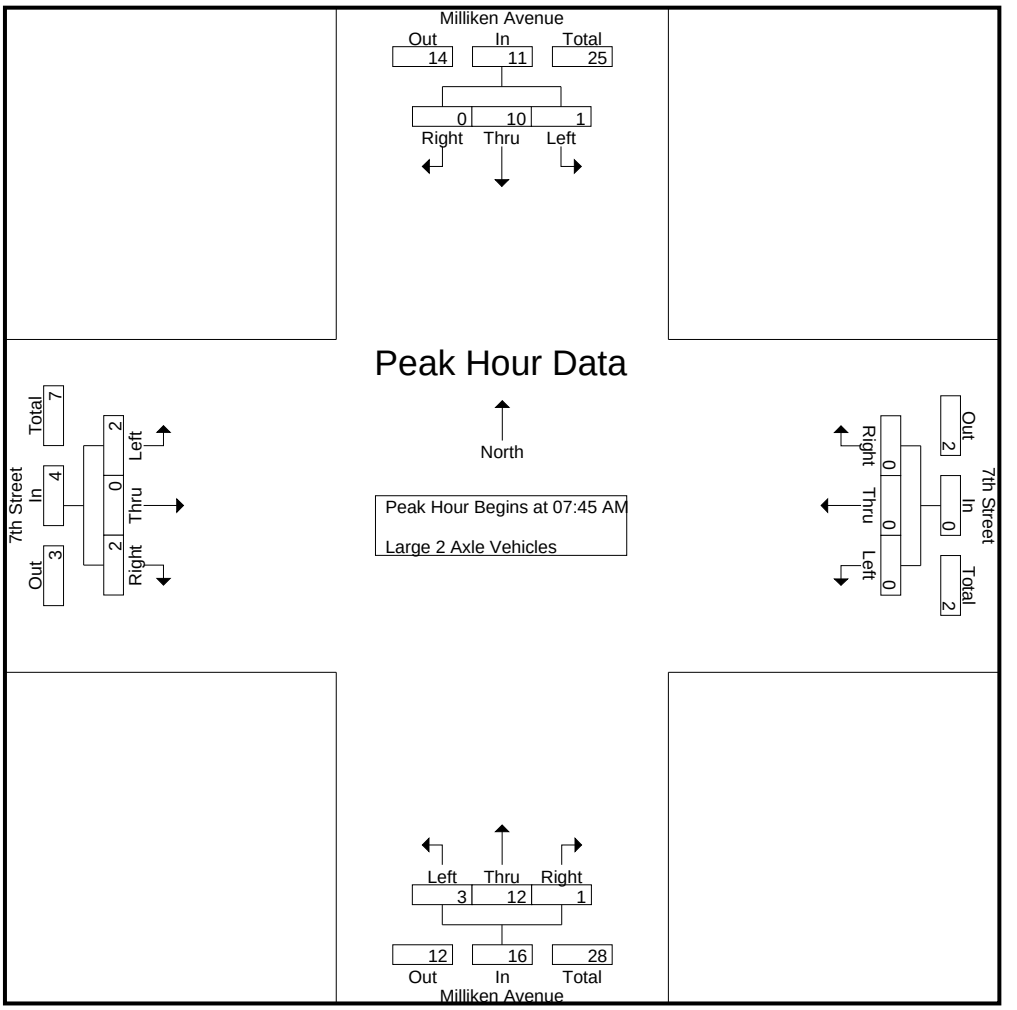

Peak Hour Analysis From 07:45 AM to 08:30 AM - Peak 1 of 1
Peak Hour for Each Approach Begins at:

	07:45 AM				07:45 AM				07:45 AM				07:45 AM			
+0 mins.	0	2	0	2	0	0	0	0	**2**	2	0	4	**1**	0	0	**1**
+15 mins.	0	2	0	2	0	0	0	0	0	2	0	2	1	0	0	1
+30 mins.	**1**	2	0	3	0	0	0	0	1	1	0	2	0	0	**1**	1
+45 mins.	0	**4**	0	**4**	0	0	0	0	0	**7**	**1**	**8**	0	0	1	1
Total Volume	1	10	0	11	0	0	0	0	3	12	1	16	2	0	2	4
% App. Total	9.1	90.9	0		0	0	0		18.8	75	6.2		50	0	50	
PHF	.250	.625	.000	.688	.000	.000	.000	.000	.375	.429	.250	.500	.500	.000	.500	1.000

Counts Unlimited, Inc.
PO Box 1178
Corona, CA 92878
(951)268-6268

City of Rancho Cucamonga
N/S: Milliken Avenue
E/W: 7th Street
Weather: Clear

File Name : 08_RNC_Mil_7th AM
Site Code : 00322818
Start Date : 9/20/2022
Page No : 1

Groups Printed- 3 Axle Vehicles

	Milliken Avenue Southbound				7th Street Westbound				Milliken Avenue Northbound				7th Street Eastbound				
Start Time	Left	Thru	Right	App. Total	Left	Thru	Right	App. Total	Left	Thru	Right	App. Total	Left	Thru	Right	App. Total	Int. Total
07:00 AM	0	1	0	1	0	0	0	0	0	1	0	1	0	0	0	0	2
07:15 AM	0	2	0	2	0	0	0	0	0	0	1	1	0	0	0	0	3
07:30 AM	0	4	0	4	0	0	0	0	0	1	0	1	0	0	0	0	5
07:45 AM	0	3	0	3	0	0	0	0	1	1	1	3	0	0	0	0	6
Total	0	10	0	10	0	0	0	0	1	3	2	6	0	0	0	0	16
08:00 AM	0	1	0	1	0	0	0	0	0	2	1	3	0	0	0	0	4
08:15 AM	0	3	0	3	0	0	0	0	0	4	0	4	0	0	0	0	7
08:30 AM	0	5	0	5	0	0	0	0	0	1	1	2	0	0	0	0	7
08:45 AM	0	2	0	2	0	1	0	1	0	1	0	1	0	0	0	0	4
Total	0	11	0	11	0	1	0	1	0	8	2	10	0	0	0	0	22
Grand Total	0	21	0	21	0	1	0	1	1	11	4	16	0	0	0	0	38
Apprch %	0	100	0		0	100	0		6.2	68.8	25		0	0	0		
Total %	0	55.3	0	55.3	0	2.6	0	2.6	2.6	28.9	10.5	42.1	0	0	0	0	

	Milliken Avenue Southbound				7th Street Westbound				Milliken Avenue Northbound				7th Street Eastbound				
Start Time	Left	Thru	Right	App. Total	Left	Thru	Right	App. Total	Left	Thru	Right	App. Total	Left	Thru	Right	App. Total	Int. Total
Peak Hour Analysis From 07:45 AM to 08:30 AM - Peak 1 of 1																	
Peak Hour for Entire Intersection Begins at 07:45 AM																	
07:45 AM	0	3	0	3	0	0	0	0	**1**	1	**1**	3	0	0	0	0	6
08:00 AM	0	1	0	1	0	0	0	0	0	2	1	3	0	0	0	0	4
08:15 AM	0	3	0	3	0	0	0	0	0	**4**	0	**4**	0	0	0	0	**7**
08:30 AM	0	**5**	0	**5**	0	0	0	0	0	1	1	2	0	0	0	0	7
Total Volume	0	12	0	12	0	0	0	0	1	8	3	12	0	0	0	0	24
% App. Total	0	100	0		0	0	0		8.3	66.7	25		0	0	0		
PHF	.000	.600	.000	.600	.000	.000	.000	.000	.250	.500	.750	.750	.000	.000	.000	.000	.857

Counts Unlimited, Inc.
PO Box 1178
Corona, CA 92878
(951)268-6268

City of Rancho Cucamonga
N/S: Milliken Avenue
E/W: 7th Street
Weather: Clear

File Name : 08_RNC_Mil_7th AM
Site Code : 00322818
Start Date : 9/20/2022
Page No : 2

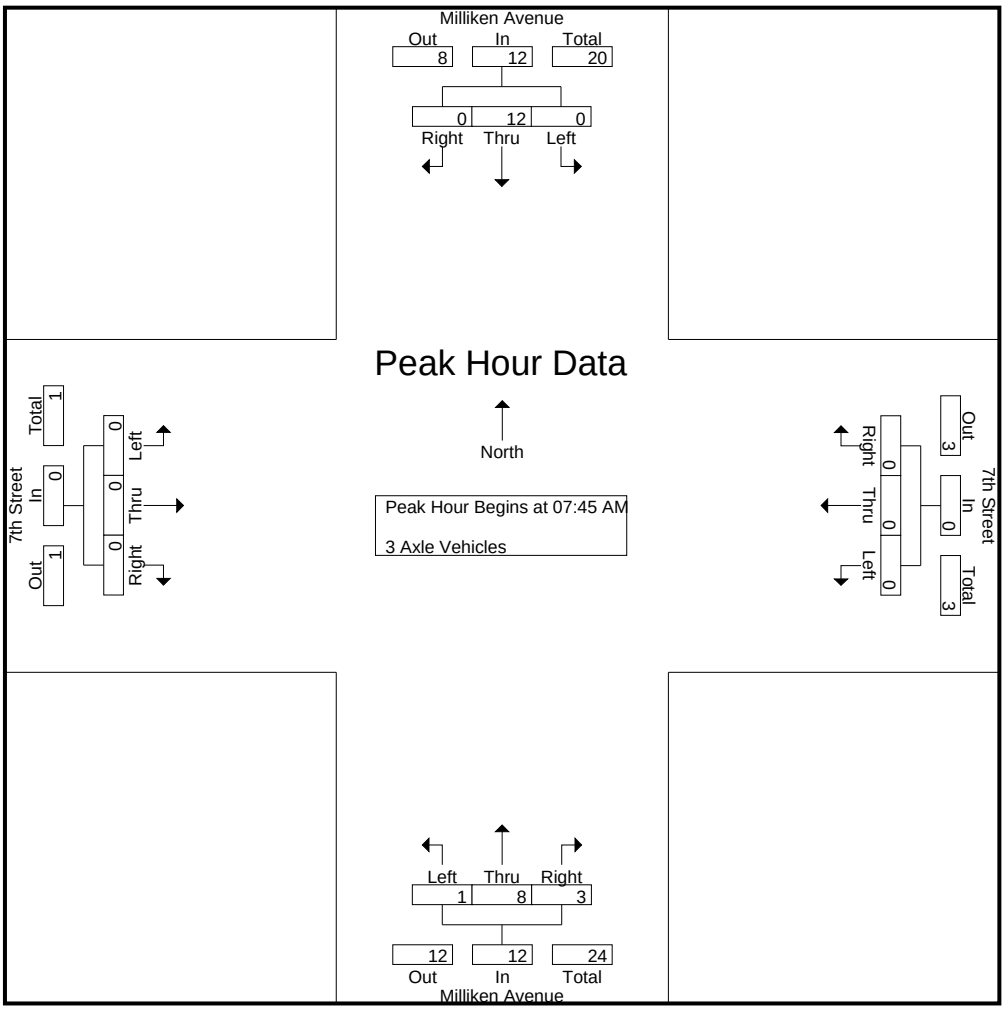

Peak Hour Analysis From 07:45 AM to 08:30 AM - Peak 1 of 1
Peak Hour for Each Approach Begins at:

	07:45 AM				07:45 AM				07:45 AM				07:45 AM			
+0 mins.	0	3	0	3	0	0	0	0	**1**	1	**1**	3	0	0	0	0
+15 mins.	0	1	0	1	0	0	0	0	0	2	1	3	0	0	0	0
+30 mins.	0	3	0	3	0	0	0	0	0	**4**	0	**4**	0	0	0	0
+45 mins.	0	**5**	0	**5**	0	0	0	0	0	1	1	2	0	0	0	0
Total Volume	0	12	0	12	0	0	0	0	1	8	3	12	0	0	0	0
% App. Total	0	100	0		0	0	0		8.3	66.7	25		0	0	0	
PHF	.000	.600	.000	.600	.000	.000	.000	.000	.250	.500	.750	.750	.000	.000	.000	.000

Counts Unlimited, Inc.
PO Box 1178
Corona, CA 92878
(951)268-6268

City of Rancho Cucamonga
N/S: Milliken Avenue
E/W: 7th Street
Weather: Clear

File Name : 08_RNC_Mil_7th AM
Site Code : 00322818
Start Date : 9/20/2022
Page No : 1

Groups Printed- 4+ Axle Trucks

	Milliken Avenue Southbound				7th Street Westbound				Milliken Avenue Northbound				7th Street Eastbound				
Start Time	Left	Thru	Right	App. Total	Left	Thru	Right	App. Total	Left	Thru	Right	App. Total	Left	Thru	Right	App. Total	Int. Total
07:00 AM	0	6	0	6	1	0	0	1	0	4	0	4	0	0	0	0	11
07:15 AM	1	5	0	6	0	0	0	0	0	6	0	6	0	0	0	0	12
07:30 AM	2	5	0	7	1	0	1	2	0	5	0	5	0	0	0	0	14
07:45 AM	0	8	0	8	0	0	0	0	0	5	1	6	0	0	0	0	14
Total	3	24	0	27	2	0	1	3	0	20	1	21	0	0	0	0	51
08:00 AM	0	7	0	7	0	0	0	0	0	9	3	12	0	0	0	0	19
08:15 AM	0	11	0	11	0	0	1	1	0	4	1	5	0	0	0	0	17
08:30 AM	0	7	0	7	1	0	1	2	0	10	1	11	0	0	0	0	20
08:45 AM	0	9	0	9	2	0	0	2	0	14	0	14	0	0	0	0	25
Total	0	34	0	34	3	0	2	5	0	37	5	42	0	0	0	0	81
Grand Total	3	58	0	61	5	0	3	8	0	57	6	63	0	0	0	0	132
Apprch %	4.9	95.1	0		62.5	0	37.5		0	90.5	9.5		0	0	0		
Total %	2.3	43.9	0	46.2	3.8	0	2.3	6.1	0	43.2	4.5	47.7	0	0	0	0	

	Milliken Avenue Southbound				7th Street Westbound				Milliken Avenue Northbound				7th Street Eastbound				
Start Time	Left	Thru	Right	App. Total	Left	Thru	Right	App. Total	Left	Thru	Right	App. Total	Left	Thru	Right	App. Total	Int. Total
Peak Hour Analysis From 07:45 AM to 08:30 AM - Peak 1 of 1																	
Peak Hour for Entire Intersection Begins at 07:45 AM																	
07:45 AM	0	8	0	8	0	0	0	0	0	5	1	6	0	0	0	0	14
08:00 AM	0	7	0	7	0	0	0	0	0	9	**3**	**12**	0	0	0	0	19
08:15 AM	0	**11**	0	**11**	0	0	**1**	1	0	4	1	5	0	0	0	0	17
08:30 AM	0	7	0	7	**1**	0	1	**2**	0	**10**	1	11	0	0	0	0	**20**
Total Volume	0	33	0	33	1	0	2	3	0	28	6	34	0	0	0	0	70
% App. Total	0	100	0		33.3	0	66.7		0	82.4	17.6		0	0	0		
PHF	.000	.750	.000	.750	.250	.000	.500	.375	.000	.700	.500	.708	.000	.000	.000	.000	.875

Counts Unlimited, Inc.
PO Box 1178
Corona, CA 92878
(951)268-6268

City of Rancho Cucamonga
N/S: Milliken Avenue
E/W: 7th Street
Weather: Clear

File Name : 08_RNC_Mil_7th AM
Site Code : 00322818
Start Date : 9/20/2022
Page No : 2

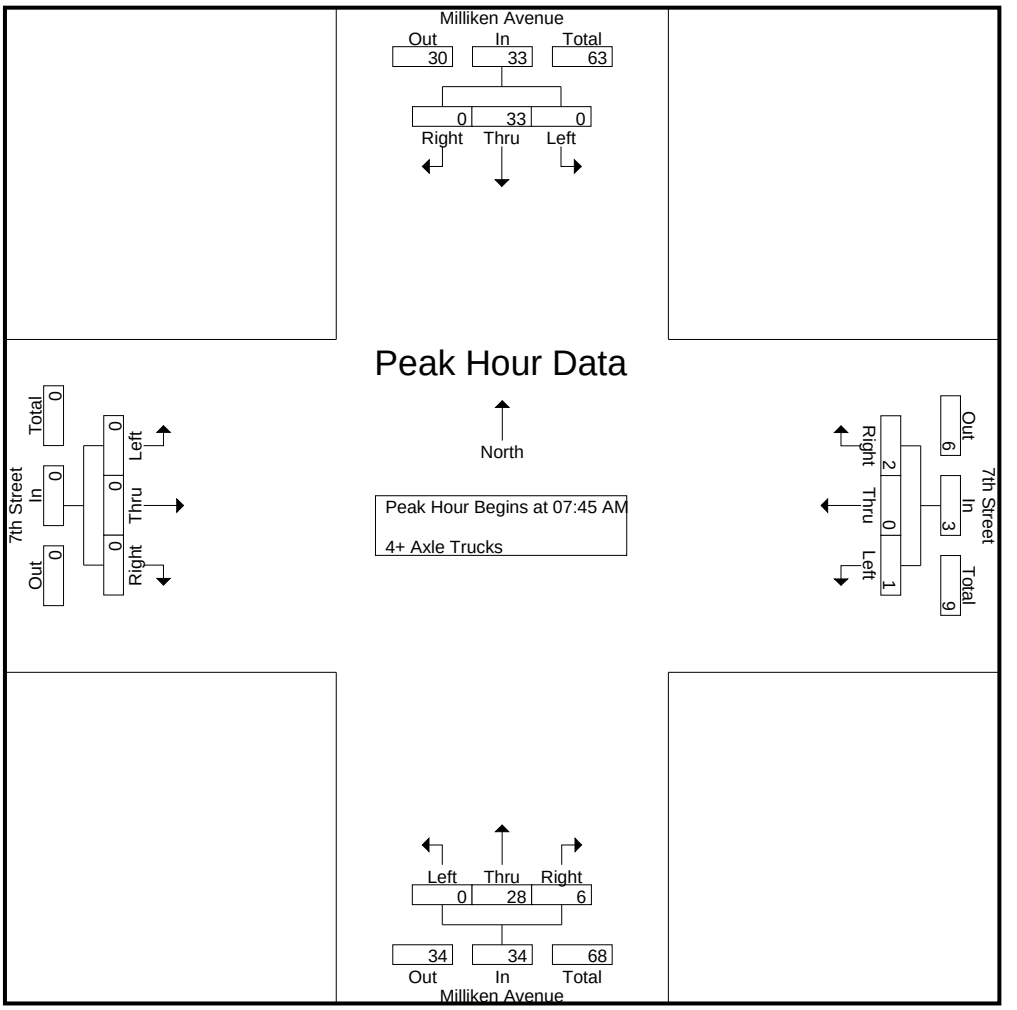

Peak Hour Analysis From 07:45 AM to 08:30 AM - Peak 1 of 1
Peak Hour for Each Approach Begins at:

	07:45 AM				07:45 AM				07:45 AM				07:45 AM			
+0 mins.	0	8	0	8	0	0	0	0	0	5	1	6	0	0	0	0
+15 mins.	0	7	0	7	0	0	0	0	0	9	**3**	**12**	0	0	0	0
+30 mins.	0	**11**	0	**11**	0	0	**1**	1	0	4	1	5	0	0	0	0
+45 mins.	0	7	0	7	**1**	0	1	**2**	0	**10**	1	11	0	0	0	0
Total Volume	0	33	0	33	1	0	2	3	0	28	6	34	0	0	0	0
% App. Total	0	100	0		33.3	0	66.7		0	82.4	17.6		0	0	0	
PHF	.000	.750	.000	.750	.250	.000	.500	.375	.000	.700	.500	.708	.000	.000	.000	.000

Counts Unlimited, Inc.
PO Box 1178
Corona, CA 92878
(951)268-6268

City of Rancho Cucamonga
N/S: Milliken Avenue
E/W: 7th Street
Weather: Clear

File Name : 08_RNC_Mil_7th PM
Site Code : 00322818
Start Date : 9/20/2022
Page No : 1

Groups Printed- Passenger Vehicles - Large 2 Axle Vehicles - 3 Axle Vehicles - 4+ Axle Trucks

	Milliken Avenue Southbound				7th Street Westbound				Milliken Avenue Northbound				7th Street Eastbound				
Start Time	Left	Thru	Right	App. Total	Left	Thru	Right	App. Total	Left	Thru	Right	App. Total	Left	Thru	Right	App. Total	Int. Total
04:00 PM	3	203	1	207	6	0	9	15	15	397	1	413	11	0	15	26	661
04:15 PM	2	234	2	238	2	0	4	6	16	363	1	380	16	0	17	33	657
04:30 PM	1	221	1	223	8	1	7	16	15	379	4	398	10	0	16	26	663
04:45 PM	7	239	1	247	6	0	9	15	20	358	1	379	45	1	20	66	707
Total	13	897	5	915	22	1	29	52	66	1497	7	1570	82	1	68	151	2688
05:00 PM	3	237	1	241	10	0	10	20	16	427	0	443	31	0	23	54	758
05:15 PM	2	237	2	241	0	1	1	2	18	450	0	468	37	0	19	56	767
05:30 PM	2	197	0	199	7	0	4	11	16	392	1	409	17	1	8	26	645
05:45 PM	2	169	1	172	1	0	7	8	26	360	0	386	9	0	8	17	583
Total	9	840	4	853	18	1	22	41	76	1629	1	1706	94	1	58	153	2753
Grand Total	22	1737	9	1768	40	2	51	93	142	3126	8	3276	176	2	126	304	5441
Apprch %	1.2	98.2	0.5		43	2.2	54.8		4.3	95.4	0.2		57.9	0.7	41.4		
Total %	0.4	31.9	0.2	32.5	0.7	0	0.9	1.7	2.6	57.5	0.1	60.2	3.2	0	2.3	5.6	
Passenger Vehicles	21	1667	8	1696	36	1	49	86	139	3041	6	3186	174	1	122	297	5265
% Passenger Vehicles	95.5	96	88.9	95.9	90	50	96.1	92.5	97.9	97.3	75	97.3	98.9	50	96.8	97.7	96.8
Large 2 Axle Vehicles	1	20	0	21	3	1	0	4	3	21	1	25	2	1	4	7	57
% Large 2 Axle Vehicles	4.5	1.2	0	1.2	7.5	50	0	4.3	2.1	0.7	12.5	0.8	1.1	50	3.2	2.3	1
3 Axle Vehicles	0	9	0	9	0	0	0	0	0	19	0	19	0	0	0	0	28
% 3 Axle Vehicles	0	0.5	0	0.5	0	0	0	0	0	0.6	0	0.6	0	0	0	0	0.5
4+ Axle Trucks	0	41	1	42	1	0	2	3	0	45	1	46	0	0	0	0	91
% 4+ Axle Trucks	0	2.4	11.1	2.4	2.5	0	3.9	3.2	0	1.4	12.5	1.4	0	0	0	0	1.7

	Milliken Avenue Southbound				7th Street Westbound				Milliken Avenue Northbound				7th Street Eastbound				
Start Time	Left	Thru	Right	App. Total	Left	Thru	Right	App. Total	Left	Thru	Right	App. Total	Left	Thru	Right	App. Total	Int. Total
Peak Hour Analysis From 04:00 PM to 05:45 PM - Peak 1 of 1																	
Peak Hour for Entire Intersection Begins at 04:30 PM																	
04:30 PM	1	221	1	223	8	**1**	7	16	15	379	**4**	398	10	0	16	26	663
04:45 PM	**7**	**239**	1	**247**	6	0	9	15	**20**	358	1	379	**45**	**1**	20	**66**	707
05:00 PM	3	237	1	241	**10**	0	**10**	**20**	16	427	0	443	31	0	**23**	54	758
05:15 PM	2	237	**2**	241	0	1	1	2	18	**450**	0	**468**	37	0	19	56	**767**
Total Volume	13	934	5	952	24	2	27	53	69	1614	5	1688	123	1	78	202	2895
% App. Total	1.4	98.1	0.5		45.3	3.8	50.9		4.1	95.6	0.3		60.9	0.5	38.6		
PHF	.464	.977	.625	.964	.600	.500	.675	.663	.863	.897	.313	.902	.683	.250	.848	.765	.944

Counts Unlimited, Inc.
PO Box 1178
Corona, CA 92878
(951)268-6268

City of Rancho Cucamonga
N/S: Milliken Avenue
E/W: 7th Street
Weather: Clear

File Name : 08_RNC_Mil_7th PM
Site Code : 00322818
Start Date : 9/20/2022
Page No : 2

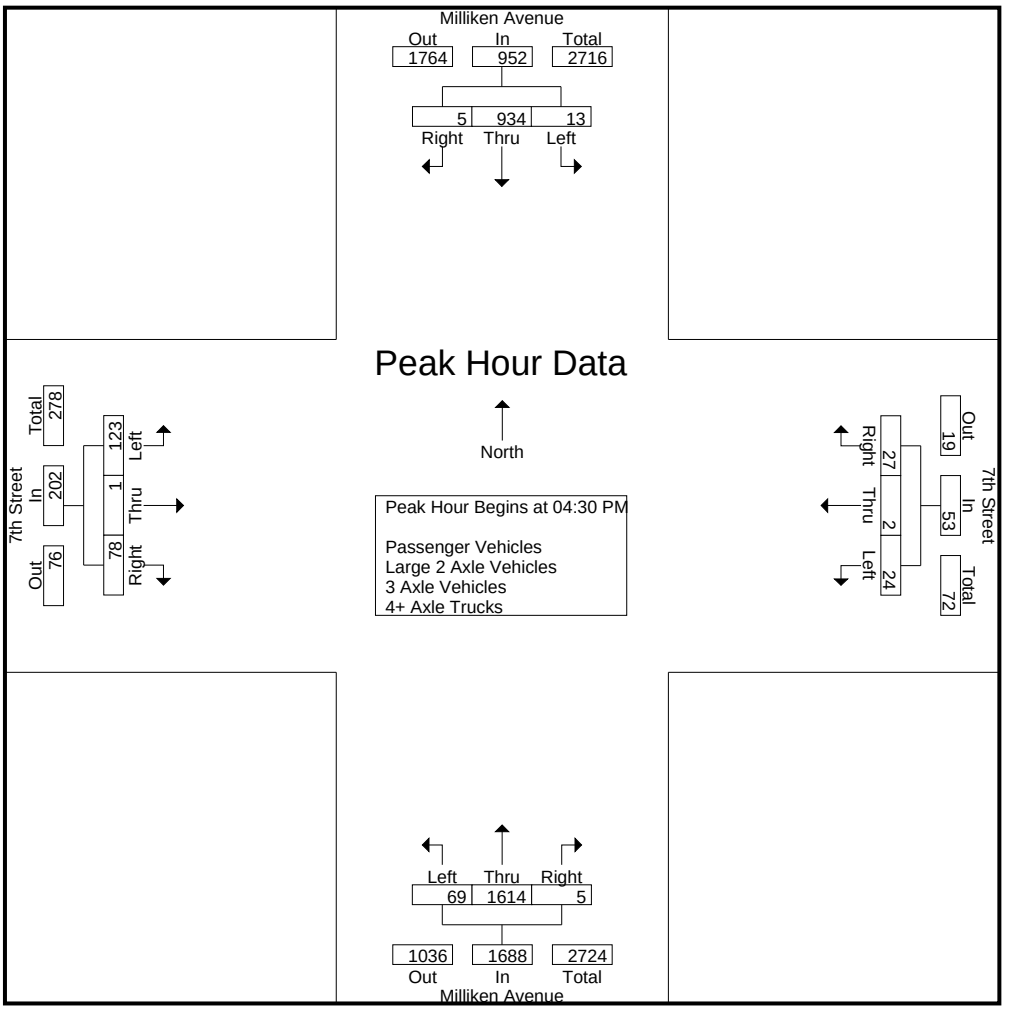

Peak Hour Analysis From 04:00 PM to 05:45 PM - Peak 1 of 1
Peak Hour for Each Approach Begins at:

	04:30 PM				04:15 PM				05:00 PM				04:30 PM			
+0 mins.	1	221	1	223	2	0	4	6	16	427	0	443	10	0	16	26
+15 mins.	**7**	**239**	1	**247**	8	**1**	7	16	18	**450**	0	**468**	**45**	**1**	20	**66**
+30 mins.	3	237	1	241	6	0	9	15	16	392	**1**	409	31	0	**23**	54
+45 mins.	2	237	**2**	241	**10**	0	**10**	**20**	**26**	360	0	386	37	0	19	56
Total Volume	13	934	5	952	26	1	30	57	76	1629	1	1706	123	1	78	202
% App. Total	1.4	98.1	0.5		45.6	1.8	52.6		4.5	95.5	0.1		60.9	0.5	38.6	
PHF	.464	.977	.625	.964	.650	.250	.750	.713	.731	.905	.250	.911	.683	.250	.848	.765

Counts Unlimited, Inc.
PO Box 1178
Corona, CA 92878
(951)268-6268

City of Rancho Cucamonga
N/S: Milliken Avenue
E/W: 7th Street
Weather: Clear

File Name : 08_RNC_Mil_7th PM
Site Code : 00322818
Start Date : 9/20/2022
Page No : 1

Groups Printed- Passenger Vehicles

	Milliken Avenue Southbound				7th Street Westbound				Milliken Avenue Northbound				7th Street Eastbound				
Start Time	Left	Thru	Right	App. Total	Left	Thru	Right	App. Total	Left	Thru	Right	App. Total	Left	Thru	Right	App. Total	Int. Total
04:00 PM	3	190	1	194	6	0	9	15	14	384	1	399	11	0	15	26	634
04:15 PM	2	228	2	232	2	0	3	5	16	352	1	369	15	0	16	31	637
04:30 PM	0	212	1	213	8	0	6	14	15	361	2	378	10	0	16	26	631
04:45 PM	7	227	1	235	4	0	9	13	19	349	1	369	45	0	19	64	681
Total	12	857	5	874	20	0	27	47	64	1446	5	1515	81	0	66	147	2583
05:00 PM	3	226	1	230	9	0	10	19	16	417	0	433	31	0	22	53	735
05:15 PM	2	233	1	236	0	1	1	2	17	443	0	460	36	0	19	55	753
05:30 PM	2	185	0	187	6	0	4	10	16	385	1	402	17	1	8	26	625
05:45 PM	2	166	1	169	1	0	7	8	26	350	0	376	9	0	7	16	569
Total	9	810	3	822	16	1	22	39	75	1595	1	1671	93	1	56	150	2682
Grand Total	21	1667	8	1696	36	1	49	86	139	3041	6	3186	174	1	122	297	5265
Apprch %	1.2	98.3	0.5		41.9	1.2	57		4.4	95.4	0.2		58.6	0.3	41.1		
Total %	0.4	31.7	0.2	32.2	0.7	0	0.9	1.6	2.6	57.8	0.1	60.5	3.3	0	2.3	5.6	

	Milliken Avenue Southbound				7th Street Westbound				Milliken Avenue Northbound				7th Street Eastbound				
Start Time	Left	Thru	Right	App. Total	Left	Thru	Right	App. Total	Left	Thru	Right	App. Total	Left	Thru	Right	App. Total	Int. Total
Peak Hour Analysis From 04:30 PM to 05:15 PM - Peak 1 of 1																	
Peak Hour for Entire Intersection Begins at 04:30 PM																	
04:30 PM	0	212	**1**	213	8	0	6	14	15	361	**2**	378	10	0	16	26	631
04:45 PM	**7**	227	1	235	4	0	9	13	**19**	349	1	369	**45**	0	19	**64**	681
05:00 PM	3	226	1	230	**9**	0	**10**	**19**	16	417	0	433	31	0	**22**	53	735
05:15 PM	2	**233**	1	**236**	0	**1**	1	2	17	**443**	0	**460**	36	0	19	55	**753**
Total Volume	12	898	4	914	21	1	26	48	67	1570	3	1640	122	0	76	198	2800
% App. Total	1.3	98.2	0.4		43.8	2.1	54.2		4.1	95.7	0.2		61.6	0	38.4		
PHF	.429	.964	1.00	.968	.583	.250	.650	.632	.882	.886	.375	.891	.678	.000	.864	.773	.930

Counts Unlimited, Inc.
PO Box 1178
Corona, CA 92878
(951)268-6268

City of Rancho Cucamonga
N/S: Milliken Avenue
E/W: 7th Street
Weather: Clear

File Name : 08_RNC_Mil_7th PM
Site Code : 00322818
Start Date : 9/20/2022
Page No : 2

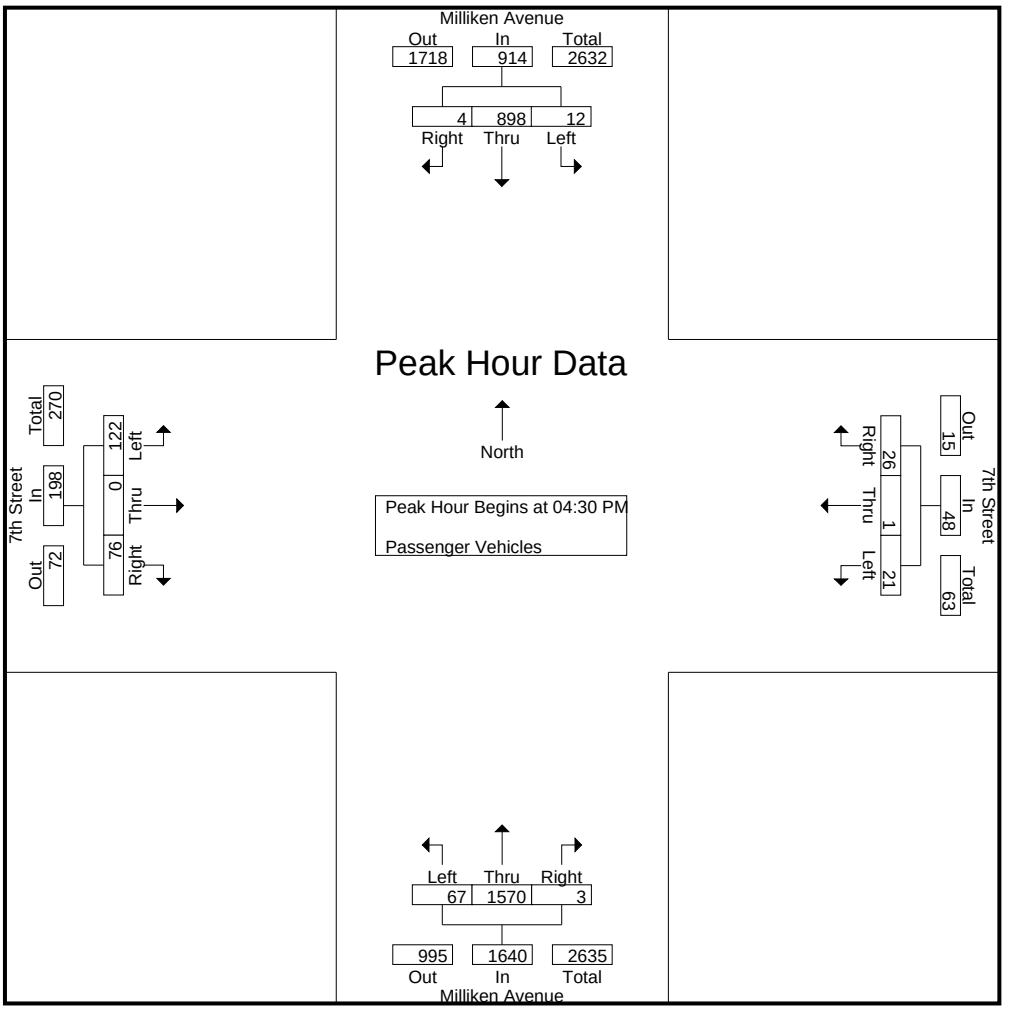

Peak Hour Analysis From 04:30 PM to 05:15 PM - Peak 1 of 1
Peak Hour for Each Approach Begins at:

	04:30 PM				04:30 PM				04:30 PM				04:30 PM			
+0 mins.	0	212	**1**	213	8	0	6	14	15	361	**2**	378	10	0	16	26
+15 mins.	**7**	227	1	235	4	0	9	13	**19**	349	1	369	**45**	0	19	**64**
+30 mins.	3	226	1	230	**9**	0	**10**	**19**	16	417	0	433	31	0	**22**	53
+45 mins.	2	**233**	1	**236**	0	**1**	1	2	17	**443**	0	**460**	36	0	19	55
Total Volume	12	898	4	914	21	1	26	48	67	1570	3	1640	122	0	76	198
% App. Total	1.3	98.2	0.4		43.8	2.1	54.2		4.1	95.7	0.2		61.6	0	38.4	
PHF	.429	.964	1.000	.968	.583	.250	.650	.632	.882	.886	.375	.891	.678	.000	.864	.773

Counts Unlimited, Inc.
PO Box 1178
Corona, CA 92878
(951)268-6268

City of Rancho Cucamonga
N/S: Milliken Avenue
E/W: 7th Street
Weather: Clear

File Name : 08_RNC_Mil_7th PM
Site Code : 00322818
Start Date : 9/20/2022
Page No : 1

Groups Printed- Large 2 Axle Vehicles

	Milliken Avenue Southbound				7th Street Westbound				Milliken Avenue Northbound				7th Street Eastbound				
Start Time	Left	Thru	Right	App. Total	Left	Thru	Right	App. Total	Left	Thru	Right	App. Total	Left	Thru	Right	App. Total	Int. Total
04:00 PM	0	2	0	2	0	0	0	0	1	2	0	3	0	0	0	0	5
04:15 PM	0	2	0	2	0	0	0	0	0	2	0	2	1	0	1	2	6
04:30 PM	1	4	0	5	0	1	0	1	0	6	1	7	0	0	0	0	13
04:45 PM	0	3	0	3	2	0	0	2	1	3	0	4	0	1	1	2	11
Total	1	11	0	12	2	1	0	3	2	13	1	16	1	1	2	4	35
05:00 PM	0	0	0	0	1	0	0	1	0	3	0	3	0	0	1	1	5
05:15 PM	0	2	0	2	0	0	0	0	1	3	0	4	1	0	0	1	7
05:30 PM	0	6	0	6	0	0	0	0	0	1	0	1	0	0	0	0	7
05:45 PM	0	1	0	1	0	0	0	0	0	1	0	1	0	0	1	1	3
Total	0	9	0	9	1	0	0	1	1	8	0	9	1	0	2	3	22
Grand Total	1	20	0	21	3	1	0	4	3	21	1	25	2	1	4	7	57
Apprch %	4.8	95.2	0		75	25	0		12	84	4		28.6	14.3	57.1		
Total %	1.8	35.1	0	36.8	5.3	1.8	0	7	5.3	36.8	1.8	43.9	3.5	1.8	7	12.3	

	Milliken Avenue Southbound				7th Street Westbound				Milliken Avenue Northbound				7th Street Eastbound				
Start Time	Left	Thru	Right	App. Total	Left	Thru	Right	App. Total	Left	Thru	Right	App. Total	Left	Thru	Right	App. Total	Int. Total
Peak Hour Analysis From 04:30 PM to 05:15 PM - Peak 1 of 1																	
Peak Hour for Entire Intersection Begins at 04:30 PM																	
04:30 PM	**1**	**4**	0	**5**	0	**1**	0	1	0	**6**	**1**	**7**	0	0	0	0	**13**
04:45 PM	0	3	0	3	**2**	0	0	**2**	**1**	3	0	4	0	**1**	**1**	**2**	11
05:00 PM	0	0	0	0	1	0	0	1	0	3	0	3	0	0	1	1	5
05:15 PM	0	2	0	2	0	0	0	0	1	3	0	4	**1**	0	0	1	7
Total Volume	1	9	0	10	3	1	0	4	2	15	1	18	1	1	2	4	36
% App. Total	10	90	0		75	25	0		11.1	83.3	5.6		25	25	50		
PHF	.250	.563	.000	.500	.375	.250	.000	.500	.500	.625	.250	.643	.250	.250	.500	.500	.692

Counts Unlimited, Inc.
PO Box 1178
Corona, CA 92878
(951)268-6268

City of Rancho Cucamonga
N/S: Milliken Avenue
E/W: 7th Street
Weather: Clear

File Name : 08_RNC_Mil_7th PM
Site Code : 00322818
Start Date : 9/20/2022
Page No : 2

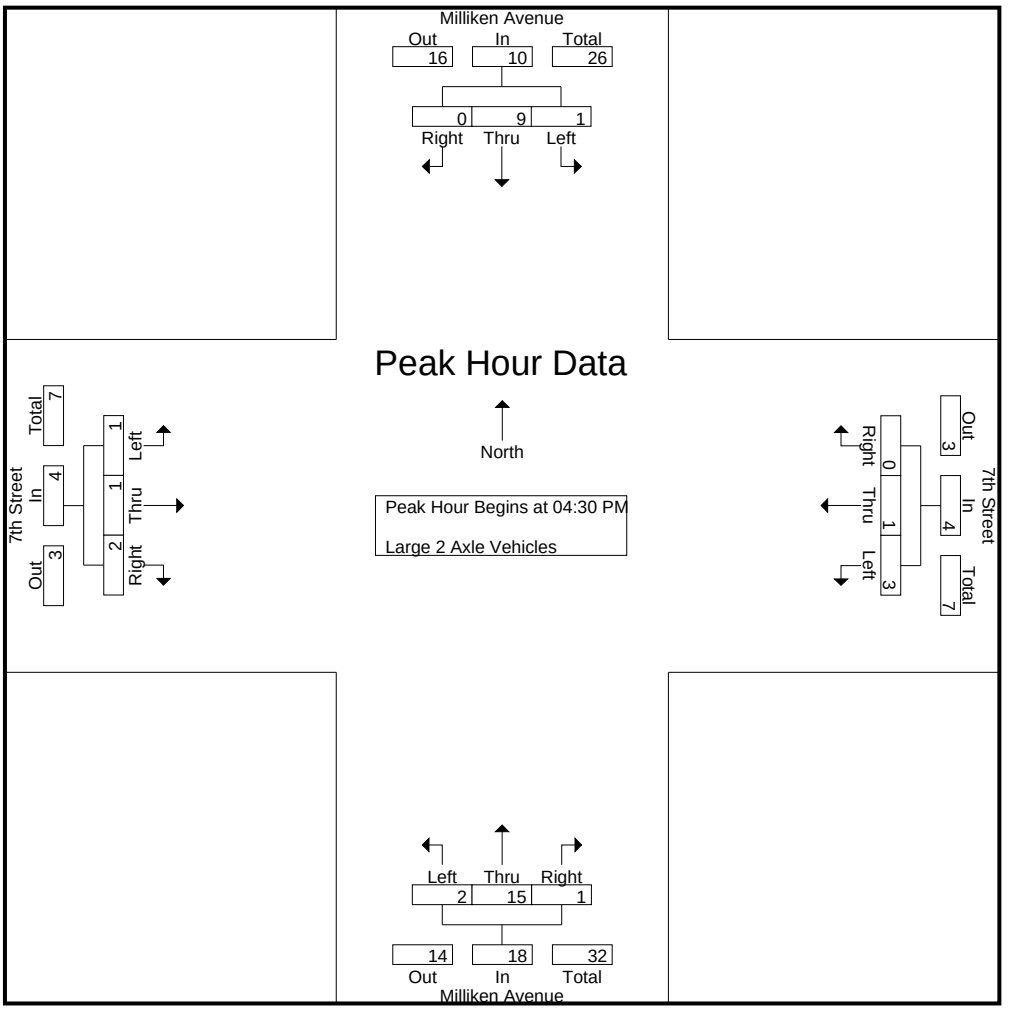

Peak Hour Analysis From 04:30 PM to 05:15 PM - Peak 1 of 1
Peak Hour for Each Approach Begins at:

	04:30 PM				04:30 PM				04:30 PM				04:30 PM			
+0 mins.	**1**	**4**	0	**5**	0	**1**	0	1	0	**6**	**1**	**7**	0	0	0	0
+15 mins.	0	3	0	3	**2**	0	0	**2**	**1**	3	0	4	0	**1**	**1**	**2**
+30 mins.	0	0	0	0	1	0	0	1	0	3	0	3	0	0	1	1
+45 mins.	0	2	0	2	0	0	0	0	1	3	0	4	**1**	0	0	1
Total Volume	1	9	0	10	3	1	0	4	2	15	1	18	1	1	2	4
% App. Total	10	90	0		75	25	0		11.1	83.3	5.6		25	25	50	
PHF	.250	.563	.000	.500	.375	.250	.000	.500	.500	.625	.250	.643	.250	.250	.500	.500

Counts Unlimited, Inc.
PO Box 1178
Corona, CA 92878
(951)268-6268

City of Rancho Cucamonga
N/S: Milliken Avenue
E/W: 7th Street
Weather: Clear

File Name : 08_RNC_Mil_7th PM
Site Code : 00322818
Start Date : 9/20/2022
Page No : 1

Groups Printed- 3 Axle Vehicles

	Milliken Avenue Southbound				7th Street Westbound				Milliken Avenue Northbound				7th Street Eastbound				
Start Time	Left	Thru	Right	App. Total	Left	Thru	Right	App. Total	Left	Thru	Right	App. Total	Left	Thru	Right	App. Total	Int. Total
04:00 PM	0	4	0	4	0	0	0	0	0	3	0	3	0	0	0	0	7
04:15 PM	0	1	0	1	0	0	0	0	0	2	0	2	0	0	0	0	3
04:30 PM	0	0	0	0	0	0	0	0	0	3	0	3	0	0	0	0	3
04:45 PM	0	3	0	3	0	0	0	0	0	3	0	3	0	0	0	0	6
Total	0	8	0	8	0	0	0	0	0	11	0	11	0	0	0	0	19
05:00 PM	0	0	0	0	0	0	0	0	0	2	0	2	0	0	0	0	2
05:15 PM	0	0	0	0	0	0	0	0	0	2	0	2	0	0	0	0	2
05:30 PM	0	0	0	0	0	0	0	0	0	1	0	1	0	0	0	0	1
05:45 PM	0	1	0	1	0	0	0	0	0	3	0	3	0	0	0	0	4
Total	0	1	0	1	0	0	0	0	0	8	0	8	0	0	0	0	9
Grand Total	0	9	0	9	0	0	0	0	0	19	0	19	0	0	0	0	28
Apprch %	0	100	0		0	0	0		0	100	0		0	0	0		
Total %	0	32.1	0	32.1	0	0	0	0	0	67.9	0	67.9	0	0	0	0	

	Milliken Avenue Southbound				7th Street Westbound				Milliken Avenue Northbound				7th Street Eastbound				
Start Time	Left	Thru	Right	App. Total	Left	Thru	Right	App. Total	Left	Thru	Right	App. Total	Left	Thru	Right	App. Total	Int. Total
Peak Hour Analysis From 04:30 PM to 05:15 PM - Peak 1 of 1																	
Peak Hour for Entire Intersection Begins at 04:30 PM																	
04:30 PM	0	0	0	0	0	0	0	0	0	**3**	0	**3**	0	0	0	0	3
04:45 PM	0	**3**	0	**3**	0	0	0	0	0	3	0	3	0	0	0	0	**6**
05:00 PM	0	0	0	0	0	0	0	0	0	2	0	2	0	0	0	0	2
05:15 PM	0	0	0	0	0	0	0	0	0	2	0	2	0	0	0	0	2
Total Volume	0	3	0	3	0	0	0	0	0	10	0	10	0	0	0	0	13
% App. Total	0	100	0		0	0	0		0	100	0		0	0	0		
PHF	.000	.250	.000	.250	.000	.000	.000	.000	.000	.833	.000	.833	.000	.000	.000	.000	.542

Counts Unlimited, Inc.
PO Box 1178
Corona, CA 92878
(951)268-6268

City of Rancho Cucamonga
N/S: Milliken Avenue
E/W: 7th Street
Weather: Clear

File Name : 08_RNC_Mil_7th PM
Site Code : 00322818
Start Date : 9/20/2022
Page No : 2

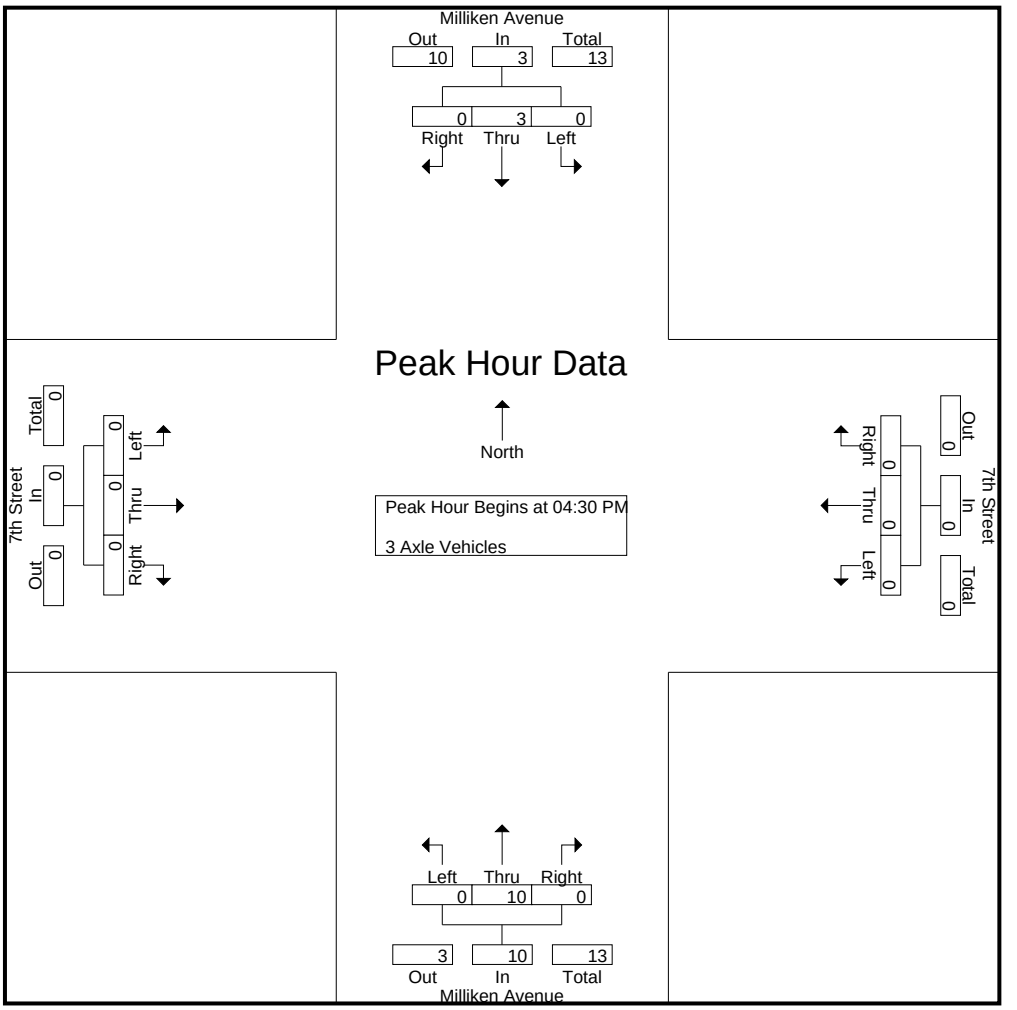

Peak Hour Analysis From 04:30 PM to 05:15 PM - Peak 1 of 1
Peak Hour for Each Approach Begins at:

	04:30 PM				04:30 PM				04:30 PM				04:30 PM			
+0 mins.	0	0	0	0	0	0	0	0	0	**3**	0	**3**	0	0	0	0
+15 mins.	0	**3**	0	**3**	0	0	0	0	0	3	0	3	0	0	0	0
+30 mins.	0	0	0	0	0	0	0	0	0	2	0	2	0	0	0	0
+45 mins.	0	0	0	0	0	0	0	0	0	2	0	2	0	0	0	0
Total Volume	0	3	0	3	0	0	0	0	0	10	0	10	0	0	0	0
% App. Total	0	100	0		0	0	0		0	100	0		0	0	0	
PHF	.000	.250	.000	.250	.000	.000	.000	.000	.000	.833	.000	.833	.000	.000	.000	.000

Counts Unlimited, Inc.
PO Box 1178
Corona, CA 92878
(951)268-6268

City of Rancho Cucamonga
N/S: Milliken Avenue
E/W: 7th Street
Weather: Clear

File Name : 08_RNC_Mil_7th PM
Site Code : 00322818
Start Date : 9/20/2022
Page No : 1

Groups Printed- 4+ Axle Trucks

	Milliken Avenue Southbound				7th Street Westbound				Milliken Avenue Northbound				7th Street Eastbound				
Start Time	Left	Thru	Right	App. Total	Left	Thru	Right	App. Total	Left	Thru	Right	App. Total	Left	Thru	Right	App. Total	Int. Total
04:00 PM	0	7	0	7	0	0	0	0	0	8	0	8	0	0	0	0	15
04:15 PM	0	3	0	3	0	0	1	1	0	7	0	7	0	0	0	0	11
04:30 PM	0	5	0	5	0	0	1	1	0	9	1	10	0	0	0	0	16
04:45 PM	0	6	0	6	0	0	0	0	0	3	0	3	0	0	0	0	9
Total	0	21	0	21	0	0	2	2	0	27	1	28	0	0	0	0	51
05:00 PM	0	11	0	11	0	0	0	0	0	5	0	5	0	0	0	0	16
05:15 PM	0	2	1	3	0	0	0	0	0	2	0	2	0	0	0	0	5
05:30 PM	0	6	0	6	1	0	0	1	0	5	0	5	0	0	0	0	12
05:45 PM	0	1	0	1	0	0	0	0	0	6	0	6	0	0	0	0	7
Total	0	20	1	21	1	0	0	1	0	18	0	18	0	0	0	0	40
Grand Total	0	41	1	42	1	0	2	3	0	45	1	46	0	0	0	0	91
Apprch %	0	97.6	2.4		33.3	0	66.7		0	97.8	2.2		0	0	0		
Total %	0	45.1	1.1	46.2	1.1	0	2.2	3.3	0	49.5	1.1	50.5	0	0	0	0	

	Milliken Avenue Southbound				7th Street Westbound				Milliken Avenue Northbound				7th Street Eastbound				
Start Time	Left	Thru	Right	App. Total	Left	Thru	Right	App. Total	Left	Thru	Right	App. Total	Left	Thru	Right	App. Total	Int. Total
Peak Hour Analysis From 04:30 PM to 05:15 PM - Peak 1 of 1																	
Peak Hour for Entire Intersection Begins at 04:30 PM																	
04:30 PM	0	5	0	5	0	0	**1**	**1**	0	**9**	**1**	**10**	0	0	0	0	**16**
04:45 PM	0	6	0	6	0	0	0	0	0	3	0	3	0	0	0	0	9
05:00 PM	0	**11**	0	**11**	0	0	0	0	0	5	0	5	0	0	0	0	16
05:15 PM	0	2	**1**	3	0	0	0	0	0	2	0	2	0	0	0	0	5
Total Volume	0	24	1	25	0	0	1	1	0	19	1	20	0	0	0	0	46
% App. Total	0	96	4		0	0	100		0	95	5		0	0	0		
PHF	.000	.545	.250	.568	.000	.000	.250	.250	.000	.528	.250	.500	.000	.000	.000	.000	.719

Counts Unlimited, Inc.
PO Box 1178
Corona, CA 92878
(951)268-6268

City of Rancho Cucamonga
N/S: Milliken Avenue
E/W: 7th Street
Weather: Clear

File Name : 08_RNC_Mil_7th PM
Site Code : 00322818
Start Date : 9/20/2022
Page No : 2

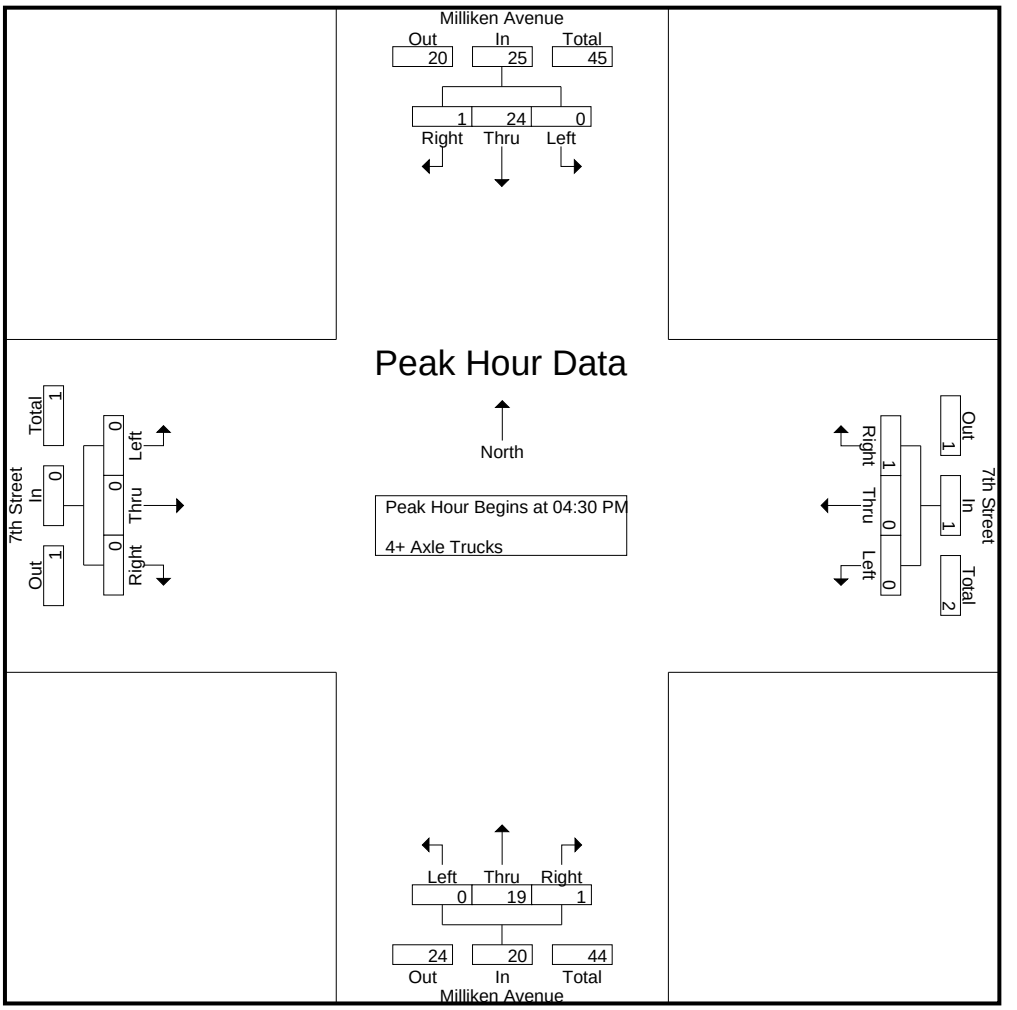

Peak Hour Analysis From 04:30 PM to 05:15 PM - Peak 1 of 1
Peak Hour for Each Approach Begins at:

	04:30 PM				04:30 PM				04:30 PM				04:30 PM			
+0 mins.	0	5	0	5	0	0	**1**	**1**	0	**9**	**1**	**10**	0	0	0	0
+15 mins.	0	6	0	6	0	0	0	0	0	3	0	3	0	0	0	0
+30 mins.	0	**11**	0	**11**	0	0	0	0	0	5	0	5	0	0	0	0
+45 mins.	0	2	**1**	3	0	0	0	0	0	2	0	2	0	0	0	0
Total Volume	0	24	1	25	0	0	1	1	0	19	1	20	0	0	0	0
% App. Total	0	96	4		0	0	100		0	95	5		0	0	0	
PHF	.000	.545	.250	.568	.000	.000	.250	.250	.000	.528	.250	.500	.000	.000	.000	.000

Location: Rancho Cucamonga
N/S: Milliken Avenue
E/W: 7th Street

Date: 9/20/2022
Day: Tuesday

PEDESTRIANS

	North Leg Milliken Avenue	East Leg 7th Street	South Leg Milliken Avenue	West Leg 7th Street	
	Pedestrians	Pedestrians	Pedestrians	Pedestrians	
7:00 AM	0	0	0	0	0
7:15 AM	0	1	0	1	2
7:30 AM	0	1	0	0	1
7:45 AM	0	0	0	0	0
8:00 AM	0	0	0	0	0
8:15 AM	0	0	0	0	0
8:30 AM	0	0	0	0	0
8:45 AM	0	0	0	0	0
TOTAL VOLUMES:	0	2	0	1	3

	North Leg Milliken Avenue	East Leg 7th Street	South Leg Milliken Avenue	West Leg 7th Street	
	Pedestrians	Pedestrians	Pedestrians	Pedestrians	
4:00 PM	0	0	0	1	1
4:15 PM	0	0	0	0	0
4:30 PM	0	0	0	3	3
4:45 PM	0	0	0	1	1
5:00 PM	0	0	0	1	1
5:15 PM	0	0	0	0	0
5:30 PM	0	0	0	0	0
5:45 PM	0	0	0	1	1
TOTAL VOLUMES:	0	0	0	7	7

Counts Unlimited, Inc.
PO Box 1178
Corona, CA 92878
951-268-6268

Location: Rancho Cucamonga
N/S: Milliken Avenue
E/W: 7th Street

Date: 9/20/2022
Day: Tuesday

BICYCLES

	Southbound Milliken Avenue			Westbound 7th Street			Northbound Milliken Avenue			Eastbound 7th Street			
	Left	Thru	Right	Left	Thru	Right	Left	Thru	Right	Left	Thru	Right	
7:00 AM	0	1	0	0	0	0	0	0	0	0	0	0	1
7:15 AM	0	0	0	0	0	0	0	0	0	0	0	0	0
7:30 AM	0	0	0	0	0	0	1	0	0	0	0	0	1
7:45 AM	0	0	0	0	0	0	0	0	0	0	0	1	1
8:00 AM	0	0	0	0	0	0	0	0	0	0	0	1	1
8:15 AM	0	1	0	0	0	0	0	0	0	0	0	0	1
8:30 AM	0	1	0	0	0	0	0	0	0	0	0	0	1
8:45 AM	0	0	0	0	0	0	0	0	0	0	0	0	0
TOTAL VOLUMES:	0	3	0	0	0	0	1	0	0	0	0	2	6

	Southbound Milliken Avenue			Westbound 7th Street			Northbound Milliken Avenue			Eastbound 7th Street			
	Left	Thru	Right	Left	Thru	Right	Left	Thru	Right	Left	Thru	Right	
4:00 PM	0	0	0	0	0	0	0	1	0	0	0	0	1
4:15 PM	0	0	0	0	0	0	0	1	0	0	0	0	1
4:30 PM	0	0	0	0	0	0	0	0	0	0	0	0	0
4:45 PM	0	0	0	0	0	0	0	3	0	0	0	0	3
5:00 PM	0	0	0	0	0	0	0	0	0	0	0	0	0
5:15 PM	0	0	0	0	0	0	0	0	0	0	0	0	0
5:30 PM	0	0	0	0	0	0	0	0	0	0	0	0	0
5:45 PM	0	0	0	0	0	0	0	0	0	0	0	0	0
TOTAL VOLUMES:	0	0	0	0	0	0	0	5	0	0	0	0	5

Counts Unlimited, Inc.
PO Box 1178
Corona, CA 92878
951-268-6268

Counts Unlimited, Inc.
PO Box 1178
Corona, CA 92878
(951)268-6268

City of Rancho Cucamonga
N/S: Milliken Avenue
E/W: 6th Street
Weather: Clear

File Name : 09_RNC_Mil_6th AM
Site Code : 00322818
Start Date : 9/20/2022
Page No : 1

Groups Printed- Passenger Vehicles - Large 2 Axle Vehicles - 3 Axle Vehicles - 4+ Axle Trucks

	Milliken Avenue Southbound				6th Street Westbound				Milliken Avenue Northbound				6th Street Eastbound				
Start Time	Left	Thru	Right	App. Total	Left	Thru	Right	App. Total	Left	Thru	Right	App. Total	Left	Thru	Right	App. Total	Int. Total
07:00 AM	17	88	30	135	10	42	16	68	36	96	12	144	25	42	12	79	426
07:15 AM	18	108	38	164	7	37	20	64	38	90	19	147	23	35	15	73	448
07:30 AM	15	166	62	243	14	54	20	88	23	113	13	149	28	55	19	102	582
07:45 AM	41	131	71	243	15	62	29	106	42	180	19	241	37	73	19	129	719
Total	91	493	201	785	46	195	85	326	139	479	63	681	113	205	65	383	2175
08:00 AM	29	178	59	266	14	59	16	89	31	131	14	176	40	45	14	99	630
08:15 AM	15	160	73	248	19	53	20	92	31	153	24	208	28	51	15	94	642
08:30 AM	34	192	57	283	12	42	24	78	35	180	14	229	10	45	24	79	669
08:45 AM	22	143	33	198	17	46	26	89	29	147	18	194	29	35	32	96	577
Total	100	673	222	995	62	200	86	348	126	611	70	807	107	176	85	368	2518
Grand Total	191	1166	423	1780	108	395	171	674	265	1090	133	1488	220	381	150	751	4693
Apprch %	10.7	65.5	23.8		16	58.6	25.4		17.8	73.3	8.9		29.3	50.7	20		
Total %	4.1	24.8	9	37.9	2.3	8.4	3.6	14.4	5.6	23.2	2.8	31.7	4.7	8.1	3.2	16	
Passenger Vehicles	173	1070	407	1650	90	345	154	589	239	1005	101	1345	208	358	129	695	4279
% Passenger Vehicles	90.6	91.8	96.2	92.7	83.3	87.3	90.1	87.4	90.2	92.2	75.9	90.4	94.5	94	86	92.5	91.2
Large 2 Axle Vehicles	6	27	9	42	3	19	7	29	5	22	6	33	4	7	1	12	116
% Large 2 Axle Vehicles	3.1	2.3	2.1	2.4	2.8	4.8	4.1	4.3	1.9	2	4.5	2.2	1.8	1.8	0.7	1.6	2.5
3 Axle Vehicles	1	17	3	21	0	4	2	6	3	12	1	16	5	4	3	12	55
% 3 Axle Vehicles	0.5	1.5	0.7	1.2	0	1	1.2	0.9	1.1	1.1	0.8	1.1	2.3	1	2	1.6	1.2
4+ Axle Trucks	11	52	4	67	15	27	8	50	18	51	25	94	3	12	17	32	243
% 4+ Axle Trucks	5.8	4.5	0.9	3.8	13.9	6.8	4.7	7.4	6.8	4.7	18.8	6.3	1.4	3.1	11.3	4.3	5.2

	Milliken Avenue Southbound				6th Street Westbound				Milliken Avenue Northbound				6th Street Eastbound				
Start Time	Left	Thru	Right	App. Total	Left	Thru	Right	App. Total	Left	Thru	Right	App. Total	Left	Thru	Right	App. Total	Int. Total
Peak Hour Analysis From 07:00 AM to 08:45 AM - Peak 1 of 1																	
Peak Hour for Entire Intersection Begins at 07:45 AM																	
07:45 AM	**41**	131	71	243	15	**62**	**29**	**106**	**42**	**180**	19	**241**	37	**73**	19	**129**	**719**
08:00 AM	29	178	59	266	14	59	16	89	31	131	14	176	**40**	45	14	99	630
08:15 AM	15	160	**73**	248	**19**	53	20	92	31	153	**24**	208	28	51	15	94	642
08:30 AM	34	**192**	57	**283**	12	42	24	78	35	180	14	229	10	45	**24**	79	669
Total Volume	119	661	260	1040	60	216	89	365	139	644	71	854	115	214	72	401	2660
% App. Total	11.4	63.6	25		16.4	59.2	24.4		16.3	75.4	8.3		28.7	53.4	18		
PHF	.726	.861	.890	.919	.789	.871	.767	.861	.827	.894	.740	.886	.719	.733	.750	.777	.925

Counts Unlimited, Inc.
PO Box 1178
Corona, CA 92878
(951)268-6268

City of Rancho Cucamonga
N/S: Milliken Avenue
E/W: 6th Street
Weather: Clear

File Name : 09_RNC_Mil_6th AM
Site Code : 00322818
Start Date : 9/20/2022
Page No : 2

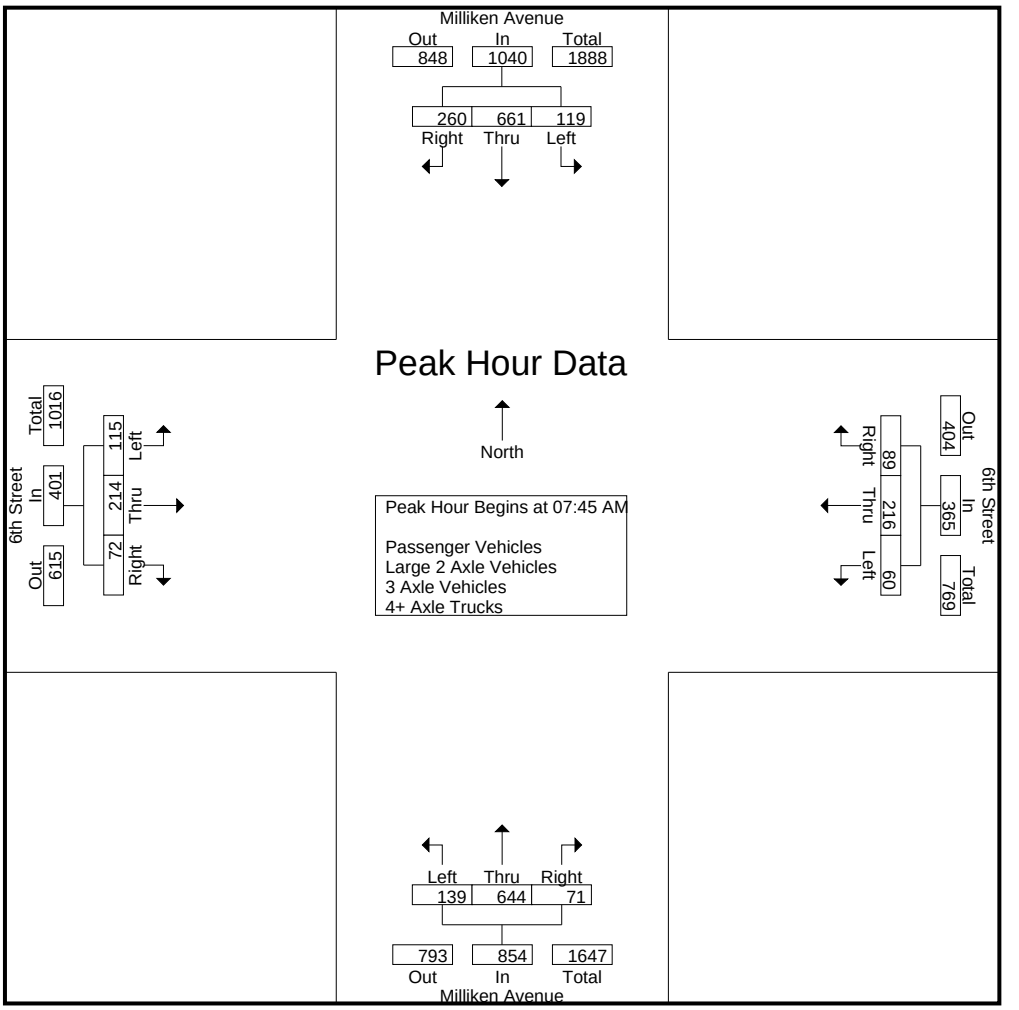

Peak Hour Analysis From 07:00 AM to 08:45 AM - Peak 1 of 1
Peak Hour for Each Approach Begins at:

	07:45 AM				07:30 AM				07:45 AM				07:30 AM			
+0 mins.	**41**	131	71	243	14	54	20	88	**42**	**180**	19	**241**	28	55	**19**	102
+15 mins.	29	178	59	266	15	**62**	**29**	**106**	31	131	14	176	37	**73**	19	**129**
+30 mins.	15	160	**73**	248	14	59	16	89	31	153	**24**	208	**40**	45	14	99
+45 mins.	34	**192**	57	**283**	**19**	53	20	92	35	180	14	229	28	51	15	94
Total Volume	119	661	260	1040	62	228	85	375	139	644	71	854	133	224	67	424
% App. Total	11.4	63.6	25		16.5	60.8	22.7		16.3	75.4	8.3		31.4	52.8	15.8	
PHF	.726	.861	.890	.919	.816	.919	.733	.884	.827	.894	.740	.886	.831	.767	.882	.822

Counts Unlimited, Inc.
PO Box 1178
Corona, CA 92878
(951)268-6268

City of Rancho Cucamonga
N/S: Milliken Avenue
E/W: 6th Street
Weather: Clear

File Name : 09_RNC_Mil_6th AM
Site Code : 00322818
Start Date : 9/20/2022
Page No : 1

Groups Printed- Passenger Vehicles

	Milliken Avenue Southbound				6th Street Westbound				Milliken Avenue Northbound				6th Street Eastbound				
Start Time	Left	Thru	Right	App. Total	Left	Thru	Right	App. Total	Left	Thru	Right	App. Total	Left	Thru	Right	App. Total	Int. Total
07:00 AM	14	80	28	122	8	34	14	56	32	86	10	128	24	39	9	72	378
07:15 AM	16	100	36	152	4	31	20	55	34	83	14	131	21	30	13	64	402
07:30 AM	13	149	60	222	11	50	19	80	22	105	10	137	26	52	16	94	533
07:45 AM	40	118	68	226	13	54	29	96	40	169	16	225	36	72	18	126	673
Total	83	447	192	722	36	169	82	287	128	443	50	621	107	193	56	356	1986
08:00 AM	27	171	58	256	11	55	14	80	30	117	8	155	38	43	11	92	583
08:15 AM	14	149	70	233	19	44	18	81	27	143	16	186	27	49	15	91	591
08:30 AM	30	176	54	260	9	35	19	63	31	166	12	209	9	42	18	69	601
08:45 AM	19	127	33	179	15	42	21	78	23	136	15	174	27	31	29	87	518
Total	90	623	215	928	54	176	72	302	111	562	51	724	101	165	73	339	2293
Grand Total	173	1070	407	1650	90	345	154	589	239	1005	101	1345	208	358	129	695	4279
Apprch %	10.5	64.8	24.7		15.3	58.6	26.1		17.8	74.7	7.5		29.9	51.5	18.6		
Total %	4	25	9.5	38.6	2.1	8.1	3.6	13.8	5.6	23.5	2.4	31.4	4.9	8.4	3	16.2	

	Milliken Avenue Southbound				6th Street Westbound				Milliken Avenue Northbound				6th Street Eastbound				
Start Time	Left	Thru	Right	App. Total	Left	Thru	Right	App. Total	Left	Thru	Right	App. Total	Left	Thru	Right	App. Total	Int. Total
Peak Hour Analysis From 07:45 AM to 08:30 AM - Peak 1 of 1																	
Peak Hour for Entire Intersection Begins at 07:45 AM																	
07:45 AM	**40**	118	68	226	13	54	**29**	**96**	**40**	**169**	**16**	**225**	36	**72**	**18**	**126**	**673**
08:00 AM	27	171	58	256	11	**55**	14	80	30	117	8	155	**38**	43	11	92	583
08:15 AM	14	149	**70**	233	**19**	44	18	81	27	143	16	186	27	49	15	91	591
08:30 AM	30	**176**	54	**260**	9	35	19	63	31	166	12	209	9	42	18	69	601
Total Volume	111	614	250	975	52	188	80	320	128	595	52	775	110	206	62	378	2448
% App. Total	11.4	63	25.6		16.2	58.8	25		16.5	76.8	6.7		29.1	54.5	16.4		
PHF	.694	.872	.893	.938	.684	.855	.690	.833	.800	.880	.813	.861	.724	.715	.861	.750	.909

Counts Unlimited, Inc.
PO Box 1178
Corona, CA 92878
(951)268-6268

City of Rancho Cucamonga
N/S: Milliken Avenue
E/W: 6th Street
Weather: Clear

File Name : 09_RNC_Mil_6th AM
Site Code : 00322818
Start Date : 9/20/2022
Page No : 2

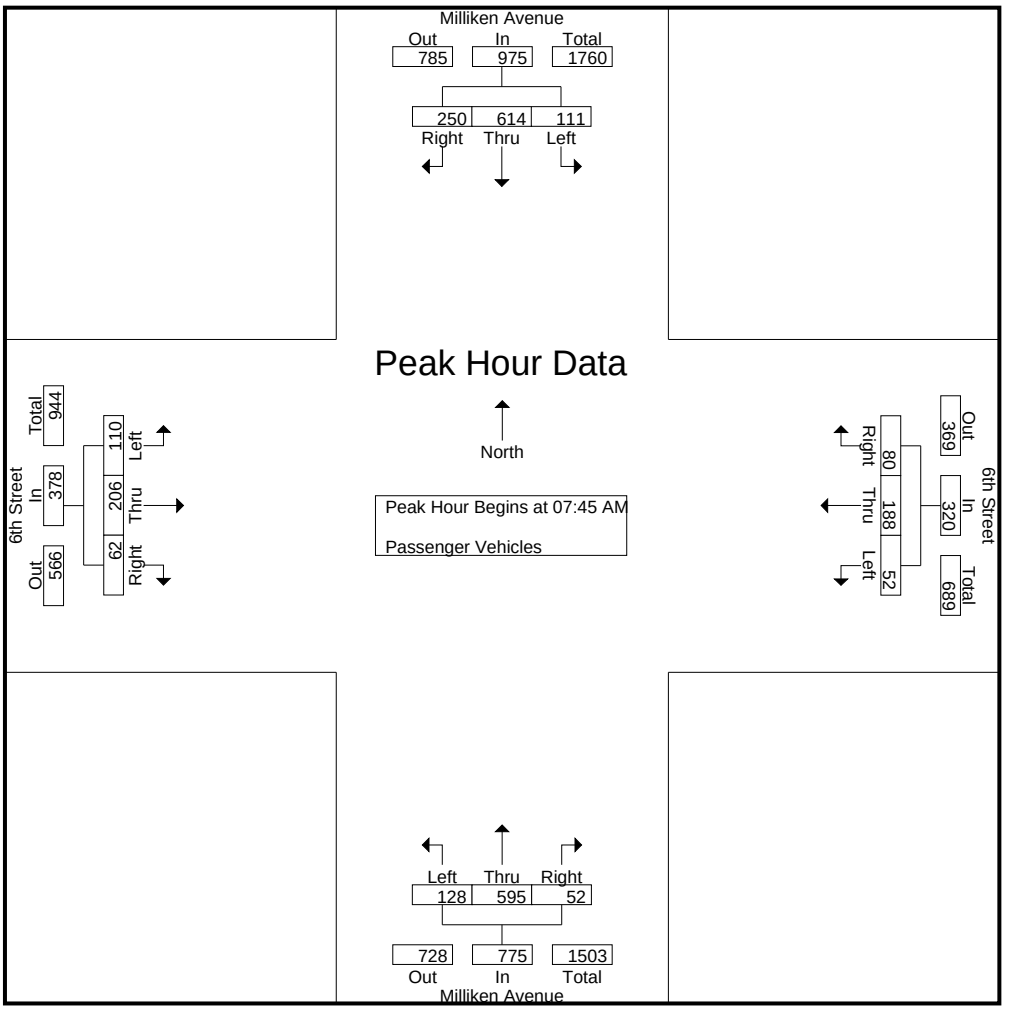

Peak Hour Analysis From 07:45 AM to 08:30 AM - Peak 1 of 1
Peak Hour for Each Approach Begins at:

	07:45 AM				07:45 AM				07:45 AM				07:45 AM			
+0 mins.	**40**	118	68	226	13	54	**29**	**96**	**40**	**169**	**16**	**225**	36	**72**	**18**	**126**
+15 mins.	27	171	58	256	11	**55**	14	80	30	117	8	155	**38**	43	11	92
+30 mins.	14	149	**70**	233	**19**	44	18	81	27	143	16	186	27	49	15	91
+45 mins.	30	**176**	54	**260**	9	35	19	63	31	166	12	209	9	42	18	69
Total Volume	111	614	250	975	52	188	80	320	128	595	52	775	110	206	62	378
% App. Total	11.4	63	25.6		16.2	58.8	25		16.5	76.8	6.7		29.1	54.5	16.4	
PHF	.694	.872	.893	.938	.684	.855	.690	.833	.800	.880	.813	.861	.724	.715	.861	.750

Counts Unlimited, Inc.
PO Box 1178
Corona, CA 92878
(951)268-6268

City of Rancho Cucamonga
N/S: Milliken Avenue
E/W: 6th Street
Weather: Clear

File Name : 09_RNC_Mil_6th AM
Site Code : 00322818
Start Date : 9/20/2022
Page No : 1

Groups Printed- Large 2 Axle Vehicles

	Milliken Avenue Southbound				6th Street Westbound				Milliken Avenue Northbound				6th Street Eastbound				
Start Time	Left	Thru	Right	App. Total	Left	Thru	Right	App. Total	Left	Thru	Right	App. Total	Left	Thru	Right	App. Total	Int. Total
07:00 AM	0	3	2	5	0	3	2	5	0	4	1	5	1	1	0	2	17
07:15 AM	2	4	2	8	0	2	0	2	1	1	2	4	0	2	0	2	16
07:30 AM	1	7	1	9	1	1	0	2	0	4	1	5	1	1	0	2	18
07:45 AM	0	2	0	2	2	4	0	6	0	4	1	5	0	1	0	1	14
Total	3	16	5	24	3	10	2	15	1	13	5	19	2	5	0	7	65
08:00 AM	1	2	0	3	0	2	2	4	0	0	0	0	1	1	0	2	9
08:15 AM	0	2	2	4	0	4	1	5	1	2	1	4	0	0	0	0	13
08:30 AM	1	4	2	7	0	1	2	3	2	5	0	7	0	1	0	1	18
08:45 AM	1	3	0	4	0	2	0	2	1	2	0	3	1	0	1	2	11
Total	3	11	4	18	0	9	5	14	4	9	1	14	2	2	1	5	51
Grand Total	6	27	9	42	3	19	7	29	5	22	6	33	4	7	1	12	116
Apprch %	14.3	64.3	21.4		10.3	65.5	24.1		15.2	66.7	18.2		33.3	58.3	8.3		
Total %	5.2	23.3	7.8	36.2	2.6	16.4	6	25	4.3	19	5.2	28.4	3.4	6	0.9	10.3	

	Milliken Avenue Southbound				6th Street Westbound				Milliken Avenue Northbound				6th Street Eastbound				
Start Time	Left	Thru	Right	App. Total	Left	Thru	Right	App. Total	Left	Thru	Right	App. Total	Left	Thru	Right	App. Total	Int. Total
Peak Hour Analysis From 07:45 AM to 08:30 AM - Peak 1 of 1																	
Peak Hour for Entire Intersection Begins at 07:45 AM																	
07:45 AM	0	2	0	2	**2**	**4**	0	**6**	0	4	**1**	5	0	**1**	0	1	14
08:00 AM	**1**	2	0	3	0	2	**2**	4	0	0	0	0	**1**	1	0	**2**	9
08:15 AM	0	2	**2**	4	0	4	1	5	1	2	1	4	0	0	0	0	13
08:30 AM	1	**4**	2	**7**	0	1	2	3	**2**	**5**	0	**7**	0	1	0	1	**18**
Total Volume	2	10	4	16	2	11	5	18	3	11	2	16	1	3	0	4	54
% App. Total	12.5	62.5	25		11.1	61.1	27.8		18.8	68.8	12.5		25	75	0		
PHF	.500	.625	.500	.571	.250	.688	.625	.750	.375	.550	.500	.571	.250	.750	.000	.500	.750

Counts Unlimited, Inc.
PO Box 1178
Corona, CA 92878
(951)268-6268

City of Rancho Cucamonga
N/S: Milliken Avenue
E/W: 6th Street
Weather: Clear

File Name : 09_RNC_Mil_6th AM
Site Code : 00322818
Start Date : 9/20/2022
Page No : 2

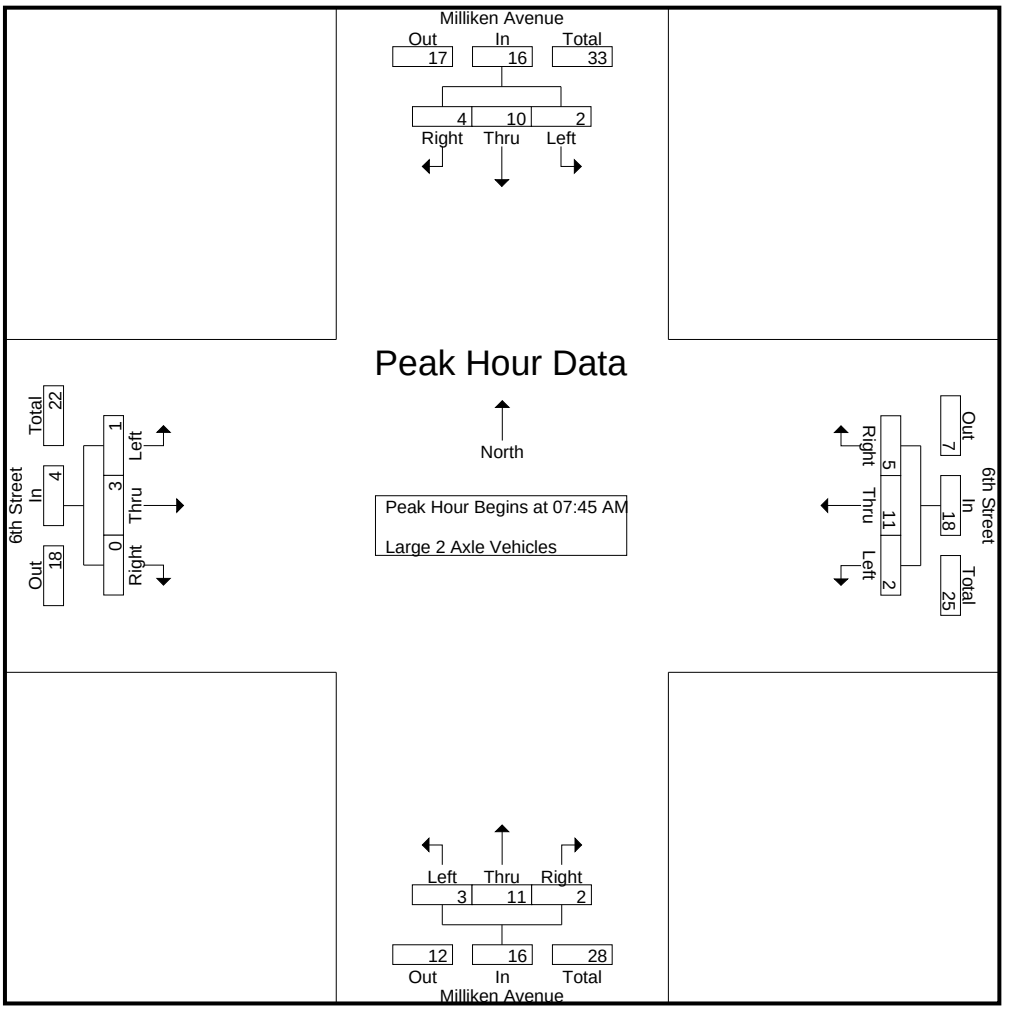

Peak Hour Analysis From 07:45 AM to 08:30 AM - Peak 1 of 1
Peak Hour for Each Approach Begins at:

	07:45 AM				07:45 AM				07:45 AM				07:45 AM			
+0 mins.	0	2	0	2	**2**	**4**	0	**6**	0	4	**1**	5	0	**1**	0	1
+15 mins.	**1**	2	0	3	0	2	**2**	4	0	0	0	0	**1**	1	0	**2**
+30 mins.	0	2	**2**	4	0	4	1	5	1	2	1	4	0	0	0	0
+45 mins.	1	**4**	2	**7**	0	1	2	3	**2**	**5**	0	**7**	0	1	0	1
Total Volume	2	10	4	16	2	11	5	18	3	11	2	16	1	3	0	4
% App. Total	12.5	62.5	25		11.1	61.1	27.8		18.8	68.8	12.5		25	75	0	
PHF	.500	.625	.500	.571	.250	.688	.625	.750	.375	.550	.500	.571	.250	.750	.000	.500

Counts Unlimited, Inc.
PO Box 1178
Corona, CA 92878
(951)268-6268

City of Rancho Cucamonga
N/S: Milliken Avenue
E/W: 6th Street
Weather: Clear

File Name : 09_RNC_Mil_6th AM
Site Code : 00322818
Start Date : 9/20/2022
Page No : 1

Groups Printed- 3 Axle Vehicles

	Milliken Avenue Southbound				6th Street Westbound				Milliken Avenue Northbound				6th Street Eastbound				
Start Time	Left	Thru	Right	App. Total	Left	Thru	Right	App. Total	Left	Thru	Right	App. Total	Left	Thru	Right	App. Total	Int. Total
07:00 AM	0	1	0	1	0	0	0	0	0	2	0	2	0	1	0	1	4
07:15 AM	0	1	0	1	0	1	0	1	0	0	0	0	1	2	0	3	5
07:30 AM	0	4	1	5	0	0	0	0	0	0	0	0	1	0	0	1	6
07:45 AM	0	2	2	4	0	0	0	0	0	2	0	2	1	0	0	1	7
Total	0	8	3	11	0	1	0	1	0	4	0	4	3	3	0	6	22
08:00 AM	0	1	0	1	0	0	0	0	1	2	1	4	1	0	1	2	7
08:15 AM	0	1	0	1	0	1	0	1	1	3	0	4	1	1	0	2	8
08:30 AM	0	5	0	5	0	2	1	3	1	2	0	3	0	0	2	2	13
08:45 AM	1	2	0	3	0	0	1	1	0	1	0	1	0	0	0	0	5
Total	1	9	0	10	0	3	2	5	3	8	1	12	2	1	3	6	33
Grand Total	1	17	3	21	0	4	2	6	3	12	1	16	5	4	3	12	55
Apprch %	4.8	81	14.3		0	66.7	33.3		18.8	75	6.2		41.7	33.3	25		
Total %	1.8	30.9	5.5	38.2	0	7.3	3.6	10.9	5.5	21.8	1.8	29.1	9.1	7.3	5.5	21.8	

	Milliken Avenue Southbound				6th Street Westbound				Milliken Avenue Northbound				6th Street Eastbound				
Start Time	Left	Thru	Right	App. Total	Left	Thru	Right	App. Total	Left	Thru	Right	App. Total	Left	Thru	Right	App. Total	Int. Total
Peak Hour Analysis From 07:45 AM to 08:30 AM - Peak 1 of 1																	
Peak Hour for Entire Intersection Begins at 07:45 AM																	
07:45 AM	0	2	**2**	4	0	0	0	0	0	2	0	2	**1**	0	0	1	7
08:00 AM	0	1	0	1	0	0	0	0	**1**	2	**1**	**4**	1	0	1	**2**	7
08:15 AM	0	1	0	1	0	1	0	1	1	**3**	0	4	1	**1**	0	2	8
08:30 AM	0	**5**	0	**5**	0	**2**	**1**	**3**	1	2	0	3	0	0	**2**	2	**13**
Total Volume	0	9	2	11	0	3	1	4	3	9	1	13	3	1	3	7	35
% App. Total	0	81.8	18.2		0	75	25		23.1	69.2	7.7		42.9	14.3	42.9		
PHF	.000	.450	.250	.550	.000	.375	.250	.333	.750	.750	.250	.813	.750	.250	.375	.875	.673

Counts Unlimited, Inc.
PO Box 1178
Corona, CA 92878
(951)268-6268

City of Rancho Cucamonga
N/S: Milliken Avenue
E/W: 6th Street
Weather: Clear

File Name : 09_RNC_Mil_6th AM
Site Code : 00322818
Start Date : 9/20/2022
Page No : 2

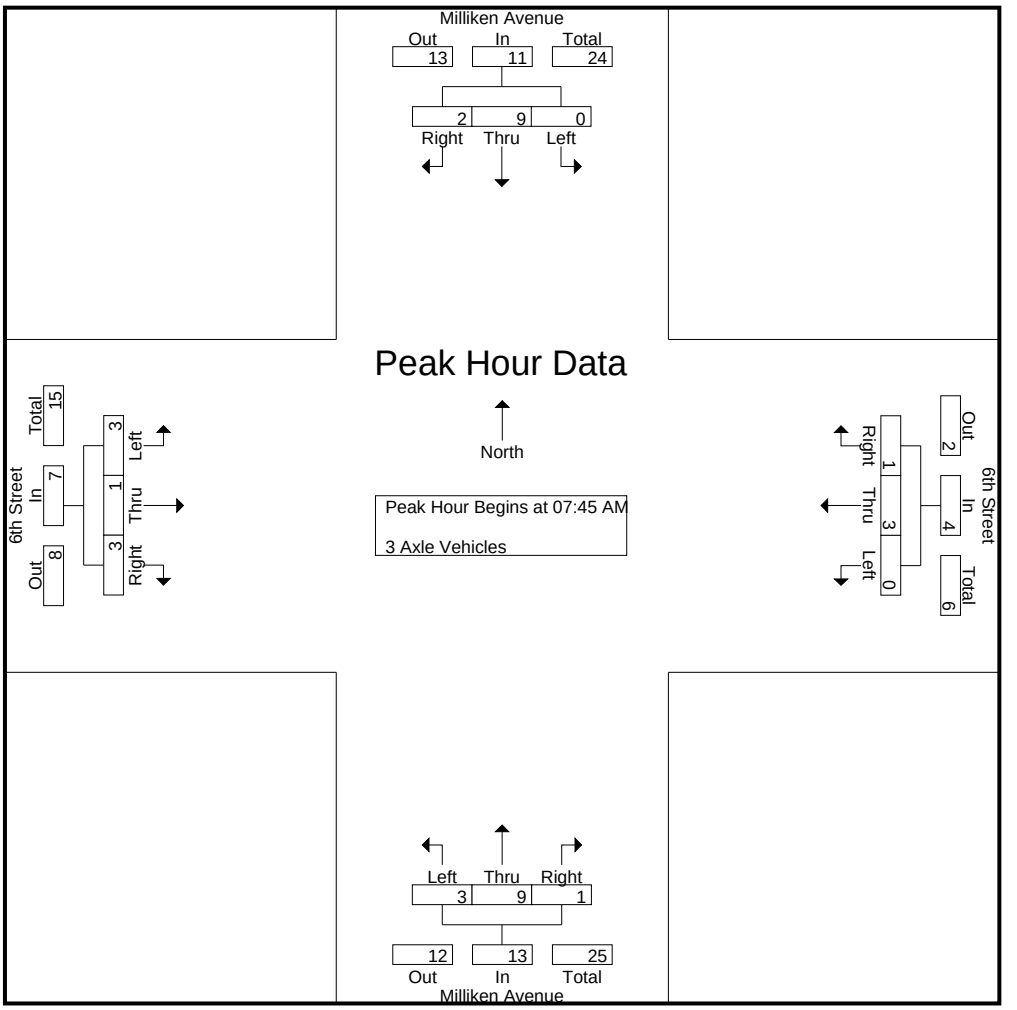

Peak Hour Analysis From 07:45 AM to 08:30 AM - Peak 1 of 1
Peak Hour for Each Approach Begins at:

	07:45 AM				07:45 AM				07:45 AM				07:45 AM			
+0 mins.	0	2	**2**	4	0	0	0	0	0	2	0	2	**1**	0	0	1
+15 mins.	0	1	0	1	0	0	0	0	**1**	2	**1**	**4**	1	0	1	**2**
+30 mins.	0	1	0	1	0	1	0	1	1	**3**	0	4	1	**1**	0	2
+45 mins.	0	**5**	0	**5**	0	**2**	**1**	**3**	1	2	0	3	0	0	**2**	2
Total Volume	0	9	2	11	0	3	1	4	3	9	1	13	3	1	3	7
% App. Total	0	81.8	18.2		0	75	25		23.1	69.2	7.7		42.9	14.3	42.9	
PHF	.000	.450	.250	.550	.000	.375	.250	.333	.750	.750	.250	.813	.750	.250	.375	.875

Counts Unlimited, Inc.
PO Box 1178
Corona, CA 92878
(951)268-6268

City of Rancho Cucamonga
N/S: Milliken Avenue
E/W: 6th Street
Weather: Clear

File Name : 09_RNC_Mil_6th AM
Site Code : 00322818
Start Date : 9/20/2022
Page No : 1

Groups Printed- 4+ Axle Trucks

	Milliken Avenue Southbound				6th Street Westbound				Milliken Avenue Northbound				6th Street Eastbound				
Start Time	Left	Thru	Right	App. Total	Left	Thru	Right	App. Total	Left	Thru	Right	App. Total	Left	Thru	Right	App. Total	Int. Total
07:00 AM	3	4	0	7	2	5	0	7	4	4	1	9	0	1	3	4	27
07:15 AM	0	3	0	3	3	3	0	6	3	6	3	12	1	1	2	4	25
07:30 AM	1	6	0	7	2	3	1	6	1	4	2	7	0	2	3	5	25
07:45 AM	1	9	1	11	0	4	0	4	2	5	2	9	0	0	1	1	25
Total	5	22	1	28	7	15	1	23	10	19	8	37	1	4	9	14	102
08:00 AM	1	4	1	6	3	2	0	5	0	12	5	17	0	1	2	3	31
08:15 AM	1	8	1	10	0	4	1	5	2	5	7	14	0	1	0	1	30
08:30 AM	3	7	1	11	3	4	2	9	1	7	2	10	1	2	4	7	37
08:45 AM	1	11	0	12	2	2	4	8	5	8	3	16	1	4	2	7	43
Total	6	30	3	39	8	12	7	27	8	32	17	57	2	8	8	18	141
Grand Total	11	52	4	67	15	27	8	50	18	51	25	94	3	12	17	32	243
Apprch %	16.4	77.6	6		30	54	16		19.1	54.3	26.6		9.4	37.5	53.1		
Total %	4.5	21.4	1.6	27.6	6.2	11.1	3.3	20.6	7.4	21	10.3	38.7	1.2	4.9	7	13.2	

	Milliken Avenue Southbound				6th Street Westbound				Milliken Avenue Northbound				6th Street Eastbound				
Start Time	Left	Thru	Right	App. Total	Left	Thru	Right	App. Total	Left	Thru	Right	App. Total	Left	Thru	Right	App. Total	Int. Total
Peak Hour Analysis From 07:45 AM to 08:30 AM - Peak 1 of 1																	
Peak Hour for Entire Intersection Begins at 07:45 AM																	
07:45 AM	1	**9**	**1**	**11**	0	**4**	0	4	**2**	5	2	9	0	0	1	1	25
08:00 AM	1	4	1	6	**3**	2	0	5	0	**12**	5	**17**	0	1	2	3	31
08:15 AM	1	8	1	10	0	4	1	5	2	5	**7**	14	0	1	0	1	30
08:30 AM	**3**	7	1	11	3	4	**2**	**9**	1	7	2	10	**1**	**2**	**4**	**7**	**37**
Total Volume	6	28	4	38	6	14	3	23	5	29	16	50	1	4	7	12	123
% App. Total	15.8	73.7	10.5		26.1	60.9	13		10	58	32		8.3	33.3	58.3		
PHF	.500	.778	1.00	.864	.500	.875	.375	.639	.625	.604	.571	.735	.250	.500	.438	.429	.831

Counts Unlimited, Inc.
PO Box 1178
Corona, CA 92878
(951)268-6268

City of Rancho Cucamonga
N/S: Milliken Avenue
E/W: 6th Street
Weather: Clear

File Name : 09_RNC_Mil_6th AM
Site Code : 00322818
Start Date : 9/20/2022
Page No : 2

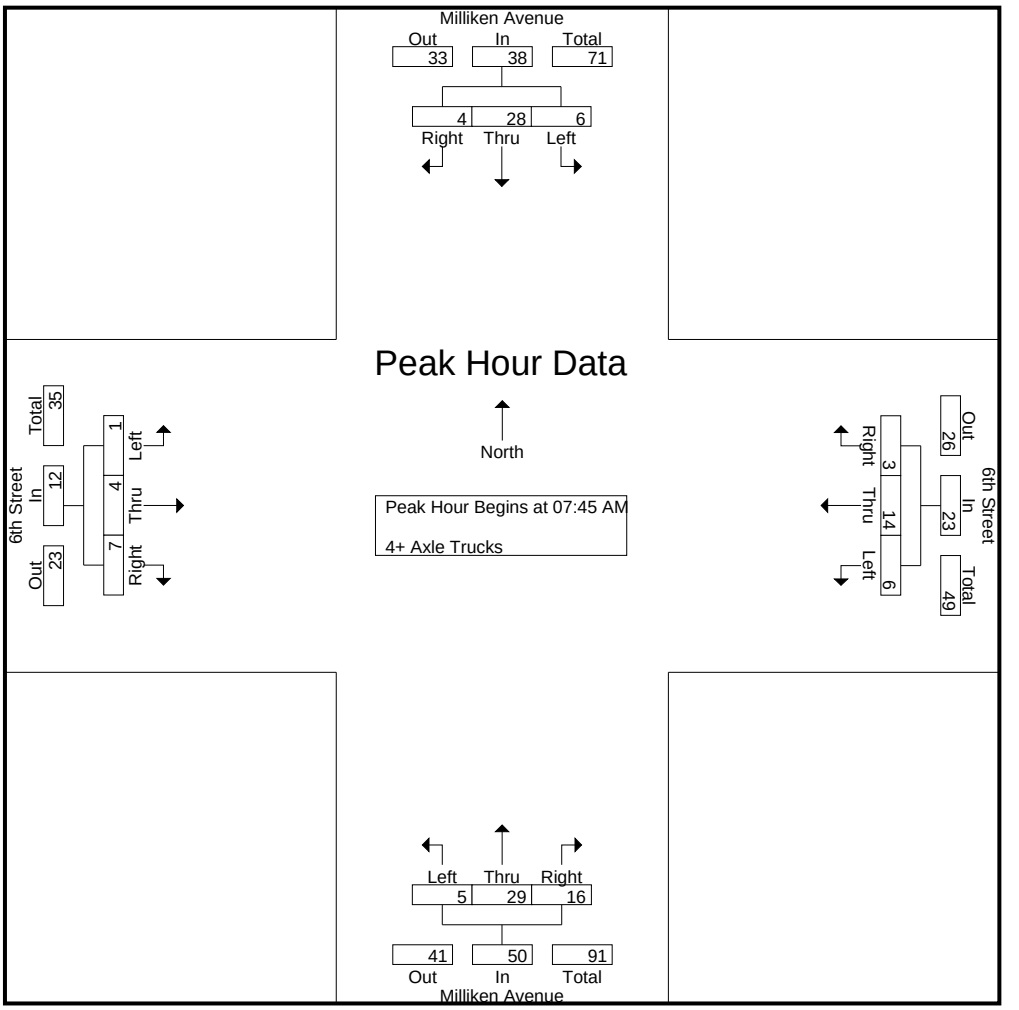

Peak Hour Analysis From 07:45 AM to 08:30 AM - Peak 1 of 1
Peak Hour for Each Approach Begins at:

	07:45 AM				07:45 AM				07:45 AM				07:45 AM			
+0 mins.	1	**9**	**1**	**11**	0	**4**	0	4	**2**	5	2	9	0	0	1	1
+15 mins.	1	4	1	6	**3**	2	0	5	0	**12**	5	**17**	0	1	2	3
+30 mins.	1	8	1	10	0	4	1	5	2	5	**7**	14	0	1	0	1
+45 mins.	**3**	7	1	11	3	4	**2**	**9**	1	7	2	10	**1**	**2**	**4**	**7**
Total Volume	6	28	4	38	6	14	3	23	5	29	16	50	1	4	7	12
% App. Total	15.8	73.7	10.5		26.1	60.9	13		10	58	32		8.3	33.3	58.3	
PHF	.500	.778	1.000	.864	.500	.875	.375	.639	.625	.604	.571	.735	.250	.500	.438	.429

Counts Unlimited, Inc.
PO Box 1178
Corona, CA 92878
(951)268-6268

City of Rancho Cucamonga
N/S: Milliken Avenue
E/W: 6th Street
Weather: Clear

File Name : 09_RNC_Mil_6th PM
Site Code : 00322818
Start Date : 9/20/2022

Groups Printed- Passenger Vehicles - Large 2 Axle Vehicles - 3 Axle Vehicles - 4+ Axle Trucks

	Milliken Avenue Southbound				6th Street Westbound				Milliken Avenue Northbound				6th Street Eastbound				
Start Time	Left	Thru	Right	App. Total	Left	Thru	Right	App. Total	Left	Thru	Right	App. Total	Left	Thru	Right	App. Total	Int. Total
04:00 PM	26	150	24	200	18	67	35	120	32	302	21	355	75	113	37	225	900
04:15 PM	38	179	26	243	14	53	31	98	31	299	22	352	67	90	40	197	890
04:30 PM	22	195	28	245	25	62	40	127	39	304	20	363	84	110	39	233	968
04:45 PM	36	170	40	246	12	45	35	92	34	296	20	350	59	76	34	169	857
Total	122	694	118	934	69	227	141	437	136	1201	83	1420	285	389	150	824	3615
05:00 PM	48	180	25	253	23	90	53	166	35	287	14	336	99	157	46	302	1057
05:15 PM	45	180	29	254	10	58	33	101	34	341	25	400	115	96	36	247	1002
05:30 PM	28	134	24	186	16	65	40	121	35	309	29	373	85	95	32	212	892
05:45 PM	29	155	20	204	21	60	29	110	18	302	15	335	77	95	19	191	840
Total	150	649	98	897	70	273	155	498	122	1239	83	1444	376	443	133	952	3791
Grand Total	272	1343	216	1831	139	500	296	935	258	2440	166	2864	661	832	283	1776	7406
Apprch %	14.9	73.3	11.8		14.9	53.5	31.7		9	85.2	5.8		37.2	46.8	15.9		
Total %	3.7	18.1	2.9	24.7	1.9	6.8	4	12.6	3.5	32.9	2.2	38.7	8.9	11.2	3.8	24	
Passenger Vehicles	268	1284	201	1753	121	471	287	879	238	2366	153	2757	652	780	268	1700	7089
% Passenger Vehicles	98.5	95.6	93.1	95.7	87.1	94.2	97	94	92.2	97	92.2	96.3	98.6	93.8	94.7	95.7	95.7
Large 2 Axle Vehicles	3	14	9	26	2	8	3	13	4	19	2	25	3	13	5	21	85
% Large 2 Axle Vehicles	1.1	1	4.2	1.4	1.4	1.6	1	1.4	1.6	0.8	1.2	0.9	0.5	1.6	1.8	1.2	1.1
3 Axle Vehicles	0	3	0	3	1	8	2	11	4	16	2	22	2	9	2	13	49
% 3 Axle Vehicles	0	0.2	0	0.2	0.7	1.6	0.7	1.2	1.6	0.7	1.2	0.8	0.3	1.1	0.7	0.7	0.7
4+ Axle Trucks	1	42	6	49	15	13	4	32	12	39	9	60	4	30	8	42	183
% 4+ Axle Trucks	0.4	3.1	2.8	2.7	10.8	2.6	1.4	3.4	4.7	1.6	5.4	2.1	0.6	3.6	2.8	2.4	2.5

	Milliken Avenue Southbound				6th Street Westbound				Milliken Avenue Northbound				6th Street Eastbound				
Start Time	Left	Thru	Right	App. Total	Left	Thru	Right	App. Total	Left	Thru	Right	App. Total	Left	Thru	Right	App. Total	Int. Total
Peak Hour Analysis From 04:00 PM to 05:45 PM - Peak 1 of 1																	
Peak Hour for Entire Intersection Begins at 04:30 PM																	
04:30 PM	22	**195**	28	245	**25**	62	40	127	**39**	304	20	363	84	110	39	233	968
04:45 PM	36	170	**40**	246	12	45	35	92	34	296	20	350	59	76	34	169	857
05:00 PM	**48**	180	25	253	23	**90**	**53**	**166**	35	287	14	336	99	**157**	**46**	**302**	**1057**
05:15 PM	45	180	29	**254**	10	58	33	101	34	**341**	**25**	**400**	**115**	96	36	247	1002
Total Volume	151	725	122	998	70	255	161	486	142	1228	79	1449	357	439	155	951	3884
% App. Total	15.1	72.6	12.2		14.4	52.5	33.1		9.8	84.7	5.5		37.5	46.2	16.3		
PHF	.786	.929	.763	.982	.700	.708	.759	.732	.910	.900	.790	.906	.776	.699	.842	.787	.919

Counts Unlimited, Inc.
PO Box 1178
Corona, CA 92878
(951)268-6268

City of Rancho Cucamonga
N/S: Milliken Avenue
E/W: 6th Street
Weather: Clear

File Name : 09_RNC_Mil_6th PM
Site Code : 00322818
Start Date : 9/20/2022
Page No : 2

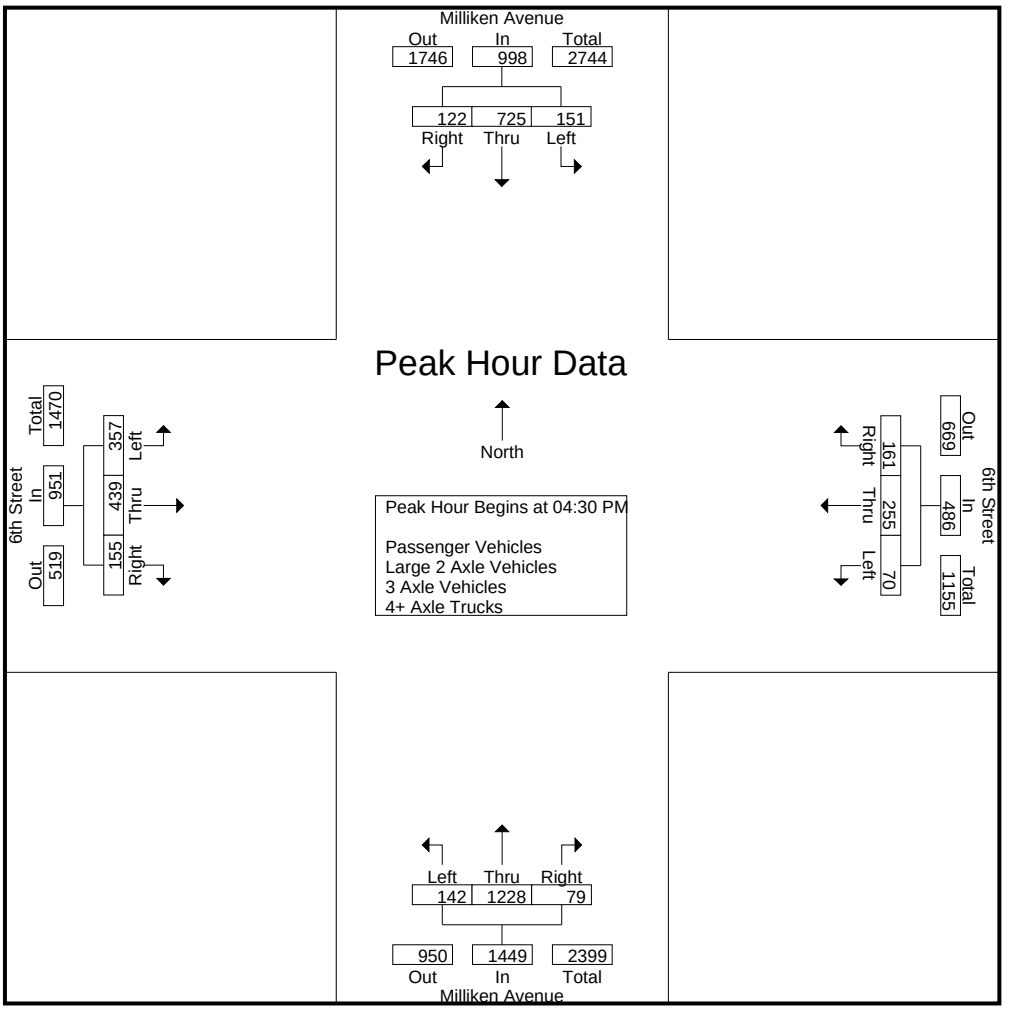

Peak Hour Analysis From 04:00 PM to 05:45 PM - Peak 1 of 1
Peak Hour for Each Approach Begins at:

	04:30 PM				05:00 PM				04:45 PM				05:00 PM			
+0 mins.	22	**195**	28	245	**23**	**90**	**53**	**166**	34	296	20	350	99	**157**	**46**	**302**
+15 mins.	36	170	**40**	246	10	58	33	101	**35**	287	14	336	**115**	96	36	247
+30 mins.	**48**	180	25	253	16	65	40	121	34	**341**	25	**400**	85	95	32	212
+45 mins.	45	180	29	**254**	21	60	29	110	35	309	**29**	373	77	95	19	191
Total Volume	151	725	122	998	70	273	155	498	138	1233	88	1459	376	443	133	952
% App. Total	15.1	72.6	12.2		14.1	54.8	31.1		9.5	84.5	6		39.5	46.5	14	
PHF	.786	.929	.763	.982	.761	.758	.731	.750	.986	.904	.759	.912	.817	.705	.723	.788

Counts Unlimited, Inc.
PO Box 1178
Corona, CA 92878
(951)268-6268

City of Rancho Cucamonga
N/S: Milliken Avenue
E/W: 6th Street
Weather: Clear

File Name : 09_RNC_Mil_6th PM
Site Code : 00322818
Start Date : 9/20/2022
Page No : 1

Groups Printed- Passenger Vehicles

	Milliken Avenue Southbound				6th Street Westbound				Milliken Avenue Northbound				6th Street Eastbound				
Start Time	Left	Thru	Right	App. Total	Left	Thru	Right	App. Total	Left	Thru	Right	App. Total	Left	Thru	Right	App. Total	Int. Total
04:00 PM	26	142	22	190	13	60	34	107	28	289	19	336	75	102	37	214	847
04:15 PM	37	175	22	234	12	50	31	93	28	290	20	338	65	87	34	186	851
04:30 PM	22	187	27	236	25	60	36	121	37	289	18	344	83	101	37	221	922
04:45 PM	35	159	37	231	9	43	34	86	30	290	19	339	56	69	30	155	811
Total	120	663	108	891	59	213	135	407	123	1158	76	1357	279	359	138	776	3431
05:00 PM	48	168	24	240	19	83	52	154	35	278	14	327	98	153	45	296	1017
05:15 PM	45	177	28	250	9	55	32	96	30	335	22	387	115	91	35	241	974
05:30 PM	26	126	21	173	15	62	39	116	33	305	27	365	83	90	32	205	859
05:45 PM	29	150	20	199	19	58	29	106	17	290	14	321	77	87	18	182	808
Total	148	621	93	862	62	258	152	472	115	1208	77	1400	373	421	130	924	3658
Grand Total	268	1284	201	1753	121	471	287	879	238	2366	153	2757	652	780	268	1700	7089
Apprch %	15.3	73.2	11.5		13.8	53.6	32.7		8.6	85.8	5.5		38.4	45.9	15.8		
Total %	3.8	18.1	2.8	24.7	1.7	6.6	4	12.4	3.4	33.4	2.2	38.9	9.2	11	3.8	24	

	Milliken Avenue Southbound				6th Street Westbound				Milliken Avenue Northbound				6th Street Eastbound				
Start Time	Left	Thru	Right	App. Total	Left	Thru	Right	App. Total	Left	Thru	Right	App. Total	Left	Thru	Right	App. Total	Int. Total
Peak Hour Analysis From 04:30 PM to 05:15 PM - Peak 1 of 1																	
Peak Hour for Entire Intersection Begins at 04:30 PM																	
04:30 PM	22	**187**	27	236	**25**	60	36	121	**37**	289	18	344	83	101	37	221	922
04:45 PM	35	159	**37**	231	9	43	34	86	30	290	19	339	56	69	30	155	811
05:00 PM	**48**	168	24	240	19	**83**	**52**	**154**	35	278	14	327	98	**153**	**45**	**296**	**1017**
05:15 PM	45	177	28	**250**	9	55	32	96	30	**335**	**22**	**387**	**115**	91	35	241	974
Total Volume	150	691	116	957	62	241	154	457	132	1192	73	1397	352	414	147	913	3724
% App. Total	15.7	72.2	12.1		13.6	52.7	33.7		9.4	85.3	5.2		38.6	45.3	16.1		
PHF	.781	.924	.784	.957	.620	.726	.740	.742	.892	.890	.830	.902	.765	.676	.817	.771	.915

Counts Unlimited, Inc.
PO Box 1178
Corona, CA 92878
(951)268-6268

City of Rancho Cucamonga
N/S: Milliken Avenue
E/W: 6th Street
Weather: Clear

File Name : 09_RNC_Mil_6th PM
Site Code : 00322818
Start Date : 9/20/2022
Page No : 2

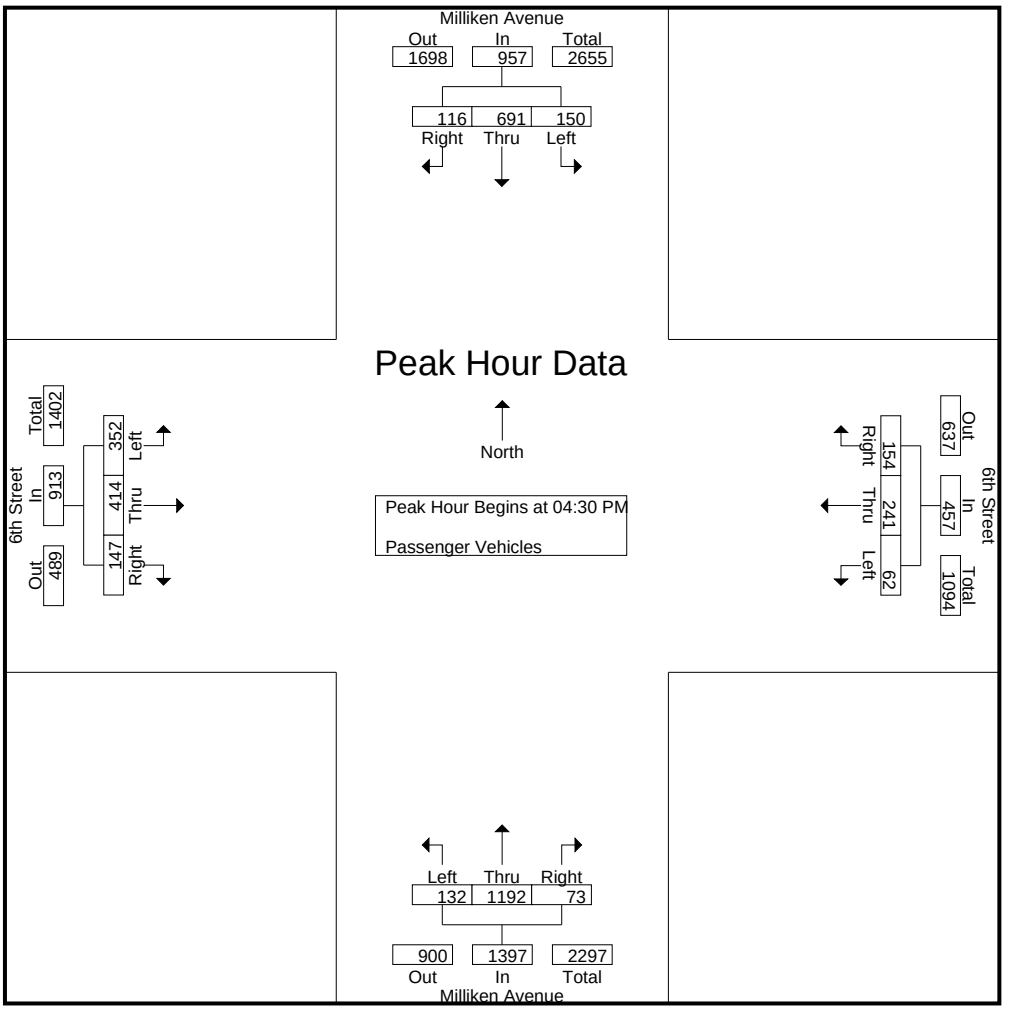

Peak Hour Analysis From 04:30 PM to 05:15 PM - Peak 1 of 1
Peak Hour for Each Approach Begins at:

	04:30 PM				04:30 PM				04:30 PM				04:30 PM			
+0 mins.	22	**187**	27	236	**25**	60	36	121	**37**	289	18	344	83	101	37	221
+15 mins.	35	159	**37**	231	9	43	34	86	30	290	19	339	56	69	30	155
+30 mins.	**48**	168	24	240	19	**83**	**52**	**154**	35	278	14	327	98	**153**	**45**	**296**
+45 mins.	45	177	28	**250**	9	55	32	96	30	**335**	**22**	**387**	**115**	91	35	241
Total Volume	150	691	116	957	62	241	154	457	132	1192	73	1397	352	414	147	913
% App. Total	15.7	72.2	12.1		13.6	52.7	33.7		9.4	85.3	5.2		38.6	45.3	16.1	
PHF	.781	.924	.784	.957	.620	.726	.740	.742	.892	.890	.830	.902	.765	.676	.817	.771

Counts Unlimited, Inc.
PO Box 1178
Corona, CA 92878
(951)268-6268

City of Rancho Cucamonga
N/S: Milliken Avenue
E/W: 6th Street
Weather: Clear

File Name : 09_RNC_Mil_6th PM
Site Code : 00322818
Start Date : 9/20/2022
Page No : 1

Groups Printed- Large 2 Axle Vehicles

	Milliken Avenue Southbound				6th Street Westbound				Milliken Avenue Northbound				6th Street Eastbound				
Start Time	Left	Thru	Right	App. Total	Left	Thru	Right	App. Total	Left	Thru	Right	App. Total	Left	Thru	Right	App. Total	Int. Total
04:00 PM	0	1	1	2	1	1	0	2	1	3	0	4	0	1	0	1	9
04:15 PM	1	1	1	3	0	1	0	1	0	1	0	1	1	3	2	6	11
04:30 PM	0	3	1	4	0	0	0	0	0	5	1	6	1	3	1	5	15
04:45 PM	0	2	3	5	0	1	1	2	2	2	0	4	1	0	1	2	13
Total	1	7	6	14	1	3	1	5	3	11	1	15	3	7	4	14	48
05:00 PM	0	2	0	2	0	1	1	2	0	3	0	3	0	0	1	1	8
05:15 PM	0	1	1	2	0	3	0	3	0	3	0	3	0	1	0	1	9
05:30 PM	2	2	2	6	0	1	1	2	0	0	1	1	0	3	0	3	12
05:45 PM	0	2	0	2	1	0	0	1	1	2	0	3	0	2	0	2	8
Total	2	7	3	12	1	5	2	8	1	8	1	10	0	6	1	7	37
Grand Total	3	14	9	26	2	8	3	13	4	19	2	25	3	13	5	21	85
Apprch %	11.5	53.8	34.6		15.4	61.5	23.1		16	76	8		14.3	61.9	23.8		
Total %	3.5	16.5	10.6	30.6	2.4	9.4	3.5	15.3	4.7	22.4	2.4	29.4	3.5	15.3	5.9	24.7	

	Milliken Avenue Southbound				6th Street Westbound				Milliken Avenue Northbound				6th Street Eastbound				
Start Time	Left	Thru	Right	App. Total	Left	Thru	Right	App. Total	Left	Thru	Right	App. Total	Left	Thru	Right	App. Total	Int. Total
Peak Hour Analysis From 04:30 PM to 05:15 PM - Peak 1 of 1																	
Peak Hour for Entire Intersection Begins at 04:30 PM																	
04:30 PM	0	**3**	1	4	0	0	0	0	0	**5**	**1**	**6**	**1**	**3**	**1**	**5**	**15**
04:45 PM	0	2	**3**	**5**	0	1	**1**	2	**2**	2	0	4	1	0	1	2	13
05:00 PM	0	2	0	2	0	1	1	2	0	3	0	3	0	0	1	1	8
05:15 PM	0	1	1	2	0	**3**	0	**3**	0	3	0	3	0	1	0	1	9
Total Volume	0	8	5	13	0	5	2	7	2	13	1	16	2	4	3	9	45
% App. Total	0	61.5	38.5		0	71.4	28.6		12.5	81.2	6.2		22.2	44.4	33.3		
PHF	.000	.667	.417	.650	.000	.417	.500	.583	.250	.650	.250	.667	.500	.333	.750	.450	.750

Counts Unlimited, Inc.
PO Box 1178
Corona, CA 92878
(951)268-6268

City of Rancho Cucamonga
N/S: Milliken Avenue
E/W: 6th Street
Weather: Clear

File Name : 09_RNC_Mil_6th PM
Site Code : 00322818
Start Date : 9/20/2022
Page No : 2

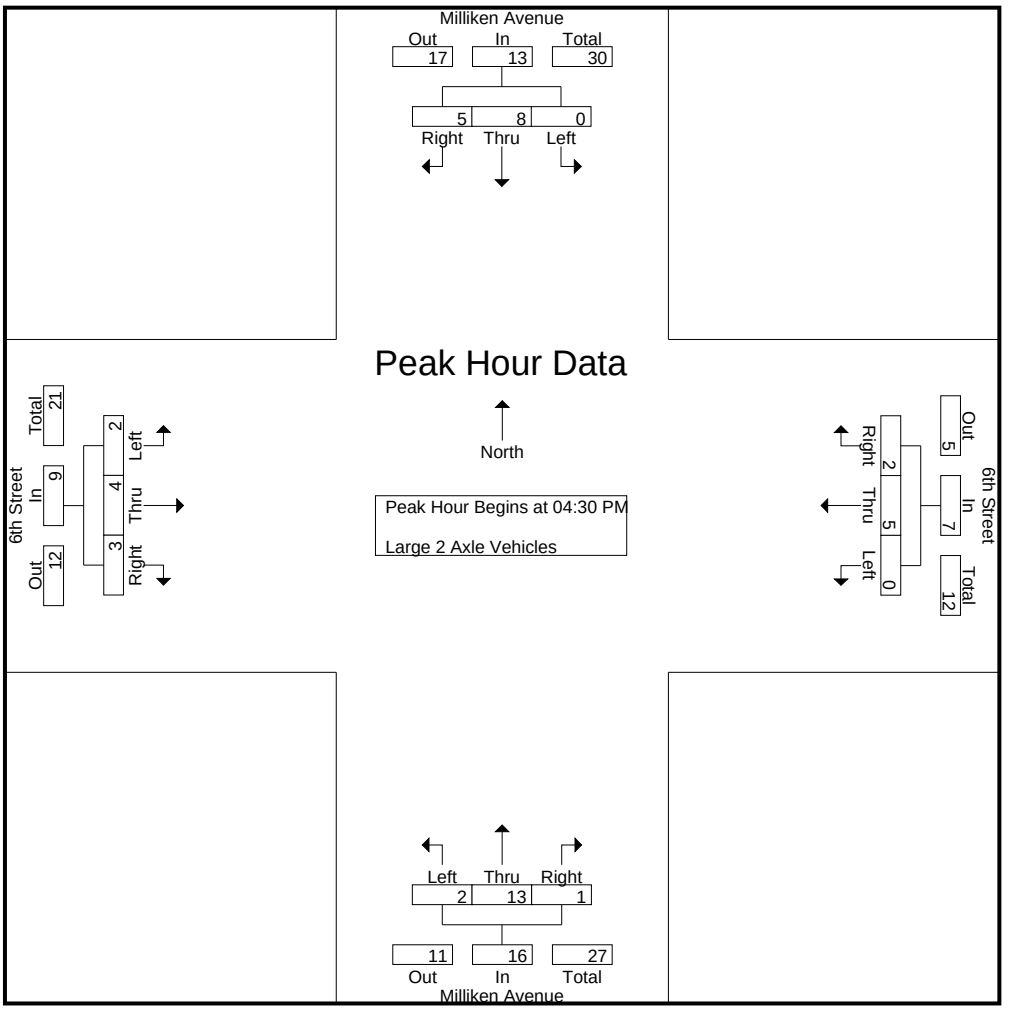

Peak Hour Analysis From 04:30 PM to 05:15 PM - Peak 1 of 1
Peak Hour for Each Approach Begins at:

	04:30 PM				04:30 PM				04:30 PM				04:30 PM			
+0 mins.	0	**3**	1	4	0	0	0	0	0	**5**	**1**	**6**	**1**	**3**	**1**	**5**
+15 mins.	0	2	**3**	**5**	0	1	**1**	2	**2**	2	0	4	1	0	1	2
+30 mins.	0	2	0	2	0	1	1	2	0	3	0	3	0	0	1	1
+45 mins.	0	1	1	2	0	**3**	0	**3**	0	3	0	3	0	1	0	1
Total Volume	0	8	5	13	0	5	2	7	2	13	1	16	2	4	3	9
% App. Total	0	61.5	38.5		0	71.4	28.6		12.5	81.2	6.2		22.2	44.4	33.3	
PHF	.000	.667	.417	.650	.000	.417	.500	.583	.250	.650	.250	.667	.500	.333	.750	.450

Counts Unlimited, Inc.
PO Box 1178
Corona, CA 92878
(951)268-6268

City of Rancho Cucamonga
N/S: Milliken Avenue
E/W: 6th Street
Weather: Clear

File Name : 09_RNC_Mil_6th PM
Site Code : 00322818
Start Date : 9/20/2022
Page No : 1

Groups Printed- 3 Axle Vehicles

	Milliken Avenue Southbound				6th Street Westbound				Milliken Avenue Northbound				6th Street Eastbound				
Start Time	Left	Thru	Right	App. Total	Left	Thru	Right	App. Total	Left	Thru	Right	App. Total	Left	Thru	Right	App. Total	Int. Total
04:00 PM	0	0	0	0	0	3	0	3	0	4	0	4	0	2	0	2	9
04:15 PM	0	0	0	0	0	1	0	1	0	2	1	3	0	0	1	1	5
04:30 PM	0	0	0	0	0	0	1	1	0	3	0	3	0	2	0	2	6
04:45 PM	0	2	0	2	0	1	0	1	1	2	0	3	0	1	0	1	7
Total	0	2	0	2	0	5	1	6	1	11	1	13	0	5	1	6	27
05:00 PM	0	0	0	0	1	2	0	3	0	1	0	1	1	2	0	3	7
05:15 PM	0	0	0	0	0	0	1	1	2	1	1	4	0	0	0	0	5
05:30 PM	0	0	0	0	0	1	0	1	1	0	0	1	1	1	0	2	4
05:45 PM	0	1	0	1	0	0	0	0	0	3	0	3	0	1	1	2	6
Total	0	1	0	1	1	3	1	5	3	5	1	9	2	4	1	7	22
Grand Total	0	3	0	3	1	8	2	11	4	16	2	22	2	9	2	13	49
Apprch %	0	100	0		9.1	72.7	18.2		18.2	72.7	9.1		15.4	69.2	15.4		
Total %	0	6.1	0	6.1	2	16.3	4.1	22.4	8.2	32.7	4.1	44.9	4.1	18.4	4.1	26.5	

	Milliken Avenue Southbound				6th Street Westbound				Milliken Avenue Northbound				6th Street Eastbound				
Start Time	Left	Thru	Right	App. Total	Left	Thru	Right	App. Total	Left	Thru	Right	App. Total	Left	Thru	Right	App. Total	Int. Total
Peak Hour Analysis From 04:30 PM to 05:15 PM - Peak 1 of 1																	
Peak Hour for Entire Intersection Begins at 04:30 PM																	
04:30 PM	0	0	0	0	0	0	**1**	1	0	**3**	0	3	0	**2**	0	2	6
04:45 PM	0	**2**	0	**2**	0	1	0	1	1	2	0	3	0	1	0	1	**7**
05:00 PM	0	0	0	0	**1**	**2**	0	**3**	0	1	0	1	**1**	2	0	**3**	7
05:15 PM	0	0	0	0	0	0	1	1	**2**	1	**1**	**4**	0	0	0	0	5
Total Volume	0	2	0	2	1	3	2	6	3	7	1	11	1	5	0	6	25
% App. Total	0	100	0		16.7	50	33.3		27.3	63.6	9.1		16.7	83.3	0		
PHF	.000	.250	.000	.250	.250	.375	.500	.500	.375	.583	.250	.688	.250	.625	.000	.500	.893

Counts Unlimited, Inc.
PO Box 1178
Corona, CA 92878
(951)268-6268

City of Rancho Cucamonga
N/S: Milliken Avenue
E/W: 6th Street
Weather: Clear

File Name : 09_RNC_Mil_6th PM
Site Code : 00322818
Start Date : 9/20/2022
Page No : 2

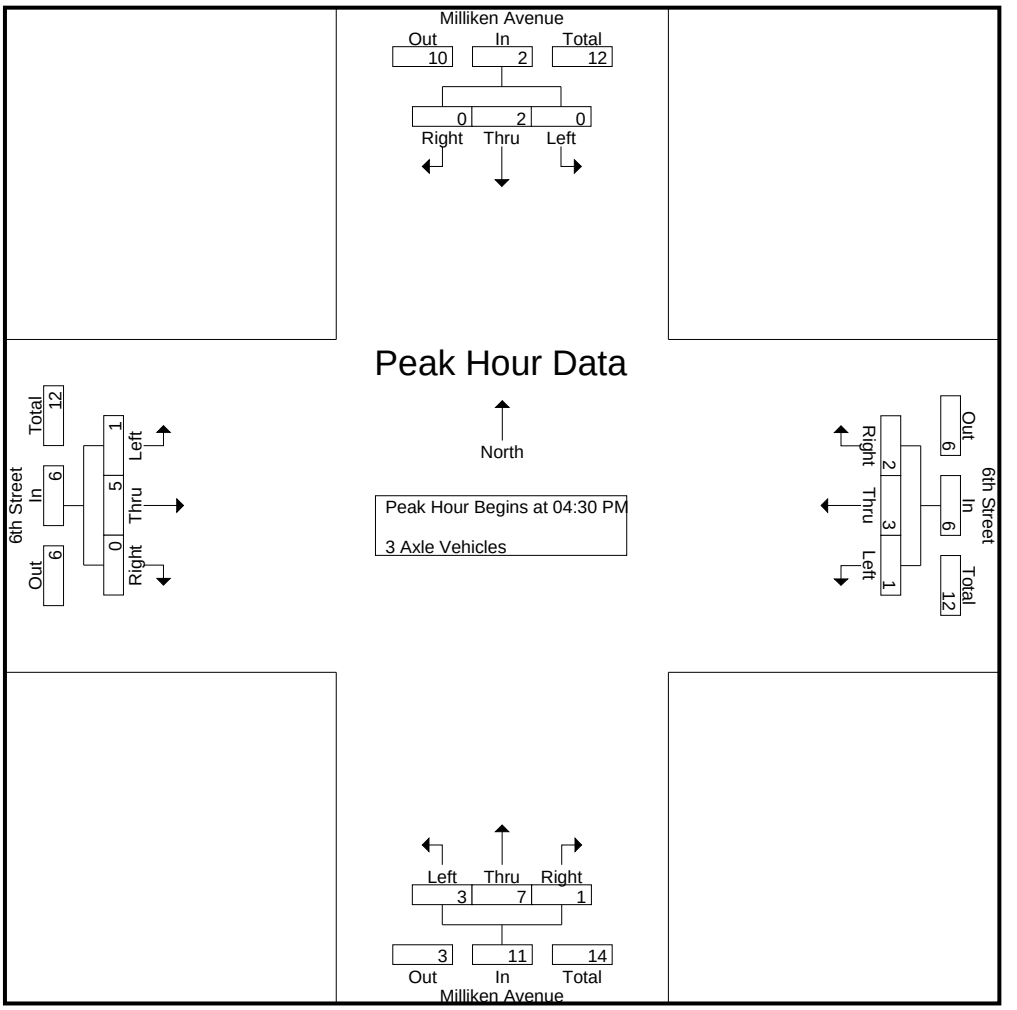

Peak Hour Analysis From 04:30 PM to 05:15 PM - Peak 1 of 1
Peak Hour for Each Approach Begins at:

	04:30 PM				04:30 PM				04:30 PM				04:30 PM			
+0 mins.	0	0	0	0	0	0	**1**	1	0	**3**	0	3	0	**2**	0	2
+15 mins.	0	**2**	0	**2**	0	1	0	1	1	2	0	3	0	1	0	1
+30 mins.	0	0	0	0	**1**	**2**	0	**3**	0	1	0	1	**1**	2	0	**3**
+45 mins.	0	0	0	0	0	0	1	1	**2**	1	**1**	**4**	0	0	0	0
Total Volume	0	2	0	2	1	3	2	6	3	7	1	11	1	5	0	6
% App. Total	0	100	0		16.7	50	33.3		27.3	63.6	9.1		16.7	83.3	0	
PHF	.000	.250	.000	.250	.250	.375	.500	.500	.375	.583	.250	.688	.250	.625	.000	.500

Counts Unlimited, Inc.
PO Box 1178
Corona, CA 92878
(951)268-6268

City of Rancho Cucamonga
N/S: Milliken Avenue
E/W: 6th Street
Weather: Clear

File Name : 09_RNC_Mil_6th PM
Site Code : 00322818
Start Date : 9/20/2022
Page No : 1

Groups Printed- 4+ Axle Trucks

	Milliken Avenue Southbound				6th Street Westbound				Milliken Avenue Northbound				6th Street Eastbound				
Start Time	Left	Thru	Right	App. Total	Left	Thru	Right	App. Total	Left	Thru	Right	App. Total	Left	Thru	Right	App. Total	Int. Total
04:00 PM	0	7	1	8	4	3	1	8	3	6	2	11	0	8	0	8	35
04:15 PM	0	3	3	6	2	1	0	3	3	6	1	10	1	0	3	4	23
04:30 PM	0	5	0	5	0	2	3	5	2	7	1	10	0	4	1	5	25
04:45 PM	1	7	0	8	3	0	0	3	1	2	1	4	2	6	3	11	26
Total	1	22	4	27	9	6	4	19	9	21	5	35	3	18	7	28	109
05:00 PM	0	10	1	11	3	4	0	7	0	5	0	5	0	2	0	2	25
05:15 PM	0	2	0	2	1	0	0	1	2	2	2	6	0	4	1	5	14
05:30 PM	0	6	1	7	1	1	0	2	1	4	1	6	1	1	0	2	17
05:45 PM	0	2	0	2	1	2	0	3	0	7	1	8	0	5	0	5	18
Total	0	20	2	22	6	7	0	13	3	18	4	25	1	12	1	14	74
Grand Total	1	42	6	49	15	13	4	32	12	39	9	60	4	30	8	42	183
Apprch %	2	85.7	12.2		46.9	40.6	12.5		20	65	15		9.5	71.4	19		
Total %	0.5	23	3.3	26.8	8.2	7.1	2.2	17.5	6.6	21.3	4.9	32.8	2.2	16.4	4.4	23	

	Milliken Avenue Southbound				6th Street Westbound				Milliken Avenue Northbound				6th Street Eastbound				
Start Time	Left	Thru	Right	App. Total	Left	Thru	Right	App. Total	Left	Thru	Right	App. Total	Left	Thru	Right	App. Total	Int. Total
Peak Hour Analysis From 04:30 PM to 05:15 PM - Peak 1 of 1																	
Peak Hour for Entire Intersection Begins at 04:30 PM																	
04:30 PM	0	5	0	5	0	2	**3**	5	**2**	**7**	1	**10**	0	4	1	5	25
04:45 PM	**1**	7	0	8	**3**	0	0	3	1	2	1	4	**2**	**6**	**3**	**11**	**26**
05:00 PM	0	**10**	**1**	**11**	3	**4**	0	**7**	0	5	0	5	0	2	0	2	25
05:15 PM	0	2	0	2	1	0	0	1	2	2	**2**	6	0	4	1	5	14
Total Volume	1	24	1	26	7	6	3	16	5	16	4	25	2	16	5	23	90
% App. Total	3.8	92.3	3.8		43.8	37.5	18.8		20	64	16		8.7	69.6	21.7		
PHF	.250	.600	.250	.591	.583	.375	.250	.571	.625	.571	.500	.625	.250	.667	.417	.523	.865

Counts Unlimited, Inc.
PO Box 1178
Corona, CA 92878
(951)268-6268

City of Rancho Cucamonga
N/S: Milliken Avenue
E/W: 6th Street
Weather: Clear

File Name : 09_RNC_Mil_6th PM
Site Code : 00322818
Start Date : 9/20/2022
Page No : 2

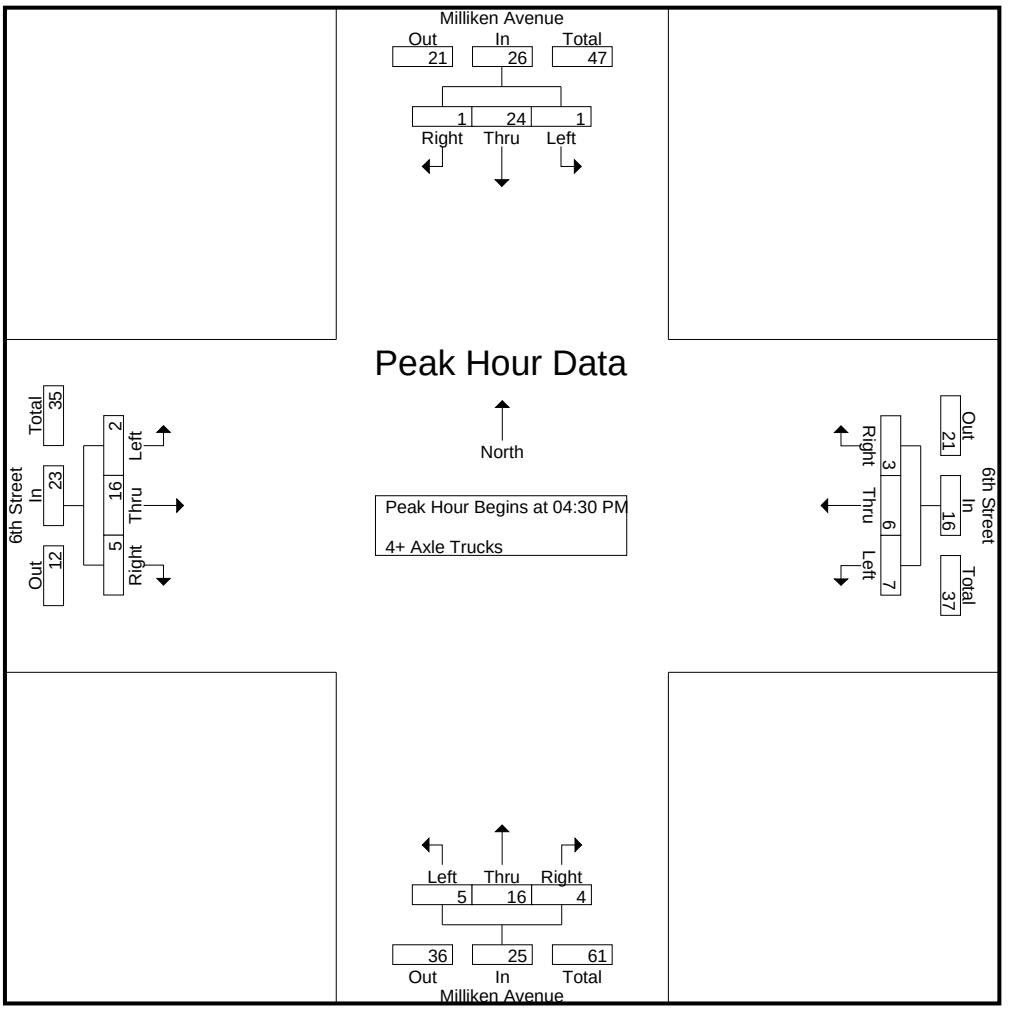

Peak Hour Analysis From 04:30 PM to 05:15 PM - Peak 1 of 1
Peak Hour for Each Approach Begins at:

	04:30 PM				04:30 PM				04:30 PM				04:30 PM			
+0 mins.	0	5	0	5	0	2	**3**	5	**2**	**7**	1	**10**	0	4	1	5
+15 mins.	**1**	7	0	8	**3**	0	0	3	1	2	1	4	**2**	**6**	**3**	**11**
+30 mins.	0	**10**	**1**	**11**	3	**4**	0	**7**	0	5	0	5	0	2	0	2
+45 mins.	0	2	0	2	1	0	0	1	2	2	**2**	6	0	4	1	5
Total Volume	1	24	1	26	7	6	3	16	5	16	4	25	2	16	5	23
% App. Total	3.8	92.3	3.8		43.8	37.5	18.8		20	64	16		8.7	69.6	21.7	
PHF	.250	.600	.250	.591	.583	.375	.250	.571	.625	.571	.500	.625	.250	.667	.417	.523

Location: Rancho Cucamonga
N/S: Milliken Avenue
E/W: 6th Street

Date: 9/20/2022
Day: Tuesday

PEDESTRIANS

	North Leg Milliken Avenue	East Leg 6th Street	South Leg Milliken Avenue	West Leg 6th Street	
	Pedestrians	Pedestrians	Pedestrians	Pedestrians	
7:00 AM	0	0	0	2	2
7:15 AM	0	2	3	0	5
7:30 AM	0	0	0	2	2
7:45 AM	1	0	0	1	2
8:00 AM	0	0	0	0	0
8:15 AM	0	0	0	0	0
8:30 AM	0	0	0	0	0
8:45 AM	0	0	0	0	0
TOTAL VOLUMES:	1	2	3	5	11

	North Leg Milliken Avenue	East Leg 6th Street	South Leg Milliken Avenue	West Leg 6th Street	
	Pedestrians	Pedestrians	Pedestrians	Pedestrians	
4:00 PM	1	1	1	0	3
4:15 PM	0	0	0	1	1
4:30 PM	0	0	0	3	3
4:45 PM	0	0	0	1	1
5:00 PM	0	0	1	3	4
5:15 PM	0	1	0	0	1
5:30 PM	0	0	0	1	1
5:45 PM	0	1	0	4	5
TOTAL VOLUMES:	1	3	2	13	19

Counts Unlimited, Inc.
PO Box 1178
Corona, CA 92878
951-268-6268

Location: Rancho Cucamonga
N/S: Milliken Avenue
E/W: 6th Street

Date: 9/20/2022
Day: Tuesday

BICYCLES

	Southbound Milliken Avenue			Westbound 6th Street			Northbound Milliken Avenue			Eastbound 6th Street			
	Left	Thru	Right	Left	Thru	Right	Left	Thru	Right	Left	Thru	Right	
7:00 AM	0	0	0	0	0	0	0	0	0	0	0	0	0
7:15 AM	0	0	0	0	0	0	0	0	0	0	0	0	0
7:30 AM	0	0	0	0	0	0	0	0	0	0	0	0	0
7:45 AM	0	0	0	0	1	0	0	0	0	0	0	0	1
8:00 AM	0	0	0	0	0	0	0	0	0	0	0	0	0
8:15 AM	0	0	0	0	0	0	0	0	0	0	0	0	0
8:30 AM	0	0	0	0	0	0	0	0	0	0	0	0	0
8:45 AM	0	0	0	0	0	0	0	0	0	0	0	0	0
TOTAL VOLUMES:	0	0	0	0	1	0	0	0	0	0	0	0	1

	Southbound Milliken Avenue			Westbound 6th Street			Northbound Milliken Avenue			Eastbound 6th Street			
	Left	Thru	Right	Left	Thru	Right	Left	Thru	Right	Left	Thru	Right	
4:00 PM	0	0	0	0	0	0	0	1	0	0	0	0	1
4:15 PM	0	0	0	0	0	0	0	1	0	0	0	0	1
4:30 PM	0	0	0	0	0	0	0	0	0	0	0	0	0
4:45 PM	0	0	0	0	0	0	0	1	0	0	0	0	1
5:00 PM	0	0	0	0	0	0	0	0	0	0	0	0	0
5:15 PM	0	0	0	0	0	0	0	0	0	0	0	0	0
5:30 PM	0	0	0	0	0	0	0	1	0	0	0	0	1
5:45 PM	0	0	0	0	0	0	0	2	0	0	0	0	2
TOTAL VOLUMES:	0	0	0	0	0	0	0	6	0	0	0	0	6

Counts Unlimited, Inc.
PO Box 1178
Corona, CA 92878
951-268-6268

Counts Unlimited, Inc.
PO Box 1178
Corona, CA 92878
(951)268-6268

City of Rancho Cucamonga
N/S: Milliken Avenue
E/W: Fourth Street
Weather: Clear

File Name : 10_RNC_Mil_4th AM
Site Code : 00322818
Start Date : 9/20/2022
Page No : 1

Groups Printed- Passenger Vehicles - Large 2 Axle Vehicles - 3 Axle Vehicles - 4+ Axle Trucks

	Milliken Avenue Southbound				Fourth Street Westbound				Milliken Avenue Northbound				Fourth Street Eastbound				
Start Time	Left	Thru	Right	App. Total	Left	Thru	Right	App. Total	Left	Thru	Right	App. Total	Left	Thru	Right	App. Total	Int. Total
07:00 AM	23	92	11	126	91	158	45	294	20	93	17	130	18	53	21	92	642
07:15 AM	42	124	9	175	65	170	60	295	39	101	27	167	20	52	23	95	732
07:30 AM	29	131	7	167	100	223	44	367	50	143	23	216	25	73	33	131	881
07:45 AM	38	190	11	239	87	244	87	418	49	210	17	276	28	59	28	115	1048
Total	132	537	38	707	343	795	236	1374	158	547	84	789	91	237	105	433	3303
08:00 AM	36	169	22	227	103	204	63	370	36	113	21	170	23	54	26	103	870
08:15 AM	23	177	14	214	96	213	68	377	33	150	21	204	23	60	33	116	911
08:30 AM	37	159	19	215	83	181	68	332	41	155	38	234	36	55	27	118	899
08:45 AM	45	174	15	234	84	173	74	331	19	137	14	170	25	60	29	114	849
Total	141	679	70	890	366	771	273	1410	129	555	94	778	107	229	115	451	3529
Grand Total	273	1216	108	1597	709	1566	509	2784	287	1102	178	1567	198	466	220	884	6832
Apprch %	17.1	76.1	6.8		25.5	56.2	18.3		18.3	70.3	11.4		22.4	52.7	24.9		
Total %	4	17.8	1.6	23.4	10.4	22.9	7.5	40.7	4.2	16.1	2.6	22.9	2.9	6.8	3.2	12.9	
Passenger Vehicles	257	1114	105	1476	664	1515	490	2669	271	984	155	1410	190	444	209	843	6398
% Passenger Vehicles	94.1	91.6	97.2	92.4	93.7	96.7	96.3	95.9	94.4	89.3	87.1	90	96	95.3	95	95.4	93.6
Large 2 Axle Vehicles	4	20	2	26	22	19	5	46	8	29	8	45	5	14	8	27	144
% Large 2 Axle Vehicles	1.5	1.6	1.9	1.6	3.1	1.2	1	1.7	2.8	2.6	4.5	2.9	2.5	3	3.6	3.1	2.1
3 Axle Vehicles	1	18	0	19	5	9	1	15	3	13	2	18	0	1	1	2	54
% 3 Axle Vehicles	0.4	1.5	0	1.2	0.7	0.6	0.2	0.5	1	1.2	1.1	1.1	0	0.2	0.5	0.2	0.8
4+ Axle Trucks	11	64	1	76	18	23	13	54	5	76	13	94	3	7	2	12	236
% 4+ Axle Trucks	4	5.3	0.9	4.8	2.5	1.5	2.6	1.9	1.7	6.9	7.3	6	1.5	1.5	0.9	1.4	3.5

	Milliken Avenue Southbound				Fourth Street Westbound				Milliken Avenue Northbound				Fourth Street Eastbound				
Start Time	Left	Thru	Right	App. Total	Left	Thru	Right	App. Total	Left	Thru	Right	App. Total	Left	Thru	Right	App. Total	Int. Total
Peak Hour Analysis From 07:00 AM to 08:45 AM - Peak 1 of 1																	
Peak Hour for Entire Intersection Begins at 07:45 AM																	
07:45 AM	**38**	**190**	11	**239**	87	**244**	**87**	**418**	**49**	**210**	17	**276**	28	59	28	115	**1048**
08:00 AM	36	169	**22**	227	**103**	204	63	370	36	113	21	170	23	54	26	103	870
08:15 AM	23	177	14	214	96	213	68	377	33	150	21	204	23	**60**	**33**	116	911
08:30 AM	37	159	19	215	83	181	68	332	41	155	**38**	234	**36**	55	27	**118**	899
Total Volume	134	695	66	895	369	842	286	1497	159	628	97	884	110	228	114	452	3728
% App. Total	15	77.7	7.4		24.6	56.2	19.1		18	71	11		24.3	50.4	25.2		
PHF	.882	.914	.750	.936	.896	.863	.822	.895	.811	.748	.638	.801	.764	.950	.864	.958	.889

Counts Unlimited, Inc.
PO Box 1178
Corona, CA 92878
(951)268-6268

City of Rancho Cucamonga
N/S: Milliken Avenue
E/W: Fourth Street
Weather: Clear

File Name : 10_RNC_Mil_4th AM
Site Code : 00322818
Start Date : 9/20/2022
Page No : 2

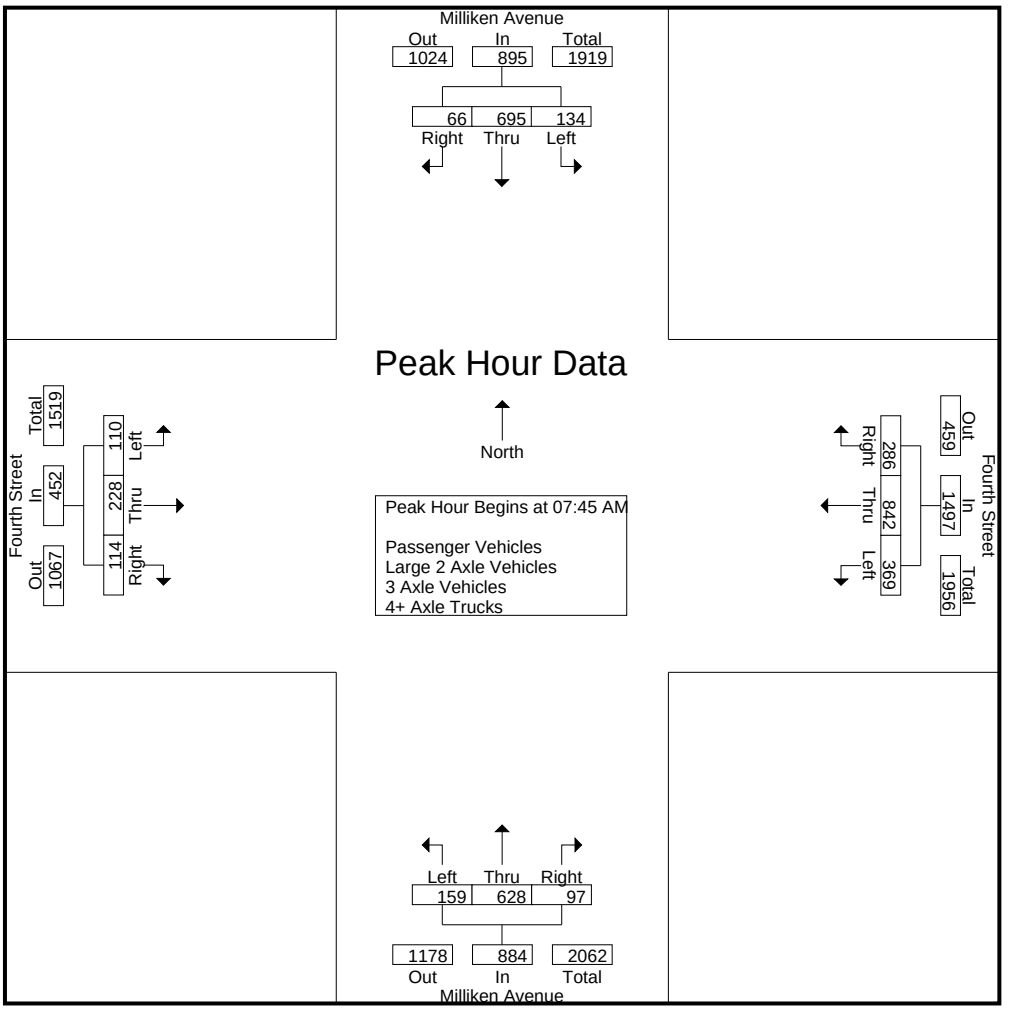

Peak Hour Analysis From 07:00 AM to 08:45 AM - Peak 1 of 1
Peak Hour for Each Approach Begins at:

	07:45 AM				07:30 AM				07:45 AM				07:30 AM			
+0 mins.	**38**	**190**	11	**239**	100	223	44	367	**49**	**210**	17	**276**	25	**73**	**33**	**131**
+15 mins.	36	169	**22**	227	87	**244**	**87**	**418**	36	113	21	170	**28**	59	28	115
+30 mins.	23	177	14	214	**103**	204	63	370	33	150	21	204	23	54	26	103
+45 mins.	37	159	19	215	96	213	68	377	41	155	**38**	234	23	60	33	116
Total Volume	134	695	66	895	386	884	262	1532	159	628	97	884	99	246	120	465
% App. Total	15	77.7	7.4		25.2	57.7	17.1		18	71	11		21.3	52.9	25.8	
PHF	.882	.914	.750	.936	.937	.906	.753	.916	.811	.748	.638	.801	.884	.842	.909	.887

Counts Unlimited, Inc.
PO Box 1178
Corona, CA 92878
(951)268-6268

City of Rancho Cucamonga
N/S: Milliken Avenue
E/W: Fourth Street
Weather: Clear

File Name : 10_RNC_Mil_4th AM
Site Code : 00322818
Start Date : 9/20/2022
Page No : 1

Groups Printed- Passenger Vehicles

	Milliken Avenue Southbound				Fourth Street Westbound				Milliken Avenue Northbound				Fourth Street Eastbound				
Start Time	Left	Thru	Right	App. Total	Left	Thru	Right	App. Total	Left	Thru	Right	App. Total	Left	Thru	Right	App. Total	Int. Total
07:00 AM	22	84	10	116	82	153	42	277	20	82	13	115	17	49	20	86	594
07:15 AM	41	114	8	163	62	162	58	282	34	88	26	148	17	49	22	88	681
07:30 AM	26	116	6	148	95	219	42	356	47	133	21	201	24	71	31	126	831
07:45 AM	35	175	11	221	80	239	85	404	48	190	16	254	28	57	27	112	991
Total	124	489	35	648	319	773	227	1319	149	493	76	718	86	226	100	412	3097
08:00 AM	35	160	22	217	98	199	62	359	35	103	17	155	22	52	26	100	831
08:15 AM	23	168	14	205	91	202	66	359	29	132	20	181	22	58	32	112	857
08:30 AM	34	138	19	191	76	176	65	317	40	137	32	209	36	52	23	111	828
08:45 AM	41	159	15	215	80	165	70	315	18	119	10	147	24	56	28	108	785
Total	133	625	70	828	345	742	263	1350	122	491	79	692	104	218	109	431	3301
Grand Total	257	1114	105	1476	664	1515	490	2669	271	984	155	1410	190	444	209	843	6398
Apprch %	17.4	75.5	7.1		24.9	56.8	18.4		19.2	69.8	11		22.5	52.7	24.8		
Total %	4	17.4	1.6	23.1	10.4	23.7	7.7	41.7	4.2	15.4	2.4	22	3	6.9	3.3	13.2	

	Milliken Avenue Southbound				Fourth Street Westbound				Milliken Avenue Northbound				Fourth Street Eastbound				
Start Time	Left	Thru	Right	App. Total	Left	Thru	Right	App. Total	Left	Thru	Right	App. Total	Left	Thru	Right	App. Total	Int. Total
Peak Hour Analysis From 07:45 AM to 08:30 AM - Peak 1 of 1																	
Peak Hour for Entire Intersection Begins at 07:45 AM																	
07:45 AM	**35**	**175**	11	**221**	80	**239**	**85**	**404**	**48**	**190**	16	**254**	28	57	27	**112**	**991**
08:00 AM	35	160	**22**	217	**98**	199	62	359	35	103	17	155	22	52	26	100	831
08:15 AM	23	168	14	205	91	202	66	359	29	132	20	181	22	**58**	**32**	112	857
08:30 AM	34	138	19	191	76	176	65	317	40	137	**32**	209	**36**	52	23	111	828
Total Volume	127	641	66	834	345	816	278	1439	152	562	85	799	108	219	108	435	3507
% App. Total	15.2	76.9	7.9		24	56.7	19.3		19	70.3	10.6		24.8	50.3	24.8		
PHF	.907	.916	.750	.943	.880	.854	.818	.890	.792	.739	.664	.786	.750	.944	.844	.971	.885

Counts Unlimited, Inc.
PO Box 1178
Corona, CA 92878
(951)268-6268

City of Rancho Cucamonga
N/S: Milliken Avenue
E/W: Fourth Street
Weather: Clear

File Name : 10_RNC_Mil_4th AM
Site Code : 00322818
Start Date : 9/20/2022
Page No : 2

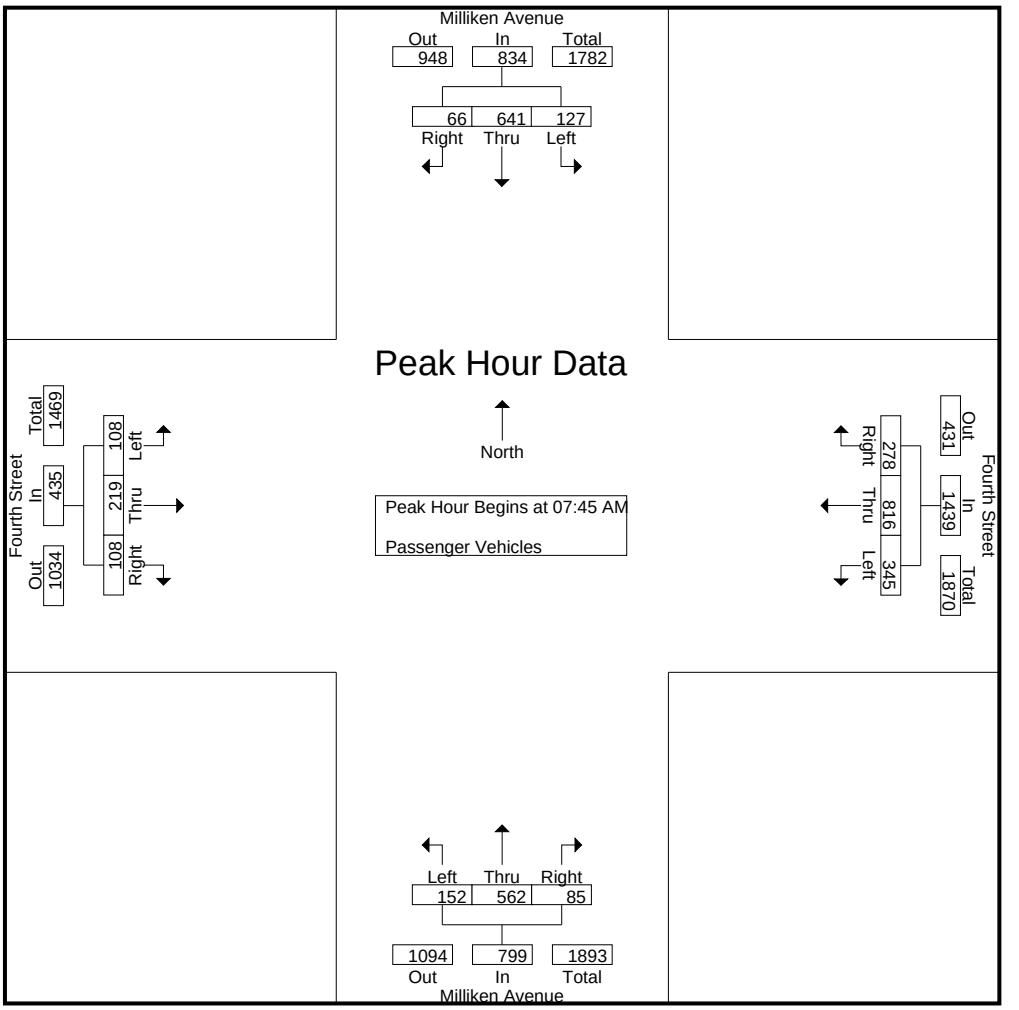

Peak Hour Analysis From 07:45 AM to 08:30 AM - Peak 1 of 1
Peak Hour for Each Approach Begins at:

	07:45 AM				07:45 AM				07:45 AM				07:45 AM			
+0 mins.	**35**	**175**	11	**221**	80	**239**	**85**	**404**	**48**	**190**	16	**254**	28	57	27	**112**
+15 mins.	35	160	**22**	217	**98**	199	62	359	35	103	17	155	22	52	26	100
+30 mins.	23	168	14	205	91	202	66	359	29	132	20	181	22	**58**	**32**	112
+45 mins.	34	138	19	191	76	176	65	317	40	137	**32**	209	**36**	52	23	111
Total Volume	127	641	66	834	345	816	278	1439	152	562	85	799	108	219	108	435
% App. Total	15.2	76.9	7.9		24	56.7	19.3		19	70.3	10.6		24.8	50.3	24.8	
PHF	.907	.916	.750	.943	.880	.854	.818	.890	.792	.739	.664	.786	.750	.944	.844	.971

Counts Unlimited, Inc.
PO Box 1178
Corona, CA 92878
(951)268-6268

City of Rancho Cucamonga
N/S: Milliken Avenue
E/W: Fourth Street
Weather: Clear

File Name : 10_RNC_Mil_4th AM
Site Code : 00322818
Start Date : 9/20/2022
Page No : 1

Groups Printed- Large 2 Axle Vehicles

	Milliken Avenue Southbound				Fourth Street Westbound				Milliken Avenue Northbound				Fourth Street Eastbound				
Start Time	Left	Thru	Right	App. Total	Left	Thru	Right	App. Total	Left	Thru	Right	App. Total	Left	Thru	Right	App. Total	Int. Total
07:00 AM	0	2	1	3	4	0	2	6	0	3	2	5	1	4	1	6	20
07:15 AM	1	1	0	2	3	4	0	7	1	3	0	4	3	3	0	6	19
07:30 AM	1	4	1	6	3	2	1	6	0	3	1	4	0	1	2	3	19
07:45 AM	0	6	0	6	3	2	0	5	1	6	0	7	0	2	1	3	21
Total	2	13	2	17	13	8	3	24	2	15	3	20	4	10	4	18	79
08:00 AM	0	1	0	1	3	4	0	7	1	0	1	2	0	0	0	0	10
08:15 AM	0	1	0	1	2	3	1	6	3	4	1	8	0	2	1	3	18
08:30 AM	0	4	0	4	4	1	1	6	1	6	0	7	0	1	2	3	20
08:45 AM	2	1	0	3	0	3	0	3	1	4	3	8	1	1	1	3	17
Total	2	7	0	9	9	11	2	22	6	14	5	25	1	4	4	9	65
Grand Total	4	20	2	26	22	19	5	46	8	29	8	45	5	14	8	27	144
Apprch %	15.4	76.9	7.7		47.8	41.3	10.9		17.8	64.4	17.8		18.5	51.9	29.6		
Total %	2.8	13.9	1.4	18.1	15.3	13.2	3.5	31.9	5.6	20.1	5.6	31.2	3.5	9.7	5.6	18.8	

	Milliken Avenue Southbound				Fourth Street Westbound				Milliken Avenue Northbound				Fourth Street Eastbound				
Start Time	Left	Thru	Right	App. Total	Left	Thru	Right	App. Total	Left	Thru	Right	App. Total	Left	Thru	Right	App. Total	Int. Total
Peak Hour Analysis From 07:45 AM to 08:30 AM - Peak 1 of 1																	
Peak Hour for Entire Intersection Begins at 07:45 AM																	
07:45 AM	0	**6**	0	**6**	3	2	0	5	1	**6**	0	7	0	**2**	1	**3**	**21**
08:00 AM	0	1	0	1	3	**4**	0	**7**	1	0	**1**	2	0	0	0	0	10
08:15 AM	0	1	0	1	2	3	**1**	6	**3**	4	1	**8**	0	2	1	3	18
08:30 AM	0	4	0	4	**4**	1	1	6	1	6	0	7	0	1	**2**	3	20
Total Volume	0	12	0	12	12	10	2	24	6	16	2	24	0	5	4	9	69
% App. Total	0	100	0		50	41.7	8.3		25	66.7	8.3		0	55.6	44.4		
PHF	.000	.500	.000	.500	.750	.625	.500	.857	.500	.667	.500	.750	.000	.625	.500	.750	.821

Counts Unlimited, Inc.
PO Box 1178
Corona, CA 92878
(951)268-6268

City of Rancho Cucamonga
N/S: Milliken Avenue
E/W: Fourth Street
Weather: Clear

File Name : 10_RNC_Mil_4th AM
Site Code : 00322818
Start Date : 9/20/2022
Page No : 2

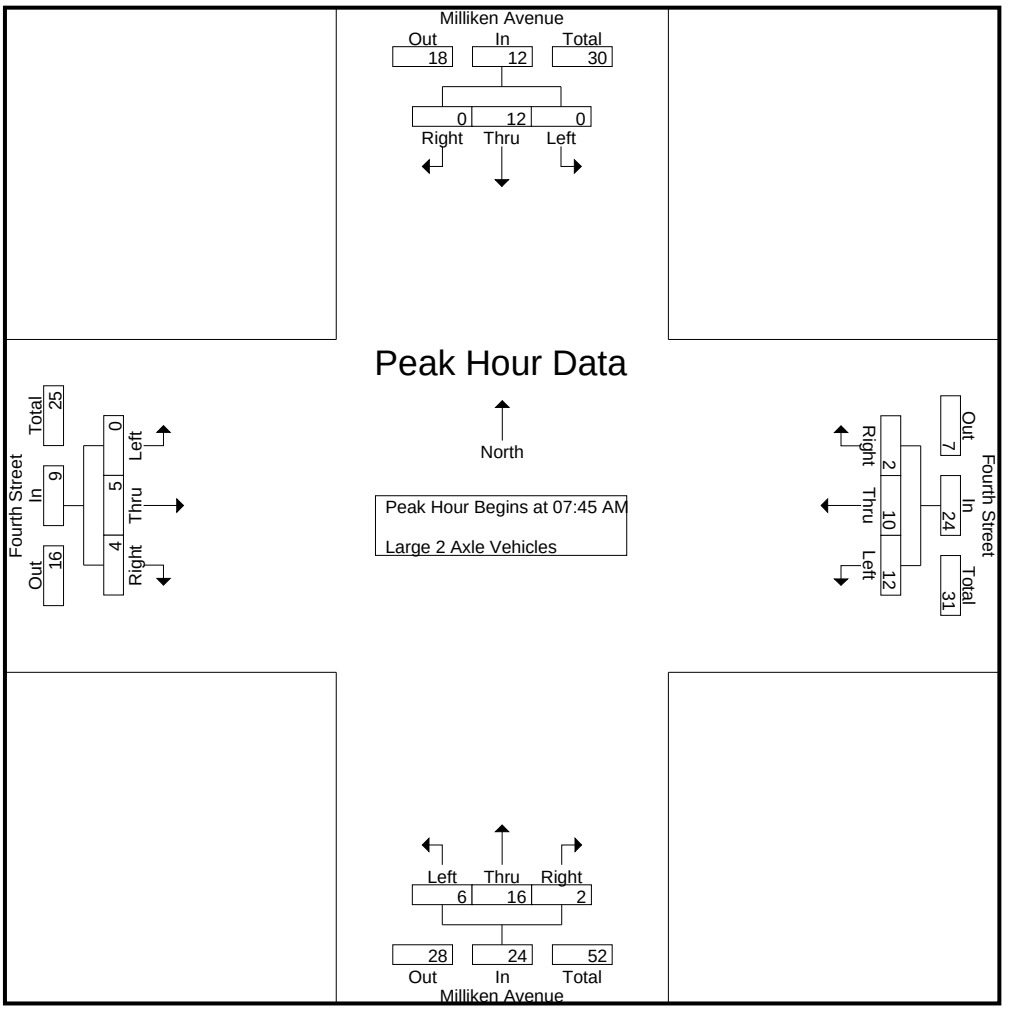

Peak Hour Analysis From 07:45 AM to 08:30 AM - Peak 1 of 1
Peak Hour for Each Approach Begins at:

	07:45 AM				07:45 AM				07:45 AM				07:45 AM			
+0 mins.	0	**6**	0	**6**	3	2	0	5	1	**6**	0	7	0	**2**	1	**3**
+15 mins.	0	1	0	1	3	**4**	0	**7**	1	0	**1**	2	0	0	0	0
+30 mins.	0	1	0	1	2	3	**1**	6	**3**	4	1	**8**	0	2	1	3
+45 mins.	0	4	0	4	**4**	1	1	6	1	6	0	7	0	1	**2**	3
Total Volume	0	12	0	12	12	10	2	24	6	16	2	24	0	5	4	9
% App. Total	0	100	0		50	41.7	8.3		25	66.7	8.3		0	55.6	44.4	
PHF	.000	.500	.000	.500	.750	.625	.500	.857	.500	.667	.500	.750	.000	.625	.500	.750

Counts Unlimited, Inc.
PO Box 1178
Corona, CA 92878
(951)268-6268

City of Rancho Cucamonga
N/S: Milliken Avenue
E/W: Fourth Street
Weather: Clear

File Name : 10_RNC_Mil_4th AM
Site Code : 00322818
Start Date : 9/20/2022
Page No : 1

Groups Printed- 3 Axle Vehicles

	Milliken Avenue Southbound				Fourth Street Westbound				Milliken Avenue Northbound				Fourth Street Eastbound				
Start Time	Left	Thru	Right	App. Total	Left	Thru	Right	App. Total	Left	Thru	Right	App. Total	Left	Thru	Right	App. Total	Int. Total
07:00 AM	0	1	0	1	2	2	0	4	0	1	0	1	0	0	0	0	6
07:15 AM	0	1	0	1	0	1	0	1	3	0	0	3	0	0	1	1	6
07:30 AM	1	3	0	4	1	1	0	2	0	0	1	1	0	0	0	0	7
07:45 AM	0	2	0	2	0	0	0	0	0	3	0	3	0	0	0	0	5
Total	1	7	0	8	3	4	0	7	3	4	1	8	0	0	1	1	24
08:00 AM	0	2	0	2	0	0	0	0	0	1	0	1	0	0	0	0	3
08:15 AM	0	1	0	1	1	1	0	2	0	4	0	4	0	0	0	0	7
08:30 AM	0	6	0	6	1	2	0	3	0	3	1	4	0	0	0	0	13
08:45 AM	0	2	0	2	0	2	1	3	0	1	0	1	0	1	0	1	7
Total	0	11	0	11	2	5	1	8	0	9	1	10	0	1	0	1	30
Grand Total	1	18	0	19	5	9	1	15	3	13	2	18	0	1	1	2	54
Apprch %	5.3	94.7	0		33.3	60	6.7		16.7	72.2	11.1		0	50	50		
Total %	1.9	33.3	0	35.2	9.3	16.7	1.9	27.8	5.6	24.1	3.7	33.3	0	1.9	1.9	3.7	

	Milliken Avenue Southbound				Fourth Street Westbound				Milliken Avenue Northbound				Fourth Street Eastbound				
Start Time	Left	Thru	Right	App. Total	Left	Thru	Right	App. Total	Left	Thru	Right	App. Total	Left	Thru	Right	App. Total	Int. Total
Peak Hour Analysis From 07:45 AM to 08:30 AM - Peak 1 of 1																	
Peak Hour for Entire Intersection Begins at 07:45 AM																	
07:45 AM	0	2	0	2	0	0	0	0	0	3	0	3	0	0	0	0	5
08:00 AM	0	2	0	2	0	0	0	0	0	1	0	1	0	0	0	0	3
08:15 AM	0	1	0	1	**1**	1	0	2	0	**4**	0	**4**	0	0	0	0	7
08:30 AM	0	**6**	0	**6**	1	**2**	0	**3**	0	3	**1**	4	0	0	0	0	**13**
Total Volume	0	11	0	11	2	3	0	5	0	11	1	12	0	0	0	0	28
% App. Total	0	100	0		40	60	0		0	91.7	8.3		0	0	0		
PHF	.000	.458	.000	.458	.500	.375	.000	.417	.000	.688	.250	.750	.000	.000	.000	.000	.538

Counts Unlimited, Inc.
PO Box 1178
Corona, CA 92878
(951)268-6268

City of Rancho Cucamonga
N/S: Milliken Avenue
E/W: Fourth Street
Weather: Clear

File Name : 10_RNC_Mil_4th AM
Site Code : 00322818
Start Date : 9/20/2022
Page No : 2

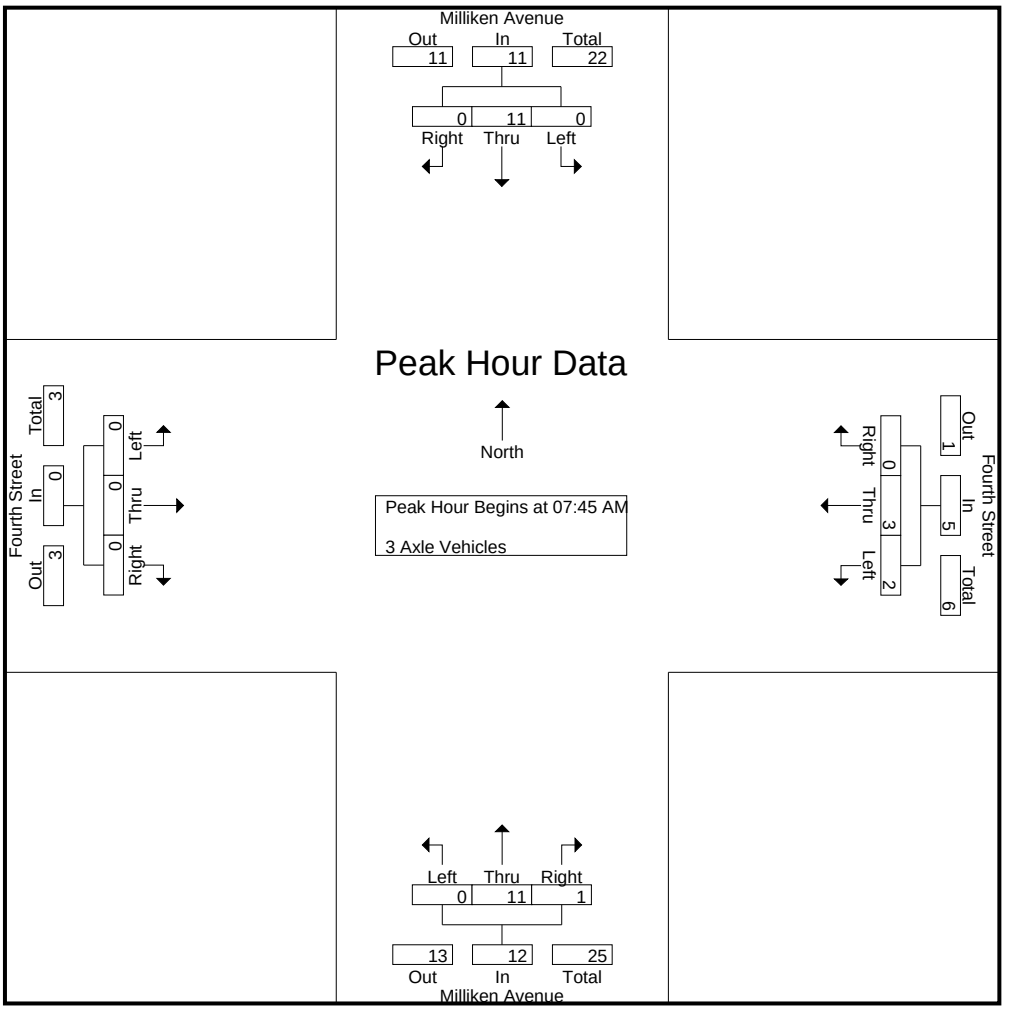

Peak Hour Analysis From 07:45 AM to 08:30 AM - Peak 1 of 1
Peak Hour for Each Approach Begins at:

	07:45 AM				07:45 AM				07:45 AM				07:45 AM			
+0 mins.	0	2	0	2	0	0	0	0	0	3	0	3	0	0	0	0
+15 mins.	0	2	0	2	0	0	0	0	0	1	0	1	0	0	0	0
+30 mins.	0	1	0	1	**1**	1	0	2	0	**4**	0	**4**	0	0	0	0
+45 mins.	0	**6**	0	**6**	1	**2**	0	**3**	0	3	**1**	4	0	0	0	0
Total Volume	0	11	0	11	2	3	0	5	0	11	1	12	0	0	0	0
% App. Total	0	100	0		40	60	0		0	91.7	8.3		0	0	0	
PHF	.000	.458	.000	.458	.500	.375	.000	.417	.000	.688	.250	.750	.000	.000	.000	.000

Counts Unlimited, Inc.
PO Box 1178
Corona, CA 92878
(951)268-6268

City of Rancho Cucamonga
N/S: Milliken Avenue
E/W: Fourth Street
Weather: Clear

File Name : 10_RNC_Mil_4th AM
Site Code : 00322818
Start Date : 9/20/2022
Page No : 1

Groups Printed- 4+ Axle Trucks

	Milliken Avenue Southbound				Fourth Street Westbound				Milliken Avenue Northbound				Fourth Street Eastbound				
Start Time	Left	Thru	Right	App. Total	Left	Thru	Right	App. Total	Left	Thru	Right	App. Total	Left	Thru	Right	App. Total	Int. Total
07:00 AM	1	5	0	6	3	3	1	7	0	7	2	9	0	0	0	0	22
07:15 AM	0	8	1	9	0	3	2	5	1	10	1	12	0	0	0	0	26
07:30 AM	1	8	0	9	1	1	1	3	3	7	0	10	1	1	0	2	24
07:45 AM	3	7	0	10	4	3	2	9	0	11	1	12	0	0	0	0	31
Total	5	28	1	34	8	10	6	24	4	35	4	43	1	1	0	2	103
08:00 AM	1	6	0	7	2	1	1	4	0	9	3	12	1	2	0	3	26
08:15 AM	0	7	0	7	2	7	1	10	1	10	0	11	1	0	0	1	29
08:30 AM	3	11	0	14	2	2	2	6	0	9	5	14	0	2	2	4	38
08:45 AM	2	12	0	14	4	3	3	10	0	13	1	14	0	2	0	2	40
Total	6	36	0	42	10	13	7	30	1	41	9	51	2	6	2	10	133
Grand Total	11	64	1	76	18	23	13	54	5	76	13	94	3	7	2	12	236
Apprch %	14.5	84.2	1.3		33.3	42.6	24.1		5.3	80.9	13.8		25	58.3	16.7		
Total %	4.7	27.1	0.4	32.2	7.6	9.7	5.5	22.9	2.1	32.2	5.5	39.8	1.3	3	0.8	5.1	

	Milliken Avenue Southbound				Fourth Street Westbound				Milliken Avenue Northbound				Fourth Street Eastbound				
Start Time	Left	Thru	Right	App. Total	Left	Thru	Right	App. Total	Left	Thru	Right	App. Total	Left	Thru	Right	App. Total	Int. Total
Peak Hour Analysis From 07:45 AM to 08:30 AM - Peak 1 of 1																	
Peak Hour for Entire Intersection Begins at 07:45 AM																	
07:45 AM	**3**	7	0	10	**4**	3	**2**	9	0	**11**	1	12	0	0	0	0	31
08:00 AM	1	6	0	7	2	1	1	4	0	9	3	12	**1**	**2**	0	3	26
08:15 AM	0	7	0	7	2	**7**	1	**10**	**1**	10	0	11	1	0	0	1	29
08:30 AM	3	**11**	0	**14**	2	2	2	6	0	9	**5**	**14**	0	2	**2**	**4**	**38**
Total Volume	7	31	0	38	10	13	6	29	1	39	9	49	2	4	2	8	124
% App. Total	18.4	81.6	0		34.5	44.8	20.7		2	79.6	18.4		25	50	25		
PHF	.583	.705	.000	.679	.625	.464	.750	.725	.250	.886	.450	.875	.500	.500	.250	.500	.816

Counts Unlimited, Inc.
PO Box 1178
Corona, CA 92878
(951)268-6268

City of Rancho Cucamonga
N/S: Milliken Avenue
E/W: Fourth Street
Weather: Clear

File Name : 10_RNC_Mil_4th AM
Site Code : 00322818
Start Date : 9/20/2022
Page No : 2

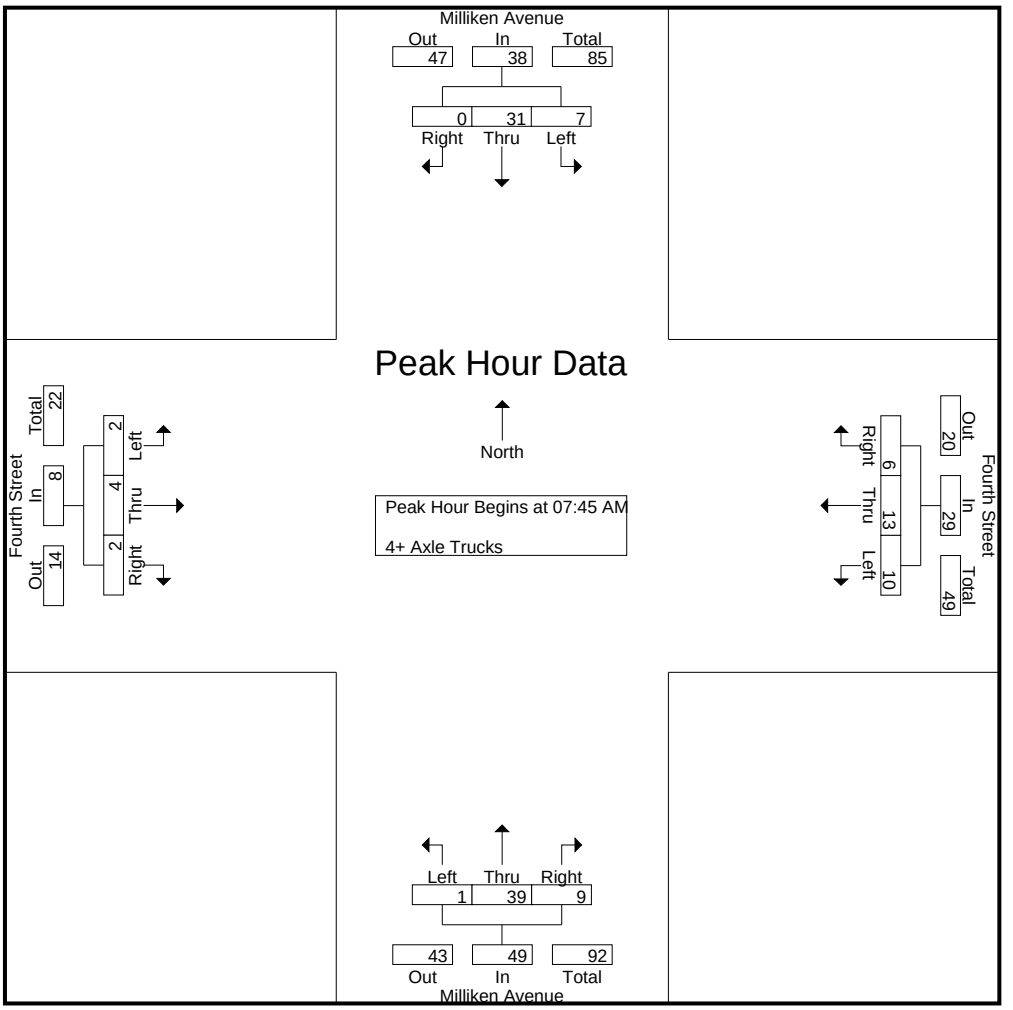

Peak Hour Analysis From 07:45 AM to 08:30 AM - Peak 1 of 1
Peak Hour for Each Approach Begins at:

	07:45 AM				07:45 AM				07:45 AM				07:45 AM			
+0 mins.	**3**	7	0	10	**4**	3	**2**	9	0	**11**	1	12	0	0	0	0
+15 mins.	1	6	0	7	2	1	1	4	0	9	3	12	**1**	**2**	0	3
+30 mins.	0	7	0	7	2	**7**	1	**10**	**1**	10	0	11	1	0	0	1
+45 mins.	3	**11**	0	**14**	2	2	2	6	0	9	**5**	**14**	0	2	**2**	**4**
Total Volume	7	31	0	38	10	13	6	29	1	39	9	49	2	4	2	8
% App. Total	18.4	81.6	0		34.5	44.8	20.7		2	79.6	18.4		25	50	25	
PHF	.583	.705	.000	.679	.625	.464	.750	.725	.250	.886	.450	.875	.500	.500	.250	.500

Counts Unlimited, Inc.
PO Box 1178
Corona, CA 92878
(951)268-6268

City of Rancho Cucamonga
N/S: Milliken Avenue
E/W: Fourth Street
Weather: Clear

File Name : 10_RNC_Mil_4th PM
Site Code : 00322818
Start Date : 9/20/2022

Groups Printed- Passenger Vehicles - Large 2 Axle Vehicles - 3 Axle Vehicles - 4+ Axle Trucks

	Milliken Avenue Southbound				Fourth Street Westbound				Milliken Avenue Northbound				Fourth Street Eastbound				
Start Time	Left	Thru	Right	App. Total	Left	Thru	Right	App. Total	Left	Thru	Right	App. Total	Left	Thru	Right	App. Total	Int. Total
04:00 PM	87	167	17	271	73	176	55	304	38	252	62	352	62	180	44	286	1213
04:15 PM	83	172	27	282	71	154	45	270	68	256	62	386	63	177	38	278	1216
04:30 PM	86	196	28	310	70	132	55	257	42	251	71	364	80	199	61	340	1271
04:45 PM	73	143	12	228	77	149	44	270	50	202	69	321	74	206	68	348	1167
Total	329	678	84	1091	291	611	199	1101	198	961	264	1423	279	762	211	1252	4867
05:00 PM	94	238	29	361	80	144	47	271	46	258	95	399	50	229	75	354	1385
05:15 PM	63	191	18	272	72	137	50	259	67	280	72	419	85	232	58	375	1325
05:30 PM	74	152	7	233	65	174	48	287	50	253	67	370	82	194	67	343	1233
05:45 PM	72	168	22	262	69	146	41	256	47	267	60	374	67	180	63	310	1202
Total	303	749	76	1128	286	601	186	1073	210	1058	294	1562	284	835	263	1382	5145
Grand Total	632	1427	160	2219	577	1212	385	2174	408	2019	558	2985	563	1597	474	2634	10012
Apprch %	28.5	64.3	7.2		26.5	55.7	17.7		13.7	67.6	18.7		21.4	60.6	18		
Total %	6.3	14.3	1.6	22.2	5.8	12.1	3.8	21.7	4.1	20.2	5.6	29.8	5.6	16	4.7	26.3	
Passenger Vehicles	618	1348	160	2126	546	1187	376	2109	403	1934	538	2875	560	1556	468	2584	9694
% Passenger Vehicles	97.8	94.5	100	95.8	94.6	97.9	97.7	97	98.8	95.8	96.4	96.3	99.5	97.4	98.7	98.1	96.8
Large 2 Axle Vehicles	1	20	0	21	13	9	0	22	3	28	5	36	0	9	4	13	92
% Large 2 Axle Vehicles	0.2	1.4	0	0.9	2.3	0.7	0	1	0.7	1.4	0.9	1.2	0	0.6	0.8	0.5	0.9
3 Axle Vehicles	1	9	0	10	3	6	3	12	0	11	5	16	1	8	0	9	47
% 3 Axle Vehicles	0.2	0.6	0	0.5	0.5	0.5	0.8	0.6	0	0.5	0.9	0.5	0.2	0.5	0	0.3	0.5
4+ Axle Trucks	12	50	0	62	15	10	6	31	2	46	10	58	2	24	2	28	179
% 4+ Axle Trucks	1.9	3.5	0	2.8	2.6	0.8	1.6	1.4	0.5	2.3	1.8	1.9	0.4	1.5	0.4	1.1	1.8

	Milliken Avenue Southbound				Fourth Street Westbound				Milliken Avenue Northbound				Fourth Street Eastbound				
Start Time	Left	Thru	Right	App. Total	Left	Thru	Right	App. Total	Left	Thru	Right	App. Total	Left	Thru	Right	App. Total	Int. Total
Peak Hour Analysis From 04:00 PM to 05:45 PM - Peak 1 of 1																	
Peak Hour for Entire Intersection Begins at 04:30 PM																	
04:30 PM	86	196	28	310	70	132	**55**	257	42	251	71	364	80	199	61	340	1271
04:45 PM	73	143	12	228	77	**149**	44	270	50	202	69	321	74	206	68	348	1167
05:00 PM	**94**	**238**	**29**	**361**	**80**	144	47	**271**	46	258	**95**	399	50	229	**75**	354	**1385**
05:15 PM	63	191	18	272	72	137	50	259	**67**	**280**	72	**419**	**85**	**232**	58	**375**	1325
Total Volume	316	768	87	1171	299	562	196	1057	205	991	307	1503	289	866	262	1417	5148
% App. Total	27	65.6	7.4		28.3	53.2	18.5		13.6	65.9	20.4		20.4	61.1	18.5		
PHF	.840	.807	.750	.811	.934	.943	.891	.975	.765	.885	.808	.897	.850	.933	.873	.945	.929

Counts Unlimited, Inc.
PO Box 1178
Corona, CA 92878
(951)268-6268

City of Rancho Cucamonga
N/S: Milliken Avenue
E/W: Fourth Street
Weather: Clear

File Name : 10_RNC_Mil_4th PM
Site Code : 00322818
Start Date : 9/20/2022
Page No : 2

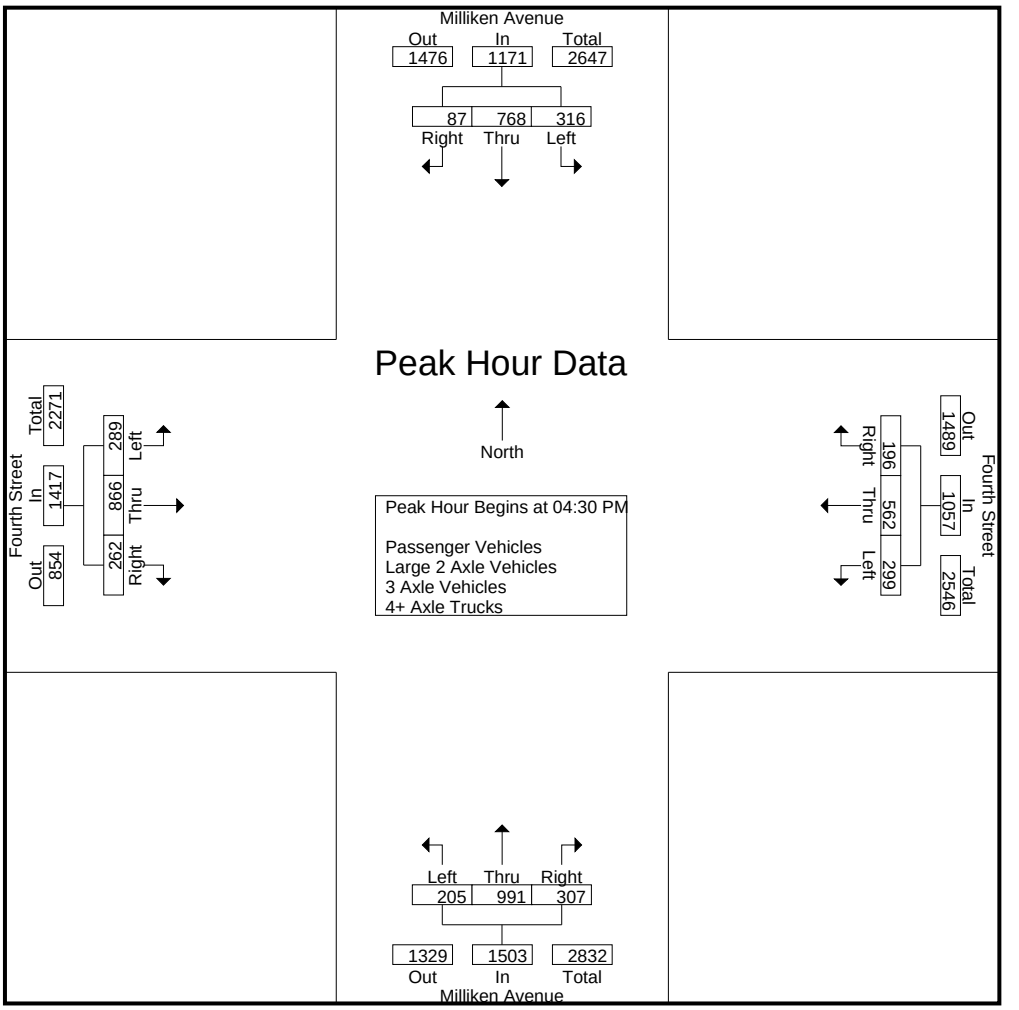

Peak Hour Analysis From 04:00 PM to 05:45 PM - Peak 1 of 1
Peak Hour for Each Approach Begins at:

	04:15 PM				04:00 PM				05:00 PM				04:45 PM			
+0 mins.	83	172	27	282	73	**176**	**55**	**304**	46	258	**95**	399	74	206	68	348
+15 mins.	86	196	28	310	71	154	45	270	**67**	**280**	72	**419**	50	229	**75**	354
+30 mins.	73	143	12	228	70	132	55	257	50	253	67	370	**85**	**232**	58	**375**
+45 mins.	**94**	**238**	**29**	**361**	**77**	149	44	270	47	267	60	374	82	194	67	343
Total Volume	336	749	96	1181	291	611	199	1101	210	1058	294	1562	291	861	268	1420
% App. Total	28.5	63.4	8.1		26.4	55.5	18.1		13.4	67.7	18.8		20.5	60.6	18.9	
PHF	.894	.787	.828	.818	.945	.868	.905	.905	.784	.945	.774	.932	.856	.928	.893	.947

Counts Unlimited, Inc.
PO Box 1178
Corona, CA 92878
(951)268-6268

City of Rancho Cucamonga
N/S: Milliken Avenue
E/W: Fourth Street
Weather: Clear

File Name : 10_RNC_Mil_4th PM
Site Code : 00322818
Start Date : 9/20/2022
Page No : 1

Groups Printed- Passenger Vehicles

	Milliken Avenue Southbound				Fourth Street Westbound				Milliken Avenue Northbound				Fourth Street Eastbound				
Start Time	Left	Thru	Right	App. Total	Left	Thru	Right	App. Total	Left	Thru	Right	App. Total	Left	Thru	Right	App. Total	Int. Total
04:00 PM	84	156	17	257	69	172	53	294	36	241	60	337	62	175	44	281	1169
04:15 PM	81	163	27	271	66	151	43	260	67	243	59	369	62	175	37	274	1174
04:30 PM	83	190	28	301	68	129	54	251	42	238	68	348	80	190	60	330	1230
04:45 PM	71	128	12	211	73	147	44	264	50	193	67	310	74	199	67	340	1125
Total	319	637	84	1040	276	599	194	1069	195	915	254	1364	278	739	208	1225	4698
05:00 PM	93	219	29	341	77	138	46	261	45	248	92	385	50	222	75	347	1334
05:15 PM	62	186	18	266	67	136	49	252	66	271	69	406	84	228	57	369	1293
05:30 PM	72	145	7	224	63	172	47	282	50	247	66	363	81	190	66	337	1206
05:45 PM	72	161	22	255	63	142	40	245	47	253	57	357	67	177	62	306	1163
Total	299	711	76	1086	270	588	182	1040	208	1019	284	1511	282	817	260	1359	4996
Grand Total	618	1348	160	2126	546	1187	376	2109	403	1934	538	2875	560	1556	468	2584	9694
Apprch %	29.1	63.4	7.5		25.9	56.3	17.8		14	67.3	18.7		21.7	60.2	18.1		
Total %	6.4	13.9	1.7	21.9	5.6	12.2	3.9	21.8	4.2	20	5.5	29.7	5.8	16.1	4.8	26.7	

	Milliken Avenue Southbound				Fourth Street Westbound				Milliken Avenue Northbound				Fourth Street Eastbound				
Start Time	Left	Thru	Right	App. Total	Left	Thru	Right	App. Total	Left	Thru	Right	App. Total	Left	Thru	Right	App. Total	Int. Total
Peak Hour Analysis From 04:30 PM to 05:15 PM - Peak 1 of 1																	
Peak Hour for Entire Intersection Begins at 04:30 PM																	
04:30 PM	83	190	28	301	68	129	**54**	251	42	238	68	348	80	190	60	330	1230
04:45 PM	71	128	12	211	73	**147**	44	**264**	50	193	67	310	74	199	67	340	1125
05:00 PM	**93**	**219**	**29**	**341**	**77**	138	46	261	45	248	**92**	385	50	222	**75**	347	**1334**
05:15 PM	62	186	18	266	67	136	49	252	**66**	**271**	69	**406**	**84**	**228**	57	**369**	1293
Total Volume	309	723	87	1119	285	550	193	1028	203	950	296	1449	288	839	259	1386	4982
% App. Total	27.6	64.6	7.8		27.7	53.5	18.8		14	65.6	20.4		20.8	60.5	18.7		
PHF	.831	.825	.750	.820	.925	.935	.894	.973	.769	.876	.804	.892	.857	.920	.863	.939	.934

Counts Unlimited, Inc.
PO Box 1178
Corona, CA 92878
(951)268-6268

City of Rancho Cucamonga
N/S: Milliken Avenue
E/W: Fourth Street
Weather: Clear

File Name : 10_RNC_Mil_4th PM
Site Code : 00322818
Start Date : 9/20/2022
Page No : 2

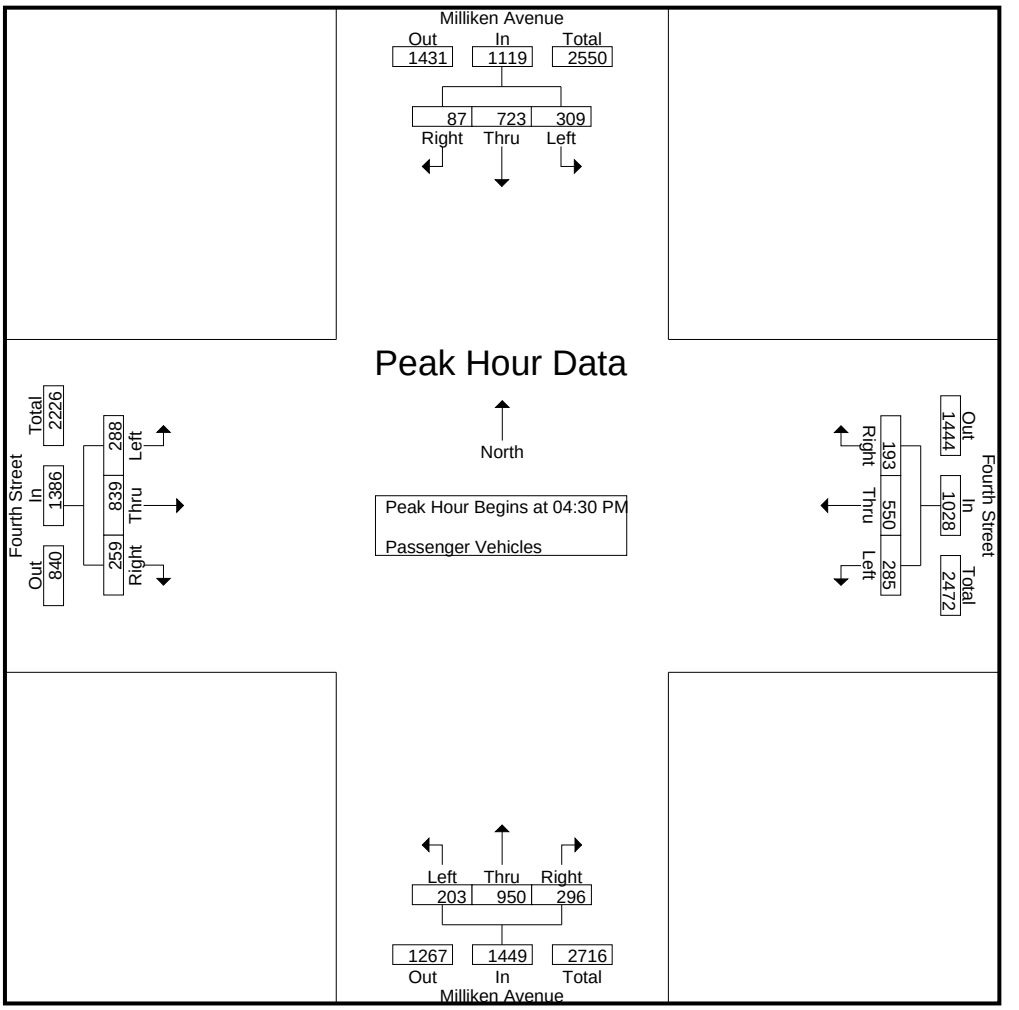

Peak Hour Analysis From 04:30 PM to 05:15 PM - Peak 1 of 1
Peak Hour for Each Approach Begins at:

	04:30 PM				04:30 PM				04:30 PM				04:30 PM			
+0 mins.	83	190	28	301	68	129	**54**	251	42	238	68	348	80	190	60	330
+15 mins.	71	128	12	211	73	**147**	44	**264**	50	193	67	310	74	199	67	340
+30 mins.	**93**	**219**	**29**	**341**	**77**	138	46	261	45	248	**92**	385	50	222	**75**	347
+45 mins.	62	186	18	266	67	136	49	252	**66**	**271**	69	**406**	**84**	**228**	57	**369**
Total Volume	309	723	87	1119	285	550	193	1028	203	950	296	1449	288	839	259	1386
% App. Total	27.6	64.6	7.8		27.7	53.5	18.8		14	65.6	20.4		20.8	60.5	18.7	
PHF	.831	.825	.750	.820	.925	.935	.894	.973	.769	.876	.804	.892	.857	.920	.863	.939

Counts Unlimited, Inc.
PO Box 1178
Corona, CA 92878
(951)268-6268

City of Rancho Cucamonga
N/S: Milliken Avenue
E/W: Fourth Street
Weather: Clear

File Name : 10_RNC_Mil_4th PM
Site Code : 00322818
Start Date : 9/20/2022
Page No : 1

Groups Printed- Large 2 Axle Vehicles

	Milliken Avenue Southbound				Fourth Street Westbound				Milliken Avenue Northbound				Fourth Street Eastbound				
Start Time	Left	Thru	Right	App. Total	Left	Thru	Right	App. Total	Left	Thru	Right	App. Total	Left	Thru	Right	App. Total	Int. Total
04:00 PM	1	1	0	2	0	1	0	1	0	2	0	2	0	1	0	1	6
04:15 PM	0	1	0	1	2	1	0	3	1	1	0	2	0	0	0	0	6
04:30 PM	0	4	0	4	2	2	0	4	0	5	2	7	0	1	1	2	17
04:45 PM	0	4	0	4	2	2	0	4	0	2	1	3	0	1	1	2	13
Total	1	10	0	11	6	6	0	12	1	10	3	14	0	3	2	5	42
05:00 PM	0	4	0	4	0	1	0	1	1	3	2	6	0	3	0	3	14
05:15 PM	0	1	0	1	3	1	0	4	1	4	0	5	0	0	0	0	10
05:30 PM	0	4	0	4	1	0	0	1	0	6	0	6	0	2	1	3	14
05:45 PM	0	1	0	1	3	1	0	4	0	5	0	5	0	1	1	2	12
Total	0	10	0	10	7	3	0	10	2	18	2	22	0	6	2	8	50
Grand Total	1	20	0	21	13	9	0	22	3	28	5	36	0	9	4	13	92
Apprch %	4.8	95.2	0		59.1	40.9	0		8.3	77.8	13.9		0	69.2	30.8		
Total %	1.1	21.7	0	22.8	14.1	9.8	0	23.9	3.3	30.4	5.4	39.1	0	9.8	4.3	14.1	

	Milliken Avenue Southbound				Fourth Street Westbound				Milliken Avenue Northbound				Fourth Street Eastbound				
Start Time	Left	Thru	Right	App. Total	Left	Thru	Right	App. Total	Left	Thru	Right	App. Total	Left	Thru	Right	App. Total	Int. Total
Peak Hour Analysis From 04:30 PM to 05:15 PM - Peak 1 of 1																	
Peak Hour for Entire Intersection Begins at 04:30 PM																	
04:30 PM	0	**4**	0	**4**	2	**2**	0	**4**	0	**5**	**2**	**7**	0	1	**1**	2	**17**
04:45 PM	0	4	0	4	2	2	0	4	0	2	1	3	0	1	1	2	13
05:00 PM	0	4	0	4	0	1	0	1	**1**	3	2	6	0	**3**	0	**3**	14
05:15 PM	0	1	0	1	**3**	1	0	4	1	4	0	5	0	0	0	0	10
Total Volume	0	13	0	13	7	6	0	13	2	14	5	21	0	5	2	7	54
% App. Total	0	100	0		53.8	46.2	0		9.5	66.7	23.8		0	71.4	28.6		
PHF	.000	.813	.000	.813	.583	.750	.000	.813	.500	.700	.625	.750	.000	.417	.500	.583	.794

Counts Unlimited, Inc.
PO Box 1178
Corona, CA 92878
(951)268-6268

City of Rancho Cucamonga
N/S: Milliken Avenue
E/W: Fourth Street
Weather: Clear

File Name : 10_RNC_Mil_4th PM
Site Code : 00322818
Start Date : 9/20/2022
Page No : 2

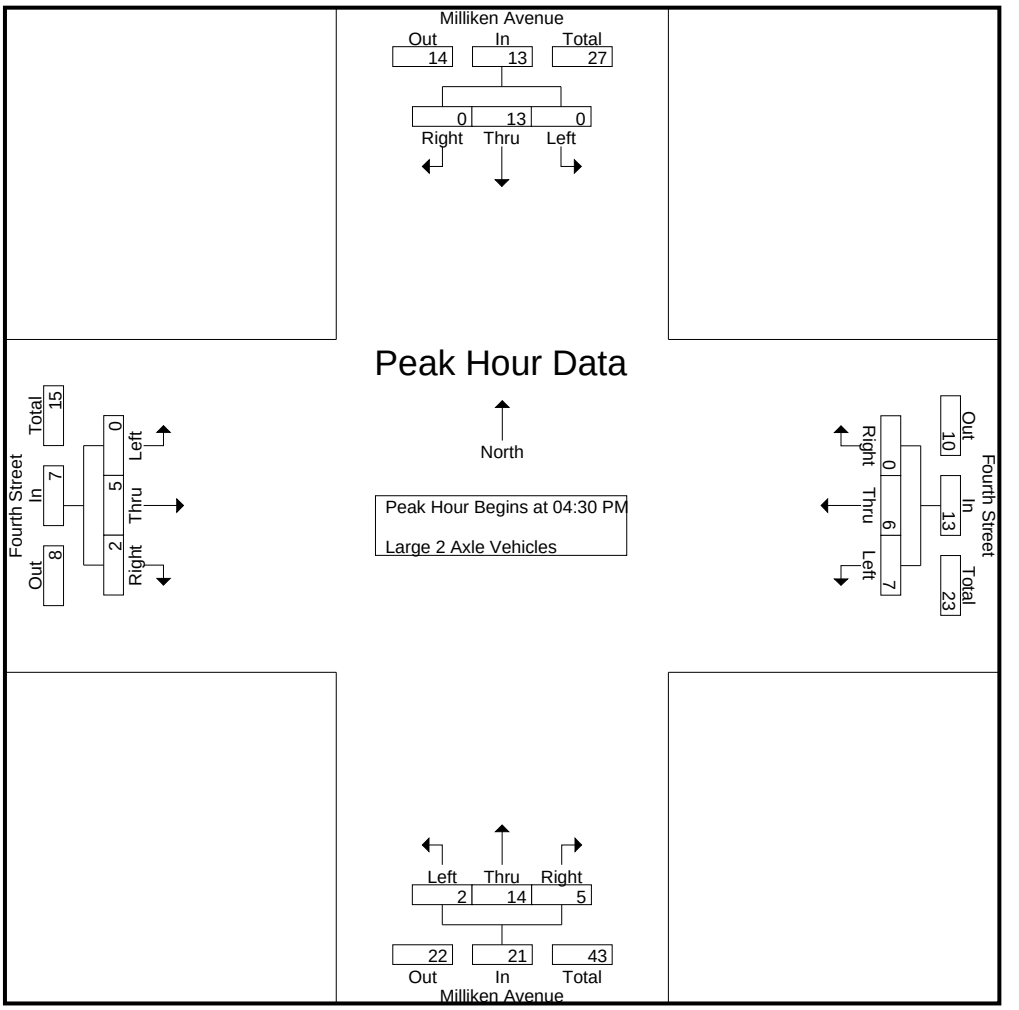

Peak Hour Analysis From 04:30 PM to 05:15 PM - Peak 1 of 1
Peak Hour for Each Approach Begins at:

	04:30 PM				04:30 PM				04:30 PM				04:30 PM			
+0 mins.	0	**4**	0	**4**	2	**2**	0	**4**	0	**5**	**2**	**7**	0	1	**1**	2
+15 mins.	0	4	0	4	2	2	0	4	0	2	1	3	0	1	1	2
+30 mins.	0	4	0	4	0	1	0	1	**1**	3	2	6	0	**3**	0	**3**
+45 mins.	0	1	0	1	**3**	1	0	4	1	4	0	5	0	0	0	0
Total Volume	0	13	0	13	7	6	0	13	2	14	5	21	0	5	2	7
% App. Total	0	100	0		53.8	46.2	0		9.5	66.7	23.8		0	71.4	28.6	
PHF	.000	.813	.000	.813	.583	.750	.000	.813	.500	.700	.625	.750	.000	.417	.500	.583

Counts Unlimited, Inc.
PO Box 1178
Corona, CA 92878
(951)268-6268

City of Rancho Cucamonga
N/S: Milliken Avenue
E/W: Fourth Street
Weather: Clear

File Name : 10_RNC_Mil_4th PM
Site Code : 00322818
Start Date : 9/20/2022
Page No : 1

Groups Printed- 3 Axle Vehicles

	Milliken Avenue Southbound				Fourth Street Westbound				Milliken Avenue Northbound				Fourth Street Eastbound				
Start Time	Left	Thru	Right	App. Total	Left	Thru	Right	App. Total	Left	Thru	Right	App. Total	Left	Thru	Right	App. Total	Int. Total
04:00 PM	0	2	0	2	0	0	0	0	0	0	0	0	0	1	0	1	3
04:15 PM	0	1	0	1	0	2	1	3	0	3	2	5	1	0	0	1	10
04:30 PM	1	0	0	1	0	0	0	0	0	1	0	1	0	3	0	3	5
04:45 PM	0	1	0	1	0	0	0	0	0	2	1	3	0	0	0	0	4
Total	1	4	0	5	0	2	1	3	0	6	3	9	1	4	0	5	22
05:00 PM	0	3	0	3	3	1	1	5	0	1	0	1	0	1	0	1	10
05:15 PM	0	0	0	0	0	0	0	0	0	2	0	2	0	1	0	1	3
05:30 PM	0	0	0	0	0	1	0	1	0	0	1	1	0	1	0	1	3
05:45 PM	0	2	0	2	0	2	1	3	0	2	1	3	0	1	0	1	9
Total	0	5	0	5	3	4	2	9	0	5	2	7	0	4	0	4	25
Grand Total	1	9	0	10	3	6	3	12	0	11	5	16	1	8	0	9	47
Apprch %	10	90	0		25	50	25		0	68.8	31.2		11.1	88.9	0		
Total %	2.1	19.1	0	21.3	6.4	12.8	6.4	25.5	0	23.4	10.6	34	2.1	17	0	19.1	

	Milliken Avenue Southbound				Fourth Street Westbound				Milliken Avenue Northbound				Fourth Street Eastbound				
Start Time	Left	Thru	Right	App. Total	Left	Thru	Right	App. Total	Left	Thru	Right	App. Total	Left	Thru	Right	App. Total	Int. Total
Peak Hour Analysis From 04:30 PM to 05:15 PM - Peak 1 of 1																	
Peak Hour for Entire Intersection Begins at 04:30 PM																	
04:30 PM	**1**	0	0	1	0	0	0	0	0	1	0	1	0	**3**	0	**3**	5
04:45 PM	0	1	0	1	0	0	0	0	0	**2**	**1**	**3**	0	0	0	0	4
05:00 PM	0	**3**	0	**3**	**3**	**1**	**1**	**5**	0	1	0	1	0	1	0	1	**10**
05:15 PM	0	0	0	0	0	0	0	0	0	2	0	2	0	1	0	1	3
Total Volume	1	4	0	5	3	1	1	5	0	6	1	7	0	5	0	5	22
% App. Total	20	80	0		60	20	20		0	85.7	14.3		0	100	0		
PHF	.250	.333	.000	.417	.250	.250	.250	.250	.000	.750	.250	.583	.000	.417	.000	.417	.550

Counts Unlimited, Inc.
PO Box 1178
Corona, CA 92878
(951)268-6268

City of Rancho Cucamonga
N/S: Milliken Avenue
E/W: Fourth Street
Weather: Clear

File Name : 10_RNC_Mil_4th PM
Site Code : 00322818
Start Date : 9/20/2022
Page No : 2

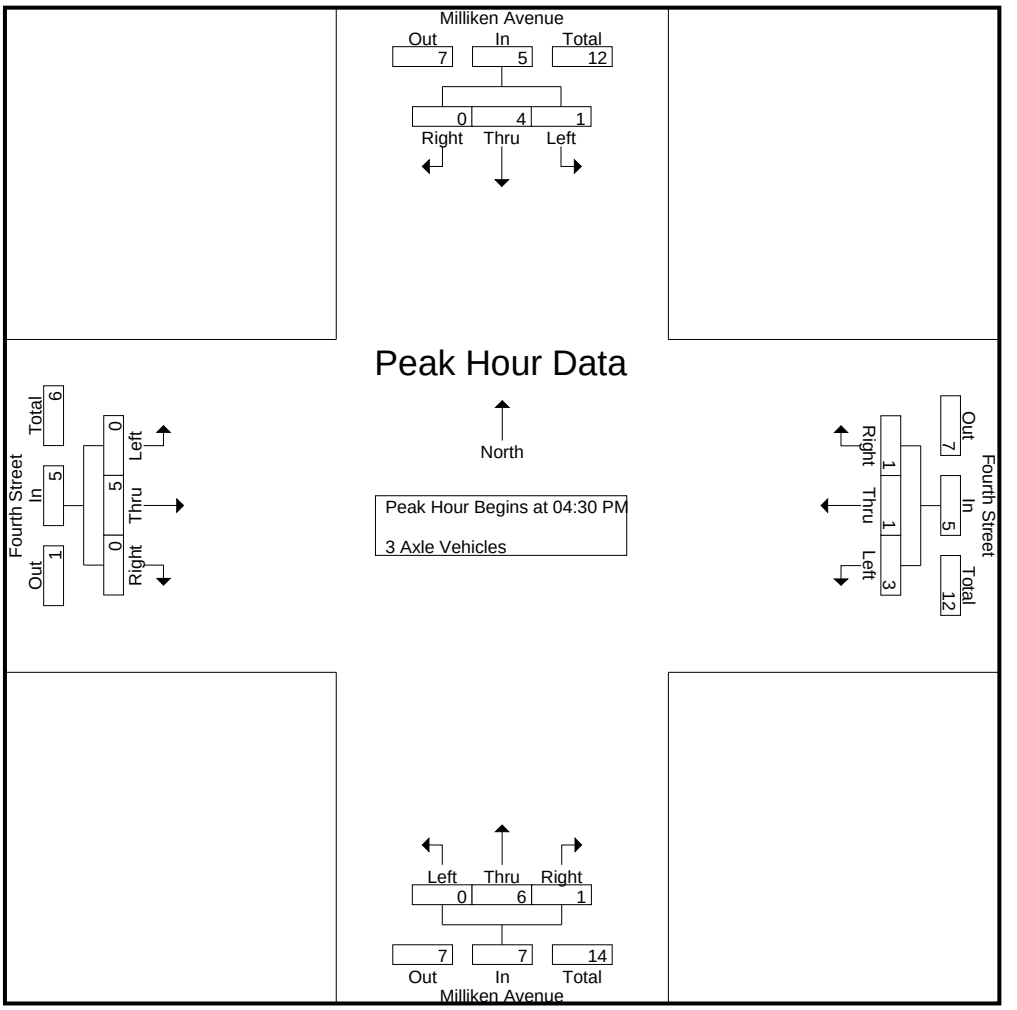

Peak Hour Analysis From 04:30 PM to 05:15 PM - Peak 1 of 1
Peak Hour for Each Approach Begins at:

	04:30 PM				04:30 PM				04:30 PM				04:30 PM			
+0 mins.	**1**	0	0	1	0	0	0	0	0	1	0	1	0	**3**	0	**3**
+15 mins.	0	1	0	1	0	0	0	0	0	**2**	**1**	**3**	0	0	0	0
+30 mins.	0	**3**	0	**3**	**3**	**1**	**1**	**5**	0	1	0	1	0	1	0	1
+45 mins.	0	0	0	0	0	0	0	0	0	2	0	2	0	1	0	1
Total Volume	1	4	0	5	3	1	1	5	0	6	1	7	0	5	0	5
% App. Total	20	80	0		60	20	20		0	85.7	14.3		0	100	0	
PHF	.250	.333	.000	.417	.250	.250	.250	.250	.000	.750	.250	.583	.000	.417	.000	.417

Counts Unlimited, Inc.
PO Box 1178
Corona, CA 92878
(951)268-6268

City of Rancho Cucamonga
N/S: Milliken Avenue
E/W: Fourth Street
Weather: Clear

File Name : 10_RNC_Mil_4th PM
Site Code : 00322818
Start Date : 9/20/2022
Page No : 1

Groups Printed- 4+ Axle Trucks

	Milliken Avenue Southbound				Fourth Street Westbound				Milliken Avenue Northbound				Fourth Street Eastbound				
Start Time	Left	Thru	Right	App. Total	Left	Thru	Right	App. Total	Left	Thru	Right	App. Total	Left	Thru	Right	App. Total	Int. Total
04:00 PM	2	8	0	10	4	3	2	9	2	9	2	13	0	3	0	3	35
04:15 PM	2	7	0	9	3	0	1	4	0	9	1	10	0	2	1	3	26
04:30 PM	2	2	0	4	0	1	1	2	0	7	1	8	0	5	0	5	19
04:45 PM	2	10	0	12	2	0	0	2	0	5	0	5	0	6	0	6	25
Total	8	27	0	35	9	4	4	17	2	30	4	36	0	16	1	17	105
05:00 PM	1	12	0	13	0	4	0	4	0	6	1	7	0	3	0	3	27
05:15 PM	1	4	0	5	2	0	1	3	0	3	3	6	1	3	1	5	19
05:30 PM	2	3	0	5	1	1	1	3	0	0	0	0	1	1	0	2	10
05:45 PM	0	4	0	4	3	1	0	4	0	7	2	9	0	1	0	1	18
Total	4	23	0	27	6	6	2	14	0	16	6	22	2	8	1	11	74
Grand Total	12	50	0	62	15	10	6	31	2	46	10	58	2	24	2	28	179
Apprch %	19.4	80.6	0		48.4	32.3	19.4		3.4	79.3	17.2		7.1	85.7	7.1		
Total %	6.7	27.9	0	34.6	8.4	5.6	3.4	17.3	1.1	25.7	5.6	32.4	1.1	13.4	1.1	15.6	

	Milliken Avenue Southbound				Fourth Street Westbound				Milliken Avenue Northbound				Fourth Street Eastbound				
Start Time	Left	Thru	Right	App. Total	Left	Thru	Right	App. Total	Left	Thru	Right	App. Total	Left	Thru	Right	App. Total	Int. Total
Peak Hour Analysis From 04:30 PM to 05:15 PM - Peak 1 of 1																	
Peak Hour for Entire Intersection Begins at 04:30 PM																	
04:30 PM	**2**	2	0	4	0	1	**1**	2	0	**7**	1	**8**	0	5	0	5	19
04:45 PM	2	10	0	12	**2**	0	0	2	0	5	0	5	0	**6**	0	**6**	25
05:00 PM	1	**12**	0	**13**	0	**4**	0	**4**	0	6	1	7	0	3	0	3	**27**
05:15 PM	1	4	0	5	2	0	1	3	0	3	**3**	6	**1**	3	**1**	5	19
Total Volume	6	28	0	34	4	5	2	11	0	21	5	26	1	17	1	19	90
% App. Total	17.6	82.4	0		36.4	45.5	18.2		0	80.8	19.2		5.3	89.5	5.3		
PHF	.750	.583	.000	.654	.500	.313	.500	.688	.000	.750	.417	.813	.250	.708	.250	.792	.833

Counts Unlimited, Inc.
PO Box 1178
Corona, CA 92878
(951)268-6268

City of Rancho Cucamonga
N/S: Milliken Avenue
E/W: Fourth Street
Weather: Clear

File Name : 10_RNC_Mil_4th PM
Site Code : 00322818
Start Date : 9/20/2022
Page No : 2

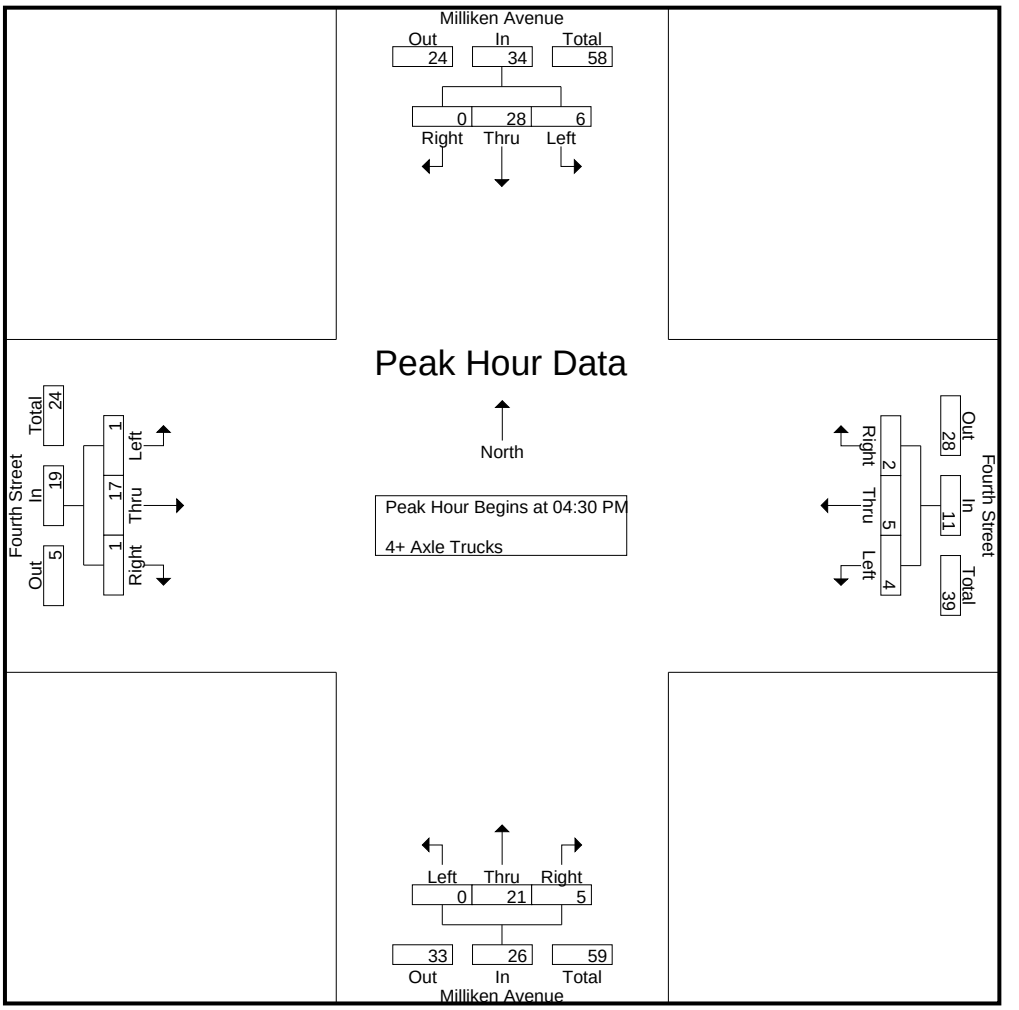

Peak Hour Analysis From 04:30 PM to 05:15 PM - Peak 1 of 1
Peak Hour for Each Approach Begins at:

	04:30 PM				04:30 PM				04:30 PM				04:30 PM			
+0 mins.	**2**	2	0	4	0	1	**1**	2	0	**7**	1	**8**	0	5	0	5
+15 mins.	2	10	0	12	**2**	0	0	2	0	5	0	5	0	**6**	0	**6**
+30 mins.	1	**12**	0	**13**	0	**4**	0	**4**	0	6	1	7	0	3	0	3
+45 mins.	1	4	0	5	2	0	1	3	0	3	**3**	6	**1**	3	**1**	5
Total Volume	6	28	0	34	4	5	2	11	0	21	5	26	1	17	1	19
% App. Total	17.6	82.4	0		36.4	45.5	18.2		0	80.8	19.2		5.3	89.5	5.3	
PHF	.750	.583	.000	.654	.500	.313	.500	.688	.000	.750	.417	.813	.250	.708	.250	.792

Location: Rancho Cucamonga
N/S: Milliken Avenue
E/W: Fourth Street

Date: 9/20/2022
Day: Tuesday

PEDESTRIANS

	North Leg Milliken Avenue	East Leg Fourth Street	South Leg Milliken Avenue	West Leg Fourth Street	
	Pedestrians	Pedestrians	Pedestrians	Pedestrians	
7:00 AM	1	0	0	0	1
7:15 AM	0	0	0	0	0
7:30 AM	2	0	0	1	3
7:45 AM	0	0	0	0	0
8:00 AM	0	1	2	0	3
8:15 AM	0	0	0	0	0
8:30 AM	0	0	0	2	2
8:45 AM	0	2	0	1	3
TOTAL VOLUMES:	3	3	2	4	12

	North Leg Milliken Avenue	East Leg Fourth Street	South Leg Milliken Avenue	West Leg Fourth Street	
	Pedestrians	Pedestrians	Pedestrians	Pedestrians	
4:00 PM	1	2	4	1	8
4:15 PM	4	5	0	1	10
4:30 PM	1	2	0	0	3
4:45 PM	0	0	1	0	1
5:00 PM	3	0	0	1	4
5:15 PM	2	2	1	0	5
5:30 PM	2	0	1	3	6
5:45 PM	1	3	0	0	4
TOTAL VOLUMES:	14	14	7	6	41

Counts Unlimited, Inc.
PO Box 1178
Corona, CA 92878
951-268-6268

Location: Rancho Cucamonga
N/S: Milliken Avenue
E/W: Fourth Street

Date: 9/20/2022
Day: Tuesday

BICYCLES

	Southbound Milliken Avenue			Westbound Fourth Street			Northbound Milliken Avenue			Eastbound Fourth Street			
	Left	Thru	Right	Left	Thru	Right	Left	Thru	Right	Left	Thru	Right	
7:00 AM	0	0	0	0	0	0	0	0	0	1	0	0	1
7:15 AM	0	0	0	0	0	0	0	0	0	0	0	0	0
7:30 AM	0	0	0	0	0	0	0	0	0	0	0	0	0
7:45 AM	0	0	0	0	0	0	0	0	0	0	0	0	0
8:00 AM	0	1	0	0	0	0	0	0	0	0	0	0	1
8:15 AM	0	0	0	0	0	0	0	0	0	0	0	0	0
8:30 AM	1	1	0	0	0	0	0	1	0	0	0	0	3
8:45 AM	0	0	0	0	0	0	0	0	0	0	0	0	0
TOTAL VOLUMES:	1	2	0	0	0	0	0	1	0	1	0	0	5

	Southbound Milliken Avenue			Westbound Fourth Street			Northbound Milliken Avenue			Eastbound Fourth Street			
	Left	Thru	Right	Left	Thru	Right	Left	Thru	Right	Left	Thru	Right	
4:00 PM	0	0	0	0	0	0	0	2	0	0	0	0	2
4:15 PM	0	0	0	0	0	0	0	2	0	0	0	0	2
4:30 PM	0	0	0	0	0	0	0	0	0	0	0	0	0
4:45 PM	0	0	0	0	0	0	0	1	0	0	2	0	3
5:00 PM	0	0	0	0	0	0	0	0	0	0	0	0	0
5:15 PM	0	0	0	0	0	0	0	0	0	0	0	0	0
5:30 PM	0	0	0	0	0	0	0	0	0	0	0	0	0
5:45 PM	0	0	0	0	0	0	0	2	0	0	0	0	2
TOTAL VOLUMES:	0	0	0	0	0	0	0	7	0	0	2	0	9

Counts Unlimited, Inc.
PO Box 1178
Corona, CA 92878
951-268-6268

Counts Unlimited, Inc.
PO Box 1178
Corona, CA 92878
(951)268-6268

City of Ontario
N/S: Milliken Avenue
E/W: Concours Street
Weather: Clear

File Name : 11_ONT_Mil_Con AM
Site Code : 00322818
Start Date : 9/20/2022
Page No : 1

Groups Printed- Passenger Vehicles - Large 2 Axle Vehicles - 3 Axle Vehicles - 4+ Axle Trucks

	Milliken Avenue Southbound				Concours Street Westbound				Milliken Avenue Northbound				Concours Street Eastbound				
Start Time	Left	Thru	Right	App. Total	Left	Thru	Right	App. Total	Left	Thru	Right	App. Total	Left	Thru	Right	App. Total	Int. Total
07:00 AM	13	153	12	178	7	5	6	18	10	118	11	139	12	4	9	25	360
07:15 AM	9	169	18	196	8	7	8	23	15	134	10	159	11	6	11	28	406
07:30 AM	13	194	22	229	14	6	10	30	16	168	11	195	13	5	8	26	480
07:45 AM	9	213	45	267	10	18	17	45	22	209	6	237	17	8	8	33	582
Total	44	729	97	870	39	36	41	116	63	629	38	730	53	23	36	112	1828
08:00 AM	14	193	61	268	9	14	11	34	23	144	6	173	12	3	14	29	504
08:15 AM	20	202	63	285	10	7	9	26	33	173	11	217	14	8	14	36	564
08:30 AM	11	168	59	238	13	7	13	33	27	181	14	222	25	12	16	53	546
08:45 AM	11	202	53	266	9	10	4	23	33	155	10	198	11	8	21	40	527
Total	56	765	236	1057	41	38	37	116	116	653	41	810	62	31	65	158	2141
Grand Total	100	1494	333	1927	80	74	78	232	179	1282	79	1540	115	54	101	270	3969
Apprch %	5.2	77.5	17.3		34.5	31.9	33.6		11.6	83.2	5.1		42.6	20	37.4		
Total %	2.5	37.6	8.4	48.6	2	1.9	2	5.8	4.5	32.3	2	38.8	2.9	1.4	2.5	6.8	
Passenger Vehicles	96	1337	331	1764	64	72	71	207	176	1141	76	1393	114	54	96	264	3628
% Passenger Vehicles	96	89.5	99.4	91.5	80	97.3	91	89.2	98.3	89	96.2	90.5	99.1	100	95	97.8	91.4
Large 2 Axle Vehicles	3	49	2	54	14	2	4	20	2	36	2	40	1	0	3	4	118
% Large 2 Axle Vehicles	3	3.3	0.6	2.8	17.5	2.7	5.1	8.6	1.1	2.8	2.5	2.6	0.9	0	3	1.5	3
3 Axle Vehicles	1	23	0	24	2	0	2	4	1	16	0	17	0	0	1	1	46
% 3 Axle Vehicles	1	1.5	0	1.2	2.5	0	2.6	1.7	0.6	1.2	0	1.1	0	0	1	0.4	1.2
4+ Axle Trucks	0	85	0	85	0	0	1	1	0	89	1	90	0	0	1	1	177
% 4+ Axle Trucks	0	5.7	0	4.4	0	0	1.3	0.4	0	6.9	1.3	5.8	0	0	1	0.4	4.5

	Milliken Avenue Southbound				Concours Street Westbound				Milliken Avenue Northbound				Concours Street Eastbound				
Start Time	Left	Thru	Right	App. Total	Left	Thru	Right	App. Total	Left	Thru	Right	App. Total	Left	Thru	Right	App. Total	Int. Total
Peak Hour Analysis From 07:00 AM to 08:45 AM - Peak 1 of 1																	
Peak Hour for Entire Intersection Begins at 07:45 AM																	
07:45 AM	9	**213**	45	267	10	**18**	**17**	**45**	22	**209**	6	**237**	17	8	8	33	**582**
08:00 AM	14	193	61	268	9	14	11	34	23	144	6	173	12	3	14	29	504
08:15 AM	**20**	202	**63**	**285**	10	7	9	26	**33**	173	11	217	14	8	14	36	564
08:30 AM	11	168	59	238	**13**	7	13	33	27	181	**14**	222	**25**	**12**	**16**	**53**	546
Total Volume	54	776	228	1058	42	46	50	138	105	707	37	849	68	31	52	151	2196
% App. Total	5.1	73.3	21.6		30.4	33.3	36.2		12.4	83.3	4.4		45	20.5	34.4		
PHF	.675	.911	.905	.928	.808	.639	.735	.767	.795	.846	.661	.896	.680	.646	.813	.712	.943

Counts Unlimited, Inc.
PO Box 1178
Corona, CA 92878
(951)268-6268

City of Ontario
N/S: Milliken Avenue
E/W: Concours Street
Weather: Clear

File Name : 11_ONT_Mil_Con AM
Site Code : 00322818
Start Date : 9/20/2022
Page No : 2

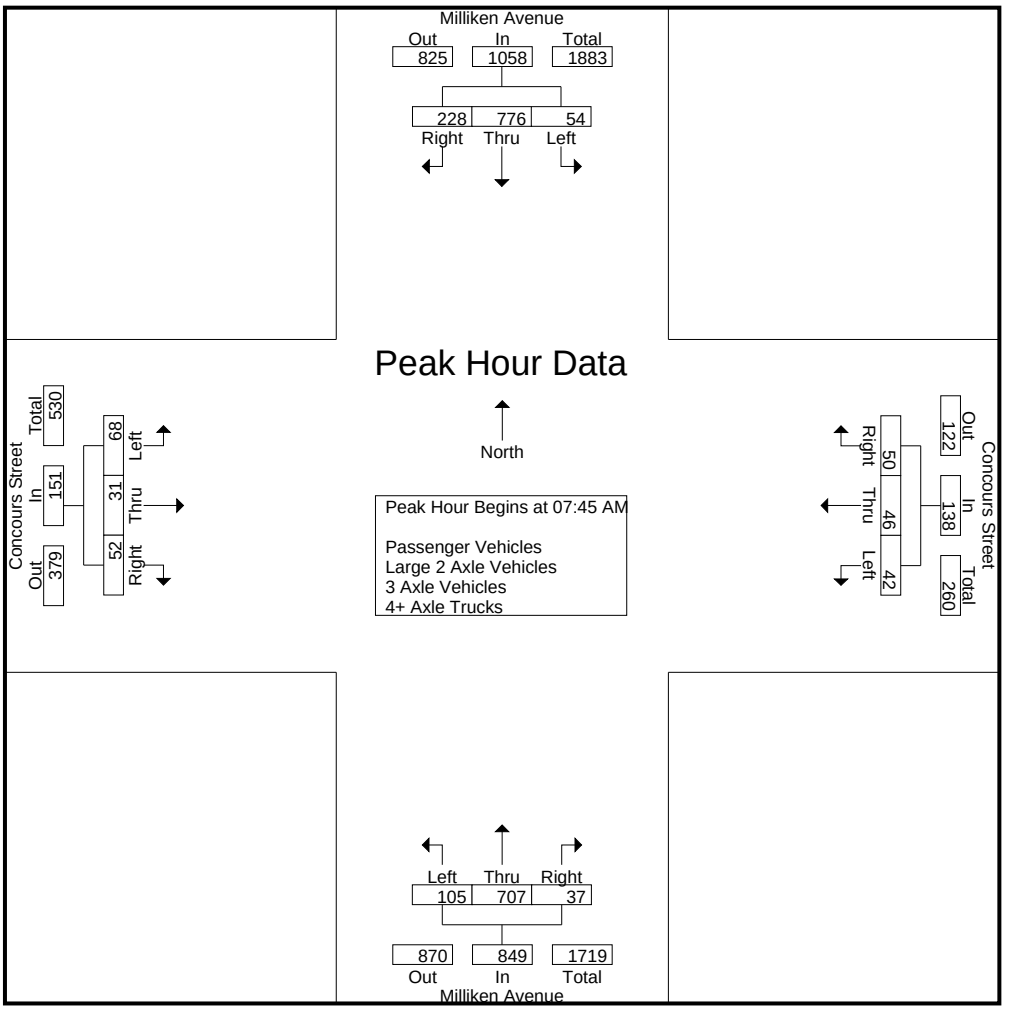

Peak Hour Analysis From 07:00 AM to 08:45 AM - Peak 1 of 1
Peak Hour for Each Approach Begins at:

	07:45 AM				07:45 AM				07:45 AM				08:00 AM			
+0 mins.	9	**213**	45	267	10	**18**	**17**	**45**	22	**209**	6	**237**	12	3	14	29
+15 mins.	14	193	61	268	9	14	11	34	23	144	6	173	14	8	14	36
+30 mins.	**20**	202	**63**	**285**	10	7	9	26	**33**	173	11	217	**25**	**12**	16	**53**
+45 mins.	11	168	59	238	**13**	7	13	33	27	181	**14**	222	11	8	**21**	40
Total Volume	54	776	228	1058	42	46	50	138	105	707	37	849	62	31	65	158
% App. Total	5.1	73.3	21.6		30.4	33.3	36.2		12.4	83.3	4.4		39.2	19.6	41.1	
PHF	.675	.911	.905	.928	.808	.639	.735	.767	.795	.846	.661	.896	.620	.646	.774	.745

Counts Unlimited, Inc.
PO Box 1178
Corona, CA 92878
(951)268-6268

City of Ontario
N/S: Milliken Avenue
E/W: Concours Street
Weather: Clear

File Name : 11_ONT_Mil_Con AM
Site Code : 00322818
Start Date : 9/20/2022
Page No : 1

Groups Printed- Passenger Vehicles

	Milliken Avenue Southbound				Concours Street Westbound				Milliken Avenue Northbound				Concours Street Eastbound				
Start Time	Left	Thru	Right	App. Total	Left	Thru	Right	App. Total	Left	Thru	Right	App. Total	Left	Thru	Right	App. Total	Int. Total
07:00 AM	13	139	12	164	5	5	6	16	10	103	10	123	11	4	8	23	326
07:15 AM	8	151	18	177	8	7	6	21	14	121	9	144	11	6	11	28	370
07:30 AM	12	172	22	206	13	5	10	28	16	153	11	180	13	5	8	26	440
07:45 AM	8	191	45	244	7	18	15	40	22	192	6	220	17	8	7	32	536
Total	41	653	97	791	33	35	37	105	62	569	36	667	52	23	34	109	1672
08:00 AM	14	179	59	252	6	14	11	31	22	127	6	155	12	3	14	29	467
08:15 AM	19	186	63	268	8	7	7	22	33	156	11	200	14	8	14	36	526
08:30 AM	11	138	59	208	11	6	12	29	27	151	13	191	25	12	13	50	478
08:45 AM	11	181	53	245	6	10	4	20	32	138	10	180	11	8	21	40	485
Total	55	684	234	973	31	37	34	102	114	572	40	726	62	31	62	155	1956
Grand Total	96	1337	331	1764	64	72	71	207	176	1141	76	1393	114	54	96	264	3628
Apprch %	5.4	75.8	18.8		30.9	34.8	34.3		12.6	81.9	5.5		43.2	20.5	36.4		
Total %	2.6	36.9	9.1	48.6	1.8	2	2	5.7	4.9	31.4	2.1	38.4	3.1	1.5	2.6	7.3	

	Milliken Avenue Southbound				Concours Street Westbound				Milliken Avenue Northbound				Concours Street Eastbound				
Start Time	Left	Thru	Right	App. Total	Left	Thru	Right	App. Total	Left	Thru	Right	App. Total	Left	Thru	Right	App. Total	Int. Total
Peak Hour Analysis From 07:45 AM to 08:30 AM - Peak 1 of 1																	
Peak Hour for Entire Intersection Begins at 07:45 AM																	
07:45 AM	8	**191**	45	244	7	**18**	**15**	**40**	22	**192**	6	**220**	17	8	7	32	**536**
08:00 AM	14	179	59	252	6	14	11	31	22	127	6	155	12	3	**14**	29	467
08:15 AM	**19**	186	**63**	**268**	8	7	7	22	**33**	156	11	200	14	8	14	36	526
08:30 AM	11	138	59	208	**11**	6	12	29	27	151	**13**	191	**25**	**12**	13	**50**	478
Total Volume	52	694	226	972	32	45	45	122	104	626	36	766	68	31	48	147	2007
% App. Total	5.3	71.4	23.3		26.2	36.9	36.9		13.6	81.7	4.7		46.3	21.1	32.7		
PHF	.684	.908	.897	.907	.727	.625	.750	.763	.788	.815	.692	.870	.680	.646	.857	.735	.936

Counts Unlimited, Inc.
PO Box 1178
Corona, CA 92878
(951)268-6268

City of Ontario
N/S: Milliken Avenue
E/W: Concours Street
Weather: Clear

File Name : 11_ONT_Mil_Con AM
Site Code : 00322818
Start Date : 9/20/2022
Page No : 2

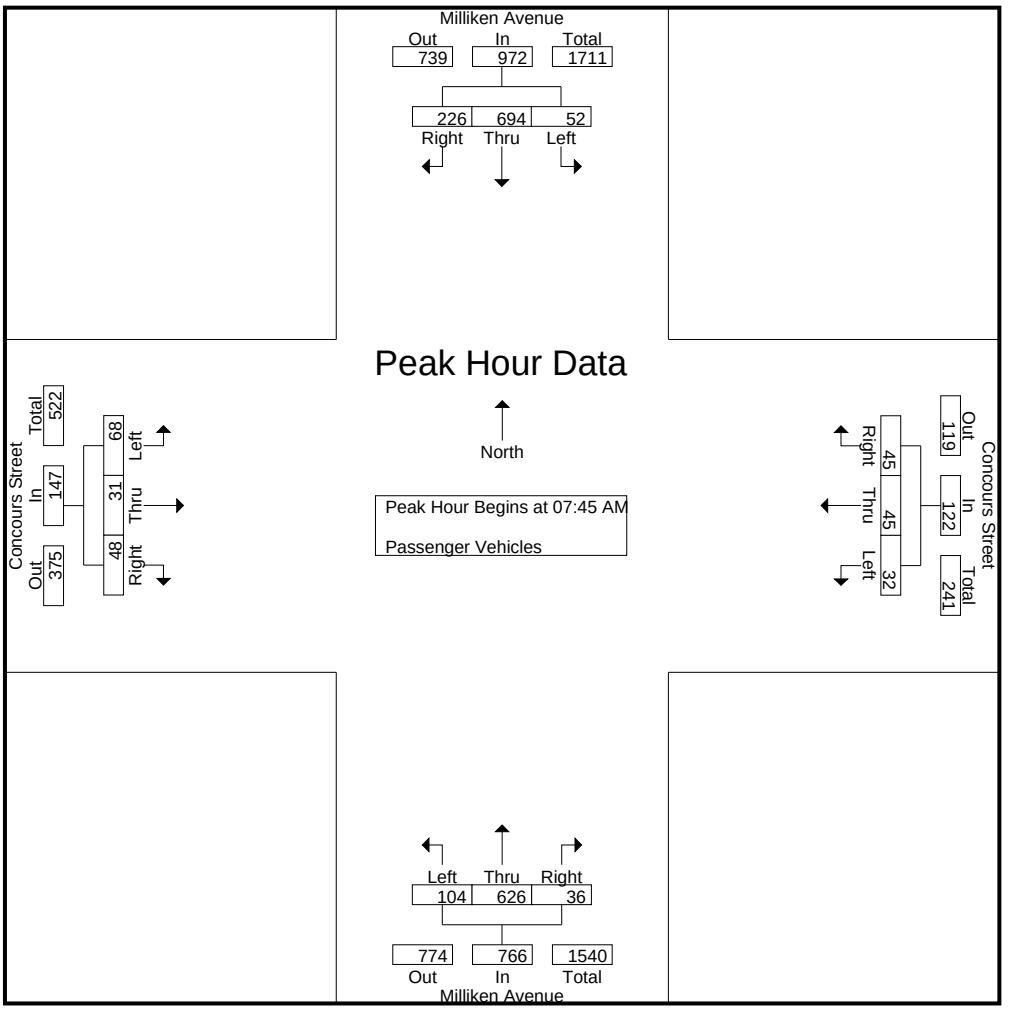

Peak Hour Analysis From 07:45 AM to 08:30 AM - Peak 1 of 1
Peak Hour for Each Approach Begins at:

	07:45 AM				07:45 AM				07:45 AM				07:45 AM			
+0 mins.	8	**191**	45	244	7	**18**	**15**	**40**	22	**192**	6	**220**	17	8	7	32
+15 mins.	14	179	59	252	6	14	11	31	22	127	6	155	12	3	**14**	29
+30 mins.	**19**	186	**63**	**268**	8	7	7	22	**33**	156	11	200	14	8	14	36
+45 mins.	11	138	59	208	**11**	6	12	29	27	151	**13**	191	**25**	**12**	13	**50**
Total Volume	52	694	226	972	32	45	45	122	104	626	36	766	68	31	48	147
% App. Total	5.3	71.4	23.3		26.2	36.9	36.9		13.6	81.7	4.7		46.3	21.1	32.7	
PHF	.684	.908	.897	.907	.727	.625	.750	.763	.788	.815	.692	.870	.680	.646	.857	.735

Counts Unlimited, Inc.
PO Box 1178
Corona, CA 92878
(951)268-6268

City of Ontario
N/S: Milliken Avenue
E/W: Concours Street
Weather: Clear

File Name : 11_ONT_Mil_Con AM
Site Code : 00322818
Start Date : 9/20/2022
Page No : 1

Groups Printed- Large 2 Axle Vehicles

	Milliken Avenue Southbound				Concours Street Westbound				Milliken Avenue Northbound				Concours Street Eastbound				
Start Time	Left	Thru	Right	App. Total	Left	Thru	Right	App. Total	Left	Thru	Right	App. Total	Left	Thru	Right	App. Total	Int. Total
07:00 AM	0	5	0	5	2	0	0	2	0	5	1	6	1	0	1	2	15
07:15 AM	1	6	0	7	0	0	1	1	1	2	1	4	0	0	0	0	12
07:30 AM	1	9	0	10	1	1	0	2	0	5	0	5	0	0	0	0	17
07:45 AM	1	8	0	9	2	0	1	3	0	4	0	4	0	0	0	0	16
Total	3	28	0	31	5	1	2	8	1	16	2	19	1	0	1	2	60
08:00 AM	0	3	2	5	3	0	0	3	0	2	0	2	0	0	0	0	10
08:15 AM	0	6	0	6	2	0	2	4	0	5	0	5	0	0	0	0	15
08:30 AM	0	9	0	9	1	1	0	2	0	8	0	8	0	0	2	2	21
08:45 AM	0	3	0	3	3	0	0	3	1	5	0	6	0	0	0	0	12
Total	0	21	2	23	9	1	2	12	1	20	0	21	0	0	2	2	58
Grand Total	3	49	2	54	14	2	4	20	2	36	2	40	1	0	3	4	118
Apprch %	5.6	90.7	3.7		70	10	20		5	90	5		25	0	75		
Total %	2.5	41.5	1.7	45.8	11.9	1.7	3.4	16.9	1.7	30.5	1.7	33.9	0.8	0	2.5	3.4	

	Milliken Avenue Southbound				Concours Street Westbound				Milliken Avenue Northbound				Concours Street Eastbound				
Start Time	Left	Thru	Right	App. Total	Left	Thru	Right	App. Total	Left	Thru	Right	App. Total	Left	Thru	Right	App. Total	Int. Total
Peak Hour Analysis From 07:45 AM to 08:30 AM - Peak 1 of 1																	
Peak Hour for Entire Intersection Begins at 07:45 AM																	
07:45 AM	**1**	8	0	**9**	2	0	1	3	0	4	0	4	0	0	0	0	16
08:00 AM	0	3	**2**	5	**3**	0	0	3	0	2	0	2	0	0	0	0	10
08:15 AM	0	6	0	6	2	0	**2**	**4**	0	5	0	5	0	0	0	0	15
08:30 AM	0	**9**	0	9	1	**1**	0	2	0	**8**	0	**8**	0	0	**2**	**2**	**21**
Total Volume	1	26	2	29	8	1	3	12	0	19	0	19	0	0	2	2	62
% App. Total	3.4	89.7	6.9		66.7	8.3	25		0	100	0		0	0	100		
PHF	.250	.722	.250	.806	.667	.250	.375	.750	.000	.594	.000	.594	.000	.000	.250	.250	.738

Counts Unlimited, Inc.
PO Box 1178
Corona, CA 92878
(951)268-6268

City of Ontario
N/S: Milliken Avenue
E/W: Concours Street
Weather: Clear

File Name : 11_ONT_Mil_Con AM
Site Code : 00322818
Start Date : 9/20/2022
Page No : 2

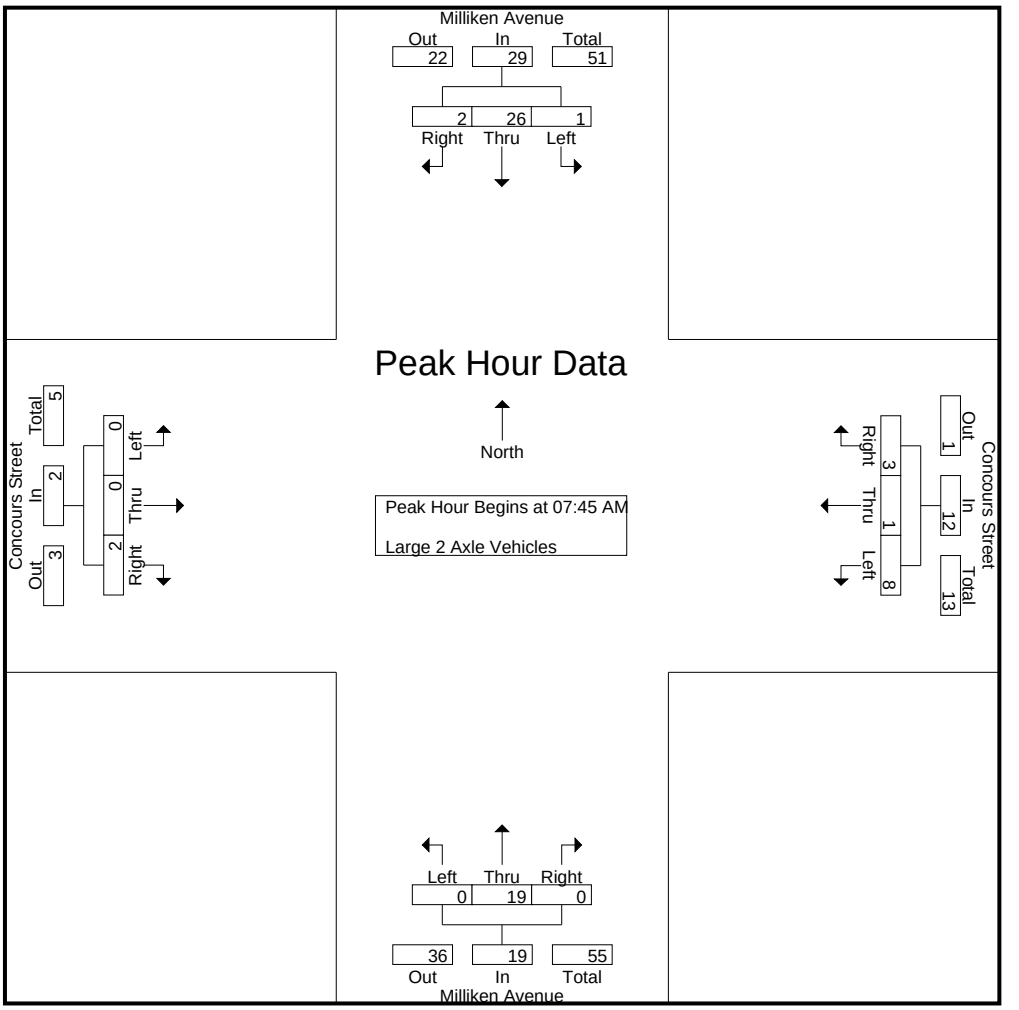

Peak Hour Analysis From 07:45 AM to 08:30 AM - Peak 1 of 1
Peak Hour for Each Approach Begins at:

	07:45 AM				07:45 AM				07:45 AM				07:45 AM			
+0 mins.	**1**	8	0	**9**	2	0	1	3	0	4	0	4	0	0	0	0
+15 mins.	0	3	**2**	5	**3**	0	0	3	0	2	0	2	0	0	0	0
+30 mins.	0	6	0	6	2	0	**2**	**4**	0	5	0	5	0	0	0	0
+45 mins.	0	**9**	0	9	1	**1**	0	2	0	**8**	0	**8**	0	0	**2**	**2**
Total Volume	1	26	2	29	8	1	3	12	0	19	0	19	0	0	2	2
% App. Total	3.4	89.7	6.9		66.7	8.3	25		0	100	0		0	0	100	
PHF	.250	.722	.250	.806	.667	.250	.375	.750	.000	.594	.000	.594	.000	.000	.250	.250

Counts Unlimited, Inc.
PO Box 1178
Corona, CA 92878
(951)268-6268

City of Ontario
N/S: Milliken Avenue
E/W: Concours Street
Weather: Clear

File Name : 11_ONT_Mil_Con AM
Site Code : 00322818
Start Date : 9/20/2022
Page No : 1

Groups Printed- 3 Axle Vehicles

	Milliken Avenue Southbound				Concours Street Westbound				Milliken Avenue Northbound				Concours Street Eastbound				
Start Time	Left	Thru	Right	App. Total	Left	Thru	Right	App. Total	Left	Thru	Right	App. Total	Left	Thru	Right	App. Total	Int. Total
07:00 AM	0	2	0	2	0	0	0	0	0	1	0	1	0	0	0	0	3
07:15 AM	0	3	0	3	0	0	0	0	0	2	0	2	0	0	0	0	5
07:30 AM	0	3	0	3	0	0	0	0	0	1	0	1	0	0	0	0	4
07:45 AM	0	3	0	3	1	0	1	2	0	1	0	1	0	0	1	1	7
Total	0	11	0	11	1	0	1	2	0	5	0	5	0	0	1	1	19
08:00 AM	0	2	0	2	0	0	0	0	1	2	0	3	0	0	0	0	5
08:15 AM	1	1	0	2	0	0	0	0	0	4	0	4	0	0	0	0	6
08:30 AM	0	7	0	7	1	0	1	2	0	4	0	4	0	0	0	0	13
08:45 AM	0	2	0	2	0	0	0	0	0	1	0	1	0	0	0	0	3
Total	1	12	0	13	1	0	1	2	1	11	0	12	0	0	0	0	27
Grand Total	1	23	0	24	2	0	2	4	1	16	0	17	0	0	1	1	46
Apprch %	4.2	95.8	0		50	0	50		5.9	94.1	0		0	0	100		
Total %	2.2	50	0	52.2	4.3	0	4.3	8.7	2.2	34.8	0	37	0	0	2.2	2.2	

	Milliken Avenue Southbound				Concours Street Westbound				Milliken Avenue Northbound				Concours Street Eastbound				
Start Time	Left	Thru	Right	App. Total	Left	Thru	Right	App. Total	Left	Thru	Right	App. Total	Left	Thru	Right	App. Total	Int. Total
Peak Hour Analysis From 07:45 AM to 08:30 AM - Peak 1 of 1																	
Peak Hour for Entire Intersection Begins at 07:45 AM																	
07:45 AM	0	3	0	3	**1**	0	**1**	**2**	0	1	0	1	0	0	**1**	**1**	7
08:00 AM	0	2	0	2	0	0	0	0	**1**	2	0	3	0	0	0	0	5
08:15 AM	**1**	1	0	2	0	0	0	0	0	**4**	0	**4**	0	0	0	0	6
08:30 AM	0	**7**	0	**7**	1	0	1	2	0	4	0	4	0	0	0	0	**13**
Total Volume	1	13	0	14	2	0	2	4	1	11	0	12	0	0	1	1	31
% App. Total	7.1	92.9	0		50	0	50		8.3	91.7	0		0	0	100		
PHF	.250	.464	.000	.500	.500	.000	.500	.500	.250	.688	.000	.750	.000	.000	.250	.250	.596

Counts Unlimited, Inc.
PO Box 1178
Corona, CA 92878
(951)268-6268

City of Ontario
N/S: Milliken Avenue
E/W: Concours Street
Weather: Clear

File Name : 11_ONT_Mil_Con AM
Site Code : 00322818
Start Date : 9/20/2022
Page No : 2

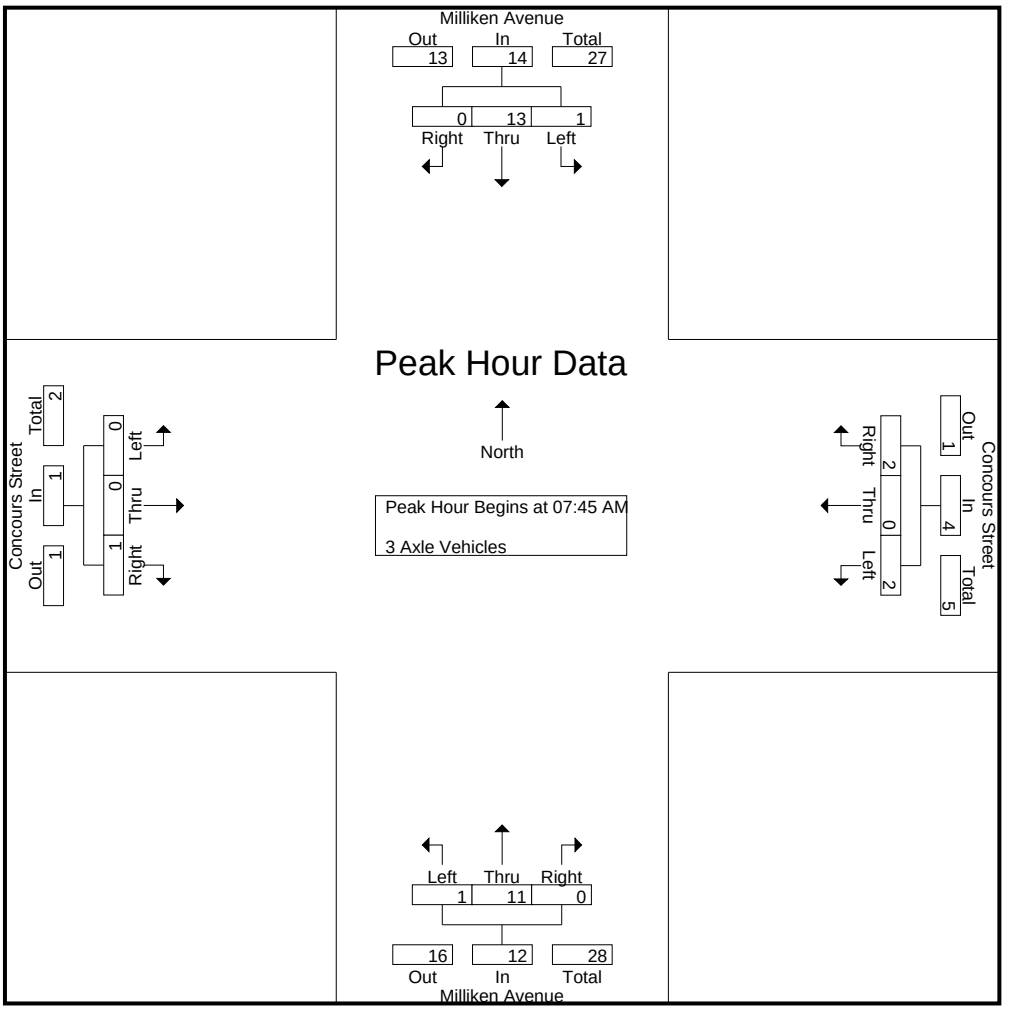

Peak Hour Analysis From 07:45 AM to 08:30 AM - Peak 1 of 1
Peak Hour for Each Approach Begins at:

	07:45 AM				07:45 AM				07:45 AM				07:45 AM			
+0 mins.	0	3	0	3	**1**	0	**1**	**2**	0	1	0	1	0	0	**1**	**1**
+15 mins.	0	2	0	2	0	0	0	0	**1**	2	0	3	0	0	0	0
+30 mins.	**1**	1	0	2	0	0	0	0	0	**4**	0	**4**	0	0	0	0
+45 mins.	0	**7**	0	**7**	1	0	1	2	0	4	0	4	0	0	0	0
Total Volume	1	13	0	14	2	0	2	4	1	11	0	12	0	0	1	1
% App. Total	7.1	92.9	0		50	0	50		8.3	91.7	0		0	0	100	
PHF	.250	.464	.000	.500	.500	.000	.500	.500	.250	.688	.000	.750	.000	.000	.250	.250

Counts Unlimited, Inc.
PO Box 1178
Corona, CA 92878
(951)268-6268

City of Ontario
N/S: Milliken Avenue
E/W: Concours Street
Weather: Clear

File Name : 11_ONT_Mil_Con AM
Site Code : 00322818
Start Date : 9/20/2022
Page No : 1

Groups Printed- 4+ Axle Trucks

	Milliken Avenue Southbound				Concours Street Westbound				Milliken Avenue Northbound				Concours Street Eastbound				
Start Time	Left	Thru	Right	App. Total	Left	Thru	Right	App. Total	Left	Thru	Right	App. Total	Left	Thru	Right	App. Total	Int. Total
07:00 AM	0	7	0	7	0	0	0	0	0	9	0	9	0	0	0	0	16
07:15 AM	0	9	0	9	0	0	1	1	0	9	0	9	0	0	0	0	19
07:30 AM	0	10	0	10	0	0	0	0	0	9	0	9	0	0	0	0	19
07:45 AM	0	11	0	11	0	0	0	0	0	12	0	12	0	0	0	0	23
Total	0	37	0	37	0	0	1	1	0	39	0	39	0	0	0	0	77
08:00 AM	0	9	0	9	0	0	0	0	0	13	0	13	0	0	0	0	22
08:15 AM	0	9	0	9	0	0	0	0	0	8	0	8	0	0	0	0	17
08:30 AM	0	14	0	14	0	0	0	0	0	18	1	19	0	0	1	1	34
08:45 AM	0	16	0	16	0	0	0	0	0	11	0	11	0	0	0	0	27
Total	0	48	0	48	0	0	0	0	0	50	1	51	0	0	1	1	100
Grand Total	0	85	0	85	0	0	1	1	0	89	1	90	0	0	1	1	177
Apprch %	0	100	0		0	0	100		0	98.9	1.1		0	0	100		
Total %	0	48	0	48	0	0	0.6	0.6	0	50.3	0.6	50.8	0	0	0.6	0.6	

	Milliken Avenue Southbound				Concours Street Westbound				Milliken Avenue Northbound				Concours Street Eastbound				
Start Time	Left	Thru	Right	App. Total	Left	Thru	Right	App. Total	Left	Thru	Right	App. Total	Left	Thru	Right	App. Total	Int. Total
Peak Hour Analysis From 07:45 AM to 08:30 AM - Peak 1 of 1																	
Peak Hour for Entire Intersection Begins at 07:45 AM																	
07:45 AM	0	11	0	11	0	0	0	0	0	12	0	12	0	0	0	0	23
08:00 AM	0	9	0	9	0	0	0	0	0	13	0	13	0	0	0	0	22
08:15 AM	0	9	0	9	0	0	0	0	0	8	0	8	0	0	0	0	17
08:30 AM	0	**14**	0	**14**	0	0	0	0	0	**18**	**1**	**19**	0	0	**1**	**1**	**34**
Total Volume	0	43	0	43	0	0	0	0	0	51	1	52	0	0	1	1	96
% App. Total	0	100	0		0	0	0		0	98.1	1.9		0	0	100		
PHF	.000	.768	.000	.768	.000	.000	.000	.000	.000	.708	.250	.684	.000	.000	.250	.250	.706

Counts Unlimited, Inc.
PO Box 1178
Corona, CA 92878
(951)268-6268

City of Ontario
N/S: Milliken Avenue
E/W: Concours Street
Weather: Clear

File Name : 11_ONT_Mil_Con AM
Site Code : 00322818
Start Date : 9/20/2022
Page No : 2

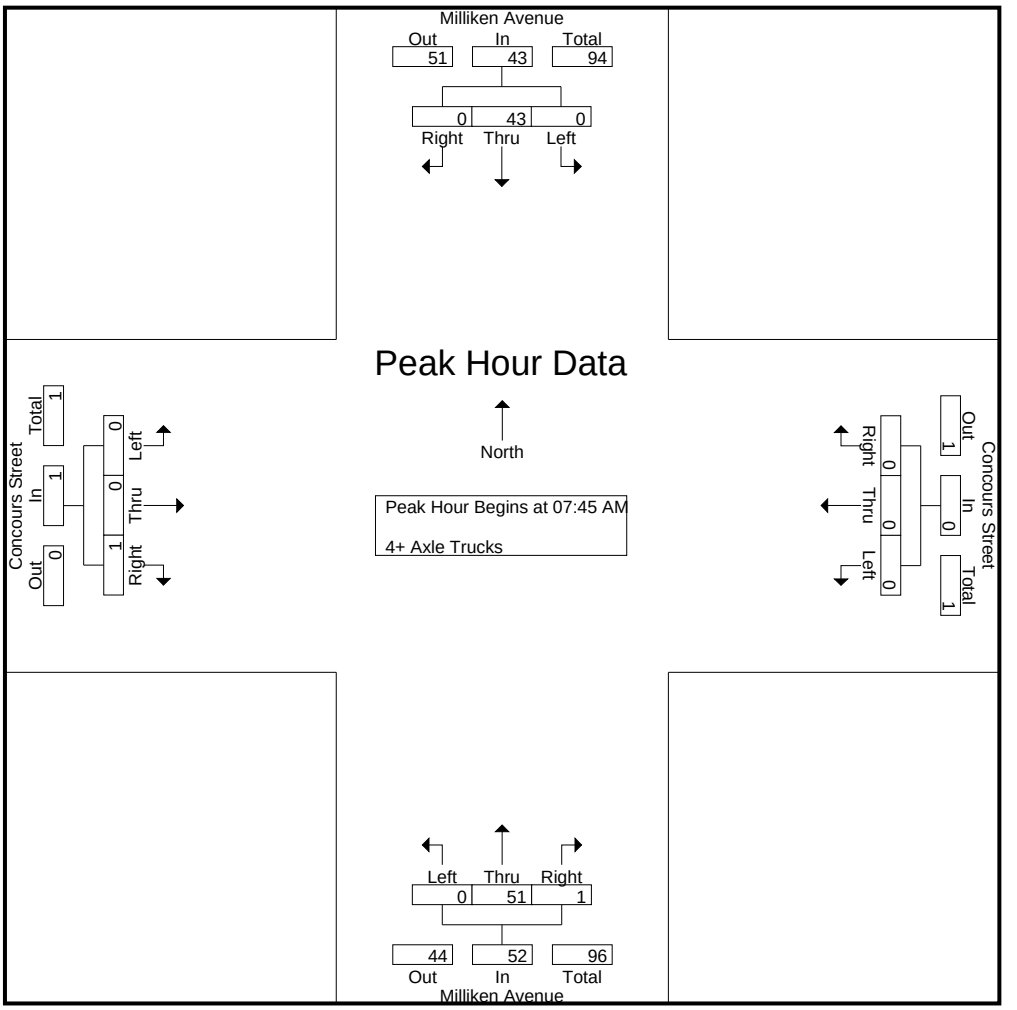

Peak Hour Analysis From 07:45 AM to 08:30 AM - Peak 1 of 1
Peak Hour for Each Approach Begins at:

	07:45 AM				07:45 AM				07:45 AM				07:45 AM			
+0 mins.	0	11	0	11	0	0	0	0	0	12	0	12	0	0	0	0
+15 mins.	0	9	0	9	0	0	0	0	0	13	0	13	0	0	0	0
+30 mins.	0	9	0	9	0	0	0	0	0	8	0	8	0	0	0	0
+45 mins.	0	**14**	0	**14**	0	0	0	0	0	**18**	**1**	**19**	0	0	**1**	**1**
Total Volume	0	43	0	43	0	0	0	0	0	51	1	52	0	0	1	1
% App. Total	0	100	0		0	0	0		0	98.1	1.9		0	0	100	
PHF	.000	.768	.000	.768	.000	.000	.000	.000	.000	.708	.250	.684	.000	.000	.250	.250

Counts Unlimited, Inc.
PO Box 1178
Corona, CA 92878
(951)268-6268

City of Ontario
N/S: Milliken Avenue
E/W: Concours Street
Weather: Clear

File Name : 11_ONT_Mil_Con PM
Site Code : 00322818
Start Date : 9/20/2022
Page No : 1

Groups Printed- Passenger Vehicles - Large 2 Axle Vehicles - 3 Axle Vehicles - 4+ Axle Trucks

	Milliken Avenue Southbound				Concours Street Westbound				Milliken Avenue Northbound				Concours Street Eastbound				
Start Time	Left	Thru	Right	App. Total	Left	Thru	Right	App. Total	Left	Thru	Right	App. Total	Left	Thru	Right	App. Total	Int. Total
04:00 PM	30	170	24	224	26	15	25	66	22	258	21	301	59	22	38	119	710
04:15 PM	40	171	25	236	35	19	21	75	34	301	27	362	61	27	27	115	788
04:30 PM	32	223	15	270	24	15	25	64	41	258	27	326	46	23	41	110	770
04:45 PM	32	180	21	233	22	21	18	61	47	266	24	337	52	24	24	100	731
Total	134	744	85	963	107	70	89	266	144	1083	99	1326	218	96	130	444	2999
05:00 PM	47	245	29	321	25	18	22	65	34	270	28	332	93	31	46	170	888
05:15 PM	39	197	28	264	34	14	27	75	39	290	28	357	84	25	29	138	834
05:30 PM	33	177	38	248	20	16	18	54	38	271	25	334	63	27	30	120	756
05:45 PM	32	183	25	240	19	20	16	55	39	299	20	358	54	15	39	108	761
Total	151	802	120	1073	98	68	83	249	150	1130	101	1381	294	98	144	536	3239
Grand Total	285	1546	205	2036	205	138	172	515	294	2213	200	2707	512	194	274	980	6238
Apprch %	14	75.9	10.1		39.8	26.8	33.4		10.9	81.8	7.4		52.2	19.8	28		
Total %	4.6	24.8	3.3	32.6	3.3	2.2	2.8	8.3	4.7	35.5	3.2	43.4	8.2	3.1	4.4	15.7	
Passenger Vehicles	283	1439	201	1923	192	133	165	490	290	2106	199	2595	510	194	271	975	5983
% Passenger Vehicles	99.3	93.1	98	94.4	93.7	96.4	95.9	95.1	98.6	95.2	99.5	95.9	99.6	100	98.9	99.5	95.9
Large 2 Axle Vehicles	2	29	1	32	10	5	7	22	3	24	0	27	0	0	3	3	84
% Large 2 Axle Vehicles	0.7	1.9	0.5	1.6	4.9	3.6	4.1	4.3	1	1.1	0	1	0	0	1.1	0.3	1.3
3 Axle Vehicles	0	13	0	13	1	0	0	1	1	21	1	23	2	0	0	2	39
% 3 Axle Vehicles	0	0.8	0	0.6	0.5	0	0	0.2	0.3	0.9	0.5	0.8	0.4	0	0	0.2	0.6
4+ Axle Trucks	0	65	3	68	2	0	0	2	0	62	0	62	0	0	0	0	132
% 4+ Axle Trucks	0	4.2	1.5	3.3	1	0	0	0.4	0	2.8	0	2.3	0	0	0	0	2.1

	Milliken Avenue Southbound				Concours Street Westbound				Milliken Avenue Northbound				Concours Street Eastbound				
Start Time	Left	Thru	Right	App. Total	Left	Thru	Right	App. Total	Left	Thru	Right	App. Total	Left	Thru	Right	App. Total	Int. Total
Peak Hour Analysis From 04:00 PM to 05:45 PM - Peak 1 of 1																	
Peak Hour for Entire Intersection Begins at 05:00 PM																	
05:00 PM	**47**	**245**	29	**321**	25	18	22	65	34	270	**28**	332	**93**	**31**	**46**	**170**	**888**
05:15 PM	39	197	28	264	**34**	14	**27**	**75**	**39**	290	28	357	84	25	29	138	834
05:30 PM	33	177	**38**	248	20	16	18	54	38	271	25	334	63	27	30	120	756
05:45 PM	32	183	25	240	19	**20**	16	55	39	**299**	20	**358**	54	15	39	108	761
Total Volume	151	802	120	1073	98	68	83	249	150	1130	101	1381	294	98	144	536	3239
% App. Total	14.1	74.7	11.2		39.4	27.3	33.3		10.9	81.8	7.3		54.9	18.3	26.9		
PHF	.803	.818	.789	.836	.721	.850	.769	.830	.962	.945	.902	.964	.790	.790	.783	.788	.912

Counts Unlimited, Inc.
PO Box 1178
Corona, CA 92878
(951)268-6268

City of Ontario
N/S: Milliken Avenue
E/W: Concours Street
Weather: Clear

File Name : 11_ONT_Mil_Con PM
Site Code : 00322818
Start Date : 9/20/2022
Page No : 2

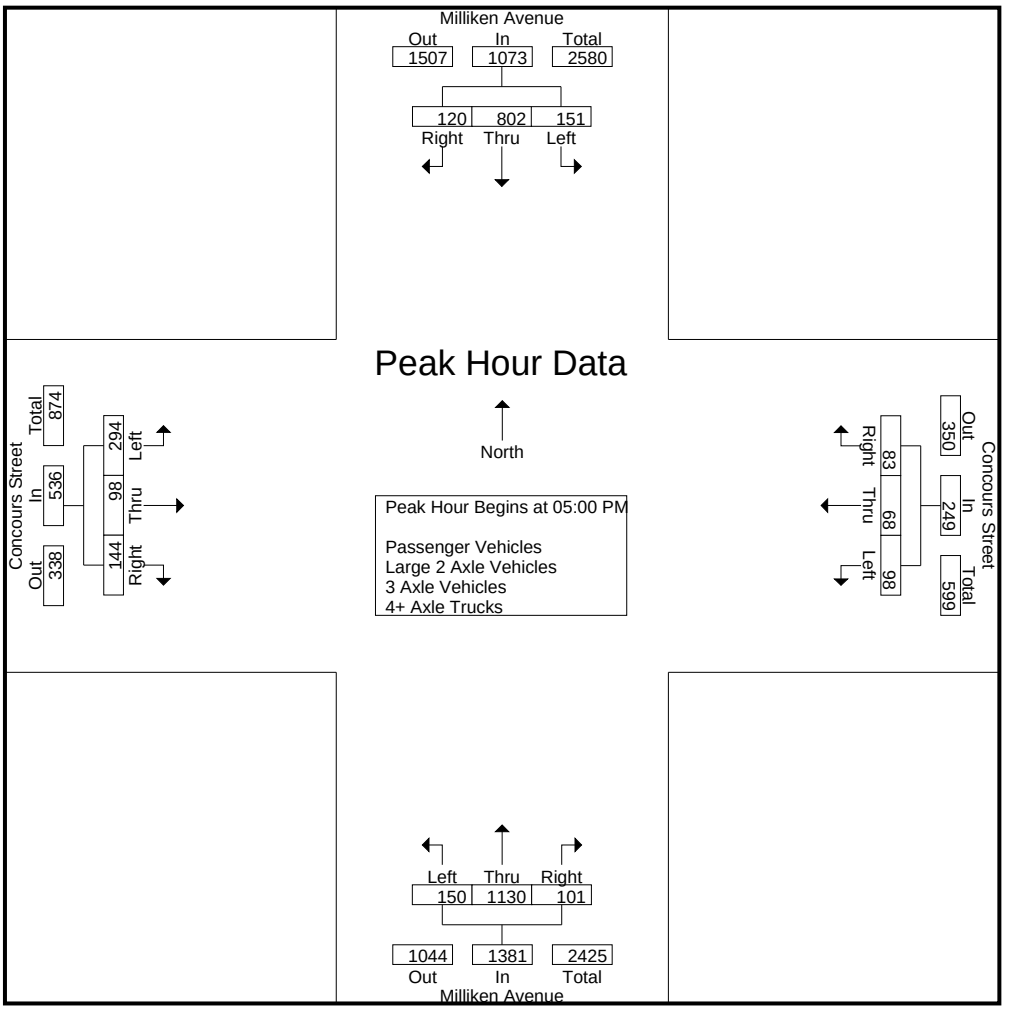

Peak Hour Analysis From 04:00 PM to 05:45 PM - Peak 1 of 1
Peak Hour for Each Approach Begins at:

	04:30 PM				04:00 PM				05:00 PM				05:00 PM			
+0 mins.	32	223	15	270	26	15	**25**	66	34	270	**28**	332	**93**	**31**	**46**	**170**
+15 mins.	32	180	21	233	**35**	19	21	**75**	**39**	290	28	357	84	25	29	138
+30 mins.	**47**	**245**	**29**	**321**	24	15	25	64	38	271	25	334	63	27	30	120
+45 mins.	39	197	28	264	22	**21**	18	61	39	**299**	20	**358**	54	15	39	108
Total Volume	150	845	93	1088	107	70	89	266	150	1130	101	1381	294	98	144	536
% App. Total	13.8	77.7	8.5		40.2	26.3	33.5		10.9	81.8	7.3		54.9	18.3	26.9	
PHF	.798	.862	.802	.847	.764	.833	.890	.887	.962	.945	.902	.964	.790	.790	.783	.788

Counts Unlimited, Inc.
PO Box 1178
Corona, CA 92878
(951)268-6268

City of Ontario
N/S: Milliken Avenue
E/W: Concours Street
Weather: Clear

File Name : 11_ONT_Mil_Con PM
Site Code : 00322818
Start Date : 9/20/2022
Page No : 1

Groups Printed- Passenger Vehicles

	Milliken Avenue Southbound				Concours Street Westbound				Milliken Avenue Northbound				Concours Street Eastbound				
Start Time	Left	Thru	Right	App. Total	Left	Thru	Right	App. Total	Left	Thru	Right	App. Total	Left	Thru	Right	App. Total	Int. Total
04:00 PM	30	157	23	210	24	15	24	63	22	242	21	285	59	22	38	119	677
04:15 PM	40	153	25	218	34	19	20	73	33	280	27	340	61	27	26	114	745
04:30 PM	32	214	15	261	23	15	25	63	39	242	27	308	46	23	40	109	741
04:45 PM	30	165	20	215	21	20	18	59	47	255	24	326	52	24	24	100	700
Total	132	689	83	904	102	69	87	258	141	1019	99	1259	218	96	128	442	2863
05:00 PM	47	227	27	301	21	16	20	57	34	258	28	320	93	31	45	169	847
05:15 PM	39	186	28	253	31	13	25	69	39	280	27	346	84	25	29	138	806
05:30 PM	33	169	38	240	19	16	18	53	38	265	25	328	61	27	30	118	739
05:45 PM	32	168	25	225	19	19	15	53	38	284	20	342	54	15	39	108	728
Total	151	750	118	1019	90	64	78	232	149	1087	100	1336	292	98	143	533	3120
Grand Total	283	1439	201	1923	192	133	165	490	290	2106	199	2595	510	194	271	975	5983
Apprch %	14.7	74.8	10.5		39.2	27.1	33.7		11.2	81.2	7.7		52.3	19.9	27.8		
Total %	4.7	24.1	3.4	32.1	3.2	2.2	2.8	8.2	4.8	35.2	3.3	43.4	8.5	3.2	4.5	16.3	

	Milliken Avenue Southbound				Concours Street Westbound				Milliken Avenue Northbound				Concours Street Eastbound				
Start Time	Left	Thru	Right	App. Total	Left	Thru	Right	App. Total	Left	Thru	Right	App. Total	Left	Thru	Right	App. Total	Int. Total
Peak Hour Analysis From 05:00 PM to 05:45 PM - Peak 1 of 1																	
Peak Hour for Entire Intersection Begins at 05:00 PM																	
05:00 PM	**47**	**227**	27	**301**	21	16	20	57	34	258	**28**	320	**93**	**31**	**45**	**169**	**847**
05:15 PM	39	186	28	253	**31**	13	**25**	**69**	**39**	280	27	**346**	84	25	29	138	806
05:30 PM	33	169	**38**	240	19	16	18	53	38	265	25	328	61	27	30	118	739
05:45 PM	32	168	25	225	19	**19**	15	53	38	**284**	20	342	54	15	39	108	728
Total Volume	151	750	118	1019	90	64	78	232	149	1087	100	1336	292	98	143	533	3120
% App. Total	14.8	73.6	11.6		38.8	27.6	33.6		11.2	81.4	7.5		54.8	18.4	26.8		
PHF	.803	.826	.776	.846	.726	.842	.780	.841	.955	.957	.893	.965	.785	.790	.794	.788	.921

Counts Unlimited, Inc.
PO Box 1178
Corona, CA 92878
(951)268-6268

City of Ontario
N/S: Milliken Avenue
E/W: Concours Street
Weather: Clear

File Name : 11_ONT_Mil_Con PM
Site Code : 00322818
Start Date : 9/20/2022
Page No : 2

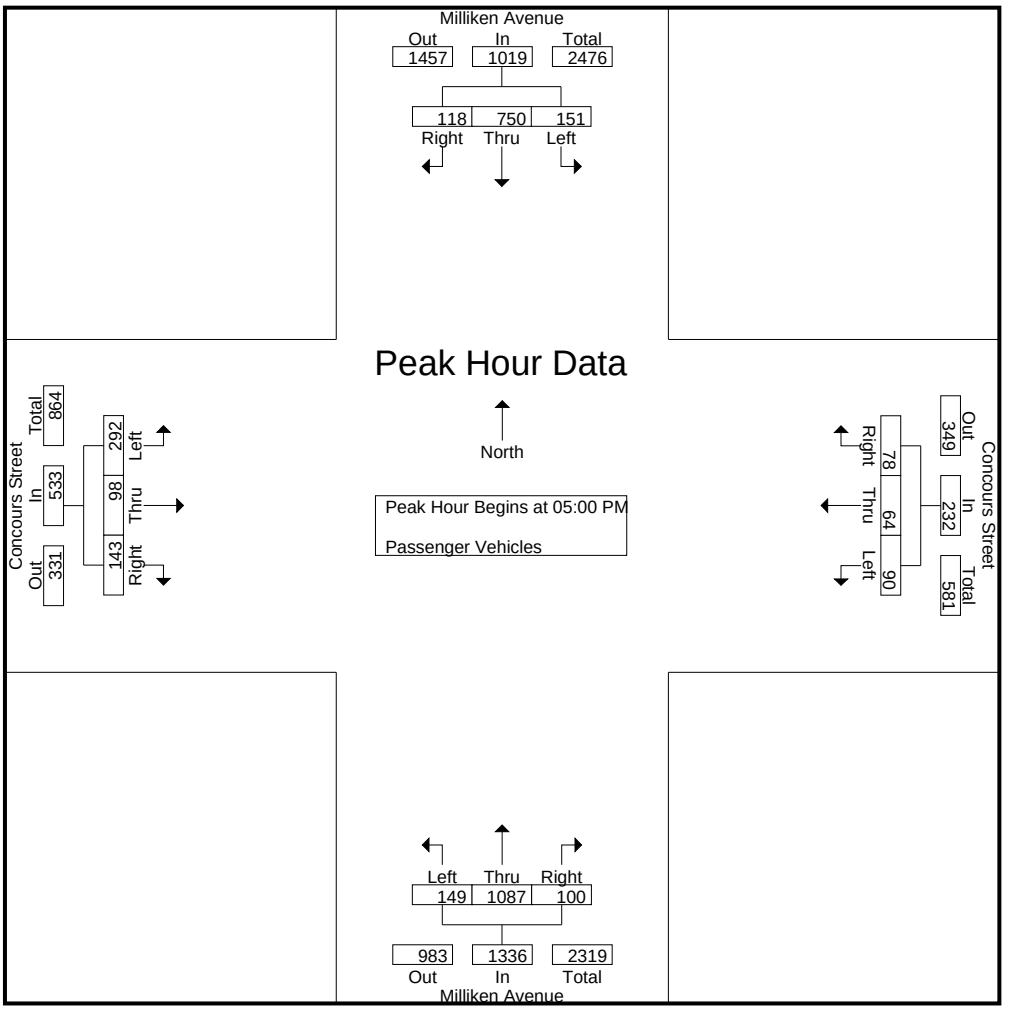

Peak Hour Analysis From 05:00 PM to 05:45 PM - Peak 1 of 1
Peak Hour for Each Approach Begins at:

	05:00 PM				05:00 PM				05:00 PM				05:00 PM			
+0 mins.	**47**	**227**	27	**301**	21	16	20	57	34	258	**28**	320	**93**	**31**	**45**	**169**
+15 mins.	39	186	28	253	**31**	13	**25**	**69**	**39**	280	27	**346**	84	25	29	138
+30 mins.	33	169	**38**	240	19	16	18	53	38	265	25	328	61	27	30	118
+45 mins.	32	168	25	225	19	**19**	15	53	38	**284**	20	342	54	15	39	108
Total Volume	151	750	118	1019	90	64	78	232	149	1087	100	1336	292	98	143	533
% App. Total	14.8	73.6	11.6		38.8	27.6	33.6		11.2	81.4	7.5		54.8	18.4	26.8	
PHF	.803	.826	.776	.846	.726	.842	.780	.841	.955	.957	.893	.965	.785	.790	.794	.788

Counts Unlimited, Inc.
PO Box 1178
Corona, CA 92878
(951)268-6268

City of Ontario
N/S: Milliken Avenue
E/W: Concours Street
Weather: Clear

File Name : 11_ONT_Mil_Con PM
Site Code : 00322818
Start Date : 9/20/2022
Page No : 1

Groups Printed- Large 2 Axle Vehicles

	Milliken Avenue Southbound				Concours Street Westbound				Milliken Avenue Northbound				Concours Street Eastbound				
Start Time	Left	Thru	Right	App. Total	Left	Thru	Right	App. Total	Left	Thru	Right	App. Total	Left	Thru	Right	App. Total	Int. Total
04:00 PM	0	1	0	1	2	0	1	3	0	1	0	1	0	0	0	0	5
04:15 PM	0	3	0	3	1	0	1	2	1	4	0	5	0	0	1	1	11
04:30 PM	0	5	0	5	1	0	0	1	1	7	0	8	0	0	1	1	15
04:45 PM	2	4	0	6	1	1	0	2	0	4	0	4	0	0	0	0	12
Total	2	13	0	15	5	1	2	8	2	16	0	18	0	0	2	2	43
05:00 PM	0	3	1	4	3	2	2	7	0	4	0	4	0	0	1	1	16
05:15 PM	0	3	0	3	2	1	2	5	0	2	0	2	0	0	0	0	10
05:30 PM	0	5	0	5	0	0	0	0	0	0	0	0	0	0	0	0	5
05:45 PM	0	5	0	5	0	1	1	2	1	2	0	3	0	0	0	0	10
Total	0	16	1	17	5	4	5	14	1	8	0	9	0	0	1	1	41
Grand Total	2	29	1	32	10	5	7	22	3	24	0	27	0	0	3	3	84
Apprch %	6.2	90.6	3.1		45.5	22.7	31.8		11.1	88.9	0		0	0	100		
Total %	2.4	34.5	1.2	38.1	11.9	6	8.3	26.2	3.6	28.6	0	32.1	0	0	3.6	3.6	

	Milliken Avenue Southbound				Concours Street Westbound				Milliken Avenue Northbound				Concours Street Eastbound				
Start Time	Left	Thru	Right	App. Total	Left	Thru	Right	App. Total	Left	Thru	Right	App. Total	Left	Thru	Right	App. Total	Int. Total
Peak Hour Analysis From 05:00 PM to 05:45 PM - Peak 1 of 1																	
Peak Hour for Entire Intersection Begins at 05:00 PM																	
05:00 PM	0	3	**1**	4	**3**	**2**	**2**	**7**	0	**4**	0	**4**	0	0	**1**	**1**	**16**
05:15 PM	0	3	0	3	2	1	2	5	0	2	0	2	0	0	0	0	10
05:30 PM	0	**5**	0	**5**	0	0	0	0	0	0	0	0	0	0	0	0	5
05:45 PM	0	5	0	5	0	1	1	2	**1**	2	0	3	0	0	0	0	10
Total Volume	0	16	1	17	5	4	5	14	1	8	0	9	0	0	1	1	41
% App. Total	0	94.1	5.9		35.7	28.6	35.7		11.1	88.9	0		0	0	100		
PHF	.000	.800	.250	.850	.417	.500	.625	.500	.250	.500	.000	.563	.000	.000	.250	.250	.641

Counts Unlimited, Inc.
PO Box 1178
Corona, CA 92878
(951)268-6268

City of Ontario
N/S: Milliken Avenue
E/W: Concours Street
Weather: Clear

File Name : 11_ONT_Mil_Con PM
Site Code : 00322818
Start Date : 9/20/2022
Page No : 2

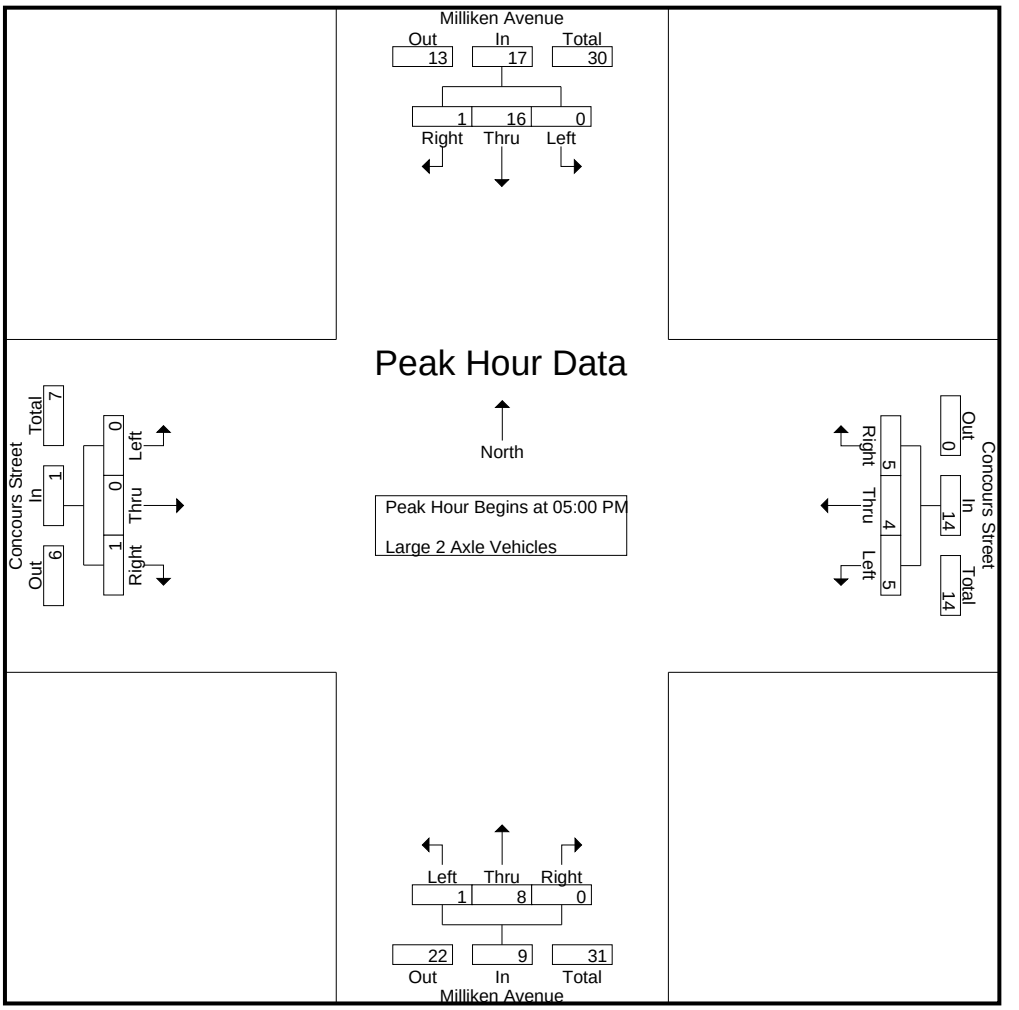

Peak Hour Analysis From 05:00 PM to 05:45 PM - Peak 1 of 1
Peak Hour for Each Approach Begins at:

	05:00 PM				05:00 PM				05:00 PM				05:00 PM			
+0 mins.	0	3	**1**	4	**3**	**2**	**2**	**7**	0	**4**	0	**4**	0	0	**1**	**1**
+15 mins.	0	3	0	3	2	1	2	5	0	2	0	2	0	0	0	0
+30 mins.	0	**5**	0	**5**	0	0	0	0	0	0	0	0	0	0	0	0
+45 mins.	0	5	0	5	0	1	1	2	**1**	2	0	3	0	0	0	0
Total Volume	0	16	1	17	5	4	5	14	1	8	0	9	0	0	1	1
% App. Total	0	94.1	5.9		35.7	28.6	35.7		11.1	88.9	0		0	0	100	
PHF	.000	.800	.250	.850	.417	.500	.625	.500	.250	.500	.000	.563	.000	.000	.250	.250

Counts Unlimited, Inc.
PO Box 1178
Corona, CA 92878
(951)268-6268

City of Ontario
N/S: Milliken Avenue
E/W: Concours Street
Weather: Clear

File Name : 11_ONT_Mil_Con PM
Site Code : 00322818
Start Date : 9/20/2022
Page No : 1

Groups Printed- 3 Axle Vehicles

	Milliken Avenue Southbound				Concours Street Westbound				Milliken Avenue Northbound				Concours Street Eastbound				
Start Time	Left	Thru	Right	App. Total	Left	Thru	Right	App. Total	Left	Thru	Right	App. Total	Left	Thru	Right	App. Total	Int. Total
04:00 PM	0	2	0	2	0	0	0	0	0	4	0	4	0	0	0	0	6
04:15 PM	0	1	0	1	0	0	0	0	0	5	0	5	0	0	0	0	6
04:30 PM	0	0	0	0	0	0	0	0	1	1	0	2	0	0	0	0	2
04:45 PM	0	1	0	1	0	0	0	0	0	4	0	4	0	0	0	0	5
Total	0	4	0	4	0	0	0	0	1	14	0	15	0	0	0	0	19
05:00 PM	0	6	0	6	0	0	0	0	0	3	0	3	0	0	0	0	9
05:15 PM	0	1	0	1	0	0	0	0	0	1	1	2	0	0	0	0	3
05:30 PM	0	0	0	0	1	0	0	1	0	0	0	0	2	0	0	2	3
05:45 PM	0	2	0	2	0	0	0	0	0	3	0	3	0	0	0	0	5
Total	0	9	0	9	1	0	0	1	0	7	1	8	2	0	0	2	20
Grand Total	0	13	0	13	1	0	0	1	1	21	1	23	2	0	0	2	39
Apprch %	0	100	0		100	0	0		4.3	91.3	4.3		100	0	0		
Total %	0	33.3	0	33.3	2.6	0	0	2.6	2.6	53.8	2.6	59	5.1	0	0	5.1	

	Milliken Avenue Southbound				Concours Street Westbound				Milliken Avenue Northbound				Concours Street Eastbound				
Start Time	Left	Thru	Right	App. Total	Left	Thru	Right	App. Total	Left	Thru	Right	App. Total	Left	Thru	Right	App. Total	Int. Total
Peak Hour Analysis From 05:00 PM to 05:45 PM - Peak 1 of 1																	
Peak Hour for Entire Intersection Begins at 05:00 PM																	
05:00 PM	0	**6**	0	**6**	0	0	0	0	0	**3**	0	**3**	0	0	0	0	**9**
05:15 PM	0	1	0	1	0	0	0	0	0	1	**1**	2	0	0	0	0	3
05:30 PM	0	0	0	0	**1**	0	0	**1**	0	0	0	0	**2**	0	0	**2**	3
05:45 PM	0	2	0	2	0	0	0	0	0	3	0	3	0	0	0	0	5
Total Volume	0	9	0	9	1	0	0	1	0	7	1	8	2	0	0	2	20
% App. Total	0	100	0		100	0	0		0	87.5	12.5		100	0	0		
PHF	.000	.375	.000	.375	.250	.000	.000	.250	.000	.583	.250	.667	.250	.000	.000	.250	.556

Counts Unlimited, Inc.
PO Box 1178
Corona, CA 92878
(951)268-6268

City of Ontario
N/S: Milliken Avenue
E/W: Concours Street
Weather: Clear

File Name : 11_ONT_Mil_Con PM
Site Code : 00322818
Start Date : 9/20/2022
Page No : 2

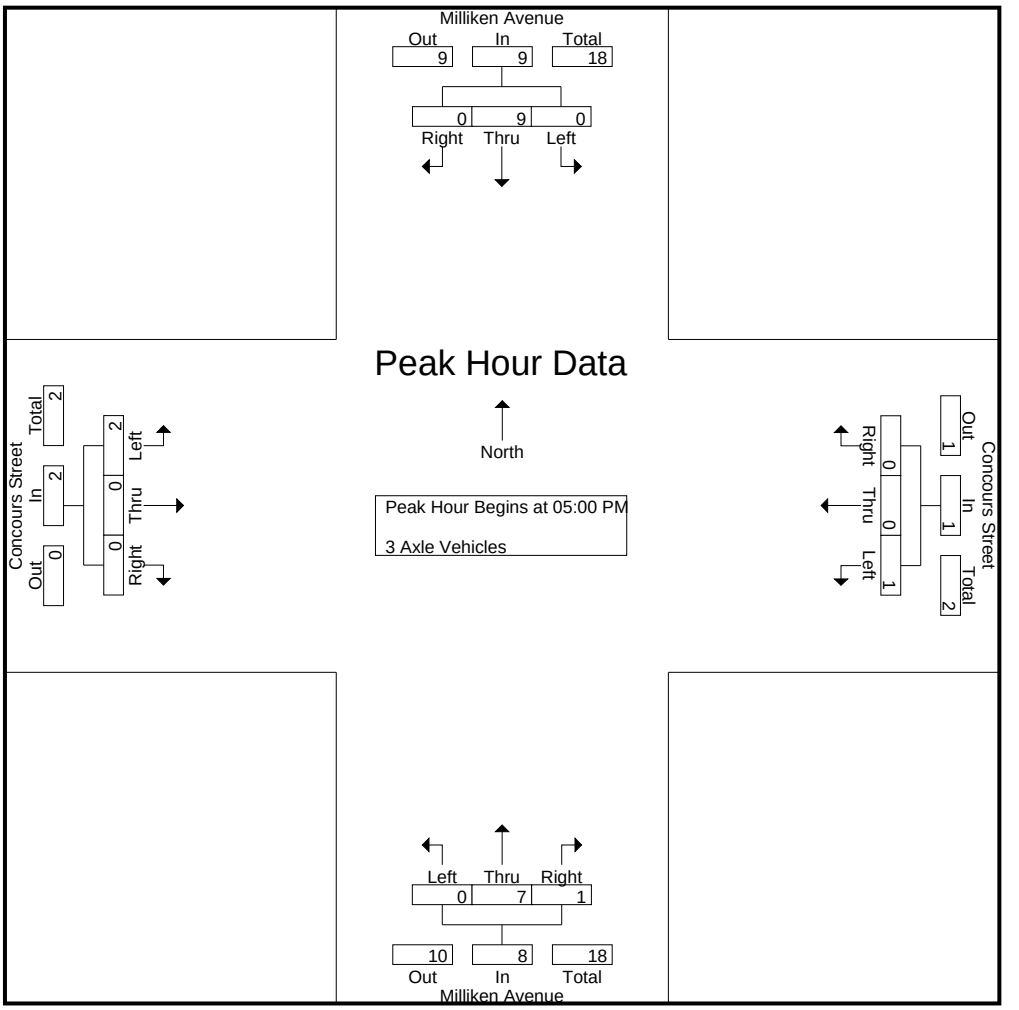

Peak Hour Analysis From 05:00 PM to 05:45 PM - Peak 1 of 1
Peak Hour for Each Approach Begins at:

	05:00 PM				05:00 PM				05:00 PM				05:00 PM			
+0 mins.	0	**6**	0	**6**	0	0	0	0	0	**3**	0	**3**	0	0	0	0
+15 mins.	0	1	0	1	0	0	0	0	0	1	**1**	2	0	0	0	0
+30 mins.	0	0	0	0	**1**	0	0	**1**	0	0	0	0	**2**	0	0	**2**
+45 mins.	0	2	0	2	0	0	0	0	0	3	0	3	0	0	0	0
Total Volume	0	9	0	9	1	0	0	1	0	7	1	8	2	0	0	2
% App. Total	0	100	0		100	0	0		0	87.5	12.5		100	0	0	
PHF	.000	.375	.000	.375	.250	.000	.000	.250	.000	.583	.250	.667	.250	.000	.000	.250

Counts Unlimited, Inc.
PO Box 1178
Corona, CA 92878
(951)268-6268

City of Ontario
N/S: Milliken Avenue
E/W: Concours Street
Weather: Clear

File Name : 11_ONT_Mil_Con PM
Site Code : 00322818
Start Date : 9/20/2022
Page No : 1

Groups Printed- 4+ Axle Trucks

	Milliken Avenue Southbound				Concours Street Westbound				Milliken Avenue Northbound				Concours Street Eastbound				
Start Time	Left	Thru	Right	App. Total	Left	Thru	Right	App. Total	Left	Thru	Right	App. Total	Left	Thru	Right	App. Total	Int. Total
04:00 PM	0	10	1	11	0	0	0	0	0	11	0	11	0	0	0	0	22
04:15 PM	0	14	0	14	0	0	0	0	0	12	0	12	0	0	0	0	26
04:30 PM	0	4	0	4	0	0	0	0	0	8	0	8	0	0	0	0	12
04:45 PM	0	10	1	11	0	0	0	0	0	3	0	3	0	0	0	0	14
Total	0	38	2	40	0	0	0	0	0	34	0	34	0	0	0	0	74
05:00 PM	0	9	1	10	1	0	0	1	0	5	0	5	0	0	0	0	16
05:15 PM	0	7	0	7	1	0	0	1	0	7	0	7	0	0	0	0	15
05:30 PM	0	3	0	3	0	0	0	0	0	6	0	6	0	0	0	0	9
05:45 PM	0	8	0	8	0	0	0	0	0	10	0	10	0	0	0	0	18
Total	0	27	1	28	2	0	0	2	0	28	0	28	0	0	0	0	58
Grand Total	0	65	3	68	2	0	0	2	0	62	0	62	0	0	0	0	132
Apprch %	0	95.6	4.4		100	0	0		0	100	0		0	0	0		
Total %	0	49.2	2.3	51.5	1.5	0	0	1.5	0	47	0	47	0	0	0	0	

	Milliken Avenue Southbound				Concours Street Westbound				Milliken Avenue Northbound				Concours Street Eastbound				
Start Time	Left	Thru	Right	App. Total	Left	Thru	Right	App. Total	Left	Thru	Right	App. Total	Left	Thru	Right	App. Total	Int. Total
Peak Hour Analysis From 05:00 PM to 05:45 PM - Peak 1 of 1																	
Peak Hour for Entire Intersection Begins at 05:00 PM																	
05:00 PM	0	**9**	**1**	**10**	**1**	0	0	**1**	0	5	0	5	0	0	0	0	16
05:15 PM	0	7	0	7	1	0	0	1	0	7	0	7	0	0	0	0	15
05:30 PM	0	3	0	3	0	0	0	0	0	6	0	6	0	0	0	0	9
05:45 PM	0	8	0	8	0	0	0	0	0	**10**	0	**10**	0	0	0	0	**18**
Total Volume	0	27	1	28	2	0	0	2	0	28	0	28	0	0	0	0	58
% App. Total	0	96.4	3.6		100	0	0		0	100	0		0	0	0		
PHF	.000	.750	.250	.700	.500	.000	.000	.500	.000	.700	.000	.700	.000	.000	.000	.000	.806

Counts Unlimited, Inc.
PO Box 1178
Corona, CA 92878
(951)268-6268

City of Ontario
N/S: Milliken Avenue
E/W: Concours Street
Weather: Clear

File Name : 11_ONT_Mil_Con PM
Site Code : 00322818
Start Date : 9/20/2022
Page No : 2

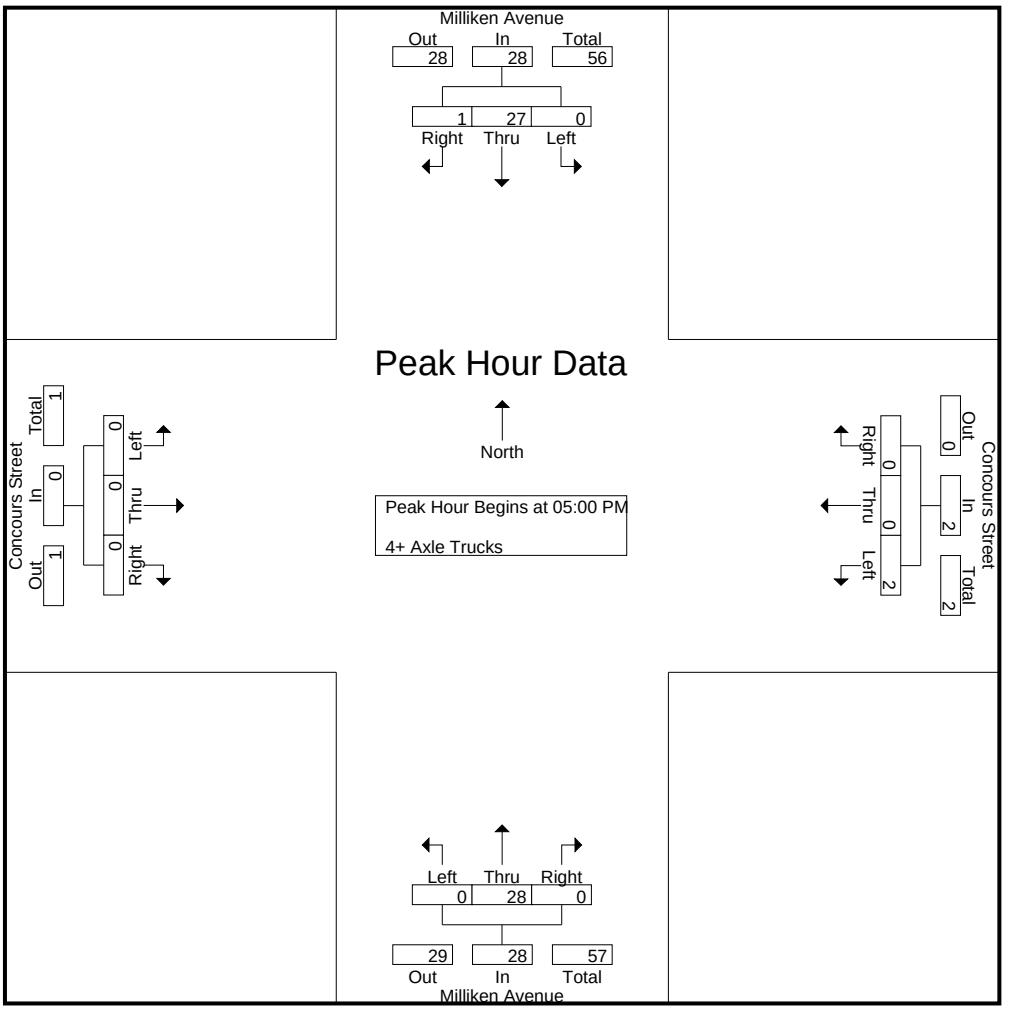

Peak Hour Analysis From 05:00 PM to 05:45 PM - Peak 1 of 1
Peak Hour for Each Approach Begins at:

	05:00 PM				05:00 PM				05:00 PM				05:00 PM			
+0 mins.	0	**9**	**1**	**10**	**1**	0	0	**1**	0	5	0	5	0	0	0	0
+15 mins.	0	7	0	7	1	0	0	1	0	7	0	7	0	0	0	0
+30 mins.	0	3	0	3	0	0	0	0	0	6	0	6	0	0	0	0
+45 mins.	0	8	0	8	0	0	0	0	0	**10**	0	**10**	0	0	0	0
Total Volume	0	27	1	28	2	0	0	2	0	28	0	28	0	0	0	0
% App. Total	0	96.4	3.6		100	0	0		0	100	0		0	0	0	
PHF	.000	.750	.250	.700	.500	.000	.000	.500	.000	.700	.000	.700	.000	.000	.000	.000

Location: Ontario
N/S: Milliken Avenue
E/W: Concours Street

Date: 9/20/2022
Day: Tuesday

PEDESTRIANS

	North Leg Milliken Avenue	East Leg Concours Street	South Leg Milliken Avenue	West Leg Concours Street	
	Pedestrians	Pedestrians	Pedestrians	Pedestrians	
7:00 AM	0	0	0	0	0
7:15 AM	1	3	0	0	4
7:30 AM	0	0	0	0	0
7:45 AM	1	0	0	0	1
8:00 AM	0	0	0	0	0
8:15 AM	0	0	0	0	0
8:30 AM	0	0	1	1	2
8:45 AM	1	2	1	1	5
TOTAL VOLUMES:	3	5	2	2	12

	North Leg Milliken Avenue	East Leg Concours Street	South Leg Milliken Avenue	West Leg Concours Street	
	Pedestrians	Pedestrians	Pedestrians	Pedestrians	
4:00 PM	0	2	2	1	5
4:15 PM	0	1	1	0	2
4:30 PM	2	1	0	0	3
4:45 PM	1	0	0	0	1
5:00 PM	0	0	0	0	0
5:15 PM	0	0	1	0	1
5:30 PM	3	4	1	0	8
5:45 PM	2	1	0	0	3
TOTAL VOLUMES:	8	9	5	1	23

Counts Unlimited, Inc.
PO Box 1178
Corona, CA 92878
951-268-6268

Location: Ontario
N/S: Milliken Avenue
E/W: Concours Street

Date: 9/20/2022
Day: Tuesday

BICYCLES

	Southbound Milliken Avenue			Westbound Concours Street			Northbound Milliken Avenue			Eastbound Concours Street			
	Left	Thru	Right	Left	Thru	Right	Left	Thru	Right	Left	Thru	Right	
7:00 AM	0	1	0	0	0	0	0	0	0	0	0	0	1
7:15 AM	0	0	0	0	0	0	0	0	0	0	0	0	0
7:30 AM	0	0	0	0	0	0	0	0	0	0	0	0	0
7:45 AM	0	0	0	0	0	0	0	0	0	0	0	0	0
8:00 AM	0	0	0	0	0	0	0	0	0	0	0	0	0
8:15 AM	0	0	0	0	0	0	0	0	0	0	0	0	0
8:30 AM	0	0	0	0	0	0	0	1	0	0	0	0	1
8:45 AM	0	1	0	0	0	0	0	0	0	0	0	0	1
TOTAL VOLUMES:	0	2	0	0	0	0	0	1	0	0	0	0	3

	Southbound Milliken Avenue			Westbound Concours Street			Northbound Milliken Avenue			Eastbound Concours Street			
	Left	Thru	Right	Left	Thru	Right	Left	Thru	Right	Left	Thru	Right	
4:00 PM	0	1	0	0	0	0	0	2	0	0	0	0	3
4:15 PM	0	0	0	0	0	0	0	0	0	0	0	0	0
4:30 PM	0	0	0	0	0	0	0	0	0	0	0	0	0
4:45 PM	0	0	0	0	0	0	0	0	0	0	0	0	0
5:00 PM	0	0	0	0	0	0	0	0	0	0	0	0	0
5:15 PM	0	0	0	0	1	0	0	0	1	0	1	0	3
5:30 PM	0	0	0	0	0	0	0	0	0	0	0	1	1
5:45 PM	0	0	0	0	0	0	0	2	0	0	0	0	2
TOTAL VOLUMES:	0	1	0	0	1	0	0	4	1	0	1	1	9

Counts Unlimited, Inc.
PO Box 1178
Corona, CA 92878
951-268-6268

Counts Unlimited, Inc.
PO Box 1178
Corona, CA 92878
(951)268-6268

City of Ontario
N/S: Milliken Avenue
E/W: Inland Empire Boulevard/Mall Drive
Weather: Clear

File Name : 12_ONT_Mil_IEB AM
Site Code : 00322818
Start Date : 9/20/2022
Page No : 1

Groups Printed- Passenger Vehicles - Large 2 Axle Vehicles - 3 Axle Vehicles - 4+ Axle Trucks

	Milliken Avenue Southbound				Mall Drive Westbound				Milliken Avenue Northbound				Inland Empire Boulevard Eastbound				
Start Time	Left	Thru	Right	App. Total	Left	Thru	Right	App. Total	Left	Thru	Right	App. Total	Left	Thru	Right	App. Total	Int. Total
07:00 AM	10	164	21	195	10	11	0	21	49	134	13	196	12	8	14	34	446
07:15 AM	3	161	27	191	14	22	3	39	57	160	18	235	8	3	11	22	487
07:30 AM	5	181	33	219	13	15	6	34	55	215	16	286	10	4	18	32	571
07:45 AM	6	197	33	236	17	25	5	47	87	233	17	337	13	7	11	31	651
Total	24	703	114	841	54	73	14	141	248	742	64	1054	43	22	54	119	2155
08:00 AM	4	188	27	219	7	24	2	33	78	178	17	273	13	14	21	48	573
08:15 AM	7	213	24	244	20	13	6	39	57	233	15	305	9	14	17	40	628
08:30 AM	9	185	29	223	12	13	10	35	88	208	16	312	14	5	22	41	611
08:45 AM	7	196	24	227	13	17	4	34	69	198	32	299	11	6	30	47	607
Total	27	782	104	913	52	67	22	141	292	817	80	1189	47	39	90	176	2419
Grand Total	51	1485	218	1754	106	140	36	282	540	1559	144	2243	90	61	144	295	4574
Apprch %	2.9	84.7	12.4		37.6	49.6	12.8		24.1	69.5	6.4		30.5	20.7	48.8		
Total %	1.1	32.5	4.8	38.3	2.3	3.1	0.8	6.2	11.8	34.1	3.1	49	2	1.3	3.1	6.4	
Passenger Vehicles	40	1342	207	1589	96	136	34	266	525	1413	129	2067	87	50	136	273	4195
% Passenger Vehicles	78.4	90.4	95	90.6	90.6	97.1	94.4	94.3	97.2	90.6	89.6	92.2	96.7	82	94.4	92.5	91.7
Large 2 Axle Vehicles	11	34	8	53	10	4	2	16	10	39	13	62	1	11	3	15	146
% Large 2 Axle Vehicles	21.6	2.3	3.7	3	9.4	2.9	5.6	5.7	1.9	2.5	9	2.8	1.1	18	2.1	5.1	3.2
3 Axle Vehicles	0	21	1	22	0	0	0	0	1	17	0	18	0	0	0	0	40
% 3 Axle Vehicles	0	1.4	0.5	1.3	0	0	0	0	0.2	1.1	0	0.8	0	0	0	0	0.9
4+ Axle Trucks	0	88	2	90	0	0	0	0	4	90	2	96	2	0	5	7	193
% 4+ Axle Trucks	0	5.9	0.9	5.1	0	0	0	0	0.7	5.8	1.4	4.3	2.2	0	3.5	2.4	4.2

	Milliken Avenue Southbound				Mall Drive Westbound				Milliken Avenue Northbound				Inland Empire Boulevard Eastbound				
Start Time	Left	Thru	Right	App. Total	Left	Thru	Right	App. Total	Left	Thru	Right	App. Total	Left	Thru	Right	App. Total	Int. Total
Peak Hour Analysis From 07:00 AM to 08:45 AM - Peak 1 of 1																	
Peak Hour for Entire Intersection Begins at 07:45 AM																	
07:45 AM	6	197	**33**	236	17	**25**	5	**47**	87	**233**	**17**	**337**	13	7	11	31	**651**
08:00 AM	4	188	27	219	7	24	2	33	78	178	17	273	13	**14**	21	**48**	573
08:15 AM	7	**213**	24	**244**	**20**	13	6	39	57	233	15	305	9	14	17	40	628
08:30 AM	**9**	185	29	223	12	13	**10**	35	**88**	208	16	312	**14**	5	**22**	41	611
Total Volume	26	783	113	922	56	75	23	154	310	852	65	1227	49	40	71	160	2463
% App. Total	2.8	84.9	12.3		36.4	48.7	14.9		25.3	69.4	5.3		30.6	25	44.4		
PHF	.722	.919	.856	.945	.700	.750	.575	.819	.881	.914	.956	.910	.875	.714	.807	.833	.946

Counts Unlimited, Inc.
PO Box 1178
Corona, CA 92878
(951)268-6268

City of Ontario
N/S: Milliken Avenue
E/W: Inland Empire Boulevard/Mall Drive
Weather: Clear

File Name : 12_ONT_Mil_IEB AM
Site Code : 00322818
Start Date : 9/20/2022
Page No : 2

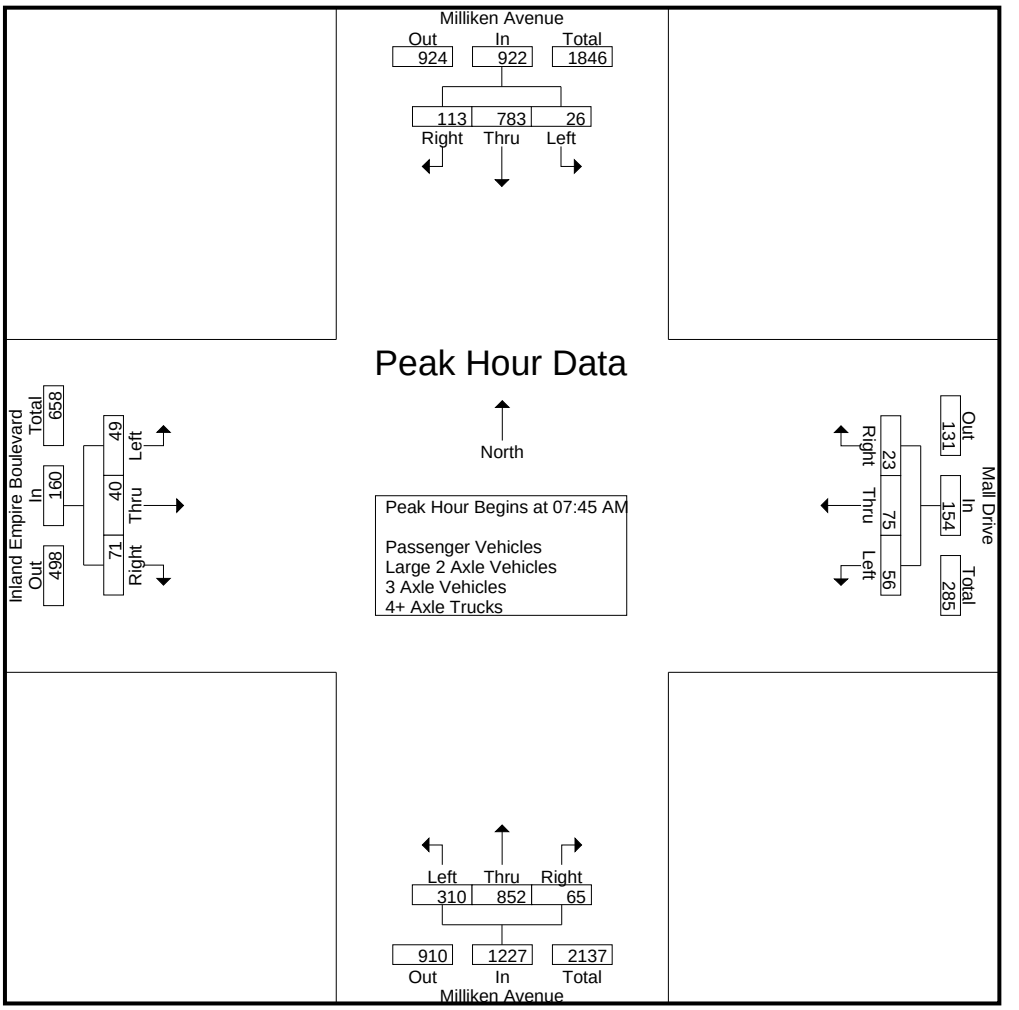

Peak Hour Analysis From 07:00 AM to 08:45 AM - Peak 1 of 1
Peak Hour for Each Approach Begins at:

	07:45 AM				07:45 AM				07:45 AM				08:00 AM			
+0 mins.	6	197	**33**	236	17	**25**	5	**47**	87	**233**	**17**	**337**	13	**14**	21	**48**
+15 mins.	4	188	27	219	7	24	2	33	78	178	17	273	9	14	17	40
+30 mins.	7	**213**	24	**244**	**20**	13	6	39	57	233	15	305	**14**	5	22	41
+45 mins.	**9**	185	29	223	12	13	**10**	35	**88**	208	16	312	11	6	**30**	47
Total Volume	26	783	113	922	56	75	23	154	310	852	65	1227	47	39	90	176
% App. Total	2.8	84.9	12.3		36.4	48.7	14.9		25.3	69.4	5.3		26.7	22.2	51.1	
PHF	.722	.919	.856	.945	.700	.750	.575	.819	.881	.914	.956	.910	.839	.696	.750	.917

Counts Unlimited, Inc.
PO Box 1178
Corona, CA 92878
(951)268-6268

City of Ontario
N/S: Milliken Avenue
E/W: Inland Empire Boulevard/Mall Drive
Weather: Clear

File Name : 12_ONT_Mil_IEB AM
Site Code : 00322818
Start Date : 9/20/2022
Page No : 1

Groups Printed- Passenger Vehicles

	Milliken Avenue Southbound				Mall Drive Westbound				Milliken Avenue Northbound				Inland Empire Boulevard Eastbound				
Start Time	Left	Thru	Right	App. Total	Left	Thru	Right	App. Total	Left	Thru	Right	App. Total	Left	Thru	Right	App. Total	Int. Total
07:00 AM	9	146	20	175	9	10	0	19	47	120	10	177	9	5	14	28	399
07:15 AM	2	149	26	177	11	21	3	35	54	143	18	215	8	3	10	21	448
07:30 AM	3	161	31	195	12	15	5	32	55	201	11	267	10	3	17	30	524
07:45 AM	4	175	32	211	16	24	5	45	84	216	15	315	13	5	11	29	600
Total	18	631	109	758	48	70	13	131	240	680	54	974	40	16	52	108	1971
08:00 AM	3	176	26	205	7	23	2	32	76	163	16	255	13	13	21	47	539
08:15 AM	6	197	24	227	19	13	5	37	56	212	14	282	9	12	15	36	582
08:30 AM	6	160	25	191	10	13	10	33	87	179	16	282	14	4	20	38	544
08:45 AM	7	178	23	208	12	17	4	33	66	179	29	274	11	5	28	44	559
Total	22	711	98	831	48	66	21	135	285	733	75	1093	47	34	84	165	2224
Grand Total	40	1342	207	1589	96	136	34	266	525	1413	129	2067	87	50	136	273	4195
Apprch %	2.5	84.5	13		36.1	51.1	12.8		25.4	68.4	6.2		31.9	18.3	49.8		
Total %	1	32	4.9	37.9	2.3	3.2	0.8	6.3	12.5	33.7	3.1	49.3	2.1	1.2	3.2	6.5	

	Milliken Avenue Southbound				Mall Drive Westbound				Milliken Avenue Northbound				Inland Empire Boulevard Eastbound				
Start Time	Left	Thru	Right	App. Total	Left	Thru	Right	App. Total	Left	Thru	Right	App. Total	Left	Thru	Right	App. Total	Int. Total
Peak Hour Analysis From 07:45 AM to 08:30 AM - Peak 1 of 1																	
Peak Hour for Entire Intersection Begins at 07:45 AM																	
07:45 AM	4	175	**32**	211	16	**24**	5	**45**	84	**216**	15	**315**	13	5	11	29	**600**
08:00 AM	3	176	26	205	7	23	2	32	76	163	**16**	255	13	**13**	**21**	**47**	539
08:15 AM	**6**	**197**	24	**227**	**19**	13	5	37	56	212	14	282	9	12	15	36	582
08:30 AM	6	160	25	191	10	13	**10**	33	**87**	179	16	282	**14**	4	20	38	544
Total Volume	19	708	107	834	52	73	22	147	303	770	61	1134	49	34	67	150	2265
% App. Total	2.3	84.9	12.8		35.4	49.7	15		26.7	67.9	5.4		32.7	22.7	44.7		
PHF	.792	.898	.836	.919	.684	.760	.550	.817	.871	.891	.953	.900	.875	.654	.798	.798	.944

Counts Unlimited, Inc.
PO Box 1178
Corona, CA 92878
(951)268-6268

City of Ontario
N/S: Milliken Avenue
E/W: Inland Empire Boulevard/Mall Drive
Weather: Clear

File Name : 12_ONT_Mil_IEB AM
Site Code : 00322818
Start Date : 9/20/2022
Page No : 2

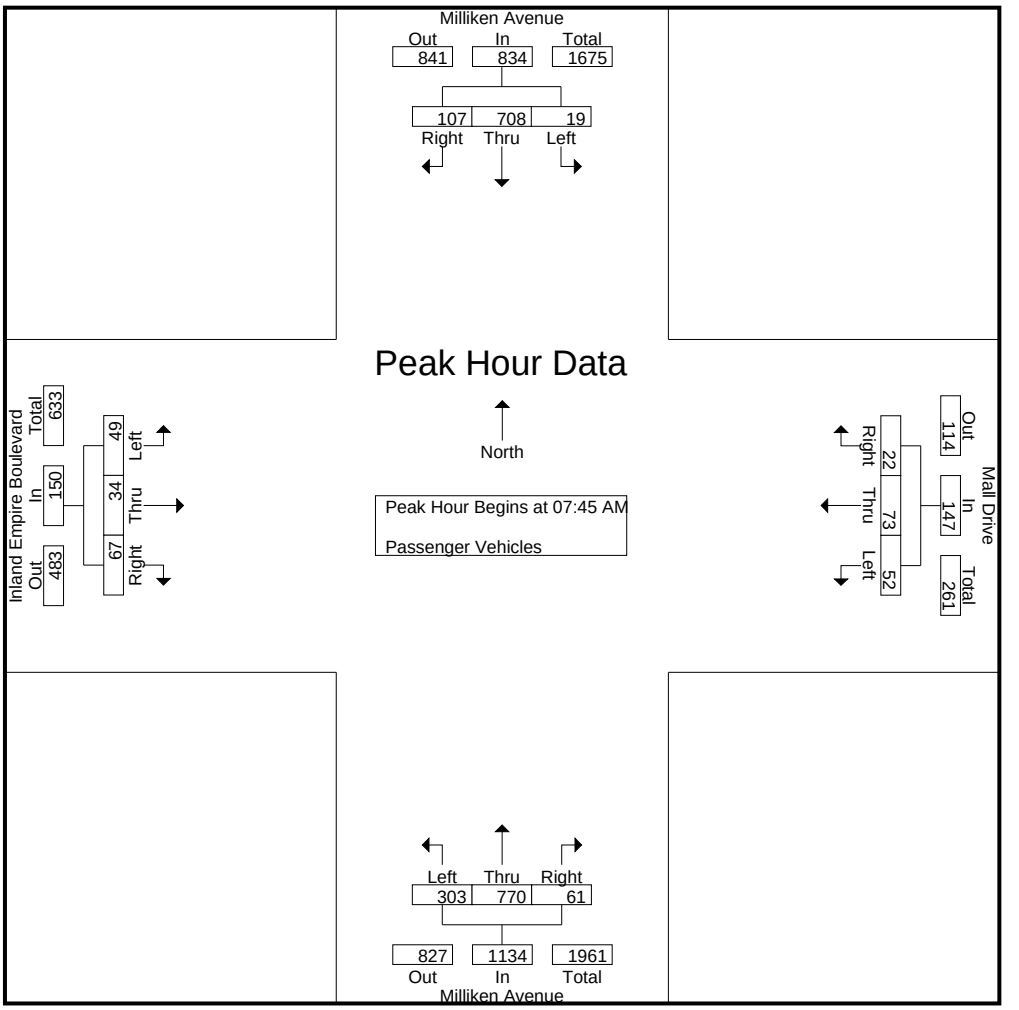

Peak Hour Analysis From 07:45 AM to 08:30 AM - Peak 1 of 1
Peak Hour for Each Approach Begins at:

	07:45 AM				07:45 AM				07:45 AM				07:45 AM			
+0 mins.	4	175	**32**	211	16	**24**	5	**45**	84	**216**	15	**315**	13	5	11	29
+15 mins.	3	176	26	205	7	23	2	32	76	163	**16**	255	13	**13**	**21**	**47**
+30 mins.	**6**	**197**	24	**227**	**19**	13	5	37	56	212	14	282	9	12	15	36
+45 mins.	6	160	25	191	10	13	**10**	33	**87**	179	16	282	**14**	4	20	38
Total Volume	19	708	107	834	52	73	22	147	303	770	61	1134	49	34	67	150
% App. Total	2.3	84.9	12.8		35.4	49.7	15		26.7	67.9	5.4		32.7	22.7	44.7	
PHF	.792	.898	.836	.919	.684	.760	.550	.817	.871	.891	.953	.900	.875	.654	.798	.798

Counts Unlimited, Inc.
PO Box 1178
Corona, CA 92878
(951)268-6268

City of Ontario
N/S: Milliken Avenue
E/W: Inland Empire Boulevard/Mall Drive
Weather: Clear

File Name : 12_ONT_Mil_IEB AM
Site Code : 00322818
Start Date : 9/20/2022
Page No : 1

Groups Printed- Large 2 Axle Vehicles

	Milliken Avenue Southbound				Mall Drive Westbound				Milliken Avenue Northbound				Inland Empire Boulevard Eastbound				
Start Time	Left	Thru	Right	App. Total	Left	Thru	Right	App. Total	Left	Thru	Right	App. Total	Left	Thru	Right	App. Total	Int. Total
07:00 AM	1	7	1	9	1	1	0	2	1	3	3	7	1	3	0	4	22
07:15 AM	1	0	1	2	3	1	0	4	2	5	0	7	0	0	0	0	13
07:30 AM	2	8	2	12	1	0	1	2	0	5	3	8	0	1	0	1	23
07:45 AM	2	6	1	9	1	1	0	2	3	3	2	8	0	2	0	2	21
Total	6	21	5	32	6	3	1	10	6	16	8	30	1	6	0	7	79
08:00 AM	1	3	1	5	0	1	0	1	1	2	1	4	0	1	0	1	11
08:15 AM	1	5	0	6	1	0	1	2	0	5	1	6	0	2	1	3	17
08:30 AM	3	2	1	6	2	0	0	2	1	8	0	9	0	1	0	1	18
08:45 AM	0	3	1	4	1	0	0	1	2	8	3	13	0	1	2	3	21
Total	5	13	3	21	4	1	1	6	4	23	5	32	0	5	3	8	67
Grand Total	11	34	8	53	10	4	2	16	10	39	13	62	1	11	3	15	146
Apprch %	20.8	64.2	15.1		62.5	25	12.5		16.1	62.9	21		6.7	73.3	20		
Total %	7.5	23.3	5.5	36.3	6.8	2.7	1.4	11	6.8	26.7	8.9	42.5	0.7	7.5	2.1	10.3	

	Milliken Avenue Southbound				Mall Drive Westbound				Milliken Avenue Northbound				Inland Empire Boulevard Eastbound				
Start Time	Left	Thru	Right	App. Total	Left	Thru	Right	App. Total	Left	Thru	Right	App. Total	Left	Thru	Right	App. Total	Int. Total
Peak Hour Analysis From 07:45 AM to 08:30 AM - Peak 1 of 1																	
Peak Hour for Entire Intersection Begins at 07:45 AM																	
07:45 AM	2	**6**	**1**	**9**	1	**1**	0	**2**	**3**	3	**2**	8	0	**2**	0	2	**21**
08:00 AM	1	3	1	5	0	1	0	1	1	2	1	4	0	1	0	1	11
08:15 AM	1	5	0	6	1	0	**1**	2	0	5	1	6	0	2	**1**	**3**	17
08:30 AM	**3**	2	1	6	**2**	0	0	2	1	**8**	0	**9**	0	1	0	1	18
Total Volume	7	16	3	26	4	2	1	7	5	18	4	27	0	6	1	7	67
% App. Total	26.9	61.5	11.5		57.1	28.6	14.3		18.5	66.7	14.8		0	85.7	14.3		
PHF	.583	.667	.750	.722	.500	.500	.250	.875	.417	.563	.500	.750	.000	.750	.250	.583	.798

Counts Unlimited, Inc.
PO Box 1178
Corona, CA 92878
(951)268-6268

City of Ontario
N/S: Milliken Avenue
E/W: Inland Empire Boulevard/Mall Drive
Weather: Clear

File Name : 12_ONT_Mil_IEB AM
Site Code : 00322818
Start Date : 9/20/2022
Page No : 2

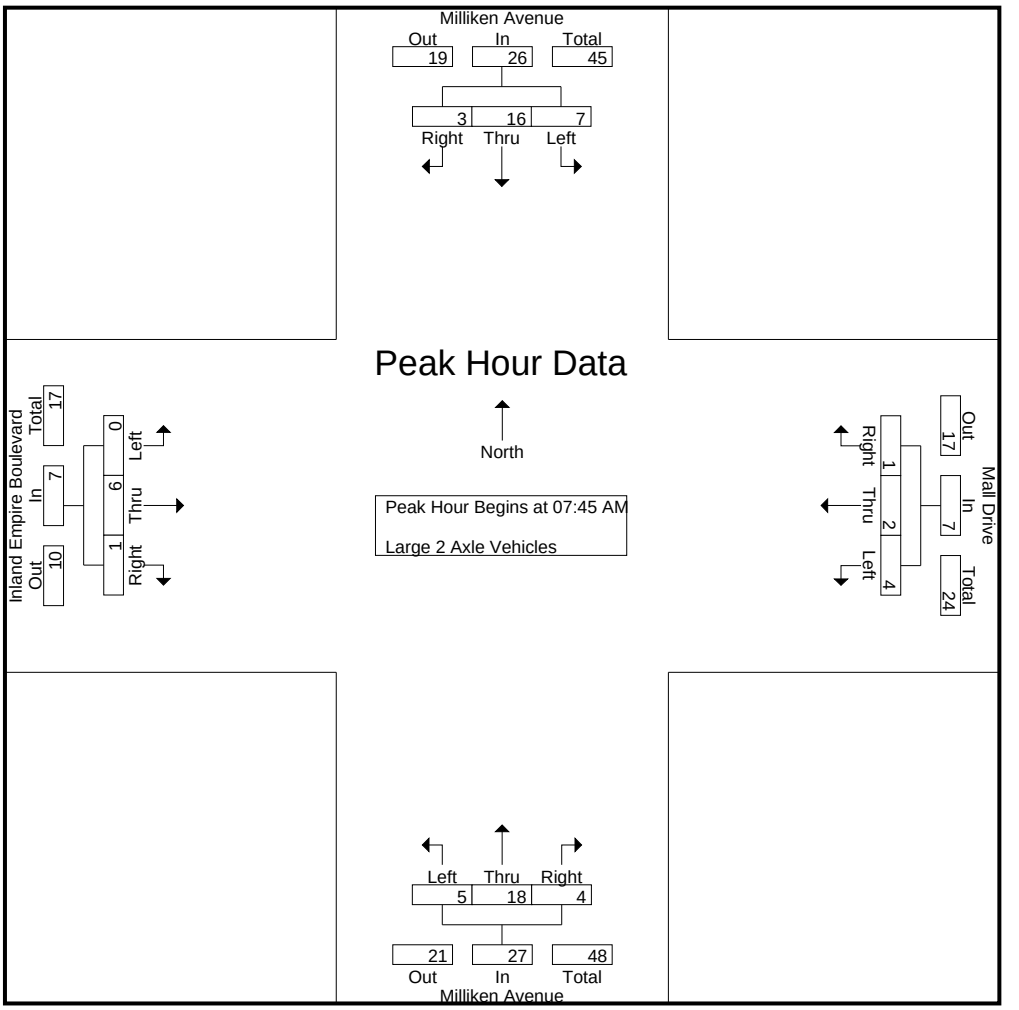

Peak Hour Analysis From 07:45 AM to 08:30 AM - Peak 1 of 1
Peak Hour for Each Approach Begins at:

	07:45 AM				07:45 AM				07:45 AM				07:45 AM			
+0 mins.	2	**6**	**1**	**9**	1	**1**	0	**2**	**3**	3	**2**	8	0	**2**	0	2
+15 mins.	1	3	1	5	0	1	0	1	1	2	1	4	0	1	0	1
+30 mins.	1	5	0	6	1	0	**1**	2	0	5	1	6	0	2	**1**	**3**
+45 mins.	**3**	2	1	6	**2**	0	0	2	1	**8**	0	**9**	0	1	0	1
Total Volume	7	16	3	26	4	2	1	7	5	18	4	27	0	6	1	7
% App. Total	26.9	61.5	11.5		57.1	28.6	14.3		18.5	66.7	14.8		0	85.7	14.3	
PHF	.583	.667	.750	.722	.500	.500	.250	.875	.417	.563	.500	.750	.000	.750	.250	.583

Counts Unlimited, Inc.
PO Box 1178
Corona, CA 92878
(951)268-6268

City of Ontario
N/S: Milliken Avenue
E/W: Inland Empire Boulevard/Mall Drive
Weather: Clear

File Name : 12_ONT_Mil_IEB AM
Site Code : 00322818
Start Date : 9/20/2022
Page No : 1

Groups Printed- 3 Axle Vehicles

	Milliken Avenue Southbound				Mall Drive Westbound				Milliken Avenue Northbound				Inland Empire Boulevard Eastbound				
Start Time	Left	Thru	Right	App. Total	Left	Thru	Right	App. Total	Left	Thru	Right	App. Total	Left	Thru	Right	App. Total	Int. Total
07:00 AM	0	1	0	1	0	0	0	0	0	1	0	1	0	0	0	0	2
07:15 AM	0	3	0	3	0	0	0	0	0	1	0	1	0	0	0	0	4
07:30 AM	0	2	0	2	0	0	0	0	0	1	0	1	0	0	0	0	3
07:45 AM	0	3	0	3	0	0	0	0	0	2	0	2	0	0	0	0	5
Total	0	9	0	9	0	0	0	0	0	5	0	5	0	0	0	0	14
08:00 AM	0	2	0	2	0	0	0	0	0	2	0	2	0	0	0	0	4
08:15 AM	0	0	0	0	0	0	0	0	1	4	0	5	0	0	0	0	5
08:30 AM	0	9	1	10	0	0	0	0	0	5	0	5	0	0	0	0	15
08:45 AM	0	1	0	1	0	0	0	0	0	1	0	1	0	0	0	0	2
Total	0	12	1	13	0	0	0	0	1	12	0	13	0	0	0	0	26
Grand Total	0	21	1	22	0	0	0	0	1	17	0	18	0	0	0	0	40
Apprch %	0	95.5	4.5		0	0	0		5.6	94.4	0		0	0	0		
Total %	0	52.5	2.5	55	0	0	0	0	2.5	42.5	0	45	0	0	0	0	

	Milliken Avenue Southbound				Mall Drive Westbound				Milliken Avenue Northbound				Inland Empire Boulevard Eastbound				
Start Time	Left	Thru	Right	App. Total	Left	Thru	Right	App. Total	Left	Thru	Right	App. Total	Left	Thru	Right	App. Total	Int. Total
Peak Hour Analysis From 07:45 AM to 08:30 AM - Peak 1 of 1																	
Peak Hour for Entire Intersection Begins at 07:45 AM																	
07:45 AM	0	3	0	3	0	0	0	0	0	2	0	2	0	0	0	0	5
08:00 AM	0	2	0	2	0	0	0	0	0	2	0	2	0	0	0	0	4
08:15 AM	0	0	0	0	0	0	0	0	**1**	4	0	**5**	0	0	0	0	5
08:30 AM	0	**9**	**1**	**10**	0	0	0	0	0	**5**	0	5	0	0	0	0	**15**
Total Volume	0	14	1	15	0	0	0	0	1	13	0	14	0	0	0	0	29
% App. Total	0	93.3	6.7		0	0	0		7.1	92.9	0		0	0	0		
PHF	.000	.389	.250	.375	.000	.000	.000	.000	.250	.650	.000	.700	.000	.000	.000	.000	.483

Counts Unlimited, Inc.
PO Box 1178
Corona, CA 92878
(951)268-6268

City of Ontario
N/S: Milliken Avenue
E/W: Inland Empire Boulevard/Mall Drive
Weather: Clear

File Name : 12_ONT_Mil_IEB AM
Site Code : 00322818
Start Date : 9/20/2022
Page No : 2

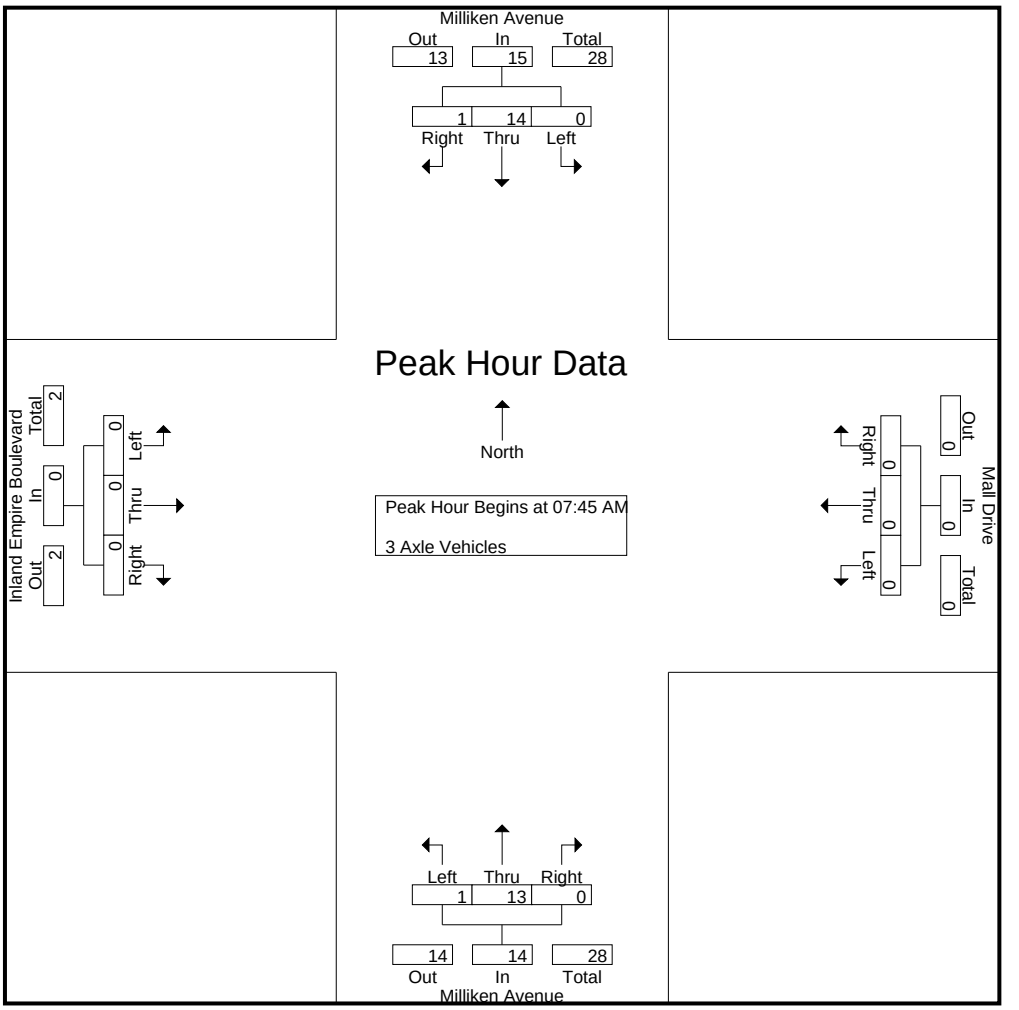

Peak Hour Analysis From 07:45 AM to 08:30 AM - Peak 1 of 1
Peak Hour for Each Approach Begins at:

	07:45 AM				07:45 AM				07:45 AM				07:45 AM			
+0 mins.	0	3	0	3	0	0	0	0	0	2	0	2	0	0	0	0
+15 mins.	0	2	0	2	0	0	0	0	0	2	0	2	0	0	0	0
+30 mins.	0	0	0	0	0	0	0	0	**1**	4	0	**5**	0	0	0	0
+45 mins.	0	**9**	**1**	**10**	0	0	0	0	0	**5**	0	5	0	0	0	0
Total Volume	0	14	1	15	0	0	0	0	1	13	0	14	0	0	0	0
% App. Total	0	93.3	6.7		0	0	0		7.1	92.9	0		0	0	0	
PHF	.000	.389	.250	.375	.000	.000	.000	.000	.250	.650	.000	.700	.000	.000	.000	.000

Counts Unlimited, Inc.
PO Box 1178
Corona, CA 92878
(951)268-6268

City of Ontario
N/S: Milliken Avenue
E/W: Inland Empire Boulevard/Mall Drive
Weather: Clear

File Name : 12_ONT_Mil_IEB AM
Site Code : 00322818
Start Date : 9/20/2022
Page No : 1

Groups Printed- 4+ Axle Trucks

	Milliken Avenue Southbound				Mall Drive Westbound				Milliken Avenue Northbound				Inland Empire Boulevard Eastbound				
Start Time	Left	Thru	Right	App. Total	Left	Thru	Right	App. Total	Left	Thru	Right	App. Total	Left	Thru	Right	App. Total	Int. Total
07:00 AM	0	10	0	10	0	0	0	0	1	10	0	11	2	0	0	2	23
07:15 AM	0	9	0	9	0	0	0	0	1	11	0	12	0	0	1	1	22
07:30 AM	0	10	0	10	0	0	0	0	0	8	2	10	0	0	1	1	21
07:45 AM	0	13	0	13	0	0	0	0	0	12	0	12	0	0	0	0	25
Total	0	42	0	42	0	0	0	0	2	41	2	45	2	0	2	4	91
08:00 AM	0	7	0	7	0	0	0	0	1	11	0	12	0	0	0	0	19
08:15 AM	0	11	0	11	0	0	0	0	0	12	0	12	0	0	1	1	24
08:30 AM	0	14	2	16	0	0	0	0	0	16	0	16	0	0	2	2	34
08:45 AM	0	14	0	14	0	0	0	0	1	10	0	11	0	0	0	0	25
Total	0	46	2	48	0	0	0	0	2	49	0	51	0	0	3	3	102
Grand Total	0	88	2	90	0	0	0	0	4	90	2	96	2	0	5	7	193
Apprch %	0	97.8	2.2		0	0	0		4.2	93.8	2.1		28.6	0	71.4		
Total %	0	45.6	1	46.6	0	0	0	0	2.1	46.6	1	49.7	1	0	2.6	3.6	

	Milliken Avenue Southbound				Mall Drive Westbound				Milliken Avenue Northbound				Inland Empire Boulevard Eastbound				
Start Time	Left	Thru	Right	App. Total	Left	Thru	Right	App. Total	Left	Thru	Right	App. Total	Left	Thru	Right	App. Total	Int. Total
Peak Hour Analysis From 07:45 AM to 08:30 AM - Peak 1 of 1																	
Peak Hour for Entire Intersection Begins at 07:45 AM																	
07:45 AM	0	13	0	13	0	0	0	0	0	12	0	12	0	0	0	0	25
08:00 AM	0	7	0	7	0	0	0	0	**1**	11	0	12	0	0	0	0	19
08:15 AM	0	11	0	11	0	0	0	0	0	12	0	12	0	0	1	1	24
08:30 AM	0	**14**	**2**	**16**	0	0	0	0	0	**16**	0	**16**	0	0	**2**	**2**	**34**
Total Volume	0	45	2	47	0	0	0	0	1	51	0	52	0	0	3	3	102
% App. Total	0	95.7	4.3		0	0	0		1.9	98.1	0		0	0	100		
PHF	.000	.804	.250	.734	.000	.000	.000	.000	.250	.797	.000	.813	.000	.000	.375	.375	.750

Counts Unlimited, Inc.
PO Box 1178
Corona, CA 92878
(951)268-6268

City of Ontario
N/S: Milliken Avenue
E/W: Inland Empire Boulevard/Mall Drive
Weather: Clear

File Name : 12_ONT_Mil_IEB AM
Site Code : 00322818
Start Date : 9/20/2022
Page No : 2

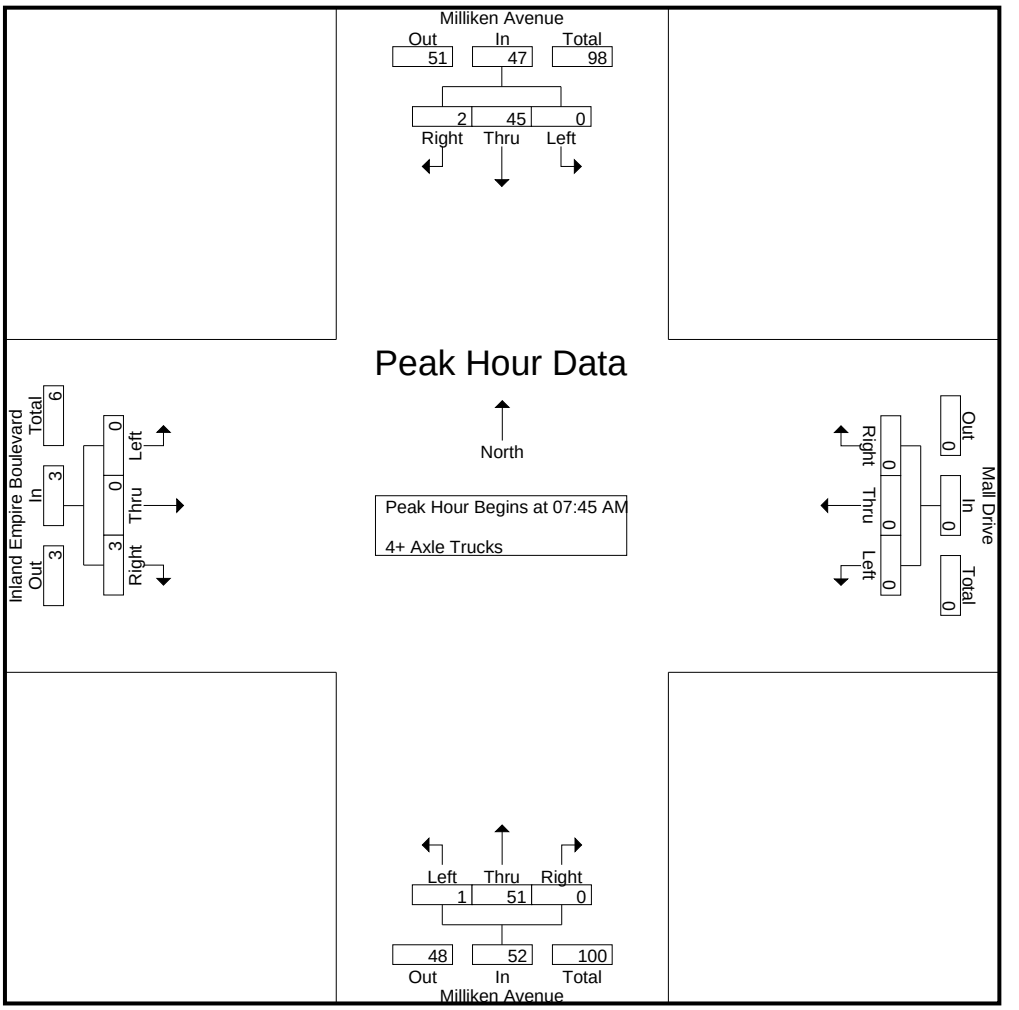

Peak Hour Analysis From 07:45 AM to 08:30 AM - Peak 1 of 1
Peak Hour for Each Approach Begins at:

	07:45 AM				07:45 AM				07:45 AM				07:45 AM			
+0 mins.	0	13	0	13	0	0	0	0	0	12	0	12	0	0	0	0
+15 mins.	0	7	0	7	0	0	0	0	**1**	11	0	12	0	0	0	0
+30 mins.	0	11	0	11	0	0	0	0	0	12	0	12	0	0	1	1
+45 mins.	0	**14**	**2**	**16**	0	0	0	0	0	**16**	0	**16**	0	0	**2**	**2**
Total Volume	0	45	2	47	0	0	0	0	1	51	0	52	0	0	3	3
% App. Total	0	95.7	4.3		0	0	0		1.9	98.1	0		0	0	100	
PHF	.000	.804	.250	.734	.000	.000	.000	.000	.250	.797	.000	.813	.000	.000	.375	.375

Counts Unlimited, Inc.
PO Box 1178
Corona, CA 92878
(951)268-6268

City of Ontario
N/S: Milliken Avenue
E/W: Inland Empire Boulevard/Mall Drive
Weather: Clear

File Name : 12_ONT_Mil_IEB PM
Site Code : 00322818
Start Date : 9/20/2022
Page No : 1

Groups Printed- Passenger Vehicles - Large 2 Axle Vehicles - 3 Axle Vehicles - 4+ Axle Trucks

	Milliken Avenue Southbound				Mall Drive Westbound				Milliken Avenue Northbound				Inland Empire Boulevard Eastbound				
Start Time	Left	Thru	Right	App. Total	Left	Thru	Right	App. Total	Left	Thru	Right	App. Total	Left	Thru	Right	App. Total	Int. Total
04:00 PM	19	266	16	301	38	16	30	84	76	284	56	416	48	49	53	150	951
04:15 PM	23	234	23	280	38	16	19	73	50	279	61	390	45	45	42	132	875
04:30 PM	28	250	18	296	43	21	24	88	58	264	63	385	54	59	58	171	940
04:45 PM	21	262	19	302	51	24	14	89	60	292	74	426	48	54	64	166	983
Total	91	1012	76	1179	170	77	87	334	244	1119	254	1617	195	207	217	619	3749
05:00 PM	24	281	22	327	34	18	21	73	69	278	59	406	52	49	72	173	979
05:15 PM	13	299	17	329	46	16	19	81	67	344	50	461	52	46	79	177	1048
05:30 PM	15	235	13	263	45	16	15	76	65	321	65	451	38	38	48	124	914
05:45 PM	19	229	10	258	49	12	13	74	60	298	72	430	34	41	40	115	877
Total	71	1044	62	1177	174	62	68	304	261	1241	246	1748	176	174	239	589	3818
Grand Total	162	2056	138	2356	344	139	155	638	505	2360	500	3365	371	381	456	1208	7567
Apprch %	6.9	87.3	5.9		53.9	21.8	24.3		15	70.1	14.9		30.7	31.5	37.7		
Total %	2.1	27.2	1.8	31.1	4.5	1.8	2	8.4	6.7	31.2	6.6	44.5	4.9	5	6	16	
Passenger Vehicles	148	1946	132	2226	341	135	155	631	493	2246	490	3229	369	370	449	1188	7274
% Passenger Vehicles	91.4	94.6	95.7	94.5	99.1	97.1	100	98.9	97.6	95.2	98	96	99.5	97.1	98.5	98.3	96.1
Large 2 Axle Vehicles	14	34	4	52	1	4	0	5	6	31	7	44	1	10	5	16	117
% Large 2 Axle Vehicles	8.6	1.7	2.9	2.2	0.3	2.9	0	0.8	1.2	1.3	1.4	1.3	0.3	2.6	1.1	1.3	1.5
3 Axle Vehicles	0	9	0	9	2	0	0	2	4	19	3	26	1	1	1	3	40
% 3 Axle Vehicles	0	0.4	0	0.4	0.6	0	0	0.3	0.8	0.8	0.6	0.8	0.3	0.3	0.2	0.2	0.5
4+ Axle Trucks	0	67	2	69	0	0	0	0	2	64	0	66	0	0	1	1	136
% 4+ Axle Trucks	0	3.3	1.4	2.9	0	0	0	0	0.4	2.7	0	2	0	0	0.2	0.1	1.8

	Milliken Avenue Southbound				Mall Drive Westbound				Milliken Avenue Northbound				Inland Empire Boulevard Eastbound				
Start Time	Left	Thru	Right	App. Total	Left	Thru	Right	App. Total	Left	Thru	Right	App. Total	Left	Thru	Right	App. Total	Int. Total
Peak Hour Analysis From 04:00 PM to 05:45 PM - Peak 1 of 1																	
Peak Hour for Entire Intersection Begins at 04:30 PM																	
04:30 PM	**28**	250	18	296	43	21	**24**	88	58	264	63	385	**54**	**59**	58	171	940
04:45 PM	21	262	19	302	**51**	**24**	14	**89**	60	292	**74**	426	48	54	64	166	983
05:00 PM	24	281	**22**	327	34	18	21	73	**69**	278	59	406	52	49	72	173	979
05:15 PM	13	**299**	17	**329**	46	16	19	81	67	**344**	50	**461**	52	46	**79**	**177**	**1048**
Total Volume	86	1092	76	1254	174	79	78	331	254	1178	246	1678	206	208	273	687	3950
% App. Total	6.9	87.1	6.1		52.6	23.9	23.6		15.1	70.2	14.7		30	30.3	39.7		
PHF	.768	.913	.864	.953	.853	.823	.813	.930	.920	.856	.831	.910	.954	.881	.864	.970	.942

Counts Unlimited, Inc.
PO Box 1178
Corona, CA 92878
(951)268-6268

City of Ontario
N/S: Milliken Avenue
E/W: Inland Empire Boulevard/Mall Drive
Weather: Clear

File Name : 12_ONT_Mil_IEB PM
Site Code : 00322818
Start Date : 9/20/2022
Page No : 2

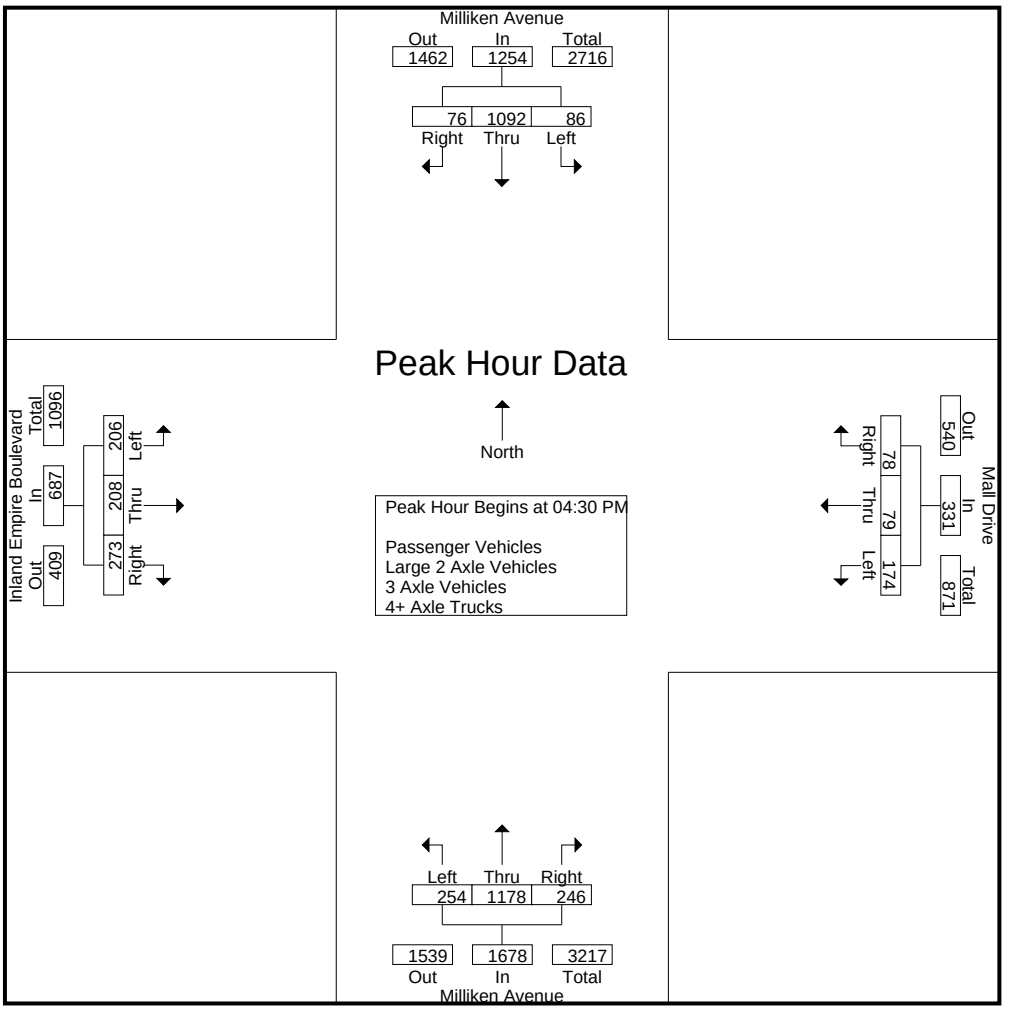

Peak Hour Analysis From 04:00 PM to 05:45 PM - Peak 1 of 1
Peak Hour for Each Approach Begins at:

	04:30 PM				04:00 PM				05:00 PM				04:30 PM			
+0 mins.	**28**	250	18	296	38	16	**30**	84	**69**	278	59	406	**54**	**59**	58	171
+15 mins.	21	262	19	302	38	16	19	73	67	**344**	50	**461**	48	54	64	166
+30 mins.	24	281	**22**	327	43	21	24	88	65	321	65	451	52	49	72	173
+45 mins.	13	**299**	17	**329**	**51**	**24**	14	**89**	60	298	**72**	430	52	46	**79**	**177**
Total Volume	86	1092	76	1254	170	77	87	334	261	1241	246	1748	206	208	273	687
% App. Total	6.9	87.1	6.1		50.9	23.1	26		14.9	71	14.1		30	30.3	39.7	
PHF	.768	.913	.864	.953	.833	.802	.725	.938	.946	.902	.854	.948	.954	.881	.864	.970

Counts Unlimited, Inc.
PO Box 1178
Corona, CA 92878
(951)268-6268

City of Ontario
N/S: Milliken Avenue
E/W: Inland Empire Boulevard/Mall Drive
Weather: Clear

File Name : 12_ONT_Mil_IEB PM
Site Code : 00322818
Start Date : 9/20/2022
Page No : 1

Groups Printed- Passenger Vehicles

	Milliken Avenue Southbound				Mall Drive Westbound				Milliken Avenue Northbound				Inland Empire Boulevard Eastbound				
Start Time	Left	Thru	Right	App. Total	Left	Thru	Right	App. Total	Left	Thru	Right	App. Total	Left	Thru	Right	App. Total	Int. Total
04:00 PM	17	250	16	283	38	16	30	84	74	265	54	393	48	48	50	146	906
04:15 PM	21	218	22	261	37	16	19	72	49	259	61	369	45	44	42	131	833
04:30 PM	26	239	18	283	43	21	24	88	57	248	60	365	53	58	57	168	904
04:45 PM	20	248	17	285	50	24	14	88	57	281	74	412	48	53	63	164	949
Total	84	955	73	1112	168	77	87	332	237	1053	249	1539	194	203	212	609	3592
05:00 PM	21	268	21	310	34	18	21	73	69	268	58	395	51	48	72	171	949
05:15 PM	12	281	16	309	46	15	19	80	64	329	50	443	52	43	78	173	1005
05:30 PM	15	227	13	255	45	15	15	75	64	311	64	439	38	37	48	123	892
05:45 PM	16	215	9	240	48	10	13	71	59	285	69	413	34	39	39	112	836
Total	64	991	59	1114	173	58	68	299	256	1193	241	1690	175	167	237	579	3682
Grand Total	148	1946	132	2226	341	135	155	631	493	2246	490	3229	369	370	449	1188	7274
Apprch %	6.6	87.4	5.9		54	21.4	24.6		15.3	69.6	15.2		31.1	31.1	37.8		
Total %	2	26.8	1.8	30.6	4.7	1.9	2.1	8.7	6.8	30.9	6.7	44.4	5.1	5.1	6.2	16.3	

	Milliken Avenue Southbound				Mall Drive Westbound				Milliken Avenue Northbound				Inland Empire Boulevard Eastbound				
Start Time	Left	Thru	Right	App. Total	Left	Thru	Right	App. Total	Left	Thru	Right	App. Total	Left	Thru	Right	App. Total	Int. Total
Peak Hour Analysis From 04:30 PM to 05:15 PM - Peak 1 of 1																	
Peak Hour for Entire Intersection Begins at 04:30 PM																	
04:30 PM	**26**	239	18	283	43	21	**24**	**88**	57	248	60	365	**53**	**58**	57	168	904
04:45 PM	20	248	17	285	**50**	**24**	14	88	57	281	**74**	412	48	53	63	164	949
05:00 PM	21	268	**21**	**310**	34	18	21	73	**69**	268	58	395	51	48	72	171	949
05:15 PM	12	**281**	16	309	46	15	19	80	64	**329**	50	**443**	52	43	**78**	**173**	**1005**
Total Volume	79	1036	72	1187	173	78	78	329	247	1126	242	1615	204	202	270	676	3807
% App. Total	6.7	87.3	6.1		52.6	23.7	23.7		15.3	69.7	15		30.2	29.9	39.9		
PHF	.760	.922	.857	.957	.865	.813	.813	.935	.895	.856	.818	.911	.962	.871	.865	.977	.947

Counts Unlimited, Inc.
PO Box 1178
Corona, CA 92878
(951)268-6268

City of Ontario
N/S: Milliken Avenue
E/W: Inland Empire Boulevard/Mall Drive
Weather: Clear

File Name : 12_ONT_Mil_IEB PM
Site Code : 00322818
Start Date : 9/20/2022
Page No : 2

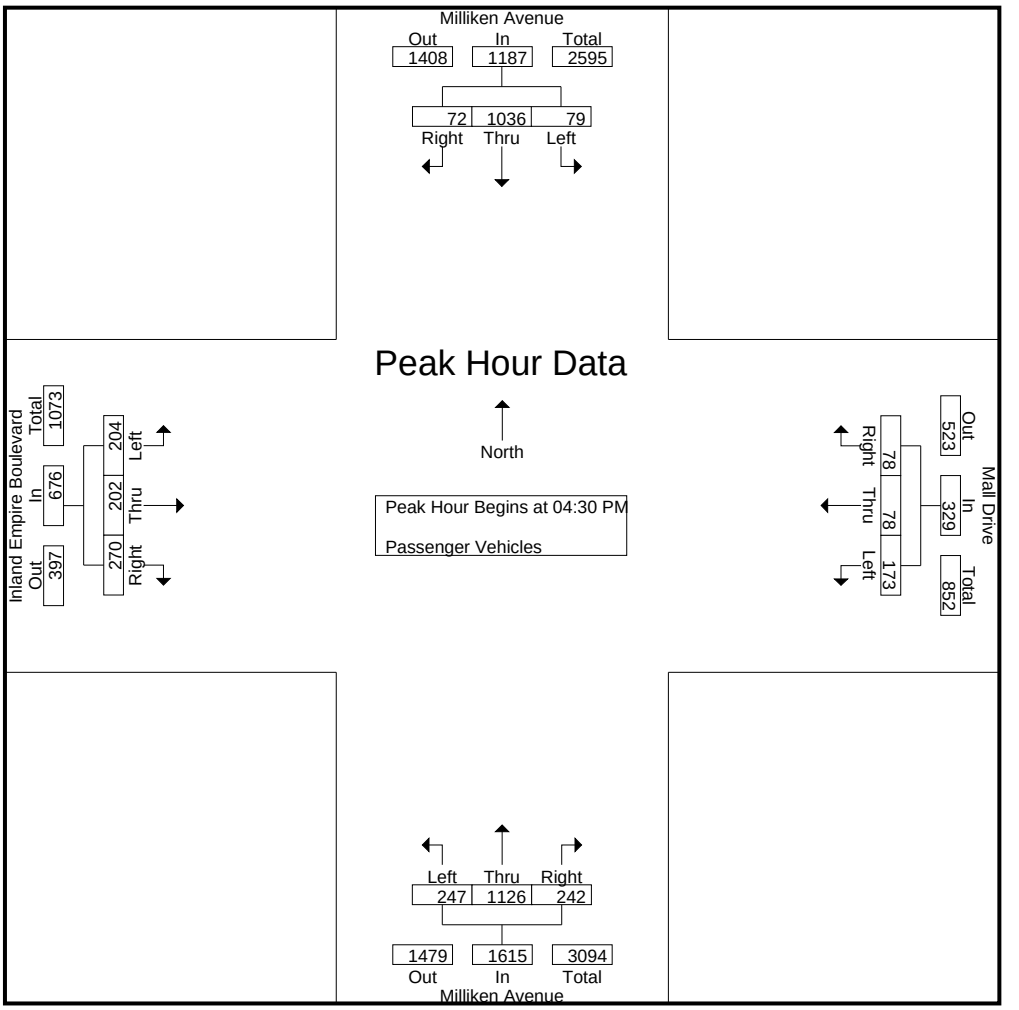

Peak Hour Analysis From 04:30 PM to 05:15 PM - Peak 1 of 1
Peak Hour for Each Approach Begins at:

	04:30 PM				04:30 PM				04:30 PM				04:30 PM			
+0 mins.	**26**	239	18	283	43	21	**24**	**88**	57	248	60	365	**53**	**58**	57	168
+15 mins.	20	248	17	285	**50**	**24**	14	88	57	281	**74**	412	48	53	63	164
+30 mins.	21	268	**21**	**310**	34	18	21	73	**69**	268	58	395	51	48	72	171
+45 mins.	12	**281**	16	309	46	15	19	80	64	**329**	50	**443**	52	43	**78**	**173**
Total Volume	79	1036	72	1187	173	78	78	329	247	1126	242	1615	204	202	270	676
% App. Total	6.7	87.3	6.1		52.6	23.7	23.7		15.3	69.7	15		30.2	29.9	39.9	
PHF	.760	.922	.857	.957	.865	.813	.813	.935	.895	.856	.818	.911	.962	.871	.865	.977

Counts Unlimited, Inc.
PO Box 1178
Corona, CA 92878
(951)268-6268

City of Ontario
N/S: Milliken Avenue
E/W: Inland Empire Boulevard/Mall Drive
Weather: Clear

File Name : 12_ONT_Mil_IEB PM
Site Code : 00322818
Start Date : 9/20/2022
Page No : 1

Groups Printed- Large 2 Axle Vehicles

	Milliken Avenue Southbound				Mall Drive Westbound				Milliken Avenue Northbound				Inland Empire Boulevard Eastbound				
Start Time	Left	Thru	Right	App. Total	Left	Thru	Right	App. Total	Left	Thru	Right	App. Total	Left	Thru	Right	App. Total	Int. Total
04:00 PM	2	3	0	5	0	0	0	0	2	4	1	7	0	1	2	3	15
04:15 PM	2	4	1	7	1	0	0	1	1	6	0	7	0	1	0	1	16
04:30 PM	2	7	0	9	0	0	0	0	1	7	1	9	0	1	1	2	20
04:45 PM	1	2	1	4	0	0	0	0	0	2	0	2	0	1	1	2	8
Total	7	16	2	25	1	0	0	1	4	19	2	25	0	4	4	8	59
05:00 PM	3	3	1	7	0	0	0	0	0	3	1	4	1	1	0	2	13
05:15 PM	1	6	1	8	0	1	0	1	1	5	0	6	0	3	0	3	18
05:30 PM	0	4	0	4	0	1	0	1	1	1	1	3	0	1	0	1	9
05:45 PM	3	5	0	8	0	2	0	2	0	3	3	6	0	1	1	2	18
Total	7	18	2	27	0	4	0	4	2	12	5	19	1	6	1	8	58
Grand Total	14	34	4	52	1	4	0	5	6	31	7	44	1	10	5	16	117
Apprch %	26.9	65.4	7.7		20	80	0		13.6	70.5	15.9		6.2	62.5	31.2		
Total %	12	29.1	3.4	44.4	0.9	3.4	0	4.3	5.1	26.5	6	37.6	0.9	8.5	4.3	13.7	

	Milliken Avenue Southbound				Mall Drive Westbound				Milliken Avenue Northbound				Inland Empire Boulevard Eastbound				
Start Time	Left	Thru	Right	App. Total	Left	Thru	Right	App. Total	Left	Thru	Right	App. Total	Left	Thru	Right	App. Total	Int. Total
Peak Hour Analysis From 04:30 PM to 05:15 PM - Peak 1 of 1																	
Peak Hour for Entire Intersection Begins at 04:30 PM																	
04:30 PM	2	**7**	0	**9**	0	0	0	0	**1**	**7**	**1**	**9**	0	1	**1**	2	**20**
04:45 PM	1	2	**1**	4	0	0	0	0	0	2	0	2	0	1	1	2	8
05:00 PM	**3**	3	1	7	0	0	0	0	0	3	1	4	**1**	1	0	2	13
05:15 PM	1	6	1	8	0	**1**	0	**1**	1	5	0	6	0	**3**	0	**3**	18
Total Volume	7	18	3	28	0	1	0	1	2	17	2	21	1	6	2	9	59
% App. Total	25	64.3	10.7		0	100	0		9.5	81	9.5		11.1	66.7	22.2		
PHF	.583	.643	.750	.778	.000	.250	.000	.250	.500	.607	.500	.583	.250	.500	.500	.750	.738

Counts Unlimited, Inc.
PO Box 1178
Corona, CA 92878
(951)268-6268

City of Ontario
N/S: Milliken Avenue
E/W: Inland Empire Boulevard/Mall Drive
Weather: Clear

File Name : 12_ONT_Mil_IEB PM
Site Code : 00322818
Start Date : 9/20/2022
Page No : 2

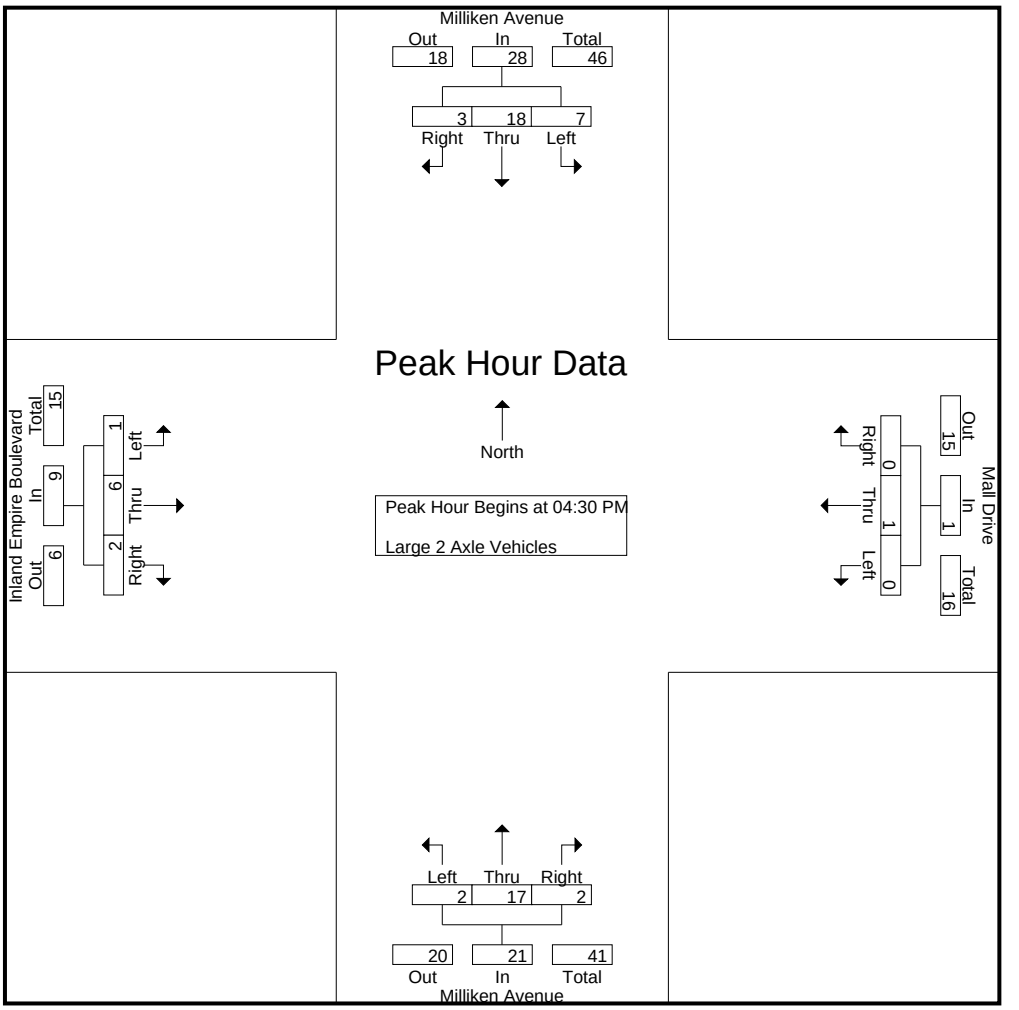

Peak Hour Analysis From 04:30 PM to 05:15 PM - Peak 1 of 1
Peak Hour for Each Approach Begins at:

	04:30 PM				04:30 PM				04:30 PM				04:30 PM			
+0 mins.	2	**7**	0	**9**	0	0	0	0	**1**	**7**	**1**	**9**	0	1	**1**	2
+15 mins.	1	2	**1**	4	0	0	0	0	0	2	0	2	0	1	1	2
+30 mins.	**3**	3	1	7	0	0	0	0	0	3	1	4	**1**	1	0	2
+45 mins.	1	6	1	8	0	**1**	0	**1**	1	5	0	6	0	**3**	0	**3**
Total Volume	7	18	3	28	0	1	0	1	2	17	2	21	1	6	2	9
% App. Total	25	64.3	10.7		0	100	0		9.5	81	9.5		11.1	66.7	22.2	
PHF	.583	.643	.750	.778	.000	.250	.000	.250	.500	.607	.500	.583	.250	.500	.500	.750

Counts Unlimited, Inc.
PO Box 1178
Corona, CA 92878
(951)268-6268

City of Ontario
N/S: Milliken Avenue
E/W: Inland Empire Boulevard/Mall Drive
Weather: Clear

File Name : 12_ONT_Mil_IEB PM
Site Code : 00322818
Start Date : 9/20/2022
Page No : 1

Groups Printed- 3 Axle Vehicles

	Milliken Avenue Southbound				Mall Drive Westbound				Milliken Avenue Northbound				Inland Empire Boulevard Eastbound				
Start Time	Left	Thru	Right	App. Total	Left	Thru	Right	App. Total	Left	Thru	Right	App. Total	Left	Thru	Right	App. Total	Int. Total
04:00 PM	0	2	0	2	0	0	0	0	0	3	1	4	0	0	0	0	6
04:15 PM	0	1	0	1	0	0	0	0	0	3	0	3	0	0	0	0	4
04:30 PM	0	0	0	0	0	0	0	0	0	1	2	3	1	0	0	1	4
04:45 PM	0	1	0	1	1	0	0	1	2	5	0	7	0	0	0	0	9
Total	0	4	0	4	1	0	0	1	2	12	3	17	1	0	0	1	23
05:00 PM	0	3	0	3	0	0	0	0	0	1	0	1	0	0	0	0	4
05:15 PM	0	0	0	0	0	0	0	0	2	3	0	5	0	0	1	1	6
05:30 PM	0	1	0	1	0	0	0	0	0	1	0	1	0	0	0	0	2
05:45 PM	0	1	0	1	1	0	0	1	0	2	0	2	0	1	0	1	5
Total	0	5	0	5	1	0	0	1	2	7	0	9	0	1	1	2	17
Grand Total	0	9	0	9	2	0	0	2	4	19	3	26	1	1	1	3	40
Apprch %	0	100	0		100	0	0		15.4	73.1	11.5		33.3	33.3	33.3		
Total %	0	22.5	0	22.5	5	0	0	5	10	47.5	7.5	65	2.5	2.5	2.5	7.5	

	Milliken Avenue Southbound				Mall Drive Westbound				Milliken Avenue Northbound				Inland Empire Boulevard Eastbound				
Start Time	Left	Thru	Right	App. Total	Left	Thru	Right	App. Total	Left	Thru	Right	App. Total	Left	Thru	Right	App. Total	Int. Total
Peak Hour Analysis From 04:30 PM to 05:15 PM - Peak 1 of 1																	
Peak Hour for Entire Intersection Begins at 04:30 PM																	
04:30 PM	0	0	0	0	0	0	0	0	0	1	**2**	3	**1**	0	0	**1**	4
04:45 PM	0	1	0	1	**1**	0	0	**1**	**2**	**5**	0	**7**	0	0	0	0	**9**
05:00 PM	0	**3**	0	**3**	0	0	0	0	0	1	0	1	0	0	0	0	4
05:15 PM	0	0	0	0	0	0	0	0	2	3	0	5	0	0	**1**	1	6
Total Volume	0	4	0	4	1	0	0	1	4	10	2	16	1	0	1	2	23
% App. Total	0	100	0		100	0	0		25	62.5	12.5		50	0	50		
PHF	.000	.333	.000	.333	.250	.000	.000	.250	.500	.500	.250	.571	.250	.000	.250	.500	.639

Counts Unlimited, Inc.
PO Box 1178
Corona, CA 92878
(951)268-6268

City of Ontario
N/S: Milliken Avenue
E/W: Inland Empire Boulevard/Mall Drive
Weather: Clear

File Name : 12_ONT_Mil_IEB PM
Site Code : 00322818
Start Date : 9/20/2022
Page No : 2

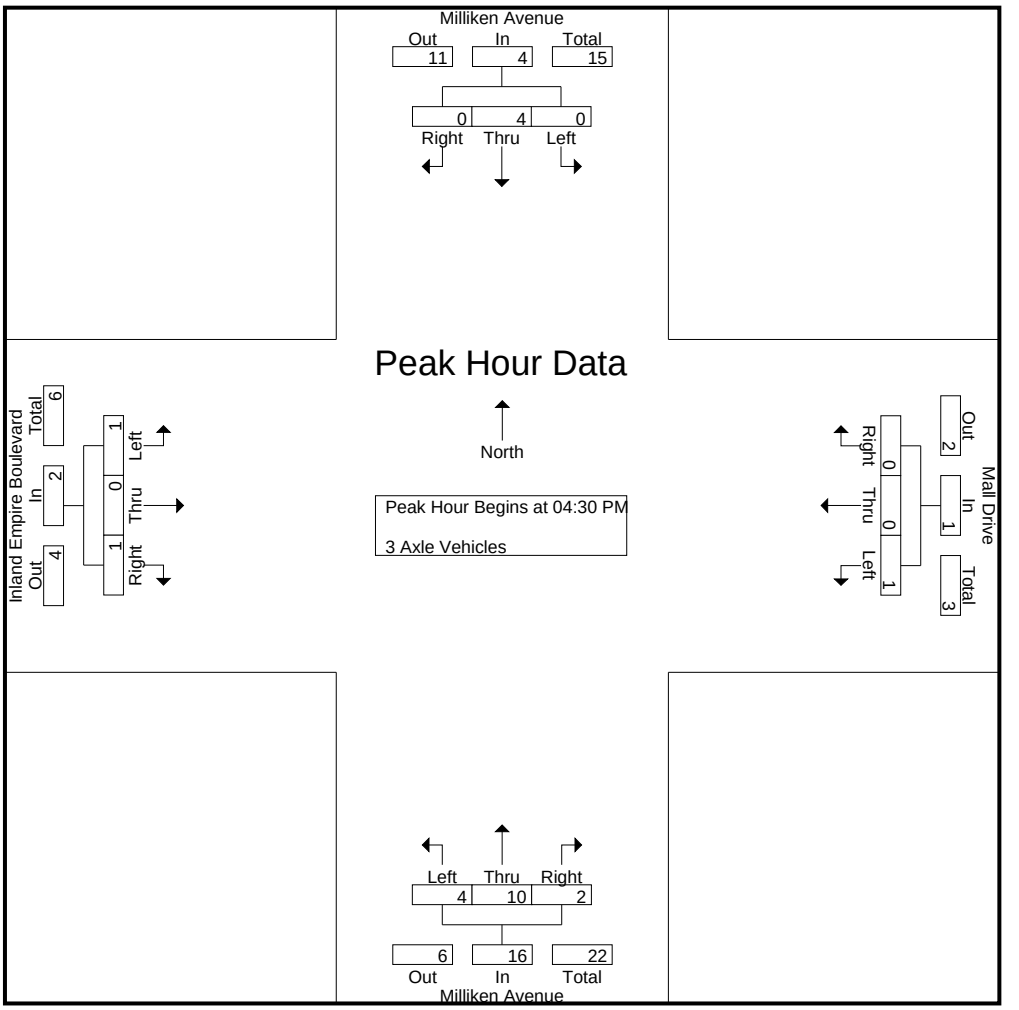

Peak Hour Analysis From 04:30 PM to 05:15 PM - Peak 1 of 1
Peak Hour for Each Approach Begins at:

	04:30 PM				04:30 PM				04:30 PM				04:30 PM			
+0 mins.	0	0	0	0	0	0	0	0	0	1	**2**	3	**1**	0	0	**1**
+15 mins.	0	1	0	1	**1**	0	0	**1**	**2**	**5**	0	**7**	0	0	0	0
+30 mins.	0	**3**	0	**3**	0	0	0	0	0	1	0	1	0	0	0	0
+45 mins.	0	0	0	0	0	0	0	0	2	3	0	5	0	0	**1**	1
Total Volume	0	4	0	4	1	0	0	1	4	10	2	16	1	0	1	2
% App. Total	0	100	0		100	0	0		25	62.5	12.5		50	0	50	
PHF	.000	.333	.000	.333	.250	.000	.000	.250	.500	.500	.250	.571	.250	.000	.250	.500

Counts Unlimited, Inc.
PO Box 1178
Corona, CA 92878
(951)268-6268

City of Ontario
N/S: Milliken Avenue
E/W: Inland Empire Boulevard/Mall Drive
Weather: Clear

File Name : 12_ONT_Mil_IEB PM
Site Code : 00322818
Start Date : 9/20/2022
Page No : 1

Groups Printed- 4+ Axle Trucks

	Milliken Avenue Southbound				Mall Drive Westbound				Milliken Avenue Northbound				Inland Empire Boulevard Eastbound				
Start Time	Left	Thru	Right	App. Total	Left	Thru	Right	App. Total	Left	Thru	Right	App. Total	Left	Thru	Right	App. Total	Int. Total
04:00 PM	0	11	0	11	0	0	0	0	0	12	0	12	0	0	1	1	24
04:15 PM	0	11	0	11	0	0	0	0	0	11	0	11	0	0	0	0	22
04:30 PM	0	4	0	4	0	0	0	0	0	8	0	8	0	0	0	0	12
04:45 PM	0	11	1	12	0	0	0	0	1	4	0	5	0	0	0	0	17
Total	0	37	1	38	0	0	0	0	1	35	0	36	0	0	1	1	75
05:00 PM	0	7	0	7	0	0	0	0	0	6	0	6	0	0	0	0	13
05:15 PM	0	12	0	12	0	0	0	0	0	7	0	7	0	0	0	0	19
05:30 PM	0	3	0	3	0	0	0	0	0	8	0	8	0	0	0	0	11
05:45 PM	0	8	1	9	0	0	0	0	1	8	0	9	0	0	0	0	18
Total	0	30	1	31	0	0	0	0	1	29	0	30	0	0	0	0	61
Grand Total	0	67	2	69	0	0	0	0	2	64	0	66	0	0	1	1	136
Apprch %	0	97.1	2.9		0	0	0		3	97	0		0	0	100		
Total %	0	49.3	1.5	50.7	0	0	0	0	1.5	47.1	0	48.5	0	0	0.7	0.7	

	Milliken Avenue Southbound				Mall Drive Westbound				Milliken Avenue Northbound				Inland Empire Boulevard Eastbound				
Start Time	Left	Thru	Right	App. Total	Left	Thru	Right	App. Total	Left	Thru	Right	App. Total	Left	Thru	Right	App. Total	Int. Total
Peak Hour Analysis From 04:30 PM to 05:15 PM - Peak 1 of 1																	
Peak Hour for Entire Intersection Begins at 04:30 PM																	
04:30 PM	0	4	0	4	0	0	0	0	0	**8**	0	**8**	0	0	0	0	12
04:45 PM	0	11	**1**	**12**	0	0	0	0	**1**	4	0	5	0	0	0	0	17
05:00 PM	0	7	0	7	0	0	0	0	0	6	0	6	0	0	0	0	13
05:15 PM	0	**12**	0	12	0	0	0	0	0	7	0	7	0	0	0	0	**19**
Total Volume	0	34	1	35	0	0	0	0	1	25	0	26	0	0	0	0	61
% App. Total	0	97.1	2.9		0	0	0		3.8	96.2	0		0	0	0		
PHF	.000	.708	.250	.729	.000	.000	.000	.000	.250	.781	.000	.813	.000	.000	.000	.000	.803

Counts Unlimited, Inc.
PO Box 1178
Corona, CA 92878
(951)268-6268

City of Ontario
N/S: Milliken Avenue
E/W: Inland Empire Boulevard/Mall Drive
Weather: Clear

File Name : 12_ONT_Mil_IEB PM
Site Code : 00322818
Start Date : 9/20/2022
Page No : 2

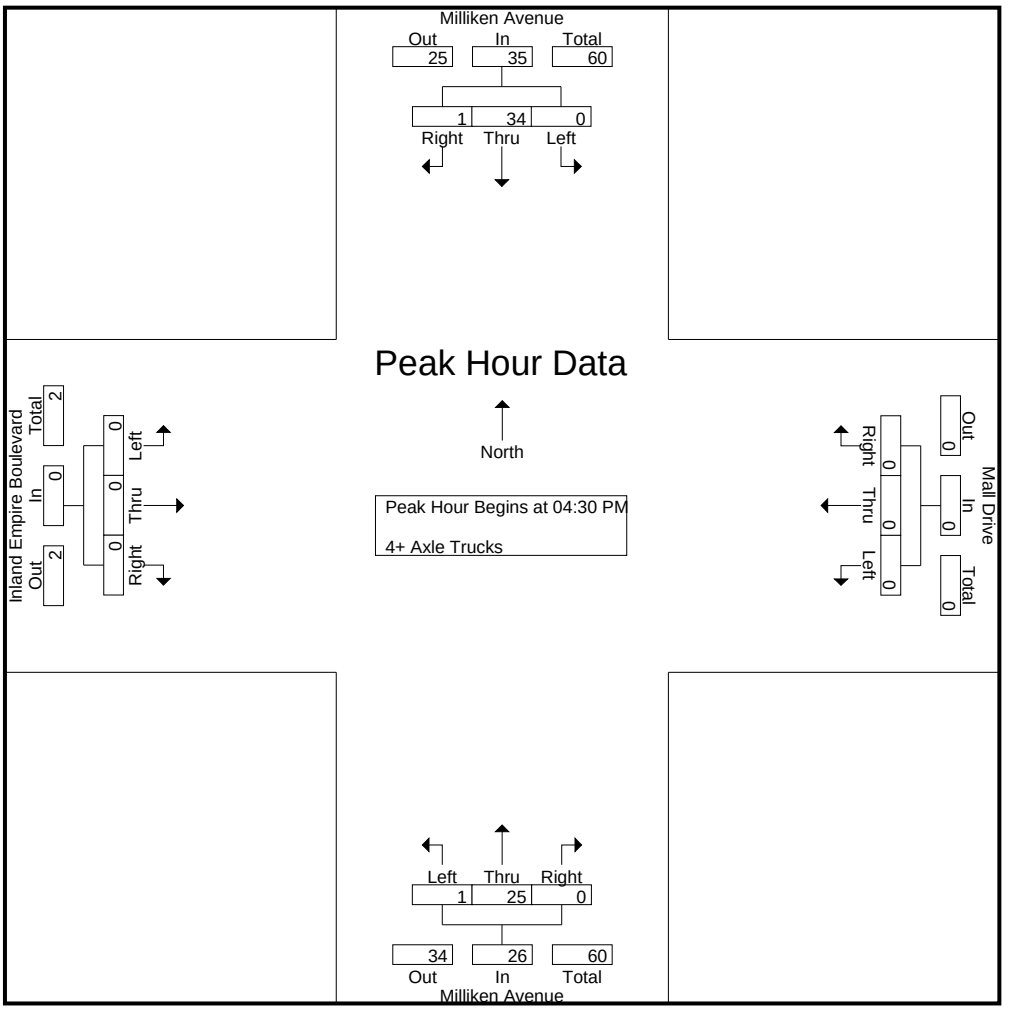

Peak Hour Analysis From 04:30 PM to 05:15 PM - Peak 1 of 1
Peak Hour for Each Approach Begins at:

	04:30 PM				04:30 PM				04:30 PM				04:30 PM			
+0 mins.	0	4	0	4	0	0	0	0	0	**8**	0	**8**	0	0	0	0
+15 mins.	0	11	**1**	**12**	0	0	0	0	**1**	4	0	5	0	0	0	0
+30 mins.	0	7	0	7	0	0	0	0	0	6	0	6	0	0	0	0
+45 mins.	0	**12**	0	12	0	0	0	0	0	7	0	7	0	0	0	0
Total Volume	0	34	1	35	0	0	0	0	1	25	0	26	0	0	0	0
% App. Total	0	97.1	2.9		0	0	0		3.8	96.2	0		0	0	0	
PHF	.000	.708	.250	.729	.000	.000	.000	.000	.250	.781	.000	.813	.000	.000	.000	.000

Location: Ontario
N/S: Milliken Avenue
E/W: Inland Empire Blvd/Mall Dr

Date: 9/20/2022
Day: Tuesday

PEDESTRIANS

	North Leg Milliken Avenue	East Leg Mall Drive	South Leg Milliken Avenue	West Leg Inland Empire Boulevard	
	Pedestrians	Pedestrians	Pedestrians	Pedestrians	
7:00 AM	1	5	0	0	6
7:15 AM	0	3	0	0	3
7:30 AM	0	0	1	0	1
7:45 AM	0	0	0	0	0
8:00 AM	0	0	0	0	0
8:15 AM	0	0	0	0	0
8:30 AM	0	2	0	0	2
8:45 AM	0	0	0	0	0
TOTAL VOLUMES:	1	10	1	0	12

	North Leg Milliken Avenue	East Leg Mall Drive	South Leg Milliken Avenue	West Leg Inland Empire Boulevard	
	Pedestrians	Pedestrians	Pedestrians	Pedestrians	
4:00 PM	0	5	0	0	5
4:15 PM	2	0	0	0	2
4:30 PM	0	0	0	0	0
4:45 PM	1	1	0	0	2
5:00 PM	1	1	3	0	5
5:15 PM	3	1	0	2	6
5:30 PM	0	0	1	0	1
5:45 PM	0	0	0	0	0
TOTAL VOLUMES:	7	8	4	2	21

Counts Unlimited, Inc.
PO Box 1178
Corona, CA 92878
951-268-6268

Location: Ontario
N/S: Milliken Avenue
E/W: Inland Empire Blvd/Mall Dr

Date: 9/20/2022
Day: Tuesday

BICYCLES

	Southbound Milliken Avenue			Westbound Mall Drive			Northbound Milliken Avenue			Eastbound Inland Empire Boulevard			
	Left	Thru	Right	Left	Thru	Right	Left	Thru	Right	Left	Thru	Right	
7:00 AM	0	0	0	0	0	0	0	0	0	0	0	0	0
7:15 AM	0	0	0	0	0	0	0	0	0	0	0	0	0
7:30 AM	0	0	0	0	0	0	0	0	0	0	0	0	0
7:45 AM	0	0	0	0	0	0	0	0	0	0	0	0	0
8:00 AM	0	0	0	0	0	0	0	0	0	0	0	1	1
8:15 AM	0	1	0	0	0	0	0	0	0	0	1	0	2
8:30 AM	0	0	0	0	0	0	0	1	0	0	0	1	2
8:45 AM	0	1	0	0	0	0	0	0	0	0	0	0	1
TOTAL VOLUMES:	0	2	0	0	0	0	0	1	0	0	1	2	6

	Southbound Milliken Avenue			Westbound Mall Drive			Northbound Milliken Avenue			Eastbound Inland Empire Boulevard			
	Left	Thru	Right	Left	Thru	Right	Left	Thru	Right	Left	Thru	Right	
4:00 PM	0	0	0	0	0	0	0	1	0	0	0	0	1
4:15 PM	0	0	0	0	0	0	0	1	0	0	0	0	1
4:30 PM	0	0	0	0	0	0	0	0	0	0	1	0	1
4:45 PM	0	0	0	0	0	0	0	0	0	0	0	1	1
5:00 PM	0	0	0	0	0	0	0	0	0	0	0	0	0
5:15 PM	0	0	0	0	1	0	0	0	0	0	0	0	1
5:30 PM	0	0	0	0	0	0	0	0	0	0	0	0	0
5:45 PM	0	0	0	0	0	0	0	2	0	0	0	0	2
TOTAL VOLUMES:	0	0	0	0	1	0	0	4	0	0	1	1	7

Counts Unlimited, Inc.
PO Box 1178
Corona, CA 92878
951-268-6268

Counts Unlimited, Inc.
PO Box 1178
Corona, CA 92878
(951)268-6268

City of Ontario
N/S: Milliken Avenue
E/W: I-10 WB Ramps/Ontario Mills Pkwy
Weather: Clear

File Name : 13_ONT_Mil_10W AM
Site Code : 00322818
Start Date : 9/20/2022
Page No : 1

Groups Printed- Passenger Vehicles - Large 2 Axle Vehicles - 3 Axle Vehicles - 4+ Axle Trucks

	Milliken Avenue Southbound				Ontario Mills Parkway Westbound				Milliken Avenue Northbound				I-10 Westbound Ramps Eastbound				
Start Time	Left	Thru	Right	App. Total	Left	Thru	Right	App. Total	Left	Thru	Right	App. Total	Left	Thru	Right	App. Total	Int. Total
07:00 AM	24	91	46	161	29	17	2	48	48	97	42	187	76	20	45	141	537
07:15 AM	15	118	49	182	20	28	6	54	38	128	51	217	72	28	21	121	574
07:30 AM	20	144	52	216	21	35	7	63	30	154	60	244	82	27	29	138	661
07:45 AM	18	130	41	189	30	30	12	72	33	190	73	296	88	24	65	177	734
Total	77	483	188	748	100	110	27	237	149	569	226	944	318	99	160	577	2506
08:00 AM	23	134	48	205	32	42	6	80	48	177	61	286	73	9	48	130	701
08:15 AM	23	132	51	206	25	35	6	66	43	148	65	256	97	19	44	160	688
08:30 AM	31	117	46	194	24	33	5	62	40	154	80	274	97	15	61	173	703
08:45 AM	24	102	48	174	34	36	5	75	45	160	83	288	90	30	75	195	732
Total	101	485	193	779	115	146	22	283	176	639	289	1104	357	73	228	658	2824
Grand Total	178	968	381	1527	215	256	49	520	325	1208	515	2048	675	172	388	1235	5330
Apprch %	11.7	63.4	25		41.3	49.2	9.4		15.9	59	25.1		54.7	13.9	31.4		
Total %	3.3	18.2	7.1	28.6	4	4.8	0.9	9.8	6.1	22.7	9.7	38.4	12.7	3.2	7.3	23.2	
Passenger Vehicles	170	851	338	1359	185	220	44	449	103	1059	477	1639	657	163	292	1112	4559
% Passenger Vehicles	95.5	87.9	88.7	89	86	85.9	89.8	86.3	31.7	87.7	92.6	80	97.3	94.8	75.3	90	85.5
Large 2 Axle Vehicles	3	35	15	53	9	18	0	27	12	45	10	67	11	5	10	26	173
% Large 2 Axle Vehicles	1.7	3.6	3.9	3.5	4.2	7	0	5.2	3.7	3.7	1.9	3.3	1.6	2.9	2.6	2.1	3.2
3 Axle Vehicles	2	24	0	26	5	3	2	10	39	16	11	66	2	2	13	17	119
% 3 Axle Vehicles	1.1	2.5	0	1.7	2.3	1.2	4.1	1.9	12	1.3	2.1	3.2	0.3	1.2	3.4	1.4	2.2
4+ Axle Trucks	3	58	28	89	16	15	3	34	171	88	17	276	5	2	73	80	479
% 4+ Axle Trucks	1.7	6	7.3	5.8	7.4	5.9	6.1	6.5	52.6	7.3	3.3	13.5	0.7	1.2	18.8	6.5	9

	Milliken Avenue Southbound				Ontario Mills Parkway Westbound				Milliken Avenue Northbound				I-10 Westbound Ramps Eastbound				
Start Time	Left	Thru	Right	App. Total	Left	Thru	Right	App. Total	Left	Thru	Right	App. Total	Left	Thru	Right	App. Total	Int. Total
Peak Hour Analysis From 07:00 AM to 08:45 AM - Peak 1 of 1																	
Peak Hour for Entire Intersection Begins at 07:45 AM																	
07:45 AM	18	130	41	189	30	30	**12**	72	33	**190**	73	**296**	88	**24**	**65**	**177**	**734**
08:00 AM	23	**134**	48	205	**32**	**42**	6	**80**	**48**	177	61	286	73	9	48	130	701
08:15 AM	23	132	**51**	**206**	25	35	6	66	43	148	65	256	**97**	19	44	160	688
08:30 AM	**31**	117	46	194	24	33	5	62	40	154	**80**	274	97	15	61	173	703
Total Volume	95	513	186	794	111	140	29	280	164	669	279	1112	355	67	218	640	2826
% App. Total	12	64.6	23.4		39.6	50	10.4		14.7	60.2	25.1		55.5	10.5	34.1		
PHF	.766	.957	.912	.964	.867	.833	.604	.875	.854	.880	.872	.939	.915	.698	.838	.904	.963

Counts Unlimited, Inc.
PO Box 1178
Corona, CA 92878
(951)268-6268

City of Ontario
N/S: Milliken Avenue
E/W: I-10 WB Ramps/Ontario Mills Pkwy
Weather: Clear

File Name : 13_ONT_Mil_10W AM
Site Code : 00322818
Start Date : 9/20/2022
Page No : 2

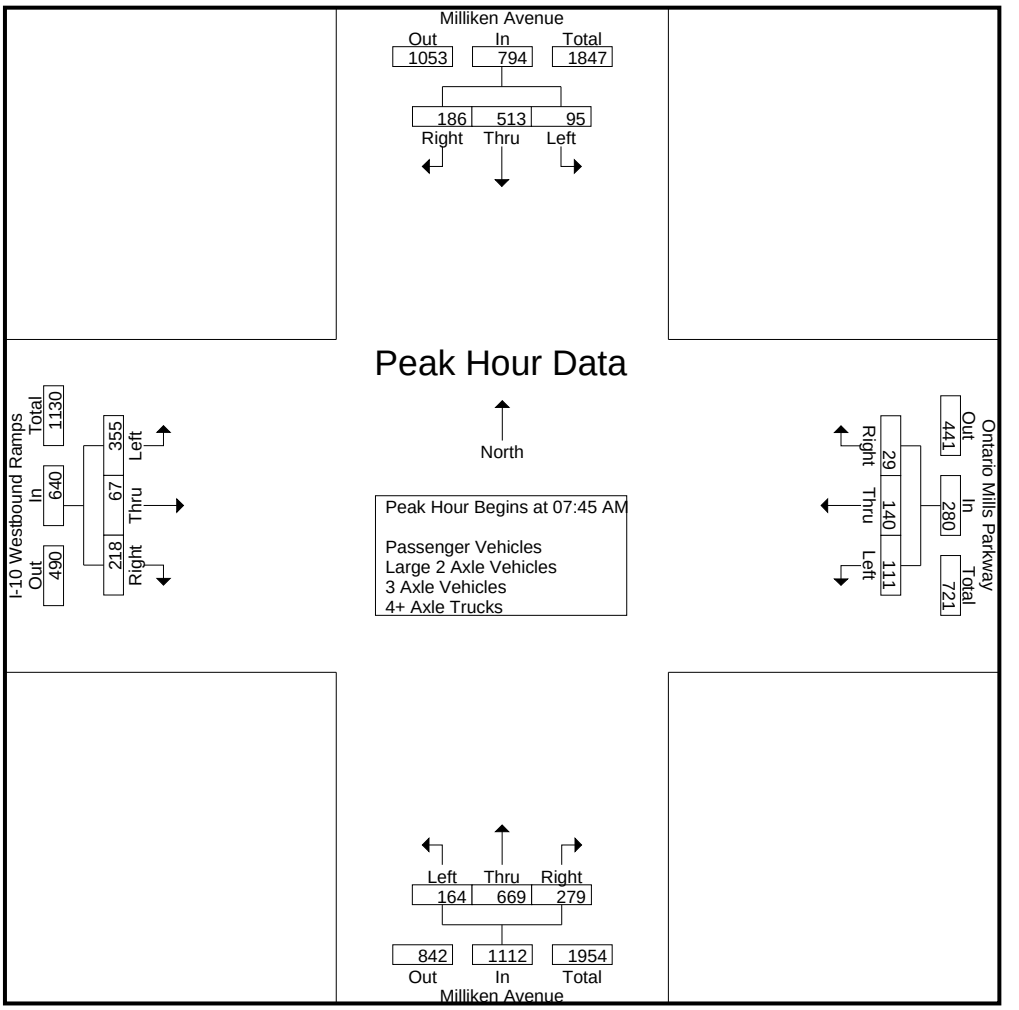

Peak Hour Analysis From 07:00 AM to 08:45 AM - Peak 1 of 1
Peak Hour for Each Approach Begins at:

	07:30 AM				08:00 AM				07:45 AM				08:00 AM			
+0 mins.	20	**144**	**52**	**216**	32	**42**	**6**	**80**	33	**190**	73	**296**	73	9	48	130
+15 mins.	18	130	41	189	25	35	6	66	**48**	177	61	286	**97**	19	44	160
+30 mins.	**23**	134	48	205	24	33	5	62	43	148	65	256	97	15	61	173
+45 mins.	23	132	51	206	**34**	36	5	75	40	154	**80**	274	90	**30**	**75**	**195**
Total Volume	84	540	192	816	115	146	22	283	164	669	279	1112	357	73	228	658
% App. Total	10.3	66.2	23.5		40.6	51.6	7.8		14.7	60.2	25.1		54.3	11.1	34.7	
PHF	.913	.938	.923	.944	.846	.869	.917	.884	.854	.880	.872	.939	.920	.608	.760	.844

Counts Unlimited, Inc.
PO Box 1178
Corona, CA 92878
(951)268-6268

City of Ontario
N/S: Milliken Avenue
E/W: I-10 WB Ramps/Ontario Mills Pkwy
Weather: Clear

File Name : 13_ONT_Mil_10W AM
Site Code : 00322818
Start Date : 9/20/2022
Page No : 1

Groups Printed- Passenger Vehicles

	Milliken Avenue Southbound				Ontario Mills Parkway Westbound				Milliken Avenue Northbound				I-10 Westbound Ramps Eastbound				
Start Time	Left	Thru	Right	App. Total	Left	Thru	Right	App. Total	Left	Thru	Right	App. Total	Left	Thru	Right	App. Total	Int. Total
07:00 AM	20	81	39	140	22	17	2	41	11	79	38	128	74	20	28	122	431
07:15 AM	15	106	42	163	18	25	5	48	17	116	48	181	68	28	16	112	504
07:30 AM	20	128	49	197	19	27	5	51	8	138	54	200	81	27	24	132	580
07:45 AM	18	110	36	164	27	22	12	61	13	168	70	251	86	24	57	167	643
Total	73	425	166	664	86	91	24	201	49	501	210	760	309	99	125	533	2158
08:00 AM	23	123	44	190	24	39	6	69	22	157	55	234	73	8	37	118	611
08:15 AM	22	120	45	187	25	28	6	59	12	130	57	199	97	18	37	152	597
08:30 AM	28	96	39	163	22	29	4	55	8	131	75	214	90	12	41	143	575
08:45 AM	24	87	44	155	28	33	4	65	12	140	80	232	88	26	52	166	618
Total	97	426	172	695	99	129	20	248	54	558	267	879	348	64	167	579	2401
Grand Total	170	851	338	1359	185	220	44	449	103	1059	477	1639	657	163	292	1112	4559
Apprch %	12.5	62.6	24.9		41.2	49	9.8		6.3	64.6	29.1		59.1	14.7	26.3		
Total %	3.7	18.7	7.4	29.8	4.1	4.8	1	9.8	2.3	23.2	10.5	36	14.4	3.6	6.4	24.4	

	Milliken Avenue Southbound				Ontario Mills Parkway Westbound				Milliken Avenue Northbound				I-10 Westbound Ramps Eastbound				
Start Time	Left	Thru	Right	App. Total	Left	Thru	Right	App. Total	Left	Thru	Right	App. Total	Left	Thru	Right	App. Total	Int. Total
Peak Hour Analysis From 07:45 AM to 08:30 AM - Peak 1 of 1																	
Peak Hour for Entire Intersection Begins at 07:45 AM																	
07:45 AM	18	110	36	164	**27**	22	**12**	61	13	**168**	70	**251**	86	**24**	**57**	**167**	**643**
08:00 AM	23	**123**	44	**190**	24	**39**	6	**69**	**22**	157	55	234	73	8	37	118	611
08:15 AM	22	120	**45**	187	25	28	6	59	12	130	57	199	**97**	18	37	152	597
08:30 AM	**28**	96	39	163	22	29	4	55	8	131	**75**	214	90	12	41	143	575
Total Volume	91	449	164	704	98	118	28	244	55	586	257	898	346	62	172	580	2426
% App. Total	12.9	63.8	23.3		40.2	48.4	11.5		6.1	65.3	28.6		59.7	10.7	29.7		
PHF	.813	.913	.911	.926	.907	.756	.583	.884	.625	.872	.857	.894	.892	.646	.754	.868	.943

Counts Unlimited, Inc.
PO Box 1178
Corona, CA 92878
(951)268-6268

City of Ontario
N/S: Milliken Avenue
E/W: I-10 WB Ramps/Ontario Mills Pkwy
Weather: Clear

File Name : 13_ONT_Mil_10W AM
Site Code : 00322818
Start Date : 9/20/2022
Page No : 2

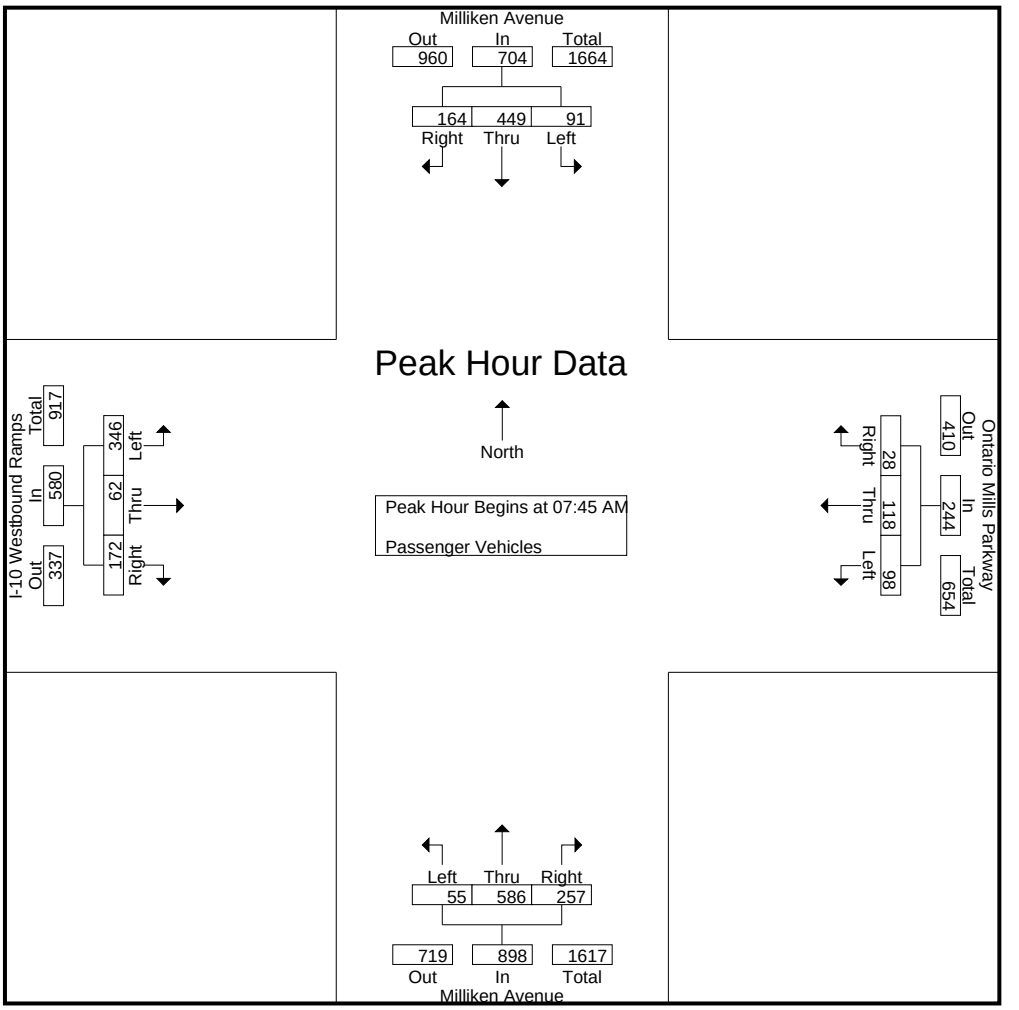

Peak Hour Analysis From 07:45 AM to 08:30 AM - Peak 1 of 1
Peak Hour for Each Approach Begins at:

	07:45 AM				07:45 AM				07:45 AM				07:45 AM			
+0 mins.	18	110	36	164	**27**	22	**12**	61	13	**168**	70	**251**	86	**24**	**57**	**167**
+15 mins.	23	**123**	44	**190**	24	**39**	6	**69**	**22**	157	55	234	73	8	37	118
+30 mins.	22	120	**45**	187	25	28	6	59	12	130	57	199	**97**	18	37	152
+45 mins.	**28**	96	39	163	22	29	4	55	8	131	**75**	214	90	12	41	143
Total Volume	91	449	164	704	98	118	28	244	55	586	257	898	346	62	172	580
% App. Total	12.9	63.8	23.3		40.2	48.4	11.5		6.1	65.3	28.6		59.7	10.7	29.7	
PHF	.813	.913	.911	.926	.907	.756	.583	.884	.625	.872	.857	.894	.892	.646	.754	.868

Counts Unlimited, Inc.
PO Box 1178
Corona, CA 92878
(951)268-6268

City of Ontario
N/S: Milliken Avenue
E/W: I-10 WB Ramps/Ontario Mills Pkwy
Weather: Clear

File Name : 13_ONT_Mil_10W AM
Site Code : 00322818
Start Date : 9/20/2022
Page No : 1

Groups Printed- Large 2 Axle Vehicles

	Milliken Avenue Southbound				Ontario Mills Parkway Westbound				Milliken Avenue Northbound				I-10 Westbound Ramps Eastbound				
Start Time	Left	Thru	Right	App. Total	Left	Thru	Right	App. Total	Left	Thru	Right	App. Total	Left	Thru	Right	App. Total	Int. Total
07:00 AM	3	3	2	8	2	0	0	2	1	6	1	8	2	0	0	2	20
07:15 AM	0	2	3	5	0	2	0	2	0	4	1	5	2	0	0	2	14
07:30 AM	0	6	1	7	1	3	0	4	2	3	2	7	1	0	1	2	20
07:45 AM	0	7	2	9	1	4	0	5	1	7	1	9	1	0	2	3	26
Total	3	18	8	29	4	9	0	13	4	20	5	29	6	0	3	9	80
08:00 AM	0	4	0	4	3	2	0	5	0	5	2	7	0	1	2	3	19
08:15 AM	0	4	3	7	0	4	0	4	2	5	2	9	0	1	0	1	21
08:30 AM	0	5	3	8	0	2	0	2	1	7	0	8	3	1	0	4	22
08:45 AM	0	4	1	5	2	1	0	3	5	8	1	14	2	2	5	9	31
Total	0	17	7	24	5	9	0	14	8	25	5	38	5	5	7	17	93
Grand Total	3	35	15	53	9	18	0	27	12	45	10	67	11	5	10	26	173
Apprch %	5.7	66	28.3		33.3	66.7	0		17.9	67.2	14.9		42.3	19.2	38.5		
Total %	1.7	20.2	8.7	30.6	5.2	10.4	0	15.6	6.9	26	5.8	38.7	6.4	2.9	5.8	15	

	Milliken Avenue Southbound				Ontario Mills Parkway Westbound				Milliken Avenue Northbound				I-10 Westbound Ramps Eastbound				
Start Time	Left	Thru	Right	App. Total	Left	Thru	Right	App. Total	Left	Thru	Right	App. Total	Left	Thru	Right	App. Total	Int. Total
Peak Hour Analysis From 07:45 AM to 08:30 AM - Peak 1 of 1																	
Peak Hour for Entire Intersection Begins at 07:45 AM																	
07:45 AM	0	**7**	2	**9**	1	**4**	0	**5**	1	**7**	1	**9**	1	0	**2**	3	**26**
08:00 AM	0	4	0	4	**3**	2	0	5	0	5	**2**	7	0	**1**	2	3	19
08:15 AM	0	4	**3**	7	0	4	0	4	**2**	5	2	9	0	1	0	1	21
08:30 AM	0	5	3	8	0	2	0	2	1	7	0	8	**3**	1	0	**4**	22
Total Volume	0	20	8	28	4	12	0	16	4	24	5	33	4	3	4	11	88
% App. Total	0	71.4	28.6		25	75	0		12.1	72.7	15.2		36.4	27.3	36.4		
PHF	.000	.714	.667	.778	.333	.750	.000	.800	.500	.857	.625	.917	.333	.750	.500	.688	.846

Counts Unlimited, Inc.
PO Box 1178
Corona, CA 92878
(951)268-6268

City of Ontario
N/S: Milliken Avenue
E/W: I-10 WB Ramps/Ontario Mills Pkwy
Weather: Clear

File Name : 13_ONT_Mil_10W AM
Site Code : 00322818
Start Date : 9/20/2022
Page No : 2

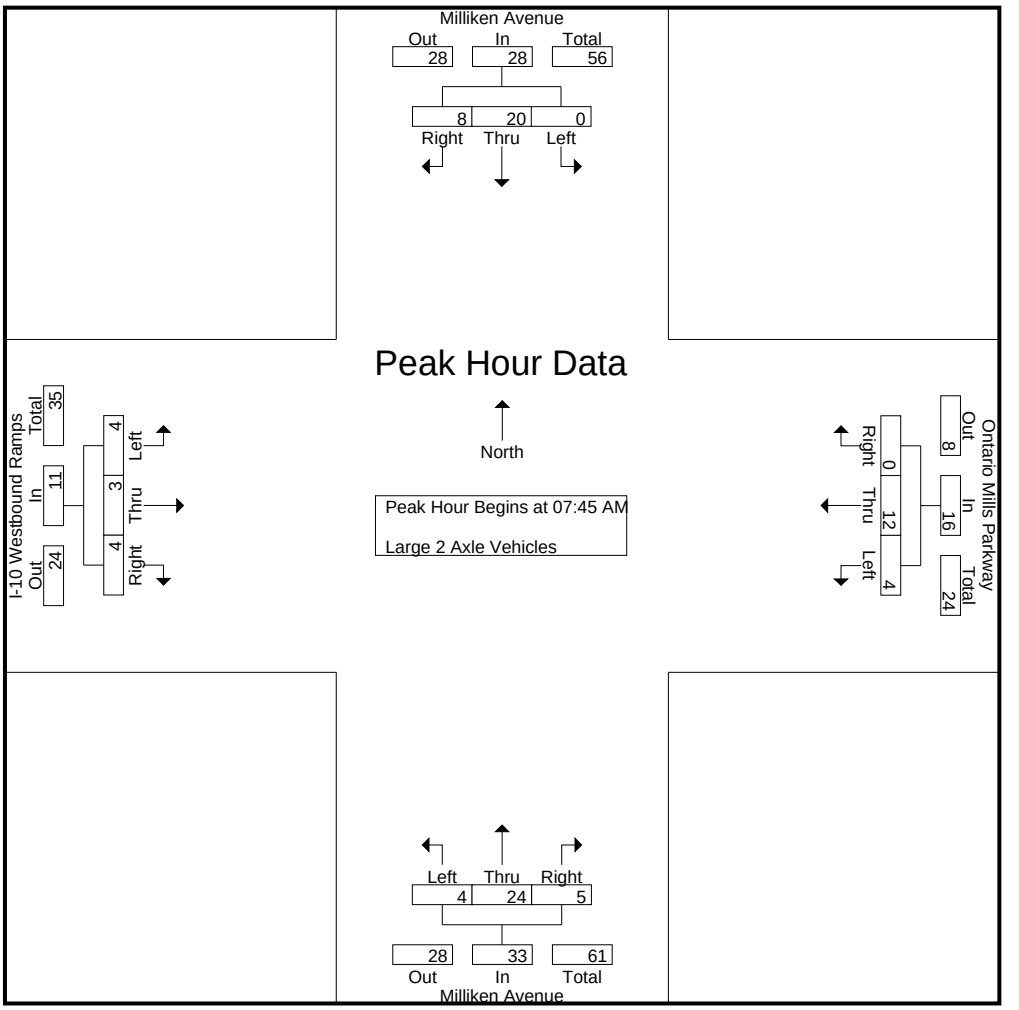

Peak Hour Analysis From 07:45 AM to 08:30 AM - Peak 1 of 1
Peak Hour for Each Approach Begins at:

	07:45 AM				07:45 AM				07:45 AM				07:45 AM			
+0 mins.	0	**7**	2	**9**	1	**4**	0	**5**	1	**7**	1	**9**	1	0	**2**	3
+15 mins.	0	4	0	4	**3**	2	0	5	0	5	**2**	7	0	**1**	2	3
+30 mins.	0	4	**3**	7	0	4	0	4	**2**	5	2	9	0	1	0	1
+45 mins.	0	5	3	8	0	2	0	2	1	7	0	8	**3**	1	0	**4**
Total Volume	0	20	8	28	4	12	0	16	4	24	5	33	4	3	4	11
% App. Total	0	71.4	28.6		25	75	0		12.1	72.7	15.2		36.4	27.3	36.4	
PHF	.000	.714	.667	.778	.333	.750	.000	.800	.500	.857	.625	.917	.333	.750	.500	.688

Counts Unlimited, Inc.
PO Box 1178
Corona, CA 92878
(951)268-6268

City of Ontario
N/S: Milliken Avenue
E/W: I-10 WB Ramps/Ontario Mills Pkwy
Weather: Clear

File Name : 13_ONT_Mil_10W AM
Site Code : 00322818
Start Date : 9/20/2022
Page No : 1

Groups Printed- 3 Axle Vehicles

	Milliken Avenue Southbound				Ontario Mills Parkway Westbound				Milliken Avenue Northbound				I-10 Westbound Ramps Eastbound				
Start Time	Left	Thru	Right	App. Total	Left	Thru	Right	App. Total	Left	Thru	Right	App. Total	Left	Thru	Right	App. Total	Int. Total
07:00 AM	0	1	0	1	2	0	0	2	4	0	0	4	0	0	3	3	10
07:15 AM	0	2	0	2	0	0	0	0	9	1	1	11	0	0	0	0	13
07:30 AM	0	3	0	3	0	1	1	2	3	1	3	7	0	0	0	0	12
07:45 AM	0	5	0	5	1	1	0	2	4	3	1	8	0	0	0	0	15
Total	0	11	0	11	3	2	1	6	20	5	5	30	0	0	3	3	50
08:00 AM	0	2	0	2	1	1	0	2	5	2	0	7	0	0	2	2	13
08:15 AM	1	2	0	3	0	0	0	0	7	4	1	12	0	0	0	0	15
08:30 AM	1	7	0	8	0	0	0	0	6	3	4	13	2	1	5	8	29
08:45 AM	0	2	0	2	1	0	1	2	1	2	1	4	0	1	3	4	12
Total	2	13	0	15	2	1	1	4	19	11	6	36	2	2	10	14	69
Grand Total	2	24	0	26	5	3	2	10	39	16	11	66	2	2	13	17	119
Apprch %	7.7	92.3	0		50	30	20		59.1	24.2	16.7		11.8	11.8	76.5		
Total %	1.7	20.2	0	21.8	4.2	2.5	1.7	8.4	32.8	13.4	9.2	55.5	1.7	1.7	10.9	14.3	

	Milliken Avenue Southbound				Ontario Mills Parkway Westbound				Milliken Avenue Northbound				I-10 Westbound Ramps Eastbound				
Start Time	Left	Thru	Right	App. Total	Left	Thru	Right	App. Total	Left	Thru	Right	App. Total	Left	Thru	Right	App. Total	Int. Total
Peak Hour Analysis From 07:45 AM to 08:30 AM - Peak 1 of 1																	
Peak Hour for Entire Intersection Begins at 07:45 AM																	
07:45 AM	0	5	0	5	**1**	**1**	0	**2**	4	3	1	8	0	0	0	0	15
08:00 AM	0	2	0	2	1	1	0	2	5	2	0	7	0	0	2	2	13
08:15 AM	**1**	2	0	3	0	0	0	0	**7**	**4**	1	12	0	0	0	0	15
08:30 AM	1	**7**	0	**8**	0	0	0	0	6	3	**4**	**13**	**2**	**1**	**5**	**8**	**29**
Total Volume	2	16	0	18	2	2	0	4	22	12	6	40	2	1	7	10	72
% App. Total	11.1	88.9	0		50	50	0		55	30	15		20	10	70		
PHF	.500	.571	.000	.563	.500	.500	.000	.500	.786	.750	.375	.769	.250	.250	.350	.313	.621

Counts Unlimited, Inc.
PO Box 1178
Corona, CA 92878
(951)268-6268

City of Ontario
N/S: Milliken Avenue
E/W: I-10 WB Ramps/Ontario Mills Pkwy
Weather: Clear

File Name : 13_ONT_Mil_10W AM
Site Code : 00322818
Start Date : 9/20/2022
Page No : 2

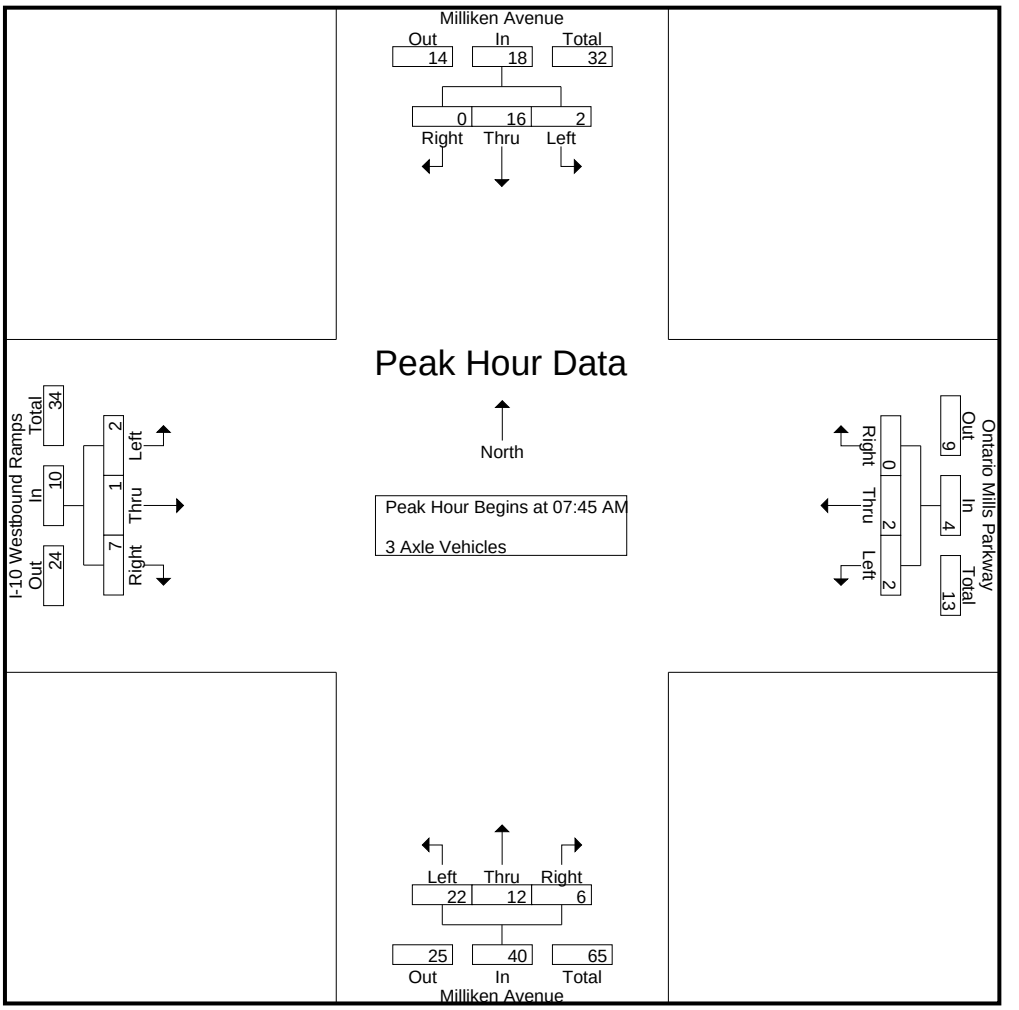

Peak Hour Analysis From 07:45 AM to 08:30 AM - Peak 1 of 1
Peak Hour for Each Approach Begins at:

	07:45 AM				07:45 AM				07:45 AM				07:45 AM			
+0 mins.	0	5	0	5	**1**	**1**	0	**2**	4	3	1	8	0	0	0	0
+15 mins.	0	2	0	2	1	1	0	2	5	2	0	7	0	0	2	2
+30 mins.	**1**	2	0	3	0	0	0	0	**7**	**4**	1	12	0	0	0	0
+45 mins.	1	**7**	0	**8**	0	0	0	0	6	3	**4**	**13**	**2**	**1**	**5**	**8**
Total Volume	2	16	0	18	2	2	0	4	22	12	6	40	2	1	7	10
% App. Total	11.1	88.9	0		50	50	0		55	30	15		20	10	70	
PHF	.500	.571	.000	.563	.500	.500	.000	.500	.786	.750	.375	.769	.250	.250	.350	.313

Counts Unlimited, Inc.
PO Box 1178
Corona, CA 92878
(951)268-6268

City of Ontario
N/S: Milliken Avenue
E/W: I-10 WB Ramps/Ontario Mills Pkwy
Weather: Clear

File Name : 13_ONT_Mil_10W AM
Site Code : 00322818
Start Date : 9/20/2022
Page No : 1

Groups Printed- 4+ Axle Trucks

	Milliken Avenue Southbound				Ontario Mills Parkway Westbound				Milliken Avenue Northbound				I-10 Westbound Ramps Eastbound				
Start Time	Left	Thru	Right	App. Total	Left	Thru	Right	App. Total	Left	Thru	Right	App. Total	Left	Thru	Right	App. Total	Int. Total
07:00 AM	1	6	5	12	3	0	0	3	32	12	3	47	0	0	14	14	76
07:15 AM	0	8	4	12	2	1	1	4	12	7	1	20	2	0	5	7	43
07:30 AM	0	7	2	9	1	4	1	6	17	12	1	30	0	0	4	4	49
07:45 AM	0	8	3	11	1	3	0	4	15	12	1	28	1	0	6	7	50
Total	1	29	14	44	7	8	2	17	76	43	6	125	3	0	29	32	218
08:00 AM	0	5	4	9	4	0	0	4	21	13	4	38	0	0	7	7	58
08:15 AM	0	6	3	9	0	3	0	3	22	9	5	36	0	0	7	7	55
08:30 AM	2	9	4	15	2	2	1	5	25	13	1	39	2	1	15	18	77
08:45 AM	0	9	3	12	3	2	0	5	27	10	1	38	0	1	15	16	71
Total	2	29	14	45	9	7	1	17	95	45	11	151	2	2	44	48	261
Grand Total	3	58	28	89	16	15	3	34	171	88	17	276	5	2	73	80	479
Apprch %	3.4	65.2	31.5		47.1	44.1	8.8		62	31.9	6.2		6.2	2.5	91.2		
Total %	0.6	12.1	5.8	18.6	3.3	3.1	0.6	7.1	35.7	18.4	3.5	57.6	1	0.4	15.2	16.7	

	Milliken Avenue Southbound				Ontario Mills Parkway Westbound				Milliken Avenue Northbound				I-10 Westbound Ramps Eastbound				
Start Time	Left	Thru	Right	App. Total	Left	Thru	Right	App. Total	Left	Thru	Right	App. Total	Left	Thru	Right	App. Total	Int. Total
Peak Hour Analysis From 07:45 AM to 08:30 AM - Peak 1 of 1																	
Peak Hour for Entire Intersection Begins at 07:45 AM																	
07:45 AM	0	8	3	11	1	**3**	0	4	15	12	1	28	1	0	6	7	50
08:00 AM	0	5	**4**	9	**4**	0	0	4	21	**13**	4	38	0	0	7	7	58
08:15 AM	0	6	3	9	0	3	0	3	22	9	**5**	36	0	0	7	7	55
08:30 AM	**2**	**9**	4	**15**	2	2	**1**	**5**	**25**	13	1	**39**	**2**	**1**	**15**	**18**	**77**
Total Volume	2	28	14	44	7	8	1	16	83	47	11	141	3	1	35	39	240
% App. Total	4.5	63.6	31.8		43.8	50	6.2		58.9	33.3	7.8		7.7	2.6	89.7		
PHF	.250	.778	.875	.733	.438	.667	.250	.800	.830	.904	.550	.904	.375	.250	.583	.542	.779

Counts Unlimited, Inc.
PO Box 1178
Corona, CA 92878
(951)268-6268

City of Ontario
N/S: Milliken Avenue
E/W: I-10 WB Ramps/Ontario Mills Pkwy
Weather: Clear

File Name : 13_ONT_Mil_10W AM
Site Code : 00322818
Start Date : 9/20/2022
Page No : 2

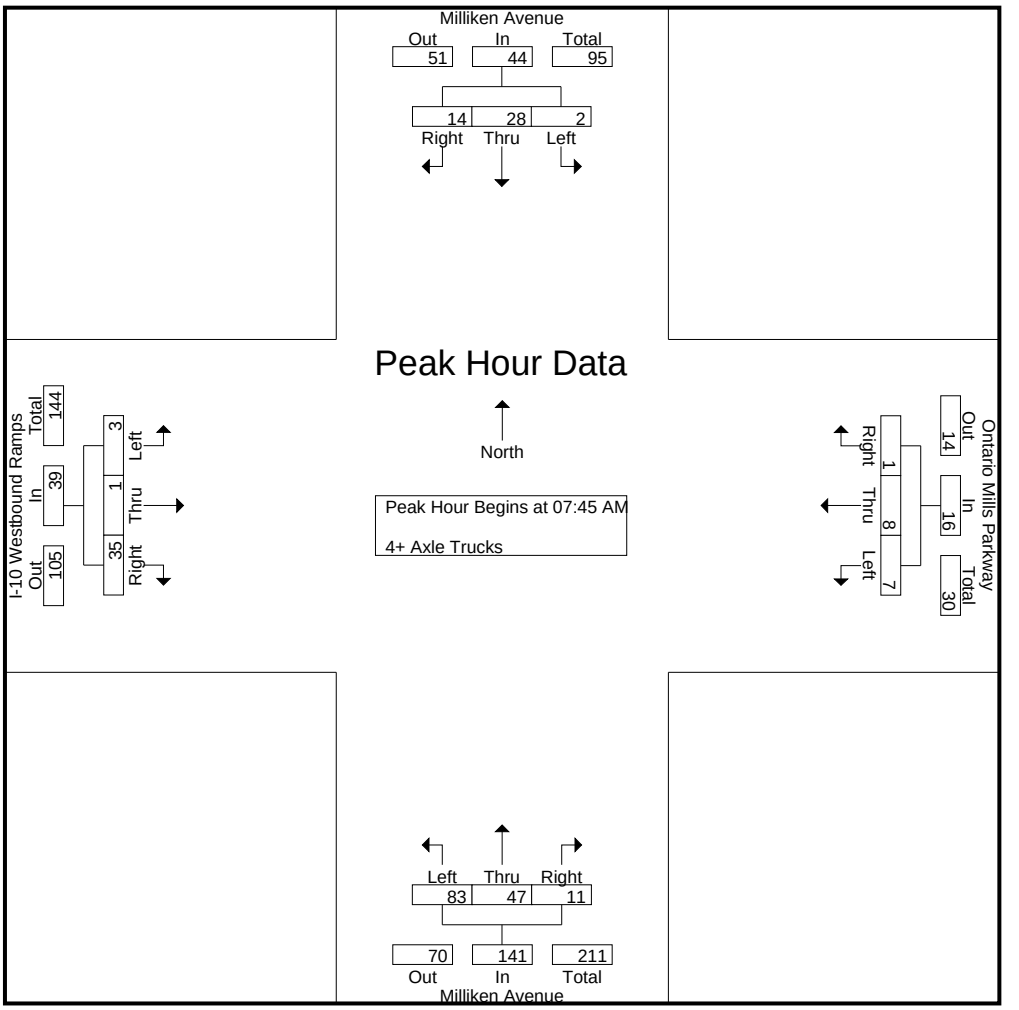

Peak Hour Analysis From 07:45 AM to 08:30 AM - Peak 1 of 1
Peak Hour for Each Approach Begins at:

	07:45 AM				07:45 AM				07:45 AM				07:45 AM			
+0 mins.	0	8	3	11	1	**3**	0	4	15	12	1	28	1	0	6	7
+15 mins.	0	5	**4**	9	**4**	0	0	4	21	**13**	4	38	0	0	7	7
+30 mins.	0	6	3	9	0	3	0	3	22	9	**5**	36	0	0	7	7
+45 mins.	**2**	**9**	4	**15**	2	2	**1**	**5**	**25**	13	1	**39**	**2**	**1**	**15**	**18**
Total Volume	2	28	14	44	7	8	1	16	83	47	11	141	3	1	35	39
% App. Total	4.5	63.6	31.8		43.8	50	6.2		58.9	33.3	7.8		7.7	2.6	89.7	
PHF	.250	.778	.875	.733	.438	.667	.250	.800	.830	.904	.550	.904	.375	.250	.583	.542

Counts Unlimited, Inc.
PO Box 1178
Corona, CA 92878
(951)268-6268

City of Ontario
N/S: Milliken Avenue
E/W: I-10 WB Ramps/Ontario Mills Pkwy
Weather: Clear

File Name : 13_ONT_Mil_10W PM
Site Code : 00322818
Start Date : 9/20/2022
Page No : 1

Groups Printed- Passenger Vehicles - Large 2 Axle Vehicles - 3 Axle Vehicles - 4+ Axle Trucks

	Milliken Avenue Southbound				Ontario Mills Parkway Westbound				Milliken Avenue Northbound				I-10 Westbound Ramps Eastbound				
Start Time	Left	Thru	Right	App. Total	Left	Thru	Right	App. Total	Left	Thru	Right	App. Total	Left	Thru	Right	App. Total	Int. Total
04:00 PM	85	233	93	411	40	48	12	100	57	198	82	337	118	24	55	197	1045
04:15 PM	47	138	76	261	50	46	11	107	46	161	66	273	165	24	63	252	893
04:30 PM	58	181	90	329	31	53	16	100	52	189	93	334	126	28	64	218	981
04:45 PM	66	196	105	367	43	45	8	96	44	203	74	321	177	34	73	284	1068
Total	256	748	364	1368	164	192	47	403	199	751	315	1265	586	110	255	951	3987
05:00 PM	71	226	98	395	45	65	10	120	60	189	83	332	161	40	46	247	1094
05:15 PM	55	203	113	371	63	37	9	109	44	191	74	309	184	57	60	301	1090
05:30 PM	43	184	86	313	45	49	10	104	42	212	81	335	157	32	47	236	988
05:45 PM	57	168	91	316	43	45	13	101	38	206	68	312	157	46	39	242	971
Total	226	781	388	1395	196	196	42	434	184	798	306	1288	659	175	192	1026	4143
Grand Total	482	1529	752	2763	360	388	89	837	383	1549	621	2553	1245	285	447	1977	8130
Apprch %	17.4	55.3	27.2		43	46.4	10.6		15	60.7	24.3		63	14.4	22.6		
Total %	5.9	18.8	9.2	34	4.4	4.8	1.1	10.3	4.7	19.1	7.6	31.4	15.3	3.5	5.5	24.3	
Passenger Vehicles	472	1432	720	2624	327	373	86	786	321	1447	571	2339	1211	271	277	1759	7508
% Passenger Vehicles	97.9	93.7	95.7	95	90.8	96.1	96.6	93.9	83.8	93.4	91.9	91.6	97.3	95.1	62	89	92.3
Large 2 Axle Vehicles	9	36	9	54	15	3	1	19	6	24	11	41	14	1	4	19	133
% Large 2 Axle Vehicles	1.9	2.4	1.2	2	4.2	0.8	1.1	2.3	1.6	1.5	1.8	1.6	1.1	0.4	0.9	1	1.6
3 Axle Vehicles	0	13	3	16	7	2	0	9	10	18	8	36	5	11	40	56	117
% 3 Axle Vehicles	0	0.9	0.4	0.6	1.9	0.5	0	1.1	2.6	1.2	1.3	1.4	0.4	3.9	8.9	2.8	1.4
4+ Axle Trucks	1	48	20	69	11	10	2	23	46	60	31	137	15	2	126	143	372
% 4+ Axle Trucks	0.2	3.1	2.7	2.5	3.1	2.6	2.2	2.7	12	3.9	5	5.4	1.2	0.7	28.2	7.2	4.6

	Milliken Avenue Southbound				Ontario Mills Parkway Westbound				Milliken Avenue Northbound				I-10 Westbound Ramps Eastbound				
Start Time	Left	Thru	Right	App. Total	Left	Thru	Right	App. Total	Left	Thru	Right	App. Total	Left	Thru	Right	App. Total	Int. Total
Peak Hour Analysis From 04:00 PM to 05:45 PM - Peak 1 of 1																	
Peak Hour for Entire Intersection Begins at 04:45 PM																	
04:45 PM	66	196	105	367	43	45	8	96	44	203	74	321	177	34	**73**	284	1068
05:00 PM	**71**	**226**	98	**395**	45	**65**	**10**	**120**	**60**	189	**83**	332	161	40	46	247	**1094**
05:15 PM	55	203	**113**	371	**63**	37	9	109	44	191	74	309	**184**	**57**	60	**301**	1090
05:30 PM	43	184	86	313	45	49	10	104	42	**212**	81	**335**	157	32	47	236	988
Total Volume	235	809	402	1446	196	196	37	429	190	795	312	1297	679	163	226	1068	4240
% App. Total	16.3	55.9	27.8		45.7	45.7	8.6		14.6	61.3	24.1		63.6	15.3	21.2		
PHF	.827	.895	.889	.915	.778	.754	.925	.894	.792	.938	.940	.968	.923	.715	.774	.887	.969

Counts Unlimited, Inc.
PO Box 1178
Corona, CA 92878
(951)268-6268

City of Ontario
N/S: Milliken Avenue
E/W: I-10 WB Ramps/Ontario Mills Pkwy
Weather: Clear

File Name : 13_ONT_Mil_10W PM
Site Code : 00322818
Start Date : 9/20/2022
Page No : 2

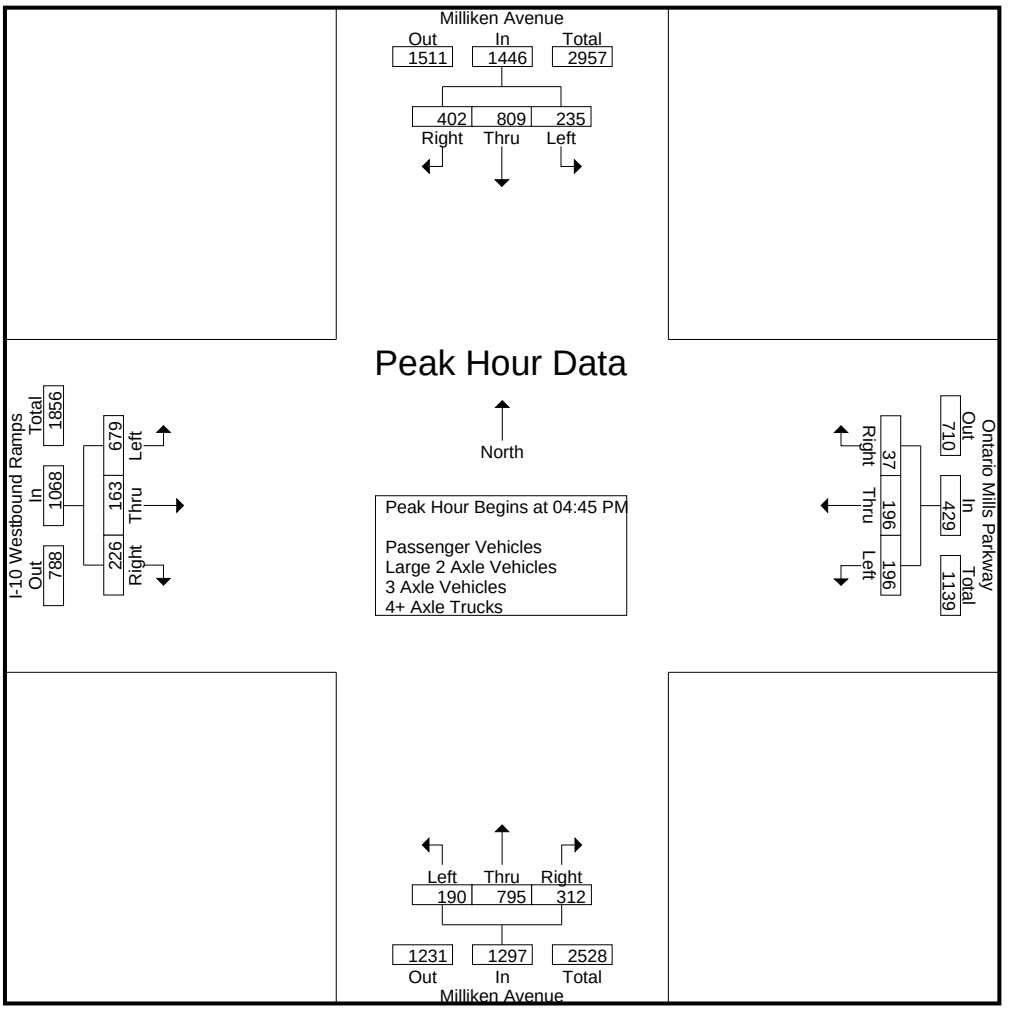

Peak Hour Analysis From 04:00 PM to 05:45 PM - Peak 1 of 1
Peak Hour for Each Approach Begins at:

	04:30 PM				05:00 PM				04:45 PM				04:45 PM			
+0 mins.	58	181	90	329	45	**65**	10	**120**	44	203	74	321	177	34	**73**	284
+15 mins.	66	196	105	367	**63**	37	9	109	**60**	189	**83**	332	161	40	46	247
+30 mins.	**71**	**226**	98	**395**	45	49	10	104	44	191	74	309	**184**	**57**	60	**301**
+45 mins.	55	203	**113**	371	43	45	**13**	101	42	**212**	81	**335**	157	32	47	236
Total Volume	250	806	406	1462	196	196	42	434	190	795	312	1297	679	163	226	1068
% App. Total	17.1	55.1	27.8		45.2	45.2	9.7		14.6	61.3	24.1		63.6	15.3	21.2	
PHF	.880	.892	.898	.925	.778	.754	.808	.904	.792	.938	.940	.968	.923	.715	.774	.887

Counts Unlimited, Inc.
PO Box 1178
Corona, CA 92878
(951)268-6268

City of Ontario
N/S: Milliken Avenue
E/W: I-10 WB Ramps/Ontario Mills Pkwy
Weather: Clear

File Name : 13_ONT_Mil_10W PM
Site Code : 00322818
Start Date : 9/20/2022
Page No : 1

Groups Printed- Passenger Vehicles

	Milliken Avenue Southbound				Ontario Mills Parkway Westbound				Milliken Avenue Northbound				I-10 Westbound Ramps Eastbound				
Start Time	Left	Thru	Right	App. Total	Left	Thru	Right	App. Total	Left	Thru	Right	App. Total	Left	Thru	Right	App. Total	Int. Total
04:00 PM	81	216	90	387	33	45	11	89	47	186	73	306	116	24	41	181	963
04:15 PM	45	127	73	245	45	44	9	98	39	145	57	241	158	23	42	223	807
04:30 PM	56	171	87	314	29	53	16	98	46	178	84	308	115	27	40	182	902
04:45 PM	65	182	99	346	38	42	8	88	38	189	67	294	175	33	48	256	984
Total	247	696	349	1292	145	184	44	373	170	698	281	1149	564	107	171	842	3656
05:00 PM	71	220	92	383	41	63	10	114	52	182	79	313	158	35	24	217	1027
05:15 PM	55	187	110	352	60	36	9	105	40	181	69	290	181	56	34	271	1018
05:30 PM	43	175	82	300	39	47	10	96	34	202	76	312	154	30	26	210	918
05:45 PM	56	154	87	297	42	43	13	98	25	184	66	275	154	43	22	219	889
Total	225	736	371	1332	182	189	42	413	151	749	290	1190	647	164	106	917	3852
Grand Total	472	1432	720	2624	327	373	86	786	321	1447	571	2339	1211	271	277	1759	7508
Apprch %	18	54.6	27.4		41.6	47.5	10.9		13.7	61.9	24.4		68.8	15.4	15.7		
Total %	6.3	19.1	9.6	34.9	4.4	5	1.1	10.5	4.3	19.3	7.6	31.2	16.1	3.6	3.7	23.4	

	Milliken Avenue Southbound				Ontario Mills Parkway Westbound				Milliken Avenue Northbound				I-10 Westbound Ramps Eastbound				
Start Time	Left	Thru	Right	App. Total	Left	Thru	Right	App. Total	Left	Thru	Right	App. Total	Left	Thru	Right	App. Total	Int. Total
Peak Hour Analysis From 04:45 PM to 05:30 PM - Peak 1 of 1																	
Peak Hour for Entire Intersection Begins at 04:45 PM																	
04:45 PM	65	182	99	346	38	42	8	88	38	189	67	294	175	33	**48**	256	984
05:00 PM	**71**	**220**	92	**383**	41	**63**	**10**	**114**	**52**	182	**79**	**313**	158	35	24	217	**1027**
05:15 PM	55	187	**110**	352	**60**	36	9	105	40	181	69	290	**181**	**56**	34	**271**	1018
05:30 PM	43	175	82	300	39	47	10	96	34	**202**	76	312	154	30	26	210	918
Total Volume	234	764	383	1381	178	188	37	403	164	754	291	1209	668	154	132	954	3947
% App. Total	16.9	55.3	27.7		44.2	46.7	9.2		13.6	62.4	24.1		70	16.1	13.8		
PHF	.824	.868	.870	.901	.742	.746	.925	.884	.788	.933	.921	.966	.923	.688	.688	.880	.961

Counts Unlimited, Inc.
PO Box 1178
Corona, CA 92878
(951)268-6268

City of Ontario
N/S: Milliken Avenue
E/W: I-10 WB Ramps/Ontario Mills Pkwy
Weather: Clear

File Name : 13_ONT_Mil_10W PM
Site Code : 00322818
Start Date : 9/20/2022
Page No : 2

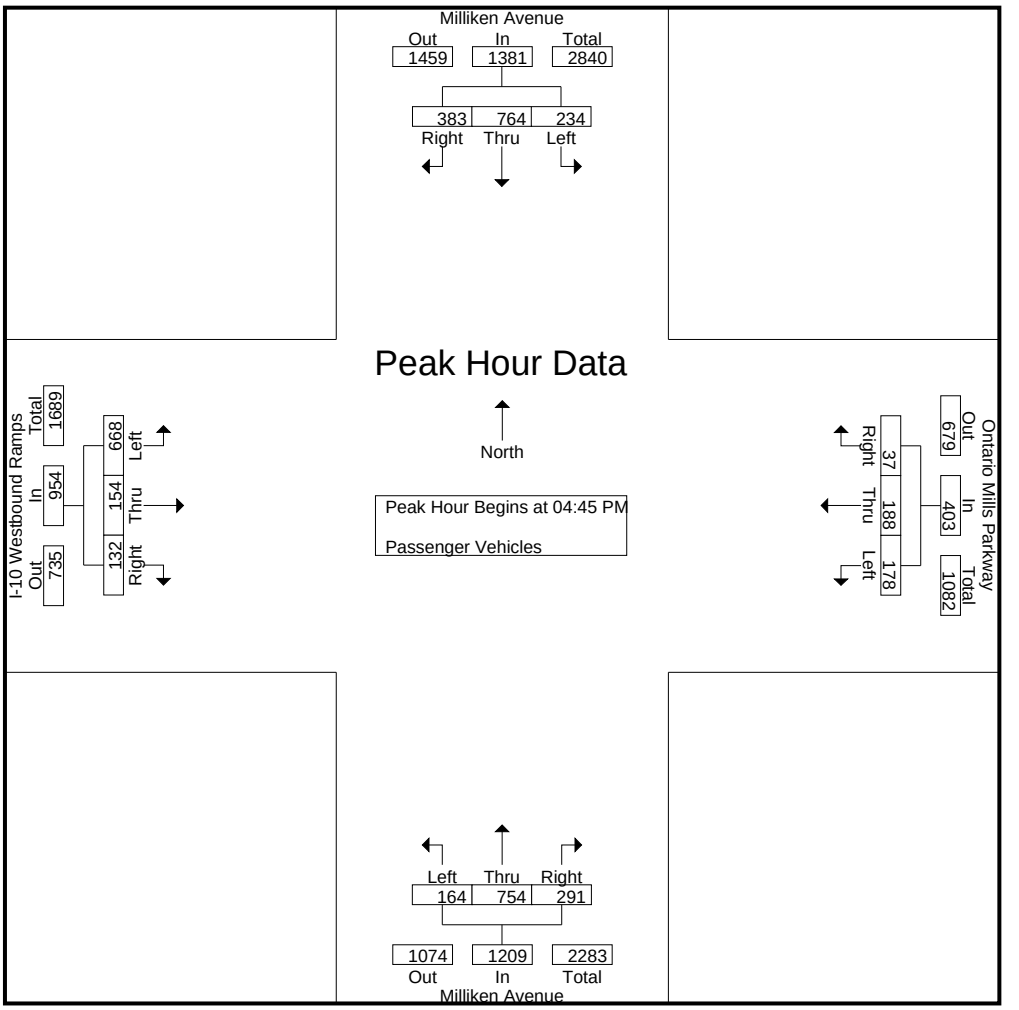

Peak Hour Analysis From 04:45 PM to 05:30 PM - Peak 1 of 1
Peak Hour for Each Approach Begins at:

	04:45 PM				04:45 PM				04:45 PM				04:45 PM			
+0 mins.	65	182	99	346	38	42	8	88	38	189	67	294	175	33	**48**	256
+15 mins.	**71**	**220**	92	**383**	41	**63**	**10**	**114**	**52**	182	**79**	**313**	158	35	24	217
+30 mins.	55	187	**110**	352	**60**	36	9	105	40	181	69	290	**181**	**56**	34	**271**
+45 mins.	43	175	82	300	39	47	10	96	34	**202**	76	312	154	30	26	210
Total Volume	234	764	383	1381	178	188	37	403	164	754	291	1209	668	154	132	954
% App. Total	16.9	55.3	27.7		44.2	46.7	9.2		13.6	62.4	24.1		70	16.1	13.8	
PHF	.824	.868	.870	.901	.742	.746	.925	.884	.788	.933	.921	.966	.923	.688	.688	.880

Counts Unlimited, Inc.
PO Box 1178
Corona, CA 92878
(951)268-6268

City of Ontario
N/S: Milliken Avenue
E/W: I-10 WB Ramps/Ontario Mills Pkwy
Weather: Clear

File Name : 13_ONT_Mil_10W PM
Site Code : 00322818
Start Date : 9/20/2022
Page No : 1

Groups Printed- Large 2 Axle Vehicles

	Milliken Avenue Southbound				Ontario Mills Parkway Westbound				Milliken Avenue Northbound				I-10 Westbound Ramps Eastbound				
Start Time	Left	Thru	Right	App. Total	Left	Thru	Right	App. Total	Left	Thru	Right	App. Total	Left	Thru	Right	App. Total	Int. Total
04:00 PM	4	4	1	9	4	2	1	7	2	3	2	7	0	0	0	0	23
04:15 PM	1	2	1	4	2	0	0	2	1	3	1	5	3	0	1	4	15
04:30 PM	2	4	1	7	1	0	0	1	1	4	0	5	5	0	0	5	18
04:45 PM	1	7	0	8	2	0	0	2	1	4	3	8	1	1	0	2	20
Total	8	17	3	28	9	2	1	12	5	14	6	25	9	1	1	11	76
05:00 PM	0	2	2	4	1	0	0	1	1	2	1	4	0	0	2	2	11
05:15 PM	0	6	0	6	1	0	0	1	0	2	1	3	2	0	1	3	13
05:30 PM	0	5	1	6	4	0	0	4	0	1	2	3	2	0	0	2	15
05:45 PM	1	6	3	10	0	1	0	1	0	5	1	6	1	0	0	1	18
Total	1	19	6	26	6	1	0	7	1	10	5	16	5	0	3	8	57
Grand Total	9	36	9	54	15	3	1	19	6	24	11	41	14	1	4	19	133
Apprch %	16.7	66.7	16.7		78.9	15.8	5.3		14.6	58.5	26.8		73.7	5.3	21.1		
Total %	6.8	27.1	6.8	40.6	11.3	2.3	0.8	14.3	4.5	18	8.3	30.8	10.5	0.8	3	14.3	

	Milliken Avenue Southbound				Ontario Mills Parkway Westbound				Milliken Avenue Northbound				I-10 Westbound Ramps Eastbound				
Start Time	Left	Thru	Right	App. Total	Left	Thru	Right	App. Total	Left	Thru	Right	App. Total	Left	Thru	Right	App. Total	Int. Total
Peak Hour Analysis From 04:45 PM to 05:30 PM - Peak 1 of 1																	
Peak Hour for Entire Intersection Begins at 04:45 PM																	
04:45 PM	**1**	**7**	0	**8**	2	0	0	2	**1**	**4**	**3**	**8**	1	**1**	0	2	**20**
05:00 PM	0	2	**2**	4	1	0	0	1	1	2	1	4	0	0	**2**	2	11
05:15 PM	0	6	0	6	1	0	0	1	0	2	1	3	**2**	0	1	**3**	13
05:30 PM	0	5	1	6	**4**	0	0	**4**	0	1	2	3	2	0	0	2	15
Total Volume	1	20	3	24	8	0	0	8	2	9	7	18	5	1	3	9	59
% App. Total	4.2	83.3	12.5		100	0	0		11.1	50	38.9		55.6	11.1	33.3		
PHF	.250	.714	.375	.750	.500	.000	.000	.500	.500	.563	.583	.563	.625	.250	.375	.750	.738

Counts Unlimited, Inc.
PO Box 1178
Corona, CA 92878
(951)268-6268

City of Ontario
N/S: Milliken Avenue
E/W: I-10 WB Ramps/Ontario Mills Pkwy
Weather: Clear

File Name : 13_ONT_Mil_10W PM
Site Code : 00322818
Start Date : 9/20/2022
Page No : 2

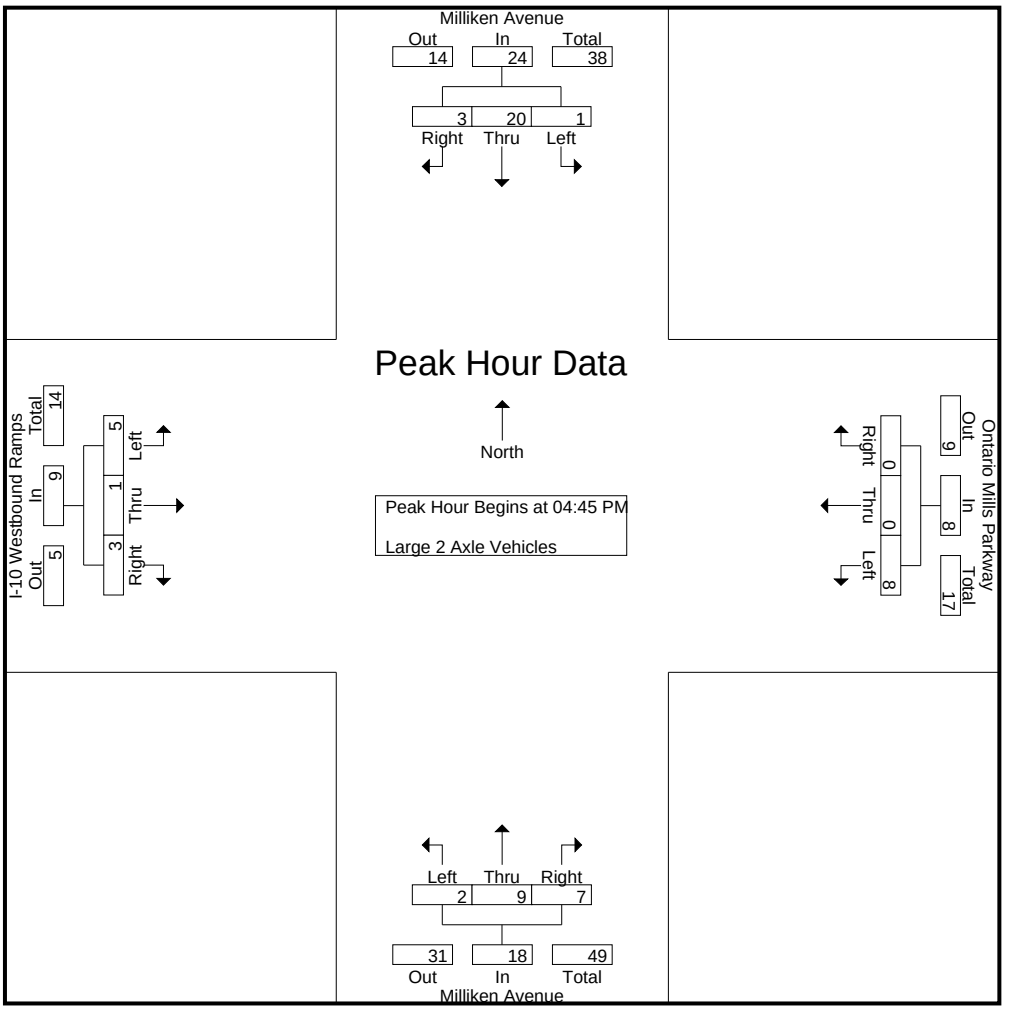

Peak Hour Analysis From 04:45 PM to 05:30 PM - Peak 1 of 1
Peak Hour for Each Approach Begins at:

	04:45 PM				04:45 PM				04:45 PM				04:45 PM			
+0 mins.	**1**	**7**	0	**8**	2	0	0	2	**1**	**4**	**3**	**8**	1	**1**	0	2
+15 mins.	0	2	**2**	4	1	0	0	1	1	2	1	4	0	0	**2**	2
+30 mins.	0	6	0	6	1	0	0	1	0	2	1	3	**2**	0	1	**3**
+45 mins.	0	5	1	6	**4**	0	0	**4**	0	1	2	3	2	0	0	2
Total Volume	1	20	3	24	8	0	0	8	2	9	7	18	5	1	3	9
% App. Total	4.2	83.3	12.5		100	0	0		11.1	50	38.9		55.6	11.1	33.3	
PHF	.250	.714	.375	.750	.500	.000	.000	.500	.500	.563	.583	.563	.625	.250	.375	.750

Counts Unlimited, Inc.
PO Box 1178
Corona, CA 92878
(951)268-6268

City of Ontario
N/S: Milliken Avenue
E/W: I-10 WB Ramps/Ontario Mills Pkwy
Weather: Clear

File Name : 13_ONT_Mil_10W PM
Site Code : 00322818
Start Date : 9/20/2022
Page No : 1

Groups Printed- 3 Axle Vehicles

	Milliken Avenue Southbound				Ontario Mills Parkway Westbound				Milliken Avenue Northbound				I-10 Westbound Ramps Eastbound				
Start Time	Left	Thru	Right	App. Total	Left	Thru	Right	App. Total	Left	Thru	Right	App. Total	Left	Thru	Right	App. Total	Int. Total
04:00 PM	0	3	0	3	0	0	0	0	1	3	2	6	0	0	3	3	12
04:15 PM	0	2	0	2	1	0	0	1	0	2	2	4	2	1	6	9	16
04:30 PM	0	2	1	3	0	0	0	0	0	0	0	0	2	1	3	6	9
04:45 PM	0	1	2	3	3	1	0	4	0	5	1	6	1	0	7	8	21
Total	0	8	3	11	4	1	0	5	1	10	5	16	5	2	19	26	58
05:00 PM	0	2	0	2	1	0	0	1	3	2	1	6	0	5	6	11	20
05:15 PM	0	1	0	1	1	0	0	1	2	3	1	6	0	0	6	6	14
05:30 PM	0	1	0	1	1	1	0	2	2	1	1	4	0	2	7	9	16
05:45 PM	0	1	0	1	0	0	0	0	2	2	0	4	0	2	2	4	9
Total	0	5	0	5	3	1	0	4	9	8	3	20	0	9	21	30	59
Grand Total	0	13	3	16	7	2	0	9	10	18	8	36	5	11	40	56	117
Apprch %	0	81.2	18.8		77.8	22.2	0		27.8	50	22.2		8.9	19.6	71.4		
Total %	0	11.1	2.6	13.7	6	1.7	0	7.7	8.5	15.4	6.8	30.8	4.3	9.4	34.2	47.9	

	Milliken Avenue Southbound				Ontario Mills Parkway Westbound				Milliken Avenue Northbound				I-10 Westbound Ramps Eastbound				
Start Time	Left	Thru	Right	App. Total	Left	Thru	Right	App. Total	Left	Thru	Right	App. Total	Left	Thru	Right	App. Total	Int. Total
Peak Hour Analysis From 04:45 PM to 05:30 PM - Peak 1 of 1																	
Peak Hour for Entire Intersection Begins at 04:45 PM																	
04:45 PM	0	1	**2**	**3**	**3**	**1**	0	**4**	0	**5**	**1**	**6**	**1**	0	**7**	8	**21**
05:00 PM	0	**2**	0	2	1	0	0	1	**3**	2	1	6	0	**5**	6	**11**	20
05:15 PM	0	1	0	1	1	0	0	1	2	3	1	6	0	0	6	6	14
05:30 PM	0	1	0	1	1	1	0	2	2	1	1	4	0	2	7	9	16
Total Volume	0	5	2	7	6	2	0	8	7	11	4	22	1	7	26	34	71
% App. Total	0	71.4	28.6		75	25	0		31.8	50	18.2		2.9	20.6	76.5		
PHF	.000	.625	.250	.583	.500	.500	.000	.500	.583	.550	1.00	.917	.250	.350	.929	.773	.845

Counts Unlimited, Inc.
PO Box 1178
Corona, CA 92878
(951)268-6268

City of Ontario
N/S: Milliken Avenue
E/W: I-10 WB Ramps/Ontario Mills Pkwy
Weather: Clear

File Name : 13_ONT_Mil_10W PM
Site Code : 00322818
Start Date : 9/20/2022
Page No : 2

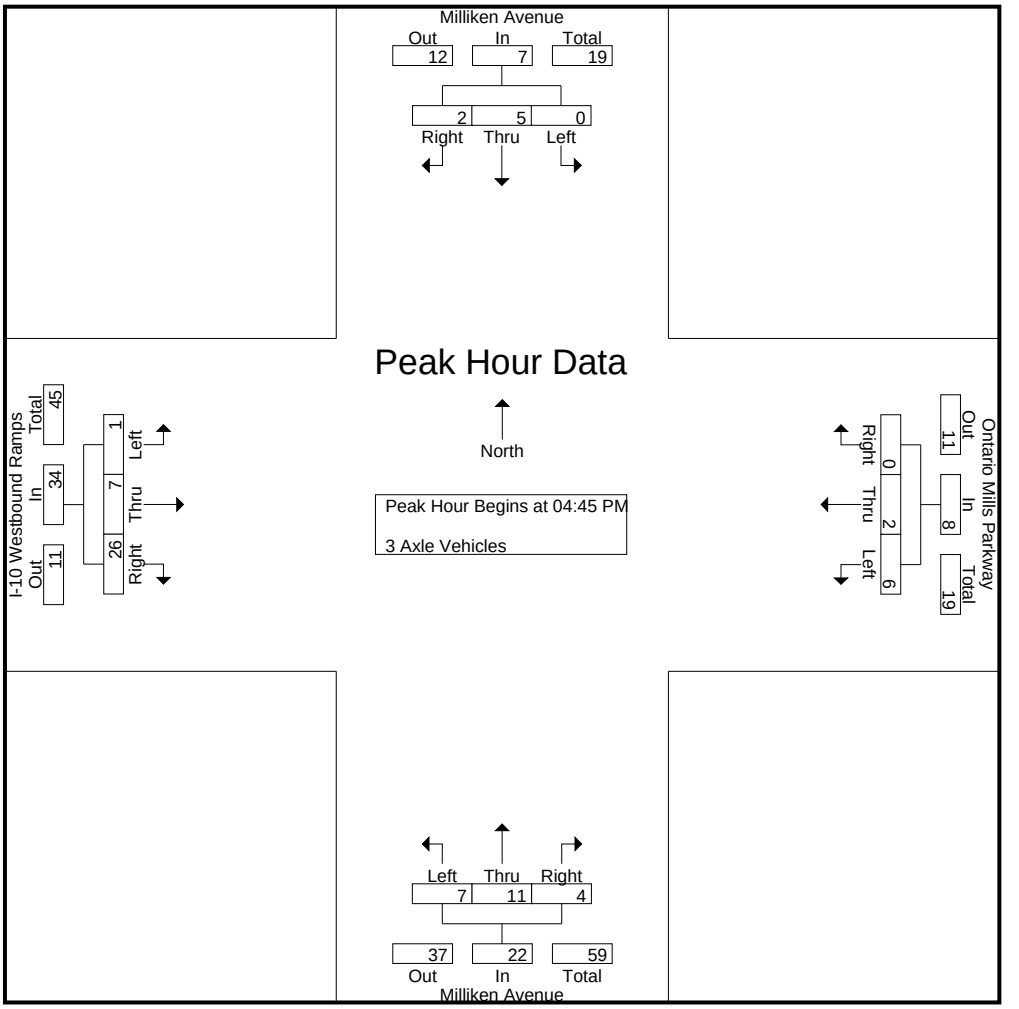

Peak Hour Analysis From 04:45 PM to 05:30 PM - Peak 1 of 1
Peak Hour for Each Approach Begins at:

	04:45 PM				04:45 PM				04:45 PM				04:45 PM			
+0 mins.	0	1	**2**	**3**	**3**	**1**	0	**4**	0	**5**	**1**	**6**	**1**	0	**7**	8
+15 mins.	0	**2**	0	2	1	0	0	1	**3**	2	1	6	0	**5**	6	**11**
+30 mins.	0	1	0	1	1	0	0	1	2	3	1	6	0	0	6	6
+45 mins.	0	1	0	1	1	1	0	2	2	1	1	4	0	2	7	9
Total Volume	0	5	2	7	6	2	0	8	7	11	4	22	1	7	26	34
% App. Total	0	71.4	28.6		75	25	0		31.8	50	18.2		2.9	20.6	76.5	
PHF	.000	.625	.250	.583	.500	.500	.000	.500	.583	.550	1.000	.917	.250	.350	.929	.773

Counts Unlimited, Inc.
PO Box 1178
Corona, CA 92878
(951)268-6268

City of Ontario
N/S: Milliken Avenue
E/W: I-10 WB Ramps/Ontario Mills Pkwy
Weather: Clear

File Name : 13_ONT_Mil_10W PM
Site Code : 00322818
Start Date : 9/20/2022
Page No : 1

Groups Printed- 4+ Axle Trucks

	Milliken Avenue Southbound				Ontario Mills Parkway Westbound				Milliken Avenue Northbound				I-10 Westbound Ramps Eastbound				
Start Time	Left	Thru	Right	App. Total	Left	Thru	Right	App. Total	Left	Thru	Right	App. Total	Left	Thru	Right	App. Total	Int. Total
04:00 PM	0	10	2	12	3	1	0	4	7	6	5	18	2	0	11	13	47
04:15 PM	1	7	2	10	2	2	2	6	6	11	6	23	2	0	14	16	55
04:30 PM	0	4	1	5	1	0	0	1	5	7	9	21	4	0	21	25	52
04:45 PM	0	6	4	10	0	2	0	2	5	5	3	13	0	0	18	18	43
Total	1	27	9	37	6	5	2	13	23	29	23	75	8	0	64	72	197
05:00 PM	0	2	4	6	2	2	0	4	4	3	2	9	3	0	14	17	36
05:15 PM	0	9	3	12	1	1	0	2	2	5	3	10	1	1	19	21	45
05:30 PM	0	3	3	6	1	1	0	2	6	8	2	16	1	0	14	15	39
05:45 PM	0	7	1	8	1	1	0	2	11	15	1	27	2	1	15	18	55
Total	0	21	11	32	5	5	0	10	23	31	8	62	7	2	62	71	175
Grand Total	1	48	20	69	11	10	2	23	46	60	31	137	15	2	126	143	372
Apprch %	1.4	69.6	29		47.8	43.5	8.7		33.6	43.8	22.6		10.5	1.4	88.1		
Total %	0.3	12.9	5.4	18.5	3	2.7	0.5	6.2	12.4	16.1	8.3	36.8	4	0.5	33.9	38.4	

	Milliken Avenue Southbound				Ontario Mills Parkway Westbound				Milliken Avenue Northbound				I-10 Westbound Ramps Eastbound				
Start Time	Left	Thru	Right	App. Total	Left	Thru	Right	App. Total	Left	Thru	Right	App. Total	Left	Thru	Right	App. Total	Int. Total
Peak Hour Analysis From 04:45 PM to 05:30 PM - Peak 1 of 1																	
Peak Hour for Entire Intersection Begins at 04:45 PM																	
04:45 PM	0	6	**4**	10	0	**2**	0	2	5	5	**3**	13	0	0	18	18	43
05:00 PM	0	2	4	6	**2**	2	0	**4**	4	3	2	9	**3**	0	14	17	36
05:15 PM	0	**9**	3	**12**	1	1	0	2	2	5	3	10	1	**1**	**19**	**21**	**45**
05:30 PM	0	3	3	6	1	1	0	2	**6**	**8**	2	**16**	1	0	14	15	39
Total Volume	0	20	14	34	4	6	0	10	17	21	10	48	5	1	65	71	163
% App. Total	0	58.8	41.2		40	60	0		35.4	43.8	20.8		7	1.4	91.5		
PHF	.000	.556	.875	.708	.500	.750	.000	.625	.708	.656	.833	.750	.417	.250	.855	.845	.906

Counts Unlimited, Inc.
PO Box 1178
Corona, CA 92878
(951)268-6268

City of Ontario
N/S: Milliken Avenue
E/W: I-10 WB Ramps/Ontario Mills Pkwy
Weather: Clear

File Name : 13_ONT_Mil_10W PM
Site Code : 00322818
Start Date : 9/20/2022
Page No : 2

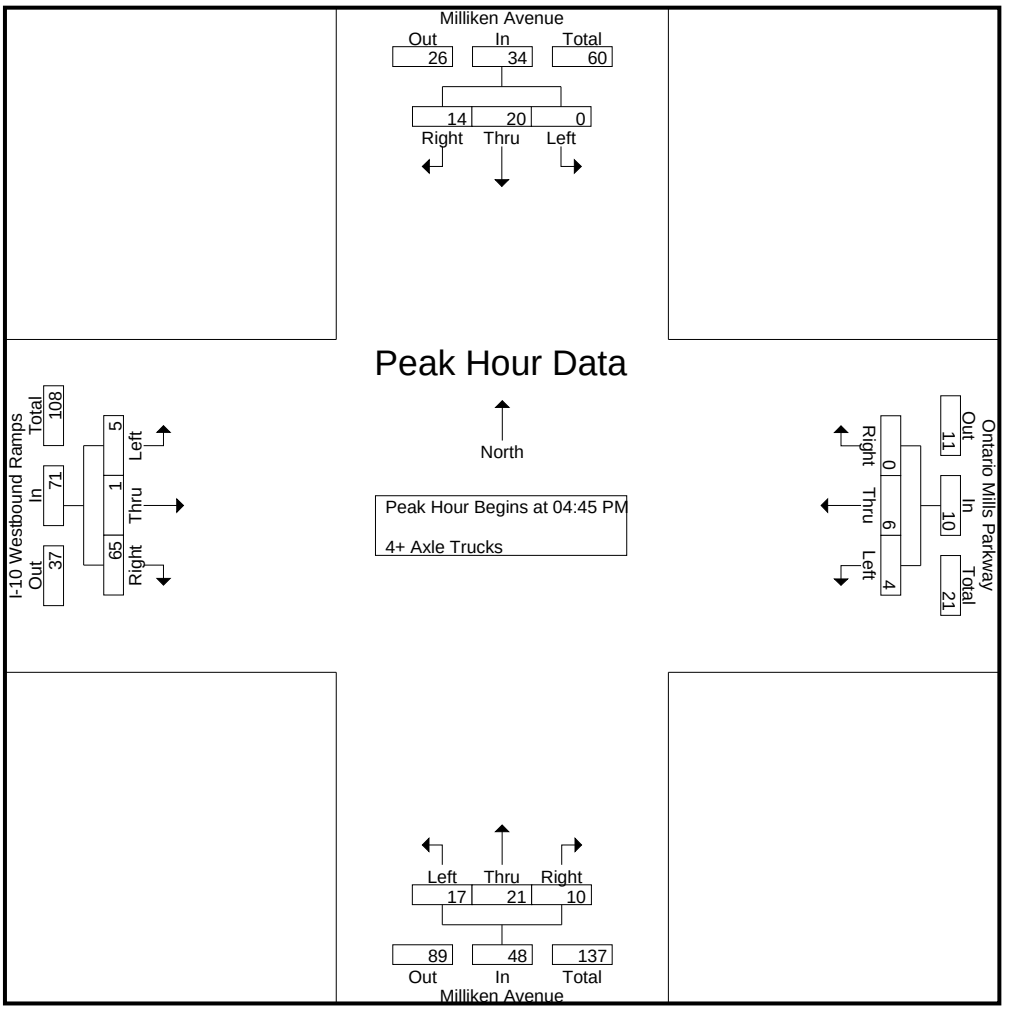

Peak Hour Analysis From 04:45 PM to 05:30 PM - Peak 1 of 1
Peak Hour for Each Approach Begins at:

	04:45 PM				04:45 PM				04:45 PM				04:45 PM			
+0 mins.	0	6	**4**	10	0	**2**	0	2	5	5	**3**	13	0	0	18	18
+15 mins.	0	2	4	6	**2**	2	0	**4**	4	3	2	9	**3**	0	14	17
+30 mins.	0	**9**	3	**12**	1	1	0	2	2	5	3	10	1	**1**	**19**	**21**
+45 mins.	0	3	3	6	1	1	0	2	**6**	**8**	2	**16**	1	0	14	15
Total Volume	0	20	14	34	4	6	0	10	17	21	10	48	5	1	65	71
% App. Total	0	58.8	41.2		40	60	0		35.4	43.8	20.8		7	1.4	91.5	
PHF	.000	.556	.875	.708	.500	.750	.000	.625	.708	.656	.833	.750	.417	.250	.855	.845

Location: Ontario
N/S: Milliken Avenue
E/W: I-10 WB Ramps/Ontario Mills Pkwy

Date: 9/20/2022
Day: Tuesday

PEDESTRIANS

	North Leg Milliken Avenue	East Leg Ontario Mills Parkway	South Leg Milliken Avenue	West Leg I-10 WB Ramps	
	Pedestrians	Pedestrians	Pedestrians	Pedestrians	
7:00 AM	0	1	0	0	1
7:15 AM	0	0	0	0	0
7:30 AM	0	1	0	0	1
7:45 AM	0	0	0	0	0
8:00 AM	0	1	0	0	1
8:15 AM	0	1	0	0	1
8:30 AM	0	2	0	0	2
8:45 AM	0	0	0	0	0
TOTAL VOLUMES:	0	6	0	0	6

	North Leg Milliken Avenue	East Leg Ontario Mills Parkway	South Leg Milliken Avenue	West Leg I-10 WB Ramps	
	Pedestrians	Pedestrians	Pedestrians	Pedestrians	
4:00 PM	0	2	0	0	2
4:15 PM	0	2	0	0	2
4:30 PM	0	1	0	0	1
4:45 PM	0	0	0	0	0
5:00 PM	0	3	0	0	3
5:15 PM	0	2	0	0	2
5:30 PM	0	3	0	0	3
5:45 PM	0	0	0	0	0
TOTAL VOLUMES:	0	13	0	0	13

Counts Unlimited, Inc.
PO Box 1178
Corona, CA 92878
951-268-6268

Location: Ontario
N/S: Milliken Avenue
E/W: I-10 WB Ramps/Ontario Mills Pkwy

Date: 9/20/2022
Day: Tuesday

BICYCLES

	Southbound Milliken Avenue			Westbound Ontario Mills Parkway			Northbound Milliken Avenue			Eastbound I-10 WB Ramps			
	Left	Thru	Right	Left	Thru	Right	Left	Thru	Right	Left	Thru	Right	
7:00 AM	0	0	0	0	0	0	0	0	0	0	0	0	0
7:15 AM	0	0	0	0	0	0	0	0	0	0	0	0	0
7:30 AM	0	0	0	0	0	0	0	0	0	0	0	0	0
7:45 AM	0	0	0	0	0	0	0	0	0	0	0	0	0
8:00 AM	0	1	0	0	0	0	0	0	0	0	0	0	1
8:15 AM	0	1	0	0	0	0	0	1	0	0	0	0	2
8:30 AM	0	0	0	0	0	0	0	0	0	0	0	0	0
8:45 AM	0	0	0	0	0	0	0	0	0	0	0	0	0
TOTAL VOLUMES:	0	2	0	0	0	0	0	1	0	0	0	0	3

	Southbound Milliken Avenue			Westbound Ontario Mills Parkway			Northbound Milliken Avenue			Eastbound I-10 WB Ramps			
	Left	Thru	Right	Left	Thru	Right	Left	Thru	Right	Left	Thru	Right	
4:00 PM	0	0	0	0	0	0	0	1	0	0	0	0	1
4:15 PM	0	0	0	0	0	0	0	1	0	0	0	0	1
4:30 PM	0	0	0	0	0	0	0	0	0	0	0	0	0
4:45 PM	0	0	0	0	0	0	0	0	0	0	0	0	0
5:00 PM	0	0	0	0	0	0	0	0	0	0	0	0	0
5:15 PM	0	0	0	0	0	0	0	0	0	0	0	0	0
5:30 PM	0	0	1	0	0	0	0	0	0	0	0	0	1
5:45 PM	0	0	0	0	0	0	0	1	0	0	0	0	1
TOTAL VOLUMES:	0	0	1	0	0	0	0	3	0	0	0	0	4

Counts Unlimited, Inc.
PO Box 1178
Corona, CA 92878
951-268-6268

Counts Unlimited, Inc.
PO Box 1178
Corona, CA 92878
(951)268-6268

City of Ontario
N/S: Milliken Avenue
E/W: I-10 Eastbound Ramps
Weather: Clear

File Name : 14_ONT_Mil_10E AM
Site Code : 00322818
Start Date : 9/20/2022
Page No : 1

Groups Printed- Passenger Vehicles - Large 2 Axle Vehicles - 3 Axle Vehicles - 4+ Axle Trucks

	Milliken Avenue Southbound			Milliken Avenue Northbound			I-10 Eastbound Ramps Eastbound			
Start Time	Thru	Right	App. Total	Left	Thru	App. Total	Left	Right	App. Total	Int. Total
07:00 AM	135	38	173	26	104	130	71	93	164	467
07:15 AM	90	57	147	26	102	128	108	81	189	464
07:30 AM	159	42	201	33	130	163	107	98	205	569
07:45 AM	182	53	235	31	150	181	144	118	262	678
Total	566	190	756	116	486	602	430	390	820	2178
08:00 AM	172	49	221	35	163	198	113	123	236	655
08:15 AM	162	39	201	28	127	155	120	124	244	600
08:30 AM	158	50	208	33	150	183	110	93	203	594
08:45 AM	172	48	220	27	152	179	137	115	252	651
Total	664	186	850	123	592	715	480	455	935	2500
Grand Total	1230	376	1606	239	1078	1317	910	845	1755	4678
Apprch %	76.6	23.4		18.1	81.9		51.9	48.1		
Total %	26.3	8	34.3	5.1	23	28.2	19.5	18.1	37.5	
Passenger Vehicles	1036	321	1357	75	797	872	795	703	1498	3727
% Passenger Vehicles	84.2	85.4	84.5	31.4	73.9	66.2	87.4	83.2	85.4	79.7
Large 2 Axle Vehicles	37	21	58	14	37	51	33	31	64	173
% Large 2 Axle Vehicles	3	5.6	3.6	5.9	3.4	3.9	3.6	3.7	3.6	3.7
3 Axle Vehicles	27	10	37	19	30	49	38	15	53	139
% 3 Axle Vehicles	2.2	2.7	2.3	7.9	2.8	3.7	4.2	1.8	3	3
4+ Axle Trucks	130	24	154	131	214	345	44	96	140	639
% 4+ Axle Trucks	10.6	6.4	9.6	54.8	19.9	26.2	4.8	11.4	8	13.7

	Milliken Avenue Southbound			Milliken Avenue Northbound			I-10 Eastbound Ramps Eastbound			
Start Time	Thru	Right	App. Total	Left	Thru	App. Total	Left	Right	App. Total	Int. Total
Peak Hour Analysis From 07:00 AM to 08:45 AM - Peak 1 of 1										
Peak Hour for Entire Intersection Begins at 07:45 AM										
07:45 AM	**182**	**53**	**235**	31	150	181	**144**	118	**262**	**678**
08:00 AM	172	49	221	**35**	**163**	**198**	113	123	236	655
08:15 AM	162	39	201	28	127	155	120	**124**	244	600
08:30 AM	158	50	208	33	150	183	110	93	203	594
Total Volume	674	191	865	127	590	717	487	458	945	2527
% App. Total	77.9	22.1		17.7	82.3		51.5	48.5		
PHF	.926	.901	.920	.907	.905	.905	.845	.923	.902	.932

Counts Unlimited, Inc.
PO Box 1178
Corona, CA 92878
(951)268-6268

City of Ontario
N/S: Milliken Avenue
E/W: I-10 Eastbound Ramps
Weather: Clear

File Name : 14_ONT_Mil_10E AM
Site Code : 00322818
Start Date : 9/20/2022
Page No : 2

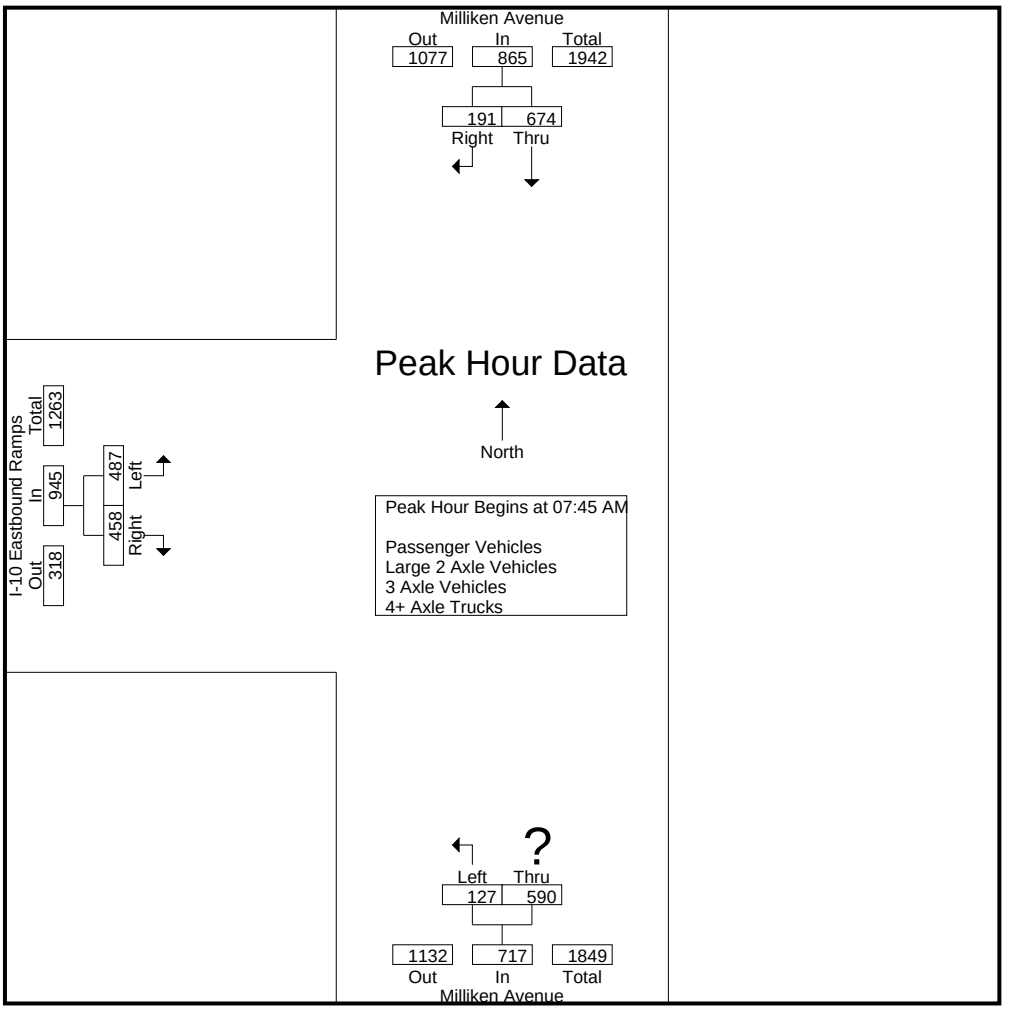

Peak Hour Analysis From 07:00 AM to 08:45 AM - Peak 1 of 1
Peak Hour for Each Approach Begins at:

	07:45 AM			07:45 AM			07:30 AM		
+0 mins.	**182**	**53**	**235**	31	150	181	107	98	205
+15 mins.	172	49	221	**35**	**163**	**198**	**144**	118	**262**
+30 mins.	162	39	201	28	127	155	113	123	236
+45 mins.	158	50	208	33	150	183	120	**124**	244
Total Volume	674	191	865	127	590	717	484	463	947
% App. Total	77.9	22.1		17.7	82.3		51.1	48.9	
PHF	.926	.901	.920	.907	.905	.905	.840	.933	.904

Counts Unlimited, Inc.
PO Box 1178
Corona, CA 92878
(951)268-6268

City of Ontario
N/S: Milliken Avenue
E/W: I-10 Eastbound Ramps
Weather: Clear

File Name : 14_ONT_Mil_10E AM
Site Code : 00322818
Start Date : 9/20/2022
Page No : 1

Groups Printed- Passenger Vehicles

	Milliken Avenue Southbound			Milliken Avenue Northbound			I-10 Eastbound Ramps Eastbound			
Start Time	Thru	Right	App. Total	Left	Thru	App. Total	Left	Right	App. Total	Int. Total
07:00 AM	106	33	139	6	56	62	66	76	142	343
07:15 AM	82	49	131	3	80	83	93	73	166	380
07:30 AM	138	38	176	13	97	110	96	83	179	465
07:45 AM	156	46	202	8	121	129	128	105	233	564
Total	482	166	648	30	354	384	383	337	720	1752
08:00 AM	149	41	190	17	130	147	100	106	206	543
08:15 AM	148	34	182	8	92	100	101	100	201	483
08:30 AM	126	39	165	13	110	123	94	72	166	454
08:45 AM	131	41	172	7	111	118	117	88	205	495
Total	554	155	709	45	443	488	412	366	778	1975
Grand Total	1036	321	1357	75	797	872	795	703	1498	3727
Apprch %	76.3	23.7		8.6	91.4		53.1	46.9		
Total %	27.8	8.6	36.4	2	21.4	23.4	21.3	18.9	40.2	

	Milliken Avenue Southbound			Milliken Avenue Northbound			I-10 Eastbound Ramps Eastbound			
Start Time	Thru	Right	App. Total	Left	Thru	App. Total	Left	Right	App. Total	Int. Total
Peak Hour Analysis From 07:45 AM to 08:30 AM - Peak 1 of 1										
Peak Hour for Entire Intersection Begins at 07:45 AM										
07:45 AM	**156**	**46**	**202**	8	121	129	**128**	105	**233**	**564**
08:00 AM	149	41	190	**17**	**130**	**147**	100	**106**	206	543
08:15 AM	148	34	182	8	92	100	101	100	201	483
08:30 AM	126	39	165	13	110	123	94	72	166	454
Total Volume	579	160	739	46	453	499	423	383	806	2044
% App. Total	78.3	21.7		9.2	90.8		52.5	47.5		
PHF	.928	.870	.915	.676	.871	.849	.826	.903	.865	.906

Counts Unlimited, Inc.
PO Box 1178
Corona, CA 92878
(951)268-6268

City of Ontario
N/S: Milliken Avenue
E/W: I-10 Eastbound Ramps
Weather: Clear

File Name : 14_ONT_Mil_10E AM
Site Code : 00322818
Start Date : 9/20/2022
Page No : 2

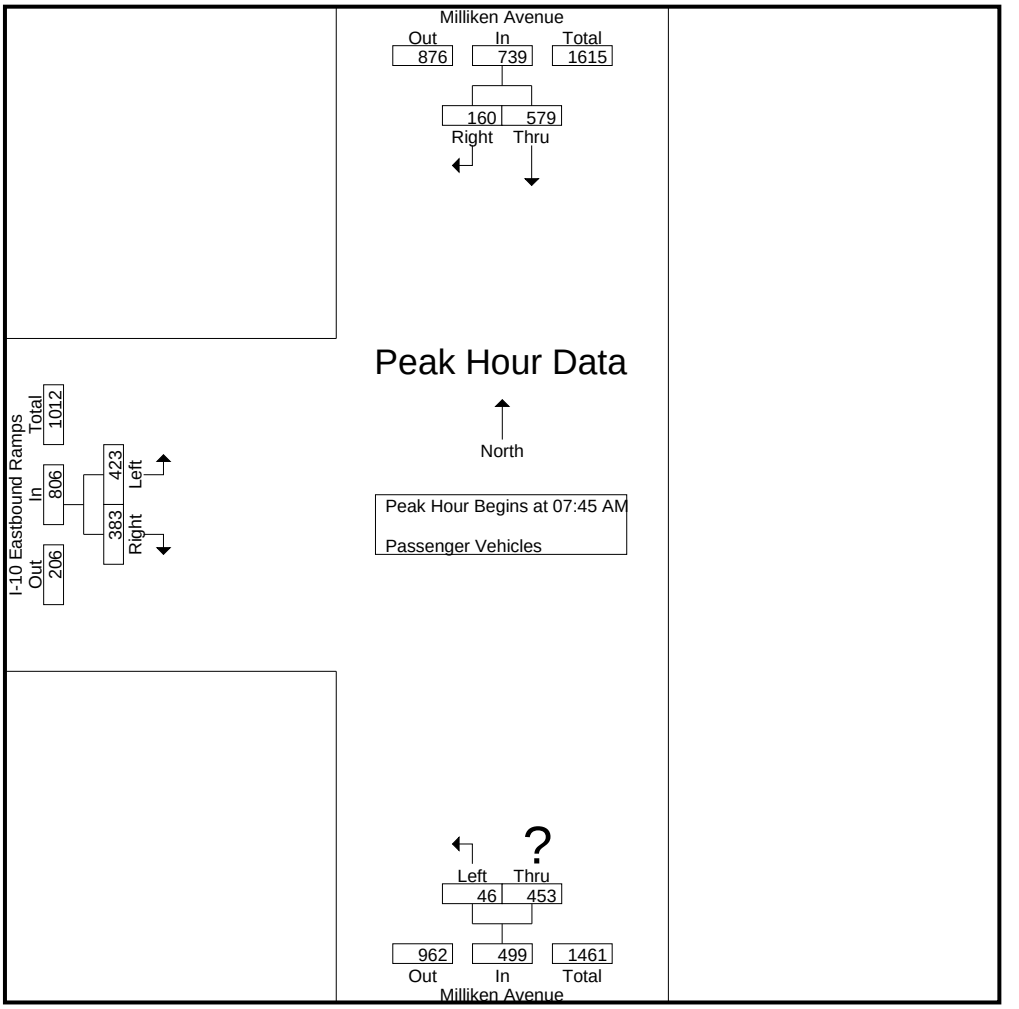

Peak Hour Analysis From 07:45 AM to 08:30 AM - Peak 1 of 1
Peak Hour for Each Approach Begins at:

	07:45 AM			07:45 AM			07:45 AM		
+0 mins.	**156**	**46**	**202**	8	121	129	**128**	105	**233**
+15 mins.	149	41	190	**17**	**130**	**147**	100	**106**	206
+30 mins.	148	34	182	8	92	100	101	100	201
+45 mins.	126	39	165	13	110	123	94	72	166
Total Volume	579	160	739	46	453	499	423	383	806
% App. Total	78.3	21.7		9.2	90.8		52.5	47.5	
PHF	.928	.870	.915	.676	.871	.849	.826	.903	.865

Counts Unlimited, Inc.
PO Box 1178
Corona, CA 92878
(951)268-6268

City of Ontario
N/S: Milliken Avenue
E/W: I-10 Eastbound Ramps
Weather: Clear

File Name : 14_ONT_Mil_10E AM
Site Code : 00322818
Start Date : 9/20/2022
Page No : 1

Groups Printed- Large 2 Axle Vehicles

	Milliken Avenue Southbound			Milliken Avenue Northbound			I-10 Eastbound Ramps Eastbound			
Start Time	Thru	Right	App. Total	Left	Thru	App. Total	Left	Right	App. Total	Int. Total
07:00 AM	3	1	4	2	5	7	2	3	5	16
07:15 AM	0	3	3	3	6	9	3	1	4	16
07:30 AM	4	2	6	3	5	8	4	2	6	20
07:45 AM	9	4	13	3	7	10	7	1	8	31
Total	16	10	26	11	23	34	16	7	23	83
08:00 AM	8	2	10	0	4	4	3	4	7	21
08:15 AM	3	2	5	0	2	2	3	5	8	15
08:30 AM	2	3	5	3	2	5	3	9	12	22
08:45 AM	8	4	12	0	6	6	8	6	14	32
Total	21	11	32	3	14	17	17	24	41	90
Grand Total	37	21	58	14	37	51	33	31	64	173
Apprch %	63.8	36.2		27.5	72.5		51.6	48.4		
Total %	21.4	12.1	33.5	8.1	21.4	29.5	19.1	17.9	37	

	Milliken Avenue Southbound			Milliken Avenue Northbound			I-10 Eastbound Ramps Eastbound			
Start Time	Thru	Right	App. Total	Left	Thru	App. Total	Left	Right	App. Total	Int. Total
Peak Hour Analysis From 07:45 AM to 08:30 AM - Peak 1 of 1										
Peak Hour for Entire Intersection Begins at 07:45 AM										
07:45 AM	**9**	**4**	**13**	**3**	**7**	**10**	**7**	1	8	**31**
08:00 AM	8	2	10	0	4	4	3	4	7	21
08:15 AM	3	2	5	0	2	2	3	5	8	15
08:30 AM	2	3	5	3	2	5	3	**9**	**12**	22
Total Volume	22	11	33	6	15	21	16	19	35	89
% App. Total	66.7	33.3		28.6	71.4		45.7	54.3		
PHF	.611	.688	.635	.500	.536	.525	.571	.528	.729	.718

Counts Unlimited, Inc.
PO Box 1178
Corona, CA 92878
(951)268-6268

City of Ontario
N/S: Milliken Avenue
E/W: I-10 Eastbound Ramps
Weather: Clear

File Name : 14_ONT_Mil_10E AM
Site Code : 00322818
Start Date : 9/20/2022
Page No : 2

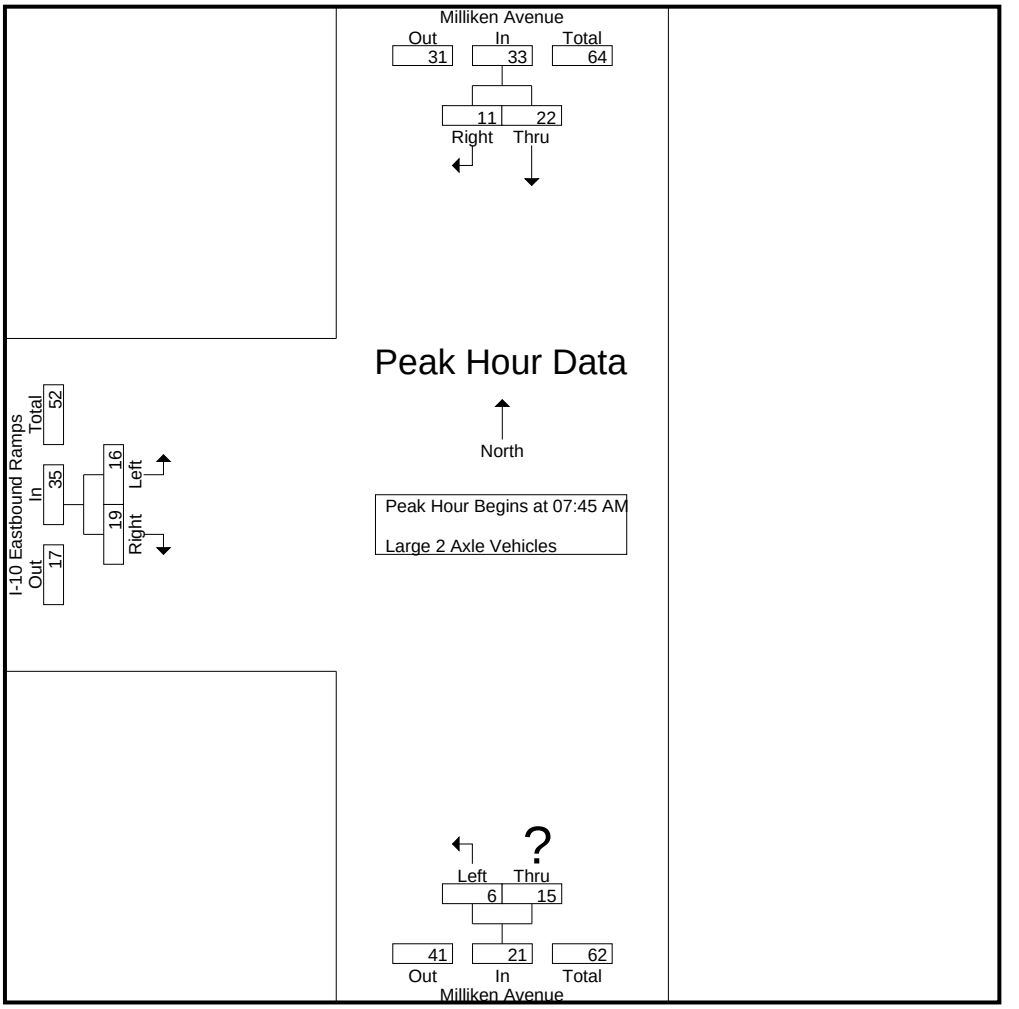

Peak Hour Analysis From 07:45 AM to 08:30 AM - Peak 1 of 1
Peak Hour for Each Approach Begins at:

	07:45 AM			07:45 AM			07:45 AM		
+0 mins.	**9**	**4**	**13**	**3**	**7**	**10**	**7**	1	8
+15 mins.	8	2	10	0	4	4	3	4	7
+30 mins.	3	2	5	0	2	2	3	5	8
+45 mins.	2	3	5	3	2	5	3	**9**	**12**
Total Volume	22	11	33	6	15	21	16	19	35
% App. Total	66.7	33.3		28.6	71.4		45.7	54.3	
PHF	.611	.688	.635	.500	.536	.525	.571	.528	.729

Counts Unlimited, Inc.
PO Box 1178
Corona, CA 92878
(951)268-6268

City of Ontario
N/S: Milliken Avenue
E/W: I-10 Eastbound Ramps
Weather: Clear

File Name : 14_ONT_Mil_10E AM
Site Code : 00322818
Start Date : 9/20/2022
Page No : 1

Groups Printed- 3 Axle Vehicles

	Milliken Avenue Southbound			Milliken Avenue Northbound			I-10 Eastbound Ramps Eastbound			
Start Time	Thru	Right	App. Total	Left	Thru	App. Total	Left	Right	App. Total	Int. Total
07:00 AM	5	1	6	0	1	1	1	2	3	10
07:15 AM	2	0	2	0	3	3	6	1	7	12
07:30 AM	3	0	3	1	2	3	3	3	6	12
07:45 AM	3	2	5	3	3	6	4	1	5	16
Total	13	3	16	4	9	13	14	7	21	50
08:00 AM	4	1	5	2	7	9	4	3	7	21
08:15 AM	0	1	1	5	6	11	7	1	8	20
08:30 AM	5	5	10	3	5	8	5	2	7	25
08:45 AM	5	0	5	5	3	8	8	2	10	23
Total	14	7	21	15	21	36	24	8	32	89
Grand Total	27	10	37	19	30	49	38	15	53	139
Apprch %	73	27		38.8	61.2		71.7	28.3		
Total %	19.4	7.2	26.6	13.7	21.6	35.3	27.3	10.8	38.1	

	Milliken Avenue Southbound			Milliken Avenue Northbound			I-10 Eastbound Ramps Eastbound			
Start Time	Thru	Right	App. Total	Left	Thru	App. Total	Left	Right	App. Total	Int. Total
Peak Hour Analysis From 07:45 AM to 08:30 AM - Peak 1 of 1										
Peak Hour for Entire Intersection Begins at 07:45 AM										
07:45 AM	3	2	5	3	3	6	4	1	5	16
08:00 AM	4	1	5	2	**7**	9	4	**3**	7	21
08:15 AM	0	1	1	**5**	6	**11**	**7**	1	**8**	20
08:30 AM	**5**	**5**	**10**	3	5	8	5	2	7	**25**
Total Volume	12	9	21	13	21	34	20	7	27	82
% App. Total	57.1	42.9		38.2	61.8		74.1	25.9		
PHF	.600	.450	.525	.650	.750	.773	.714	.583	.844	.820

Counts Unlimited, Inc.
PO Box 1178
Corona, CA 92878
(951)268-6268

City of Ontario
N/S: Milliken Avenue
E/W: I-10 Eastbound Ramps
Weather: Clear

File Name : 14_ONT_Mil_10E AM
Site Code : 00322818
Start Date : 9/20/2022
Page No : 2

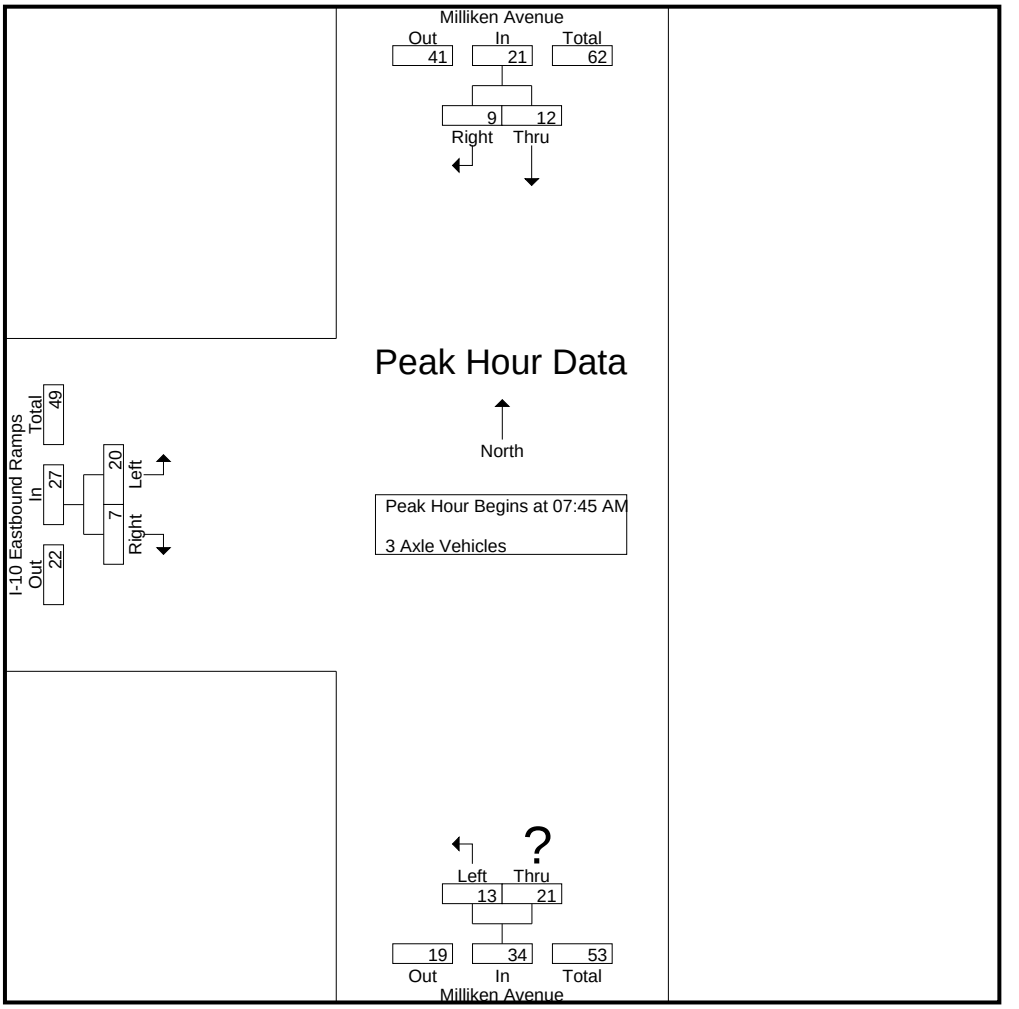

Peak Hour Analysis From 07:45 AM to 08:30 AM - Peak 1 of 1
Peak Hour for Each Approach Begins at:

	07:45 AM			07:45 AM			07:45 AM		
+0 mins.	3	2	5	3	3	6	4	1	5
+15 mins.	4	1	5	2	**7**	9	4	**3**	7
+30 mins.	0	1	1	**5**	6	**11**	**7**	1	**8**
+45 mins.	**5**	**5**	**10**	3	5	8	5	2	7
Total Volume	12	9	21	13	21	34	20	7	27
% App. Total	57.1	42.9		38.2	61.8		74.1	25.9	
PHF	.600	.450	.525	.650	.750	.773	.714	.583	.844

Counts Unlimited, Inc.
PO Box 1178
Corona, CA 92878
(951)268-6268

City of Ontario
N/S: Milliken Avenue
E/W: I-10 Eastbound Ramps
Weather: Clear

File Name : 14_ONT_Mil_10E AM
Site Code : 00322818
Start Date : 9/20/2022
Page No : 1

Groups Printed- 4+ Axle Trucks

	Milliken Avenue Southbound			Milliken Avenue Northbound			I-10 Eastbound Ramps Eastbound			
Start Time	Thru	Right	App. Total	Left	Thru	App. Total	Left	Right	App. Total	Int. Total
07:00 AM	21	3	24	18	42	60	2	12	14	98
07:15 AM	6	5	11	20	13	33	6	6	12	56
07:30 AM	14	2	16	16	26	42	4	10	14	72
07:45 AM	14	1	15	17	19	36	5	11	16	67
Total	55	11	66	71	100	171	17	39	56	293
08:00 AM	11	5	16	16	22	38	6	10	16	70
08:15 AM	11	2	13	15	27	42	9	18	27	82
08:30 AM	25	3	28	14	33	47	8	10	18	93
08:45 AM	28	3	31	15	32	47	4	19	23	101
Total	75	13	88	60	114	174	27	57	84	346
Grand Total	130	24	154	131	214	345	44	96	140	639
Apprch %	84.4	15.6		38	62		31.4	68.6		
Total %	20.3	3.8	24.1	20.5	33.5	54	6.9	15	21.9	

	Milliken Avenue Southbound			Milliken Avenue Northbound			I-10 Eastbound Ramps Eastbound			
Start Time	Thru	Right	App. Total	Left	Thru	App. Total	Left	Right	App. Total	Int. Total
Peak Hour Analysis From 07:45 AM to 08:30 AM - Peak 1 of 1										
Peak Hour for Entire Intersection Begins at 07:45 AM										
07:45 AM	14	1	15	**17**	19	36	5	11	16	67
08:00 AM	11	**5**	16	16	22	38	6	10	16	70
08:15 AM	11	2	13	15	27	42	**9**	**18**	**27**	82
08:30 AM	**25**	3	**28**	14	**33**	**47**	8	10	18	**93**
Total Volume	61	11	72	62	101	163	28	49	77	312
% App. Total	84.7	15.3		38	62		36.4	63.6		
PHF	.610	.550	.643	.912	.765	.867	.778	.681	.713	.839

Counts Unlimited, Inc.
PO Box 1178
Corona, CA 92878
(951)268-6268

City of Ontario
N/S: Milliken Avenue
E/W: I-10 Eastbound Ramps
Weather: Clear

File Name : 14_ONT_Mil_10E AM
Site Code : 00322818
Start Date : 9/20/2022
Page No : 2

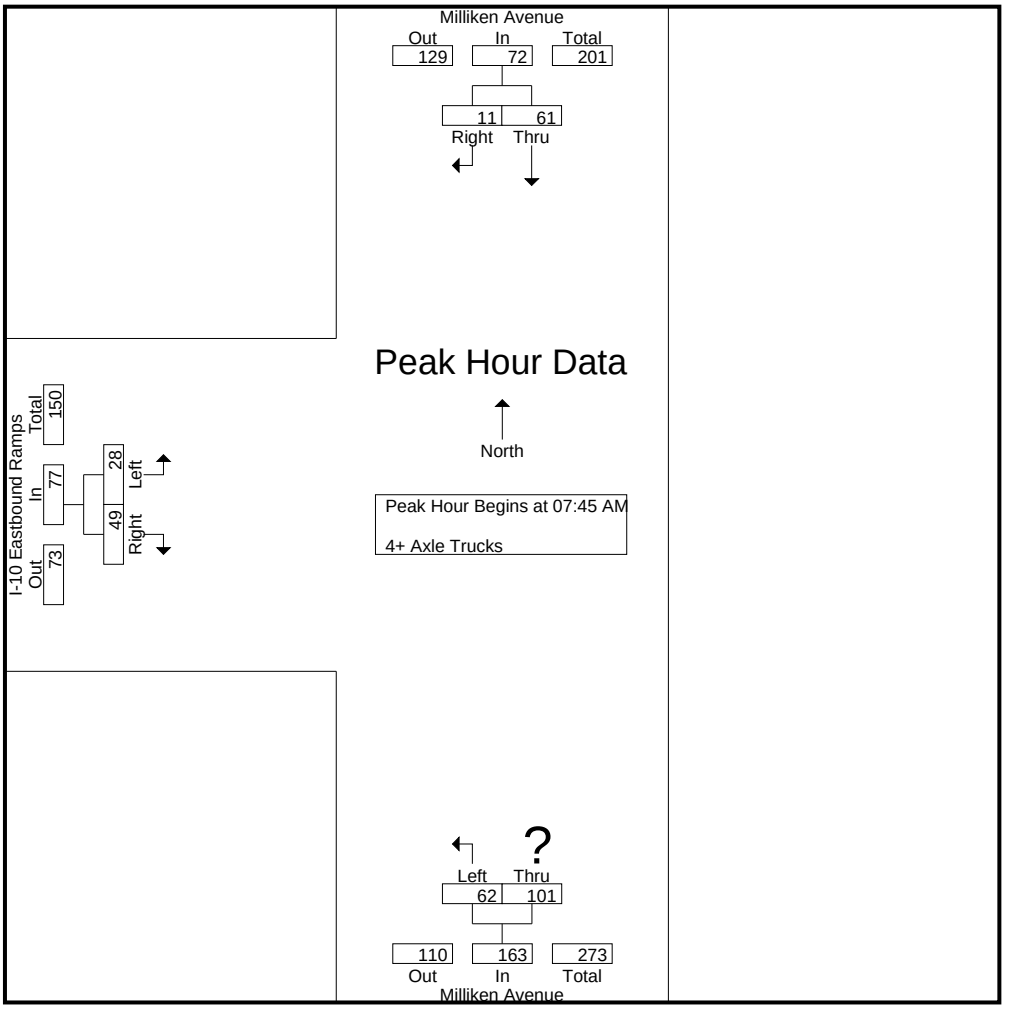

Peak Hour Analysis From 07:45 AM to 08:30 AM - Peak 1 of 1
Peak Hour for Each Approach Begins at:

	07:45 AM			07:45 AM			07:45 AM		
+0 mins.	14	1	15	**17**	19	36	5	11	16
+15 mins.	11	**5**	16	16	22	38	6	10	16
+30 mins.	11	2	13	15	27	42	**9**	**18**	**27**
+45 mins.	**25**	3	**28**	14	**33**	**47**	8	10	18
Total Volume	61	11	72	62	101	163	28	49	77
% App. Total	84.7	15.3		38	62		36.4	63.6	
PHF	.610	.550	.643	.912	.765	.867	.778	.681	.713

Counts Unlimited, Inc.
PO Box 1178
Corona, CA 92878
(951)268-6268

City of Ontario
N/S: Milliken Avenue
E/W: I-10 Eastbound Ramps
Weather: Clear

File Name : 14_ONT_Mil_10E PM
Site Code : 00322818
Start Date : 9/20/2022
Page No : 1

Groups Printed- Passenger Vehicles - Large 2 Axle Vehicles - 3 Axle Vehicles - 4+ Axle Trucks

	Milliken Avenue Southbound			Milliken Avenue Northbound			I-10 Eastbound Ramps Eastbound			
Start Time	Thru	Right	App. Total	Left	Thru	App. Total	Left	Right	App. Total	Int. Total
04:00 PM	203	123	326	93	276	369	49	37	86	781
04:15 PM	164	102	266	66	212	278	47	23	70	614
04:30 PM	188	102	290	90	250	340	70	36	106	736
04:45 PM	186	118	304	65	245	310	66	35	101	715
Total	741	445	1186	314	983	1297	232	131	363	2846
05:00 PM	204	116	320	105	246	351	69	47	116	787
05:15 PM	201	128	329	61	250	311	51	31	82	722
05:30 PM	180	99	279	76	260	336	65	28	93	708
05:45 PM	148	102	250	49	218	267	76	47	123	640
Total	733	445	1178	291	974	1265	261	153	414	2857
Grand Total	1474	890	2364	605	1957	2562	493	284	777	5703
Apprch %	62.4	37.6		23.6	76.4		63.4	36.6		
Total %	25.8	15.6	41.5	10.6	34.3	44.9	8.6	5	13.6	
Passenger Vehicles	1203	867	2070	462	1802	2264	456	135	591	4925
% Passenger Vehicles	81.6	97.4	87.6	76.4	92.1	88.4	92.5	47.5	76.1	86.4
Large 2 Axle Vehicles	42	13	55	8	28	36	17	13	30	121
% Large 2 Axle Vehicles	2.8	1.5	2.3	1.3	1.4	1.4	3.4	4.6	3.9	2.1
3 Axle Vehicles	57	3	60	21	31	52	3	7	10	122
% 3 Axle Vehicles	3.9	0.3	2.5	3.5	1.6	2	0.6	2.5	1.3	2.1
4+ Axle Trucks	172	7	179	114	96	210	17	129	146	535
% 4+ Axle Trucks	11.7	0.8	7.6	18.8	4.9	8.2	3.4	45.4	18.8	9.4

	Milliken Avenue Southbound			Milliken Avenue Northbound			I-10 Eastbound Ramps Eastbound			
Start Time	Thru	Right	App. Total	Left	Thru	App. Total	Left	Right	App. Total	Int. Total
Peak Hour Analysis From 04:00 PM to 05:45 PM - Peak 1 of 1										
Peak Hour for Entire Intersection Begins at 04:30 PM										
04:30 PM	188	102	290	90	**250**	340	**70**	36	106	736
04:45 PM	186	118	304	65	245	310	66	35	101	715
05:00 PM	**204**	116	320	**105**	246	**351**	69	**47**	**116**	**787**
05:15 PM	201	**128**	**329**	61	250	311	51	31	82	722
Total Volume	779	464	1243	321	991	1312	256	149	405	2960
% App. Total	62.7	37.3		24.5	75.5		63.2	36.8		
PHF	.955	.906	.945	.764	.991	.934	.914	.793	.873	.940

Counts Unlimited, Inc.
PO Box 1178
Corona, CA 92878
(951)268-6268

City of Ontario
N/S: Milliken Avenue
E/W: I-10 Eastbound Ramps
Weather: Clear

File Name : 14_ONT_Mil_10E PM
Site Code : 00322818
Start Date : 9/20/2022
Page No : 2

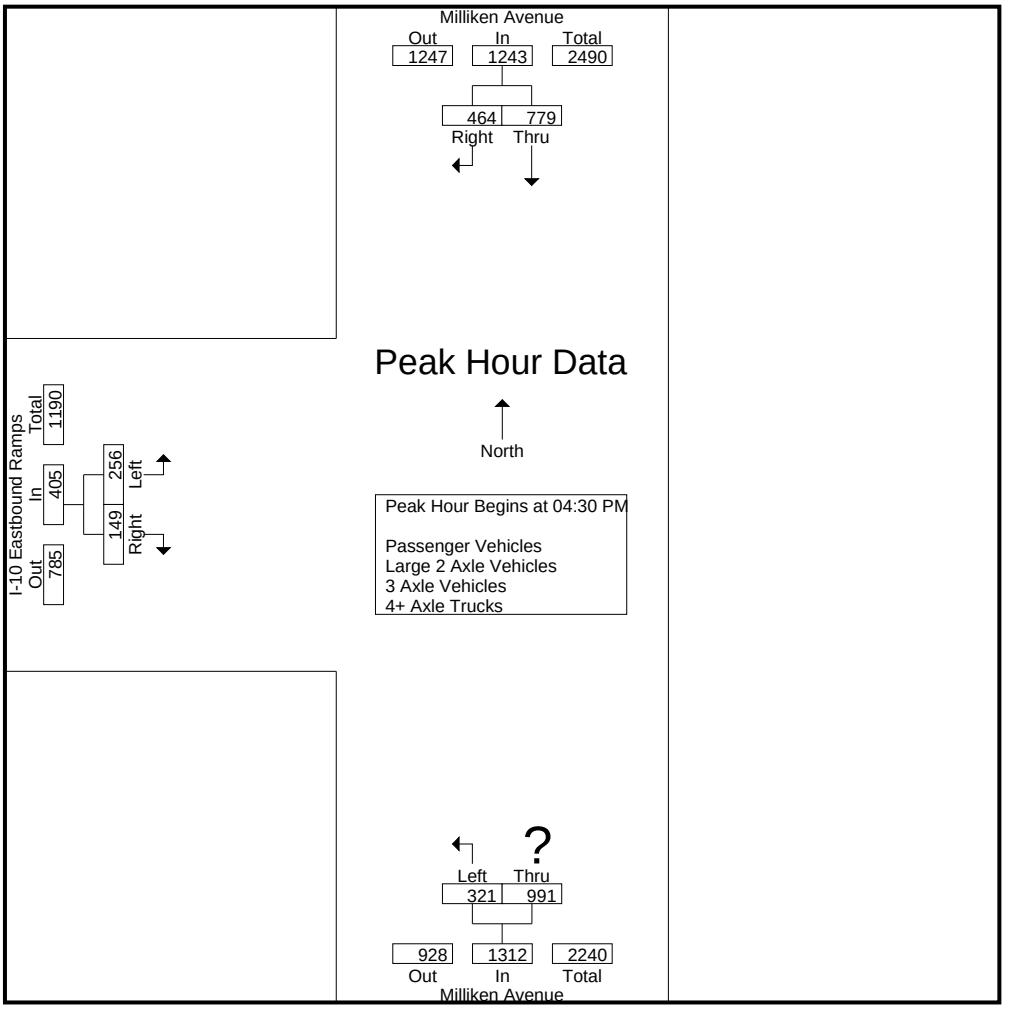

Peak Hour Analysis From 04:00 PM to 05:45 PM - Peak 1 of 1
Peak Hour for Each Approach Begins at:

	04:30 PM			04:30 PM			05:00 PM		
+0 mins.	188	102	290	90	**250**	340	69	**47**	116
+15 mins.	186	118	304	65	245	310	51	31	82
+30 mins.	**204**	116	320	**105**	246	**351**	65	28	93
+45 mins.	201	**128**	**329**	61	250	311	**76**	47	**123**
Total Volume	779	464	1243	321	991	1312	261	153	414
% App. Total	62.7	37.3		24.5	75.5		63	37	
PHF	.955	.906	.945	.764	.991	.934	.859	.814	.841

Counts Unlimited, Inc.
PO Box 1178
Corona, CA 92878
(951)268-6268

City of Ontario
N/S: Milliken Avenue
E/W: I-10 Eastbound Ramps
Weather: Clear

File Name : 14_ONT_Mil_10E PM
Site Code : 00322818
Start Date : 9/20/2022
Page No : 1

Groups Printed- Passenger Vehicles

	Milliken Avenue Southbound			Milliken Avenue Northbound			I-10 Eastbound Ramps Eastbound			
Start Time	Thru	Right	App. Total	Left	Thru	App. Total	Left	Right	App. Total	Int. Total
04:00 PM	165	121	286	80	250	330	47	22	69	685
04:15 PM	129	101	230	42	191	233	39	12	51	514
04:30 PM	154	100	254	65	230	295	62	19	81	630
04:45 PM	150	114	264	50	225	275	61	17	78	617
Total	598	436	1034	237	896	1133	209	70	279	2446
05:00 PM	169	115	284	84	231	315	67	18	85	684
05:15 PM	163	123	286	47	234	281	49	12	61	628
05:30 PM	149	96	245	60	241	301	61	10	71	617
05:45 PM	124	97	221	34	200	234	70	25	95	550
Total	605	431	1036	225	906	1131	247	65	312	2479
Grand Total	1203	867	2070	462	1802	2264	456	135	591	4925
Apprch %	58.1	41.9		20.4	79.6		77.2	22.8		
Total %	24.4	17.6	42	9.4	36.6	46	9.3	2.7	12	

	Milliken Avenue Southbound			Milliken Avenue Northbound			I-10 Eastbound Ramps Eastbound			
Start Time	Thru	Right	App. Total	Left	Thru	App. Total	Left	Right	App. Total	Int. Total
Peak Hour Analysis From 04:30 PM to 05:15 PM - Peak 1 of 1										
Peak Hour for Entire Intersection Begins at 04:30 PM										
04:30 PM	154	100	254	65	230	295	62	**19**	81	630
04:45 PM	150	114	264	50	225	275	61	17	78	617
05:00 PM	**169**	115	284	**84**	231	**315**	**67**	18	**85**	**684**
05:15 PM	163	**123**	**286**	47	**234**	281	49	12	61	628
Total Volume	636	452	1088	246	920	1166	239	66	305	2559
% App. Total	58.5	41.5		21.1	78.9		78.4	21.6		
PHF	.941	.919	.951	.732	.983	.925	.892	.868	.897	.935

Counts Unlimited, Inc.
PO Box 1178
Corona, CA 92878
(951)268-6268

City of Ontario
N/S: Milliken Avenue
E/W: I-10 Eastbound Ramps
Weather: Clear

File Name : 14_ONT_Mil_10E PM
Site Code : 00322818
Start Date : 9/20/2022
Page No : 2

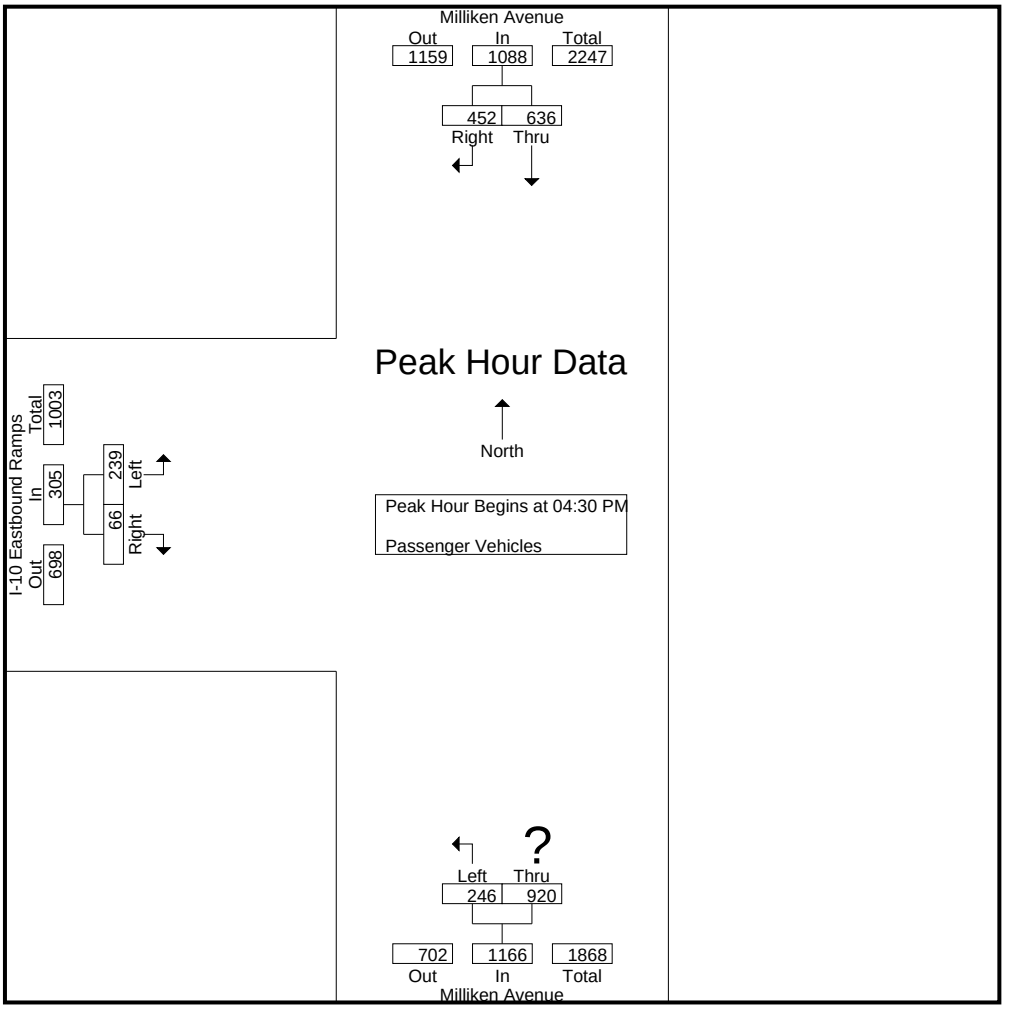

Peak Hour Analysis From 04:30 PM to 05:15 PM - Peak 1 of 1
Peak Hour for Each Approach Begins at:

	04:30 PM			04:30 PM			04:30 PM		
+0 mins.	154	100	254	65	230	295	62	**19**	81
+15 mins.	150	114	264	50	225	275	61	17	78
+30 mins.	**169**	115	284	**84**	231	**315**	**67**	18	**85**
+45 mins.	163	**123**	**286**	47	**234**	281	49	12	61
Total Volume	636	452	1088	246	920	1166	239	66	305
% App. Total	58.5	41.5		21.1	78.9		78.4	21.6	
PHF	.941	.919	.951	.732	.983	.925	.892	.868	.897

Counts Unlimited, Inc.
PO Box 1178
Corona, CA 92878
(951)268-6268

City of Ontario
N/S: Milliken Avenue
E/W: I-10 Eastbound Ramps
Weather: Clear

File Name : 14_ONT_Mil_10E PM
Site Code : 00322818
Start Date : 9/20/2022
Page No : 1

Groups Printed- Large 2 Axle Vehicles

	Milliken Avenue Southbound			Milliken Avenue Northbound			I-10 Eastbound Ramps Eastbound			
Start Time	Thru	Right	App. Total	Left	Thru	App. Total	Left	Right	App. Total	Int. Total
04:00 PM	9	1	10	1	7	8	1	5	6	24
04:15 PM	3	1	4	1	2	3	2	1	3	10
04:30 PM	8	0	8	3	5	8	5	0	5	21
04:45 PM	3	4	7	0	7	7	1	2	3	17
Total	23	6	29	5	21	26	9	8	17	72
05:00 PM	5	1	6	1	1	2	1	2	3	11
05:15 PM	4	3	7	0	4	4	1	1	2	13
05:30 PM	6	2	8	1	0	1	3	1	4	13
05:45 PM	4	1	5	1	2	3	3	1	4	12
Total	19	7	26	3	7	10	8	5	13	49
Grand Total	42	13	55	8	28	36	17	13	30	121
Apprch %	76.4	23.6		22.2	77.8		56.7	43.3		
Total %	34.7	10.7	45.5	6.6	23.1	29.8	14	10.7	24.8	

	Milliken Avenue Southbound			Milliken Avenue Northbound			I-10 Eastbound Ramps Eastbound			
Start Time	Thru	Right	App. Total	Left	Thru	App. Total	Left	Right	App. Total	Int. Total
Peak Hour Analysis From 04:30 PM to 05:15 PM - Peak 1 of 1										
Peak Hour for Entire Intersection Begins at 04:30 PM										
04:30 PM	**8**	0	**8**	**3**	5	**8**	**5**	0	**5**	**21**
04:45 PM	3	**4**	7	0	**7**	7	1	**2**	3	17
05:00 PM	5	1	6	1	1	2	1	2	3	11
05:15 PM	4	3	7	0	4	4	1	1	2	13
Total Volume	20	8	28	4	17	21	8	5	13	62
% App. Total	71.4	28.6		19	81		61.5	38.5		
PHF	.625	.500	.875	.333	.607	.656	.400	.625	.650	.738

Counts Unlimited, Inc.
PO Box 1178
Corona, CA 92878
(951)268-6268

City of Ontario
N/S: Milliken Avenue
E/W: I-10 Eastbound Ramps
Weather: Clear

File Name : 14_ONT_Mil_10E PM
Site Code : 00322818
Start Date : 9/20/2022
Page No : 2

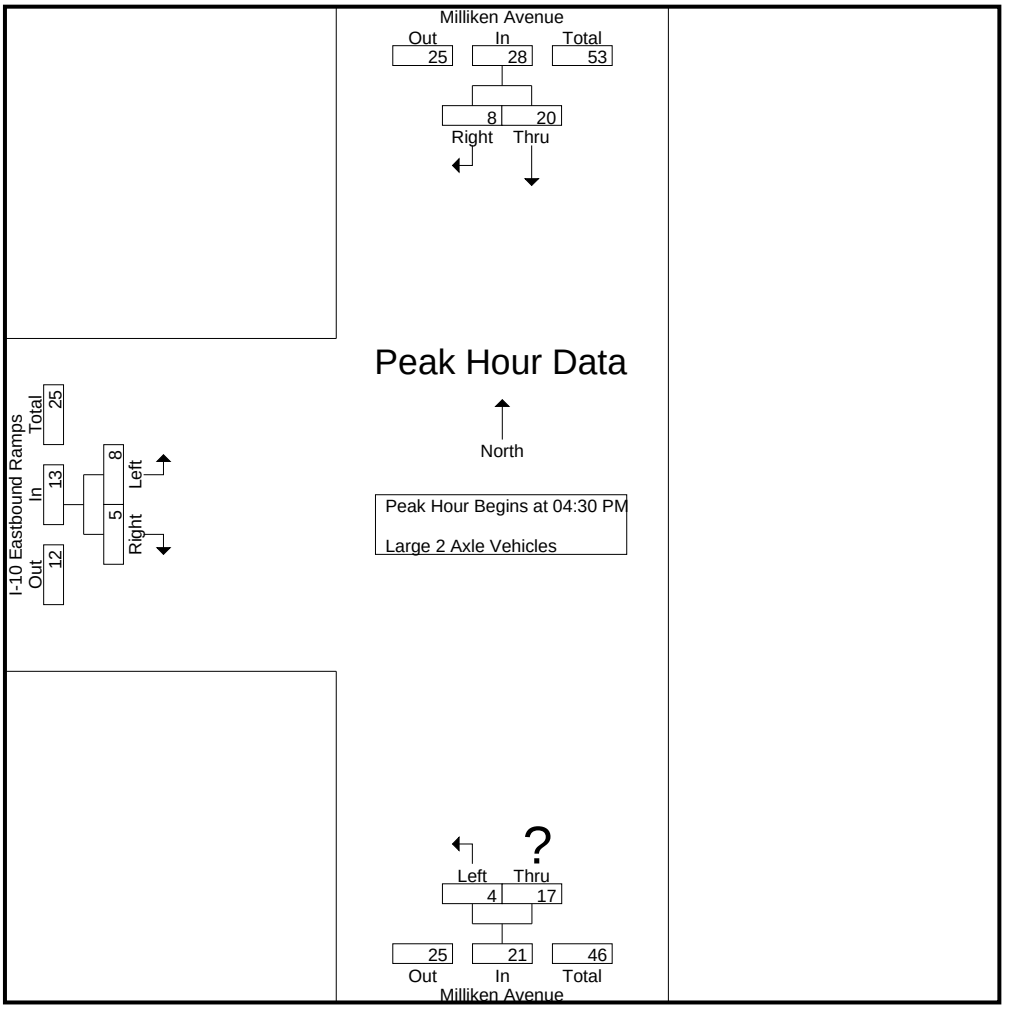

Peak Hour Analysis From 04:30 PM to 05:15 PM - Peak 1 of 1
Peak Hour for Each Approach Begins at:

	04:30 PM			04:30 PM			04:30 PM		
+0 mins.	**8**	0	**8**	**3**	5	**8**	**5**	0	**5**
+15 mins.	3	**4**	7	0	**7**	7	1	**2**	3
+30 mins.	5	1	6	1	1	2	1	2	3
+45 mins.	4	3	7	0	4	4	1	1	2
Total Volume	20	8	28	4	17	21	8	5	13
% App. Total	71.4	28.6		19	81		61.5	38.5	
PHF	.625	.500	.875	.333	.607	.656	.400	.625	.650

Counts Unlimited, Inc.
PO Box 1178
Corona, CA 92878
(951)268-6268

City of Ontario
N/S: Milliken Avenue
E/W: I-10 Eastbound Ramps
Weather: Clear

File Name : 14_ONT_Mil_10E PM
Site Code : 00322818
Start Date : 9/20/2022
Page No : 1

Groups Printed- 3 Axle Vehicles

	Milliken Avenue Southbound			Milliken Avenue Northbound			I-10 Eastbound Ramps Eastbound			
Start Time	Thru	Right	App. Total	Left	Thru	App. Total	Left	Right	App. Total	Int. Total
04:00 PM	7	1	8	3	5	8	1	2	3	19
04:15 PM	7	0	7	2	4	6	0	1	1	14
04:30 PM	3	0	3	5	1	6	0	0	0	9
04:45 PM	9	0	9	2	5	7	1	0	1	17
Total	26	1	27	12	15	27	2	3	5	59
05:00 PM	10	0	10	2	4	6	1	1	2	18
05:15 PM	8	1	9	3	4	7	0	0	0	16
05:30 PM	10	0	10	0	4	4	0	1	1	15
05:45 PM	3	1	4	4	4	8	0	2	2	14
Total	31	2	33	9	16	25	1	4	5	63
Grand Total	57	3	60	21	31	52	3	7	10	122
Apprch %	95	5		40.4	59.6		30	70		
Total %	46.7	2.5	49.2	17.2	25.4	42.6	2.5	5.7	8.2	

	Milliken Avenue Southbound			Milliken Avenue Northbound			I-10 Eastbound Ramps Eastbound			
Start Time	Thru	Right	App. Total	Left	Thru	App. Total	Left	Right	App. Total	Int. Total
Peak Hour Analysis From 04:30 PM to 05:15 PM - Peak 1 of 1										
Peak Hour for Entire Intersection Begins at 04:30 PM										
04:30 PM	3	0	3	**5**	1	6	0	0	0	9
04:45 PM	9	0	9	2	**5**	**7**	**1**	0	1	17
05:00 PM	**10**	0	**10**	2	4	6	1	**1**	**2**	**18**
05:15 PM	8	**1**	9	3	4	7	0	0	0	16
Total Volume	30	1	31	12	14	26	2	1	3	60
% App. Total	96.8	3.2		46.2	53.8		66.7	33.3		
PHF	.750	.250	.775	.600	.700	.929	.500	.250	.375	.833

Counts Unlimited, Inc.
PO Box 1178
Corona, CA 92878
(951)268-6268

City of Ontario
N/S: Milliken Avenue
E/W: I-10 Eastbound Ramps
Weather: Clear

File Name : 14_ONT_Mil_10E PM
Site Code : 00322818
Start Date : 9/20/2022
Page No : 2

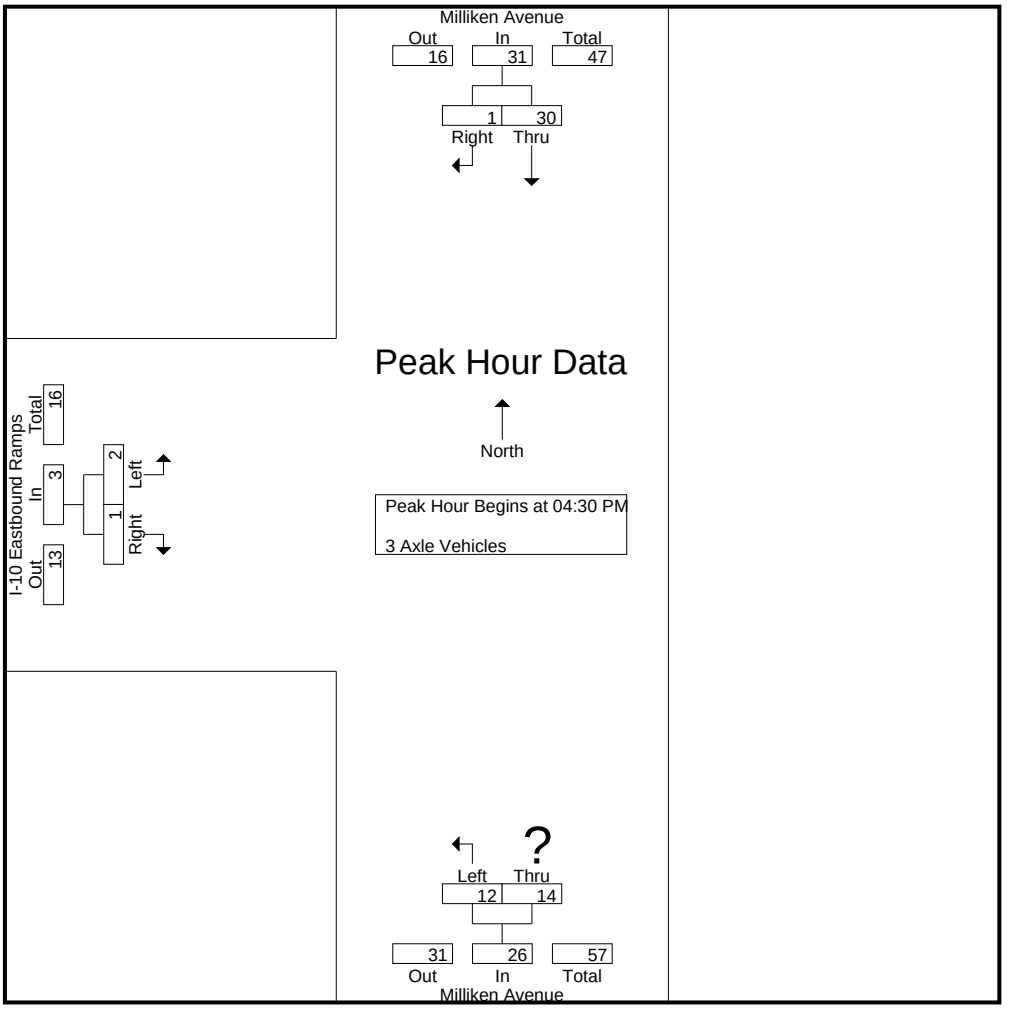

Peak Hour Analysis From 04:30 PM to 05:15 PM - Peak 1 of 1
Peak Hour for Each Approach Begins at:

	04:30 PM			04:30 PM			04:30 PM		
+0 mins.	3	0	3	**5**	1	6	0	0	0
+15 mins.	9	0	9	2	**5**	**7**	**1**	0	1
+30 mins.	**10**	0	**10**	2	4	6	1	**1**	**2**
+45 mins.	8	**1**	9	3	4	7	0	0	0
Total Volume	30	1	31	12	14	26	2	1	3
% App. Total	96.8	3.2		46.2	53.8		66.7	33.3	
PHF	.750	.250	.775	.600	.700	.929	.500	.250	.375

Counts Unlimited, Inc.
PO Box 1178
Corona, CA 92878
(951)268-6268

City of Ontario
N/S: Milliken Avenue
E/W: I-10 Eastbound Ramps
Weather: Clear

File Name : 14_ONT_Mil_10E PM
Site Code : 00322818
Start Date : 9/20/2022
Page No : 1

Groups Printed- 4+ Axle Trucks

	Milliken Avenue Southbound			Milliken Avenue Northbound			I-10 Eastbound Ramps Eastbound			
Start Time	Thru	Right	App. Total	Left	Thru	App. Total	Left	Right	App. Total	Int. Total
04:00 PM	22	0	22	9	14	23	0	8	8	53
04:15 PM	25	0	25	21	15	36	6	9	15	76
04:30 PM	23	2	25	17	14	31	3	17	20	76
04:45 PM	24	0	24	13	8	21	3	16	19	64
Total	94	2	96	60	51	111	12	50	62	269
05:00 PM	20	0	20	18	10	28	0	26	26	74
05:15 PM	26	1	27	11	8	19	1	18	19	65
05:30 PM	15	1	16	15	15	30	1	16	17	63
05:45 PM	17	3	20	10	12	22	3	19	22	64
Total	78	5	83	54	45	99	5	79	84	266
Grand Total	172	7	179	114	96	210	17	129	146	535
Apprch %	96.1	3.9		54.3	45.7		11.6	88.4		
Total %	32.1	1.3	33.5	21.3	17.9	39.3	3.2	24.1	27.3	

	Milliken Avenue Southbound			Milliken Avenue Northbound			I-10 Eastbound Ramps Eastbound			
Start Time	Thru	Right	App. Total	Left	Thru	App. Total	Left	Right	App. Total	Int. Total
Peak Hour Analysis From 04:30 PM to 05:15 PM - Peak 1 of 1										
Peak Hour for Entire Intersection Begins at 04:30 PM										
04:30 PM	23	**2**	25	17	**14**	**31**	**3**	17	20	**76**
04:45 PM	24	0	24	13	8	21	3	16	19	64
05:00 PM	20	0	20	**18**	10	28	0	**26**	**26**	74
05:15 PM	**26**	1	**27**	11	8	19	1	18	19	65
Total Volume	93	3	96	59	40	99	7	77	84	279
% App. Total	96.9	3.1		59.6	40.4		8.3	91.7		
PHF	.894	.375	.889	.819	.714	.798	.583	.740	.808	.918

Counts Unlimited, Inc.
PO Box 1178
Corona, CA 92878
(951)268-6268

City of Ontario
N/S: Milliken Avenue
E/W: I-10 Eastbound Ramps
Weather: Clear

File Name : 14_ONT_Mil_10E PM
Site Code : 00322818
Start Date : 9/20/2022
Page No : 2

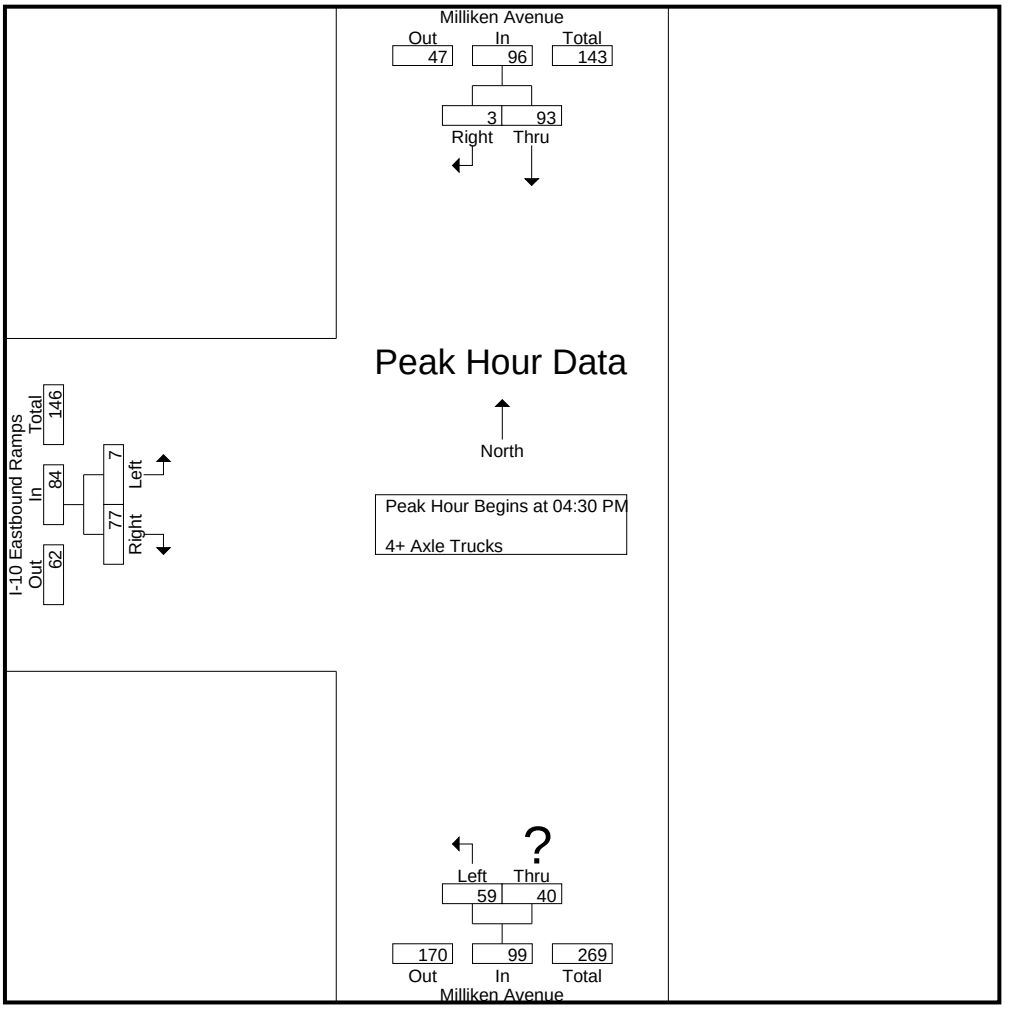

Peak Hour Analysis From 04:30 PM to 05:15 PM - Peak 1 of 1
Peak Hour for Each Approach Begins at:

	04:30 PM			04:30 PM			04:30 PM		
+0 mins.	23	**2**	25	17	**14**	**31**	**3**	17	20
+15 mins.	24	0	24	13	8	21	3	16	19
+30 mins.	20	0	20	**18**	10	28	0	**26**	**26**
+45 mins.	**26**	1	**27**	11	8	19	1	18	19
Total Volume	93	3	96	59	40	99	7	77	84
% App. Total	96.9	3.1		59.6	40.4		8.3	91.7	
PHF	.894	.375	.889	.819	.714	.798	.583	.740	.808

Location: Ontario
N/S: Milliken Avenue
E/W: I-10 EB Ramps

Date: 9/20/2022
Day: Tuesday

PEDESTRIANS

	North Leg Milliken Avenue	East Leg Dead End	South Leg Milliken Avenue	West Leg I-10 EB Ramps	
	Pedestrians	Pedestrians	Pedestrians	Pedestrians	
7:00 AM	0	0	0	0	0
7:15 AM	0	0	0	0	0
7:30 AM	0	0	0	0	0
7:45 AM	0	0	0	0	0
8:00 AM	0	0	0	0	0
8:15 AM	0	0	0	1	1
8:30 AM	0	0	0	0	0
8:45 AM	0	0	0	0	0
TOTAL VOLUMES:	0	0	0	1	1

	North Leg Milliken Avenue	East Leg Dead End	South Leg Milliken Avenue	West Leg I-10 EB Ramps	
	Pedestrians	Pedestrians	Pedestrians	Pedestrians	
4:00 PM	0	0	0	0	0
4:15 PM	0	0	0	0	0
4:30 PM	0	0	0	0	0
4:45 PM	0	0	0	0	0
5:00 PM	0	0	0	0	0
5:15 PM	0	0	0	0	0
5:30 PM	0	0	0	0	0
5:45 PM	0	0	0	0	0
TOTAL VOLUMES:	0	0	0	0	0

Counts Unlimited, Inc.
PO Box 1178
Corona, CA 92878
951-268-6268

Location: Ontario
N/S: Milliken Avenue
E/W: I-10 EB Ramps

Date: 9/20/2022
Day: Tuesday

BICYCLES

	Southbound Milliken Avenue			Westbound Dead End			Northbound Milliken Avenue			Eastbound I-10 EB Ramps			
	Left	Thru	Right	Left	Thru	Right	Left	Thru	Right	Left	Thru	Right	
7:00 AM	0	0	0	0	0	0	0	0	0	0	0	0	0
7:15 AM	0	0	0	0	0	0	0	0	0	0	0	0	0
7:30 AM	0	0	0	0	0	0	0	0	0	0	0	0	0
7:45 AM	0	0	0	0	0	0	0	0	0	0	0	0	0
8:00 AM	0	0	0	0	0	0	0	0	0	0	0	0	0
8:15 AM	0	2	0	0	0	0	0	0	0	0	0	0	2
8:30 AM	0	1	0	0	0	0	0	0	0	0	0	0	1
8:45 AM	0	1	0	0	0	0	0	0	0	0	0	0	1
TOTAL VOLUMES:	0	4	0	0	0	0	0	0	0	0	0	0	4

	Southbound Milliken Avenue			Westbound Dead End			Northbound Milliken Avenue			Eastbound I-10 EB Ramps			
	Left	Thru	Right	Left	Thru	Right	Left	Thru	Right	Left	Thru	Right	
4:00 PM	0	0	0	0	0	0	0	2	0	0	0	0	2
4:15 PM	0	0	0	0	0	0	0	1	0	0	0	0	1
4:30 PM	0	0	0	0	0	0	0	0	0	0	0	0	0
4:45 PM	0	0	0	0	0	0	0	0	0	0	0	0	0
5:00 PM	0	1	0	0	0	0	0	0	0	0	0	0	1
5:15 PM	0	0	0	0	0	0	0	0	0	0	0	0	0
5:30 PM	0	0	0	0	0	0	0	0	0	0	0	0	0
5:45 PM	0	0	0	0	0	0	0	1	0	0	0	0	1
TOTAL VOLUMES:	0	1	0	0	0	0	0	4	0	0	0	0	5

Counts Unlimited, Inc.
PO Box 1178
Corona, CA 92878
951-268-6268

Counts Unlimited, Inc.
PO Box 1178
Corona, CA 92878
(951)268-6268

City of Ontario
N/S: Milliken Avenue
E/W: Guasti Road
Weather: Clear

File Name : 15_ONT_Mil_Gua AM
Site Code : 00322818
Start Date : 9/20/2022
Page No : 1

Groups Printed- Passenger Vehicles - Large 2 Axle Vehicles - 3 Axle Vehicles - 4+ Axle Trucks

	Milliken Avenue Southbound				Guasti Road Westbound				Milliken Avenue Northbound				Guasti Road Eastbound				
Start Time	Left	Thru	Right	App. Total	Left	Thru	Right	App. Total	Left	Thru	Right	App. Total	Left	Thru	Right	App. Total	Int. Total
07:00 AM	19	156	42	217	9	0	28	37	13	83	10	106	34	0	18	52	412
07:15 AM	18	126	24	168	7	1	24	32	21	86	8	115	26	1	26	53	368
07:30 AM	20	182	41	243	6	1	25	32	22	101	9	132	35	0	17	52	459
07:45 AM	26	206	60	292	3	3	19	25	21	137	14	172	34	1	22	57	546
Total	83	670	167	920	25	5	96	126	77	407	41	525	129	2	83	214	1785
08:00 AM	18	211	56	285	9	2	24	35	29	146	12	187	26	1	32	59	566
08:15 AM	19	224	43	286	10	2	27	39	29	107	11	147	31	2	11	44	516
08:30 AM	14	188	46	248	12	5	23	40	37	139	13	189	29	2	26	57	534
08:45 AM	25	203	73	301	8	3	22	33	24	122	23	169	32	2	23	57	560
Total	76	826	218	1120	39	12	96	147	119	514	59	692	118	7	92	217	2176
Grand Total	159	1496	385	2040	64	17	192	273	196	921	100	1217	247	9	175	431	3961
Apprch %	7.8	73.3	18.9		23.4	6.2	70.3		16.1	75.7	8.2		57.3	2.1	40.6		
Total %	4	37.8	9.7	51.5	1.6	0.4	4.8	6.9	4.9	23.3	2.5	30.7	6.2	0.2	4.4	10.9	
Passenger Vehicles	98	1347	271	1716	23	9	33	65	142	775	49	966	73	3	96	172	2919
% Passenger Vehicles	61.6	90	70.4	84.1	35.9	52.9	17.2	23.8	72.4	84.1	49	79.4	29.6	33.3	54.9	39.9	73.7
Large 2 Axle Vehicles	3	38	17	58	0	0	6	6	13	32	5	50	17	1	17	35	149
% Large 2 Axle Vehicles	1.9	2.5	4.4	2.8	0	0	3.1	2.2	6.6	3.5	5	4.1	6.9	11.1	9.7	8.1	3.8
3 Axle Vehicles	9	25	13	47	11	5	18	34	15	18	6	39	18	1	14	33	153
% 3 Axle Vehicles	5.7	1.7	3.4	2.3	17.2	29.4	9.4	12.5	7.7	2	6	3.2	7.3	11.1	8	7.7	3.9
4+ Axle Trucks	49	86	84	219	30	3	135	168	26	96	40	162	139	4	48	191	740
% 4+ Axle Trucks	30.8	5.7	21.8	10.7	46.9	17.6	70.3	61.5	13.3	10.4	40	13.3	56.3	44.4	27.4	44.3	18.7

	Milliken Avenue Southbound				Guasti Road Westbound				Milliken Avenue Northbound				Guasti Road Eastbound				
Start Time	Left	Thru	Right	App. Total	Left	Thru	Right	App. Total	Left	Thru	Right	App. Total	Left	Thru	Right	App. Total	Int. Total
Peak Hour Analysis From 07:00 AM to 08:45 AM - Peak 1 of 1																	
Peak Hour for Entire Intersection Begins at 08:00 AM																	
08:00 AM	18	211	56	285	9	2	24	35	29	**146**	12	187	26	1	**32**	**59**	**566**
08:15 AM	19	**224**	43	286	10	2	**27**	39	29	107	11	147	31	**2**	11	44	516
08:30 AM	14	188	46	248	**12**	**5**	23	**40**	**37**	139	13	**189**	29	2	26	57	534
08:45 AM	**25**	203	**73**	**301**	8	3	22	33	24	122	**23**	169	**32**	2	23	57	560
Total Volume	76	826	218	1120	39	12	96	147	119	514	59	692	118	7	92	217	2176
% App. Total	6.8	73.8	19.5		26.5	8.2	65.3		17.2	74.3	8.5		54.4	3.2	42.4		
PHF	.760	.922	.747	.930	.813	.600	.889	.919	.804	.880	.641	.915	.922	.875	.719	.919	.961

Counts Unlimited, Inc.
PO Box 1178
Corona, CA 92878
(951)268-6268

City of Ontario
N/S: Milliken Avenue
E/W: Guasti Road
Weather: Clear

File Name : 15_ONT_Mil_Gua AM
Site Code : 00322818
Start Date : 9/20/2022
Page No : 2

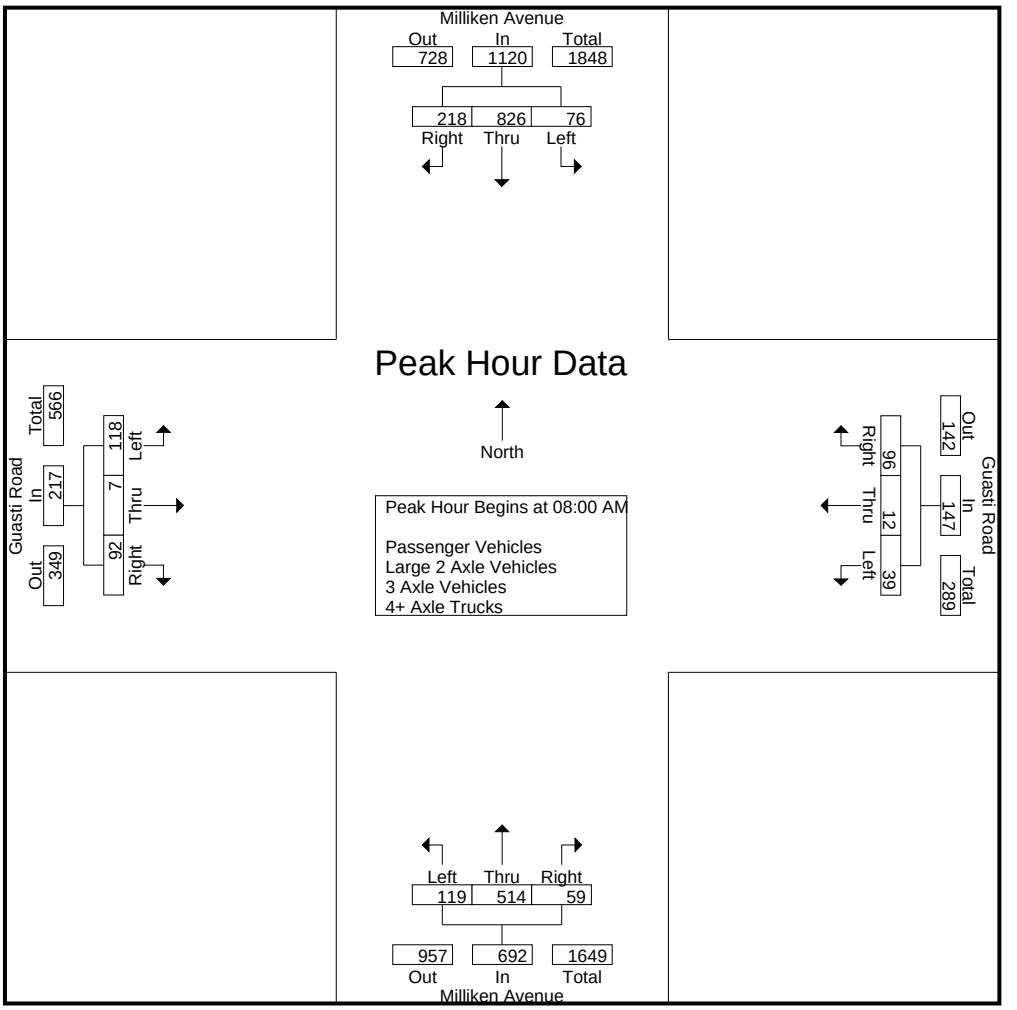

Peak Hour Analysis From 07:00 AM to 08:45 AM - Peak 1 of 1
Peak Hour for Each Approach Begins at:

	08:00 AM				08:00 AM				07:45 AM				07:15 AM			
+0 mins.	18	211	56	285	9	2	24	35	21	137	**14**	172	26	**1**	26	53
+15 mins.	19	**224**	43	286	10	2	**27**	39	29	**146**	12	187	**35**	0	17	52
+30 mins.	14	188	46	248	**12**	**5**	23	**40**	29	107	11	147	34	1	22	57
+45 mins.	**25**	203	**73**	**301**	8	3	22	33	**37**	139	13	**189**	26	1	**32**	**59**
Total Volume	76	826	218	1120	39	12	96	147	116	529	50	695	121	3	97	221
% App. Total	6.8	73.8	19.5		26.5	8.2	65.3		16.7	76.1	7.2		54.8	1.4	43.9	
PHF	.760	.922	.747	.930	.813	.600	.889	.919	.784	.906	.893	.919	.864	.750	.758	.936

Counts Unlimited, Inc.
PO Box 1178
Corona, CA 92878
(951)268-6268

City of Ontario
N/S: Milliken Avenue
E/W: Guasti Road
Weather: Clear

File Name : 15_ONT_Mil_Gua AM
Site Code : 00322818
Start Date : 9/20/2022
Page No : 1

Groups Printed- Passenger Vehicles

	Milliken Avenue Southbound				Guasti Road Westbound				Milliken Avenue Northbound				Guasti Road Eastbound				
Start Time	Left	Thru	Right	App. Total	Left	Thru	Right	App. Total	Left	Thru	Right	App. Total	Left	Thru	Right	App. Total	Int. Total
07:00 AM	9	140	26	175	2	0	6	8	8	57	9	74	11	0	7	18	275
07:15 AM	17	115	20	152	3	0	3	6	15	74	5	94	9	1	15	25	277
07:30 AM	14	167	29	210	1	0	6	7	14	87	6	107	9	0	6	15	339
07:45 AM	21	184	48	253	2	1	2	5	18	118	6	142	10	0	14	24	424
Total	61	606	123	790	8	1	17	26	55	336	26	417	39	1	42	82	1315
08:00 AM	7	189	47	243	1	2	4	7	23	127	7	157	12	1	21	34	441
08:15 AM	13	212	25	250	5	0	6	11	18	91	4	113	7	1	5	13	387
08:30 AM	5	169	25	199	4	5	3	12	28	115	8	151	10	0	19	29	391
08:45 AM	12	171	51	234	5	1	3	9	18	106	4	128	5	0	9	14	385
Total	37	741	148	926	15	8	16	39	87	439	23	549	34	2	54	90	1604
Grand Total	98	1347	271	1716	23	9	33	65	142	775	49	966	73	3	96	172	2919
Apprch %	5.7	78.5	15.8		35.4	13.8	50.8		14.7	80.2	5.1		42.4	1.7	55.8		
Total %	3.4	46.1	9.3	58.8	0.8	0.3	1.1	2.2	4.9	26.6	1.7	33.1	2.5	0.1	3.3	5.9	

	Milliken Avenue Southbound				Guasti Road Westbound				Milliken Avenue Northbound				Guasti Road Eastbound				
Start Time	Left	Thru	Right	App. Total	Left	Thru	Right	App. Total	Left	Thru	Right	App. Total	Left	Thru	Right	App. Total	Int. Total
Peak Hour Analysis From 08:00 AM to 08:45 AM - Peak 1 of 1																	
Peak Hour for Entire Intersection Begins at 08:00 AM																	
08:00 AM	7	189	47	243	1	2	4	7	23	**127**	7	**157**	**12**	**1**	**21**	**34**	**441**
08:15 AM	**13**	**212**	25	**250**	**5**	0	**6**	11	18	91	4	113	7	1	5	13	387
08:30 AM	5	169	25	199	4	**5**	3	**12**	**28**	115	**8**	151	10	0	19	29	391
08:45 AM	12	171	**51**	234	5	1	3	9	18	106	4	128	5	0	9	14	385
Total Volume	37	741	148	926	15	8	16	39	87	439	23	549	34	2	54	90	1604
% App. Total	4	80	16		38.5	20.5	41		15.8	80	4.2		37.8	2.2	60		
PHF	.712	.874	.725	.926	.750	.400	.667	.813	.777	.864	.719	.874	.708	.500	.643	.662	.909

Counts Unlimited, Inc.
PO Box 1178
Corona, CA 92878
(951)268-6268

City of Ontario
N/S: Milliken Avenue
E/W: Guasti Road
Weather: Clear

File Name : 15_ONT_Mil_Gua AM
Site Code : 00322818
Start Date : 9/20/2022
Page No : 2

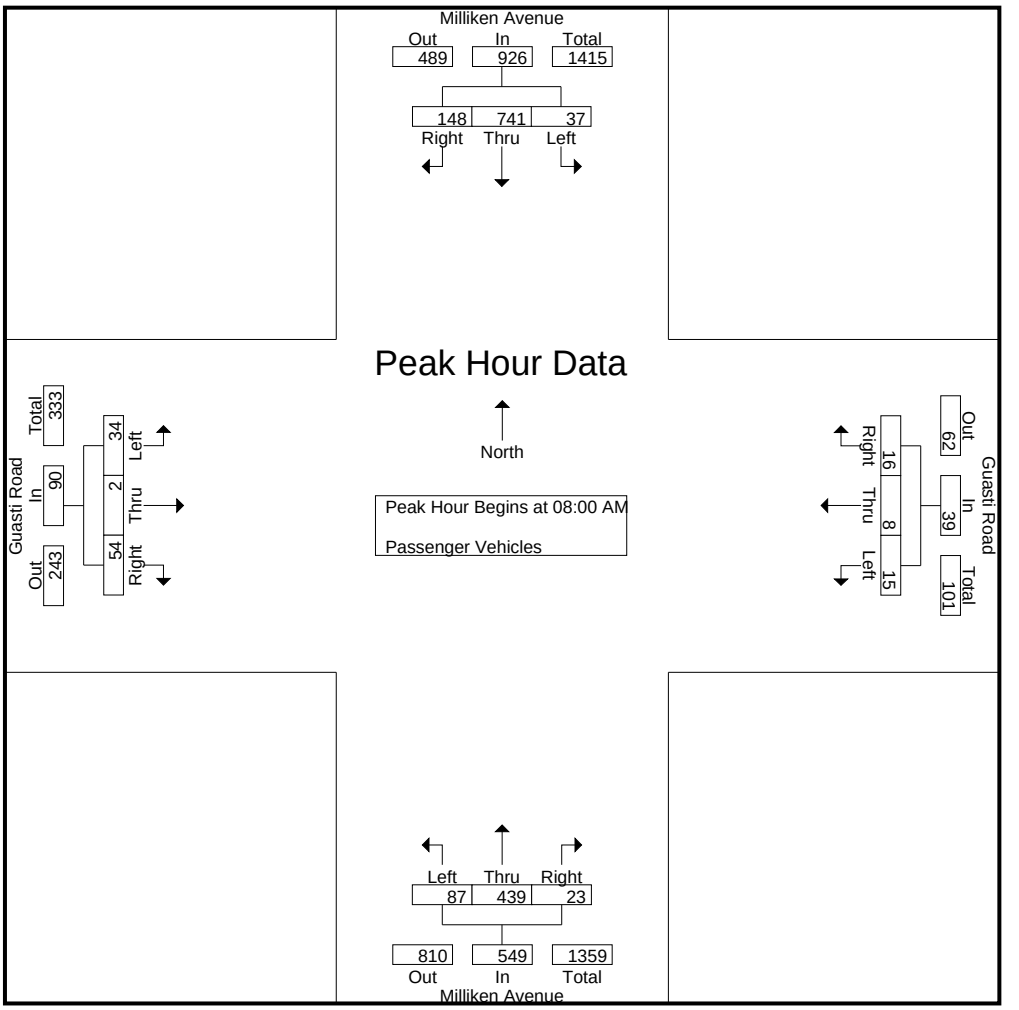

Peak Hour Analysis From 08:00 AM to 08:45 AM - Peak 1 of 1
Peak Hour for Each Approach Begins at:

	08:00 AM				08:00 AM				08:00 AM				08:00 AM			
+0 mins.	7	189	47	243	1	2	4	7	23	**127**	7	**157**	**12**	**1**	**21**	**34**
+15 mins.	**13**	**212**	25	**250**	**5**	0	**6**	11	18	91	4	113	7	1	5	13
+30 mins.	5	169	25	199	4	**5**	3	**12**	**28**	115	**8**	151	10	0	19	29
+45 mins.	12	171	**51**	234	5	1	3	9	18	106	4	128	5	0	9	14
Total Volume	37	741	148	926	15	8	16	39	87	439	23	549	34	2	54	90
% App. Total	4	80	16		38.5	20.5	41		15.8	80	4.2		37.8	2.2	60	
PHF	.712	.874	.725	.926	.750	.400	.667	.813	.777	.864	.719	.874	.708	.500	.643	.662

Counts Unlimited, Inc.
PO Box 1178
Corona, CA 92878
(951)268-6268

City of Ontario
N/S: Milliken Avenue
E/W: Guasti Road
Weather: Clear

File Name : 15_ONT_Mil_Gua AM
Site Code : 00322818
Start Date : 9/20/2022
Page No : 1

Groups Printed- Large 2 Axle Vehicles

	Milliken Avenue Southbound				Guasti Road Westbound				Milliken Avenue Northbound				Guasti Road Eastbound				
Start Time	Left	Thru	Right	App. Total	Left	Thru	Right	App. Total	Left	Thru	Right	App. Total	Left	Thru	Right	App. Total	Int. Total
07:00 AM	0	1	3	4	0	0	1	1	0	6	0	6	2	0	3	5	16
07:15 AM	0	0	0	0	0	0	1	1	2	4	0	6	2	0	5	7	14
07:30 AM	0	3	2	5	0	0	0	0	3	5	0	8	3	0	0	3	16
07:45 AM	0	5	5	10	0	0	0	0	0	4	1	5	2	0	2	4	19
Total	0	9	10	19	0	0	2	2	5	19	1	25	9	0	10	19	65
08:00 AM	0	10	1	11	0	0	0	0	2	3	0	5	1	0	4	5	21
08:15 AM	0	5	2	7	0	0	1	1	2	4	1	7	1	1	0	2	17
08:30 AM	0	8	2	10	0	0	1	1	1	2	1	4	2	0	0	2	17
08:45 AM	3	6	2	11	0	0	2	2	3	4	2	9	4	0	3	7	29
Total	3	29	7	39	0	0	4	4	8	13	4	25	8	1	7	16	84
Grand Total	3	38	17	58	0	0	6	6	13	32	5	50	17	1	17	35	149
Apprch %	5.2	65.5	29.3		0	0	100		26	64	10		48.6	2.9	48.6		
Total %	2	25.5	11.4	38.9	0	0	4	4	8.7	21.5	3.4	33.6	11.4	0.7	11.4	23.5	

	Milliken Avenue Southbound				Guasti Road Westbound				Milliken Avenue Northbound				Guasti Road Eastbound				
Start Time	Left	Thru	Right	App. Total	Left	Thru	Right	App. Total	Left	Thru	Right	App. Total	Left	Thru	Right	App. Total	Int. Total
Peak Hour Analysis From 08:00 AM to 08:45 AM - Peak 1 of 1																	
Peak Hour for Entire Intersection Begins at 08:00 AM																	
08:00 AM	0	**10**	1	**11**	0	0	0	0	2	3	0	5	1	0	**4**	5	21
08:15 AM	0	5	**2**	7	0	0	1	1	2	**4**	1	7	1	**1**	0	2	17
08:30 AM	0	8	2	10	0	0	1	1	1	2	1	4	2	0	0	2	17
08:45 AM	**3**	6	2	11	0	0	**2**	**2**	**3**	4	**2**	**9**	**4**	0	3	**7**	**29**
Total Volume	3	29	7	39	0	0	4	4	8	13	4	25	8	1	7	16	84
% App. Total	7.7	74.4	17.9		0	0	100		32	52	16		50	6.2	43.8		
PHF	.250	.725	.875	.886	.000	.000	.500	.500	.667	.813	.500	.694	.500	.250	.438	.571	.724

Counts Unlimited, Inc.
PO Box 1178
Corona, CA 92878
(951)268-6268

City of Ontario
N/S: Milliken Avenue
E/W: Guasti Road
Weather: Clear

File Name : 15_ONT_Mil_Gua AM
Site Code : 00322818
Start Date : 9/20/2022

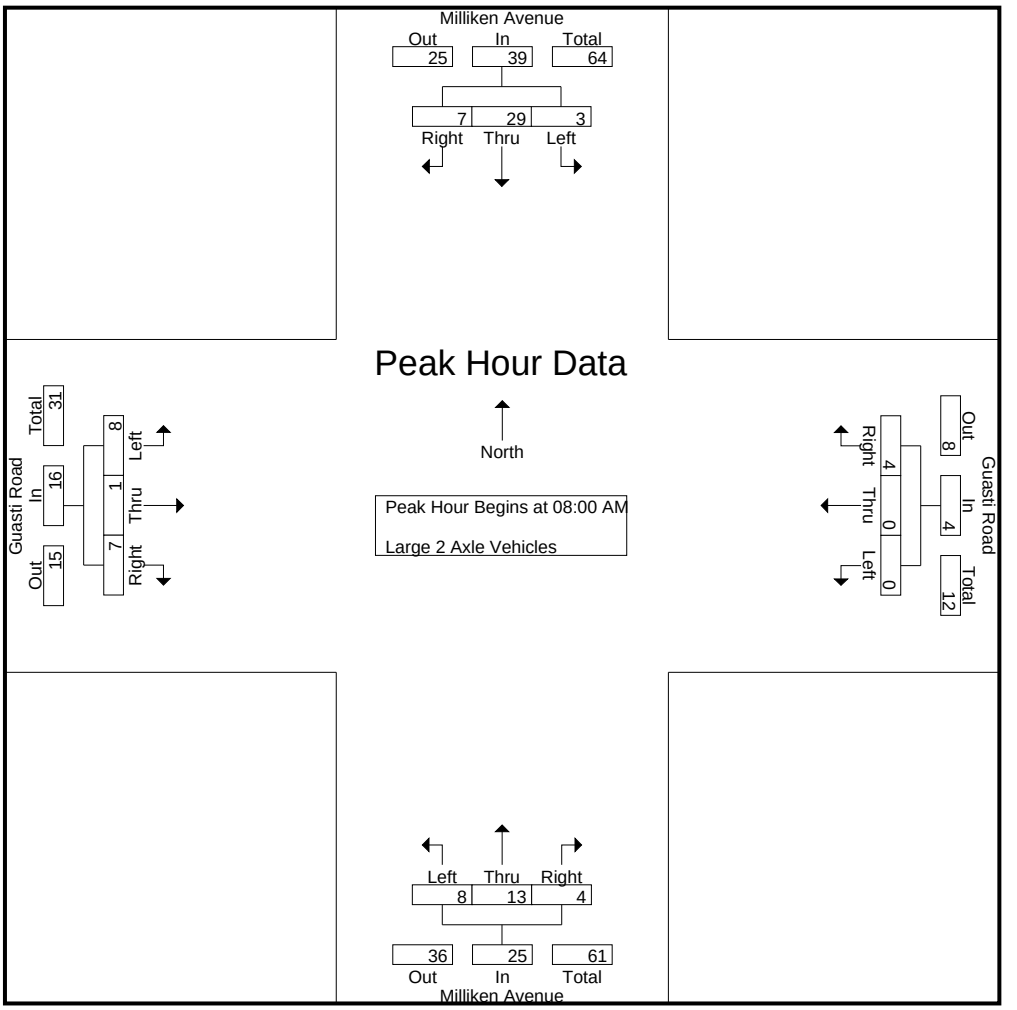

Peak Hour Analysis From 08:00 AM to 08:45 AM - Peak 1 of 1
Peak Hour for Each Approach Begins at:

	08:00 AM				08:00 AM				08:00 AM				08:00 AM			
+0 mins.	0	**10**	1	**11**	0	0	0	0	2	3	0	5	1	0	**4**	5
+15 mins.	0	5	**2**	7	0	0	1	1	2	**4**	1	7	1	**1**	0	2
+30 mins.	0	8	2	10	0	0	1	1	1	2	1	4	2	0	0	2
+45 mins.	**3**	6	2	11	0	0	**2**	**2**	**3**	4	**2**	**9**	**4**	0	3	**7**
Total Volume	3	29	7	39	0	0	4	4	8	13	4	25	8	1	7	16
% App. Total	7.7	74.4	17.9		0	0	100		32	52	16		50	6.2	43.8	
PHF	.250	.725	.875	.886	.000	.000	.500	.500	.667	.813	.500	.694	.500	.250	.438	.571

Counts Unlimited, Inc.
PO Box 1178
Corona, CA 92878
(951)268-6268

City of Ontario
N/S: Milliken Avenue
E/W: Guasti Road
Weather: Clear

File Name : 15_ONT_Mil_Gua AM
Site Code : 00322818
Start Date : 9/20/2022
Page No : 1

Groups Printed- 3 Axle Vehicles

	Milliken Avenue Southbound				Guasti Road Westbound				Milliken Avenue Northbound				Guasti Road Eastbound				
Start Time	Left	Thru	Right	App. Total	Left	Thru	Right	App. Total	Left	Thru	Right	App. Total	Left	Thru	Right	App. Total	Int. Total
07:00 AM	3	3	2	8	1	0	0	1	3	2	0	5	1	0	1	2	16
07:15 AM	0	2	0	2	1	1	6	8	1	0	0	1	2	0	1	3	14
07:30 AM	0	2	3	5	2	1	1	4	2	2	1	5	2	0	4	6	20
07:45 AM	0	6	0	6	1	1	3	5	0	2	1	3	3	0	0	3	17
Total	3	13	5	21	5	3	10	18	6	6	2	14	8	0	6	14	67
08:00 AM	4	3	1	8	3	0	1	4	2	2	1	5	2	0	1	3	20
08:15 AM	0	0	1	1	1	1	2	4	2	3	1	6	3	0	2	5	16
08:30 AM	1	2	3	6	2	0	1	3	5	5	1	11	4	1	1	6	26
08:45 AM	1	7	3	11	0	1	4	5	0	2	1	3	1	0	4	5	24
Total	6	12	8	26	6	2	8	16	9	12	4	25	10	1	8	19	86
Grand Total	9	25	13	47	11	5	18	34	15	18	6	39	18	1	14	33	153
Apprch %	19.1	53.2	27.7		32.4	14.7	52.9		38.5	46.2	15.4		54.5	3	42.4		
Total %	5.9	16.3	8.5	30.7	7.2	3.3	11.8	22.2	9.8	11.8	3.9	25.5	11.8	0.7	9.2	21.6	

	Milliken Avenue Southbound				Guasti Road Westbound				Milliken Avenue Northbound				Guasti Road Eastbound				
Start Time	Left	Thru	Right	App. Total	Left	Thru	Right	App. Total	Left	Thru	Right	App. Total	Left	Thru	Right	App. Total	Int. Total
Peak Hour Analysis From 08:00 AM to 08:45 AM - Peak 1 of 1																	
Peak Hour for Entire Intersection Begins at 08:00 AM																	
08:00 AM	**4**	3	1	8	**3**	0	1	4	2	2	**1**	5	2	0	1	3	20
08:15 AM	0	0	1	1	1	**1**	2	4	2	3	1	6	3	0	2	5	16
08:30 AM	1	2	**3**	6	2	0	1	3	**5**	**5**	1	**11**	**4**	**1**	1	**6**	**26**
08:45 AM	1	**7**	3	**11**	0	1	**4**	**5**	0	2	1	3	1	0	**4**	5	24
Total Volume	6	12	8	26	6	2	8	16	9	12	4	25	10	1	8	19	86
% App. Total	23.1	46.2	30.8		37.5	12.5	50		36	48	16		52.6	5.3	42.1		
PHF	.375	.429	.667	.591	.500	.500	.500	.800	.450	.600	1.00	.568	.625	.250	.500	.792	.827

Counts Unlimited, Inc.
PO Box 1178
Corona, CA 92878
(951)268-6268

City of Ontario
N/S: Milliken Avenue
E/W: Guasti Road
Weather: Clear

File Name : 15_ONT_Mil_Gua AM
Site Code : 00322818
Start Date : 9/20/2022
Page No : 2

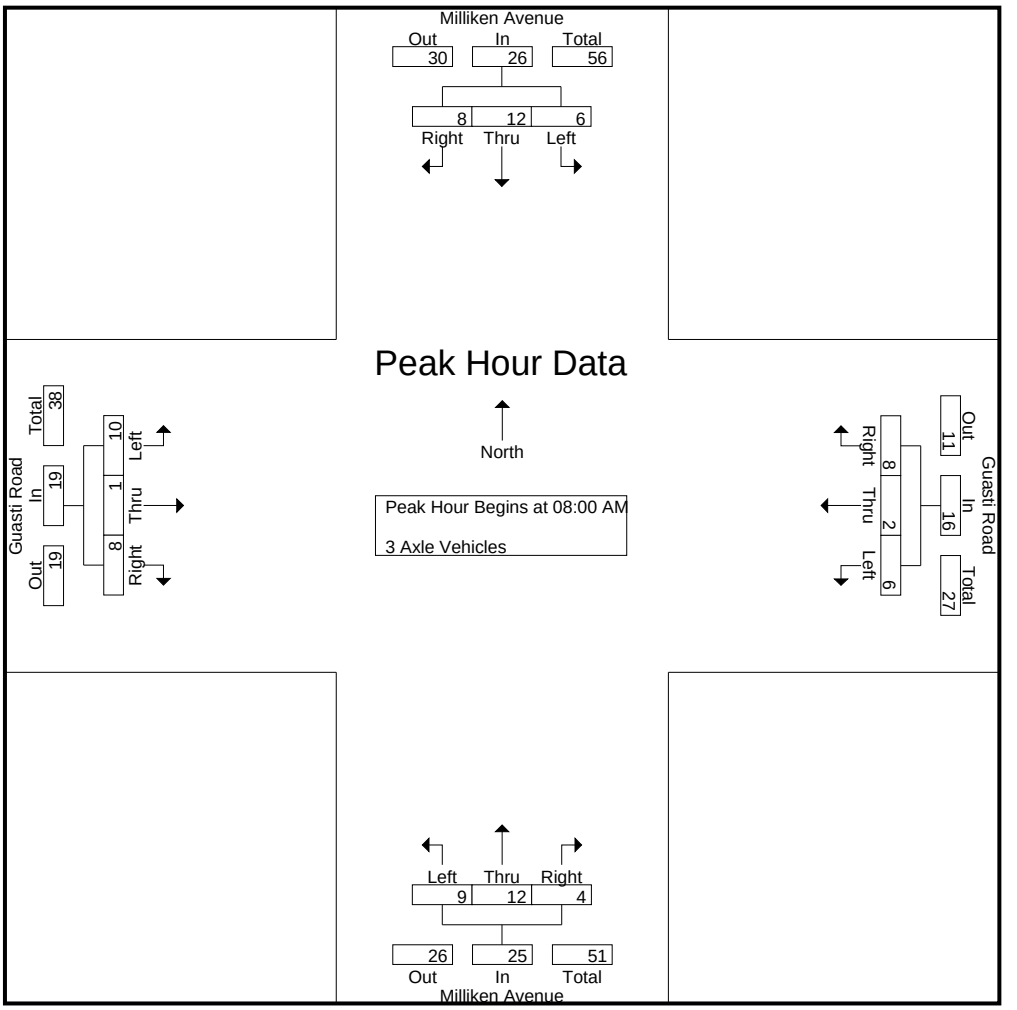

Peak Hour Analysis From 08:00 AM to 08:45 AM - Peak 1 of 1
Peak Hour for Each Approach Begins at:

	08:00 AM				08:00 AM				08:00 AM				08:00 AM			
+0 mins.	**4**	3	1	8	**3**	0	1	4	2	2	**1**	5	2	0	1	3
+15 mins.	0	0	1	1	1	**1**	2	4	2	3	1	6	3	0	2	5
+30 mins.	1	2	**3**	6	2	0	1	3	**5**	**5**	1	**11**	**4**	**1**	1	**6**
+45 mins.	1	**7**	3	**11**	0	1	**4**	**5**	0	2	1	3	1	0	**4**	5
Total Volume	6	12	8	26	6	2	8	16	9	12	4	25	10	1	8	19
% App. Total	23.1	46.2	30.8		37.5	12.5	50		36	48	16		52.6	5.3	42.1	
PHF	.375	.429	.667	.591	.500	.500	.500	.800	.450	.600	1.000	.568	.625	.250	.500	.792

Counts Unlimited, Inc.
PO Box 1178
Corona, CA 92878
(951)268-6268

City of Ontario
N/S: Milliken Avenue
E/W: Guasti Road
Weather: Clear

File Name : 15_ONT_Mil_Gua AM
Site Code : 00322818
Start Date : 9/20/2022
Page No : 1

Groups Printed- 4+ Axle Trucks

	Milliken Avenue Southbound				Guasti Road Westbound				Milliken Avenue Northbound				Guasti Road Eastbound				
Start Time	Left	Thru	Right	App. Total	Left	Thru	Right	App. Total	Left	Thru	Right	App. Total	Left	Thru	Right	App. Total	Int. Total
07:00 AM	7	12	11	30	6	0	21	27	2	18	1	21	20	0	7	27	105
07:15 AM	1	9	4	14	3	0	14	17	3	8	3	14	13	0	5	18	63
07:30 AM	6	10	7	23	3	0	18	21	3	7	2	12	21	0	7	28	84
07:45 AM	5	11	7	23	0	1	14	15	3	13	6	22	19	1	6	26	86
Total	19	42	29	90	12	1	67	80	11	46	12	69	73	1	25	99	338
08:00 AM	7	9	7	23	5	0	19	24	2	14	4	20	11	0	6	17	84
08:15 AM	6	7	15	28	4	1	18	23	7	9	5	21	20	0	4	24	96
08:30 AM	8	9	16	33	6	0	18	24	3	17	3	23	13	1	6	20	100
08:45 AM	9	19	17	45	3	1	13	17	3	10	16	29	22	2	7	31	122
Total	30	44	55	129	18	2	68	88	15	50	28	93	66	3	23	92	402
Grand Total	49	86	84	219	30	3	135	168	26	96	40	162	139	4	48	191	740
Apprch %	22.4	39.3	38.4		17.9	1.8	80.4		16	59.3	24.7		72.8	2.1	25.1		
Total %	6.6	11.6	11.4	29.6	4.1	0.4	18.2	22.7	3.5	13	5.4	21.9	18.8	0.5	6.5	25.8	

	Milliken Avenue Southbound				Guasti Road Westbound				Milliken Avenue Northbound				Guasti Road Eastbound				
Start Time	Left	Thru	Right	App. Total	Left	Thru	Right	App. Total	Left	Thru	Right	App. Total	Left	Thru	Right	App. Total	Int. Total
Peak Hour Analysis From 08:00 AM to 08:45 AM - Peak 1 of 1																	
Peak Hour for Entire Intersection Begins at 08:00 AM																	
08:00 AM	7	9	7	23	5	0	**19**	**24**	2	14	4	20	11	0	6	17	84
08:15 AM	6	7	15	28	4	**1**	18	23	**7**	9	5	21	20	0	4	24	96
08:30 AM	8	9	16	33	**6**	0	18	24	3	**17**	3	23	13	1	6	20	100
08:45 AM	**9**	**19**	**17**	**45**	3	1	13	17	3	10	**16**	**29**	**22**	**2**	**7**	**31**	**122**
Total Volume	30	44	55	129	18	2	68	88	15	50	28	93	66	3	23	92	402
% App. Total	23.3	34.1	42.6		20.5	2.3	77.3		16.1	53.8	30.1		71.7	3.3	25		
PHF	.833	.579	.809	.717	.750	.500	.895	.917	.536	.735	.438	.802	.750	.375	.821	.742	.824

Counts Unlimited, Inc.
PO Box 1178
Corona, CA 92878
(951)268-6268

City of Ontario
N/S: Milliken Avenue
E/W: Guasti Road
Weather: Clear

File Name : 15_ONT_Mil_Gua AM
Site Code : 00322818
Start Date : 9/20/2022

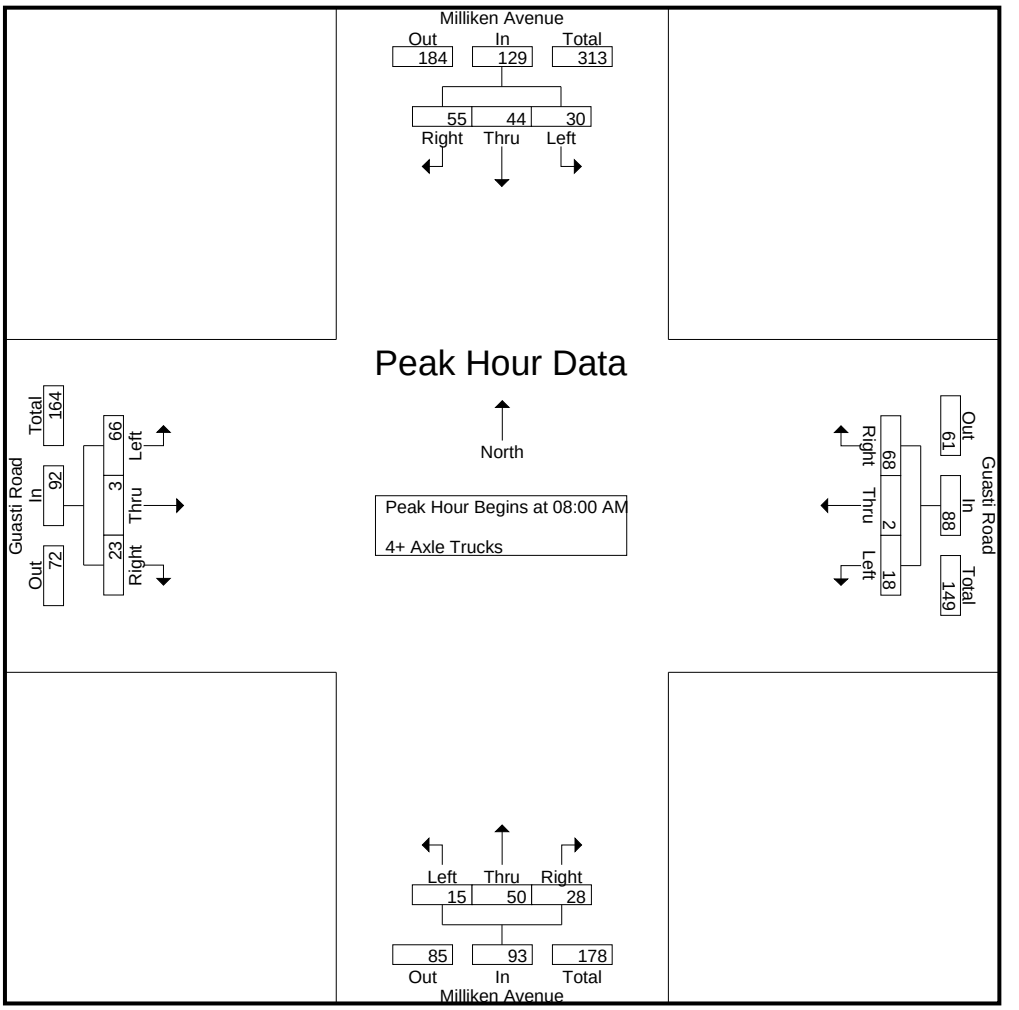

Peak Hour Analysis From 08:00 AM to 08:45 AM - Peak 1 of 1
Peak Hour for Each Approach Begins at:

	08:00 AM				08:00 AM				08:00 AM				08:00 AM			
+0 mins.	7	9	7	23	5	0	**19**	**24**	2	14	4	20	11	0	6	17
+15 mins.	6	7	15	28	4	**1**	18	23	**7**	9	5	21	20	0	4	24
+30 mins.	8	9	16	33	**6**	0	18	24	3	**17**	3	23	13	1	6	20
+45 mins.	**9**	**19**	**17**	**45**	3	1	13	17	3	10	**16**	**29**	**22**	**2**	**7**	**31**
Total Volume	30	44	55	129	18	2	68	88	15	50	28	93	66	3	23	92
% App. Total	23.3	34.1	42.6		20.5	2.3	77.3		16.1	53.8	30.1		71.7	3.3	25	
PHF	.833	.579	.809	.717	.750	.500	.895	.917	.536	.735	.438	.802	.750	.375	.821	.742

Counts Unlimited, Inc.
PO Box 1178
Corona, CA 92878
(951)268-6268

City of Ontario
N/S: Milliken Avenue
E/W: Guasti Road
Weather: Clear

File Name : 15_ONT_Mil_Gua PM
Site Code : 00322818
Start Date : 9/20/2022
Page No : 1

Groups Printed- Passenger Vehicles - Large 2 Axle Vehicles - 3 Axle Vehicles - 4+ Axle Trucks

	Milliken Avenue Southbound				Guasti Road Westbound				Milliken Avenue Northbound				Guasti Road Eastbound				
Start Time	Left	Thru	Right	App. Total	Left	Thru	Right	App. Total	Left	Thru	Right	App. Total	Left	Thru	Right	App. Total	Int. Total
04:00 PM	29	178	37	244	4	3	19	26	14	285	17	316	54	0	37	91	677
04:15 PM	15	155	36	206	15	1	20	36	16	230	11	257	59	1	21	81	580
04:30 PM	24	154	35	213	15	2	22	39	19	251	14	284	45	3	35	83	619
04:45 PM	23	168	43	234	7	4	21	32	30	242	16	288	46	4	24	74	628
Total	91	655	151	897	41	10	82	133	79	1008	58	1145	204	8	117	329	2504
05:00 PM	22	179	52	253	9	1	25	35	11	283	15	309	50	3	43	96	693
05:15 PM	27	189	38	254	15	5	23	43	13	240	7	260	43	3	29	75	632
05:30 PM	22	145	35	202	5	3	12	20	15	288	12	315	34	8	29	71	608
05:45 PM	24	132	38	194	12	4	28	44	22	207	11	240	30	3	17	50	528
Total	95	645	163	903	41	13	88	142	61	1018	45	1124	157	17	118	292	2461
Grand Total	186	1300	314	1800	82	23	170	275	140	2026	103	2269	361	25	235	621	4965
Apprch %	10.3	72.2	17.4		29.8	8.4	61.8		6.2	89.3	4.5		58.1	4	37.8		
Total %	3.7	26.2	6.3	36.3	1.7	0.5	3.4	5.5	2.8	40.8	2.1	45.7	7.3	0.5	4.7	12.5	
Passenger Vehicles	53	1167	160	1380	39	13	83	135	86	1895	35	2016	280	11	196	487	4018
% Passenger Vehicles	28.5	89.8	51	76.7	47.6	56.5	48.8	49.1	61.4	93.5	34	88.8	77.6	44	83.4	78.4	80.9
Large 2 Axle Vehicles	7	42	11	60	6	1	6	13	12	25	2	39	4	2	14	20	132
% Large 2 Axle Vehicles	3.8	3.2	3.5	3.3	7.3	4.3	3.5	4.7	8.6	1.2	1.9	1.7	1.1	8	6	3.2	2.7
3 Axle Vehicles	21	22	23	66	7	3	19	29	7	21	11	39	12	5	7	24	158
% 3 Axle Vehicles	11.3	1.7	7.3	3.7	8.5	13	11.2	10.5	5	1	10.7	1.7	3.3	20	3	3.9	3.2
4+ Axle Trucks	105	69	120	294	30	6	62	98	35	85	55	175	65	7	18	90	657
% 4+ Axle Trucks	56.5	5.3	38.2	16.3	36.6	26.1	36.5	35.6	25	4.2	53.4	7.7	18	28	7.7	14.5	13.2

	Milliken Avenue Southbound				Guasti Road Westbound				Milliken Avenue Northbound				Guasti Road Eastbound				
Start Time	Left	Thru	Right	App. Total	Left	Thru	Right	App. Total	Left	Thru	Right	App. Total	Left	Thru	Right	App. Total	Int. Total
Peak Hour Analysis From 04:00 PM to 05:45 PM - Peak 1 of 1																	
Peak Hour for Entire Intersection Begins at 04:30 PM																	
04:30 PM	24	154	35	213	**15**	2	22	39	19	251	14	284	45	3	35	83	619
04:45 PM	23	168	43	234	7	4	21	32	**30**	242	**16**	288	46	**4**	24	74	628
05:00 PM	22	179	**52**	253	9	1	**25**	35	11	**283**	15	**309**	**50**	3	**43**	**96**	**693**
05:15 PM	**27**	**189**	38	**254**	15	**5**	23	**43**	13	240	7	260	43	3	29	75	632
Total Volume	96	690	168	954	46	12	91	149	73	1016	52	1141	184	13	131	328	2572
% App. Total	10.1	72.3	17.6		30.9	8.1	61.1		6.4	89	4.6		56.1	4	39.9		
PHF	.889	.913	.808	.939	.767	.600	.910	.866	.608	.898	.813	.923	.920	.813	.762	.854	.928

Counts Unlimited, Inc.
PO Box 1178
Corona, CA 92878
(951)268-6268

City of Ontario
N/S: Milliken Avenue
E/W: Guasti Road
Weather: Clear

File Name : 15_ONT_Mil_Gua PM
Site Code : 00322818
Start Date : 9/20/2022
Page No : 2

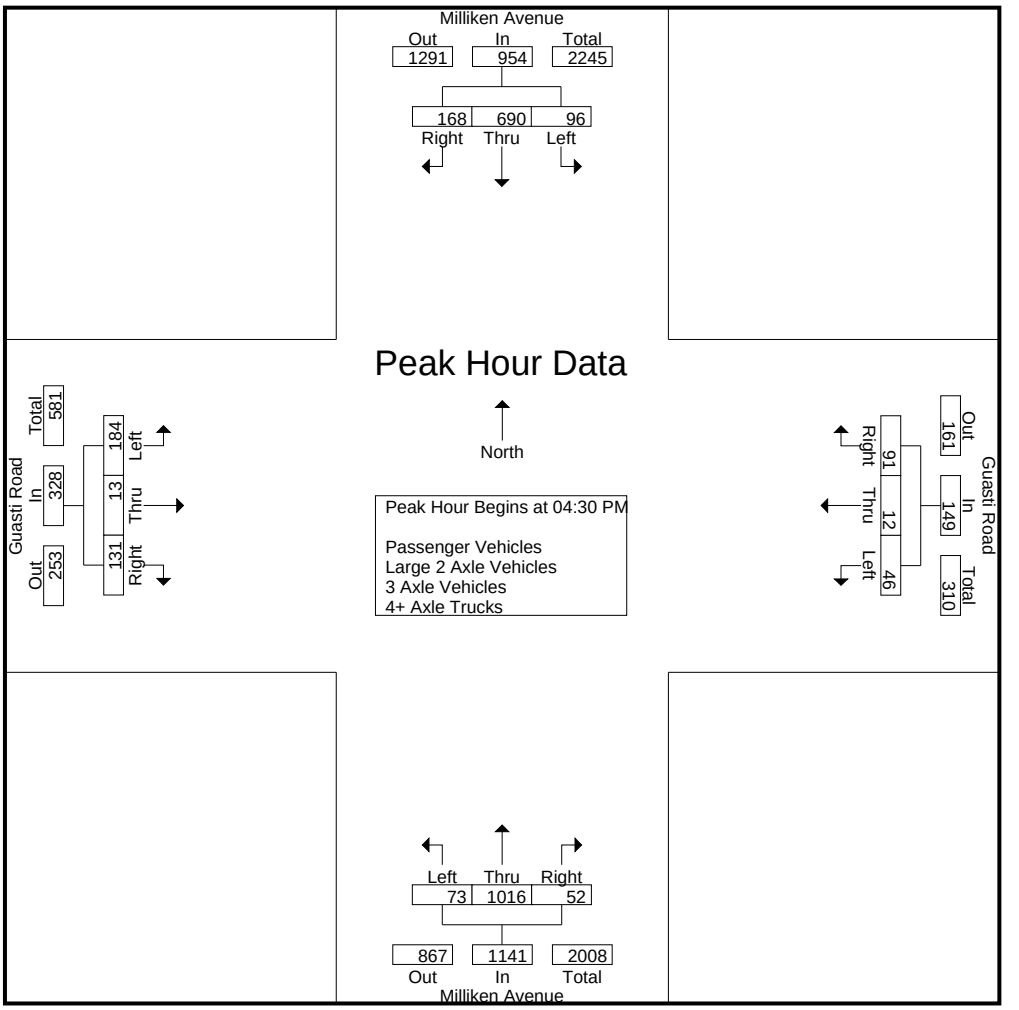

Peak Hour Analysis From 04:00 PM to 05:45 PM - Peak 1 of 1
Peak Hour for Each Approach Begins at:

	04:30 PM				04:30 PM				04:45 PM				04:15 PM			
+0 mins.	24	154	35	213	**15**	2	22	39	**30**	242	**16**	288	**59**	1	21	81
+15 mins.	23	168	43	234	7	4	21	32	11	283	15	309	45	3	35	83
+30 mins.	22	179	**52**	253	9	1	**25**	35	13	240	7	260	46	**4**	24	74
+45 mins.	**27**	**189**	38	**254**	15	**5**	23	**43**	15	**288**	12	**315**	50	3	**43**	**96**
Total Volume	96	690	168	954	46	12	91	149	69	1053	50	1172	200	11	123	334
% App. Total	10.1	72.3	17.6		30.9	8.1	61.1		5.9	89.8	4.3		59.9	3.3	36.8	
PHF	.889	.913	.808	.939	.767	.600	.910	.866	.575	.914	.781	.930	.847	.688	.715	.870

Counts Unlimited, Inc.
PO Box 1178
Corona, CA 92878
(951)268-6268

City of Ontario
N/S: Milliken Avenue
E/W: Guasti Road
Weather: Clear

File Name : 15_ONT_Mil_Gua PM
Site Code : 00322818
Start Date : 9/20/2022
Page No : 1

Groups Printed- Passenger Vehicles

	Milliken Avenue Southbound				Guasti Road Westbound				Milliken Avenue Northbound				Guasti Road Eastbound				
Start Time	Left	Thru	Right	App. Total	Left	Thru	Right	App. Total	Left	Thru	Right	App. Total	Left	Thru	Right	App. Total	Int. Total
04:00 PM	9	155	28	192	2	2	9	13	13	263	5	281	48	0	31	79	565
04:15 PM	6	131	19	156	4	0	8	12	5	206	4	215	41	0	17	58	441
04:30 PM	9	140	18	167	9	1	12	22	14	236	5	255	34	3	27	64	508
04:45 PM	9	153	15	177	4	3	13	20	20	224	5	249	35	1	23	59	505
Total	33	579	80	692	19	6	42	67	52	929	19	1000	158	4	98	260	2019
05:00 PM	4	164	27	195	6	1	15	22	3	270	5	278	40	0	37	77	572
05:15 PM	5	166	20	191	6	2	9	17	7	230	1	238	33	2	25	60	506
05:30 PM	5	135	14	154	2	0	5	7	8	273	6	287	23	2	22	47	495
05:45 PM	6	123	19	148	6	4	12	22	16	193	4	213	26	3	14	43	426
Total	20	588	80	688	20	7	41	68	34	966	16	1016	122	7	98	227	1999
Grand Total	53	1167	160	1380	39	13	83	135	86	1895	35	2016	280	11	196	487	4018
Apprch %	3.8	84.6	11.6		28.9	9.6	61.5		4.3	94	1.7		57.5	2.3	40.2		
Total %	1.3	29	4	34.3	1	0.3	2.1	3.4	2.1	47.2	0.9	50.2	7	0.3	4.9	12.1	

	Milliken Avenue Southbound				Guasti Road Westbound				Milliken Avenue Northbound				Guasti Road Eastbound				
Start Time	Left	Thru	Right	App. Total	Left	Thru	Right	App. Total	Left	Thru	Right	App. Total	Left	Thru	Right	App. Total	Int. Total
Peak Hour Analysis From 04:30 PM to 05:15 PM - Peak 1 of 1																	
Peak Hour for Entire Intersection Begins at 04:30 PM																	
04:30 PM	**9**	140	18	167	**9**	1	12	**22**	14	236	**5**	255	34	**3**	27	64	508
04:45 PM	9	153	15	177	4	**3**	13	20	**20**	224	5	249	35	1	23	59	505
05:00 PM	4	164	**27**	**195**	6	1	**15**	22	3	**270**	5	**278**	**40**	0	**37**	**77**	**572**
05:15 PM	5	**166**	20	191	6	2	9	17	7	230	1	238	33	2	25	60	506
Total Volume	27	623	80	730	25	7	49	81	44	960	16	1020	142	6	112	260	2091
% App. Total	3.7	85.3	11		30.9	8.6	60.5		4.3	94.1	1.6		54.6	2.3	43.1		
PHF	.750	.938	.741	.936	.694	.583	.817	.920	.550	.889	.800	.917	.888	.500	.757	.844	.914

Counts Unlimited, Inc.
PO Box 1178
Corona, CA 92878
(951)268-6268

City of Ontario
N/S: Milliken Avenue
E/W: Guasti Road
Weather: Clear

File Name : 15_ONT_Mil_Gua PM
Site Code : 00322818
Start Date : 9/20/2022
Page No : 2

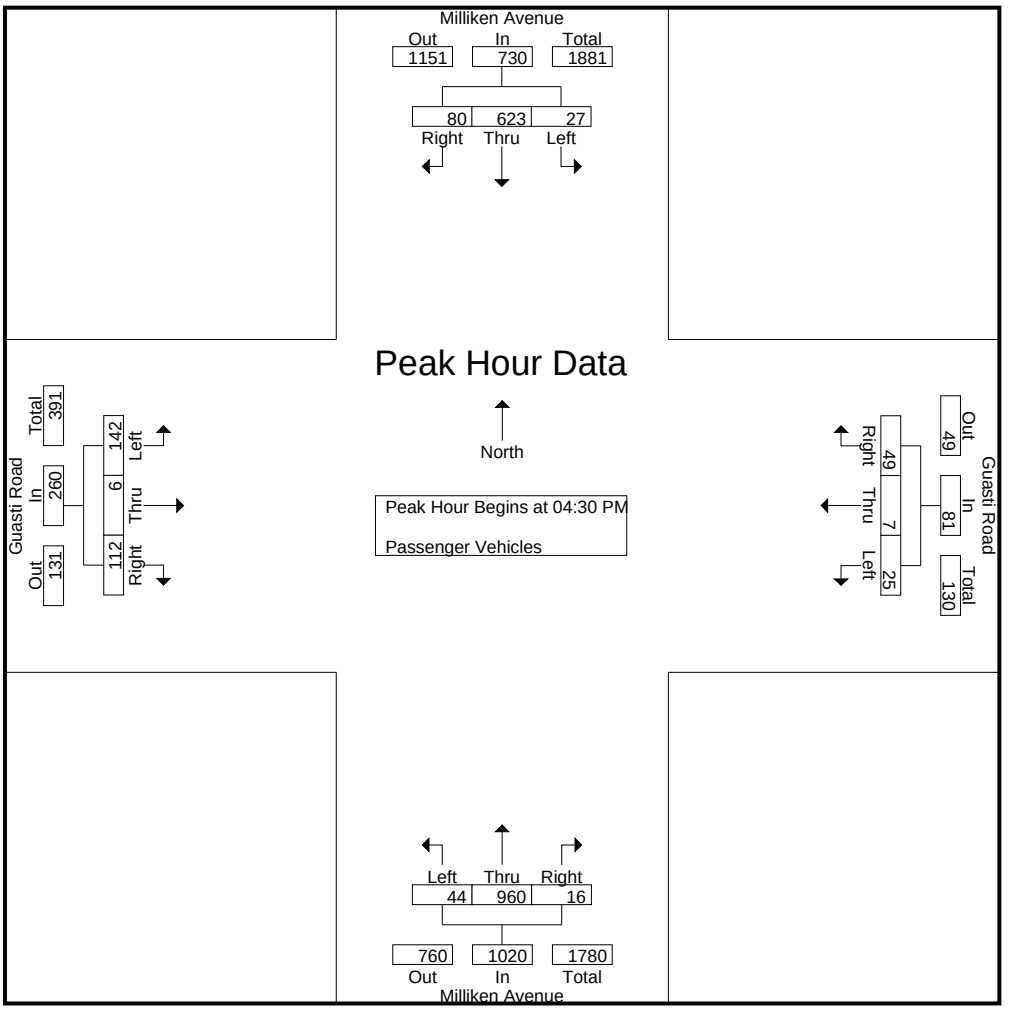

Peak Hour Analysis From 04:30 PM to 05:15 PM - Peak 1 of 1
Peak Hour for Each Approach Begins at:

	04:30 PM				04:30 PM				04:30 PM				04:30 PM			
+0 mins.	**9**	140	18	167	**9**	1	12	**22**	14	236	**5**	255	34	**3**	27	64
+15 mins.	9	153	15	177	4	**3**	13	20	**20**	224	5	249	35	1	23	59
+30 mins.	4	164	**27**	**195**	6	1	**15**	22	3	**270**	5	**278**	**40**	0	**37**	**77**
+45 mins.	5	**166**	20	191	6	2	9	17	7	230	1	238	33	2	25	60
Total Volume	27	623	80	730	25	7	49	81	44	960	16	1020	142	6	112	260
% App. Total	3.7	85.3	11		30.9	8.6	60.5		4.3	94.1	1.6		54.6	2.3	43.1	
PHF	.750	.938	.741	.936	.694	.583	.817	.920	.550	.889	.800	.917	.888	.500	.757	.844

Counts Unlimited, Inc.
PO Box 1178
Corona, CA 92878
(951)268-6268

City of Ontario
N/S: Milliken Avenue
E/W: Guasti Road
Weather: Clear

File Name : 15_ONT_Mil_Gua PM
Site Code : 00322818
Start Date : 9/20/2022
Page No : 1

Groups Printed- Large 2 Axle Vehicles

	Milliken Avenue Southbound				Guasti Road Westbound				Milliken Avenue Northbound				Guasti Road Eastbound				
Start Time	Left	Thru	Right	App. Total	Left	Thru	Right	App. Total	Left	Thru	Right	App. Total	Left	Thru	Right	App. Total	Int. Total
04:00 PM	4	10	2	16	0	0	0	0	0	8	0	8	0	0	1	1	25
04:15 PM	0	5	2	7	1	1	2	4	4	4	0	8	1	1	3	5	24
04:30 PM	0	3	2	5	1	0	0	1	1	2	1	4	0	0	5	5	15
04:45 PM	0	8	0	8	0	0	1	1	3	5	0	8	1	0	0	1	18
Total	4	26	6	36	2	1	3	6	8	19	1	28	2	1	9	12	82
05:00 PM	1	3	3	7	1	0	0	1	1	1	1	3	2	0	2	4	15
05:15 PM	0	6	0	6	2	0	1	3	1	2	0	3	0	0	2	2	14
05:30 PM	0	4	1	5	0	0	1	1	2	1	0	3	0	1	0	1	10
05:45 PM	2	3	1	6	1	0	1	2	0	2	0	2	0	0	1	1	11
Total	3	16	5	24	4	0	3	7	4	6	1	11	2	1	5	8	50
Grand Total	7	42	11	60	6	1	6	13	12	25	2	39	4	2	14	20	132
Apprch %	11.7	70	18.3		46.2	7.7	46.2		30.8	64.1	5.1		20	10	70		
Total %	5.3	31.8	8.3	45.5	4.5	0.8	4.5	9.8	9.1	18.9	1.5	29.5	3	1.5	10.6	15.2	

	Milliken Avenue Southbound				Guasti Road Westbound				Milliken Avenue Northbound				Guasti Road Eastbound				
Start Time	Left	Thru	Right	App. Total	Left	Thru	Right	App. Total	Left	Thru	Right	App. Total	Left	Thru	Right	App. Total	Int. Total
Peak Hour Analysis From 04:30 PM to 05:15 PM - Peak 1 of 1																	
Peak Hour for Entire Intersection Begins at 04:30 PM																	
04:30 PM	0	3	2	5	1	0	0	1	1	2	**1**	4	0	0	**5**	**5**	15
04:45 PM	0	**8**	0	**8**	0	0	**1**	1	**3**	**5**	0	**8**	1	0	0	1	**18**
05:00 PM	**1**	3	**3**	7	1	0	0	1	1	1	1	3	**2**	0	2	4	15
05:15 PM	0	6	0	6	**2**	0	1	**3**	1	2	0	3	0	0	2	2	14
Total Volume	1	20	5	26	4	0	2	6	6	10	2	18	3	0	9	12	62
% App. Total	3.8	76.9	19.2		66.7	0	33.3		33.3	55.6	11.1		25	0	75		
PHF	.250	.625	.417	.813	.500	.000	.500	.500	.500	.500	.500	.563	.375	.000	.450	.600	.861

Counts Unlimited, Inc.
PO Box 1178
Corona, CA 92878
(951)268-6268

City of Ontario
N/S: Milliken Avenue
E/W: Guasti Road
Weather: Clear

File Name : 15_ONT_Mil_Gua PM
Site Code : 00322818
Start Date : 9/20/2022
Page No : 2

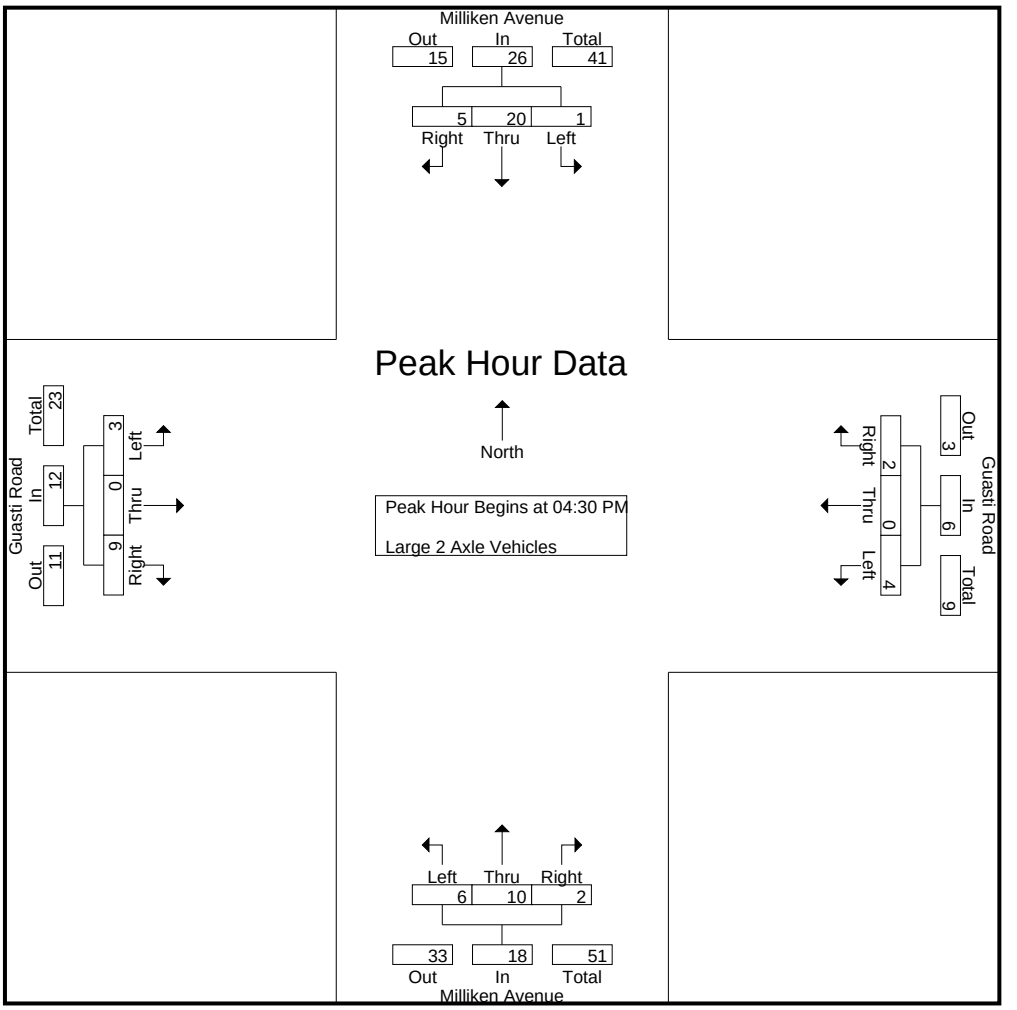

Peak Hour Analysis From 04:30 PM to 05:15 PM - Peak 1 of 1
Peak Hour for Each Approach Begins at:

	04:30 PM				04:30 PM				04:30 PM				04:30 PM			
+0 mins.	0	3	2	5	1	0	0	1	1	2	**1**	4	0	0	**5**	**5**
+15 mins.	0	**8**	0	**8**	0	0	**1**	1	**3**	**5**	0	**8**	1	0	0	1
+30 mins.	**1**	3	**3**	7	1	0	0	1	1	1	1	3	**2**	0	2	4
+45 mins.	0	6	0	6	**2**	0	1	**3**	1	2	0	3	0	0	2	2
Total Volume	1	20	5	26	4	0	2	6	6	10	2	18	3	0	9	12
% App. Total	3.8	76.9	19.2		66.7	0	33.3		33.3	55.6	11.1		25	0	75	
PHF	.250	.625	.417	.813	.500	.000	.500	.500	.500	.500	.500	.563	.375	.000	.450	.600

Counts Unlimited, Inc.
PO Box 1178
Corona, CA 92878
(951)268-6268

City of Ontario
N/S: Milliken Avenue
E/W: Guasti Road
Weather: Clear

File Name : 15_ONT_Mil_Gua PM
Site Code : 00322818
Start Date : 9/20/2022
Page No : 1

Groups Printed- 3 Axle Vehicles

	Milliken Avenue Southbound				Guasti Road Westbound				Milliken Avenue Northbound				Guasti Road Eastbound				
Start Time	Left	Thru	Right	App. Total	Left	Thru	Right	App. Total	Left	Thru	Right	App. Total	Left	Thru	Right	App. Total	Int. Total
04:00 PM	1	4	2	7	0	1	4	5	0	4	2	6	0	0	2	2	20
04:15 PM	0	3	3	6	3	0	2	5	2	3	3	8	2	0	0	2	21
04:30 PM	1	2	2	5	0	0	1	1	1	0	0	1	2	0	1	3	10
04:45 PM	1	3	8	12	1	1	2	4	1	6	1	8	1	2	0	3	27
Total	3	12	15	30	4	2	9	15	4	13	6	23	5	2	3	10	78
05:00 PM	5	4	2	11	0	0	1	1	0	1	2	3	3	2	1	6	21
05:15 PM	3	3	2	8	1	1	6	8	2	0	0	2	2	0	2	4	22
05:30 PM	6	1	4	11	1	0	0	1	1	3	1	5	1	1	0	2	19
05:45 PM	4	2	0	6	1	0	3	4	0	4	2	6	1	0	1	2	18
Total	18	10	8	36	3	1	10	14	3	8	5	16	7	3	4	14	80
Grand Total	21	22	23	66	7	3	19	29	7	21	11	39	12	5	7	24	158
Apprch %	31.8	33.3	34.8		24.1	10.3	65.5		17.9	53.8	28.2		50	20.8	29.2		
Total %	13.3	13.9	14.6	41.8	4.4	1.9	12	18.4	4.4	13.3	7	24.7	7.6	3.2	4.4	15.2	

	Milliken Avenue Southbound				Guasti Road Westbound				Milliken Avenue Northbound				Guasti Road Eastbound				
Start Time	Left	Thru	Right	App. Total	Left	Thru	Right	App. Total	Left	Thru	Right	App. Total	Left	Thru	Right	App. Total	Int. Total
Peak Hour Analysis From 04:30 PM to 05:15 PM - Peak 1 of 1																	
Peak Hour for Entire Intersection Begins at 04:30 PM																	
04:30 PM	1	2	2	5	0	0	1	1	1	0	0	1	2	0	1	3	10
04:45 PM	1	3	**8**	**12**	**1**	**1**	2	4	1	**6**	1	**8**	1	**2**	0	3	**27**
05:00 PM	**5**	**4**	2	11	0	0	1	1	0	1	**2**	3	**3**	2	1	**6**	21
05:15 PM	3	3	2	8	1	1	**6**	**8**	**2**	0	0	2	2	0	**2**	4	22
Total Volume	10	12	14	36	2	2	10	14	4	7	3	14	8	4	4	16	80
% App. Total	27.8	33.3	38.9		14.3	14.3	71.4		28.6	50	21.4		50	25	25		
PHF	.500	.750	.438	.750	.500	.500	.417	.438	.500	.292	.375	.438	.667	.500	.500	.667	.741

Counts Unlimited, Inc.
PO Box 1178
Corona, CA 92878
(951)268-6268

City of Ontario
N/S: Milliken Avenue
E/W: Guasti Road
Weather: Clear

File Name : 15_ONT_Mil_Gua PM
Site Code : 00322818
Start Date : 9/20/2022
Page No : 2

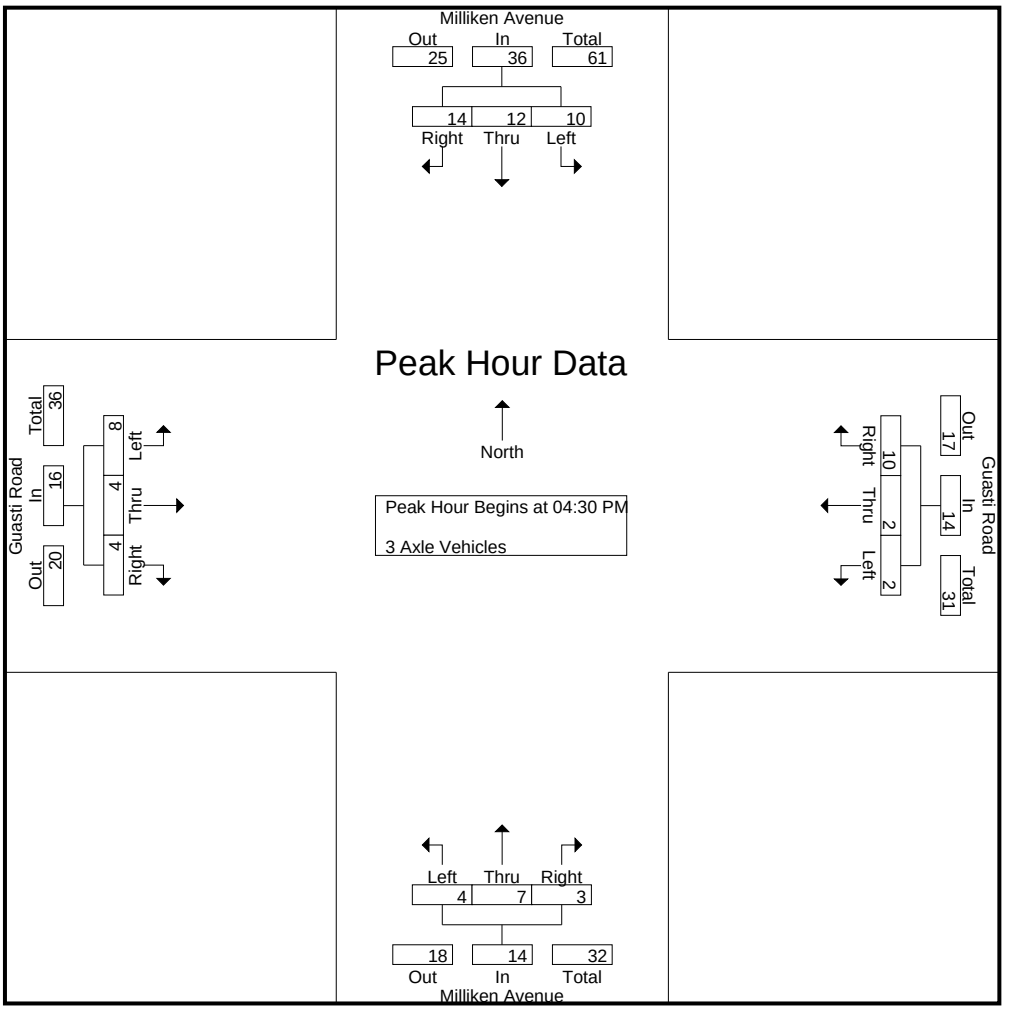

Peak Hour Analysis From 04:30 PM to 05:15 PM - Peak 1 of 1
Peak Hour for Each Approach Begins at:

	04:30 PM				04:30 PM				04:30 PM				04:30 PM			
+0 mins.	1	2	2	5	0	0	1	1	1	0	0	1	2	0	1	3
+15 mins.	1	3	**8**	**12**	**1**	**1**	2	4	1	**6**	1	**8**	1	**2**	0	3
+30 mins.	**5**	**4**	2	11	0	0	1	1	0	1	**2**	3	**3**	2	1	**6**
+45 mins.	3	3	2	8	1	1	**6**	**8**	**2**	0	0	2	2	0	**2**	4
Total Volume	10	12	14	36	2	2	10	14	4	7	3	14	8	4	4	16
% App. Total	27.8	33.3	38.9		14.3	14.3	71.4		28.6	50	21.4		50	25	25	
PHF	.500	.750	.438	.750	.500	.500	.417	.438	.500	.292	.375	.438	.667	.500	.500	.667

Counts Unlimited, Inc.
PO Box 1178
Corona, CA 92878
(951)268-6268

City of Ontario
N/S: Milliken Avenue
E/W: Guasti Road
Weather: Clear

File Name : 15_ONT_Mil_Gua PM
Site Code : 00322818
Start Date : 9/20/2022
Page No : 1

Groups Printed- 4+ Axle Trucks

	Milliken Avenue Southbound				Guasti Road Westbound				Milliken Avenue Northbound				Guasti Road Eastbound				
Start Time	Left	Thru	Right	App. Total	Left	Thru	Right	App. Total	Left	Thru	Right	App. Total	Left	Thru	Right	App. Total	Int. Total
04:00 PM	15	9	5	29	2	0	6	8	1	10	10	21	6	0	3	9	67
04:15 PM	9	16	12	37	7	0	8	15	5	17	4	26	15	0	1	16	94
04:30 PM	14	9	13	36	5	1	9	15	3	13	8	24	9	0	2	11	86
04:45 PM	13	4	20	37	2	0	5	7	6	7	10	23	9	1	1	11	78
Total	51	38	50	139	16	1	28	45	15	47	32	94	39	1	7	47	325
05:00 PM	12	8	20	40	2	0	9	11	7	11	7	25	5	1	3	9	85
05:15 PM	19	14	16	49	6	2	7	15	3	8	6	17	8	1	0	9	90
05:30 PM	11	5	16	32	2	3	6	11	4	11	5	20	10	4	7	21	84
05:45 PM	12	4	18	34	4	0	12	16	6	8	5	19	3	0	1	4	73
Total	54	31	70	155	14	5	34	53	20	38	23	81	26	6	11	43	332
Grand Total	105	69	120	294	30	6	62	98	35	85	55	175	65	7	18	90	657
Apprch %	35.7	23.5	40.8		30.6	6.1	63.3		20	48.6	31.4		72.2	7.8	20		
Total %	16	10.5	18.3	44.7	4.6	0.9	9.4	14.9	5.3	12.9	8.4	26.6	9.9	1.1	2.7	13.7	

	Milliken Avenue Southbound				Guasti Road Westbound				Milliken Avenue Northbound				Guasti Road Eastbound				
Start Time	Left	Thru	Right	App. Total	Left	Thru	Right	App. Total	Left	Thru	Right	App. Total	Left	Thru	Right	App. Total	Int. Total
Peak Hour Analysis From 04:30 PM to 05:15 PM - Peak 1 of 1																	
Peak Hour for Entire Intersection Begins at 04:30 PM																	
04:30 PM	14	9	13	36	5	1	**9**	**15**	3	**13**	8	24	**9**	0	2	**11**	86
04:45 PM	13	4	**20**	37	2	0	5	7	6	7	**10**	23	9	**1**	1	11	78
05:00 PM	12	8	20	40	2	0	9	11	**7**	11	7	**25**	5	1	**3**	9	85
05:15 PM	**19**	**14**	16	**49**	**6**	**2**	7	15	3	8	6	17	8	1	0	9	**90**
Total Volume	58	35	69	162	15	3	30	48	19	39	31	89	31	3	6	40	339
% App. Total	35.8	21.6	42.6		31.2	6.2	62.5		21.3	43.8	34.8		77.5	7.5	15		
PHF	.763	.625	.863	.827	.625	.375	.833	.800	.679	.750	.775	.890	.861	.750	.500	.909	.942

Counts Unlimited, Inc.
PO Box 1178
Corona, CA 92878
(951)268-6268

City of Ontario
N/S: Milliken Avenue
E/W: Guasti Road
Weather: Clear

File Name : 15_ONT_Mil_Gua PM
Site Code : 00322818
Start Date : 9/20/2022
Page No : 2

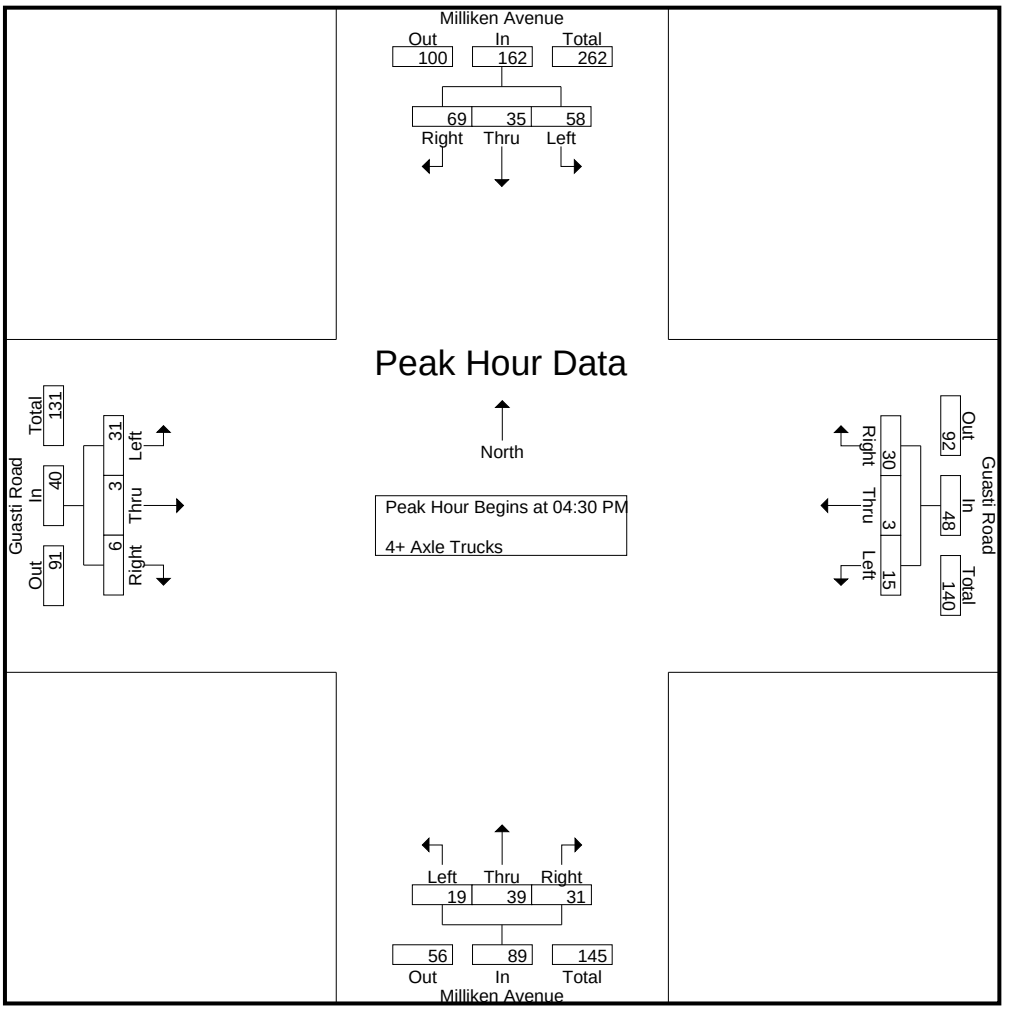

Peak Hour Analysis From 04:30 PM to 05:15 PM - Peak 1 of 1
Peak Hour for Each Approach Begins at:

	04:30 PM				04:30 PM				04:30 PM				04:30 PM			
+0 mins.	14	9	13	36	5	1	**9**	**15**	3	**13**	8	24	**9**	0	2	**11**
+15 mins.	13	4	**20**	37	2	0	5	7	6	7	**10**	23	9	**1**	1	11
+30 mins.	12	8	20	40	2	0	9	11	**7**	11	7	**25**	5	1	**3**	9
+45 mins.	**19**	**14**	16	**49**	**6**	**2**	7	15	3	8	6	17	8	1	0	9
Total Volume	58	35	69	162	15	3	30	48	19	39	31	89	31	3	6	40
% App. Total	35.8	21.6	42.6		31.2	6.2	62.5		21.3	43.8	34.8		77.5	7.5	15	
PHF	.763	.625	.863	.827	.625	.375	.833	.800	.679	.750	.775	.890	.861	.750	.500	.909

Location: Ontario
N/S: Milliken Avenue
E/W: Guasti Road

Date: 9/20/2022
Day: Tuesday

PEDESTRIANS

	North Leg Milliken Avenue	East Leg Guasti Road	South Leg Milliken Avenue	West Leg Guasti Road	
	Pedestrians	Pedestrians	Pedestrians	Pedestrians	
7:00 AM	0	1	0	0	1
7:15 AM	0	0	1	1	2
7:30 AM	3	1	0	0	4
7:45 AM	0	1	1	0	2
8:00 AM	3	0	0	0	3
8:15 AM	0	0	0	0	0
8:30 AM	0	0	0	0	0
8:45 AM	0	0	0	0	0
TOTAL VOLUMES:	6	3	2	1	12

	North Leg Milliken Avenue	East Leg Guasti Road	South Leg Milliken Avenue	West Leg Guasti Road	
	Pedestrians	Pedestrians	Pedestrians	Pedestrians	
4:00 PM	1	1	0	2	4
4:15 PM	2	0	0	0	2
4:30 PM	2	1	0	4	7
4:45 PM	3	0	0	0	3
5:00 PM	1	0	0	0	1
5:15 PM	6	1	0	1	8
5:30 PM	6	0	0	0	6
5:45 PM	3	1	0	2	6
TOTAL VOLUMES:	24	4	0	9	37

Counts Unlimited, Inc.
PO Box 1178
Corona, CA 92878
951-268-6268

Location: Ontario
N/S: Milliken Avenue
E/W: Guasti Road

Date: 9/20/2022
Day: Tuesday

BICYCLES

	Southbound Milliken Avenue			Westbound Guasti Road			Northbound Milliken Avenue			Eastbound Guasti Road			
	Left	Thru	Right	Left	Thru	Right	Left	Thru	Right	Left	Thru	Right	
7:00 AM	0	0	0	0	0	0	0	0	0	0	0	0	0
7:15 AM	0	0	0	0	0	0	0	0	0	0	0	0	0
7:30 AM	0	0	0	0	0	0	0	0	0	0	0	0	0
7:45 AM	0	0	0	0	0	0	0	0	0	0	0	0	0
8:00 AM	0	0	0	0	0	0	1	0	0	0	0	0	1
8:15 AM	0	1	0	0	0	0	0	1	0	0	0	0	2
8:30 AM	0	1	0	0	0	0	0	0	0	0	0	0	1
8:45 AM	0	1	0	0	0	0	0	0	0	0	0	0	1
TOTAL VOLUMES:	0	3	0	0	0	0	1	1	0	0	0	0	5

	Southbound Milliken Avenue			Westbound Guasti Road			Northbound Milliken Avenue			Eastbound Guasti Road			
	Left	Thru	Right	Left	Thru	Right	Left	Thru	Right	Left	Thru	Right	
4:00 PM	0	0	0	0	0	0	0	2	0	0	0	0	2
4:15 PM	0	0	0	0	0	0	1	1	0	0	0	0	2
4:30 PM	0	1	0	0	0	0	0	0	0	0	0	0	1
4:45 PM	0	0	0	0	0	0	0	0	0	0	0	0	0
5:00 PM	0	0	1	0	0	0	0	0	0	0	0	0	1
5:15 PM	0	0	0	0	0	0	0	0	0	0	0	0	0
5:30 PM	0	0	0	0	0	0	0	1	0	0	0	0	1
5:45 PM	0	0	0	0	0	0	0	0	0	0	0	0	0
TOTAL VOLUMES:	0	1	1	0	0	0	1	4	0	0	0	0	7

Counts Unlimited, Inc.
PO Box 1178
Corona, CA 92878
951-268-6268

Counts Unlimited, Inc.
PO Box 1178
Corona, CA 92878
(951)268-6268

City of Ontario
N/S: Driveway
E/W: Guasti Road
Weather: Clear

File Name : 16_ONT_DW_Gua AM
Site Code : 00322818
Start Date : 9/20/2022
Page No : 1

Groups Printed- Passenger Vehicles - Large 2 Axle Vehicles - 3 Axle Vehicles - 4+ Axle Trucks

	Driveway Southbound			Guasti Road Westbound			Guasti Road Eastbound			
Start Time	Left	Right	App. Total	Thru	Right	App. Total	Left	Thru	App. Total	Int. Total
07:00 AM	1	3	4	33	1	34	2	26	28	66
07:15 AM	1	7	8	27	3	30	9	18	27	65
07:30 AM	0	5	5	27	0	27	3	24	27	59
07:45 AM	4	2	6	20	2	22	7	31	38	66
Total	6	17	23	107	6	113	21	99	120	256
08:00 AM	2	7	9	32	2	34	7	22	29	72
08:15 AM	3	9	12	29	2	31	6	21	27	70
08:30 AM	0	7	7	34	1	35	3	26	29	71
08:45 AM	1	2	3	28	0	28	8	43	51	82
Total	6	25	31	123	5	128	24	112	136	295
Grand Total	12	42	54	230	11	241	45	211	256	551
Apprch %	22.2	77.8		95.4	4.6		17.6	82.4		
Total %	2.2	7.6	9.8	41.7	2	43.7	8.2	38.3	46.5	
Passenger Vehicles	7	32	39	33	9	42	39	102	141	222
% Passenger Vehicles	58.3	76.2	72.2	14.3	81.8	17.4	86.7	48.3	55.1	40.3
Large 2 Axle Vehicles	0	2	2	4	0	4	2	4	6	12
% Large 2 Axle Vehicles	0	4.8	3.7	1.7	0	1.7	4.4	1.9	2.3	2.2
3 Axle Vehicles	5	8	13	24	2	26	4	12	16	55
% 3 Axle Vehicles	41.7	19	24.1	10.4	18.2	10.8	8.9	5.7	6.2	10
4+ Axle Trucks	0	0	0	169	0	169	0	93	93	262
% 4+ Axle Trucks	0	0	0	73.5	0	70.1	0	44.1	36.3	47.5

	Driveway Southbound			Guasti Road Westbound			Guasti Road Eastbound			
Start Time	Left	Right	App. Total	Thru	Right	App. Total	Left	Thru	App. Total	Int. Total
Peak Hour Analysis From 07:00 AM to 08:45 AM - Peak 1 of 1										
Peak Hour for Entire Intersection Begins at 08:00 AM										
08:00 AM	2	7	9	32	**2**	34	7	22	29	72
08:15 AM	**3**	**9**	**12**	29	2	31	6	21	27	70
08:30 AM	0	7	7	**34**	1	**35**	3	26	29	71
08:45 AM	1	2	3	28	0	28	**8**	**43**	**51**	**82**
Total Volume	6	25	31	123	5	128	24	112	136	295
% App. Total	19.4	80.6		96.1	3.9		17.6	82.4		
PHF	.500	.694	.646	.904	.625	.914	.750	.651	.667	.899

Counts Unlimited, Inc.
PO Box 1178
Corona, CA 92878
(951)268-6268

City of Ontario
N/S: Driveway
E/W: Guasti Road
Weather: Clear

File Name : 16_ONT_DW_Gua AM
Site Code : 00322818
Start Date : 9/20/2022
Page No : 2

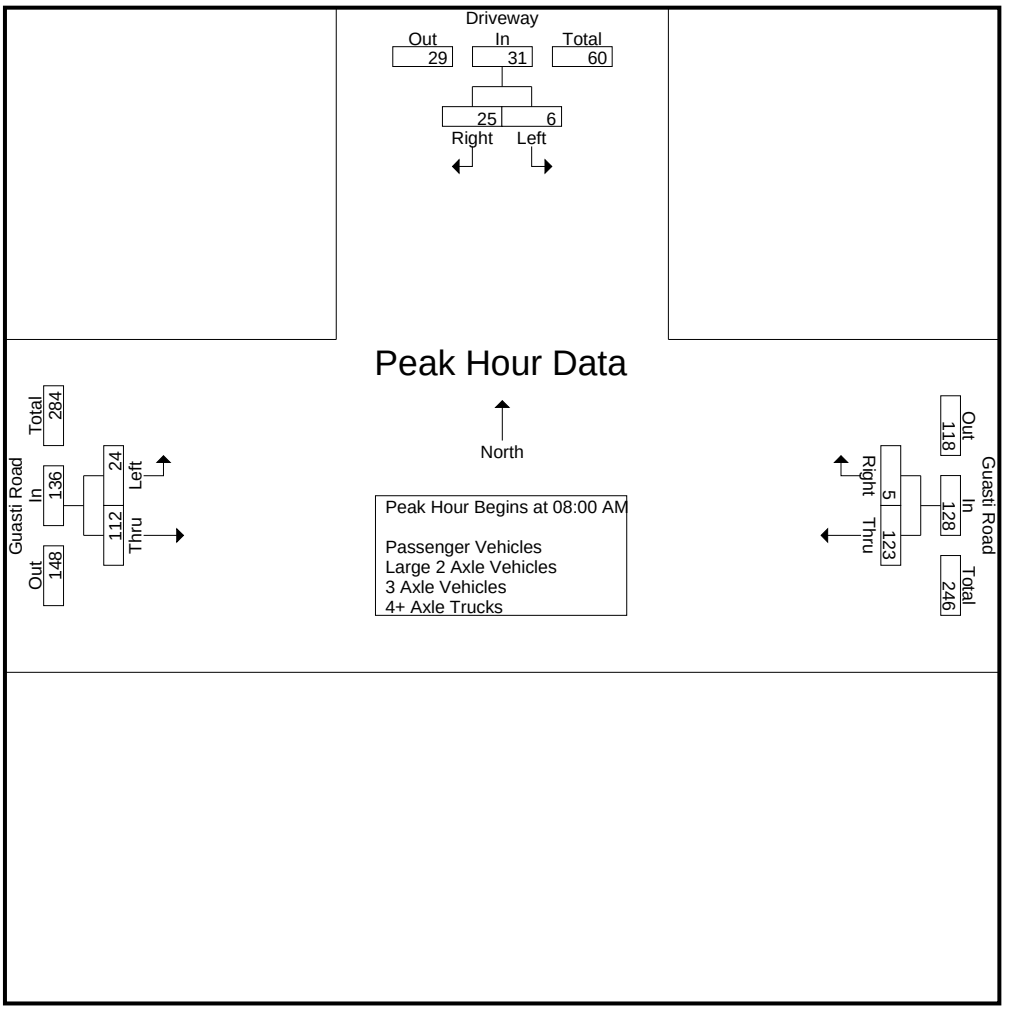

Peak Hour Analysis From 07:00 AM to 08:45 AM - Peak 1 of 1
Peak Hour for Each Approach Begins at:

	07:45 AM			08:00 AM			08:00 AM		
+0 mins.	**4**	2	6	32	**2**	34	7	22	29
+15 mins.	2	7	9	29	2	31	6	21	27
+30 mins.	3	**9**	**12**	**34**	1	**35**	3	26	29
+45 mins.	0	7	7	28	0	28	**8**	**43**	**51**
Total Volume	9	25	34	123	5	128	24	112	136
% App. Total	26.5	73.5		96.1	3.9		17.6	82.4	
PHF	.563	.694	.708	.904	.625	.914	.750	.651	.667

Counts Unlimited, Inc.
PO Box 1178
Corona, CA 92878
(951)268-6268

City of Ontario
N/S: Driveway
E/W: Guasti Road
Weather: Clear

File Name : 16_ONT_DW_Gua AM
Site Code : 00322818
Start Date : 9/20/2022
Page No : 1

Groups Printed- Passenger Vehicles

	Driveway Southbound			Guasti Road Westbound			Guasti Road Eastbound			
Start Time	Left	Right	App. Total	Thru	Right	App. Total	Left	Thru	App. Total	Int. Total
07:00 AM	1	3	4	5	1	6	2	15	17	27
07:15 AM	1	5	6	2	2	4	9	14	23	33
07:30 AM	0	4	4	2	0	2	3	15	18	24
07:45 AM	4	1	5	4	2	6	6	18	24	35
Total	6	13	19	13	5	18	20	62	82	119
08:00 AM	0	5	5	4	1	5	6	7	13	23
08:15 AM	1	8	9	3	2	5	4	9	13	27
08:30 AM	0	5	5	8	1	9	3	11	14	28
08:45 AM	0	1	1	5	0	5	6	13	19	25
Total	1	19	20	20	4	24	19	40	59	103
Grand Total	7	32	39	33	9	42	39	102	141	222
Apprch %	17.9	82.1		78.6	21.4		27.7	72.3		
Total %	3.2	14.4	17.6	14.9	4.1	18.9	17.6	45.9	63.5	

	Driveway Southbound			Guasti Road Westbound			Guasti Road Eastbound			
Start Time	Left	Right	App. Total	Thru	Right	App. Total	Left	Thru	App. Total	Int. Total
Peak Hour Analysis From 08:00 AM to 08:45 AM - Peak 1 of 1										
Peak Hour for Entire Intersection Begins at 08:00 AM										
08:00 AM	0	5	5	4	1	5	**6**	7	13	23
08:15 AM	**1**	**8**	**9**	3	**2**	5	4	9	13	27
08:30 AM	0	5	5	**8**	1	**9**	3	11	14	**28**
08:45 AM	0	1	1	5	0	5	6	**13**	**19**	25
Total Volume	1	19	20	20	4	24	19	40	59	103
% App. Total	5	95		83.3	16.7		32.2	67.8		
PHF	.250	.594	.556	.625	.500	.667	.792	.769	.776	.920

Counts Unlimited, Inc.
PO Box 1178
Corona, CA 92878
(951)268-6268

City of Ontario
N/S: Driveway
E/W: Guasti Road
Weather: Clear

File Name : 16_ONT_DW_Gua AM
Site Code : 00322818
Start Date : 9/20/2022
Page No : 2

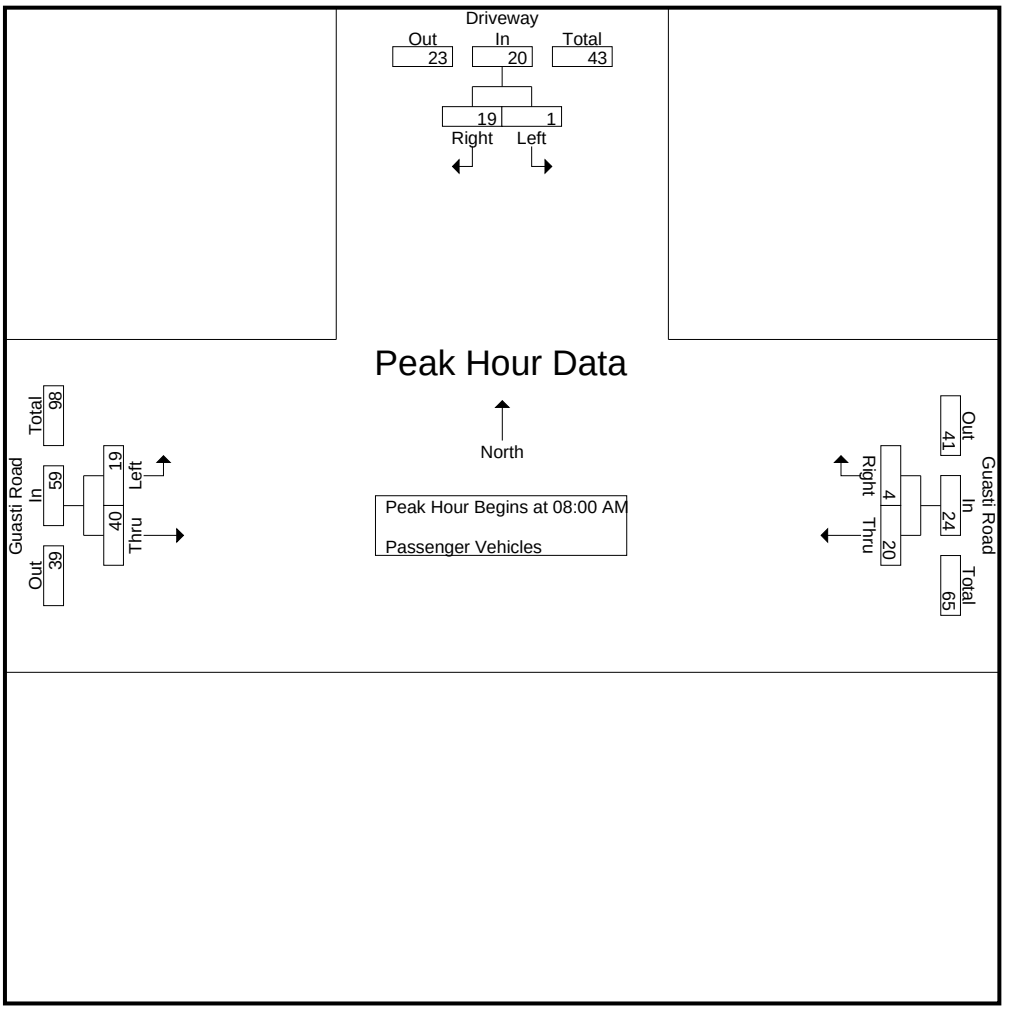

Peak Hour Analysis From 08:00 AM to 08:45 AM - Peak 1 of 1
Peak Hour for Each Approach Begins at:

	08:00 AM			08:00 AM			08:00 AM		
+0 mins.	0	5	5	4	1	5	**6**	7	13
+15 mins.	**1**	**8**	**9**	3	**2**	5	4	9	13
+30 mins.	0	5	5	**8**	1	**9**	3	11	14
+45 mins.	0	1	1	5	0	5	6	**13**	**19**
Total Volume	1	19	20	20	4	24	19	40	59
% App. Total	5	95		83.3	16.7		32.2	67.8	
PHF	.250	.594	.556	.625	.500	.667	.792	.769	.776

Counts Unlimited, Inc.
PO Box 1178
Corona, CA 92878
(951)268-6268

City of Ontario
N/S: Driveway
E/W: Guasti Road
Weather: Clear

File Name : 16_ONT_DW_Gua AM
Site Code : 00322818
Start Date : 9/20/2022
Page No : 1

Groups Printed- Large 2 Axle Vehicles

	Driveway Southbound			Guasti Road Westbound			Guasti Road Eastbound			
Start Time	Left	Right	App. Total	Thru	Right	App. Total	Left	Thru	App. Total	Int. Total
07:00 AM	0	0	0	1	0	1	0	1	1	2
07:15 AM	0	0	0	1	0	1	0	0	0	1
07:30 AM	0	0	0	0	0	0	0	0	0	0
07:45 AM	0	0	0	0	0	0	1	0	1	1
Total	0	0	0	2	0	2	1	1	2	4
08:00 AM	0	0	0	0	0	0	0	0	0	0
08:15 AM	0	0	0	1	0	1	1	0	1	2
08:30 AM	0	1	1	0	0	0	0	0	0	1
08:45 AM	0	1	1	1	0	1	0	3	3	5
Total	0	2	2	2	0	2	1	3	4	8
Grand Total	0	2	2	4	0	4	2	4	6	12
Apprch %	0	100		100	0		33.3	66.7		
Total %	0	16.7	16.7	33.3	0	33.3	16.7	33.3	50	

	Driveway Southbound			Guasti Road Westbound			Guasti Road Eastbound			
Start Time	Left	Right	App. Total	Thru	Right	App. Total	Left	Thru	App. Total	Int. Total
Peak Hour Analysis From 08:00 AM to 08:45 AM - Peak 1 of 1										
Peak Hour for Entire Intersection Begins at 08:00 AM										
08:00 AM	0	0	0	0	0	0	0	0	0	0
08:15 AM	0	0	0	**1**	0	**1**	**1**	0	1	2
08:30 AM	0	**1**	**1**	0	0	0	0	0	0	1
08:45 AM	0	1	1	1	0	1	0	**3**	**3**	**5**
Total Volume	0	2	2	2	0	2	1	3	4	8
% App. Total	0	100		100	0		25	75		
PHF	.000	.500	.500	.500	.000	.500	.250	.250	.333	.400

Counts Unlimited, Inc.
PO Box 1178
Corona, CA 92878
(951)268-6268

City of Ontario
N/S: Driveway
E/W: Guasti Road
Weather: Clear

File Name : 16_ONT_DW_Gua AM
Site Code : 00322818
Start Date : 9/20/2022
Page No : 2

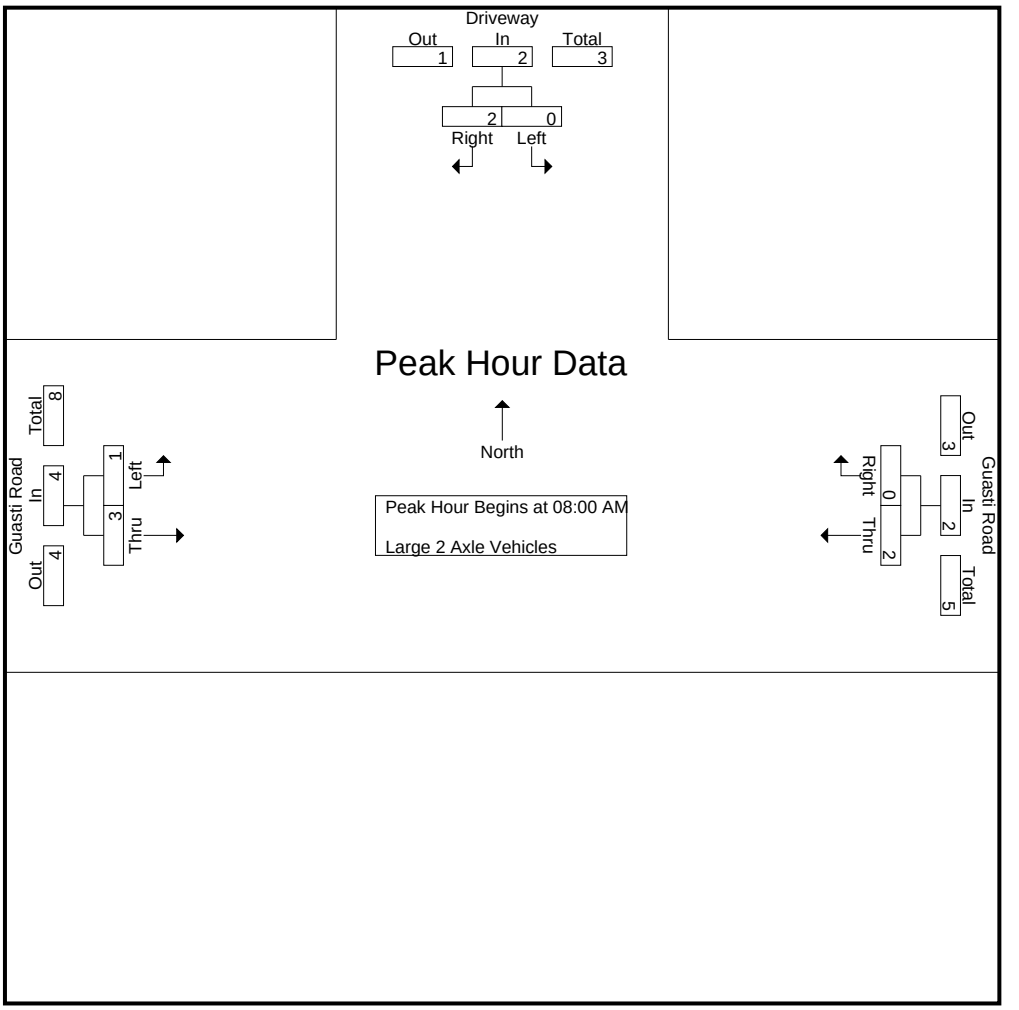

Peak Hour Analysis From 08:00 AM to 08:45 AM - Peak 1 of 1
Peak Hour for Each Approach Begins at:

	08:00 AM			08:00 AM			08:00 AM		
+0 mins.	0	0	0	0	0	0	0	0	0
+15 mins.	0	0	0	**1**	0	**1**	**1**	0	1
+30 mins.	0	**1**	**1**	0	0	0	0	0	0
+45 mins.	0	1	1	1	0	1	0	**3**	**3**
Total Volume	0	2	2	2	0	2	1	3	4
% App. Total	0	100		100	0		25	75	
PHF	.000	.500	.500	.500	.000	.500	.250	.250	.333

Counts Unlimited, Inc.
PO Box 1178
Corona, CA 92878
(951)268-6268

City of Ontario
N/S: Driveway
E/W: Guasti Road
Weather: Clear

File Name : 16_ONT_DW_Gua AM
Site Code : 00322818
Start Date : 9/20/2022
Page No : 1

Groups Printed- 3 Axle Vehicles

	Driveway Southbound			Guasti Road Westbound			Guasti Road Eastbound			
Start Time	Left	Right	App. Total	Thru	Right	App. Total	Left	Thru	App. Total	Int. Total
07:00 AM	0	0	0	1	0	1	0	2	2	3
07:15 AM	0	2	2	6	1	7	0	0	0	9
07:30 AM	0	1	1	3	0	3	0	1	1	5
07:45 AM	0	1	1	2	0	2	0	1	1	4
Total	0	4	4	12	1	13	0	4	4	21
08:00 AM	2	2	4	2	1	3	1	4	5	12
08:15 AM	2	1	3	3	0	3	1	1	2	8
08:30 AM	0	1	1	2	0	2	0	3	3	6
08:45 AM	1	0	1	5	0	5	2	0	2	8
Total	5	4	9	12	1	13	4	8	12	34
Grand Total	5	8	13	24	2	26	4	12	16	55
Apprch %	38.5	61.5		92.3	7.7		25	75		
Total %	9.1	14.5	23.6	43.6	3.6	47.3	7.3	21.8	29.1	

	Driveway Southbound			Guasti Road Westbound			Guasti Road Eastbound			
Start Time	Left	Right	App. Total	Thru	Right	App. Total	Left	Thru	App. Total	Int. Total
Peak Hour Analysis From 08:00 AM to 08:45 AM - Peak 1 of 1										
Peak Hour for Entire Intersection Begins at 08:00 AM										
08:00 AM	**2**	**2**	**4**	2	**1**	3	1	**4**	**5**	**12**
08:15 AM	2	1	3	3	0	3	1	1	2	8
08:30 AM	0	1	1	2	0	2	0	3	3	6
08:45 AM	1	0	1	**5**	0	**5**	**2**	0	2	8
Total Volume	5	4	9	12	1	13	4	8	12	34
% App. Total	55.6	44.4		92.3	7.7		33.3	66.7		
PHF	.625	.500	.563	.600	.250	.650	.500	.500	.600	.708

Counts Unlimited, Inc.
PO Box 1178
Corona, CA 92878
(951)268-6268

City of Ontario
N/S: Driveway
E/W: Guasti Road
Weather: Clear

File Name : 16_ONT_DW_Gua AM
Site Code : 00322818
Start Date : 9/20/2022
Page No : 2

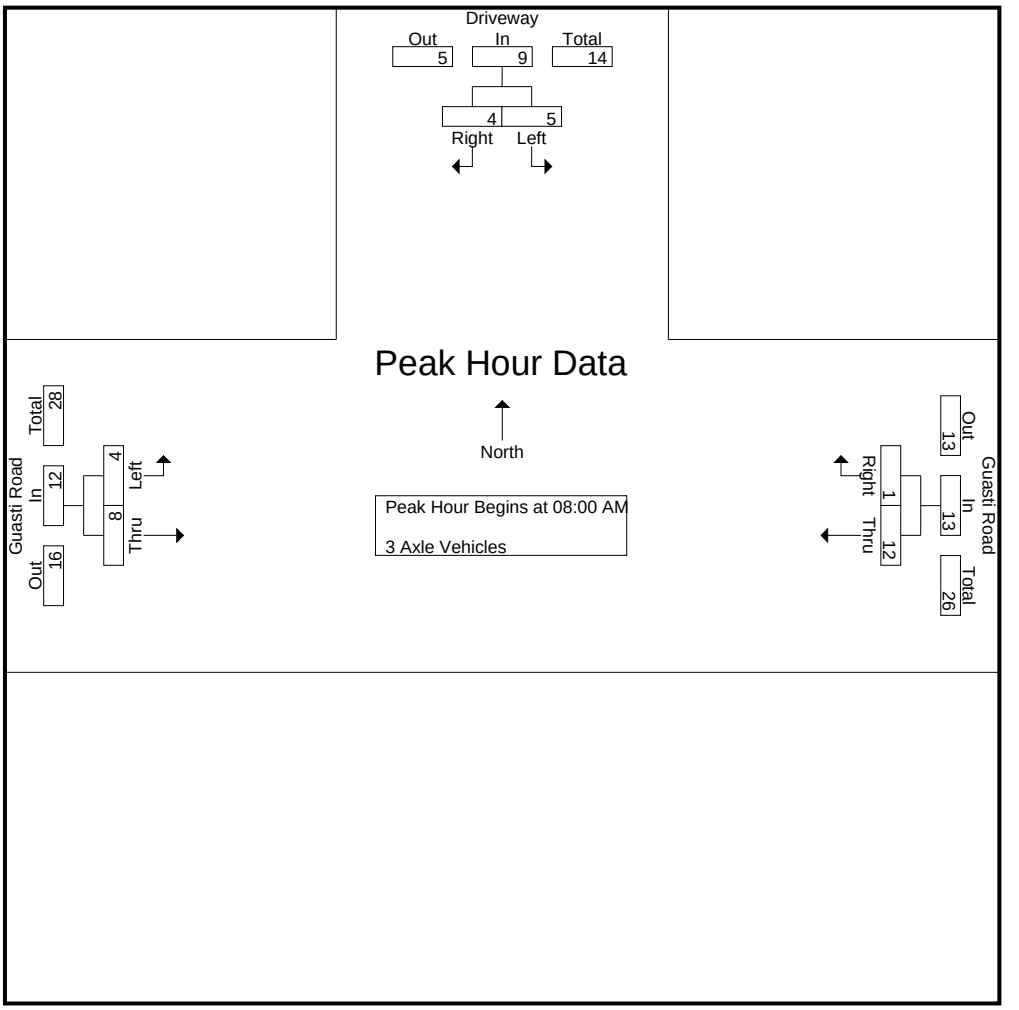

Peak Hour Analysis From 08:00 AM to 08:45 AM - Peak 1 of 1
Peak Hour for Each Approach Begins at:

	08:00 AM			08:00 AM			08:00 AM		
+0 mins.	**2**	**2**	**4**	2	**1**	3	1	**4**	**5**
+15 mins.	2	1	3	3	0	3	1	1	2
+30 mins.	0	1	1	2	0	2	0	3	3
+45 mins.	1	0	1	**5**	0	**5**	**2**	0	2
Total Volume	5	4	9	12	1	13	4	8	12
% App. Total	55.6	44.4		92.3	7.7		33.3	66.7	
PHF	.625	.500	.563	.600	.250	.650	.500	.500	.600

Counts Unlimited, Inc.
PO Box 1178
Corona, CA 92878
(951)268-6268

City of Ontario
N/S: Driveway
E/W: Guasti Road
Weather: Clear

File Name : 16_ONT_DW_Gua AM
Site Code : 00322818
Start Date : 9/20/2022
Page No : 1

Groups Printed- 4+ Axle Trucks

	Driveway Southbound			Guasti Road Westbound			Guasti Road Eastbound			
Start Time	Left	Right	App. Total	Thru	Right	App. Total	Left	Thru	App. Total	Int. Total
07:00 AM	0	0	0	26	0	26	0	8	8	34
07:15 AM	0	0	0	18	0	18	0	4	4	22
07:30 AM	0	0	0	22	0	22	0	8	8	30
07:45 AM	0	0	0	14	0	14	0	12	12	26
Total	0	0	0	80	0	80	0	32	32	112
08:00 AM	0	0	0	26	0	26	0	11	11	37
08:15 AM	0	0	0	22	0	22	0	11	11	33
08:30 AM	0	0	0	24	0	24	0	12	12	36
08:45 AM	0	0	0	17	0	17	0	27	27	44
Total	0	0	0	89	0	89	0	61	61	150
Grand Total	0	0	0	169	0	169	0	93	93	262
Apprch %	0	0		100	0		0	100		
Total %	0	0	0	64.5	0	64.5	0	35.5	35.5	

	Driveway Southbound			Guasti Road Westbound			Guasti Road Eastbound			
Start Time	Left	Right	App. Total	Thru	Right	App. Total	Left	Thru	App. Total	Int. Total
Peak Hour Analysis From 08:00 AM to 08:45 AM - Peak 1 of 1										
Peak Hour for Entire Intersection Begins at 08:00 AM										
08:00 AM	0	0	0	**26**	0	**26**	0	11	11	37
08:15 AM	0	0	0	22	0	22	0	11	11	33
08:30 AM	0	0	0	24	0	24	0	12	12	36
08:45 AM	0	0	0	17	0	17	0	**27**	**27**	**44**
Total Volume	0	0	0	89	0	89	0	61	61	150
% App. Total	0	0		100	0		0	100		
PHF	.000	.000	.000	.856	.000	.856	.000	.565	.565	.852

Counts Unlimited, Inc.
PO Box 1178
Corona, CA 92878
(951)268-6268

City of Ontario
N/S: Driveway
E/W: Guasti Road
Weather: Clear

File Name : 16_ONT_DW_Gua AM
Site Code : 00322818
Start Date : 9/20/2022
Page No : 2

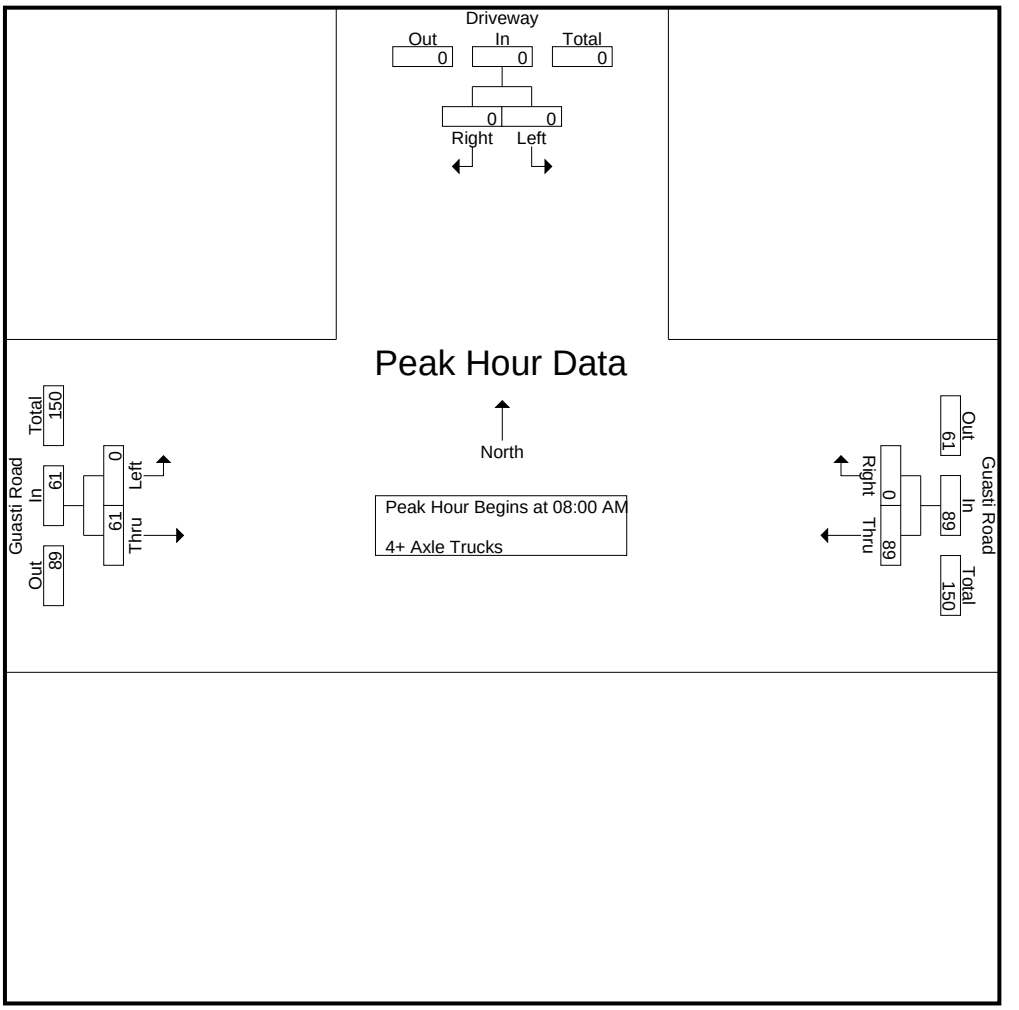

Peak Hour Analysis From 08:00 AM to 08:45 AM - Peak 1 of 1
Peak Hour for Each Approach Begins at:

	08:00 AM			08:00 AM			08:00 AM		
+0 mins.	0	0	0	**26**	0	**26**	0	11	11
+15 mins.	0	0	0	22	0	22	0	11	11
+30 mins.	0	0	0	24	0	24	0	12	12
+45 mins.	0	0	0	17	0	17	0	**27**	**27**
Total Volume	0	0	0	89	0	89	0	61	61
% App. Total	0	0		100	0		0	100	
PHF	.000	.000	.000	.856	.000	.856	.000	.565	.565

Counts Unlimited, Inc.
PO Box 1178
Corona, CA 92878
(951)268-6268

City of Ontario
N/S: Driveway
E/W: Guasti Road
Weather: Clear

File Name : 16_ONT_DW_Gua PM
Site Code : 00322818
Start Date : 9/20/2022
Page No : 1

Groups Printed- Passenger Vehicles - Large 2 Axle Vehicles - 3 Axle Vehicles - 4+ Axle Trucks

	Driveway Southbound			Guasti Road Westbound			Guasti Road Eastbound			
Start Time	Left	Right	App. Total	Thru	Right	App. Total	Left	Thru	App. Total	Int. Total
04:00 PM	2	9	11	20	1	21	5	41	46	78
04:15 PM	1	3	4	31	1	32	3	21	24	60
04:30 PM	0	5	5	30	2	32	9	30	39	76
04:45 PM	0	12	12	21	0	21	5	33	38	71
Total	3	29	32	102	4	106	22	125	147	285
05:00 PM	1	5	6	29	2	31	7	31	38	75
05:15 PM	2	9	11	32	0	32	8	28	36	79
05:30 PM	0	4	4	17	1	18	12	29	41	63
05:45 PM	2	10	12	37	1	38	7	26	33	83
Total	5	28	33	115	4	119	34	114	148	300
Grand Total	8	57	65	217	8	225	56	239	295	585
Apprch %	12.3	87.7		96.4	3.6		19	81		
Total %	1.4	9.7	11.1	37.1	1.4	38.5	9.6	40.9	50.4	
Passenger Vehicles	5	43	48	91	7	98	43	38	81	227
% Passenger Vehicles	62.5	75.4	73.8	41.9	87.5	43.6	76.8	15.9	27.5	38.8
Large 2 Axle Vehicles	0	0	0	10	0	10	0	12	12	22
% Large 2 Axle Vehicles	0	0	0	4.6	0	4.4	0	5	4.1	3.8
3 Axle Vehicles	3	13	16	17	1	18	11	25	36	70
% 3 Axle Vehicles	37.5	22.8	24.6	7.8	12.5	8	19.6	10.5	12.2	12
4+ Axle Trucks	0	1	1	99	0	99	2	164	166	266
% 4+ Axle Trucks	0	1.8	1.5	45.6	0	44	3.6	68.6	56.3	45.5

	Driveway Southbound			Guasti Road Westbound			Guasti Road Eastbound			
Start Time	Left	Right	App. Total	Thru	Right	App. Total	Left	Thru	App. Total	Int. Total
Peak Hour Analysis From 04:00 PM to 05:45 PM - Peak 1 of 1										
Peak Hour for Entire Intersection Begins at 04:30 PM										
04:30 PM	0	5	5	30	**2**	**32**	**9**	30	**39**	76
04:45 PM	0	**12**	**12**	21	0	21	5	**33**	38	71
05:00 PM	1	5	6	29	2	31	7	31	38	75
05:15 PM	**2**	9	11	**32**	0	32	8	28	36	**79**
Total Volume	3	31	34	112	4	116	29	122	151	301
% App. Total	8.8	91.2		96.6	3.4		19.2	80.8		
PHF	.375	.646	.708	.875	.500	.906	.806	.924	.968	.953

Counts Unlimited, Inc.
PO Box 1178
Corona, CA 92878
(951)268-6268

City of Ontario
N/S: Driveway
E/W: Guasti Road
Weather: Clear

File Name : 16_ONT_DW_Gua PM
Site Code : 00322818
Start Date : 9/20/2022
Page No : 2

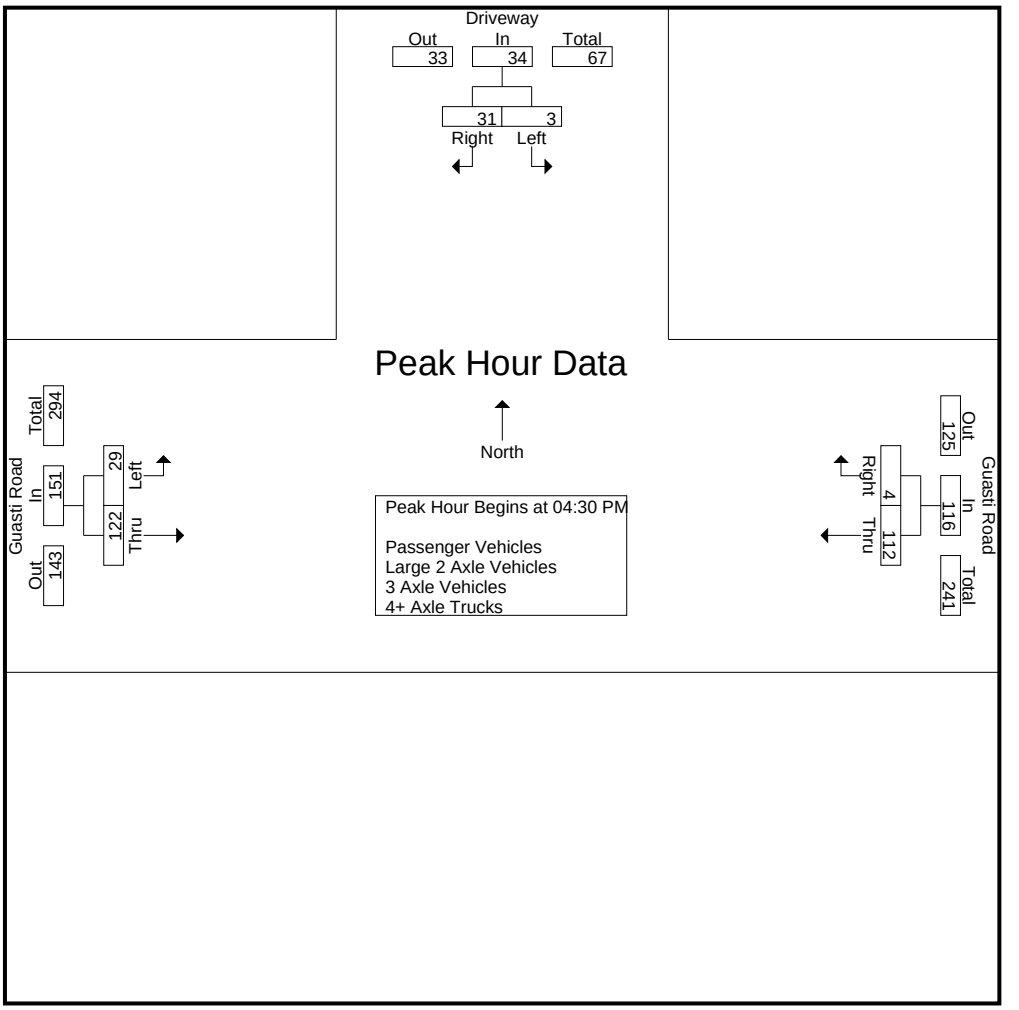

Peak Hour Analysis From 04:00 PM to 05:45 PM - Peak 1 of 1
Peak Hour for Each Approach Begins at:

	04:30 PM			05:00 PM			04:45 PM		
+0 mins.	0	5	5	29	**2**	31	5	**33**	38
+15 mins.	0	**12**	**12**	32	0	32	7	31	38
+30 mins.	1	5	6	17	1	18	8	28	36
+45 mins.	**2**	9	11	**37**	1	**38**	**12**	29	**41**
Total Volume	3	31	34	115	4	119	32	121	153
% App. Total	8.8	91.2		96.6	3.4		20.9	79.1	
PHF	.375	.646	.708	.777	.500	.783	.667	.917	.933

Counts Unlimited, Inc.
PO Box 1178
Corona, CA 92878
(951)268-6268

City of Ontario
N/S: Driveway
E/W: Guasti Road
Weather: Clear

File Name : 16_ONT_DW_Gua PM
Site Code : 00322818
Start Date : 9/20/2022
Page No : 1

Groups Printed- Passenger Vehicles

	Driveway Southbound			Guasti Road Westbound			Guasti Road Eastbound			
Start Time	Left	Right	App. Total	Thru	Right	App. Total	Left	Thru	App. Total	Int. Total
04:00 PM	2	5	7	8	1	9	4	10	14	30
04:15 PM	1	0	1	12	1	13	2	5	7	21
04:30 PM	0	5	5	16	2	18	9	6	15	38
04:45 PM	0	10	10	11	0	11	5	5	10	31
Total	3	20	23	47	4	51	20	26	46	120
05:00 PM	1	3	4	16	2	18	5	2	7	29
05:15 PM	1	9	10	8	0	8	6	1	7	25
05:30 PM	0	3	3	6	1	7	7	5	12	22
05:45 PM	0	8	8	14	0	14	5	4	9	31
Total	2	23	25	44	3	47	23	12	35	107
Grand Total	5	43	48	91	7	98	43	38	81	227
Apprch %	10.4	89.6		92.9	7.1		53.1	46.9		
Total %	2.2	18.9	21.1	40.1	3.1	43.2	18.9	16.7	35.7	

	Driveway Southbound			Guasti Road Westbound			Guasti Road Eastbound			
Start Time	Left	Right	App. Total	Thru	Right	App. Total	Left	Thru	App. Total	Int. Total
Peak Hour Analysis From 04:30 PM to 05:15 PM - Peak 1 of 1										
Peak Hour for Entire Intersection Begins at 04:30 PM										
04:30 PM	0	5	5	**16**	**2**	**18**	**9**	**6**	**15**	**38**
04:45 PM	0	**10**	**10**	11	0	11	5	5	10	31
05:00 PM	**1**	3	4	16	2	18	5	2	7	29
05:15 PM	1	9	10	8	0	8	6	1	7	25
Total Volume	2	27	29	51	4	55	25	14	39	123
% App. Total	6.9	93.1		92.7	7.3		64.1	35.9		
PHF	.500	.675	.725	.797	.500	.764	.694	.583	.650	.809

Counts Unlimited, Inc.
PO Box 1178
Corona, CA 92878
(951)268-6268

City of Ontario
N/S: Driveway
E/W: Guasti Road
Weather: Clear

File Name : 16_ONT_DW_Gua PM
Site Code : 00322818
Start Date : 9/20/2022
Page No : 2

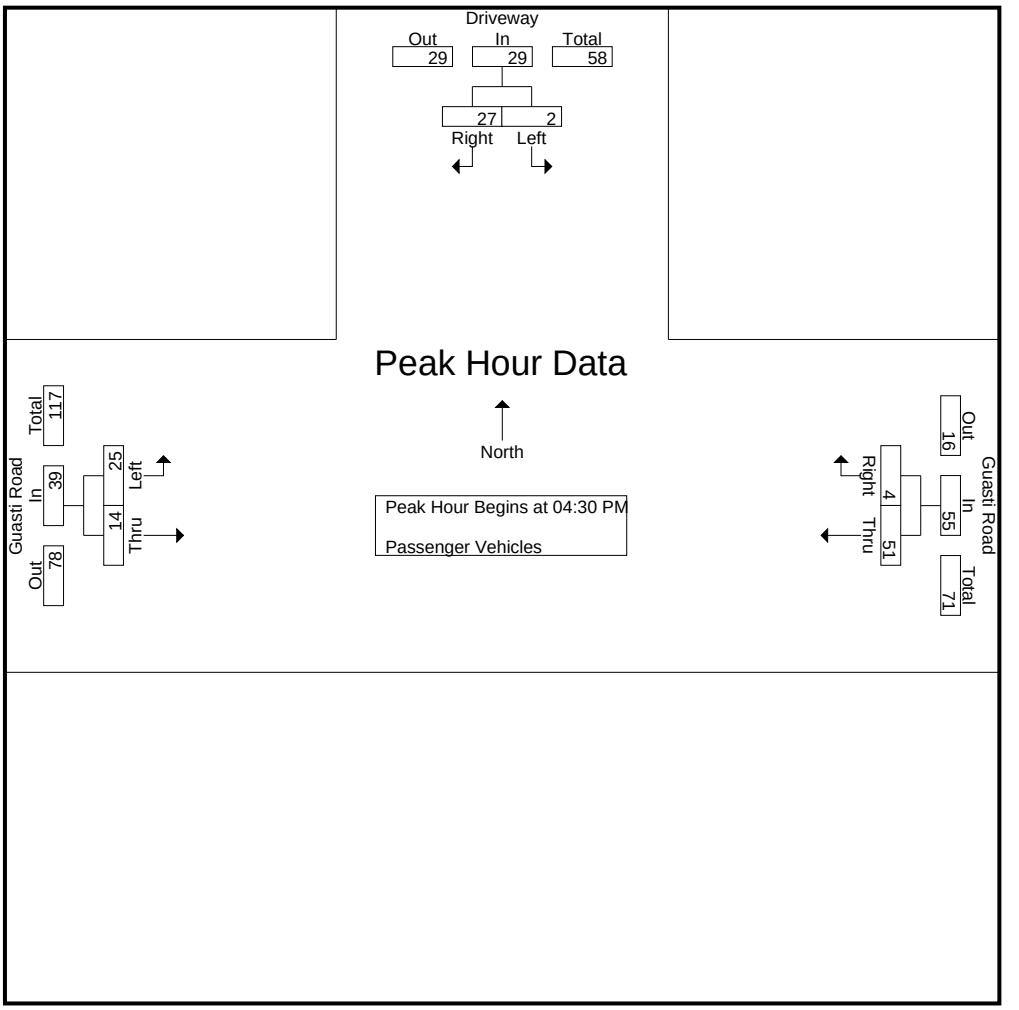

Peak Hour Analysis From 04:30 PM to 05:15 PM - Peak 1 of 1
Peak Hour for Each Approach Begins at:

	04:30 PM			04:30 PM			04:30 PM		
+0 mins.	0	5	5	**16**	**2**	**18**	**9**	**6**	**15**
+15 mins.	0	**10**	**10**	11	0	11	5	5	10
+30 mins.	**1**	3	4	16	2	18	5	2	7
+45 mins.	1	9	10	8	0	8	6	1	7
Total Volume	2	27	29	51	4	55	25	14	39
% App. Total	6.9	93.1		92.7	7.3		64.1	35.9	
PHF	.500	.675	.725	.797	.500	.764	.694	.583	.650

Counts Unlimited, Inc.
PO Box 1178
Corona, CA 92878
(951)268-6268

City of Ontario
N/S: Driveway
E/W: Guasti Road
Weather: Clear

File Name : 16_ONT_DW_Gua PM
Site Code : 00322818
Start Date : 9/20/2022
Page No : 1

Groups Printed- Large 2 Axle Vehicles

	Driveway Southbound			Guasti Road Westbound			Guasti Road Eastbound			
Start Time	Left	Right	App. Total	Thru	Right	App. Total	Left	Thru	App. Total	Int. Total
04:00 PM	0	0	0	0	0	0	0	5	5	5
04:15 PM	0	0	0	3	0	3	0	1	1	4
04:30 PM	0	0	0	0	0	0	0	1	1	1
04:45 PM	0	0	0	1	0	1	0	0	0	1
Total	0	0	0	4	0	4	0	7	7	11
05:00 PM	0	0	0	1	0	1	0	2	2	3
05:15 PM	0	0	0	3	0	3	0	0	0	3
05:30 PM	0	0	0	0	0	0	0	1	1	1
05:45 PM	0	0	0	2	0	2	0	2	2	4
Total	0	0	0	6	0	6	0	5	5	11
Grand Total	0	0	0	10	0	10	0	12	12	22
Apprch %	0	0		100	0		0	100		
Total %	0	0	0	45.5	0	45.5	0	54.5	54.5	

	Driveway Southbound			Guasti Road Westbound			Guasti Road Eastbound			
Start Time	Left	Right	App. Total	Thru	Right	App. Total	Left	Thru	App. Total	Int. Total
Peak Hour Analysis From 04:30 PM to 05:15 PM - Peak 1 of 1										
Peak Hour for Entire Intersection Begins at 04:30 PM										
04:30 PM	0	0	0	0	0	0	0	1	1	1
04:45 PM	0	0	0	1	0	1	0	0	0	1
05:00 PM	0	0	0	1	0	1	0	**2**	**2**	**3**
05:15 PM	0	0	0	**3**	0	**3**	0	0	0	3
Total Volume	0	0	0	5	0	5	0	3	3	8
% App. Total	0	0		100	0		0	100		
PHF	.000	.000	.000	.417	.000	.417	.000	.375	.375	.667

Counts Unlimited, Inc.
PO Box 1178
Corona, CA 92878
(951)268-6268

City of Ontario
N/S: Driveway
E/W: Guasti Road
Weather: Clear

File Name : 16_ONT_DW_Gua PM
Site Code : 00322818
Start Date : 9/20/2022
Page No : 2

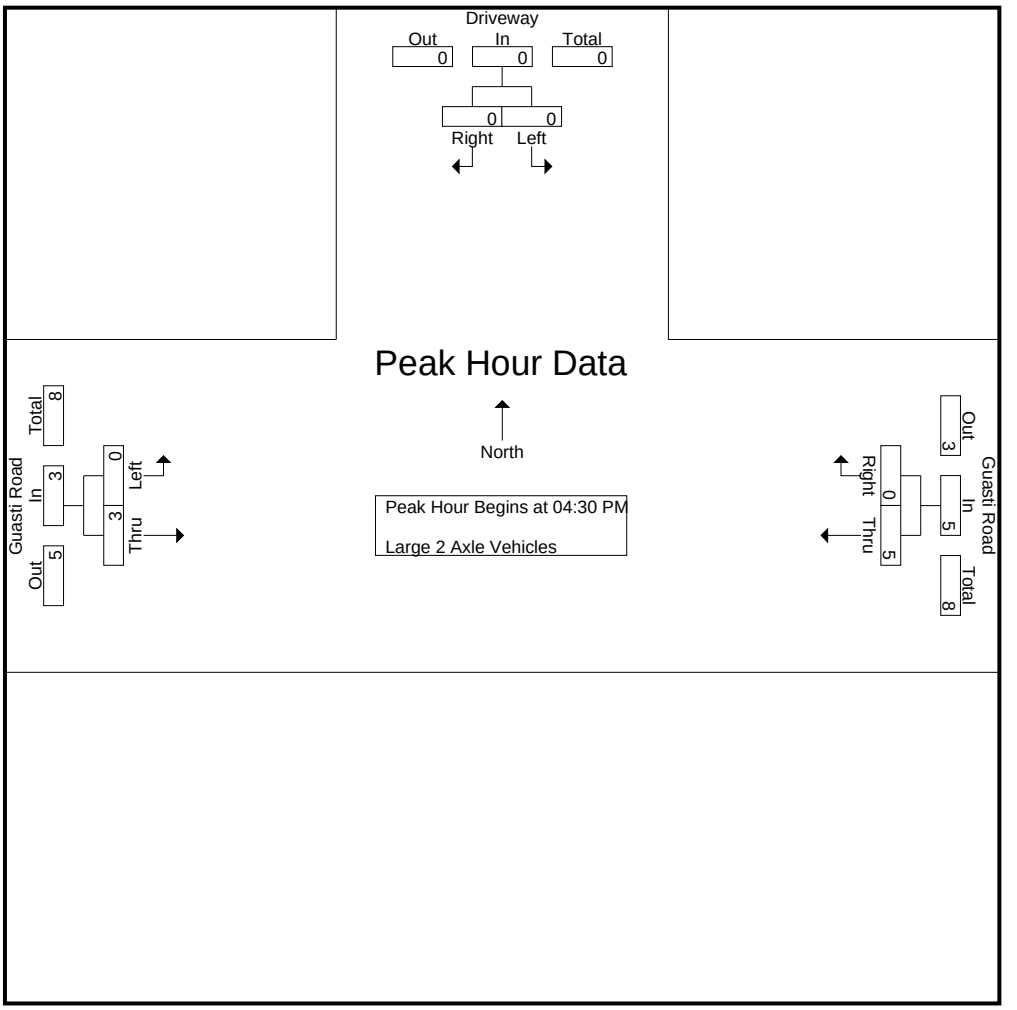

Peak Hour Analysis From 04:30 PM to 05:15 PM - Peak 1 of 1
Peak Hour for Each Approach Begins at:

	04:30 PM			04:30 PM			04:30 PM		
+0 mins.	0	0	0	0	0	0	0	1	1
+15 mins.	0	0	0	1	0	1	0	0	0
+30 mins.	0	0	0	1	0	1	0	**2**	**2**
+45 mins.	0	0	0	**3**	0	**3**	0	0	0
Total Volume	0	0	0	5	0	5	0	3	3
% App. Total	0	0		100	0		0	100	
PHF	.000	.000	.000	.417	.000	.417	.000	.375	.375

Counts Unlimited, Inc.
PO Box 1178
Corona, CA 92878
(951)268-6268

City of Ontario
N/S: Driveway
E/W: Guasti Road
Weather: Clear

File Name : 16_ONT_DW_Gua PM
Site Code : 00322818
Start Date : 9/20/2022
Page No : 1

Groups Printed- 3 Axle Vehicles

	Driveway Southbound			Guasti Road Westbound			Guasti Road Eastbound			
Start Time	Left	Right	App. Total	Thru	Right	App. Total	Left	Thru	App. Total	Int. Total
04:00 PM	0	3	3	3	0	3	0	2	2	8
04:15 PM	0	3	3	3	0	3	1	2	3	9
04:30 PM	0	0	0	0	0	0	0	1	1	1
04:45 PM	0	2	2	2	0	2	0	4	4	8
Total	0	8	8	8	0	8	1	9	10	26
05:00 PM	0	2	2	0	0	0	2	7	9	11
05:15 PM	1	0	1	7	0	7	2	2	4	12
05:30 PM	0	1	1	0	0	0	5	3	8	9
05:45 PM	2	2	4	2	1	3	1	4	5	12
Total	3	5	8	9	1	10	10	16	26	44
Grand Total	3	13	16	17	1	18	11	25	36	70
Apprch %	18.8	81.2		94.4	5.6		30.6	69.4		
Total %	4.3	18.6	22.9	24.3	1.4	25.7	15.7	35.7	51.4	

	Driveway Southbound			Guasti Road Westbound			Guasti Road Eastbound			
Start Time	Left	Right	App. Total	Thru	Right	App. Total	Left	Thru	App. Total	Int. Total
Peak Hour Analysis From 04:30 PM to 05:15 PM - Peak 1 of 1										
Peak Hour for Entire Intersection Begins at 04:30 PM										
04:30 PM	0	0	0	0	0	0	0	1	1	1
04:45 PM	0	**2**	**2**	2	0	2	0	4	4	8
05:00 PM	0	2	2	0	0	0	**2**	**7**	**9**	11
05:15 PM	**1**	0	1	**7**	0	**7**	2	2	4	**12**
Total Volume	1	4	5	9	0	9	4	14	18	32
% App. Total	20	80		100	0		22.2	77.8		
PHF	.250	.500	.625	.321	.000	.321	.500	.500	.500	.667

Counts Unlimited, Inc.
PO Box 1178
Corona, CA 92878
(951)268-6268

City of Ontario
N/S: Driveway
E/W: Guasti Road
Weather: Clear

File Name : 16_ONT_DW_Gua PM
Site Code : 00322818
Start Date : 9/20/2022
Page No : 2

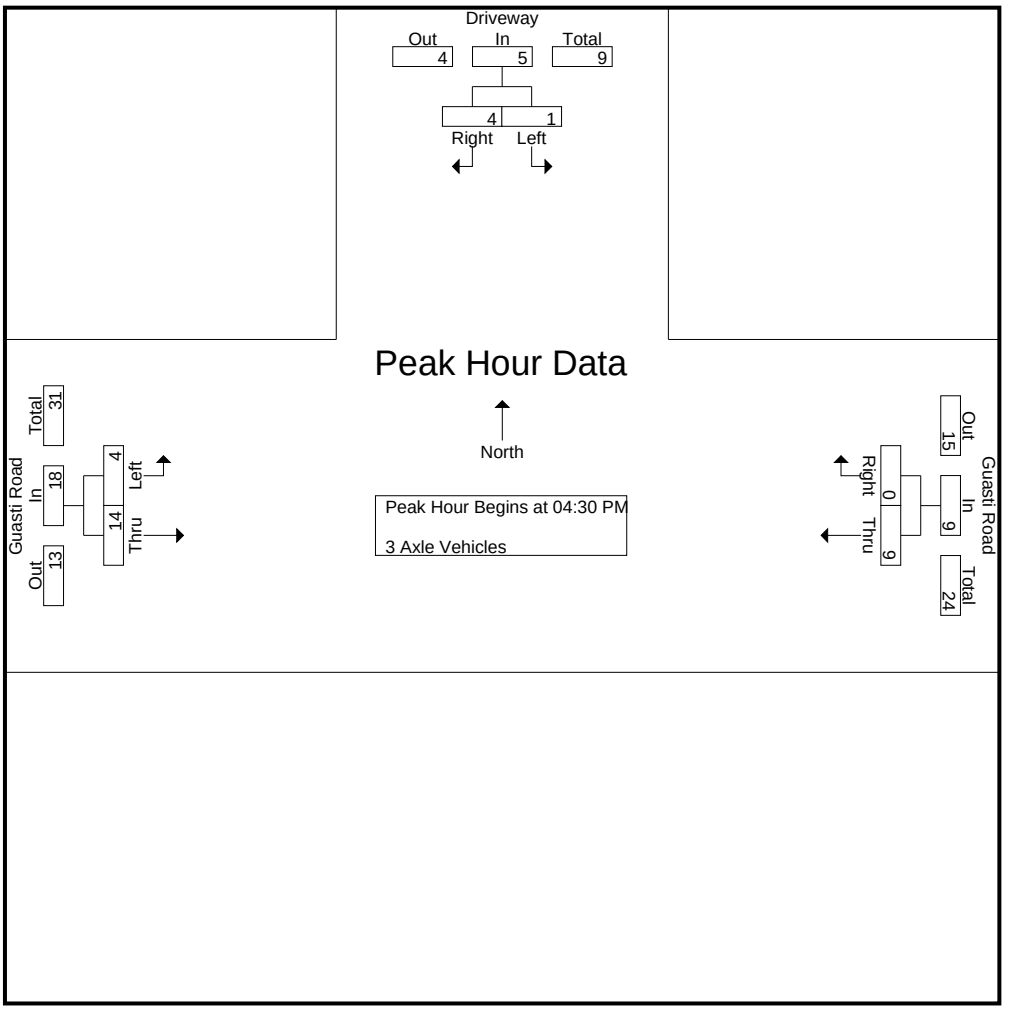

Peak Hour Analysis From 04:30 PM to 05:15 PM - Peak 1 of 1
Peak Hour for Each Approach Begins at:

	04:30 PM			04:30 PM			04:30 PM		
+0 mins.	0	0	0	0	0	0	0	1	1
+15 mins.	0	**2**	**2**	2	0	2	0	4	4
+30 mins.	0	2	2	0	0	0	**2**	**7**	**9**
+45 mins.	**1**	0	1	**7**	0	**7**	2	2	4
Total Volume	1	4	5	9	0	9	4	14	18
% App. Total	20	80		100	0		22.2	77.8	
PHF	.250	.500	.625	.321	.000	.321	.500	.500	.500

Counts Unlimited, Inc.
PO Box 1178
Corona, CA 92878
(951)268-6268

City of Ontario
N/S: Driveway
E/W: Guasti Road
Weather: Clear

File Name : 16_ONT_DW_Gua PM
Site Code : 00322818
Start Date : 9/20/2022
Page No : 1

Groups Printed- 4+ Axle Trucks

	Driveway Southbound			Guasti Road Westbound			Guasti Road Eastbound			
Start Time	Left	Right	App. Total	Thru	Right	App. Total	Left	Thru	App. Total	Int. Total
04:00 PM	0	1	1	9	0	9	1	24	25	35
04:15 PM	0	0	0	13	0	13	0	13	13	26
04:30 PM	0	0	0	14	0	14	0	22	22	36
04:45 PM	0	0	0	7	0	7	0	24	24	31
Total	0	1	1	43	0	43	1	83	84	128
05:00 PM	0	0	0	12	0	12	0	20	20	32
05:15 PM	0	0	0	14	0	14	0	25	25	39
05:30 PM	0	0	0	11	0	11	0	20	20	31
05:45 PM	0	0	0	19	0	19	1	16	17	36
Total	0	0	0	56	0	56	1	81	82	138
Grand Total	0	1	1	99	0	99	2	164	166	266
Apprch %	0	100		100	0		1.2	98.8		
Total %	0	0.4	0.4	37.2	0	37.2	0.8	61.7	62.4	

	Driveway Southbound			Guasti Road Westbound			Guasti Road Eastbound			
Start Time	Left	Right	App. Total	Thru	Right	App. Total	Left	Thru	App. Total	Int. Total
Peak Hour Analysis From 04:30 PM to 05:15 PM - Peak 1 of 1										
Peak Hour for Entire Intersection Begins at 04:30 PM										
04:30 PM	0	0	0	**14**	0	**14**	0	22	22	36
04:45 PM	0	0	0	7	0	7	0	24	24	31
05:00 PM	0	0	0	12	0	12	0	20	20	32
05:15 PM	0	0	0	14	0	14	0	**25**	**25**	**39**
Total Volume	0	0	0	47	0	47	0	91	91	138
% App. Total	0	0		100	0		0	100		
PHF	.000	.000	.000	.839	.000	.839	.000	.910	.910	.885

Counts Unlimited, Inc.
PO Box 1178
Corona, CA 92878
(951)268-6268

City of Ontario
N/S: Driveway
E/W: Guasti Road
Weather: Clear

File Name : 16_ONT_DW_Gua PM
Site Code : 00322818
Start Date : 9/20/2022
Page No : 2

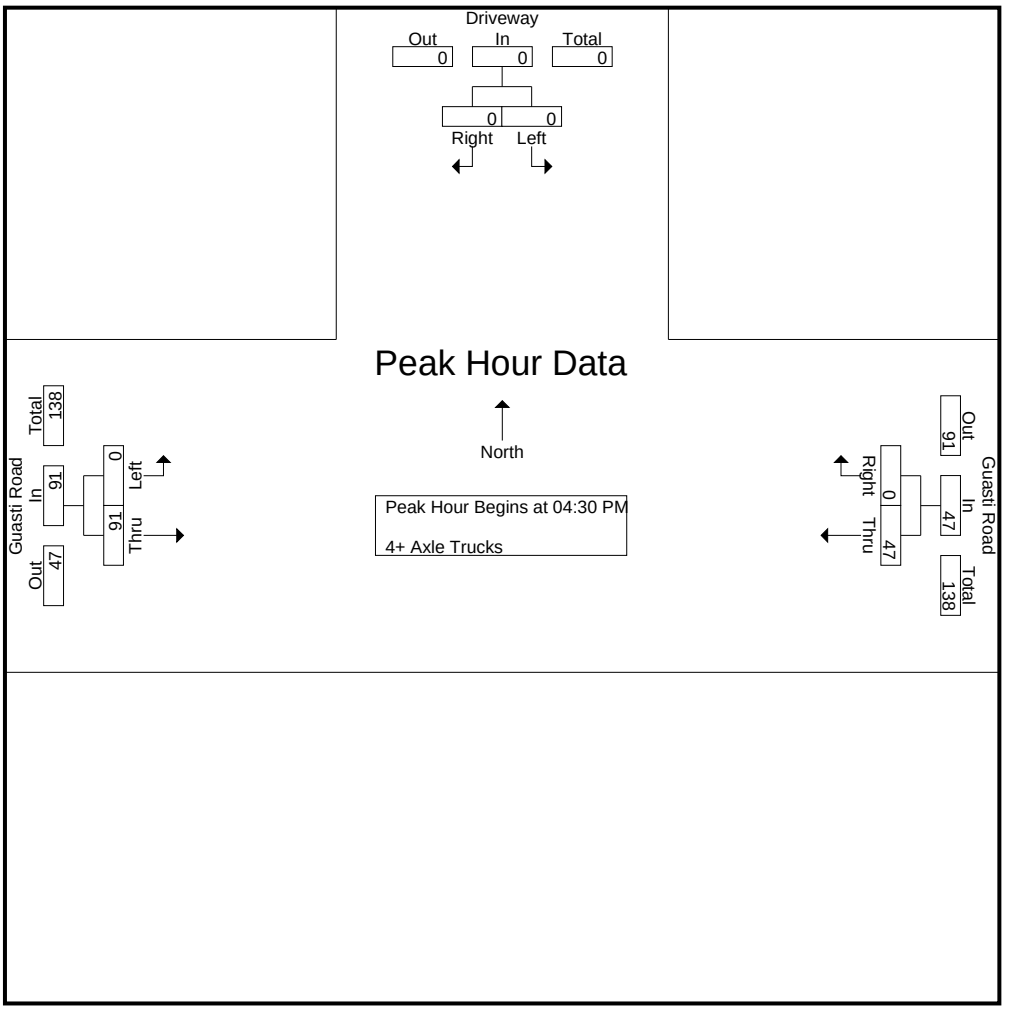

Peak Hour Analysis From 04:30 PM to 05:15 PM - Peak 1 of 1
Peak Hour for Each Approach Begins at:

	04:30 PM			04:30 PM			04:30 PM		
+0 mins.	0	0	0	**14**	0	**14**	0	22	22
+15 mins.	0	0	0	7	0	7	0	24	24
+30 mins.	0	0	0	12	0	12	0	20	20
+45 mins.	0	0	0	14	0	14	0	**25**	**25**
Total Volume	0	0	0	47	0	47	0	91	91
% App. Total	0	0		100	0		0	100	
PHF	.000	.000	.000	.839	.000	.839	.000	.910	.910

Location: Ontario
N/S: Driveway
E/W: Guasti Road

Date: 9/20/2022
Day: Tuesday

PEDESTRIANS

	North Leg Driveway	East Leg Guasti Road	South Leg Dead End	West Leg Guasti Road	
	Pedestrians	Pedestrians	Pedestrians	Pedestrians	
7:00 AM	1	0	0	1	2
7:15 AM	0	0	0	1	1
7:30 AM	0	1	0	0	1
7:45 AM	0	0	0	0	0
8:00 AM	0	0	0	1	1
8:15 AM	0	1	0	0	1
8:30 AM	0	0	0	0	0
8:45 AM	0	2	0	2	4
TOTAL VOLUMES:	1	4	0	5	10

	North Leg Driveway	East Leg Guasti Road	South Leg Dead End	West Leg Guasti Road	
	Pedestrians	Pedestrians	Pedestrians	Pedestrians	
4:00 PM	0	0	0	0	0
4:15 PM	2	0	0	0	2
4:30 PM	0	1	0	1	2
4:45 PM	1	1	0	0	2
5:00 PM	0	0	0	0	0
5:15 PM	0	1	0	0	1
5:30 PM	1	0	0	1	2
5:45 PM	1	0	0	0	1
TOTAL VOLUMES:	5	3	0	2	10

Counts Unlimited, Inc.
PO Box 1178
Corona, CA 92878
951-268-6268

Location: Ontario
N/S: Driveway
E/W: Guasti Road

Date: 9/20/2022
Day: Tuesday

BICYCLES

	Southbound Driveway			Westbound Guasti Road			Northbound Dead End			Eastbound Guasti Road			
	Left	Thru	Right	Left	Thru	Right	Left	Thru	Right	Left	Thru	Right	
7:00 AM	0	0	0	0	0	0	0	0	0	0	0	0	0
7:15 AM	0	0	0	0	0	0	0	0	0	0	0	0	0
7:30 AM	0	0	0	0	0	0	0	0	0	0	0	0	0
7:45 AM	0	0	0	0	0	0	0	0	0	0	0	0	0
8:00 AM	0	0	0	0	0	0	0	0	0	0	0	0	0
8:15 AM	0	0	0	0	0	0	0	0	0	0	0	0	0
8:30 AM	0	0	0	0	0	0	0	0	0	0	0	0	0
8:45 AM	0	0	0	0	0	0	0	0	0	0	0	0	0
TOTAL VOLUMES:	0	0	0	0	0	0	0	0	0	0	0	0	0

	Southbound Driveway			Westbound Guasti Road			Northbound Dead End			Eastbound Guasti Road			
	Left	Thru	Right	Left	Thru	Right	Left	Thru	Right	Left	Thru	Right	
4:00 PM	0	0	0	0	0	0	0	0	0	0	0	0	0
4:15 PM	0	0	0	0	0	0	0	0	0	0	0	0	0
4:30 PM	0	0	0	0	0	0	0	0	0	0	0	0	0
4:45 PM	0	0	0	0	0	0	0	0	0	0	0	0	0
5:00 PM	0	0	0	0	0	0	0	0	0	0	0	0	0
5:15 PM	0	0	0	0	0	0	0	0	0	0	0	0	0
5:30 PM	0	0	0	0	0	0	0	0	0	0	0	0	0
5:45 PM	0	0	0	0	0	0	0	0	0	0	0	0	0
TOTAL VOLUMES:	0	0	0	0	0	0	0	0	0	0	0	0	0

Counts Unlimited, Inc.
PO Box 1178
Corona, CA 92878
951-268-6268

APPENDIX D1

Table D-1 - Existing Peak Hour PCE Volume Summary

		AM Peak Hour	PM Peak Hour
		Existing No Build Volumes	Existing No Build Volumes
1	**East Terminal Way/Airport Drive [West]**		
NBL		29	36
NBT		0	0
NBR		11	37
SBL		0	0
SBT		0	0
SBR		0	0
EBL		0	0
EBT		772	1,478
EBR		70	107
WBL		66	61
WBT		715	772
WBR		0	0
North Leg			
	Approach	0	0
	Departure	0	0
	Total	0	0
South Leg			
	Approach	40	73
	Departure	136	168
	Total	176	241
East Leg			
	Approach	781	833
	Departure	783	1,515
	Total	1,564	2,348
West Leg			
	Approach	842	1,585
	Departure	744	808
	Total	1,586	2,393
Total Approaches			
	Approach	1,663	2,491
	Departure	1,663	2,491
	Total	3,326	4,982

Table D-1 - Existing Peak Hour PCE Volume Summary

		AM Peak Hour	PM Peak Hour
		Existing No Build Volumes	Existing No Build Volumes
2	**Archibald Avenue - Terminal Way/Airport Drive**		
NBL		18	12
NBT		30	74
NBR		12	49
SBL		258	405
SBT		108	98
SBR		409	366
EBL		426	739
EBT		337	759
EBR		20	17
WBL		54	56
WBT		354	455
WBR		358	500
North Leg			
	Approach	775	869
	Departure	814	1,313
	Total	1,589	2,182
South Leg			
	Approach	60	135
	Departure	182	171
	Total	242	306
East Leg			
	Approach	766	1,011
	Departure	607	1,213
	Total	1,373	2,224
West Leg			
	Approach	783	1,515
	Departure	781	833
	Total	1,564	2,348
Total Approaches			
	Approach	2,384	3,530
	Departure	2,384	3,530
	Total	4,768	7,060

Table D-1 - Existing Peak Hour PCE Volume Summary

		AM Peak Hour	PM Peak Hour
		Existing No Build Volumes	Existing No Build Volumes
3	**East Terminal Way/Airport Drive [East]**		
NBL		74	125
NBT		0	0
NBR		98	219
SBL		0	0
SBT		0	0
SBR		0	0
EBL		0	0
EBT		598	1,206
EBR		9	7
WBL		74	65
WBT		692	886
WBR		0	0
North Leg			
	Approach	0	0
	Departure	0	0
	Total	0	0
South Leg			
	Approach	172	344
	Departure	83	72
	Total	255	416
East Leg			
	Approach	766	951
	Departure	696	1,425
	Total	1,462	2,376
West Leg			
	Approach	607	1,213
	Departure	766	1,011
	Total	1,373	2,224
Total Approaches			
	Approach	1,545	2,508
	Departure	1,545	2,508
	Total	3,090	5,016

Table D-1 - Existing Peak Hour PCE Volume Summary

		AM Peak Hour	PM Peak Hour
		Existing No Build Volumes	Existing No Build Volumes
4	**Rental Car Road/Airport Drive**		
NBL		67	62
NBT		0	0
NBR		56	70
SBL		0	0
SBT		0	0
SBR		0	0
EBL		0	0
EBT		652	1,397
EBR		44	28
WBL		70	57
WBT		699	889
WBR		0	0
North Leg			
	Approach	0	0
	Departure	0	0
	Total	0	0
South Leg			
	Approach	123	132
	Departure	114	85
	Total	237	217
East Leg			
	Approach	769	946
	Departure	708	1,467
	Total	1,477	2,413
West Leg			
	Approach	696	1,425
	Departure	766	951
	Total	1,462	2,376
Total Approaches			
	Approach	1,588	2,503
	Departure	1,588	2,503
	Total	3,176	5,006

Table D-1 - Existing Peak Hour PCE Volume Summary

		AM Peak Hour	PM Peak Hour
		Existing No Build Volumes	Existing No Build Volumes
5	**Milliken Avenue/Azusa Court**		
NBL		0	0
NBT		830	1,870
NBR		0	0
SBL		0	0
SBT		1,115	967
SBR		62	28
EBL		0	0
EBT		0	0
EBR		14	39
WBL		0	0
WBT		0	0
WBR		0	0
North Leg			
	Approach	1,177	995
	Departure	830	1,870
	Total	2,007	2,865
South Leg			
	Approach	830	1,870
	Departure	1,129	1,006
	Total	1,959	2,876
East Leg			
	Approach	0	0
	Departure	0	0
	Total	0	0
West Leg			
	Approach	14	39
	Departure	62	28
	Total	76	67
Total Approaches			
	Approach	2,021	2,904
	Departure	2,021	2,904
	Total	4,042	5,808

Table D-1 - Existing Peak Hour PCE Volume Summary

		AM Peak Hour	PM Peak Hour
		Existing No Build Volumes	Existing No Build Volumes
6	**Milliken Avenue/7th Street**		
NBL		98	70
NBT		779	1,713
NBR		40	8
SBL		16	14
SBT		1,106	985
SBR		7	7
EBL		42	127
EBT		0	2
EBR		23	79
WBL		11	26
WBT		0	3
WBR		9	30
North Leg			
	Approach	1,129	1,006
	Departure	830	1,870
	Total	1,959	2,876
South Leg			
	Approach	917	1,791
	Departure	1,140	1,090
	Total	2,057	2,881
East Leg			
	Approach	20	59
	Departure	56	24
	Total	76	83
West Leg			
	Approach	65	208
	Departure	105	80
	Total	170	288
Total Approaches			
	Approach	2,131	3,064
	Departure	2,131	3,064
	Total	4,262	6,128

APPENDIX D2

Table D-2 - Opening Year (2031) Peak Hour PCE Volume Summary

	AM Peak Hour							PM Peak Hour						
	Existing (2022) PCE	Design Year (2051) Vol	Growth From Exist to DY (2051)	Growth from Exist to OY (2031)	Opening Year No Build Volumes	Tunnel Ridership Trips	Opening Year Build Volumes	Existing (2022) PCE	Design Year (2051) Vol	Growth From Exist to DY (2051)	Growth from Exist to OY (2031)	Opening Year No Build Volumes	Tunnel Ridership Trips	Opening Year Build Volumes
1 East Terminal Way/Airport Drive [West]														
NBL	29	573	544	169	198	0	198	36	280	244	76	112	0	112
NBT	0	0	0	0	0	0	0	0	0	0	0	0	0	0
NBR	11	69	58	18	29	0	29	37	101	64	20	57	0	57
SBL	0	0	0	0	0	0	0	0	0	0	0	0	0	0
SBT	0	0	0	0	0	0	0	0	0	0	0	0	0	0
SBR	0	0	0	0	0	0	0	0	0	0	0	0	0	0
EBL	0	0	0	0	0	0	0	0	0	0	0	0	0	0
EBT	772	1,099	327	101	873	0	873	1,478	1,647	169	52	1,530	0	1,530
EBR	70	308	238	74	144	0	144	107	226	119	37	144	0	144
WBL	66	75	9	3	69	-3	66	61	63	2	1	62	-2	60
WBT	715	815	100	31	746	0	746	772	946	174	54	826	0	826
WBR	0	0	0	0	0	0	0	0	0	0	0	0	0	0
North Leg														
Approach	0	0	0	0	0	0	0	0	0	0	0	0	0	0
Departure	0	0	0	0	0	0	0	0	0	0	0	0	0	0
Total	0	0	0	0	0	0	0	0	0	0	0	0	0	0
South Leg														
Approach	40	642	602	187	227	0	227	73	381	308	96	169	0	169
Departure	136	383	247	77	213	-3	210	168	289	121	38	206	-2	204
Total	176	1,025	849	264	440	-3	437	241	670	429	134	375	-2	373
East Leg														
Approach	781	890	109	34	815	-3	812	833	1,009	176	55	888	-2	886
Departure	783	1,168	385	119	902	0	902	1,515	1,748	233	72	1,587	0	1,587
Total	1,564	2,058	494	153	1,717	-3	1,714	2,348	2,757	409	127	2,475	-2	2,473
West Leg														
Approach	842	1,407	565	175	1,017	0	1,017	1,585	1,873	288	89	1,674	0	1,674
Departure	744	1,388	644	200	944	0	944	808	1,226	418	130	938	0	938
Total	1,586	2,795	1,209	375	1,961	0	1,961	2,393	3,099	706	219	2,612	0	2,612
Total Approaches														
Approach	1,663	2,939	1,276	396	2,059	-3	2,056	2,491	3,263	772	240	2,731	-2	2,729
Departure	1,663	2,939	1,276	396	2,059	-3	2,056	2,491	3,263	772	240	2,731	-2	2,729
Total	3,326	5,878	2,552	792	4,118	-6	4,112	4,982	6,526	1,544	480	5,462	-4	5,458

Table D-2 - Opening Year (2031) Peak Hour PCE Volume Summary

	AM Peak Hour							PM Peak Hour						
	Existing (2022) PCE	Design Year (2051) Vol	Growth From Exist to DY (2051)	Growth from Exist to OY (2031)	Opening Year No Build Volumes	Tunnel Ridership Trips	Opening Year Build Volumes	Existing (2022) PCE	Design Year (2051) Vol	Growth From Exist to DY (2051)	Growth from Exist to OY (2031)	Opening Year No Build Volumes	Tunnel Ridership Trips	Opening Year Build Volumes
2 Archibald Avenue - Terminal Way/Airport Drive														
NBL	18	67	49	15	33	0	33	12	13	1	0	12	0	12
NBT	30	322	292	91	121	0	121	74	98	24	7	81	0	81
NBR	12	62	50	16	28	0	28	49	57	8	2	51	0	51
SBL	258	396	138	43	301	0	301	405	637	232	72	477	0	477
SBT	108	497	389	121	229	-3	226	98	296	198	61	159	-1	158
SBR	409	451	42	13	422	-3	419	366	480	114	35	401	-2	399
EBL	426	762	336	104	530	0	530	739	903	164	51	790	0	790
EBT	337	354	17	5	342	0	342	759	810	51	16	775	0	775
EBR	20	52	32	10	30	0	30	17	35	18	6	23	0	23
WBL	54	70	16	5	59	0	59	56	146	90	28	84	0	84
WBT	354	372	18	6	360	0	360	455	516	61	19	474	0	474
WBR	358	376	18	6	364	-4	360	500	779	279	87	587	-4	583
North Leg														
Approach	775	1,344	569	177	952	-6	946	869	1,413	544	168	1,037	-3	1,034
Departure	814	1,460	646	201	1,015	-4	1,011	1,313	1,780	467	145	1,458	-4	1,454
Total	1,589	2,804	1,215	378	1,967	-10	1,957	2,182	3,193	1,011	313	2,495	-7	2,488
South Leg														
Approach	60	451	391	122	182	0	182	135	168	33	9	144	0	144
Departure	182	619	437	136	318	-3	315	171	477	306	95	266	-1	265
Total	242	1,070	828	258	500	-3	497	306	645	339	104	410	-1	409
East Leg														
Approach	766	818	52	17	783	-4	779	1,011	1,441	430	134	1,145	-4	1,141
Departure	607	812	205	64	671	0	671	1,213	1,504	291	90	1,303	0	1,303
Total	1,373	1,630	257	81	1,454	-4	1,450	2,224	2,945	721	224	2,448	-4	2,444
West Leg														
Approach	783	1,168	385	119	902	0	902	1,515	1,748	233	73	1,588	0	1,588
Departure	781	890	109	34	815	-3	812	833	1,009	176	54	887	-2	885
Total	1,564	2,058	494	153	1,717	-3	1,714	2,348	2,757	409	127	2,475	-2	2,473
Total Approaches														
Approach	2,384	3,781	1,397	435	2,819	-10	2,809	3,530	4,770	1,240	384	3,914	-7	3,907
Departure	2,384	3,781	1,397	435	2,819	-10	2,809	3,530	4,770	1,240	384	3,914	-7	3,907
Total	4,768	7,562	2,794	870	5,638	-20	5,618	7,060	9,540	2,480	768	7,828	-14	7,814

Table D-2 - Opening Year (2031) Peak Hour PCE Volume Summary

	AM Peak Hour							PM Peak Hour						
	Existing (2022) PCE	Design Year (2051) Vol	Growth From Exist to DY (2051)	Growth from Exist to OY (2031)	Opening Year No Build Volumes	Tunnel Ridership Trips	Opening Year Build Volumes	Existing (2022) PCE	Design Year (2051) Vol	Growth From Exist to DY (2051)	Growth from Exist to OY (2031)	Opening Year No Build Volumes	Tunnel Ridership Trips	Opening Year Build Volumes
3 East Terminal Way/Airport Drive [East]														
NBL	74	78	4	1	75	-4	71	125	131	6	2	127	-4	123
NBT	0	0	0	0	0	0	0	0	0	0	0	0	0	0
NBR	98	476	378	117	215	-1	214	219	228	9	3	222	-3	219
SBL	0	0	0	0	0	0	0	0	0	0	0	0	0	0
SBT	0	0	0	0	0	0	0	0	0	0	0	0	0	0
SBR	0	0	0	0	0	0	0	0	0	0	0	0	0	0
EBL	0	0	0	0	0	0	0	0	0	0	0	0	0	0
EBT	598	777	179	56	654	0	654	1,206	1,491	285	88	1,294	0	1,294
EBR	9	35	26	8	17	0	17	7	12	5	2	9	0	9
WBL	74	634	560	174	248	-4	244	65	293	228	71	136	-2	134
WBT	692	740	48	15	707	0	707	886	1,310	424	132	1,018	0	1,018
WBR	0	0	0	0	0	0	0	0	0	0	0	0	0	0
North Leg														
Approach	0	0	0	0	0	0	0	0	0	0	0	0	0	0
Departure	0	0	0	0	0	0	0	0	0	0	0	0	0	0
Total	0	0	0	0	0	0	0	0	0	0	0	0	0	0
South Leg														
Approach	172	554	382	118	290	-5	285	344	359	15	5	349	-7	342
Departure	83	669	586	182	265	-4	261	72	305	233	73	145	-2	143
Total	255	1,223	968	300	555	-9	546	416	664	248	78	494	-9	485
East Leg														
Approach	766	1,374	608	189	955	-4	951	951	1,603	652	203	1,154	-2	1,152
Departure	696	1,253	557	173	869	-1	868	1,425	1,719	294	91	1,516	-3	1,513
Total	1,462	2,627	1,165	362	1,824	-5	1,819	2,376	3,322	946	294	2,670	-5	2,665
West Leg														
Approach	607	812	205	64	671	0	671	1,213	1,503	290	90	1,303	0	1,303
Departure	766	818	52	16	782	-4	778	1,011	1,441	430	134	1,145	-4	1,141
Total	1,373	1,630	257	80	1,453	-4	1,449	2,224	2,944	720	224	2,448	-4	2,444
Total Approaches														
Approach	1,545	2,740	1,195	371	1,916	-9	1,907	2,508	3,465	957	298	2,806	-9	2,797
Departure	1,545	2,740	1,195	371	1,916	-9	1,907	2,508	3,465	957	298	2,806	-9	2,797
Total	3,090	5,480	2,390	742	3,832	-18	3,814	5,016	6,930	1,914	596	5,612	-18	5,594

Table D-2 - Opening Year (2031) Peak Hour PCE Volume Summary

	AM Peak Hour							PM Peak Hour						
	Existing (2022) PCE	Design Year (2051) Vol	Growth From Exist to DY (2051)	Growth from Exist to OY (2031)	Opening Year No Build Volumes	Tunnel Ridership Trips	Opening Year Build Volumes	Existing (2022) PCE	Design Year (2051) Vol	Growth From Exist to DY (2051)	Growth from Exist to OY (2031)	Opening Year No Build Volumes	Tunnel Ridership Trips	Opening Year Build Volumes
4 Rental Car Road/Airport Drive														
NBL	67	168	101	31	98	0	98	62	78	16	5	67	0	67
NBT	0	0	0	0	0	0	0	0	0	0	0	0	0	0
NBR	56	359	303	94	150	-1	149	70	95	25	8	78	-1	77
SBL	0	0	0	0	0	0	0	0	0	0	0	0	0	0
SBT	0	0	0	0	0	0	0	0	0	0	0	0	0	0
SBR	0	0	0	0	0	0	0	0	0	0	0	0	0	0
EBL	0	0	0	0	0	0	0	0	0	0	0	0	0	0
EBT	652	1,208	556	173	825	-1	824	1,397	1,690	293	91	1,488	-3	1,485
EBR	44	45	1	0	44	0	44	28	29	1	0	28	0	28
WBL	70	90	20	6	76	-1	75	57	64	7	2	59	-1	58
WBT	699	1,206	507	157	856	-4	852	889	1,525	636	197	1,086	-2	1,084
WBR	0	0	0	0	0	0	0	0	0	0	0	0	0	0
North Leg														
Approach	0	0	0	0	0	0	0	0	0	0	0	0	0	0
Departure	0	0	0	0	0	0	0	0	0	0	0	0	0	0
Total	0	0	0	0	0	0	0	0	0	0	0	0	0	0
South Leg														
Approach	123	527	404	125	248	-1	247	132	173	41	13	145	-1	144
Departure	114	135	21	6	120	-1	119	85	93	8	2	87	-1	86
Total	237	662	425	131	368	-2	366	217	266	49	15	232	-2	230
East Leg														
Approach	769	1,296	527	163	932	-5	927	946	1,589	643	199	1,145	-3	1,142
Departure	708	1,567	859	267	975	-2	973	1,467	1,785	318	99	1,566	-4	1,562
Total	1,477	2,863	1,386	430	1,907	-7	1,900	2,413	3,374	961	298	2,711	-7	2,704
West Leg														
Approach	696	1,253	557	173	869	-1	868	1,425	1,719	294	91	1,516	-3	1,513
Departure	766	1,374	608	188	954	-4	950	951	1,603	652	202	1,153	-2	1,151
Total	1,462	2,627	1,165	361	1,823	-5	1,818	2,376	3,322	946	293	2,669	-5	2,664
Total Approaches														
Approach	1,588	3,076	1,488	461	2,049	-7	2,042	2,503	3,481	978	303	2,806	-7	2,799
Departure	1,588	3,076	1,488	461	2,049	-7	2,042	2,503	3,481	978	303	2,806	-7	2,799
Total	3,176	6,152	2,976	922	4,098	-14	4,084	5,006	6,962	1,956	606	5,612	-14	5,598

Table D-2 - Opening Year (2031) Peak Hour PCE Volume Summary

	AM Peak Hour							PM Peak Hour						
	Existing (2022) PCE	Design Year (2051) Vol	Growth From Exist to DY (2051)	Growth from Exist to OY (2031)	Opening Year No Build Volumes	Tunnel Ridership Trips	Opening Year Build Volumes	Existing (2022) PCE	Design Year (2051) Vol	Growth From Exist to DY (2051)	Growth from Exist to OY (2031)	Opening Year No Build Volumes	Tunnel Ridership Trips	Opening Year Build Volumes
5 Milliken Avenue/Azusa Court														
NBL	0	0	0	0	0	0	0	0	0	0	0	0	0	0
NBT	830	951	121	38	868	0	868	1,870	2,063	193	60	1,930	0	1,930
NBR	0	0	0	0	0	0	0	0	0	0	0	0	0	0
SBL	0	0	0	0	0	0	0	0	0	0	0	0	0	0
SBT	1,115	1,226	111	34	1,149	0	1,149	967	1,045	78	24	991	0	991
SBR	62	65	3	1	63	0	63	28	29	1	0	28	0	28
EBL	0	0	0	0	0	0	0	0	0	0	0	0	0	0
EBT	0	0	0	0	0	0	0	0	0	0	0	0	0	0
EBR	14	15	1	0	14	1	15	39	42	3	1	40	1	41
WBL	0	0	0	0	0	0	0	0	0	0	0	0	0	0
WBT	0	0	0	0	0	0	0	0	0	0	0	0	0	0
WBR	0	0	0	0	0	0	0	0	0	0	0	0	0	0
North Leg														
Approach	1,177	1,291	114	35	1,212	0	1,212	995	1,074	79	24	1,019	0	1,019
Departure	830	951	121	38	868	0	868	1,870	2,063	193	60	1,930	0	1,930
Total	2,007	2,242	235	73	2,080	0	2,080	2,865	3,137	272	84	2,949	0	2,949
South Leg														
Approach	830	951	121	38	868	0	868	1,870	2,063	193	60	1,930	0	1,930
Departure	1,129	1,241	112	34	1,163	1	1,164	1,006	1,087	81	25	1,031	1	1,032
Total	1,959	2,192	233	72	2,031	1	2,032	2,876	3,150	274	85	2,961	1	2,962
East Leg														
Approach	0	0	0	0	0	0	0	0	0	0	0	0	0	0
Departure	0	0	0	0	0	0	0	0	0	0	0	0	0	0
Total	0	0	0	0	0	0	0	0	0	0	0	0	0	0
West Leg														
Approach	14	15	1	0	14	1	15	39	42	3	1	40	1	41
Departure	62	65	3	1	63	0	63	28	29	1	0	28	0	28
Total	76	80	4	1	77	1	78	67	71	4	1	68	1	69
Total Approaches														
Approach	2,021	2,257	236	73	2,094	1	2,095	2,904	3,179	275	85	2,989	1	2,990
Departure	2,021	2,257	236	73	2,094	1	2,095	2,904	3,179	275	85	2,989	1	2,990
Total	4,042	4,514	472	146	4,188	2	4,190	5,808	6,358	550	170	5,978	2	5,980

Table D-2 - Opening Year (2031) Peak Hour PCE Volume Summary

	AM Peak Hour							PM Peak Hour						
	Existing (2022) PCE	Design Year (2051) Vol	Growth From Exist to DY (2051)	Growth from Exist to OY (2031)	Opening Year No Build Volumes	Tunnel Ridership Trips	Opening Year Build Volumes	Existing (2022) PCE	Design Year (2051) Vol	Growth From Exist to DY (2051)	Growth from Exist to OY (2031)	Opening Year No Build Volumes	Tunnel Ridership Trips	Opening Year Build Volumes
6 Milliken Avenue/7th Street														
NBL	98	106	8	2	100	1	101	70	176	106	33	103	1	104
NBT	779	788	9	3	782	0	782	1,713	1,839	126	39	1,752	0	1,752
NBR	40	42	2	1	41	0	41	8	8	0	0	8	0	8
SBL	16	20	4	1	17	0	17	14	19	5	2	16	0	16
SBT	1,106	1,208	102	32	1,138	1	1,139	985	1,034	49	15	1,000	1	1,001
SBR	7	12	5	2	9	0	9	7	34	27	8	15	0	15
EBL	42	151	109	34	76	0	76	127	189	62	19	146	0	146
EBT	0	0	0	0	0	0	0	2	2	0	0	2	0	2
EBR	23	54	31	10	33	0	33	79	83	4	1	80	0	80
WBL	11	12	1	0	11	0	11	26	27	1	0	26	0	26
WBT	0	0	0	0	0	0	0	3	8	5	2	5	0	5
WBR	9	12	3	1	10	0	10	30	35	5	2	32	0	32
North Leg														
Approach	1,129	1,240	111	35	1,164	1	1,165	1,006	1,087	81	25	1,031	1	1,032
Departure	830	951	121	38	868	0	868	1,870	2,063	193	60	1,930	0	1,930
Total	1,959	2,191	232	73	2,032	1	2,033	2,876	3,150	274	85	2,961	1	2,962
South Leg														
Approach	917	936	19	6	923	1	924	1,791	2,023	232	72	1,863	1	1,864
Departure	1,140	1,274	134	42	1,182	1	1,183	1,090	1,144	54	16	1,106	1	1,107
Total	2,057	2,210	153	48	2,105	2	2,107	2,881	3,167	286	88	2,969	2	2,971
East Leg														
Approach	20	24	4	1	21	0	21	59	70	11	4	63	0	63
Departure	56	62	6	2	58	0	58	24	29	5	2	26	0	26
Total	76	86	10	3	79	0	79	83	99	16	6	89	0	89
West Leg														
Approach	65	205	140	44	109	0	109	208	274	66	20	228	0	228
Departure	105	118	13	4	109	1	110	80	218	138	43	123	1	124
Total	170	323	153	48	218	1	219	288	492	204	63	351	1	352
Total Approaches														
Approach	2,131	2,405	274	86	2,217	2	2,219	3,064	3,454	390	121	3,185	2	3,187
Departure	2,131	2,405	274	86	2,217	2	2,219	3,064	3,454	390	121	3,185	2	3,187
Total	4,262	4,810	548	172	4,434	4	4,438	6,128	6,908	780	242	6,370	4	6,374

APPENDIX D3

Table D-3 - Design Year (2051) Peak Hour Volume Summary

	AM Peak Hour			PM Peak Hour		
	Design Year No Build Volumes	Tunnel Ridership Trips	Design Year Build Volumes	Design Year No Build Volumes	Tunnel Ridership Trips	Design Year Build Volumes
1 East Terminal Way/Airport Drive [West]						
NBL	573	0	573	280	0	280
NBT	0	0	0	0	0	0
NBR	69	0	69	101	0	101
SBL	0	0	0	0	0	0
SBT	0	0	0	0	0	0
SBR	0	0	0	0	0	0
EBL	0	0	0	0	0	0
EBT	1,099	0	1,099	1,647	0	1,647
EBR	308	0	308	226	0	226
WBL	75	-13	62	63	-6	57
WBT	815	0	815	946	0	946
WBR	0	0	0	0	0	0
North Leg						
Approach	0	0	0	0	0	0
Departure	0	0	0	0	0	0
Total	0	0	0	0	0	0
South Leg						
Approach	642	0	642	381	0	381
Departure	383	-13	370	289	-6	283
Total	1,025	-13	1,012	670	-6	664
East Leg						
Approach	890	-13	877	1,009	-6	1,003
Departure	1,168	0	1,168	1,748	0	1,748
Total	2,058	-13	2,045	2,757	-6	2,751
West Leg						
Approach	1,407	0	1,407	1,873	0	1,873
Departure	1,388	0	1,388	1,226	0	1,226
Total	2,795	0	2,795	3,099	0	3,099
Total Approaches						
Approach	2,939	-13	2,926	3,263	-6	3,257
Departure	2,939	-13	2,926	3,263	-6	3,257
Total	5,878	-26	5,852	6,526	-12	6,514

Table D-3 - Design Year (2051) Peak Hour Volume Summary

	AM Peak Hour			PM Peak Hour		
	Design Year No Build Volumes	Tunnel Ridership Trips	Design Year Build Volumes	Design Year No Build Volumes	Tunnel Ridership Trips	Design Year Build Volumes
2 Archibald Avenue - Terminal Way/Airport Drive						
NBL	67	0	67	13	0	13
NBT	322	0	322	98	0	98
NBR	62	0	62	57	0	57
SBL	396	0	396	637	0	637
SBT	497	-2	495	296	-1	295
SBR	451	-13	438	480	-6	474
EBL	762	0	762	903	0	903
EBT	354	0	354	810	0	810
EBR	52	0	52	35	0	35
WBL	70	0	70	146	0	146
WBT	372	0	372	516	0	516
WBR	376	-12	364	779	-7	772
North Leg						
Approach	1,344	-15	1,329	1,413	-7	1,406
Departure	1,460	-12	1,448	1,780	-7	1,773
Total	2,804	-27	2,777	3,193	-14	3,179
South Leg						
Approach	451	0	451	168	0	168
Departure	619	-2	617	477	-1	476
Total	1,070	-2	1,068	645	-1	644
East Leg						
Approach	818	-12	806	1,441	-7	1,434
Departure	812	0	812	1,504	0	1,504
Total	1,630	-12	1,618	2,945	-7	2,938
West Leg						
Approach	1,168	0	1,168	1,748	0	1,748
Departure	890	-13	877	1,009	-6	1,003
Total	2,058	-13	2,045	2,757	-6	2,751
Total Approaches						
Approach	3,781	-27	3,754	4,770	-14	4,756
Departure	3,781	-27	3,754	4,770	-14	4,756
Total	7,562	-54	7,508	9,540	-28	9,512

Table D-3 - Design Year (2051) Peak Hour Volume Summary

	AM Peak Hour			PM Peak Hour		
	Design Year No Build Volumes	Tunnel Ridership Trips	Design Year Build Volumes	Design Year No Build Volumes	Tunnel Ridership Trips	Design Year Build Volumes
3 East Terminal Way/Airport Drive [East]						
NBL	78	-12	66	131	-7	124
NBT	0	0	0	0	0	0
NBR	476	-1	475	228	-3	225
SBL	0	0	0	0	0	0
SBT	0	0	0	0	0	0
SBR	0	0	0	0	0	0
EBL	0	0	0	0	0	0
EBT	777	0	777	1,491	0	1,491
EBR	35	0	35	12	0	12
WBL	634	-3	631	293	-2	291
WBT	740	0	740	1,310	0	1,310
WBR	0	0	0	0	0	0
North Leg						
Approach	0	0	0	0	0	0
Departure	0	0	0	0	0	0
Total	0	0	0	0	0	0
South Leg						
Approach	554	-13	541	359	-10	349
Departure	669	-3	666	305	-2	303
Total	1,223	-16	1,207	664	-12	652
East Leg						
Approach	1,374	-3	1,371	1,603	-2	1,601
Departure	1,253	-1	1,252	1,719	-3	1,716
Total	2,627	-4	2,623	3,322	-5	3,317
West Leg						
Approach	812	0	812	1,503	0	1,503
Departure	818	-12	806	1,441	-7	1,434
Total	1,630	-12	1,618	2,944	-7	2,937
Total Approaches						
Approach	2,740	-16	2,724	3,465	-12	3,453
Departure	2,740	-16	2,724	3,465	-12	3,453
Total	5,480	-32	5,448	6,930	-24	6,906

Table D-3 - Design Year (2051) Peak Hour Volume Summary

	AM Peak Hour			PM Peak Hour		
	Design Year No Build Volumes	Tunnel Ridership Trips	Design Year Build Volumes	Design Year No Build Volumes	Tunnel Ridership Trips	Design Year Build Volumes
4 Rental Car Road/Airport Drive						
NBL	168	0	168	78	0	78
NBT	0	0	0	0	0	0
NBR	359	-1	358	95	-1	94
SBL	0	0	0	0	0	0
SBT	0	0	0	0	0	0
SBR	0	0	0	0	0	0
EBL	0	0	0	0	0	0
EBT	1,208	-1	1,207	1,690	-3	1,687
EBR	45	0	45	29	0	29
WBL	90	-2	88	64	-2	62
WBT	1,206	-3	1,203	1,525	-2	1,523
WBR	0	0	0	0	0	0
North Leg						
Approach	0	0	0	0	0	0
Departure	0	0	0	0	0	0
Total	0	0	0	0	0	0
South Leg						
Approach	527	-1	526	173	-1	172
Departure	135	-2	133	93	-2	91
Total	662	-3	659	266	-3	263
East Leg						
Approach	1,296	-5	1,291	1,589	-4	1,585
Departure	1,567	-2	1,565	1,785	-4	1,781
Total	2,863	-7	2,856	3,374	-8	3,366
West Leg						
Approach	1,253	-1	1,252	1,719	-3	1,716
Departure	1,374	-3	1,371	1,603	-2	1,601
Total	2,627	-4	2,623	3,322	-5	3,317
Total Approaches						
Approach	3,076	-7	3,069	3,481	-8	3,473
Departure	3,076	-7	3,069	3,481	-8	3,473
Total	6,152	-14	6,138	6,962	-16	6,946

Table D-3 - Design Year (2051) Peak Hour Volume Summary

	AM Peak Hour			PM Peak Hour		
	Design Year No Build Volumes	Tunnel Ridership Trips	Design Year Build Volumes	Design Year No Build Volumes	Tunnel Ridership Trips	Design Year Build Volumes
5 Milliken Avenue/Azusa Court						
NBL	0	0	0	0	0	0
NBT	951	0	951	2,063	0	2,063
NBR	0	0	0	0	0	0
SBL	0	0	0	0	0	0
SBT	1,226	0	1,226	1,045	0	1,045
SBR	65	0	65	29	0	29
EBL	0	0	0	0	0	0
EBT	0	0	0	0	0	0
EBR	15	1	16	42	1	43
WBL	0	0	0	0	0	0
WBT	0	0	0	0	0	0
WBR	0	0	0	0	0	0
North Leg						
Approach	1,291	0	1,291	1,074	0	1,074
Departure	951	0	951	2,063	0	2,063
Total	2,242	0	2,242	3,137	0	3,137
South Leg						
Approach	951	0	951	2,063	0	2,063
Departure	1,241	1	1,242	1,087	1	1,088
Total	2,192	1	2,193	3,150	1	3,151
East Leg						
Approach	0	0	0	0	0	0
Departure	0	0	0	0	0	0
Total	0	0	0	0	0	0
West Leg						
Approach	15	1	16	42	1	43
Departure	65	0	65	29	0	29
Total	80	1	81	71	1	72
Total Approaches						
Approach	2,257	1	2,258	3,179	1	3,180
Departure	2,257	1	2,258	3,179	1	3,180
Total	4,514	2	4,516	6,358	2	6,360

Table D-3 - Design Year (2051) Peak Hour Volume Summary

	AM Peak Hour			PM Peak Hour		
	Design Year No Build Volumes	Tunnel Ridership Trips	Design Year Build Volumes	Design Year No Build Volumes	Tunnel Ridership Trips	Design Year Build Volumes
6 Milliken Avenue/7th Street						
NBL	106	1	107	176	1	177
NBT	788	0	788	1,839	0	1,839
NBR	42	0	42	8	0	8
SBL	20	0	20	19	0	19
SBT	1,208	1	1,209	1,034	1	1,035
SBR	12	0	12	34	0	34
EBL	151	0	151	189	0	189
EBT	0	0	0	2	0	2
EBR	54	0	54	83	0	83
WBL	12	0	12	27	0	27
WBT	0	0	0	8	0	8
WBR	12	0	12	35	0	35
North Leg						
Approach	1,240	1	1,241	1,087	1	1,088
Departure	951	0	951	2,063	0	2,063
Total	2,191	1	2,192	3,150	1	3,151
South Leg						
Approach	936	1	937	2,023	1	2,024
Departure	1,274	1	1,275	1,144	1	1,145
Total	2,210	2	2,212	3,167	2	3,169
East Leg						
Approach	24	0	24	70	0	70
Departure	62	0	62	29	0	29
Total	86	0	86	99	0	99
West Leg						
Approach	205	0	205	274	0	274
Departure	118	1	119	218	1	219
Total	323	1	324	492	1	493
Total Approaches						
Approach	2,405	2	2,407	3,454	2	3,456
Departure	2,405	2	2,407	3,454	2	3,456
Total	4,810	4	4,814	6,908	4	6,912

APPENDIX D4

Table D-4 - Scenario 1 Construction Year 2025 Peak Hour PCE Volume Summary

	AM Peak Hour								PM Peak Hour							
	Existing (2022) No Project	Build-Out (2051) Volumes	Growth From Exist to Build-Out	Growth From Exist to (2025)	2025 Traffic Volumes	Construction Trips T2	Construction Trips T4	2025 w/ Construction Scenario 1	Existing (2022) No Project	Build-Out (2051) Volumes	Growth From Exist to Build-Out	Growth From Exist to (2025)	2025 Traffic Volumes	Construction Trips T2	Construction Trips T4	2025 w/ Construction Scenario 1
1 East Terminal Way/Airport Drive [West]																
NBL	29	573	544	56	85	0	0	85	36	280	244	25	61	0	0	61
NBT	0	0	0	0	0	0	0	0	0	0	0	0	0	0	0	0
NBR	11	69	58	6	17	33	0	50	36	101	65	7	43	193	0	236
SBL	0	0	0	0	0	0	0	0	0	0	0	0	0	0	0	0
SBT	0	0	0	0	0	0	0	0	0	0	0	0	0	0	0	0
SBR	0	0	0	0	0	0	0	0	0	0	0	0	0	0	0	0
EBL	0	0	0	0	0	0	0	0	0	0	0	0	0	0	0	0
EBT	763	1,099	336	35	798	0	0	798	1,464	1,647	183	19	1,483	0	0	1,483
EBR	70	308	238	25	95	0	0	95	107	226	119	12	119	0	0	119
WBL	64	75	11	1	65	0	0	65	61	63	2	0	61	0	0	61
WBT	688	815	127	13	701	0	0	701	774	946	172	18	792	0	0	792
WBR	0	0	0	0	0	0	0	0	0	0	0	0	0	0	0	0
North Leg																
Approach	0	0	0	0	0	0	0	0	0	0	0	0	0	0	0	0
Departure	0	0	0	0	0	0	0	0	0	0	0	0	0	0	0	0
Total	0	0	0	0	0	0	0	0	0	0	0	0	0	0	0	0
South Leg																
Approach	40	642	602	62	102	33	0	135	72	381	309	32	104	193	0	297
Departure	134	383	249	26	160	0	0	160	168	289	121	12	180	0	0	180
Total	174	1,025	851	88	262	33	0	295	240	670	430	44	284	193	0	477
East Leg																
Approach	752	890	138	14	766	0	0	766	835	1,009	174	18	853	0	0	853
Departure	774	1,168	394	41	815	33	0	848	1,500	1,748	248	26	1,526	193	0	1,719
Total	1,526	2,058	532	55	1,581	33	0	1,614	2,335	2,757	422	44	2,379	193	0	2,572
West Leg																
Approach	833	1,407	574	60	893	0	0	893	1,571	1,873	302	31	1,602	0	0	1,602
Departure	717	1,388	671	69	786	0	0	786	810	1,226	416	43	853	0	0	853
Total	1,550	2,795	1,245	129	1,679	0	0	1,679	2,381	3,099	718	74	2,455	0	0	2,455
Total Approaches																
Approach	1,625	2,939	1,314	136	1,761	33	0	1,794	2,478	3,263	785	81	2,559	193	0	2,752
Departure	1,625	2,939	1,314	136	1,761	33	0	1,794	2,478	3,263	785	81	2,559	193	0	2,752
Total	3,250	5,878	2,628	272	3,522	66	0	3,588	4,956	6,526	1,570	162	5,118	386	0	5,504

Table D-4 - Scenario 1 Construction Year 2025 Peak Hour PCE Volume Summary

	AM Peak Hour								PM Peak Hour							
	Existing (2022) No Project	Build-Out (2051) Volumes	Growth From Exist to Build-Out	Growth From Exist to (2025)	2025 Traffic Volumes	Construction Trips T2	Construction Trips T4	2025 w/ Construction Scenario 1	Existing (2022) No Project	Build-Out (2051) Volumes	Growth From Exist to Build-Out	Growth From Exist to (2025)	2025 Traffic Volumes	Construction Trips T2	Construction Trips T4	2025 w/ Construction Scenario 1
2 Archibald Avenue/I-10 Ramps																
NBL	88	204	116	12	100	17	17	134	288	473	185	19	307	97	97	501
NBT	549	1,062	513	53	602	0	0	602	859	1,745	886	92	951	0	0	951
NBR	366	612	246	25	391	17	17	425	477	629	152	16	493	97	97	687
SBL	483	507	24	2	485	0	0	485	332	349	17	2	334	0	0	334
SBT	657	1,127	470	49	706	0	0	706	634	1,082	448	46	680	0	0	680
SBR	443	465	22	2	445	0	0	445	551	579	28	3	554	0	0	554
EBL	669	856	187	19	688	0	0	688	551	661	110	11	562	0	0	562
EBT	0	0	0	0	0	0	0	0	0	0	0	0	0	0	0	0
EBR	320	877	557	58	378	47	47	472	186	428	242	25	211	17	17	245
WBL	167	421	254	26	193	47	47	287	114	214	100	10	124	17	17	158
WBT	0	0	0	0	0	0	0	0	0	0	0	0	0	0	0	0
WBR	375	441	66	7	382	0	0	382	413	434	21	2	415	0	0	415
North Leg																
Approach	1,583	2,099	516	53	1,636	0	0	1,636	1,517	2,010	493	51	1,568	0	0	1,568
Departure	1,593	2,359	766	79	1,672	0	0	1,672	1,823	2,840	1,017	105	1,928	0	0	1,928
Total	3,176	4,458	1,282	132	3,308	0	0	3,308	3,340	4,850	1,510	156	3,496	0	0	3,496
South Leg																
Approach	1,003	1,878	875	90	1,093	34	34	1,161	1,624	2,847	1,223	127	1,751	194	194	2,139
Departure	1,144	2,425	1,281	133	1,277	94	94	1,465	934	1,724	790	81	1,015	34	34	1,083
Total	2,147	4,303	2,156	223	2,370	128	128	2,626	2,558	4,571	2,013	208	2,766	228	228	3,222
East Leg																
Approach	542	862	320	33	575	47	47	669	527	648	121	12	539	17	17	573
Departure	849	1,119	270	27	876	17	17	910	809	978	169	18	827	97	97	1,021
Total	1,391	1,981	590	60	1,451	64	64	1,579	1,336	1,626	290	30	1,366	114	114	1,594
West Leg																
Approach	989	1,733	744	77	1,066	47	47	1,160	737	1,089	352	36	773	17	17	807
Departure	531	669	138	14	545	17	17	579	839	1,052	213	22	861	97	97	1,055
Total	1,520	2,402	882	91	1,611	64	64	1,739	1,576	2,141	565	58	1,634	114	114	1,862
Total Approaches																
Approach	4,117	6,572	2,455	253	4,370	128	128	4,626	4,405	6,594	2,189	226	4,631	228	228	5,087
Departure	4,117	6,572	2,455	253	4,370	128	128	4,626	4,405	6,594	2,189	226	4,631	228	228	5,087
Total	8,234	13,144	4,910	506	8,740	256	256	9,252	8,810	13,188	4,378	452	9,262	456	456	10,174

Table D-4 - Scenario 1 Construction Year 2025 Peak Hour PCE Volume Summary

	AM Peak Hour								PM Peak Hour							
	Existing (2022) No Project	Build-Out (2051) Volumes	Growth From Exist to Build-Out	Growth From Exist to (2025)	2025 Traffic Volumes	Construction Trips T2	Construction Trips T4	2025 w/ Construction Scenario 1	Existing (2022) No Project	Build-Out (2051) Volumes	Growth From Exist to Build-Out	Growth From Exist to (2025)	2025 Traffic Volumes	Construction Trips T2	Construction Trips T4	2025 w/ Construction Scenario 1
3 Archibald Avenue/Guasti Road																
NBL	48	131	83	9	57	0	0	57	23	61	38	4	27	0	0	27
NBT	671	1,198	527	55	726	33	33	792	1,194	1,625	431	45	1,239	193	193	1,625
NBR	74	130	56	6	80	0	0	80	70	94	24	2	72	0	0	72
SBL	303	675	372	38	341	0	0	341	85	181	96	10	95	0	0	95
SBT	706	1,284	578	60	766	93	93	952	763	1,186	423	44	807	33	33	873
SBR	135	466	331	34	169	0	0	169	85	357	272	28	113	0	0	113
EBL	277	554	277	29	306	0	0	306	227	680	453	47	274	0	0	274
EBT	113	223	110	11	124	0	0	124	136	402	266	28	164	0	0	164
EBR	18	29	11	1	19	0	0	19	58	125	67	7	65	0	0	65
WBL	17	32	15	2	19	0	0	19	53	102	49	5	58	0	0	58
WBT	43	150	107	11	54	0	0	54	48	250	202	21	69	0	0	69
WBR	55	126	71	7	62	0	0	62	203	543	340	35	238	0	0	238
North Leg																
Approach	1,144	2,425	1,281	132	1,276	93	93	1,462	933	1,724	791	82	1,015	33	33	1,081
Departure	1,003	1,878	875	91	1,094	33	33	1,160	1,624	2,848	1,224	127	1,751	193	193	2,137
Total	2,147	4,303	2,156	223	2,370	126	126	2,622	2,557	4,572	2,015	209	2,766	226	226	3,218
South Leg																
Approach	793	1,459	666	70	863	33	33	929	1,287	1,780	493	51	1,338	193	193	1,724
Departure	741	1,345	604	63	804	93	93	990	874	1,413	539	56	930	33	33	996
Total	1,534	2,804	1,270	133	1,667	126	126	1,919	2,161	3,193	1,032	107	2,268	226	226	2,720
East Leg																
Approach	115	308	193	20	135	0	0	135	304	895	591	61	365	0	0	365
Departure	490	1,028	538	55	545	0	0	545	291	677	386	40	331	0	0	331
Total	605	1,336	731	75	680	0	0	680	595	1,572	977	101	696	0	0	696
West Leg																
Approach	408	806	398	41	449	0	0	449	421	1,207	786	82	503	0	0	503
Departure	226	747	521	54	280	0	0	280	156	668	512	53	209	0	0	209
Total	634	1,553	919	95	729	0	0	729	577	1,875	1,298	135	712	0	0	712
Total Approaches																
Approach	2,460	4,998	2,538	263	2,723	126	126	2,975	2,945	5,606	2,661	276	3,221	226	226	3,673
Departure	2,460	4,998	2,538	263	2,723	126	126	2,975	2,945	5,606	2,661	276	3,221	226	226	3,673
Total	4,920	9,996	5,076	526	5,446	252	252	5,950	5,890	11,212	5,322	552	6,442	452	452	7,346

Table D-4 - Scenario 1 Construction Year 2025 Peak Hour PCE Volume Summary

	AM Peak Hour								PM Peak Hour							
	Existing (2022) No Project	Build-Out (2051) Volumes	Growth From Exist to Build-Out	Growth From Exist to (2025)	2025 Traffic Volumes	Construction Trips T2	Construction Trips T4	2025 w/ Construction Scenario 1	Existing (2022) No Project	Build-Out (2051) Volumes	Growth From Exist to Build-Out	Growth From Exist to (2025)	2025 Traffic Volumes	Construction Trips T2	Construction Trips T4	2025 w/ Construction Scenario 1
4 Archibald Avenue - Terminal Way/Airport Drive																
NBL	18	67	49	5	23	0	0	23	12	13	1	0	12	0	0	12
NBT	30	322	292	30	60	0	33	93	73	98	25	3	76	0	193	269
NBR	12	62	50	5	17	0	0	17	49	57	8	1	50	0	0	50
SBL	244	396	152	16	260	0	93	353	407	637	230	24	431	0	33	464
SBT	104	497	393	41	145	93	0	238	99	296	197	20	119	33	0	152
SBR	393	451	58	6	399	0	0	399	368	480	112	12	380	0	0	380
EBL	422	762	340	35	457	33	0	490	724	903	179	19	743	193	0	936
EBT	332	354	22	2	334	0	0	334	759	810	51	5	764	0	0	764
EBR	20	52	32	3	23	0	0	23	17	35	18	2	19	0	0	19
WBL	52	70	18	2	54	0	0	54	56	146	90	9	65	0	0	65
WBT	341	372	31	3	344	0	0	344	455	516	61	6	461	0	0	461
WBR	342	376	34	4	346	0	0	346	490	779	289	30	520	0	0	520
North Leg																
Approach	741	1,344	603	63	804	93	93	990	874	1,413	539	56	930	33	33	996
Departure	794	1,460	666	69	863	33	33	929	1,287	1,780	493	52	1,339	193	193	1,725
Total	1,535	2,804	1,269	132	1,667	126	126	1,919	2,161	3,193	1,032	108	2,269	226	226	2,721
South Leg																
Approach	60	451	391	40	100	0	33	133	134	168	34	4	138	0	193	331
Departure	176	619	443	46	222	93	0	315	172	477	305	31	203	33	0	236
Total	236	1,070	834	86	322	93	33	448	306	645	339	35	341	33	193	567
East Leg																
Approach	735	818	83	9	744	0	0	744	1,001	1,441	440	45	1,046	0	0	1,046
Departure	588	812	224	23	611	0	93	704	1,215	1,504	289	30	1,245	0	33	1,278
Total	1,323	1,630	307	32	1,355	0	93	1,448	2,216	2,945	729	75	2,291	0	33	2,324
West Leg																
Approach	774	1,168	394	40	814	33	0	847	1,500	1,748	248	26	1,526	193	0	1,719
Departure	752	890	138	14	766	0	0	766	835	1,009	174	18	853	0	0	853
Total	1,526	2,058	532	54	1,580	33	0	1,613	2,335	2,757	422	44	2,379	193	0	2,572
Total Approaches																
Approach	2,310	3,781	1,471	152	2,462	126	126	2,714	3,509	4,770	1,261	131	3,640	226	226	4,092
Departure	2,310	3,781	1,471	152	2,462	126	126	2,714	3,509	4,770	1,261	131	3,640	226	226	4,092
Total	4,620	7,562	2,942	304	4,924	252	252	5,428	7,018	9,540	2,522	262	7,280	452	452	8,184

Table D-4 - Scenario 1 Construction Year 2025 Peak Hour PCE Volume Summary

	AM Peak Hour								PM Peak Hour							
	Existing (2022) No Project	Build-Out (2051) Volumes	Growth From Exist to Build-Out	Growth From Exist to (2025)	2025 Traffic Volumes	Construction Trips T2	Construction Trips T4	2025 w/ Construction Scenario 1	Existing (2022) No Project	Build-Out (2051) Volumes	Growth From Exist to Build-Out	Growth From Exist to (2025)	2025 Traffic Volumes	Construction Trips T2	Construction Trips T4	2025 w/ Construction Scenario 1
5 East Terminal Way/Airport Drive [East]																
NBL	72	78	6	1	73	0	0	73	123	131	8	1	124	0	0	124
NBT	0	0	0	0	0	0	0	0	0	0	0	0	0	0	0	0
NBR	97	476	379	39	136	0	0	136	219	228	9	1	220	0	0	220
SBL	0	0	0	0	0	0	0	0	0	0	0	0	0	0	0	0
SBT	0	0	0	0	0	0	0	0	0	0	0	0	0	0	0	0
SBR	0	0	0	0	0	0	0	0	0	0	0	0	0	0	0	0
EBL	0	0	0	0	0	0	0	0	0	0	0	0	0	0	0	0
EBT	579	777	198	20	599	0	0	599	1,208	1,491	283	29	1,237	0	0	1,237
EBR	9	35	26	3	12	0	93	105	7	12	5	1	8	0	33	41
WBL	73	634	561	58	131	0	0	131	65	293	228	24	89	0	0	89
WBT	663	740	77	8	671	0	0	671	878	1,310	432	45	923	0	0	923
WBR	0	0	0	0	0	0	0	0	0	0	0	0	0	0	0	0
North Leg																
Approach	0	0	0	0	0	0	0	0	0	0	0	0	0	0	0	0
Departure	0	0	0	0	0	0	0	0	0	0	0	0	0	0	0	0
Total	0	0	0	0	0	0	0	0	0	0	0	0	0	0	0	0
South Leg																
Approach	169	554	385	40	209	0	0	209	342	359	17	2	344	0	0	344
Departure	82	669	587	61	143	0	93	236	72	305	233	25	97	0	33	130
Total	251	1,223	972	101	352	0	93	445	414	664	250	27	441	0	33	474
East Leg																
Approach	736	1,374	638	66	802	0	0	802	943	1,603	660	69	1,012	0	0	1,012
Departure	676	1,253	577	59	735	0	0	735	1,427	1,719	292	30	1,457	0	0	1,457
Total	1,412	2,627	1,215	125	1,537	0	0	1,537	2,370	3,322	952	99	2,469	0	0	2,469
West Leg																
Approach	588	812	224	23	611	0	93	704	1,215	1,503	288	30	1,245	0	33	1,278
Departure	735	818	83	9	744	0	0	744	1,001	1,441	440	46	1,047	0	0	1,047
Total	1,323	1,630	307	32	1,355	0	93	1,448	2,216	2,944	728	76	2,292	0	33	2,325
Total Approaches																
Approach	1,493	2,740	1,247	129	1,622	0	93	1,715	2,500	3,465	965	101	2,601	0	33	2,634
Departure	1,493	2,740	1,247	129	1,622	0	93	1,715	2,500	3,465	965	101	2,601	0	33	2,634
Total	2,986	5,480	2,494	258	3,244	0	186	3,430	5,000	6,930	1,930	202	5,202	0	66	5,268

APPENDIX D5

Table D-5 - Scenario 2A Construction Year 2025 Peak Hour PCE Volume Summary

	AM Peak Hour								PM Peak Hour							
	Existing (2022) No Project	Build-Out (2051) Volumes	Growth From Exist to Build-Out	Growth From Exist to (2025)	2025 Traffic Volumes	Construction Trips Station	Construction Trips Vent Option 2	2025 w/ Construction Scenario 2A	Existing (2022) No Project	Build-Out (2051) Volumes	Growth From Exist to Build-Out	Growth From Exist to (2025)	2025 Traffic Volumes	Construction Trips Station	Construction Trips Vent Option 2	2025 w/ Construction Scenario 2A
6 Milliken Avenue/7th Street																
NBL	98	106	8	1	99	93	0	192	70	176	106	11	81	33	0	114
NBT	779	788	9	1	780	0	0	780	1,670	1,839	169	17	1,687	0	0	1,687
NBR	40	42	2	0	40	0	0	40	8	8	0	0	8	0	0	8
SBL	16	20	4	0	16	0	0	16	14	19	5	1	15	0	0	15
SBT	1,106	1,208	102	11	1,117	0	0	1,117	990	1,034	44	5	995	0	0	995
SBR	7	12	5	1	8	0	0	8	7	34	27	3	10	0	0	10
EBL	42	151	109	11	53	0	0	53	124	189	65	7	131	0	0	131
EBT	0	0	0	0	0	0	0	0	2	2	0	0	2	0	0	2
EBR	23	54	31	3	26	33	0	59	79	83	4	0	79	193	0	272
WBL	11	12	1	0	11	0	0	11	26	27	1	0	26	0	0	26
WBT	0	0	0	0	0	0	0	0	3	8	5	1	4	0	0	4
WBR	9	12	3	0	9	0	0	9	29	35	6	1	30	0	0	30
							0	0							0	0
North Leg																
Approach	1,129	1,240	111	12	1,141	0	0	1,141	1,011	1,087	76	9	1,020	0	0	1,020
Departure	830	951	121	12	842	0	0	842	1,823	2,063	240	25	1,848	0	0	1,848
Total	1,959	2,191	232	24	1,983	0	0	1,983	2,834	3,150	316	34	2,868	0	0	2,868
South Leg																
Approach	917	936	19	2	919	93	0	1,012	1,748	2,023	275	28	1,776	33	0	1,809
Departure	1,140	1,274	134	14	1,154	33	0	1,187	1,095	1,144	49	5	1,100	193	0	1,293
Total	2,057	2,210	153	16	2,073	126	0	2,199	2,843	3,167	324	33	2,876	226	0	3,102
East Leg																
Approach	20	24	4	0	20	0	0	20	58	70	12	2	60	0	0	60
Departure	56	62	6	0	56	0	0	56	24	29	5	1	25	0	0	25
Total	76	86	10	0	76	0	0	76	82	99	17	3	85	0	0	85
West Leg																
Approach	65	205	140	14	79	33	0	112	205	274	69	7	212	193	0	405
Departure	105	118	13	2	107	93	0	200	80	218	138	15	95	33	0	128
Total	170	323	153	16	186	126	0	312	285	492	207	22	307	226	0	533
Total Approaches																
Approach	2,131	2,405	274	28	2,159	126	0	2,285	3,022	3,454	432	46	3,068	226	0	3,294
Departure	2,131	2,405	274	28	2,159	126	0	2,285	3,022	3,454	432	46	3,068	226	0	3,294
Total	4,262	4,810	548	56	4,318	252	0	4,570	6,044	6,908	864	92	6,136	452	0	6,588

Table D-5 - Scenario 2A Construction Year 2025 Peak Hour PCE Volume Summary

	AM Peak Hour								PM Peak Hour							
	Existing (2022) No Project	Build-Out (2051) Volumes	Growth From Exist to Build-Out	Growth From Exist to (2025)	2025 Traffic Volumes	Construction Trips Station	Construction Trips Vent Option 2	2025 w/ Construction Scenario 2A	Existing (2022) No Project	Build-Out (2051) Volumes	Growth From Exist to Build-Out	Growth From Exist to (2025)	2025 Traffic Volumes	Construction Trips Station	Construction Trips Vent Option 2	2025 w/ Construction Scenario 2A
7 Milliken Avenue/6th Street																
NBL	154	160	6	1	155	0	0	155	156	274	118	12	168	0	0	168
NBT	717	753	36	4	721	93	0	814	1,274	1,566	292	30	1,304	33	0	1,337
NBR	105	110	5	1	106	0	0	106	89	249	160	17	106	0	0	106
SBL	132	139	7	1	133	0	0	133	153	201	48	5	158	0	0	158
SBT	731	905	174	18	749	33	0	782	779	818	39	4	783	193	0	976
SBR	272	286	14	1	273	0	0	273	127	133	6	1	128	0	0	128
EBL	121	189	68	7	128	0	0	128	363	381	18	2	365	0	0	365
EBT	225	298	73	8	233	0	0	233	478	839	361	37	515	0	0	515
EBR	89	221	132	14	103	0	0	103	167	175	8	1	168	0	0	168
WBL	73	142	69	7	80	0	0	80	85	89	4	0	85	0	0	85
WBT	253	373	120	12	265	0	0	265	273	321	48	5	278	0	0	278
WBR	99	121	22	2	101	0	0	101	170	179	9	1	171	0	0	171
							0	0							0	0
North Leg																
Approach	1,135	1,330	195	20	1,155	33	0	1,188	1,059	1,152	93	10	1,069	193	0	1,262
Departure	937	1,063	126	13	950	93	0	1,043	1,807	2,126	319	33	1,840	33	0	1,873
Total	2,072	2,393	321	33	2,105	126	0	2,231	2,866	3,278	412	43	2,909	226	0	3,135
South Leg																
Approach	976	1,023	47	6	982	93	0	1,075	1,519	2,089	570	59	1,578	33	0	1,611
Departure	893	1,268	375	39	932	33	0	965	1,031	1,082	51	5	1,036	193	0	1,229
Total	1,869	2,291	422	45	1,914	126	0	2,040	2,550	3,171	621	64	2,614	226	0	2,840
East Leg																
Approach	425	636	211	21	446	0	0	446	528	589	61	6	534	0	0	534
Departure	462	547	85	10	472	0	0	472	720	1,289	569	59	779	0	0	779
Total	887	1,183	296	31	918	0	0	918	1,248	1,878	630	65	1,313	0	0	1,313
West Leg																
Approach	435	708	273	29	464	0	0	464	1,008	1,395	387	40	1,048	0	0	1,048
Departure	679	819	140	14	693	0	0	693	556	728	172	18	574	0	0	574
Total	1,114	1,527	413	43	1,157	0	0	1,157	1,564	2,123	559	58	1,622	0	0	1,622
Total Approaches																
Approach	2,971	3,697	726	76	3,047	126	0	3,173	4,114	5,225	1,111	115	4,229	226	0	4,455
Departure	2,971	3,697	726	76	3,047	126	0	3,173	4,114	5,225	1,111	115	4,229	226	0	4,455
Total	5,942	7,394	1,452	152	6,094	252	0	6,346	8,228	10,450	2,222	230	8,458	452	0	8,910

Table D-5 - Scenario 2A Construction Year 2025 Peak Hour PCE Volume Summary

	AM Peak Hour								PM Peak Hour							
	Existing (2022) No Project	Build-Out (2051) Volumes	Growth From Exist to Build-Out	Growth From Exist to (2025)	2025 Traffic Volumes	Construction Trips Station	Construction Trips Vent Option 2	2025 w/ Construction Scenario 2A	Existing (2022) No Project	Build-Out (2051) Volumes	Growth From Exist to Build-Out	Growth From Exist to (2025)	2025 Traffic Volumes	Construction Trips Station	Construction Trips Vent Option 2	2025 w/ Construction Scenario 2A
8 Milliken Avenue/4th Street																
NBL	164	328	164	17	181	0	0	181	206	523	317	33	239	0	0	239
NBT	725	761	36	4	729	93	0	822	1,046	1,630	584	60	1,106	33	0	1,139
NBR	117	219	102	11	128	0	0	128	321	562	241	25	346	0	0	346
SBL	148	198	50	5	153	0	0	153	329	345	16	2	331	0	0	331
SBT	774	1,183	409	42	816	33	0	849	835	877	42	4	839	193	0	1,032
SBR	66	95	29	3	69	0	0	69	87	91	4	0	87	0	0	87
EBL	114	120	6	1	115	0	0	115	291	371	80	8	299	0	0	299
EBT	239	461	222	23	262	0	0	262	908	1,300	392	41	949	0	0	949
EBR	120	265	145	15	135	0	0	135	265	644	379	39	304	0	0	304
WBL	397	542	145	15	412	0	33	445	314	463	149	15	329	0	33	362
WBT	876	1,119	243	25	901	0	0	901	576	726	150	16	592	0	0	592
WBR	299	314	15	2	301	0	0	301	201	211	10	1	202	0	0	202
							0	0							0	0
North Leg																
Approach	988	1,476	488	50	1,038	33	0	1,071	1,251	1,313	62	6	1,257	193	0	1,450
Departure	1,138	1,195	57	7	1,145	93	0	1,238	1,538	2,212	674	69	1,607	33	0	1,640
Total	2,126	2,671	545	57	2,183	126	0	2,309	2,789	3,525	736	75	2,864	226	0	3,090
South Leg																
Approach	1,006	1,308	302	32	1,038	93	0	1,131	1,573	2,715	1,142	118	1,691	33	0	1,724
Departure	1,291	1,990	699	72	1,363	33	33	1,429	1,414	1,984	570	58	1,472	193	33	1,698
Total	2,297	3,298	1,001	104	2,401	126	33	2,560	2,987	4,699	1,712	176	3,163	226	33	3,422
East Leg																
Approach	1,572	1,975	403	42	1,614	0	33	1,647	1,091	1,400	309	32	1,123	0	33	1,156
Departure	504	878	374	39	543	0	0	543	1,558	2,207	649	68	1,626	0	0	1,626
Total	2,076	2,853	777	81	2,157	0	33	2,190	2,649	3,607	958	100	2,749	0	33	2,782
West Leg																
Approach	473	846	373	39	512	0	0	512	1,464	2,315	851	88	1,552	0	0	1,552
Departure	1,106	1,542	436	45	1,151	0	0	1,151	869	1,340	471	49	918	0	0	918
Total	1,579	2,388	809	84	1,663	0	0	1,663	2,333	3,655	1,322	137	2,470	0	0	2,470
Total Approaches																
Approach	4,039	5,605	1,566	163	4,202	126	33	4,361	5,379	7,743	2,364	244	5,623	226	33	5,882
Departure	4,039	5,605	1,566	163	4,202	126	33	4,361	5,379	7,743	2,364	244	5,623	226	33	5,882
Total	8,078	11,210	3,132	326	8,404	252	66	8,722	10,758	15,486	4,728	488	11,246	452	66	11,764

Table D-5 - Scenario 2A Construction Year 2025 Peak Hour PCE Volume Summary

	AM Peak Hour								PM Peak Hour							
	Existing (2022) No Project	Build-Out (2051) Volumes	Growth From Exist to Build-Out	Growth From Exist to (2025)	2025 Traffic Volumes	Construction Trips Station	Construction Trips Vent Option 2	2025 w/ Construction Scenario 2A	Existing (2022) No Project	Build-Out (2051) Volumes	Growth From Exist to Build-Out	Growth From Exist to (2025)	2025 Traffic Volumes	Construction Trips Station	Construction Trips Vent Option 2	2025 w/ Construction Scenario 2A
9 Milliken Avenue/Concours Street																
NBL	106	135	29	3	109	0	0	109	151	157	6	1	152	0	0	152
NBT	830	872	42	4	834	93	0	927	1,197	1,925	728	75	1,272	33	0	1,305
NBR	39	41	2	0	39	0	0	39	102	109	7	1	103	0	0	103
SBL	56	62	6	1	57	0	0	57	151	220	69	7	158	0	0	158
SBT	888	1,285	397	41	929	33	33	995	873	1,059	186	19	892	193	33	1,118
SBR	229	522	293	30	259	0	0	259	123	174	51	5	128	0	0	128
EBL	68	142	74	8	76	0	0	76	296	621	325	34	330	0	0	330
EBT	31	43	12	1	32	0	0	32	98	137	39	4	102	0	0	102
EBR	56	101	45	5	61	0	0	61	145	169	24	2	147	0	0	147
WBL	48	72	24	2	50	0	0	50	106	121	15	2	108	0	0	108
WBT	47	111	64	7	54	0	0	54	70	93	23	2	72	0	0	72
WBR	54	93	39	4	58	0	0	58	86	176	90	9	95	0	0	95
							0	0							0	0
North Leg																
Approach	1,173	1,869	696	72	1,245	33	33	1,311	1,147	1,453	306	31	1,178	193	33	1,404
Departure	952	1,107	155	16	968	93	0	1,061	1,579	2,722	1,143	118	1,697	33	0	1,730
Total	2,125	2,976	851	88	2,213	126	33	2,372	2,726	4,175	1,449	149	2,875	226	33	3,134
South Leg																
Approach	975	1,048	73	7	982	93	0	1,075	1,450	2,191	741	77	1,527	33	0	1,560
Departure	992	1,458	466	48	1,040	33	33	1,106	1,124	1,349	225	23	1,147	193	33	1,373
Total	1,967	2,506	539	55	2,022	126	33	2,181	2,574	3,540	966	100	2,674	226	33	2,933
East Leg																
Approach	149	276	127	13	162	0	0	162	262	390	128	13	275	0	0	275
Departure	126	146	20	2	128	0	0	128	351	466	115	12	363	0	0	363
Total	275	422	147	15	290	0	0	290	613	856	243	25	638	0	0	638
West Leg																
Approach	155	286	131	14	169	0	0	169	539	927	388	40	579	0	0	579
Departure	382	768	386	40	422	0	0	422	344	424	80	8	352	0	0	352
Total	537	1,054	517	54	591	0	0	591	883	1,351	468	48	931	0	0	931
Total Approaches																
Approach	2,452	3,479	1,027	106	2,558	126	33	2,717	3,398	4,961	1,563	161	3,559	226	33	3,818
Departure	2,452	3,479	1,027	106	2,558	126	33	2,717	3,398	4,961	1,563	161	3,559	226	33	3,818
Total	4,904	6,958	2,054	212	5,116	252	66	5,434	6,796	9,922	3,126	322	7,118	452	66	7,636

Table D-5 - Scenario 2A Construction Year 2025 Peak Hour PCE Volume Summary

	AM Peak Hour								PM Peak Hour							
	Existing (2022) No Project	Build-Out (2051) Volumes	Growth From Exist to Build-Out	Growth From Exist to (2025)	2025 Traffic Volumes	Construction Trips Station	Construction Trips Vent Option 2	2025 w/ Construction Scenario 2A	Existing (2022) No Project	Build-Out (2051) Volumes	Growth From Exist to Build-Out	Growth From Exist to (2025)	2025 Traffic Volumes	Construction Trips Station	Construction Trips Vent Option 2	2025 w/ Construction Scenario 2A
10 Milliken Avenue/Inland Empire Boulevard - Mall Drive																
NBL	316	346	30	3	319	0	0	319	261	290	29	3	264	0	0	264
NBT	976	1,025	49	5	981	93	0	1,074	1,247	1,748	501	52	1,299	33	0	1,332
NBR	67	70	3	0	67	0	0	67	249	261	12	1	250	0	0	250
SBL	30	42	12	1	31	0	0	31	90	95	5	1	91	0	0	91
SBT	895	1,264	369	38	933	33	33	999	1,173	1,405	232	24	1,197	193	33	1,423
SBR	120	203	83	9	129	0	0	129	80	85	5	1	81	0	0	81
EBL	49	52	3	0	49	0	0	49	208	423	215	22	230	0	0	230
EBT	43	44	1	0	43	0	0	43	211	272	61	6	217	0	0	217
EBR	78	80	2	0	78	0	0	78	275	498	223	23	298	0	0	298
WBL	58	64	6	1	59	0	0	59	175	188	13	1	176	0	0	176
WBT	76	100	24	2	78	0	0	78	80	84	4	0	80	0	0	80
WBR	24	28	4	0	24	0	0	24	78	94	16	2	80	0	0	80
							0	0							0	0
North Leg																
Approach	1,045	1,509	464	48	1,093	33	33	1,159	1,343	1,585	242	26	1,369	193	33	1,595
Departure	1,049	1,105	56	5	1,054	93	0	1,147	1,533	2,265	732	76	1,609	33	0	1,642
Total	2,094	2,614	520	53	2,147	126	33	2,306	2,876	3,850	974	102	2,978	226	33	3,237
South Leg																
Approach	1,359	1,441	82	8	1,367	93	0	1,460	1,757	2,299	542	56	1,813	33	0	1,846
Departure	1,031	1,408	377	39	1,070	33	33	1,136	1,623	2,091	468	48	1,671	193	33	1,897
Total	2,390	2,849	459	47	2,437	126	33	2,596	3,380	4,390	1,010	104	3,484	226	33	3,743
East Leg																
Approach	158	192	34	3	161	0	0	161	333	366	33	3	336	0	0	336
Departure	140	156	16	1	141	0	0	141	550	628	78	8	558	0	0	558
Total	298	348	50	4	302	0	0	302	883	994	111	11	894	0	0	894
West Leg																
Approach	170	176	6	0	170	0	0	170	694	1,193	499	51	745	0	0	745
Departure	512	649	137	14	526	0	0	526	421	459	38	4	425	0	0	425
Total	682	825	143	14	696	0	0	696	1,115	1,652	537	55	1,170	0	0	1,170
Total Approaches																
Approach	2,732	3,318	586	59	2,791	126	33	2,950	4,127	5,443	1,316	136	4,263	226	33	4,522
Departure	2,732	3,318	586	59	2,791	126	33	2,950	4,127	5,443	1,316	136	4,263	226	33	4,522
Total	5,464	6,636	1,172	118	5,582	252	66	5,900	8,254	10,886	2,632	272	8,526	452	66	9,044

Table D-5 - Scenario 2A Construction Year 2025 Peak Hour PCE Volume Summary

	AM Peak Hour								PM Peak Hour							
	Existing (2022) No Project	Build-Out (2051) Volumes	Growth From Exist to Build-Out	Growth From Exist to (2025)	2025 Traffic Volumes	Construction Trips Station	Construction Trips Vent Option 2	2025 w/ Construction Scenario 2A	Existing (2022) No Project	Build-Out (2051) Volumes	Growth From Exist to Build-Out	Growth From Exist to (2025)	2025 Traffic Volumes	Construction Trips Station	Construction Trips Vent Option 2	2025 w/ Construction Scenario 2A
11 Milliken Avenue/I-10 Westbound Ramps - Ontario Mills Parkway																
NBL	354	372	18	2	356	0	30	386	232	295	63	7	239	0	80	319
NBT	787	826	39	4	791	47	0	838	853	1,327	474	49	902	17	0	919
NBR	310	326	16	2	312	0	0	312	340	678	338	35	375	0	0	375
SBL	101	114	13	1	102	0	0	102	236	348	112	12	248	0	0	248
SBT	595	931	336	35	630	17	33	680	864	1,110	246	25	889	97	33	1,019
SBR	218	252	34	4	222	17	0	239	434	456	22	2	436	97	0	533
EBL	365	474	109	11	376	47	0	423	693	714	21	2	695	17	0	712
EBT	72	101	29	3	75	0	0	75	173	228	55	6	179	0	0	179
EBR	297	574	277	29	326	0	63	389	384	441	57	6	390	0	193	583
WBL	129	227	98	10	139	0	0	139	214	245	31	3	217	0	0	217
WBT	164	212	48	5	169	0	0	169	210	221	11	1	211	0	0	211
WBR	31	37	6	1	32	0	0	32	37	38	1	0	37	0	0	37
							0	0							0	0
North Leg																
Approach	914	1,297	383	40	954	34	33	1,021	1,534	1,914	380	39	1,573	194	33	1,800
Departure	1,183	1,337	154	16	1,199	94	0	1,293	1,583	2,079	496	51	1,634	34	0	1,668
Total	2,097	2,634	537	56	2,153	128	33	2,314	3,117	3,993	876	90	3,207	228	33	3,468
South Leg																
Approach	1,451	1,524	73	8	1,459	47	30	1,536	1,425	2,300	875	91	1,516	17	80	1,613
Departure	1,021	1,732	711	74	1,095	17	96	1,208	1,462	1,796	334	34	1,496	97	226	1,819
Total	2,472	3,256	784	82	2,554	64	126	2,744	2,887	4,096	1,209	125	3,012	114	306	3,432
East Leg																
Approach	324	476	152	16	340	0	0	340	461	504	43	4	465	0	0	465
Departure	483	541	58	6	489	0	0	489	749	1,254	505	53	802	0	0	802
Total	807	1,017	210	22	829	0	0	829	1,210	1,758	548	57	1,267	0	0	1,267
West Leg																
Approach	734	1,149	415	43	777	47	63	887	1,250	1,383	133	14	1,264	17	193	1,474
Departure	736	836	100	11	747	17	30	794	876	972	96	10	886	97	80	1,063
Total	1,470	1,985	515	54	1,524	64	93	1,681	2,126	2,355	229	24	2,150	114	273	2,537
Total Approaches																
Approach	3,423	4,446	1,023	107	3,530	128	126	3,784	4,670	6,101	1,431	148	4,818	228	306	5,352
Departure	3,423	4,446	1,023	107	3,530	128	126	3,784	4,670	6,101	1,431	148	4,818	228	306	5,352
Total	6,846	8,892	2,046	214	7,060	256	252	7,568	9,340	12,202	2,862	296	9,636	456	612	10,704

Table D-5 - Scenario 2A Construction Year 2025 Peak Hour PCE Volume Summary

	AM Peak Hour								PM Peak Hour							
	Existing (2022) No Project	Build-Out (2051) Volumes	Growth From Exist to Build-Out	Growth From Exist to (2025)	2025 Traffic Volumes	Construction Trips Station	Construction Trips Vent Option 2	2025 w/ Construction Scenario 2A	Existing (2022) No Project	Build-Out (2051) Volumes	Growth From Exist to Build-Out	Growth From Exist to (2025)	2025 Traffic Volumes	Construction Trips Station	Construction Trips Vent Option 2	2025 w/ Construction Scenario 2A
12 Milliken Avenue/I-10 Eastbound Ramps																
NBL	267	280	13	1	268	0	0	268	453	463	10	1	454	0	0	454
NBT	856	899	43	4	860	0	0	860	1,138	1,929	791	82	1,220	0	80	1,300
NBR	0	0	0	0	0	0	0	0	0	0	0	0	0	0	0	0
SBL	0	0	0	0	0	0	0	0	0	0	0	0	0	0	0	0
SBT	799	1,499	700	72	871	0	0	871	993	1,241	248	26	1,019	0	80	1,099
SBR	222	233	11	1	223	17	33	273	469	555	86	9	478	97	113	688
EBL	595	625	30	3	598	47	30	675	287	371	84	9	296	17	0	313
EBT	0	0	0	0	0	0	0	0	0	0	0	0	0	0	0	0
EBR	573	818	245	25	598	0	0	598	307	322	15	2	309	0	0	309
WBL	0	0	0	0	0	0	0	0	0	0	0	0	0	0	0	0
WBT	0	0	0	0	0	0	0	0	0	0	0	0	0	0	0	0
WBR	0	0	0	0	0	0	0	0	0	0	0	0	0	0	0	0
							0	0							0	0
North Leg																
Approach	1,021	1,732	711	73	1,094	17	33	1,144	1,462	1,796	334	35	1,497	97	193	1,787
Departure	1,451	1,524	73	7	1,458	47	30	1,535	1,425	2,300	875	91	1,516	17	80	1,613
Total	2,472	3,256	784	80	2,552	64	63	2,679	2,887	4,096	1,209	126	3,013	114	273	3,400
South Leg																
Approach	1,123	1,179	56	5	1,128	0	0	1,128	1,591	2,392	801	83	1,674	0	80	1,754
Departure	1,372	2,317	945	97	1,469	0	0	1,469	1,300	1,563	263	28	1,328	0	80	1,408
Total	2,495	3,496	1,001	102	2,597	0	0	2,597	2,891	3,955	1,064	111	3,002	0	160	3,162
East Leg																
Approach	0	0	0	0	0	0	0	0	0	0	0	0	0	0	0	0
Departure	0	0	0	0	0	0	0	0	0	0	0	0	0	0	0	0
Total	0	0	0	0	0	0	0	0	0	0	0	0	0	0	0	0
West Leg																
Approach	1,168	1,443	275	28	1,196	47	30	1,273	594	693	99	11	605	17	0	622
Departure	489	513	24	2	491	17	33	541	922	1,018	96	10	932	97	113	1,142
Total	1,657	1,956	299	30	1,687	64	63	1,814	1,516	1,711	195	21	1,537	114	113	1,764
Total Approaches																
Approach	3,312	4,354	1,042	106	3,418	64	63	3,545	3,647	4,881	1,234	129	3,776	114	273	4,163
Departure	3,312	4,354	1,042	106	3,418	64	63	3,545	3,647	4,881	1,234	129	3,776	114	273	4,163
Total	6,624	8,708	2,084	212	6,836	128	126	7,090	7,294	9,762	2,468	258	7,552	228	546	8,326

Table D-5 - Scenario 2A Construction Year 2025 Peak Hour PCE Volume Summary

	AM Peak Hour								PM Peak Hour							
	Existing (2022) No Project	Build-Out (2051) Volumes	Growth From Exist to Build-Out	Growth From Exist to (2025)	2025 Traffic Volumes	Construction Trips Station	Construction Trips Vent Option 2	2025 w/ Construction Scenario 2A	Existing (2022) No Project	Build-Out (2051) Volumes	Growth From Exist to Build-Out	Growth From Exist to (2025)	2025 Traffic Volumes	Construction Trips Station	Construction Trips Vent Option 2	2025 w/ Construction Scenario 2A
13 Milliken Avenue/Guasti Road																
NBL	162	170	8	1	163	0	0	163	118	146	28	3	121	0	0	121
NBT	624	654	30	3	627	0	0	627	1,155	1,778	623	64	1,219	0	0	1,219
NBR	121	154	33	3	124	0	0	124	118	171	53	5	123	0	0	123
SBL	139	257	118	12	151	0	0	151	218	272	54	6	224	0	0	224
SBT	906	1,644	738	76	982	0	0	982	766	952	186	19	785	0	0	785
SBR	327	416	89	9	336	0	0	336	316	338	22	2	318	0	0	318
EBL	260	273	13	1	261	0	0	261	267	321	54	6	273	0	0	273
EBT	15	20	5	1	16	0	0	16	23	26	3	0	23	0	0	23
EBR	150	192	42	4	154	0	0	154	152	171	19	2	154	0	0	154
WBL	81	118	37	4	85	0	0	85	80	130	50	5	85	0	0	85
WBT	18	19	1	0	18	0	0	18	20	28	8	1	21	0	0	21
WBR	239	253	14	1	240	0	0	240	169	293	124	13	182	0	0	182
SBU							0	0							80	80
North Leg																
Approach	1,372	2,317	945	97	1,469	0	0	1,469	1,300	1,562	262	27	1,327	0	0	1,327
Departure	1,123	1,180	57	5	1,128	0	0	1,128	1,591	2,392	801	83	1,674	0	0	1,674
Total	2,495	3,497	1,002	102	2,597	0	0	2,597	2,891	3,954	1,063	110	3,001	0	0	3,001
South Leg																
Approach	907	978	71	7	914	0	0	914	1,391	2,095	704	72	1,463	0	0	1,463
Departure	1,137	1,954	817	84	1,221	0	0	1,221	998	1,253	255	26	1,024	0	0	1,024
Total	2,044	2,932	888	91	2,135	0	0	2,135	2,389	3,348	959	98	2,487	0	0	2,487
East Leg																
Approach	338	390	52	5	343	0	0	343	269	451	182	19	288	0	0	288
Departure	275	431	156	16	291	0	0	291	359	469	110	11	370	0	0	370
Total	613	821	208	21	634	0	0	634	628	920	292	30	658	0	0	658
West Leg																
Approach	425	485	60	6	431	0	0	431	442	518	76	8	450	0	0	450
Departure	507	605	98	10	517	0	0	517	454	512	58	6	460	0	0	460
Total	932	1,090	158	16	948	0	0	948	896	1,030	134	14	910	0	0	910
Total Approaches																
Approach	3,042	4,170	1,128	115	3,157	0	0	3,157	3,402	4,626	1,224	126	3,528	0	0	3,528
Departure	3,042	4,170	1,128	115	3,157	0	0	3,157	3,402	4,626	1,224	126	3,528	0	0	3,528
Total	6,084	8,340	2,256	230	6,314	0	0	6,314	6,804	9,252	2,448	252	7,056	0	0	7,056

APPENDIX D6

Table D-6 - Scenario 2B Construction Year 2025 Peak Hour PCE Volume Summary

	AM Peak Hour								PM Peak Hour							
	Existing (2022) No Project	Build-Out (2051) Volumes	Growth From Exist to Build-Out	Growth From Exist to (2025)	2025 Traffic Volumes	Construction Trips Station	Construction Trips Vent Option 4	2025 w/ Construction Scenario 2B	Existing (2022) No Project	Build-Out (2051) Volumes	Growth From Exist to Build-Out	Growth From Exist to (2025)	2025 Traffic Volumes	Construction Trips Station	Construction Trips Vent Option 4	2025 w/ Construction Scenario 2B
6 Milliken Avenue/7th Street																
NBL	98	106	8	1	99	93	0	192	70	176	106	11	81	33	0	114
NBT	779	788	9	1	780	0	0	780	1,670	1,839	169	17	1,687	0	0	1,687
NBR	40	42	2	0	40	0	0	40	8	8	0	0	8	0	0	8
SBL	16	20	4	0	16	0	0	16	14	19	5	1	15	0	0	15
SBT	1,106	1,208	102	11	1,117	0	0	1,117	990	1,034	44	5	995	0	0	995
SBR	7	12	5	1	8	0	0	8	7	34	27	3	10	0	0	10
EBL	42	151	109	11	53	0	0	53	124	189	65	7	131	0	0	131
EBT	0	0	0	0	0	0	0	0	2	2	0	0	2	0	0	2
EBR	23	54	31	3	26	33	0	59	79	83	4	0	79	193	0	272
WBL	11	12	1	0	11	0	0	11	26	27	1	0	26	0	0	26
WBT	0	0	0	0	0	0	0	0	3	8	5	1	4	0	0	4
WBR	9	12	3	0	9	0	0	9	29	35	6	1	30	0	0	30
							0	0							0	0
North Leg																
Approach	1,129	1,240	111	12	1,141	0	0	1,141	1,011	1,087	76	9	1,020	0	0	1,020
Departure	830	951	121	12	842	0	0	842	1,823	2,063	240	25	1,848	0	0	1,848
Total	1,959	2,191	232	24	1,983	0	0	1,983	2,834	3,150	316	34	2,868	0	0	2,868
South Leg																
Approach	917	936	19	2	919	93	0	1,012	1,748	2,023	275	28	1,776	33	0	1,809
Departure	1,140	1,274	134	14	1,154	33	0	1,187	1,095	1,144	49	5	1,100	193	0	1,293
Total	2,057	2,210	153	16	2,073	126	0	2,199	2,843	3,167	324	33	2,876	226	0	3,102
East Leg																
Approach	20	24	4	0	20	0	0	20	58	70	12	2	60	0	0	60
Departure	56	62	6	0	56	0	0	56	24	29	5	1	25	0	0	25
Total	76	86	10	0	76	0	0	76	82	99	17	3	85	0	0	85
West Leg																
Approach	65	205	140	14	79	33	0	112	205	274	69	7	212	193	0	405
Departure	105	118	13	2	107	93	0	200	80	218	138	15	95	33	0	128
Total	170	323	153	16	186	126	0	312	285	492	207	22	307	226	0	533
Total Approaches																
Approach	2,131	2,405	274	28	2,159	126	0	2,285	3,022	3,454	432	46	3,068	226	0	3,294
Departure	2,131	2,405	274	28	2,159	126	0	2,285	3,022	3,454	432	46	3,068	226	0	3,294
Total	4,262	4,810	548	56	4,318	252	0	4,570	6,044	6,908	864	92	6,136	452	0	6,588

Table D-6 - Scenario 2B Construction Year 2025 Peak Hour PCE Volume Summary

	AM Peak Hour								PM Peak Hour							
	Existing (2022) No Project	Build-Out (2051) Volumes	Growth From Exist to Build-Out	Growth From Exist to (2025)	2025 Traffic Volumes	Construction Trips Station	Construction Trips Vent Option 4	2025 w/ Construction Scenario 2B	Existing (2022) No Project	Build-Out (2051) Volumes	Growth From Exist to Build-Out	Growth From Exist to (2025)	2025 Traffic Volumes	Construction Trips Station	Construction Trips Vent Option 4	2025 w/ Construction Scenario 2B
7 Milliken Avenue/6th Street																
NBL	154	160	6	1	155	0	0	155	156	274	118	12	168	0	0	168
NBT	717	753	36	4	721	93	0	814	1,274	1,566	292	30	1,304	33	0	1,337
NBR	105	110	5	1	106	0	0	106	89	249	160	17	106	0	0	106
SBL	132	139	7	1	133	0	0	133	153	201	48	5	158	0	0	158
SBT	731	905	174	18	749	33	0	782	779	818	39	4	783	193	0	976
SBR	272	286	14	1	273	0	0	273	127	133	6	1	128	0	0	128
EBL	121	189	68	7	128	0	0	128	363	381	18	2	365	0	0	365
EBT	225	298	73	8	233	0	0	233	478	839	361	37	515	0	0	515
EBR	89	221	132	14	103	0	0	103	167	175	8	1	168	0	0	168
WBL	73	142	69	7	80	0	0	80	85	89	4	0	85	0	0	85
WBT	253	373	120	12	265	0	0	265	273	321	48	5	278	0	0	278
WBR	99	121	22	2	101	0	0	101	170	179	9	1	171	0	0	171
							0	0							0	0
North Leg																
Approach	1,135	1,330	195	20	1,155	33	0	1,188	1,059	1,152	93	10	1,069	193	0	1,262
Departure	937	1,063	126	13	950	93	0	1,043	1,807	2,126	319	33	1,840	33	0	1,873
Total	2,072	2,393	321	33	2,105	126	0	2,231	2,866	3,278	412	43	2,909	226	0	3,135
South Leg																
Approach	976	1,023	47	6	982	93	0	1,075	1,519	2,089	570	59	1,578	33	0	1,611
Departure	893	1,268	375	39	932	33	0	965	1,031	1,082	51	5	1,036	193	0	1,229
Total	1,869	2,291	422	45	1,914	126	0	2,040	2,550	3,171	621	64	2,614	226	0	2,840
East Leg																
Approach	425	636	211	21	446	0	0	446	528	589	61	6	534	0	0	534
Departure	462	547	85	10	472	0	0	472	720	1,289	569	59	779	0	0	779
Total	887	1,183	296	31	918	0	0	918	1,248	1,878	630	65	1,313	0	0	1,313
West Leg																
Approach	435	708	273	29	464	0	0	464	1,008	1,395	387	40	1,048	0	0	1,048
Departure	679	819	140	14	693	0	0	693	556	728	172	18	574	0	0	574
Total	1,114	1,527	413	43	1,157	0	0	1,157	1,564	2,123	559	58	1,622	0	0	1,622
Total Approaches																
Approach	2,971	3,697	726	76	3,047	126	0	3,173	4,114	5,225	1,111	115	4,229	226	0	4,455
Departure	2,971	3,697	726	76	3,047	126	0	3,173	4,114	5,225	1,111	115	4,229	226	0	4,455
Total	5,942	7,394	1,452	152	6,094	252	0	6,346	8,228	10,450	2,222	230	8,458	452	0	8,910

Table D-6 - Scenario 2B Construction Year 2025 Peak Hour PCE Volume Summary

	AM Peak Hour								PM Peak Hour							
	Existing (2022) No Project	Build-Out (2051) Volumes	Growth From Exist to Build-Out	Growth From Exist to (2025)	2025 Traffic Volumes	Construction Trips Station	Construction Trips Vent Option 4	2025 w/ Construction Scenario 2B	Existing (2022) No Project	Build-Out (2051) Volumes	Growth From Exist to Build-Out	Growth From Exist to (2025)	2025 Traffic Volumes	Construction Trips Station	Construction Trips Vent Option 4	2025 w/ Construction Scenario 2B
8 Milliken Avenue/4th Street																
NBL	164	328	164	17	181	0	0	181	206	523	317	33	239	0	0	239
NBT	725	761	36	4	729	93	0	822	1,046	1,630	584	60	1,106	33	0	1,139
NBR	117	219	102	11	128	0	0	128	321	562	241	25	346	0	0	346
SBL	148	198	50	5	153	0	0	153	329	345	16	2	331	0	0	331
SBT	774	1,183	409	42	816	33	0	849	835	877	42	4	839	193	0	1,032
SBR	66	95	29	3	69	0	0	69	87	91	4	0	87	0	0	87
EBL	114	120	6	1	115	0	0	115	291	371	80	8	299	0	0	299
EBT	239	461	222	23	262	0	0	262	908	1,300	392	41	949	0	0	949
EBR	120	265	145	15	135	0	0	135	265	644	379	39	304	0	0	304
WBL	397	542	145	15	412	0	0	412	314	463	149	15	329	0	0	329
WBT	876	1,119	243	25	901	0	0	901	576	726	150	16	592	0	0	592
WBR	299	314	15	2	301	0	0	301	201	211	10	1	202	0	0	202
							0	0							0	0
North Leg																
Approach	988	1,476	488	50	1,038	33	0	1,071	1,251	1,313	62	6	1,257	193	0	1,450
Departure	1,138	1,195	57	7	1,145	93	0	1,238	1,538	2,212	674	69	1,607	33	0	1,640
Total	2,126	2,671	545	57	2,183	126	0	2,309	2,789	3,525	736	75	2,864	226	0	3,090
South Leg																
Approach	1,006	1,308	302	32	1,038	93	0	1,131	1,573	2,715	1,142	118	1,691	33	0	1,724
Departure	1,291	1,990	699	72	1,363	33	0	1,396	1,414	1,984	570	58	1,472	193	0	1,665
Total	2,297	3,298	1,001	104	2,401	126	0	2,527	2,987	4,699	1,712	176	3,163	226	0	3,389
East Leg																
Approach	1,572	1,975	403	42	1,614	0	0	1,614	1,091	1,400	309	32	1,123	0	0	1,123
Departure	504	878	374	39	543	0	0	543	1,558	2,207	649	68	1,626	0	0	1,626
Total	2,076	2,853	777	81	2,157	0	0	2,157	2,649	3,607	958	100	2,749	0	0	2,749
West Leg																
Approach	473	846	373	39	512	0	0	512	1,464	2,315	851	88	1,552	0	0	1,552
Departure	1,106	1,542	436	45	1,151	0	0	1,151	869	1,340	471	49	918	0	0	918
Total	1,579	2,388	809	84	1,663	0	0	1,663	2,333	3,655	1,322	137	2,470	0	0	2,470
Total Approaches																
Approach	4,039	5,605	1,566	163	4,202	126	0	4,328	5,379	7,743	2,364	244	5,623	226	0	5,849
Departure	4,039	5,605	1,566	163	4,202	126	0	4,328	5,379	7,743	2,364	244	5,623	226	0	5,849
Total	8,078	11,210	3,132	326	8,404	252	0	8,656	10,758	15,486	4,728	488	11,246	452	0	11,698

Table D-6 - Scenario 2B Construction Year 2025 Peak Hour PCE Volume Summary

	AM Peak Hour								PM Peak Hour							
	Existing (2022) No Project	Build-Out (2051) Volumes	Growth From Exist to Build-Out	Growth From Exist to (2025)	2025 Traffic Volumes	Construction Trips Station	Construction Trips Vent Option 4	2025 w/ Construction Scenario 2B	Existing (2022) No Project	Build-Out (2051) Volumes	Growth From Exist to Build-Out	Growth From Exist to (2025)	2025 Traffic Volumes	Construction Trips Station	Construction Trips Vent Option 4	2025 w/ Construction Scenario 2B
9 Milliken Avenue/Concours Street																
NBL	106	135	29	3	109	0	0	109	151	157	6	1	152	0	0	152
NBT	830	872	42	4	834	93	0	927	1,197	1,925	728	75	1,272	33	0	1,305
NBR	39	41	2	0	39	0	0	39	102	109	7	1	103	0	0	103
SBL	56	62	6	1	57	0	0	57	151	220	69	7	158	0	0	158
SBT	888	1,285	397	41	929	33	0	962	873	1,059	186	19	892	193	0	1,085
SBR	229	522	293	30	259	0	0	259	123	174	51	5	128	0	0	128
EBL	68	142	74	8	76	0	0	76	296	621	325	34	330	0	0	330
EBT	31	43	12	1	32	0	0	32	98	137	39	4	102	0	0	102
EBR	56	101	45	5	61	0	0	61	145	169	24	2	147	0	0	147
WBL	48	72	24	2	50	0	0	50	106	121	15	2	108	0	0	108
WBT	47	111	64	7	54	0	0	54	70	93	23	2	72	0	0	72
WBR	54	93	39	4	58	0	0	58	86	176	90	9	95	0	0	95
							0	0							0	0
North Leg																
Approach	1,173	1,869	696	72	1,245	33	0	1,278	1,147	1,453	306	31	1,178	193	0	1,371
Departure	952	1,107	155	16	968	93	0	1,061	1,579	2,722	1,143	118	1,697	33	0	1,730
Total	2,125	2,976	851	88	2,213	126	0	2,339	2,726	4,175	1,449	149	2,875	226	0	3,101
South Leg																
Approach	975	1,048	73	7	982	93	0	1,075	1,450	2,191	741	77	1,527	33	0	1,560
Departure	992	1,458	466	48	1,040	33	0	1,073	1,124	1,349	225	23	1,147	193	0	1,340
Total	1,967	2,506	539	55	2,022	126	0	2,148	2,574	3,540	966	100	2,674	226	0	2,900
East Leg																
Approach	149	276	127	13	162	0	0	162	262	390	128	13	275	0	0	275
Departure	126	146	20	2	128	0	0	128	351	466	115	12	363	0	0	363
Total	275	422	147	15	290	0	0	290	613	856	243	25	638	0	0	638
West Leg																
Approach	155	286	131	14	169	0	0	169	539	927	388	40	579	0	0	579
Departure	382	768	386	40	422	0	0	422	344	424	80	8	352	0	0	352
Total	537	1,054	517	54	591	0	0	591	883	1,351	468	48	931	0	0	931
Total Approaches																
Approach	2,452	3,479	1,027	106	2,558	126	0	2,684	3,398	4,961	1,563	161	3,559	226	0	3,785
Departure	2,452	3,479	1,027	106	2,558	126	0	2,684	3,398	4,961	1,563	161	3,559	226	0	3,785
Total	4,904	6,958	2,054	212	5,116	252	0	5,368	6,796	9,922	3,126	322	7,118	452	0	7,570

Table D-6 - Scenario 2B Construction Year 2025 Peak Hour PCE Volume Summary

	AM Peak Hour								PM Peak Hour							
	Existing (2022) No Project	Build-Out (2051) Volumes	Growth From Exist to Build-Out	Growth From Exist to (2025)	2025 Traffic Volumes	Construction Trips Station	Construction Trips Vent Option 4	2025 w/ Construction Scenario 2B	Existing (2022) No Project	Build-Out (2051) Volumes	Growth From Exist to Build-Out	Growth From Exist to (2025)	2025 Traffic Volumes	Construction Trips Station	Construction Trips Vent Option 4	2025 w/ Construction Scenario 2B
10 Milliken Avenue/Inland Empire Boulevard - Mall Drive																
NBL	316	346	30	3	319	0	0	319	261	290	29	3	264	0	0	264
NBT	976	1,025	49	5	981	93	0	1,074	1,247	1,748	501	52	1,299	33	0	1,332
NBR	67	70	3	0	67	0	0	67	249	261	12	1	250	0	0	250
SBL	30	42	12	1	31	0	0	31	90	95	5	1	91	0	0	91
SBT	895	1,264	369	38	933	33	0	966	1,173	1,405	232	24	1,197	193	0	1,390
SBR	120	203	83	9	129	0	0	129	80	85	5	1	81	0	0	81
EBL	49	52	3	0	49	0	0	49	208	423	215	22	230	0	0	230
EBT	43	44	1	0	43	0	0	43	211	272	61	6	217	0	0	217
EBR	78	80	2	0	78	0	0	78	275	498	223	23	298	0	0	298
WBL	58	64	6	1	59	0	0	59	175	188	13	1	176	0	0	176
WBT	76	100	24	2	78	0	0	78	80	84	4	0	80	0	0	80
WBR	24	28	4	0	24	0	0	24	78	94	16	2	80	0	0	80
							0	0							0	0
North Leg																
Approach	1,045	1,509	464	48	1,093	33	0	1,126	1,343	1,585	242	26	1,369	193	0	1,562
Departure	1,049	1,105	56	5	1,054	93	0	1,147	1,533	2,265	732	76	1,609	33	0	1,642
Total	2,094	2,614	520	53	2,147	126	0	2,273	2,876	3,850	974	102	2,978	226	0	3,204
South Leg																
Approach	1,359	1,441	82	8	1,367	93	0	1,460	1,757	2,299	542	56	1,813	33	0	1,846
Departure	1,031	1,408	377	39	1,070	33	0	1,103	1,623	2,091	468	48	1,671	193	0	1,864
Total	2,390	2,849	459	47	2,437	126	0	2,563	3,380	4,390	1,010	104	3,484	226	0	3,710
East Leg																
Approach	158	192	34	3	161	0	0	161	333	366	33	3	336	0	0	336
Departure	140	156	16	1	141	0	0	141	550	628	78	8	558	0	0	558
Total	298	348	50	4	302	0	0	302	883	994	111	11	894	0	0	894
West Leg																
Approach	170	176	6	0	170	0	0	170	694	1,193	499	51	745	0	0	745
Departure	512	649	137	14	526	0	0	526	421	459	38	4	425	0	0	425
Total	682	825	143	14	696	0	0	696	1,115	1,652	537	55	1,170	0	0	1,170
Total Approaches																
Approach	2,732	3,318	586	59	2,791	126	0	2,917	4,127	5,443	1,316	136	4,263	226	0	4,489
Departure	2,732	3,318	586	59	2,791	126	0	2,917	4,127	5,443	1,316	136	4,263	226	0	4,489
Total	5,464	6,636	1,172	118	5,582	252	0	5,834	8,254	10,886	2,632	272	8,526	452	0	8,978

Table D-6 - Scenario 2B Construction Year 2025 Peak Hour PCE Volume Summary

	AM Peak Hour								PM Peak Hour							
	Existing (2022) No Project	Build-Out (2051) Volumes	Growth From Exist to Build-Out	Growth From Exist to (2025)	2025 Traffic Volumes	Construction Trips Station	Construction Trips Vent Option 4	2025 w/ Construction Scenario 2B	Existing (2022) No Project	Build-Out (2051) Volumes	Growth From Exist to Build-Out	Growth From Exist to (2025)	2025 Traffic Volumes	Construction Trips Station	Construction Trips Vent Option 4	2025 w/ Construction Scenario 2B
11 Milliken Avenue/I-10 Westbound Ramps - Ontario Mills Parkway																
NBL	354	372	18	2	356	0	0	356	232	295	63	7	239	0	0	239
NBT	787	826	39	4	791	47	0	838	853	1,327	474	49	902	17	0	919
NBR	310	326	16	2	312	0	0	312	340	678	338	35	375	0	0	375
SBL	101	114	13	1	102	0	0	102	236	348	112	12	248	0	0	248
SBT	595	931	336	35	630	17	0	647	864	1,110	246	25	889	97	0	986
SBR	218	252	34	4	222	17	0	239	434	456	22	2	436	97	0	533
EBL	365	474	109	11	376	47	0	423	693	714	21	2	695	17	0	712
EBT	72	101	29	3	75	0	0	75	173	228	55	6	179	0	0	179
EBR	297	574	277	29	326	0	30	356	384	441	57	6	390	0	0	390
WBL	129	227	98	10	139	0	0	139	214	245	31	3	217	0	0	217
WBT	164	212	48	5	169	0	0	169	210	221	11	1	211	0	0	211
WBR	31	37	6	1	32	0	0	32	37	38	1	0	37	0	0	37
							0	0							0	0
North Leg																
Approach	914	1,297	383	40	954	34	0	988	1,534	1,914	380	39	1,573	194	0	1,767
Departure	1,183	1,337	154	16	1,199	94	0	1,293	1,583	2,079	496	51	1,634	34	0	1,668
Total	2,097	2,634	537	56	2,153	128	0	2,281	3,117	3,993	876	90	3,207	228	0	3,435
South Leg																
Approach	1,451	1,524	73	8	1,459	47	0	1,506	1,425	2,300	875	91	1,516	17	0	1,533
Departure	1,021	1,732	711	74	1,095	17	30	1,142	1,462	1,796	334	34	1,496	97	0	1,593
Total	2,472	3,256	784	82	2,554	64	30	2,648	2,887	4,096	1,209	125	3,012	114	0	3,126
East Leg																
Approach	324	476	152	16	340	0	0	340	461	504	43	4	465	0	0	465
Departure	483	541	58	6	489	0	0	489	749	1,254	505	53	802	0	0	802
Total	807	1,017	210	22	829	0	0	829	1,210	1,758	548	57	1,267	0	0	1,267
West Leg																
Approach	734	1,149	415	43	777	47	30	854	1,250	1,383	133	14	1,264	17	0	1,281
Departure	736	836	100	11	747	17	0	764	876	972	96	10	886	97	0	983
Total	1,470	1,985	515	54	1,524	64	30	1,618	2,126	2,355	229	24	2,150	114	0	2,264
Total Approaches																
Approach	3,423	4,446	1,023	107	3,530	128	30	3,688	4,670	6,101	1,431	148	4,818	228	0	5,046
Departure	3,423	4,446	1,023	107	3,530	128	30	3,688	4,670	6,101	1,431	148	4,818	228	0	5,046
Total	6,846	8,892	2,046	214	7,060	256	60	7,376	9,340	12,202	2,862	296	9,636	456	0	10,092

Table D-6 - Scenario 2B Construction Year 2025 Peak Hour PCE Volume Summary

	AM Peak Hour								PM Peak Hour							
	Existing (2022) No Project	Build-Out (2051) Volumes	Growth From Exist to Build-Out	Growth From Exist to (2025)	2025 Traffic Volumes	Construction Trips Station	Construction Trips Vent Option 4	2025 w/ Construction Scenario 2B	Existing (2022) No Project	Build-Out (2051) Volumes	Growth From Exist to Build-Out	Growth From Exist to (2025)	2025 Traffic Volumes	Construction Trips Station	Construction Trips Vent Option 4	2025 w/ Construction Scenario 2B
12 Milliken Avenue/I-10 Eastbound Ramps																
NBL	267	280	13	1	268	0	63	331	453	463	10	1	454	0	33	487
NBT	856	899	43	4	860	0	0	860	1,138	1,929	791	82	1,220	0	0	1,220
NBR	0	0	0	0	0	0	0	0	0	0	0	0	0	0	0	0
SBL	0	0	0	0	0	0	0	0	0	0	0	0	0	0	0	0
SBT	799	1,499	700	72	871	0	0	871	993	1,241	248	26	1,019	0	0	1,019
SBR	222	233	11	1	223	17	63	303	469	555	86	9	478	97	193	768
EBL	595	625	30	3	598	47	0	645	287	371	84	9	296	17	0	313
EBT	0	0	0	0	0	0	0	0	0	0	0	0	0	0	0	0
EBR	573	818	245	25	598	0	30	628	307	322	15	2	309	0	0	309
WBL	0	0	0	0	0	0	0	0	0	0	0	0	0	0	0	0
WBT	0	0	0	0	0	0	0	0	0	0	0	0	0	0	0	0
WBR	0	0	0	0	0	0	0	0	0	0	0	0	0	0	0	0
							0	0							0	0
North Leg																
Approach	1,021	1,732	711	73	1,094	17	63	1,174	1,462	1,796	334	35	1,497	97	193	1,787
Departure	1,451	1,524	73	7	1,458	47	0	1,505	1,425	2,300	875	91	1,516	17	0	1,533
Total	2,472	3,256	784	80	2,552	64	63	2,679	2,887	4,096	1,209	126	3,013	114	193	3,320
South Leg																
Approach	1,123	1,179	56	5	1,128	0	63	1,191	1,591	2,392	801	83	1,674	0	33	1,707
Departure	1,372	2,317	945	97	1,469	0	30	1,499	1,300	1,563	263	28	1,328	0	0	1,328
Total	2,495	3,496	1,001	102	2,597	0	93	2,690	2,891	3,955	1,064	111	3,002	0	33	3,035
East Leg																
Approach	0	0	0	0	0	0	0	0	0	0	0	0	0	0	0	0
Departure	0	0	0	0	0	0	0	0	0	0	0	0	0	0	0	0
Total	0	0	0	0	0	0	0	0	0	0	0	0	0	0	0	0
West Leg																
Approach	1,168	1,443	275	28	1,196	47	30	1,273	594	693	99	11	605	17	0	622
Departure	489	513	24	2	491	17	126	634	922	1,018	96	10	932	97	226	1,255
Total	1,657	1,956	299	30	1,687	64	156	1,907	1,516	1,711	195	21	1,537	114	226	1,877
Total Approaches																
Approach	3,312	4,354	1,042	106	3,418	64	156	3,638	3,647	4,881	1,234	129	3,776	114	226	4,116
Departure	3,312	4,354	1,042	106	3,418	64	156	3,638	3,647	4,881	1,234	129	3,776	114	226	4,116
Total	6,624	8,708	2,084	212	6,836	128	312	7,276	7,294	9,762	2,468	258	7,552	228	452	8,232

Table D-6 - Scenario 2B Construction Year 2025 Peak Hour PCE Volume Summary

	AM Peak Hour								PM Peak Hour							
	Existing (2022) No Project	Build-Out (2051) Volumes	Growth From Exist to Build-Out	Growth From Exist to (2025)	2025 Traffic Volumes	Construction Trips Station	Construction Trips Vent Option 4	2025 w/ Construction Scenario 2B	Existing (2022) No Project	Build-Out (2051) Volumes	Growth From Exist to Build-Out	Growth From Exist to (2025)	2025 Traffic Volumes	Construction Trips Station	Construction Trips Vent Option 4	2025 w/ Construction Scenario 2B
13 Milliken Avenue/Guasti Road																
NBL	162	170	8	1	163	0	0	163	118	146	28	3	121	0	0	121
NBT	624	654	30	3	627	0	33	660	1,155	1,778	623	64	1,219	0	33	1,252
NBR	121	154	33	3	124	0	0	124	118	171	53	5	123	0	0	123
SBL	139	257	118	12	151	0	0	151	218	272	54	6	224	0	0	224
SBT	906	1,644	738	76	982	0	0	982	766	952	186	19	785	0	0	785
SBR	327	416	89	9	336	0	0	336	316	338	22	2	318	0	0	318
EBL	260	273	13	1	261	0	0	261	267	321	54	6	273	0	0	273
EBT	15	20	5	1	16	0	0	16	23	26	3	0	23	0	0	23
EBR	150	192	42	4	154	0	0	154	152	171	19	2	154	0	0	154
WBL	81	118	37	4	85	0	0	85	80	130	50	5	85	0	0	85
WBT	18	19	1	0	18	0	0	18	20	28	8	1	21	0	0	21
WBR	239	253	14	1	240	0	0	240	169	293	124	13	182	0	0	182
SBU							30	30							0	0
North Leg																
Approach	1,372	2,317	945	97	1,469	0	0	1,469	1,300	1,562	262	27	1,327	0	0	1,327
Departure	1,123	1,180	57	5	1,128	0	33	1,161	1,591	2,392	801	83	1,674	0	33	1,707
Total	2,495	3,497	1,002	102	2,597	0	33	2,630	2,891	3,954	1,063	110	3,001	0	33	3,034
South Leg																
Approach	907	978	71	7	914	0	33	947	1,391	2,095	704	72	1,463	0	33	1,496
Departure	1,137	1,954	817	84	1,221	0	0	1,221	998	1,253	255	26	1,024	0	0	1,024
Total	2,044	2,932	888	91	2,135	0	33	2,168	2,389	3,348	959	98	2,487	0	33	2,520
East Leg																
Approach	338	390	52	5	343	0	0	343	269	451	182	19	288	0	0	288
Departure	275	431	156	16	291	0	0	291	359	469	110	11	370	0	0	370
Total	613	821	208	21	634	0	0	634	628	920	292	30	658	0	0	658
West Leg																
Approach	425	485	60	6	431	0	0	431	442	518	76	8	450	0	0	450
Departure	507	605	98	10	517	0	0	517	454	512	58	6	460	0	0	460
Total	932	1,090	158	16	948	0	0	948	896	1,030	134	14	910	0	0	910
Total Approaches																
Approach	3,042	4,170	1,128	115	3,157	0	33	3,190	3,402	4,626	1,224	126	3,528	0	33	3,561
Departure	3,042	4,170	1,128	115	3,157	0	33	3,190	3,402	4,626	1,224	126	3,528	0	33	3,561
Total	6,084	8,340	2,256	230	6,314	0	66	6,380	6,804	9,252	2,448	252	7,056	0	66	7,122

APPENDIX E1

```
ÉÍÍÍÍÍÍÍÍÍÍÍÍÍÍÍÍÍÍÍÍÍÍÍÍÍÍÍÍÍÍÍÍÍÍÍÍÍÍÍÍÍ»
º*****************************************º
º*   ECONOLITE CONTROL PRODUCTS, INC.    *º
º*             ASC/2-2000                *º
º*          Copyright (C) 1992           *º
º*                                       *º
º* City of Ontario, Traffic Engineering  *º
º*  ASC/2-2100  Configuration Ver. 1.1   *º
º*                                       *º
º*   SOFTWARE ASSY              VERSION   *º
º*   BOOT            32783        1.26   *º
º*   MAIN PROGRAM    32787        1.61   *º
º*                                       *º
º*                                       *º
º*                                       *º
º*                                       *º
º*****************************************º
ÈÍÍÍÍÍÍÍÍÍÍÍÍÍÍÍÍÍÍÍÍÍÍÍÍÍÍÍÍÍÍÍÍÍÍÍÍÍÍÍÍÍ¼

ÉÍÍÍÍÍÍÍÍÍÍÍÍÍÍÍÍÍÍÍÍÍÍÍÍÍÍÍÍÍÍÍÍÍÍÍÍÍÍÍÍÍ»
º           CONTROLLER SEQUENCE           º
º                                         º
º    ------------ PRIORITY ------------    º
º                                1  1  1    º
º    1..2..3..4..5..6..7..8..9..0..1..2    º
ºR1  1  2| 3  4| 9 10| 0  0  0  0  0  0    º
ºR2  5  6| 7  8|11 12| 0  0  0  0  0  0    º
ºCG   .  ^  .  ^  .  ^  .  .  .  .  .  .    º
º                                         º
º                                         º
ºR1,R2 = RING 1 AND 2 PHASE ASSIGNMENT.   º
º                                         º
ºCG    = BARRIER LOCATION BETWEEN         º
º        CONCURRENT PHASE TIMING GROUPS.  º
º                                         º
ºEND OF SUBMENU                           º
ÈÍÍÍÍÍÍÍÍÍÍÍÍÍÍÍÍÍÍÍÍÍÍÍÍÍÍÍÍÍÍÍÍÍÍÍÍÍÍÍÍÍ¼

ÉÍÍÍÍÍÍÍÍÍÍÍÍÍÍÍÍÍÍÍÍÍÍÍÍÍÍÍÍÍÍÍÍÍÍÍÍÍÍÍÍÍ»
º              PHASES IN USE              º
º                                         º
º                  ----- PHASE NUMBER ----º
º                                  1 1 1º
º                  1 2 3 4 5 6 7 8 9 0 1 2º
ºPHASES IN USE     . X X X . X . X . . . .º
ºEXCLUSIVE PED     . . . . . . . . . . . .º
º                                         º
º                                         º
º                                         º
º                                         º
º                                         º
º                                         º
º                                         º
º                                         º
ºEND OF SUBMENU                           º
ÈÍÍÍÍÍÍÍÍÍÍÍÍÍÍÍÍÍÍÍÍÍÍÍÍÍÍÍÍÍÍÍÍÍÍÍÍÍÍÍÍÍ¼

ÉÍÍÍÍÍÍÍÍÍÍÍÍÍÍÍÍÍÍÍÍÍÍÍÍÍÍÍÍÍÍÍÍÍÍÍÍÍÍÍÍÍ»
ºPHASE TO LOAD SWITCH (MMU) ASSIGNMENT    º
º                                         º
ºLOAD       SIGNAL    LOAD       SIGNAL   º
ºSWITCH     DRIVER    SWITCH     DRIVER   º
```

```
º(MMU)      GROUP     (MMU)      GROUP   º
ºCHANNEL PH/OLAP PED  CHANNEL PH/OLAP PEDº
º   1       0     .     9       0     . º
º   2       2     .    10       0     . º
º   3       3     .    11       0     . º
º   4       4     .    12       0     . º
º   5       0     .    13       0     . º
º   6       2     X    14       0     . º
º   7       0     .    15       0     . º
º   8       8     .    16       0     . º
ºENTER 13-16 FOR OVERLAPS A-D            º
ºEND OF SUBMENU                          º
ÈÍÍÍÍÍÍÍÍÍÍÍÍÍÍÍÍÍÍÍÍÍÍÍÍÍÍÍÍÍÍÍÍÍÍÍÍÍÍ¼

ÉÍÍÍÍÍÍÍÍÍÍÍÍÍÍÍÍÍÍÍÍÍÍÍÍÍÍÍÍÍÍÍÍÍÍÍÍÍÍ»
º          SDLC OPTIONS/ENABLES          º
º                                        º
º                 ----- BIU NUMBER ----- º
º                 1..2..3..4..5..6..7..8 º
ºTERM & FACIL...  X  .  .  .  .  .  .  . º
ºDETECTOR RACK..  X  .  .  .  .  .  .  . º
º                                        º
ºTYPE 2 RUNS AS TYPE 1................ X º
ºMMU DISABLE.......................... . º
ºDIAGNOSTIC ENABLE (TEST FIXTURE)..... . º
ºPEER TO PEER ENABLE.................. . º
º                                        º
ºPEER TO PEER ADDRESSES:                 º
º1) 255  2) 255  3) 255  4) 255   5) 255 º
º6) 255  7) 255  8) 255  9) 255  10) 255 º
ºEND OF SUBMENU                          º
ÈÍÍÍÍÍÍÍÍÍÍÍÍÍÍÍÍÍÍÍÍÍÍÍÍÍÍÍÍÍÍÍÍÍÍÍÍÍÍ¼

ÉÍÍÍÍÍÍÍÍÍÍÍÍÍÍÍÍÍÍÍÍÍÍÍÍÍÍÍÍÍÍÍÍÍÍÍÍÍÍ»
º         PORT2 CONFIGURATION            º
º                                        º
ºPORT2 PROTOCOL.................  TERMNL  º
ºPORT2 ENABLE..................     YES  º
º                                        º
ºAB3418 ADDRESS.................       0  º
ºAB3418 GROUP ADDRESS...........       0  º
ºAB3418 RESPONSE DELAY..........       0  º
ºAB3418 SINGLE FLAG ENABLE.....      NO  º
ºAB3418 DROP-OUT TIME..........       0  º
ºAB3418 TOD SF SELECT..........       0  º
º                                        º
ºDATA RATE (BPS)................   38.4k  º
ºDATA, PARITY, STOP............ 8, N, 1  º
º                                        º
ºEND OF SUBMENU                          º
ÈÍÍÍÍÍÍÍÍÍÍÍÍÍÍÍÍÍÍÍÍÍÍÍÍÍÍÍÍÍÍÍÍÍÍÍÍÍÍ¼

ÉÍÍÍÍÍÍÍÍÍÍÍÍÍÍÍÍÍÍÍÍÍÍÍÍÍÍÍÍÍÍÍÍÍÍÍÍÍÍ»
º         PORT3 CONFIGURATION            º
º                                        º
ºPORT3 PROTOCOL.................   TELEM  º
ºPORT3 ENABLE..................     YES  º
º                                        º
ºTELEMETRY ADDRESS.............       2  º
ºSYSTEM DETECTOR 9-16 ADDRESS..       0  º
ºTELEMETRY RESPONSE DELAY......    6000  º
º                                        º
ºAB3418 ADDRESS................       0  º
```

```
ºAB3418 GROUP ADDRESS.....        0  º
ºAB3418 RESPONSE DELAY.....       0  º
ºAB3418 SINGLE FLAG ENABLE.....  NO  º
ºAB3418 DROP-OUT TIME.....        0  º
ºAB3418 TOD SF SELECT.....        0  º
ºADDITIONAL SCREEN(S)                o
ÈÍÍÍÍÍÍÍÍÍÍÍÍÍÍÍÍÍÍÍÍÍÍÍÍÍÍÍÍÍÍÍÍÍÍÍÍÍÍ¼

ÉÍÍÍÍÍÍÍÍÍÍÍÍÍÍÍÍÍÍÍÍÍÍÍÍÍÍÍÍÍÍÍÍÍÍÍÍÍÍ»
º         PORT3 CONFIGURATION                 º
o                                             o
o                                             o
ºDUPLEX -- HALF or FULL.....    FULL  º
ºMODEM DATA RATE (BPS).....     1200  º
ºDATA, PARITY, STOP..... 8, O, 1      º
o                                             o
o                                             o
o                                             o
o                                             o
o                                             o
o                                             o
o                                             o
o                                             o
o                                             o
ºEND OF SUBMENU                               o
ÈÍÍÍÍÍÍÍÍÍÍÍÍÍÍÍÍÍÍÍÍÍÍÍÍÍÍÍÍÍÍÍÍÍÍÍÍÍÍ¼

ÉÍÍÍÍÍÍÍÍÍÍÍÍÍÍÍÍÍÍÍÍÍÍÍÍÍÍÍÍÍÍÍÍÍÍÍÍÍÍ»
º            ENABLE EVENT LOGS                º
o                                             o
ºCRITICAL RFE'S (MMU/TF) . . . . . .   X º
ºNON-CRITICAL RFE'S (DET/TEST) . . .   X º
ºDETECTOR ERRORS . . . . . .   X º
ºCOORDINATION ERRORS . . . . . .   X º
ºMMU FLASH FAULTS  . . . . . .   X º
ºLOCAL FLASH FAULTS  . . . . . .   X º
ºPREEMPT . . . . . .   X º
ºPOWER ON/OFF  . . . . . .   X º
ºLOW BATTERY . . . . . .   X º
ºSPARE . . . . . .   . º
ºALARM 1 . . . . . .   X º
ºALARM 2 . . . . . .   X º
ºALARM 3 . . . . . .   X º
ºADDITIONAL SCREEN(S)                         o
ÈÍÍÍÍÍÍÍÍÍÍÍÍÍÍÍÍÍÍÍÍÍÍÍÍÍÍÍÍÍÍÍÍÍÍÍÍÍÍ¼

ÉÍÍÍÍÍÍÍÍÍÍÍÍÍÍÍÍÍÍÍÍÍÍÍÍÍÍÍÍÍÍÍÍÍÍÍÍÍÍ»
º            ENABLE EVENT LOGS                º
o                                             o
ºALARM 4 . . . . . .   X º
ºALARM 5 . . . . . .   X º
ºALARM 6 . . . . . .   X º
ºALARM 7 . . . . . .   X º
ºALARM 8 . . . . . .   X º
ºALARM 9 . . . . . .   X º
ºALARM 10  . . . . . .   X º
ºALARM 11  . . . . . .   X º
ºALARM 12  . . . . . .   . º
ºALARM 13  . . . . . .   . º
ºALARM 14  . . . . . .   . º
ºALARM 15  . . . . . .   . º
ºALARM 16  . . . . . .   . º
ºEND OF SUBMENU                               o
```

```
ÈÍÍÍÍÍÍÍÍÍÍÍÍÍÍÍÍÍÍÍÍÍÍÍÍÍÍÍÍÍÍÍÍÍÍÍÍÍÍÍÍÍÍÍÍÍ¼

ÉÍÍÍÍÍÍÍÍÍÍÍÍÍÍÍÍÍÍÍÍÍÍÍÍÍÍÍÍÍÍÍÍÍÍÍÍÍÍÍÍÍÍÍÍÍ»
º                  OPTIONS                              º
º                                                       º
º                                                       º
º                                                       º
ºSUPERVISOR ACCESS CODE...... 0000                      º
º                                                       º
ºDATA CHANGE ACCESS CODE..... 0000                      º
º                                                       º
ºKEY CLICK ENABLE.............  YES                      º
º                                                       º
ºBACKLIGHT ENABLE.............  YES                      º
º                                                       º
º                                                       º
º                                                       º
º                                                       º
ºEND OF SUBMENU                                         º
ÈÍÍÍÍÍÍÍÍÍÍÍÍÍÍÍÍÍÍÍÍÍÍÍÍÍÍÍÍÍÍÍÍÍÍÍÍÍÍÍÍÍÍÍÍÍ¼

ÉÍÍÍÍÍÍÍÍÍÍÍÍÍÍÍÍÍÍÍÍÍÍÍÍÍÍÍÍÍÍÍÍÍÍÍÍÍÍÍÍÍÍÍÍÍ»
º                  MMU PROGRAM                          º
ºCAN SERVE WITH:                                        º
º             1 1 1 1 1 1 1                             º
ºCHANNEL      6 5 4 3 2 1 0 9 8 7 6 5 4 3 2º
º  1          . . . . . . . . X . . . X X Xº
º  2          . . . . . . . . . . X . . .  º
º  3          . . . . . . . . X . . . .    º
º  4          . . . . . . . . X . . .      º
º  5          . . . . . . . . . . . .      º
º  6          . . . . . . . . . . .        º
º  7          . . . . . . . . . .          º
º  8          . . . . . . . . .            º
º  9          . . . . . . . .              º
º 10          . . . . . . .                º
º 11          . . . . . .                  º
ºADDITIONAL SCREEN(S)                                   º
ÈÍÍÍÍÍÍÍÍÍÍÍÍÍÍÍÍÍÍÍÍÍÍÍÍÍÍÍÍÍÍÍÍÍÍÍÍÍÍÍÍÍÍÍÍÍ¼
♀
ÉÍÍÍÍÍÍÍÍÍÍÍÍÍÍÍÍÍÍÍÍÍÍÍÍÍÍÍÍÍÍÍÍÍÍÍÍÍÍÍÍÍÍÍÍÍ»
º                  MMU PROGRAM                          º
ºCAN SERVE WITH:                                        º
º             1 1 1 1 1 1 1                             º
ºCHANNEL      6 5 4 3 2 1 0 9 8 7 6 5 4 3 2º
º 12          . . . .                                   º
º 13          . . .                                     º
º 14          . .                                       º
º 15          .                                         º
º                                                       º
º                                                       º
º                                                       º
º                                                       º
º                                                       º
º                                                       º
º                                                       º
ºEND OF SUBMENU                                         º
ÈÍÍÍÍÍÍÍÍÍÍÍÍÍÍÍÍÍÍÍÍÍÍÍÍÍÍÍÍÍÍÍÍÍÍÍÍÍÍÍÍÍÍÍÍÍ¼
♀
ÉÍÍÍÍÍÍÍÍÍÍÍÍÍÍÍÍÍÍÍÍÍÍÍÍÍÍÍÍÍÍÍÍÍÍÍÍÍÍÍÍÍÍÍÍÍ»
º*************************************************º
º*   ECONOLITE CONTROL PRODUCTS, INC.            *º
º*              ASC/2-2000                       *º
```

```
º*          Copyright (C) 1992          *º
º*                                      *º
º* City of Ontario, Traffic Engineering *º
º*  ASC/2-2100  Configuration Ver. 1.1  *º
º*                                      *º
º*   SOFTWARE ASSY             VERSION  *º
º*   BOOT            32783        1.26  *º
º*   MAIN PROGRAM    32787        1.61  *º
º*                                      *º
º*                                      *º
º*                                      *º
º*                                      *º
º**************************************º
ÈÍÍÍÍÍÍÍÍÍÍÍÍÍÍÍÍÍÍÍÍÍÍÍÍÍÍÍÍÍÍÍÍÍÍÍÍÍÍ¼

ÉÍÍÍÍÍÍÍÍÍÍÍÍÍÍÍÍÍÍÍÍÍÍÍÍÍÍÍÍÍÍÍÍÍÍÍÍÍÍ»
º         CONTROLLER TIMING DATA             º
ºPHASE...   1...2...3...4...5...6...7...8º
ºMIN GRN.   0   7   7   7   0   0   0   7º
ºBIKE GRN   0   7   7   7   0   0   0   7º
ºCS MGRN.   0   0   7   0   0   0   0   0º
ºWALK....   0   7   0   0   0   0   0   0º
ºPED CLR.   0  28   0   7   0   7   0   7º
ºVEH EXT. 0.0 2.5 2.5 3.0 0.0 0.0 0.0 3.0º
ºVEH EXT2 0.0 2.0 2.5 3.0 0.0 0.0 0.0 3.0º
ºMAX EXT.   0   5   5  10   0   0   0  10º
ºMAX1....   0  20  20  35   0   0   0  35º
ºMAX2....   0  25  25  45   0   0   0  45º
ºMAX3....   0   0   0   0   0   0   0   0º
º                                         º
ºADDITIONAL SCREEN(S)              MORE->º
ÈÍÍÍÍÍÍÍÍÍÍÍÍÍÍÍÍÍÍÍÍÍÍÍÍÍÍÍÍÍÍÍÍÍÍÍÍÍÍ¼

ÉÍÍÍÍÍÍÍÍÍÍÍÍÍÍÍÍÍÍÍÍÍÍÍÍÍÍÍÍÍÍÍÍÍÍÍÍÍÍ»
º         CONTROLLER TIMING DATA             º
ºPHASE...   1...2...3...4...5...6...7...8º
ºYELLOW.. 3.0 4.0 5.0 5.0 3.0 3.0 3.0 5.0º
ºRED CLR. 0.0 2.0 2.0 2.0 0.0 0.0 0.0 2.0º
ºRED RVT. 0.0 5.0 5.0 5.0 0.0 0.0 0.0 5.0º
º                                         º
ºACT B4..   0   0   0   0   0   0   0   0º
ºSEC/ACT. 0.0 0.0 0.0 0.0 0.0 0.0 0.0 0.0º
ºMAX INI.   0   0   0   0   0   0   0   0º
ºTIME B4.   0   0   0  10   0   0   0  10º
ºCARS WT.   0   0   0   0   0   0   0   0º
ºTTREDUC.   0   0   0  15   0   0   0  15º
ºMIN GAP. 0.0 0.0 0.0 0.0 0.0 0.0 0.0 0.0º
º                                         º
º                                         º
ºEND OF SUBMENU                    MORE->º
ÈÍÍÍÍÍÍÍÍÍÍÍÍÍÍÍÍÍÍÍÍÍÍÍÍÍÍÍÍÍÍÍÍÍÍÍÍÍÍ¼

ÉÍÍÍÍÍÍÍÍÍÍÍÍÍÍÍÍÍÍÍÍÍÍÍÍÍÍÍÍÍÍÍÍÍÍÍÍÍÍ»
º         CONTROLLER TIMING DATA             º
ºPHASE...   9..10..11..12                     º
ºMIN GRN.   0   0   0   0                     º
ºBIKE GRN   0   0   0   0                     º
ºCS MGRN.   0   0   0   0                     º
ºWALK....   0   0   0   0                     º
ºPED CLR.   0   7   0   7                     º
ºVEH EXT. 0.0 0.0 0.0 0.0                     º
ºVEH EXT2 0.0 0.0 0.0 0.0                     º
```

```
ºMAX EXT.   0   0   0   0                 º
ºMAX1....   0   0   0   0                 º
ºMAX2....   0   0   0   0                 º
ºMAX3....   0   0   0   0                 º
ºDET MAX.   0   0   0   0                 º
º                                         º
ºADDITIONAL SCREEN(S)            <-MORE   º
ÈÍÍÍÍÍÍÍÍÍÍÍÍÍÍÍÍÍÍÍÍÍÍÍÍÍÍÍÍÍÍÍÍÍÍÍÍÍÍ¼

ÉÍÍÍÍÍÍÍÍÍÍÍÍÍÍÍÍÍÍÍÍÍÍÍÍÍÍÍÍÍÍÍÍÍÍÍÍÍÍ»
º          CONTROLLER TIMING DATA         º
ºPHASE...   9..10..11..12                 º
ºYELLOW.. 3.0 3.0 3.0 3.0                 º
ºRED CLR. 0.0 0.0 0.0 0.0                 º
ºRED RVT. 0.0 0.0 0.0 0.0                 º
º                                         º
ºACT B4..   0   0   0   0                 º
ºSEC/ACT. 0.0 0.0 0.0 0.0                 º
ºMAX INI.   0   0   0   0                 º
ºTIME B4.   0   0   0   0                 º
ºCARS WT.   0   0   0   0                 º
ºTTREDUC.   0   0   0   0                 º
ºMIN GAP. 0.0 0.0 0.0 0.0                 º
º                                         º
º                                         º
ºEND OF SUBMENU                  <-MORE   º
ÈÍÍÍÍÍÍÍÍÍÍÍÍÍÍÍÍÍÍÍÍÍÍÍÍÍÍÍÍÍÍÍÍÍÍÍÍÍÍ¼

ÉÍÍÍÍÍÍÍÍÍÍÍÍÍÍÍÍÍÍÍÍÍÍÍÍÍÍÍÍÍÍÍÍÍÍÍÍÍÍ»
º         PHASE OVERLAP ASSIGNMENTS       º
ºOVERLAP CONSISTS OF PHASES:        1 1 1º
ºOVLP PHASE       1 2 3 4 5 6 7 8 9 0 1 2º
º     1           X . . . . . . . . . . .º
º     2           . X . . . . . . . . . .º
º     3           . . X . . . . . . . . .º
º     4           . . . X . . . . . . . .º
º     5           . . . . X . . . . . . .º
º     6           . . . . . X . . . . . .º
º     7           . . . . . . X . . . . .º
º     8           . . . . . . . X . . . .º
º     9           . . . . . . . . X . . .º
º    10           . . . . . . . . . X . .º
º    11           . . . . . . . . . . X .º
º    12           . . . . . . . . . . . Xº
ºEND OF SUBMENU                           º
ÈÍÍÍÍÍÍÍÍÍÍÍÍÍÍÍÍÍÍÍÍÍÍÍÍÍÍÍÍÍÍÍÍÍÍÍÍÍÍ¼

ÉÍÍÍÍÍÍÍÍÍÍÍÍÍÍÍÍÍÍÍÍÍÍÍÍÍÍÍÍÍÍÍÍÍÍÍÍÍÍ»
º          PED TIMING CARRYOVER           º
º                                         º
º        PHASE      CARRYOVER PHASE       º
º          1              0               º
º          2              0               º
º          3              0               º
º          4              0               º
º          5              0               º
º          6              0               º
º          7              0               º
º          8              0               º
º          9              0               º
º         10              0               º
º         11              0               º
º         12              0               º
```

```
ºEND OF SUBMENU                                  º
ÈÍÍÍÍÍÍÍÍÍÍÍÍÍÍÍÍÍÍÍÍÍÍÍÍÍÍÍÍÍÍÍÍÍÍÍÍÍÍÍÍÍÍ¼

ÉÍÍÍÍÍÍÍÍÍÍÍÍÍÍÍÍÍÍÍÍÍÍÍÍÍÍÍÍÍÍÍÍÍÍÍÍÍÍÍÍÍÍ»
º         CONTROLLER RECALL DATA                 º
º                                                  º
ºPHASE:                                  1 1 1º
ºPHASE.....  1 2 3 4 5 6 7 8 9 0 1 2º
ºLOCKING MEMORY.  . . . . . . . . . . . .º
ºVEHICLE RECALL.  . . . X . . . X . . . .º
ºPED RECALL.....  . . . . . . . . . . . .º
ºRECALL TO MAX..  . . . . . . . . . . . .º
ºSOFT RECALL....  . . . . . . . . . . . .º
ºDON'T REST HERE  . . . . . . . . . . . .º
ºPED DARK N/CALL  . . . . . . . . . . . .º
º                                                  º
º                                                  º
º                                                  º
º                                                  º
ºEND OF SUBMENU                                  º
ÈÍÍÍÍÍÍÍÍÍÍÍÍÍÍÍÍÍÍÍÍÍÍÍÍÍÍÍÍÍÍÍÍÍÍÍÍÍÍÍÍÍÍ¼

ÉÍÍÍÍÍÍÍÍÍÍÍÍÍÍÍÍÍÍÍÍÍÍÍÍÍÍÍÍÍÍÍÍÍÍÍÍÍÍÍÍÍÍ»
º         CONTROLLER OVERLAP DATA                º
º                                                  º
º                                        1 1 1º
ºOVERLAP A.....   1 2 3 4 5 6 7 8 9 0 1 2º
ºSTANDARD......   . . . . . . . . . . . .º
ºPROTECTED.....   . . . . . . . . . . . .º
ºPERMITTED.....   . . . . . . . . . . . .º
ºENABLE LAG....   . . . . . . . . . . . .º
ºENABLE LEAD...   . . . . . . . . . . . .º
ºSPARE.........   . . . . . . . . . . . .º
º                                                  º
º     ADVANCE GREEN TIMER      0.0         º
º     LAG/LEAD GREEN TIMER     0.0         º
º     LAG/LEAD YELLOW TIMER    0.0         º
º     LAG/LEAD RED TIMER       0.0         º
ºADDITIONAL PAGE(S)                              º
ÈÍÍÍÍÍÍÍÍÍÍÍÍÍÍÍÍÍÍÍÍÍÍÍÍÍÍÍÍÍÍÍÍÍÍÍÍÍÍÍÍÍÍ¼

ÉÍÍÍÍÍÍÍÍÍÍÍÍÍÍÍÍÍÍÍÍÍÍÍÍÍÍÍÍÍÍÍÍÍÍÍÍÍÍÍÍÍÍ»
º         CONTROLLER OVERLAP DATA                º
º                                                  º
º                                        1 1 1º
ºOVERLAP B.....   1 2 3 4 5 6 7 8 9 0 1 2º
ºSTANDARD......   . . . . . . . . . . . .º
ºPROTECTED.....   . . . . . . . . . . . .º
ºPERMITTED.....   . . . . . . . . . . . .º
ºENABLE LAG....   . . . . . . . . . . . .º
ºENABLE LEAD...   . . . . . . . . . . . .º
ºSPARE.........   . . . . . . . . . . . .º
º                                                  º
º     ADVANCE GREEN TIMER      0.0         º
º     LAG/LEAD GREEN TIMER     0.0         º
º     LAG/LEAD YELLOW TIMER    0.0         º
º     LAG/LEAD RED TIMER       0.0         º
ºADDITIONAL PAGE(S)                              º
ÈÍÍÍÍÍÍÍÍÍÍÍÍÍÍÍÍÍÍÍÍÍÍÍÍÍÍÍÍÍÍÍÍÍÍÍÍÍÍÍÍÍÍ¼

ÉÍÍÍÍÍÍÍÍÍÍÍÍÍÍÍÍÍÍÍÍÍÍÍÍÍÍÍÍÍÍÍÍÍÍÍÍÍÍÍÍÍÍ»
º         CONTROLLER OVERLAP DATA                º
º                                                  º
```

```
º                                    1 1 1º
ºOVERLAP C.....   1 2 3 4 5 6 7 8 9 0 1 2º
ºSTANDARD......   . . . . . . . . . . . .º
ºPROTECTED.....   . . . . . . . . . . . .º
ºPERMITTED.....   . . . . . . . . . . . .º
ºENABLE LAG....   . . . . . . . . . . . .º
ºENABLE LEAD...   . . . . . . . . . . . .º
ºSPARE.........   . . . . . . . . . . . .º
º                                         º
º     ADVANCE GREEN TIMER      0.0        º
º     LAG/LEAD GREEN TIMER     0.0        º
º     LAG/LEAD YELLOW TIMER    0.0        º
º     LAG/LEAD RED TIMER       0.0        º
ºADDITIONAL PAGE(S)                       º
ÈÍÍÍÍÍÍÍÍÍÍÍÍÍÍÍÍÍÍÍÍÍÍÍÍÍÍÍÍÍÍÍÍÍÍÍÍÍÍÍÍÍ¼

ÉÍÍÍÍÍÍÍÍÍÍÍÍÍÍÍÍÍÍÍÍÍÍÍÍÍÍÍÍÍÍÍÍÍÍÍÍÍÍÍÍÍ»
º         CONTROLLER OVERLAP DATA         º
º                                         º
º                                    1 1 1º
ºOVERLAP D.....   1 2 3 4 5 6 7 8 9 0 1 2º
ºSTANDARD......   . . X . . . . . . . . .º
ºPROTECTED.....   . . . . . . . . . . . .º
ºPERMITTED.....   . . . . . . . . . . . .º
ºENABLE LAG....   . . . . . . . . . . . .º
ºENABLE LEAD...   . . . . . . . . . . . .º
ºSPARE.........   . . . . . . . . . . . .º
º                                         º
º     ADVANCE GREEN TIMER      0.0        º
º     LAG/LEAD GREEN TIMER     0.0        º
º     LAG/LEAD YELLOW TIMER    0.0        º
º     LAG/LEAD RED TIMER       0.0        º
ºADDITIONAL PAGE(S)                       º
ÈÍÍÍÍÍÍÍÍÍÍÍÍÍÍÍÍÍÍÍÍÍÍÍÍÍÍÍÍÍÍÍÍÍÍÍÍÍÍÍÍÍ¼

♀

ÉÍÍÍÍÍÍÍÍÍÍÍÍÍÍÍÍÍÍÍÍÍÍÍÍÍÍÍÍÍÍÍÍÍÍÍÍÍÍÍÍÍ»
º        PED OVERLAP ASSIGNMENTS          º
ºOVERLAP CONSISTS OF PHASES:         1 1 1º
ºOVLP PHASE       1 2 3 4 5 6 7 8 9 0 1 2º
º     1           . . . . . . . . . . . .º
º     2           . . . . . . . . . . . .º
º     3           . . . . . . . . . . . .º
º     4           . . . . . . . . . . . .º
º     5           . . . . . . . . . . . .º
º     6           . . . . . . . . . . . .º
º     7           . . . . . . . . . . . .º
º     8           . . . . . . . . . . . .º
º     9           . . . . . . . . . . . .º
º    10           . . . . . . . . . . . .º
º    11           . . . . . . . . . . . .º
º    12           . . . . . . . . . . . .º
ºEND OF SUBMENU                           º
ÈÍÍÍÍÍÍÍÍÍÍÍÍÍÍÍÍÍÍÍÍÍÍÍÍÍÍÍÍÍÍÍÍÍÍÍÍÍÍÍÍÍ¼

ÉÍÍÍÍÍÍÍÍÍÍÍÍÍÍÍÍÍÍÍÍÍÍÍÍÍÍÍÍÍÍÍÍÍÍÍÍÍÍÍÍÍ»
º       CONTROLLER START/FLASH DATA       º
º                                    1 1 1º
ºPHASE.........   1 2 3 4 5 6 7 8 9 0 1 2º
ºPOWER START....  . X . . . . . . . . . .º
ºEXTERNAL START.  . X . . . . . . . . . .º
ºENTRY REM FLASH  . . . X . . . X . . . .º
ºEXIT REM FLASH.  . X . . . . . . . . . .º
ºREM FLASH YEL..  . . . . . . . . . . . .º
```

```
ºFL TOGETHER PHS  . X . X . . . X . . . .º
ºFL TOGETHER OVLPS A: .  B: .  C: .  D: .º
º                                         º
ºPOWER START..............   YELLOW     º
ºEXTERNAL START...........   YELLOW     º
ºPOWER START ALL RED TIME..  0 SECONDS  º
ºPOWER START FLASH TIME....  0 SECONDS  º
ºADDITIONAL PAGE(S)                       º
ÈÍÍÍÍÍÍÍÍÍÍÍÍÍÍÍÍÍÍÍÍÍÍÍÍÍÍÍÍÍÍÍÍÍÍÍÍÍÍÍÍÍ¼

ÉÍÍÍÍÍÍÍÍÍÍÍÍÍÍÍÍÍÍÍÍÍÍÍÍÍÍÍÍÍÍÍÍÍÍÍÍÍÍÍÍÍ»
º       CONTROLLER START/FLASH DATA       º
º                                         º
ºREMOTE FLASH OPTIONS:                    º
º                                         º
ºOUT OF FLASH YELLOW..... X               º
ºOUT OF FLASH ALL RED..... .              º
ºMINIMUM RECALL.......... .               º
ºSPARE................... .               º
ºFLASH THRU LOAD SWITCHES.... .           º
ºCYCLE THROUGH PHASES..... .              º
º                                         º
º                                         º
º                                         º
º                                         º
º                                         º
ºEND OF SUBMENU                           º
ÈÍÍÍÍÍÍÍÍÍÍÍÍÍÍÍÍÍÍÍÍÍÍÍÍÍÍÍÍÍÍÍÍÍÍÍÍÍÍÍÍÍ¼

ÉÍÍÍÍÍÍÍÍÍÍÍÍÍÍÍÍÍÍÍÍÍÍÍÍÍÍÍÍÍÍÍÍÍÍÍÍÍÍÍÍÍ»
º            NO SERVE PHASES              º
ºCANNOT SERVE WITH: 1 1 1                 º
ºPHASE              2 1 0 9 8 7 6 5 4 3 2º
º  1                . . . . . . . . . . .º
º  2                . . . . . . . . . .  º
º  3                . . . . . . . . .    º
º  4                . . . . . . . .      º
º  5                . . . . . . .        º
º  6                . . . . . .          º
º  7                . . . . .            º
º  8                . . . .              º
º  9                . . .                º
º 10                . .                  º
º 11                .                    º
º                                         º
ºEND OF SUBMENU                           º
ÈÍÍÍÍÍÍÍÍÍÍÍÍÍÍÍÍÍÍÍÍÍÍÍÍÍÍÍÍÍÍÍÍÍÍÍÍÍÍÍÍÍ¼

ÉÍÍÍÍÍÍÍÍÍÍÍÍÍÍÍÍÍÍÍÍÍÍÍÍÍÍÍÍÍÍÍÍÍÍÍÍÍÍÍÍÍ»
º                 DIMMING                 º
º                                         º
ºLOAD SWITCH....  1..2..3..4..5..6..7..8 º
ºDIM GRN/WLK....  .  .  .  .  .  .  .  . º
ºDIM YEL/PC.....  .  .  .  .  .  .  .  . º
ºDIM RED/DW.....  .  .  .  .  .  .  .  . º
º                                         º
ºLOAD SWITCH....  9.10.11.12.13.14.15.16 º
ºDIM GRN/WLK....  .  .  .  .  .  .  .  . º
ºDIM YEL/PC.....  .  .  .  .  .  .  .  . º
ºDIM RED/DW.....  .  .  .  .  .  .  .  . º
º                                         º
º                                         º
º                                         º
```

```
º                                                                    º
ºEND OF SUBMENU                                                      º
ÈÍÍÍÍÍÍÍÍÍÍÍÍÍÍÍÍÍÍÍÍÍÍÍÍÍÍÍÍÍÍÍÍÍÍÍÍÍÍÍÍÍÍÍÍÍÍÍÍÍÍÍÍÍÍÍÍÍÍ¼

ÉÍÍÍÍÍÍÍÍÍÍÍÍÍÍÍÍÍÍÍÍÍÍÍÍÍÍÍÍÍÍÍÍÍÍÍÍÍÍÍÍÍÍÍÍÍÍÍÍÍÍÍÍÍÍÍÍÍÍ»
º         CONTROLLER OPTION DATA                                     º
º                                                        1 1 1       º
ºPHASE.....  1 2 3 4 5 6 7 8 9 0 1 2                                  º
ºGUAR PASSAGE...  . . . . . . . . . . . .                            º
ºNONACTUATED I..  . . . X . . . X . . . .                            º
ºNONACTUATED II.  . X . . . . . . . . . .                            º
ºDUAL ENTRY.....  . . . . . . . . . . . .                            º
ºCOND SERVICE...  . . . . . . . . . . . .                            º
ºCOND RESERVICE.  . . . . . . . . . . . .                            º
ºREST IN WALK...  . . . . . . . . . . . .                            º
ºFLASHING WALK..  . . . . . . . . . . . .                            º
º                                                                    º
º----- FIVE SECTION LEFT TURN HEADS -----                           º
º   5-2 :  .     7-4 :  .     1-6 :  .                              º
º   3-8 :  .    11-10:  .    9-12 :  .                              º
ºADDITIONAL PAGE(S)                                                  º
ÈÍÍÍÍÍÍÍÍÍÍÍÍÍÍÍÍÍÍÍÍÍÍÍÍÍÍÍÍÍÍÍÍÍÍÍÍÍÍÍÍÍÍÍÍÍÍÍÍÍÍÍÍÍÍÍÍÍÍ¼
♀
ÉÍÍÍÍÍÍÍÍÍÍÍÍÍÍÍÍÍÍÍÍÍÍÍÍÍÍÍÍÍÍÍÍÍÍÍÍÍÍÍÍÍÍÍÍÍÍÍÍÍÍÍÍÍÍÍÍÍÍ»
º         CONTROLLER OPTION DATA                                     º
ºDUAL ENTRY..................... OFF                                 º
ºCOND SERVICE ENABLE............ OFF                                 º
ºCOND SERVICE DET X SWITCHING.... OFF                                º
ºPED CLR PROTECT................ OFF                                 º
ºSPEC PREEMPT OVLP FLASH........ OFF                                 º
ºLOCK DETECTORS IN RED ONLY..... OFF                                 º
ºRESERVED....................... OFF                                 º
ºRESERVED....................... OFF                                 º
ºBACKUP PROTECTION GROUP 1...... OFF                                 º
ºBACKUP PROTECTION GROUP 2...... OFF                                 º
ºBACKUP PROTECTION GROUP 3...... OFF                                 º
ºSIMULTANEOUS GAP GROUP 1....... OFF                                 º
ºSIMULTANEOUS GAP GROUP 2....... OFF                                 º
ºSIMULTANEOUS GAP GROUP 3....... OFF                                 º
ºEND OF SUBMENU                                                      º
ÈÍÍÍÍÍÍÍÍÍÍÍÍÍÍÍÍÍÍÍÍÍÍÍÍÍÍÍÍÍÍÍÍÍÍÍÍÍÍÍÍÍÍÍÍÍÍÍÍÍÍÍÍÍÍÍÍÍÍ¼
♀
ÉÍÍÍÍÍÍÍÍÍÍÍÍÍÍÍÍÍÍÍÍÍÍÍÍÍÍÍÍÍÍÍÍÍÍÍÍÍÍÍÍÍÍÍÍÍÍÍÍÍÍÍÍÍÍÍÍÍÍ»
º*****************************************º
º*   ECONOLITE CONTROL PRODUCTS, INC.    *º
º*            ASC/2-2000                 *º
º*          Copyright (C) 1992           *º
º*                                       *º
º* City of Ontario, Traffic Engineering *º
º*  ASC/2-2100  Configuration Ver. 1.1   *º
º*                                       *º
º*   SOFTWARE ASSY             VERSION   *º
º*   BOOT            32783        1.26   *º
º*   MAIN PROGRAM    32787        1.61   *º
º*                                       *º
º*                                       *º
º*                                       *º
º*                                       *º
º*****************************************º
ÈÍÍÍÍÍÍÍÍÍÍÍÍÍÍÍÍÍÍÍÍÍÍÍÍÍÍÍÍÍÍÍÍÍÍÍÍÍÍÍÍÍÍÍÍÍÍÍÍÍÍÍÍÍÍÍÍÍÍ¼

ÉÍÍÍÍÍÍÍÍÍÍÍÍÍÍÍÍÍÍÍÍÍÍÍÍÍÍÍÍÍÍÍÍÍÍÍÍÍÍÍÍÍÍÍÍÍÍÍÍÍÍÍÍÍÍÍÍÍÍ»
º          COORDINATOR OPTIONS                                       º
```

```
º                                                  º
ºSPLIT UNITS..    %    ACT CRD PHASE..  Xº
ºOFFSET UNITS.    %    ACT WALK/REST..  .º
ºINTERCNT FMT.  STD    INHIBIT MAX....  Xº
ºINTERCNT SRC.  NIC    MAX2 SELECT....  .º
ºRESYNC COUNT.    0    MULTISYNC......  .º
ºTRANSITION...  SMOOTH FLOAT FORCE OFF  .º
ºDWELL PERIOD.    0%                     º
º                                        º
º                                        º
º                            A B C D E F º
ºFREE ALTERNATE SEQUENCE     . . . . . . º
º                                        º
º                                        º
ºEND OF SUBMENU                          º
ÈÍÍÍÍÍÍÍÍÍÍÍÍÍÍÍÍÍÍÍÍÍÍÍÍÍÍÍÍÍÍÍÍÍÍÍÍÍÍÍÍÍÍ¼

ÉÍÍÍÍÍÍÍÍÍÍÍÍÍÍÍÍÍÍÍÍÍÍÍÍÍÍÍÍÍÍÍÍÍÍÍÍÍÍÍÍÍÍ»
º      COORD MANUAL AND SPLIT DEMAND     º
º                                        º
ºMANUAL ENABLE:  ON    MANUAL PATTERN   0º
º                                        º
º----------------------------------------º
º                                        º
ºSPLIT DEMAND:        DEMAND 1  DEMAND 2 º
ºDEMAND CALL TIME        0s        0s    º
ºDEMAND CYCLE COUNT      0         0     º
º                                        º
º                                  1 1 1º
ºDEMAND PHASE:    1 2 3 4 5 6 7 8 9 0 1 2º
ºDEMAND 1 PHASES  . . . . . . . . . . . .º
ºDEMAND 2 PHASES  . . . . . . . . . . . .º
º                                        º
ºEND OF SUBMENU                          º
ÈÍÍÍÍÍÍÍÍÍÍÍÍÍÍÍÍÍÍÍÍÍÍÍÍÍÍÍÍÍÍÍÍÍÍÍÍÍÍÍÍÍÍ¼

ÉÍÍÍÍÍÍÍÍÍÍÍÍÍÍÍÍÍÍÍÍÍÍÍÍÍÍÍÍÍÍÍÍÍÍÍÍÍÍÍÍÍÍ»
º        COORD AUTO PERM MIN GREEN       º
º                                        º
º        PHASE   AUTO PERM MIN GRN       º
º          1              0s             º
º          2              0s             º
º          3              0s             º
º          4              0s             º
º          5              0s             º
º          6              0s             º
º          7              0s             º
º          8              0s             º
º          9              0s             º
º         10              0s             º
º         11              0s             º
º         12              0s             º
ºEND OF SUBMENU                          º
ÈÍÍÍÍÍÍÍÍÍÍÍÍÍÍÍÍÍÍÍÍÍÍÍÍÍÍÍÍÍÍÍÍÍÍÍÍÍÍÍÍÍÍ¼

ÉÍÍÍÍÍÍÍÍÍÍÍÍÍÍÍÍÍÍÍÍÍÍÍÍÍÍÍÍÍÍÍÍÍÍÍÍÍÍÍÍÍÍ»
ºCOORD PATTERN 31                        º
º                                        º
ºCYCLE LENGTH..... 100s  C/O/S.....  411 º
ºOFFSET.....  27%                        º
ºSPLITS:                                 º
ºPHASE  1)  0%   2) 31%   3) 23%   4) 46%º
ºPHASE  5)  0%   6)  0%   7)  0%   8) 69%º
```

```
ºPHASE  9)  0%  10)  0%  11)  0%  12)  0%º
º                                         º
ºVEH PERMISSIVE.......  [1]   0% [2]   0%º
ºVEH PERM 2 DISP.....   0%                º
ºPHASE RESERVICE.....   .                 º
ºSPLIT EXTENSION/RING.  [1]   0% [2]   0%º
ºSPL DMD PATTERN......  [1]   0  [2]   0 º
ºXARTERY PATTERN.....   0                 º
ºADDITIONAL SCREEN(S)                     º
ÈÍÍÍÍÍÍÍÍÍÍÍÍÍÍÍÍÍÍÍÍÍÍÍÍÍÍÍÍÍÍÍÍÍÍÍÍÍÍ¼

ÉÍÍÍÍÍÍÍÍÍÍÍÍÍÍÍÍÍÍÍÍÍÍÍÍÍÍÍÍÍÍÍÍÍÍÍÍÍÍ»
º                                 1 1 1º
ºPHASE            1 2 3 4 5 6 7 8 9 0 1 2º
ºCOORD PHASES     . . . X . . . X . . . .º
ºVEHICLE RECALL   . . . . . . . . . . . .º
ºVEH MAX RECALL   . . . . . . . . . . . .º
ºPED RECALL       . . . . . . . . . . . .º
ºPHASE OMIT       . . . . . . . . . . . .º
ºSPARE            . . . . . . . . . . . .º
º                                         º
º                 A B C D E F             º
ºALT SEQUENCE:    . . . . . .             º
º                                         º
º                                         º
º                                         º
º                                         º
ºADDITIONAL SCREEN(S)                     º
ÈÍÍÍÍÍÍÍÍÍÍÍÍÍÍÍÍÍÍÍÍÍÍÍÍÍÍÍÍÍÍÍÍÍÍÍÍÍÍ¼

ÉÍÍÍÍÍÍÍÍÍÍÍÍÍÍÍÍÍÍÍÍÍÍÍÍÍÍÍÍÍÍÍÍÍÍÍÍÍÍ»
ºCOORD PATTERN 33                         º
º                                         º
ºCYCLE LENGTH..... 100s  C/O/S.....  611 º
ºOFFSET.....  34%                         º
ºSPLITS:                                  º
ºPHASE  1)  0%   2) 29%   3) 25%   4) 46%º
ºPHASE  5)  0%   6)  0%   7)  0%   8) 71%º
ºPHASE  9)  0%  10)  0%  11)  0%  12)  0%º
º                                         º
ºVEH PERMISSIVE.......  [1]   0% [2]   0%º
ºVEH PERM 2 DISP.....   0%                º
ºPHASE RESERVICE.....   .                 º
ºSPLIT EXTENSION/RING.  [1]   0% [2]   0%º
ºSPL DMD PATTERN......  [1]   0  [2]   0 º
ºXARTERY PATTERN.....   0                 º
ºADDITIONAL SCREEN(S)                     º
ÈÍÍÍÍÍÍÍÍÍÍÍÍÍÍÍÍÍÍÍÍÍÍÍÍÍÍÍÍÍÍÍÍÍÍÍÍÍÍ¼

ÉÍÍÍÍÍÍÍÍÍÍÍÍÍÍÍÍÍÍÍÍÍÍÍÍÍÍÍÍÍÍÍÍÍÍÍÍÍÍ»
º                                 1 1 1º
ºPHASE            1 2 3 4 5 6 7 8 9 0 1 2º
ºCOORD PHASES     . . . X . . . X . . . .º
ºVEHICLE RECALL   . . . . . . . . . . . .º
ºVEH MAX RECALL   . . . . . . . . . . . .º
ºPED RECALL       . . . . . . . . . . . .º
ºPHASE OMIT       . . . . . . . . . . . .º
ºSPARE            . . . . . . . . . . . .º
º                                         º
º                 A B C D E F             º
ºALT SEQUENCE:    . . . . . .             º
º                                         º
º                                         º
```

```
º                                                    º
º                                                    º
ºADDITIONAL SCREEN(S)                                º
ÈÍÍÍÍÍÍÍÍÍÍÍÍÍÍÍÍÍÍÍÍÍÍÍÍÍÍÍÍÍÍÍÍÍÍÍÍÍÍÍÍÍÍÍÍ¼

ÉÍÍÍÍÍÍÍÍÍÍÍÍÍÍÍÍÍÍÍÍÍÍÍÍÍÍÍÍÍÍÍÍÍÍÍÍÍÍÍÍÍÍÍÍ»
ºCOORD PATTERN 51                                    º
º                                                    º
ºCYCLE LENGTH..... 100s  C/O/S.....  411 º
ºOFFSET...........  27%                              º
ºSPLITS:                                             º
ºPHASE  1)  0%   2) 31%   3) 23%   4) 46%º
ºPHASE  5)  0%   6)  0%   7)  0%   8) 69%º
ºPHASE  9)  0%  10)  0%  11)  0%  12)  0%º
º                                                    º
ºVEH PERMISSIVE.......  [1]   0% [2]   0%º
ºVEH PERM 2 DISP...........   0%                     º
ºPHASE RESERVICE...........   .                      º
ºSPLIT EXTENSION/RING.  [1]   0% [2]   0%º
ºSPL DMD PATTERN......  [1]   0  [2]   0 º
ºXARTERY PATTERN...........   0                      º
ºADDITIONAL SCREEN(S)                                º
ÈÍÍÍÍÍÍÍÍÍÍÍÍÍÍÍÍÍÍÍÍÍÍÍÍÍÍÍÍÍÍÍÍÍÍÍÍÍÍÍÍÍÍÍÍ¼

ÉÍÍÍÍÍÍÍÍÍÍÍÍÍÍÍÍÍÍÍÍÍÍÍÍÍÍÍÍÍÍÍÍÍÍÍÍÍÍÍÍÍÍÍÍ»
º                                      1 1 1º
ºPHASE            1 2 3 4 5 6 7 8 9 0 1 2º
ºCOORD PHASES     . . . X . . . X . . . .º
ºVEHICLE RECALL   . . . . . . . . . . . .º
ºVEH MAX RECALL   . . . . . . . . . . . .º
ºPED RECALL       . . . . . . . . . . . .º
ºPHASE OMIT       . . . . . . . . . . . .º
ºSPARE            . . . . . . . . . . . .º
º                                                    º
º                 A B C D E F                        º
ºALT SEQUENCE:    . . . . . .                        º
º                                                    º
º                                                    º
º                                                    º
º                                                    º
ºADDITIONAL SCREEN(S)                                º
ÈÍÍÍÍÍÍÍÍÍÍÍÍÍÍÍÍÍÍÍÍÍÍÍÍÍÍÍÍÍÍÍÍÍÍÍÍÍÍÍÍÍÍÍÍ¼

ÉÍÍÍÍÍÍÍÍÍÍÍÍÍÍÍÍÍÍÍÍÍÍÍÍÍÍÍÍÍÍÍÍÍÍÍÍÍÍÍÍÍÍÍÍ»
ºCOORD PATTERN 53                                    º
º                                                    º
ºCYCLE LENGTH..... 100s  C/O/S.....  611 º
ºOFFSET...........  38%                              º
ºSPLITS:                                             º
ºPHASE  1)  0%   2) 29%   3) 25%   4) 46%º
ºPHASE  5)  0%   6)  0%   7)  0%   8) 71%º
ºPHASE  9)  0%  10)  0%  11)  0%  12)  0%º
º                                                    º
ºVEH PERMISSIVE.......  [1]   0% [2]   0%º
ºVEH PERM 2 DISP...........   0%                     º
ºPHASE RESERVICE...........   .                      º
ºSPLIT EXTENSION/RING.  [1]   0% [2]   0%º
ºSPL DMD PATTERN......  [1]   0  [2]   0 º
ºXARTERY PATTERN...........   0                      º
ºADDITIONAL SCREEN(S)                                º
ÈÍÍÍÍÍÍÍÍÍÍÍÍÍÍÍÍÍÍÍÍÍÍÍÍÍÍÍÍÍÍÍÍÍÍÍÍÍÍÍÍÍÍÍÍ¼

ÉÍÍÍÍÍÍÍÍÍÍÍÍÍÍÍÍÍÍÍÍÍÍÍÍÍÍÍÍÍÍÍÍÍÍÍÍÍÍÍÍÍÍÍÍ»
```

```
º                                    1 1 1º
ºPHASE            1 2 3 4 5 6 7 8 9 0 1 2º
ºCOORD PHASES     . . . X . . . X . . . .º
ºVEHICLE RECALL   . . . . . . . . . . . .º
ºVEH MAX RECALL   . . . . . . . . . . . .º
ºPED RECALL       . . . . . . . . . . . .º
ºPHASE OMIT       . . . . . . . . . . . .º
ºSPARE            . . . . . . . . . . . .º
º                                        º
º                 A B C D E F            º
ºALT SEQUENCE:    . . . . . .            º
º                                        º
º                                        º
º                                        º
º                                        º
ºADDITIONAL SCREEN(S)                    º
ÈÍÍÍÍÍÍÍÍÍÍÍÍÍÍÍÍÍÍÍÍÍÍÍÍÍÍÍÍÍÍÍÍÍÍÍÍÍÍÍÍÍ¼

ÉÍÍÍÍÍÍÍÍÍÍÍÍÍÍÍÍÍÍÍÍÍÍÍÍÍÍÍÍÍÍÍÍÍÍÍÍÍÍÍÍÍ»
º****************************************º
º*   ECONOLITE CONTROL PRODUCTS, INC.   *º
º*            ASC/2-2000                *º
º*          Copyright (C) 1992          *º
º*                                      *º
º* City of Ontario, Traffic Engineering *º
º*  ASC/2-2100  Configuration Ver. 1.1  *º
º*                                      *º
º*   SOFTWARE ASSY             VERSION  *º
º*   BOOT            32783        1.26  *º
º*   MAIN PROGRAM    32787        1.61  *º
º*                                      *º
º*                                      *º
º*                                      *º
º*                                      *º
º****************************************º
ÈÍÍÍÍÍÍÍÍÍÍÍÍÍÍÍÍÍÍÍÍÍÍÍÍÍÍÍÍÍÍÍÍÍÍÍÍÍÍÍÍÍ¼

ÉÍÍÍÍÍÍÍÍÍÍÍÍÍÍÍÍÍÍÍÍÍÍÍÍÍÍÍÍÍÍÍÍÍÍÍÍÍÍÍÍÍ»
ºPRIORITY PREEMPTOR 1                1 1 1º
ºPHASE.........  1 2 3 4 5 6 7 8 9 0 1 2º
ºTERM PHASE OVLP  . . . . . . . . . . . .º
ºTRK CLR PHASE..  . . . . . . . . . . . .º
ºHOLD PHASES....  . . . . . . . . . . . .º
ºEXIT PHASES....  . . . . . . . . . . . .º
ºEXIT CALLS.....  . . . . . . . . . . . .º
ºSPARE.........  . . . . . . . . . . . .º
ºTERM OVERLAP...   A: .  B: .  C: .  D: .º
º                                        º
ºACTIVE......... NO  PED DARK....... NO  º
ºPRIORITY....... NO  PED ACTIVE..... NO  º
ºDET LOCK....... NO  ZERO PC TIME... NO  º
ºHOLD FLASH..... NO  PC THRU YELLOW. NO  º
ºTERM OVLP ASAP. NO  TERM PHASES.... NO  º
ºADDITIONAL PAGE(S)                      º
ÈÍÍÍÍÍÍÍÍÍÍÍÍÍÍÍÍÍÍÍÍÍÍÍÍÍÍÍÍÍÍÍÍÍÍÍÍÍÍÍÍÍ¼

ÉÍÍÍÍÍÍÍÍÍÍÍÍÍÍÍÍÍÍÍÍÍÍÍÍÍÍÍÍÍÍÍÍÍÍÍÍÍÍÍÍÍ»
º          PRIORITY PREEMPTOR 1          º
º                                        º
ºDON'T OVERRIDE FLASH.....  .            º
ºFLASH ALL OUTPUTS........  .            º
ºYELLOW-RED GOES GREEN....  .            º
ºENABLE MAX PREEMPT TIME..  .            º
```

```
ºACTIVE ONLY DURING HOLD..  .            º
ºNO CVM IN FLASH..........  .            º
ºFAST FLASH GRN ON HOLD...  .            º
ºOUT OF FLASH.............  GREEN        º
º                                        º
º                                        º
º                                        º
º                                        º
º                                        º
ºADDITIONAL PAGE(S)                      º
ÈÍÍÍÍÍÍÍÍÍÍÍÍÍÍÍÍÍÍÍÍÍÍÍÍÍÍÍÍÍÍÍÍÍÍÍÍÍÍ¼

ÉÍÍÍÍÍÍÍÍÍÍÍÍÍÍÍÍÍÍÍÍÍÍÍÍÍÍÍÍÍÍÍÍÍÍÍÍÍÍ»
º          PRIORITY PREEMPTOR 1          º
º                                        º
ºMAX TIME......  0  DURATION TIME..  0    º
ºMIN HOLD TIME.  0  DELAY TIME.....  0    º
ºMIN PED CLEAR.  0  INHIBIT TIME...  0    º
ºEXIT MAX......  0  HLD DELAY TIME.  0    º
º                                        º
º                GRN  YEL  RED           º
ºMINIMUM.......    0  0.0  0.0           º
ºTRACK CLEAR...    0  0.0  0.0           º
ºHOLD..........       0.0  0.0           º
º                                        º
º                                        º
º                                        º
º                                        º
ºEND OF SUBMENU                          º
ÈÍÍÍÍÍÍÍÍÍÍÍÍÍÍÍÍÍÍÍÍÍÍÍÍÍÍÍÍÍÍÍÍÍÍÍÍÍÍ¼

ÉÍÍÍÍÍÍÍÍÍÍÍÍÍÍÍÍÍÍÍÍÍÍÍÍÍÍÍÍÍÍÍÍÍÍÍÍÍÍ»
ºPRIORITY PREEMPTOR 2              1 1 1º
ºPHASE.........  1 2 3 4 5 6 7 8 9 0 1 2º
ºTERM PHASE OVLP  . . . . . . . . . . . .º
ºTRK CLR PHASE..  . . . . . . . . . . . .º
ºHOLD PHASES....  . . . . . . . . . . . .º
ºEXIT PHASES....  . . . . . . . . . . . .º
ºEXIT CALLS.....  . . . . . . . . . . . .º
ºSPARE..........  . . . . . . . . . . . .º
ºTERM OVERLAP...   A: .  B: .  C: .  D: .º
º                                        º
ºACTIVE......... NO  PED DARK....... NO  º
ºPRIORITY....... NO  PED ACTIVE..... NO  º
ºDET LOCK....... NO  ZERO PC TIME... NO  º
ºHOLD FLASH..... NO  PC THRU YELLOW. NO  º
ºTERM OVLP ASAP. NO  TERM PHASES.... NO  º
ºADDITIONAL PAGE(S)                      º
ÈÍÍÍÍÍÍÍÍÍÍÍÍÍÍÍÍÍÍÍÍÍÍÍÍÍÍÍÍÍÍÍÍÍÍÍÍÍÍ¼

ÉÍÍÍÍÍÍÍÍÍÍÍÍÍÍÍÍÍÍÍÍÍÍÍÍÍÍÍÍÍÍÍÍÍÍÍÍÍÍ»
º          PRIORITY PREEMPTOR 2          º
º                                        º
ºDON'T OVERRIDE FLASH.....  X            º
ºFLASH ALL OUTPUTS........  .            º
ºYELLOW-RED GOES GREEN....  .            º
ºENABLE MAX PREEMPT TIME..  .            º
ºACTIVE ONLY DURING HOLD..  .            º
ºNO CVM IN FLASH..........  .            º
ºFAST FLASH GRN ON HOLD...  X            º
ºOUT OF FLASH.............  GREEN        º
º                                        º
º                                        º
```

```
º                                          º
º                                          º
º                                          º
ºADDITIONAL PAGE(S)                        º
ÈÍÍÍÍÍÍÍÍÍÍÍÍÍÍÍÍÍÍÍÍÍÍÍÍÍÍÍÍÍÍÍÍÍÍÍÍÍÍ¼

ÉÍÍÍÍÍÍÍÍÍÍÍÍÍÍÍÍÍÍÍÍÍÍÍÍÍÍÍÍÍÍÍÍÍÍÍÍÍÍ»
º          PRIORITY PREEMPTOR 2            º
º                                          º
ºMAX TIME..... 15  DURATION TIME..  0      º
ºMIN HOLD TIME.  0  DELAY TIME.....  0      º
ºMIN PED CLEAR.  0  INHIBIT TIME...  0      º
ºEXIT MAX......  0  HLD DELAY TIME.  0      º
º                                          º
º                GRN  YEL  RED             º
ºMINIMUM.......    0  0.0  0.0             º
ºTRACK CLEAR...    0  0.0  0.0             º
ºHOLD..........       0.0  0.0             º
º                                          º
ºLINKED PREEMPTOR.....  0                  º
º                                          º
º                                          º
ºEND OF SUBMENU                            º
ÈÍÍÍÍÍÍÍÍÍÍÍÍÍÍÍÍÍÍÍÍÍÍÍÍÍÍÍÍÍÍÍÍÍÍÍÍÍÍ¼

ÉÍÍÍÍÍÍÍÍÍÍÍÍÍÍÍÍÍÍÍÍÍÍÍÍÍÍÍÍÍÍÍÍÍÍÍÍÍÍ»
ºPRIORITY PREEMPTOR 3                1 1 1º
ºPHASE.........  1 2 3 4 5 6 7 8 9 0 1 2º
ºTERM PHASE OVLP  . . . . . . . . . . . .º
ºTRK CLR PHASE..  . . . . . . . . . . . .º
ºHOLD PHASES....  . X . . . . . . . . . .º
ºEXIT PHASES....  . . . . . . . . . . . .º
ºEXIT CALLS.....  . . . . . . . . . . . .º
ºSPARE..........  . . . . . . . . . . . .º
ºTERM OVERLAP...   A: .  B: .  C: .  D: .º
º                                          º
ºACTIVE.........YES  PED DARK....... NO    º
ºPRIORITY....... NO  PED ACTIVE..... NO    º
ºDET LOCK....... NO  ZERO PC TIME... NO    º
ºHOLD FLASH..... NO  PC THRU YELLOW. NO    º
ºTERM OVLP ASAP. NO  TERM PHASES.... NO    º
ºADDITIONAL PAGE(S)                        º
ÈÍÍÍÍÍÍÍÍÍÍÍÍÍÍÍÍÍÍÍÍÍÍÍÍÍÍÍÍÍÍÍÍÍÍÍÍÍÍ¼

ÉÍÍÍÍÍÍÍÍÍÍÍÍÍÍÍÍÍÍÍÍÍÍÍÍÍÍÍÍÍÍÍÍÍÍÍÍÍÍ»
º          PRIORITY PREEMPTOR 3            º
º                                          º
ºDON'T OVERRIDE FLASH.....  X              º
ºFLASH ALL OUTPUTS........  .              º
ºYELLOW-RED GOES GREEN....  .              º
ºENABLE MAX PREEMPT TIME..  X              º
ºACTIVE ONLY DURING HOLD..  .              º
ºNO CVM IN FLASH..........  .              º
ºFAST FLASH GRN ON HOLD...  .              º
ºOUT OF FLASH.............  GREEN          º
º                                          º
º                                          º
º                                          º
º                                          º
º                                          º
ºADDITIONAL PAGE(S)                        º
ÈÍÍÍÍÍÍÍÍÍÍÍÍÍÍÍÍÍÍÍÍÍÍÍÍÍÍÍÍÍÍÍÍÍÍÍÍÍÍ¼
```

```
É͸͸͸͸͸͸͸͸͸͸͸͸͸͸͸͸͸͸͸͸͸͸͸͸͸͸͸͸͸͸͸͸͸͸͸͸͸͸͸͸͸͸»
º          PRIORITY PREEMPTOR 3                                 º
º                                                               º
ºMAX TIME...... 90  DURATION TIME..  0                          º
ºMIN HOLD TIME.  0  DELAY TIME.....  0                          º
ºMIN PED CLEAR.  5  INHIBIT TIME...  0                          º
ºEXIT MAX......  0  HLD DELAY TIME.  0                          º
º                                                               º
º                GRN  YEL  RED                                  º
ºMINIMUM.......    0  0.0  0.0                                  º
ºTRACK CLEAR...    0  0.0  0.0                                  º
ºHOLD..........       0.0  0.0                                  º
º                                                               º
ºLINKED PREEMPTOR.....  0                                       º
º                                                               º
º                                                               º
ºEND OF SUBMENU                                                 º
È͸͸͸͸͸͸͸͸͸͸͸͸͸͸͸͸͸͸͸͸͸͸͸͸͸͸͸͸͸͸͸͸͸͸͸͸͸͸͸͸͸͸¼

É͸͸͸͸͸͸͸͸͸͸͸͸͸͸͸͸͸͸͸͸͸͸͸͸͸͸͸͸͸͸͸͸͸͸͸͸͸͸͸͸͸͸»
º          PRIORITY PREEMPTOR 4     1 1 1º
ºPHASE.....  1 2 3 4 5 6 7 8 9 0 1 2º
ºTERM PHASE OVLP  . . . . . . . . . . . .º
ºTRK CLR PHASE..  . . . . . . . . . . . .º
ºHOLD PHASES....  . . . . . . . . . . . .º
ºEXIT PHASES....  . . . . . . . . . . . .º
ºEXIT CALLS.....  . . . . . . . . . . . .º
ºSPARE..........  . . . . . . . . . . . .º
ºTERM OVERLAP...   A: .  B: .  C: .  D: .º
º                                                               º
ºACTIVE......... NO  PED DARK....... NO                         º
ºPRIORITY....... NO  PED ACTIVE..... NO                         º
ºDET LOCK....... NO  ZERO PC TIME... NO                         º
ºHOLD FLASH..... NO  PC THRU YELLOW. NO                         º
ºTERM OVLP ASAP. NO  TERM PHASES.... NO                         º
ºADDITIONAL PAGE(S)                                             º
È͸͸͸͸͸͸͸͸͸͸͸͸͸͸͸͸͸͸͸͸͸͸͸͸͸͸͸͸͸͸͸͸͸͸͸͸͸͸͸͸͸͸¼

É͸͸͸͸͸͸͸͸͸͸͸͸͸͸͸͸͸͸͸͸͸͸͸͸͸͸͸͸͸͸͸͸͸͸͸͸͸͸͸͸͸͸»
º          PRIORITY PREEMPTOR 4                                 º
º                                                               º
ºDON'T OVERRIDE FLASH.....  .                                   º
ºFLASH ALL OUTPUTS........  .                                   º
ºYELLOW-RED GOES GREEN....  .                                   º
ºENABLE MAX PREEMPT TIME..  .                                   º
ºACTIVE ONLY DURING HOLD..  .                                   º
ºNO CVM IN FLASH..........  .                                   º
ºFAST FLASH GRN ON HOLD...  .                                   º
ºOUT OF FLASH.............  GREEN                               º
º                                                               º
º                                                               º
º                                                               º
º                                                               º
º                                                               º
ºADDITIONAL PAGE(S)                                             º
È͸͸͸͸͸͸͸͸͸͸͸͸͸͸͸͸͸͸͸͸͸͸͸͸͸͸͸͸͸͸͸͸͸͸͸͸͸͸͸͸͸͸¼

♀

É͸͸͸͸͸͸͸͸͸͸͸͸͸͸͸͸͸͸͸͸͸͸͸͸͸͸͸͸͸͸͸͸͸͸͸͸͸͸͸͸͸͸»
º          PRIORITY PREEMPTOR 4                                 º
º                                                               º
ºMAX TIME......  0  DURATION TIME..  0                          º
ºMIN HOLD TIME.  0  DELAY TIME.....  0                          º
ºMIN PED CLEAR.  0  INHIBIT TIME...  0                          º
```

```
ºEXIT MAX......  0  HLD DELAY TIME.  0   º
º                                        º
º                GRN  YEL  RED           º
ºMINIMUM.......    0  0.0  0.0           º
ºTRACK CLEAR...    0  0.0  0.0           º
ºHOLD..........       0.0  0.0           º
º                                        º
ºLINKED PREEMPTOR.....  0                º
º                                        º
º                                        º
ºEND OF SUBMENU                          º
ÈÍÍÍÍÍÍÍÍÍÍÍÍÍÍÍÍÍÍÍÍÍÍÍÍÍÍÍÍÍÍÍÍÍÍÍÍÍÍ¼

ÉÍÍÍÍÍÍÍÍÍÍÍÍÍÍÍÍÍÍÍÍÍÍÍÍÍÍÍÍÍÍÍÍÍÍÍÍÍÍ»
ºPRIORITY PREEMPTOR 5                1 1 1º
ºPHASE.........  1 2 3 4 5 6 7 8 9 0 1 2º
ºTERM PHASE OVLP  . . . . . . . . . . . .º
ºTRK CLR PHASE..  . . . . . . . . . . . .º
ºHOLD PHASES....  . . . X . . . . . . . .º
ºEXIT PHASES....  . . . . . . . . . . . .º
ºEXIT CALLS.....  . . . . . . . . . . . .º
ºSPARE..........  . . . . . . . . . . . .º
ºTERM OVERLAP...   A: .  B: .  C: .  D: .º
º                                        º
ºACTIVE.........YES  PED DARK....... NO  º
ºPRIORITY....... NO  PED ACTIVE..... NO  º
ºDET LOCK....... NO  ZERO PC TIME... NO  º
ºHOLD FLASH..... NO  PC THRU YELLOW. NO  º
ºTERM OVLP ASAP. NO  TERM PHASES.... NO  º
ºADDITIONAL PAGE(S)                      º
ÈÍÍÍÍÍÍÍÍÍÍÍÍÍÍÍÍÍÍÍÍÍÍÍÍÍÍÍÍÍÍÍÍÍÍÍÍÍÍ¼

ÉÍÍÍÍÍÍÍÍÍÍÍÍÍÍÍÍÍÍÍÍÍÍÍÍÍÍÍÍÍÍÍÍÍÍÍÍÍÍ»
º          PRIORITY PREEMPTOR 5          º
º                                        º
ºDON'T OVERRIDE FLASH.....  X            º
ºFLASH ALL OUTPUTS........  .            º
ºYELLOW-RED GOES GREEN....  .            º
ºENABLE MAX PREEMPT TIME..  X            º
ºACTIVE ONLY DURING HOLD..  .            º
ºNO CVM IN FLASH..........  .            º
ºFAST FLASH GRN ON HOLD...  .            º
ºOUT OF FLASH.............  GREEN        º
º                                        º
º                                        º
º                                        º
º                                        º
º                                        º
ºADDITIONAL PAGE(S)                      º
ÈÍÍÍÍÍÍÍÍÍÍÍÍÍÍÍÍÍÍÍÍÍÍÍÍÍÍÍÍÍÍÍÍÍÍÍÍÍÍ¼

ÉÍÍÍÍÍÍÍÍÍÍÍÍÍÍÍÍÍÍÍÍÍÍÍÍÍÍÍÍÍÍÍÍÍÍÍÍÍÍ»
º          PRIORITY PREEMPTOR 5          º
º                                        º
ºMAX TIME...... 90  DURATION TIME..  0   º
ºMIN HOLD TIME.  0  DELAY TIME.....  0   º
ºMIN PED CLEAR.  0  INHIBIT TIME...  0   º
ºEXIT MAX......  0  HLD DELAY TIME.  0   º
º                                        º
º                GRN  YEL  RED           º
ºMINIMUM.......    0  0.0  0.0           º
ºTRACK CLEAR...    0  0.0  0.0           º
ºHOLD..........       0.0  0.0           º
```

```
º                                          º
ºLINKED PREEMPTOR.....  0                  º
º                                          º
º                                          º
ºEND OF SUBMENU                            º
ÈÍÍÍÍÍÍÍÍÍÍÍÍÍÍÍÍÍÍÍÍÍÍÍÍÍÍÍÍÍÍÍÍÍÍÍÍÍÍ¼

ÉÍÍÍÍÍÍÍÍÍÍÍÍÍÍÍÍÍÍÍÍÍÍÍÍÍÍÍÍÍÍÍÍÍÍÍÍÍÍ»
ºPRIORITY PREEMPTOR 6                 1 1 1º
ºPHASE.....  1 2 3 4 5 6 7 8 9 0 1 2º
ºTERM PHASE OVLP  . . . . . .º
ºTRK CLR PHASE..  . . . . . .º
ºHOLD PHASES....  . . X . . . . X . . . .º
ºEXIT PHASES....  . . . . . .º
ºEXIT CALLS.....  . . . . . .º
ºSPARE.....  . . . . . .º
ºTERM OVERLAP...   A: .  B: .  C: .  D: .º
º                                          º
ºACTIVE.....YES  PED DARK....... NO  º
ºPRIORITY....... NO  PED ACTIVE..... NO  º
ºDET LOCK....... NO  ZERO PC TIME... NO  º
ºHOLD FLASH..... NO  PC THRU YELLOW. NO  º
ºTERM OVLP ASAP. NO  TERM PHASES.... NO  º
ºADDITIONAL PAGE(S)                        º
ÈÍÍÍÍÍÍÍÍÍÍÍÍÍÍÍÍÍÍÍÍÍÍÍÍÍÍÍÍÍÍÍÍÍÍÍÍÍÍ¼

ÉÍÍÍÍÍÍÍÍÍÍÍÍÍÍÍÍÍÍÍÍÍÍÍÍÍÍÍÍÍÍÍÍÍÍÍÍÍÍ»
º          PRIORITY PREEMPTOR 6            º
º                                          º
ºDON'T OVERRIDE FLASH.....  X              º
ºFLASH ALL OUTPUTS........  .              º
ºYELLOW-RED GOES GREEN....  .              º
ºENABLE MAX PREEMPT TIME..  X              º
ºACTIVE ONLY DURING HOLD..  .              º
ºNO CVM IN FLASH..........  .              º
ºFAST FLASH GRN ON HOLD...  .              º
ºOUT OF FLASH.............  GREEN          º
º                                          º
º                                          º
º                                          º
º                                          º
º                                          º
ºADDITIONAL PAGE(S)                        º
ÈÍÍÍÍÍÍÍÍÍÍÍÍÍÍÍÍÍÍÍÍÍÍÍÍÍÍÍÍÍÍÍÍÍÍÍÍÍÍ¼

ÉÍÍÍÍÍÍÍÍÍÍÍÍÍÍÍÍÍÍÍÍÍÍÍÍÍÍÍÍÍÍÍÍÍÍÍÍÍÍ»
º          PRIORITY PREEMPTOR 6            º
º                                          º
ºMAX TIME..... 90  DURATION TIME..  0   º
ºMIN HOLD TIME.  0  DELAY TIME.....  0   º
ºMIN PED CLEAR.  0  INHIBIT TIME...  0   º
ºEXIT MAX......  0  HLD DELAY TIME.  0   º
º                                          º
º                GRN  YEL  RED             º
ºMINIMUM.......    0  0.0  0.0            º
ºTRACK CLEAR...    0  0.0  0.0            º
ºHOLD..........       0.0  0.0            º
º                                          º
ºLINKED PREEMPTOR.....  0                  º
º                                          º
º                                          º
ºEND OF SUBMENU                            º
ÈÍÍÍÍÍÍÍÍÍÍÍÍÍÍÍÍÍÍÍÍÍÍÍÍÍÍÍÍÍÍÍÍÍÍÍÍÍÍ¼
```

```
É͸»
º              BUS PREEMPTOR                 º
º                                            º
º                     - BUS PREEMPTOR -      º
º                      1    2    3    4      º
ºPREEMPTOR ACTIVE.     .    .    .    .      º
ºDETECTOR LOCK....     .    .    .    .      º
ºMAXIMUM TIME.....     0    0    0    0      º
ºRESERVICE TIME...     0    0    0    0      º
ºDELAY TIME.......     0    0    0    0      º
ºINHIBIT TIME.....     0    0    0    0      º
ºENTRANCE GREEN...     0    0    0    0      º
ºENTRANCE PED CLR.     0    0    0    0      º
ºENTRANCE YELLOW..   0.0  0.0  0.0  0.0      º
ºENTRANCE RED.....   0.0  0.0  0.0  0.0      º
ºMIN HOLD TIME....     0    0    0    0      º
ºADDITIONAL PAGE(S)                          º
È͸¼

É͸»
º              BUS PREEMPTOR                 º
º                                            º
º                  ------ HOLD PHASE -----   º
º                                     1 1 1  º
º                  1 2 3 4 5 6 7 8 9 0 1 2   º
ºPREEMPTOR 1....   . . . . . . . . . . . .   º
ºPREEMPTOR 2....   . . . . . . . . . . . .   º
ºPREEMPTOR 3....   . . . . . . . . . . . .   º
ºPREEMPTOR 4....   . . . . . . . . . . . .   º
º                                            º
º                                            º
º                                            º
º                                            º
º                                            º
º                                            º
ºEND OF SUBMENU                              º
È͸¼

♀

É͸»
º*******************************************º
º*   ECONOLITE CONTROL PRODUCTS, INC.      *º
º*             ASC/2-2000                  *º
º*          Copyright (C) 1992             *º
º*                                         *º
º* City of Ontario, Traffic Engineering    *º
º*  ASC/2-2100  Configuration Ver. 1.1     *º
º*                                         *º
º*   SOFTWARE ASSY             VERSION     *º
º*   BOOT            32783        1.26     *º
º*   MAIN PROGRAM    32787        1.61     *º
º*                                         *º
º*                                         *º
º*                                         *º
º*                                         *º
º*******************************************º
È͸¼

É͸»
º       NIC/TOD CLOCK/CALENDAR DATA          º
º                                            º
º                                            º
ºDATE SET:  5/24/18  | ENTER DATE/TIME       º
```

```
ºTIME SET: 10:19:30  | THEN PRESS ENTER  º
º                                       º
ºMANUAL NIC PROGRAM STEP    0           º
ºMANUAL TOD PROGRAM STEP    0           º
º                                       º
ºSYNC REFERENCE TIME    0:00            º
ºSYNC REFERENCE.........REFERENCE TIME  º
º                                       º
ºWEEK 1 BEGINS ON 1ST SUNDAY  .         º
ºDISABLE DAYLIGHT SAVINGS     .         º
ºDST BEGINS LAST SUNDAY       .         º
ºEND OF SUBMENU                         º
ÈÍÍÍÍÍÍÍÍÍÍÍÍÍÍÍÍÍÍÍÍÍÍÍÍÍÍÍÍÍÍÍÍÍÍÍÍÍÍ¼

ÉÍÍÍÍÍÍÍÍÍÍÍÍÍÍÍÍÍÍÍÍÍÍÍÍÍÍÍÍÍÍÍÍÍÍÍÍÍÍ»
º         NIC/TOD WEEKLY PROGRAMS       º
ºWEEK  SUN  MON  TUE  WED  THU  FRI  SAT º
º  1    2    1    1    1    1    1    2  º
º  2    2    1    1    1    1    1    2  º
º  3    2    1    1    1    1    1    2  º
º  4    2    1    1    1    1    1    2  º
º  5    2    1    1    1    1    1    2  º
º  6    2    1    1    1    1    1    2  º
º  7    2    1    1    1    1    1    2  º
º  8    2    1    1    1    1    1    2  º
º  9    2    1    1    1    1    1    2  º
º 10    2    1    1    1    1    1    2  º
º                                       º
º                                       º
º                                       º
ºEND OF SUBMENU                         º
ÈÍÍÍÍÍÍÍÍÍÍÍÍÍÍÍÍÍÍÍÍÍÍÍÍÍÍÍÍÍÍÍÍÍÍÍÍÍÍ¼

♀
ÉÍÍÍÍÍÍÍÍÍÍÍÍÍÍÍÍÍÍÍÍÍÍÍÍÍÍÍÍÍÍÍÍÍÍÍÍÍÍ»
º         NIC/TOD YEARLY PROGRAM        º
ºWEEK OF YEAR      1  2  3  4  5  6  7  8º
ºWEEKLY PROGRAM    1  1  1  1  1  1  1  1º
º                                       º
ºWEEK OF YEAR      9 10 11 12 13 14 15 16º
ºWEEKLY PROGRAM    1  1  1  1  1  1  1  1º
º                                       º
ºWEEK OF YEAR     17 18 19 20 21 22 23 24º
ºWEEKLY PROGRAM    1  1  1  1  1  1  1  1º
º                                       º
ºWEEK OF YEAR     25 26 27 28 29 30 31 32º
ºWEEKLY PROGRAM    1  1  1  1  1  1  1  1º
º                                       º
ºWEEK OF YEAR     33 34 35 36 37 38 39 40º
ºWEEKLY PROGRAM    1  1  1  1  1  1  1  1º
ºADDITIONAL SCREEN(S)                   º
ÈÍÍÍÍÍÍÍÍÍÍÍÍÍÍÍÍÍÍÍÍÍÍÍÍÍÍÍÍÍÍÍÍÍÍÍÍÍÍ¼

ÉÍÍÍÍÍÍÍÍÍÍÍÍÍÍÍÍÍÍÍÍÍÍÍÍÍÍÍÍÍÍÍÍÍÍÍÍÍÍ»
º         NIC/TOD YEARLY PROGRAM        º
º                                       º
ºWEEK OF YEAR     41 42 43 44 45 46 47 48º
ºWEEKLY PROGRAM    1  1  1  1  1  1  1  1º
º                                       º
ºWEEK OF YEAR              49 50 51 52 53º
ºWEEKLY PROGRAM             1  1  1  1  1º
º                                       º
º                                       º
º                                       º
```

END OF SUBMENU

NIC/TOD HOLIDAY PROGRAM

HOLIDAY	FLOAT/ FIXED	MON/ MON	DOW/ DOM	WOM/ YEAR	PROG
1	FIXED	0	0	0	0
2	FIXED	0	0	0	0
3	FIXED	0	0	0	0
4	FIXED	0	0	0	0
5	FIXED	0	0	0	0
6	FIXED	0	0	0	0
7	FIXED	0	0	0	0
8	FIXED	0	0	0	0
9	FIXED	0	0	0	0
10	FIXED	0	0	0	0
11	FIXED	0	0	0	0
12	FIXED	0	0	0	0

ADDITIONAL SCREEN(S)

NIC/TOD HOLIDAY PROGRAM

HOLIDAY	FLOAT/ FIXED	MON/ MON	DOW/ DOM	WOM/ YEAR	PROG
13	FIXED	0	0	0	0
14	FIXED	0	0	0	0
15	FIXED	0	0	0	0
16	FIXED	0	0	0	0
17	FIXED	0	0	0	0
18	FIXED	0	0	0	0
19	FIXED	0	0	0	0
20	FIXED	0	0	0	0
21	FIXED	0	0	0	0
22	FIXED	0	0	0	0
23	FIXED	0	0	0	0
24	FIXED	0	0	0	0

ADDITIONAL SCREEN(S)

NIC/TOD HOLIDAY PROGRAM

HOLIDAY	FLOAT/ FIXED	MON/ MON	DOW/ DOM	WOM/ YEAR	PROG
25	FIXED	0	0	0	0
26	FIXED	0	0	0	0
27	FIXED	0	0	0	0
28	FIXED	0	0	0	0
29	FIXED	0	0	0	0
30	FIXED	0	0	0	0
31	FIXED	0	0	0	0
32	FIXED	0	0	0	0
33	FIXED	0	0	0	0
34	FIXED	0	0	0	0
35	FIXED	0	0	0	0
36	FIXED	0	0	0	0

END OF SUBMENU

```
ÈÍÍÍÍÍÍÍÍÍÍÍÍÍÍÍÍÍÍÍÍÍÍÍÍÍÍÍÍÍÍÍÍÍÍÍÍÍÍÍÍÍÍ¼

♀
ÉÍÍÍÍÍÍÍÍÍÍÍÍÍÍÍÍÍÍÍÍÍÍÍÍÍÍÍÍÍÍÍÍÍÍÍÍÍÍÍÍÍÍ»
º*****************************************º
º*   ECONOLITE CONTROL PRODUCTS, INC.    *º
º*            ASC/2-2000                 *º
º*          Copyright (C) 1992           *º
º*                                       *º
º* City of Ontario, Traffic Engineering *º
º*  ASC/2-2100  Configuration Ver. 1.1   *º
º*                                       *º
º*   SOFTWARE ASSY             VERSION   *º
º*   BOOT            32783        1.26   *º
º*   MAIN PROGRAM    32787        1.61   *º
º*                                       *º
º*                                       *º
º*                                       *º
º*                                       *º
º*****************************************º
ÈÍÍÍÍÍÍÍÍÍÍÍÍÍÍÍÍÍÍÍÍÍÍÍÍÍÍÍÍÍÍÍÍÍÍÍÍÍÍÍÍÍÍ¼

ÉÍÍÍÍÍÍÍÍÍÍÍÍÍÍÍÍÍÍÍÍÍÍÍÍÍÍÍÍÍÍÍÍÍÍÍÍÍÍÍÍÍÍ»
º          DETECTOR TYPE/TIMERS           º
º                              NO    LOG   º
ºDET TYPE LOCK  EXTEND DELAY RESET ENABLEº
º 1   0     .     0.0     0    .       .  º
º 2   1     .     0.0     5    .       .  º
º 3   1     .     0.0     2    .       .  º
º 4   0     .     0.0     0    .       .  º
º 5   0     .     0.0     0    .       .  º
º 6   0     .     0.0     0    .       .  º
º 7   0     .     0.0     0    .       .  º
º 8   0     .     0.0     0    .       .  º
º 9   0     .     0.0     0    .       .  º
º10   0     .     0.0     0    .       .  º
º11   0     .     0.0     0    .       .  º
º12   0     .     0.0     0    .       .  º
ºADDITIONAL SCREEN(S)                     º
ÈÍÍÍÍÍÍÍÍÍÍÍÍÍÍÍÍÍÍÍÍÍÍÍÍÍÍÍÍÍÍÍÍÍÍÍÍÍÍÍÍÍÍ¼

ÉÍÍÍÍÍÍÍÍÍÍÍÍÍÍÍÍÍÍÍÍÍÍÍÍÍÍÍÍÍÍÍÍÍÍÍÍÍÍÍÍÍÍ»
º          DETECTOR TYPE/TIMERS           º
º                              NO    LOG   º
ºDET TYPE LOCK  EXTEND DELAY RESET ENABLEº
º13   0     .     0.0     0    .       .  º
º14   0     .     0.0     0    .       .  º
º15   0     .     0.0     0    .       .  º
º16   0     .     0.0     0    .       .  º
º17   0     .     0.0     0    .       .  º
º18   0     .     0.0     0    .       .  º
º19   0     .     0.0     0    .       .  º
º20   0     .     0.0     0    .       .  º
º21   0     .     0.0     0    .       .  º
º22   0     .     0.0     0    .       .  º
º23   0     .     0.0     0    .       .  º
º24   0     .     0.0     0    .       .  º
ºADDITIONAL SCREEN(S)                     º
ÈÍÍÍÍÍÍÍÍÍÍÍÍÍÍÍÍÍÍÍÍÍÍÍÍÍÍÍÍÍÍÍÍÍÍÍÍÍÍÍÍÍÍ¼

♀
ÉÍÍÍÍÍÍÍÍÍÍÍÍÍÍÍÍÍÍÍÍÍÍÍÍÍÍÍÍÍÍÍÍÍÍÍÍÍÍÍÍÍÍ»
º          DETECTOR TYPE/TIMERS           º
º                              NO    LOG   º
ºDET TYPE LOCK  EXTEND DELAY RESET ENABLEº
```

```
º25   0     .     0.0     0    .      .  º
º26   0     .     0.0     0    .      .  º
º27   0     .     0.0     0    .      .  º
º28   0     .     0.0     0    .      .  º
º29   0     .     0.0     0    .      .  º
º30   0     .     0.0     0    .      .  º
º31   0     .     0.0     0    .      .  º
º32   0     .     0.0     0    .      .  º
º33   0     .     0.0     0    .      .  º
º34   0     .     0.0     0    .      .  º
º35   0     .     0.0     0    .      .  º
º36   0     .     0.0     0    .      .  º
ºADDITIONAL SCREEN(S)                     º
ÈÍÍÍÍÍÍÍÍÍÍÍÍÍÍÍÍÍÍÍÍÍÍÍÍÍÍÍÍÍÍÍÍÍÍÍÍÍÍÍÍÍ¼

ÉÍÍÍÍÍÍÍÍÍÍÍÍÍÍÍÍÍÍÍÍÍÍÍÍÍÍÍÍÍÍÍÍÍÍÍÍÍÍÍÍÍ»
º          DETECTOR TYPE/TIMERS           º
º                                NO    LOG   º
ºDET TYPE LOCK  EXTEND DELAY RESET ENABLEº
º37   0     .     0.0     0    .      .  º
º38   0     .     0.0     0    .      .  º
º39   0     .     0.0     0    .      .  º
º40   0     .     0.0     0    .      .  º
º41   0     .     0.0     0    .      .  º
º42   0     .     0.0     0    .      .  º
º43   0     .     0.0     0    .      .  º
º44   0     .     0.0     0    .      .  º
º45   0     .     0.0     0    .      .  º
º46   0     .     0.0     0    .      .  º
º47   0     .     0.0     0    .      .  º
º48   0     .     0.0     0    .      .  º
ºADDITIONAL SCREEN(S)                     º
ÈÍÍÍÍÍÍÍÍÍÍÍÍÍÍÍÍÍÍÍÍÍÍÍÍÍÍÍÍÍÍÍÍÍÍÍÍÍÍÍÍÍ¼

ÉÍÍÍÍÍÍÍÍÍÍÍÍÍÍÍÍÍÍÍÍÍÍÍÍÍÍÍÍÍÍÍÍÍÍÍÍÍÍÍÍÍ»
º          DETECTOR TYPE/TIMERS           º
º                                NO    LOG   º
ºDET TYPE LOCK  EXTEND DELAY RESET ENABLEº
º49   0     .     0.0     0    .      .  º
º50   0     .     0.0     0    .      .  º
º51   0     .     0.0     0    .      .  º
º52   0     .     0.0     0    .      .  º
º53   0     .     0.0     0    .      .  º
º54   0     .     0.0     0    .      .  º
º55   0     .     0.0     0    .      .  º
º56   0     .     0.0     0    .      .  º
º57   0     .     0.0     0    .      .  º
º58   0     .     0.0     0    .      .  º
º59   0     .     0.0     0    .      .  º
º60   0     .     0.0     0    .      .  º
ºADDITIONAL SCREEN(S)                     º
ÈÍÍÍÍÍÍÍÍÍÍÍÍÍÍÍÍÍÍÍÍÍÍÍÍÍÍÍÍÍÍÍÍÍÍÍÍÍÍÍÍÍ¼

♀

ÉÍÍÍÍÍÍÍÍÍÍÍÍÍÍÍÍÍÍÍÍÍÍÍÍÍÍÍÍÍÍÍÍÍÍÍÍÍÍÍÍÍ»
º          DETECTOR TYPE/TIMERS           º
º                                NO    LOG   º
ºDET TYPE LOCK  EXTEND DELAY RESET ENABLEº
º53   0     .     0.0     0    .      .  º
º54   0     .     0.0     0    .      .  º
º55   0     .     0.0     0    .      .  º
º56   0     .     0.0     0    .      .  º
º57   0     .     0.0     0    .      .  º
º58   0     .     0.0     0    .      .  º
```

```
º59   0     .     0.0     0    .      .  º
º60   0     .     0.0     0    .      .  º
º61   0     .     0.0     0    .      .  º
º62   0     .     0.0     0    .      .  º
º63   0     .     0.0     0    .      .  º
º64   0     .     0.0     0    .      .  º
ºEND OF SUBMENU                           º
ÈÍÍÍÍÍÍÍÍÍÍÍÍÍÍÍÍÍÍÍÍÍÍÍÍÍÍÍÍÍÍÍÍÍÍÍÍÍÍÍÍ¼

ÉÍÍÍÍÍÍÍÍÍÍÍÍÍÍÍÍÍÍÍÍÍÍÍÍÍÍÍÍÍÍÍÍÍÍÍÍÍÍÍÍ»
º      DETECTOR PHASE ASSIGNMENT          º
º              PHASE ASSIGNMENT: 1 1 1    º
ºDETECTOR      1 2 3 4 5 6 7 8 9 0 1 2    º
º    1         . . . . . . . . . . . .    º
º    2         . X . . . . . . . . . .    º
º    3         . . X . . . . . . . . .    º
º    4         . . . X . . . . . . . .    º
º    5         . . . . . . . . . . . .    º
º    6         . . . . . . . . . . . .    º
º    7         . . . . . . . . . . . .    º
º    8         . . . . . . . X . . . .    º
º    9         . . . . . . . . . . . .    º
º   10         . . . . . . . . . . . .    º
º   11         . . . . . . . . . . . .    º
º   12         . . . X . . . . . . . .    º
ºADDITIONAL SCREEN(S)                     º
ÈÍÍÍÍÍÍÍÍÍÍÍÍÍÍÍÍÍÍÍÍÍÍÍÍÍÍÍÍÍÍÍÍÍÍÍÍÍÍÍÍ¼

ÉÍÍÍÍÍÍÍÍÍÍÍÍÍÍÍÍÍÍÍÍÍÍÍÍÍÍÍÍÍÍÍÍÍÍÍÍÍÍÍÍ»
º      DETECTOR PHASE ASSIGNMENT          º
º              PHASE ASSIGNMENT: 1 1 1    º
ºDETECTOR      1 2 3 4 5 6 7 8 9 0 1 2    º
º   13         . . . . . . . . . . . .    º
º   14         . . . . . . . . . . . .    º
º   15         . . . . . . . . . . . .    º
º   16         . . . . . . . X . . . .    º
º   17         . . . . . . . . . . . .    º
º   18         . . . . . . . . . . . .    º
º   19         . . . . . . . . . . . .    º
º   20         . . . . . . . . . . . .    º
º   21         . . . . . . . . . . . .    º
º   22         . . . . . . . . . . . .    º
º   23         . . . . . . . . . . . .    º
º   24         . . . . . . . . . . . .    º
ºADDITIONAL SCREEN(S)                     º
ÈÍÍÍÍÍÍÍÍÍÍÍÍÍÍÍÍÍÍÍÍÍÍÍÍÍÍÍÍÍÍÍÍÍÍÍÍÍÍÍÍ¼

ÉÍÍÍÍÍÍÍÍÍÍÍÍÍÍÍÍÍÍÍÍÍÍÍÍÍÍÍÍÍÍÍÍÍÍÍÍÍÍÍÍ»
ºPED AND SYSTEM DETECTOR LOCAL ASSIGNMENTº
º                                         º
ºDETECTOR LOG INTERVAL........  0 MINUTESº
º-----------------------------------------º
ºLOCAL          - PHASE PED DETECTOR -    º
ºPED DET         1   2   3   4   5   6    º
ºNUMBER..        0   1   0   0   0   0    º
º                7   8   9  10  11  12    º
ºNUMBER..        0   0   0   0   0   0    º
º-----------------------------------------º
ºLOCAL      -- LOCAL SYSTEM DET NUMBER ---º
ºDETECTOR   1   2   3   4   5   6   7   8º
ºNUMBER..   0   0   0   0   0   0   0   0º
º           9  10  11  12  13  14  15  16º
ºNUMBER..   0   0   0   0   0   0   0   0º
```

```
ºEND OF SUBMENU                                                 º
ÈÍÍÍÍÍÍÍÍÍÍÍÍÍÍÍÍÍÍÍÍÍÍÍÍÍÍÍÍÍÍÍÍÍÍÍÍÍÍÍÍÍÍÍÍÍÍÍÍÍÍÍÍÍÍ¼

ÉÍÍÍÍÍÍÍÍÍÍÍÍÍÍÍÍÍÍÍÍÍÍÍÍÍÍÍÍÍÍÍÍÍÍÍÍÍÍÍÍÍÍÍÍÍÍÍÍÍÍÍÍÍÍ»
º            CROSS SWITCHING                                    º
º               PHASES:           1 1 1                        º
ºDETECTOR       1 2 3 4 5 6 7 8 9 0 1 2                        º
º    1          . . . . . . . . . . . .                        º
º    2          . X . . . . . . . . . .                        º
º    3          . . . . . . . . . . . .                        º
º    4          . . . . . . . . . . . .                        º
º    5          . . . . . . . . . . . .                        º
º    6          . . . . . . . . . . . .                        º
º    7          . . . . . . . . . . . .                        º
º    8          . . . . . . . . . . . .                        º
º    9          . . . . . . . . . . . .                        º
º   10          . X . . . . . . . . . .                        º
º   11          . . . . . . . . . . . .                        º
º   12          . . . . . . . . . . . .                        º
ºADDITIONAL SCREEN(S)                                          º
ÈÍÍÍÍÍÍÍÍÍÍÍÍÍÍÍÍÍÍÍÍÍÍÍÍÍÍÍÍÍÍÍÍÍÍÍÍÍÍÍÍÍÍÍÍÍÍÍÍÍÍÍÍÍÍ¼

ÉÍÍÍÍÍÍÍÍÍÍÍÍÍÍÍÍÍÍÍÍÍÍÍÍÍÍÍÍÍÍÍÍÍÍÍÍÍÍÍÍÍÍÍÍÍÍÍÍÍÍÍÍÍÍ»
º             SPEED DETECTORS                                  º
º                                                              º
º  SPEED DET NUMBER:  ...1....2....3....4º
ºONE DETECTOR SPEED:                                           º
º LOCAL DET NUMBER..     0    0    0    0º
º VEHICLE LENGTH....     0    0    0    0º
º LOOP LENGTH.......     0    0    0    0º
º                                                              º
ºTWO DETECTOR SPEED:                                           º
º LOCAL DET NUMBER..     0    0    0    0º
º SPEED TRAP LENGTH.     0    0    0    0º
º                                                              º
ºENABLE LOG.........     .    .    .    .º
º                                                              º
ºUNITS:  INCHES                                                º
ºADDITIONAL PAGE(S)                          MORE->º
ÈÍÍÍÍÍÍÍÍÍÍÍÍÍÍÍÍÍÍÍÍÍÍÍÍÍÍÍÍÍÍÍÍÍÍÍÍÍÍÍÍÍÍÍÍÍÍÍÍÍÍÍÍÍÍ¼

♀

ÉÍÍÍÍÍÍÍÍÍÍÍÍÍÍÍÍÍÍÍÍÍÍÍÍÍÍÍÍÍÍÍÍÍÍÍÍÍÍÍÍÍÍÍÍÍÍÍÍÍÍÍÍÍÍ»
º             SPEED DETECTORS                                  º
º                                                              º
º  SPEED DET NUMBER:  ...5....6....7....8º
ºONE DETECTOR SPEED:                                           º
º LOCAL DET NUMBER..     0    0    0    0º
º VEHICLE LENGTH....     0    0    0    0º
º LOOP LENGTH.......     0    0    0    0º
º                                                              º
ºTWO DETECTOR SPEED:                                           º
º LOCAL DET NUMBER..     0    0    0    0º
º SPEED TRAP LENGTH.     0    0    0    0º
º                                                              º
ºENABLE LOG.........     .    .    .    .º
º                                                              º
ºUNITS:  INCHES                                                º
ºADDITIONAL PAGE(S)                    <-MORE  º
ÈÍÍÍÍÍÍÍÍÍÍÍÍÍÍÍÍÍÍÍÍÍÍÍÍÍÍÍÍÍÍÍÍÍÍÍÍÍÍÍÍÍÍÍÍÍÍÍÍÍÍÍÍÍÍ¼

ÉÍÍÍÍÍÍÍÍÍÍÍÍÍÍÍÍÍÍÍÍÍÍÍÍÍÍÍÍÍÍÍÍÍÍÍÍÍÍÍÍÍÍÍÍÍÍÍÍÍÍÍÍÍÍ»
º             SPEED DETECTORS                                  º
º                                                              º
```

```
º  SPEED DET NUMBER:  ...9...10...11...12º
ºONE DETECTOR SPEED:                      º
º LOCAL DET NUMBER..     0    0    0    0º
º VEHICLE LENGTH....     0    0    0    0º
º LOOP LENGTH.......     0    0    0    0º
º                                         º
ºTWO DETECTOR SPEED:                      º
º LOCAL DET NUMBER..     0    0    0    0º
º SPEED TRAP LENGTH.     0    0    0    0º
º                                         º
ºENABLE LOG.........     .    .    .    .º
º                                         º
º                                         º
ºEND OF SUBMENU                    MORE->º
ÈÍÍÍÍÍÍÍÍÍÍÍÍÍÍÍÍÍÍÍÍÍÍÍÍÍÍÍÍÍÍÍÍÍÍÍÍÍÍÍÍÍ¼

ÉÍÍÍÍÍÍÍÍÍÍÍÍÍÍÍÍÍÍÍÍÍÍÍÍÍÍÍÍÍÍÍÍÍÍÍÍÍÍÍÍÍ»
º            SPEED DETECTORS              º
º                                         º
º  SPEED DET NUMBER:  ..13...14...15...16º
ºONE DETECTOR SPEED:                      º
º LOCAL DET NUMBER..     0    0    0    0º
º VEHICLE LENGTH....     0    0    0    0º
º LOOP LENGTH.......     0    0    0    0º
º                                         º
ºTWO DETECTOR SPEED:                      º
º LOCAL DET NUMBER..     0    0    0    0º
º SPEED TRAP LENGTH.     0    0    0    0º
º                                         º
ºENABLE LOG.........     .    .    .    .º
º                                         º
º                                         º
ºEND OF SUBMENU                  <-MORE   º
ÈÍÍÍÍÍÍÍÍÍÍÍÍÍÍÍÍÍÍÍÍÍÍÍÍÍÍÍÍÍÍÍÍÍÍÍÍÍÍÍÍÍ¼

ÉÍÍÍÍÍÍÍÍÍÍÍÍÍÍÍÍÍÍÍÍÍÍÍÍÍÍÍÍÍÍÍÍÍÍÍÍÍÍÍÍÍ»
º      PED DETECTOR DIAGNOSTIC PLAN       º
º                                         º
ºPLAN DET NUMBER  1  2  3  4  5  6  7  8 º
º  1  DIAG NUM..  0  0  0  0  0  0  0  0 º
º     SCALING...  1  1  1  1  1  1  1  1 º
º  2  DIAG NUM..  0  0  0  0  0  0  0  0 º
º     SCALING...  1  1  1  1  1  1  1  1 º
º  3  DIAG NUM..  0  0  0  0  0  0  0  0 º
º     SCALING...  1  1  1  1  1  1  1  1 º
º  4  DIAG NUM..  0  0  0  0  0  0  0  0 º
º     SCALING...  1  1  1  1  1  1  1  1 º
º  5  DIAG NUM..  0  0  0  0  0  0  0  0 º
º     SCALING...  1  1  1  1  1  1  1  1 º
º  6  DIAG NUM..  0  0  0  0  0  0  0  0 º
º     SCALING...  1  1  1  1  1  1  1  1 º
ºADDITIONAL SCREEN(S)              MORE->º
ÈÍÍÍÍÍÍÍÍÍÍÍÍÍÍÍÍÍÍÍÍÍÍÍÍÍÍÍÍÍÍÍÍÍÍÍÍÍÍÍÍÍ¼

ÉÍÍÍÍÍÍÍÍÍÍÍÍÍÍÍÍÍÍÍÍÍÍÍÍÍÍÍÍÍÍÍÍÍÍÍÍÍÍÍÍÍ»
º      PED DETECTOR DIAGNOSTIC PLAN       º
º                                         º
ºPLAN DET NUMBER  1  2  3  4  5  6  7  8 º
º  7  DIAG NUM..  0  0  0  0  0  0  0  0 º
º     SCALING...  1  1  1  1  1  1  1  1 º
º  8  DIAG NUM..  0  0  0  0  0  0  0  0 º
º     SCALING...  1  1  1  1  1  1  1  1 º
º                                         º
```

```
º                                                 º
º                                                 º
º                                                 º
º                                                 º
º                                                 º
º                                                 º
º                                                 º
ºEND OF SUBMENU                        MORE->º
ÈÍÍÍÍÍÍÍÍÍÍÍÍÍÍÍÍÍÍÍÍÍÍÍÍÍÍÍÍÍÍÍÍÍÍÍÍÍÍÍÍÍÍ¼

ÉÍÍÍÍÍÍÍÍÍÍÍÍÍÍÍÍÍÍÍÍÍÍÍÍÍÍÍÍÍÍÍÍÍÍÍÍÍÍÍÍÍÍ»
º      PED DETECTOR DIAGNOSTIC PLAN               º
º                                                 º
ºPLAN DET NUMBER  9 10 11 12                      º
º  1  DIAG NUM..  0  0  0  0                      º
º     SCALING...  1  1  1  1                      º
º  2  DIAG NUM..  0  0  0  0                      º
º     SCALING...  1  1  1  1                      º
º  3  DIAG NUM..  0  0  0  0                      º
º     SCALING...  1  1  1  1                      º
º  4  DIAG NUM..  0  0  0  0                      º
º     SCALING...  1  1  1  1                      º
º  5  DIAG NUM..  0  0  0  0                      º
º     SCALING...  1  1  1  1                      º
º  6  DIAG NUM..  0  0  0  0                      º
º     SCALING...  1  1  1  1                      º
ºADDITIONAL SCREEN(S)                  <-MORE     º
ÈÍÍÍÍÍÍÍÍÍÍÍÍÍÍÍÍÍÍÍÍÍÍÍÍÍÍÍÍÍÍÍÍÍÍÍÍÍÍÍÍÍÍ¼

ÉÍÍÍÍÍÍÍÍÍÍÍÍÍÍÍÍÍÍÍÍÍÍÍÍÍÍÍÍÍÍÍÍÍÍÍÍÍÍÍÍÍÍ»
º      PED DETECTOR DIAGNOSTIC PLAN               º
º                                                 º
ºPLAN DET NUMBER  9 10 11 12                      º
º  7  DIAG NUM..  0  0  0  0                      º
º     SCALING...  1  1  1  1                      º
º  8  DIAG NUM..  0  0  0  0                      º
º     SCALING...  1  1  1  1                      º
º                                                 º
º                                                 º
º                                                 º
º                                                 º
º                                                 º
º                                                 º
º                                                 º
º                                                 º
ºEND OF SUBMENU                        <-MORE     º
ÈÍÍÍÍÍÍÍÍÍÍÍÍÍÍÍÍÍÍÍÍÍÍÍÍÍÍÍÍÍÍÍÍÍÍÍÍÍÍÍÍÍÍ¼

ÉÍÍÍÍÍÍÍÍÍÍÍÍÍÍÍÍÍÍÍÍÍÍÍÍÍÍÍÍÍÍÍÍÍÍÍÍÍÍÍÍÍÍ»
º      DETECTOR DIAGNOSTIC INTERVAL               º
º                                                 º
ºDIAGNOSTIC      NO        MAX      ERRATIC      º
º  NUMBER     ACTIVITY   PRESENCE   COUNTS       º
º    1           0          0          0         º
º    2           0          0          0         º
º    3           0          0          0         º
º    4           0          0          0         º
º    5           0          0          0         º
º    6           0          0          0         º
º    7           0          0          0         º
º    8           0          0          0         º
º    9           0          0          0         º
º   10           0          0          0         º
```

```
º   11           0          0          0   º
ºADDITIONAL SCREEN(S)                       º
ÈÍÍÍÍÍÍÍÍÍÍÍÍÍÍÍÍÍÍÍÍÍÍÍÍÍÍÍÍÍÍÍÍÍÍÍÍÍÍÍÍÍ¼

ÉÍÍÍÍÍÍÍÍÍÍÍÍÍÍÍÍÍÍÍÍÍÍÍÍÍÍÍÍÍÍÍÍÍÍÍÍÍÍÍÍÍ»
º      DETECTOR DIAGNOSTIC INTERVAL         º
º                                           º
ºDIAGNOSTIC     NO        MAX     ERRATIC   º
º  NUMBER    ACTIVITY   PRESENCE  COUNTS    º
º   12           0          0          0   º
º   13           0          0          0   º
º   14           0          0          0   º
º   15           0          0          0   º
º   16           0          0          0   º
º   17           0          0          0   º
º   18           0          0          0   º
º   19           0          0          0   º
º   20           0          0          0   º
º   21           0          0          0   º
º   22           0          0          0   º
ºADDITIONAL SCREEN(S)                       º
ÈÍÍÍÍÍÍÍÍÍÍÍÍÍÍÍÍÍÍÍÍÍÍÍÍÍÍÍÍÍÍÍÍÍÍÍÍÍÍÍÍÍ¼
♀
ÉÍÍÍÍÍÍÍÍÍÍÍÍÍÍÍÍÍÍÍÍÍÍÍÍÍÍÍÍÍÍÍÍÍÍÍÍÍÍÍÍÍ»
º      DETECTOR DIAGNOSTIC INTERVAL         º
º                                           º
ºDIAGNOSTIC     NO        MAX     ERRATIC   º
º  NUMBER    ACTIVITY   PRESENCE  COUNTS    º
º   22           0          0          0   º
º   23           0          0          0   º
º   24           0          0          0   º
º   25           0          0          0   º
º   26           0          0          0   º
º   27           0          0          0   º
º   28           0          0          0   º
º   29           0          0          0   º
º   30           0          0          0   º
º   31           0          0          0   º
º   32           0          0          0   º
ºEND OF SUBMENU                             º
ÈÍÍÍÍÍÍÍÍÍÍÍÍÍÍÍÍÍÍÍÍÍÍÍÍÍÍÍÍÍÍÍÍÍÍÍÍÍÍÍÍÍ¼
♀
```

Ontario, CA

ECC3NOUTE CONTROL. PRODUCTS. INC.

Solutions that Move the World™

Archibald Avenue @ Airport Drive - 10.211.54.61 - Cobalt - Econolite Type - Cobalt

Configuration Controller Sequence

Phase Ring Sequence.....(Note: Sequences identical to the prior one are not printed)

	01	02	03	04	05	06	07	08	09	10	11	12	13	14	15	16
	B		B		B		B		B							
Sequence 1																
Ring 1	1	2	3	4	9	10	13	14	.	.	.	.	.	.	.	.
Ring 2	5	6	7	8	11	12	15	16	.	.	.	.	.	.	.	.
Sequence 2																
Ring 1	2	1	3	4	10	9	13	14	.	.	.	.	.	.	.	.
Ring 2	5	6	7	8	11	12	15	16	.	.	.	.	.	.	.	.
Sequence 3																
Ring 1	1	2	4	3	9	10	14	13	.	.	.	.	.	.	.	.
Ring 2	5	6	7	8	11	12	15	16	.	.	.	.	.	.	.	.
Sequence 4																
Ring 1	2	1	4	3	10	9	14	13	.	.	.	.	.	.	.	.
Ring 2	5	6	7	8	11	12	15	16	.	.	.	.	.	.	.	.
Sequence 5																
Ring 1	1	2	3	4	9	10	13	14	.	.	.	.	.	.	.	.
Ring 2	6	5	7	8	12	11	15	16	.	.	.	.	.	.	.	.
Sequence 6																
Ring 1	2	1	3	4	10	9	13	14	.	.	.	.	.	.	.	.
Ring 2	6	5	7	8	12	11	15	16	.	.	.	.	.	.	.	.
Sequence 7																
Ring 1	1	2	4	3	9	10	14	13	.	.	.	.	.	.	.	.
Ring 2	6	5	7	8	12	11	15	16	.	.	.	.	.	.	.	.
Sequence 8																
Ring 1	2	1	4	3	10	9	14	13	.	.	.	.	.	.	.	.
Ring 2	6	5	7	8	12	11	15	16	.	.	.	.	.	.	.	.
Sequence 9																
Ring 1	1	2	3	4	9	10	13	14	.	.	.	.	.	.	.	.
Ring 2	5	6	8	7	11	12	16	15	.	.	.	.	.	.	.	.
Sequence 10																
Ring 1	2	1	3	4	10	9	13	14	.	.	.	.	.	.	.	.
Ring 2	5	6	8	7	11	12	16	15	.	.	.	.	.	.	.	.
Sequence 11																
Ring 1	1	2	4	3	9	10	14	13	.	.	.	.	.	.	.	.
Ring 2	5	6	8	7	11	12	16	15	.	.	.	.	.	.	.	.
Sequence 12																
Ring 1	2	1	4	3	10	9	14	13	.	.	.	.	.	.	.	.
Ring 2	5	6	8	7	11	12	16	15	.	.	.	.	.	.	.	.
Sequence 13																
Ring 1	1	2	3	4	9	10	13	14	.	.	.	.	.	.	.	.
Ring 2	6	5	8	7	12	11	16	15	.	.	.	.	.	.	.	.
Sequence 14																
Ring 1	2	1	3	4	10	9	13	14	.	.	.	.	.	.	.	.
Ring 2	6	5	8	7	12	11	16	15	.	.	.	.	.	.	.	.
Sequence 15																
Ring 1	1	2	4	3	9	10	14	13	.	.	.	.	.	.	.	.
Ring 2	6	5	8	7	12	11	16	15	.	.	.	.	.	.	.	.
Sequence 16																
Ring 1	2	1	4	3	10	9	14	13	.	.	.	.	.	.	.	.
Ring 2	6	5	8	7	12	11	16	15	.	.	.	.	.	.	.	.

Phase	1	2	3	4	5	6	7	8	9	10	11	12	13	14	15	16

Hardware Alternate Sequence Enable: No

Ontario, CA

"ECO NO LITE

C D M T R O L PRODUCTS, INC.

SoluLians LhaL Move the World™

Archibald Avenue @ Airport Drive - 10.211.54.61 - Cobalt - Econolite Type - Cobalt

Configuration Port 1 (SDLC)

Port 1 SDLC (MM) 1-4-1

BIU	1	2	3	4	5	6	7	8
Term & Facility								
Detector Rack								

Enable TS2/MMU Type Cabinet: No
Enable MMU Extended Status: No
Enable SDLC Stop Time: No
Enable 3 Critical RFE's Lockup: No

MMU Program (MM) 1-4-2

Channel Can Serve With Channel	
Channel 1	**Channel 2**

Color Check Enable (MM) 1-4-3

Enable Color Check: Yes

MMU/LS	1	2	3	4	5	6	7	8	9	10	11	12	13	14	15	16
Green																
Yellow																
Red																

Secondary Stations/Tests (MM) 1-4-4

ID	1	2	3	4	5	6	7	8	MMU
Term & Facility									

ID	1	2	3	4	5	6	7	8	Diag
Detector Rack									

Enable SDLC Diagnostic Test: No

Ontario, CA

"ECO NO LITE

C D M T R O L PRODUCTS, INC.

SoluLians LhaL Move the World™

Archibald Avenue @ Airport Drive - 10.211.54.61 - Cobalt - Econolite Type - Cobalt

Configuration Communications 1 (SDLC)

Ethernet Port Configuration (MM) 1-5-1

DHCP Enable:	No
Controller IP:	10.211.54.61
Subnet Mask:	255.255.255.0
Default Gateway IP:	10.211.54.1
Server IP:	10.10.5.227

NTCIP (MM) 1-5-5

NTCIP Backup Time (Sec):	0
NTCIP UDP Port:	501
Ethernet Priority:	1
Port 2 Priority (Port C50S for 2070):	4
Port 3A Priority (Port C21S for 2070):	3
Port 3B Priority (Port C22S for 2070):	2

Port Configuration (MM) 1-5-2 to 1-5-4

Port	2 (C50S)	3A (C21S)	3B (C22S)
Comm Module	None	Auto	Auto
Protocol	NTCIP	NTCIP	NTCIP
Enable	No	No	No
Data Rate (BPS)	9600	9600	9600
Data, Parity, Stop	8 N 1	8 N 1	8 N 1
Address	0	0	0
Telemetry Response Delay	0.0	0.0	0.0
Duplex - Half or Full	Half	Full	Full
Flow Control	No	Yes	Yes
Group Address	0	0	0
Single Flag Enable	Yes	Yes	Yes
RTS to CTS Delay	n/a	n/a	0.0
RTS Turn Off Delay	n/a	n/a	0.0
Dropout Time	10	10	10
Early RTS	n/a	n/a	No
Telemetry Mode	n/a	n/a	FSK
ATCS Railroad	0	n/a	n/a
ATCS Railroad Line	0	n/a	n/a
ATCS Group	0	n/a	n/a
Wayside Device	0	n/a	n/a
ATC Device	0	n/a	n/a
Wayside Subnode	0	n/a	n/a
ATC Subnode	0	n/a	n/a

ECPIP (MM) 1-5-6

Controller Address:	0
Expanded System Detector Address:	0

System Detector Assignment

System Detector	Local Detector

Wireless Configuration (MM) 1-5-7

Wireless Channel Number:	1
Wireless Access Code:	327423274

Ontario, CA

IECONOLITE
C D M T R O L PRODUCTS, INC.
Solutions that Move the World™

Archibald Avenue @ Airport Drive - 10.211.54.61 - Cobalt - Econolite Type - Cobalt

Configuration Logging / Display

Event Logging (MM) 1-6-1

Critical RFE's (MMU/TF)	Yes	3 Critical Errors Within 24 Hours	Yes
MMU Flash Faults	Yes	Local Flash Fault	Yes
Non-Critical RFE's (Det/Test)	Yes	Detector Errors	Yes
Coordination Errors	Yes	Controller Download	Yes
Preemption Events	Yes	TSP Events	Yes
Power On/Off	Yes	Low Battery	Yes
Access	Yes	Data Change	Yes
Online / Offline	Yes		

Alarm Event	1	2	3	4	5	6	7	8	9	10	11	12	13	14	15	16
Enable Logging	X	X	X	X	X	X	X	X	X	X	X	X	X	X	X	X

Display Options (MM) 1-7-2

Key Click Enable:	Yes
Switch to Graphics Mode:	No
LED Mode:	Auto
Display Mode:	Basic
Trans Mode Pop-Up Disable:	No

Sign On (MM) 8-5

Sign On Message Line 1: Solutions that Move the World
Sign On Message Line 2:

Software Modules (MM) 8-7

Application Version: 32.65.30
OS (Boot) Version: 06.07.00

Ontario, CA

IECONOLITE
C D M T R O L PRODUCTS, INC.
Solutions that Move the World™

Archibald Avenue @ Airport Drive - 10.211.54.61 - Cobalt - Econolite Type - Cobalt

Logic Processor Page 1

Logic Statement Control (MM) 1-8-1

Logic #	Statement Control

Ontario, CA

IECONOLITE
C D M T R O L PRODUCTS, INC.

Solutions that Move the World™

Archibald Avenue @ Airport Drive - 10.211.54.61 - Cobalt - Econolite Type - Cobalt

Logic Processor Page 2

Logic Statements (MM) 1-8-2

Ontario, CA

"ECO NO LITE

C D M T R O L PRODUCTS, INC.

SoluLians LhaL Move the World™

Archibald Avenue @ Airport Drive - 10.211.54.61 - Cobalt - Econolite Type - Cobalt

Controller Timing Plan (MM) 2-1

Plan 1 - ""

Phase	1	2	3	4	5	6	7	8	9	10	11	12	13	14	15	16
Direction	N-L	S-T	E-L	W-T	S-L	N-T	W-L	E-T	N	N	N	N	N	N	N	N
Min Green	10	10	10	10	10	10	10	10	5	5	5	5	5	5	5	5
Bk Min Green	10	10	10	10	10	10	10	10	0	0	0	0	0	0	0	0
CS Min Green	0	0	0	0	0	0	0	0	0	0	0	0	0	0	0	0
Delay Green	0	0	0	0	0	0	0	0	0	0	0	0	0	0	0	0
Walk	0	0	0	4	0	4	0	0	0	10	0	10	0	10	0	10
Walk2	0	0	0	0	0	0	0	0	0	0	0	0	0	0	0	0
Walk Max	0	0	0	0	0	0	0	0	0	0	0	0	0	0	0	0
Ped Clear	0	0	0	39	0	38	0	0	0	16	0	16	0	16	0	16
Ped Clear 2	0	0	0	0	0	0	0	0	0	0	0	0	0	0	0	0
Ped Clear Max	0	0	0	0	0	0	0	0	0	0	0	0	0	0	0	0
Ped CO	0	0	0	0	0	0	0	0	0	0	0	0	0	0	0	0
Vehicle Ext	2.0	2.5	2.0	2.5	2.0	2.5	2.0	2.5	5.0	5.0	5.0	5.0	5.0	5.0	5.0	5.0
Vehicle Ext 2	0.0	0.0	0.0	0.0	0.0	0.0	0.0	0.0	0.0	0.0	0.0	0.0	0.0	0.0	0.0	0.0
Max1	20	35	20	35	20	35	20	35	35	35	35	35	35	35	35	35
Max2	40	40	40	40	40	40	40	40	40	40	40	40	40	40	40	40
Max3	0	0	0	0	0	0	0	0	0	0	0	0	0	0	0	0
DYM Max	0	0	0	0	0	0	0	0	0	0	0	0	0	0	0	0
Dym Step	0.0	0.0	0.0	0.0	0.0	0.0	0.0	0.0	0.0	0.0	0.0	0.0	0.0	0.0	0.0	0.0
Yellow	5.5	5.5	5.0	5.0	5.5	5.5	5.0	5.0	3.0	3.0	3.0	3.0	3.0	3.0	3.0	3.0
Red Clear	2.0	2.0	2.0	2.0	2.0	2.0	2.0	2.0	1.0	1.0	1.0	1.0	1.0	1.0	1.0	1.0
Red Max	0.0	0.0	0.0	0.0	0.0	0.0	0.0	0.0	0.0	0.0	0.0	0.0	0.0	0.0	0.0	0.0
Red Revert	2.0	2.0	2.0	2.0	2.0	2.0	2.0	2.0	2.0	2.0	2.0	2.0	2.0	2.0	2.0	2.0
Act B4	0	0	0	0	0	0	0	0	0	0	0	0	0	0	0	0
Sec/Act	0.0	0.0	0.0	0.0	0.0	0.0	0.0	0.0	0.0	0.0	0.0	0.0	0.0	0.0	0.0	0.0
Max Int	0	0	0	0	0	0	0	0	0	0	0	0	0	0	0	0
Time B4	0	0	0	0	0	0	0	0	0	0	0	0	0	0	0	0
Cars Wt	0	0	0	0	0	0	0	0	0	0	0	0	0	0	0	0
STPTDuc	0.0	0.0	0.0	0.0	0.0	0.0	0.0	0.0	0.0	0.0	0.0	0.0	0.0	0.0	0.0	0.0
TTReduc	0	0	0	0	0	0	0	0	0	0	0	0	0	0	0	0
Min Gap	0.0	0.0	0.0	0.0	0.0	0.0	0.0	0.0	0.0	0.0	0.0	0.0	0.0	0.0	0.0	0.0

Plan 2 - ""

Phase	1	2	3	4	5	6	7	8	9	10	11	12	13	14	15	16
Direction	N-L	S-T	E-L	W-T	S-L	N-T	W-L	E-T	N	N	N	N	N	N	N	N
Min Green	5	5	5	5	5	5	5	5	5	5	5	5	5	5	5	5
Bk Min Green	0	0	0	0	0	0	0	0	0	0	0	0	0	0	0	0
CS Min Green	0	0	0	0	0	0	0	0	0	0	0	0	0	0	0	0
Delay Green	0	0	0	0	0	0	0	0	0	0	0	0	0	0	0	0
Walk	0	10	0	10	0	10	0	10	0	10	0	10	0	10	0	10
Walk2	0	0	0	0	0	0	0	0	0	0	0	0	0	0	0	0
Walk Max	0	0	0	0	0	0	0	0	0	0	0	0	0	0	0	0
Ped Clear	0	16	0	16	0	16	0	16	0	16	0	16	0	16	0	16
Ped Clear 2	0	0	0	0	0	0	0	0	0	0	0	0	0	0	0	0
Ped Clear Max	0	0	0	0	0	0	0	0	0	0	0	0	0	0	0	0
Ped CO	0	0	0	0	0	0	0	0	0	0	0	0	0	0	0	0
Vehicle Ext	5.0	5.0	5.0	5.0	5.0	5.0	5.0	5.0	5.0	5.0	5.0	5.0	5.0	5.0	5.0	5.0
Vehicle Ext 2	0.0	0.0	0.0	0.0	0.0	0.0	0.0	0.0	0.0	0.0	0.0	0.0	0.0	0.0	0.0	0.0
Max1	35	35	35	35	35	35	35	35	35	35	35	35	35	35	35	35
Max2	40	40	40	40	40	40	40	40	40	40	40	40	40	40	40	40
Max3	0	0	0	0	0	0	0	0	0	0	0	0	0	0	0	0

DYM Max	0	0	0	0	0	0	0	0	0	0	0	0	0	0	0	0
Dym Step	0.0	0.0	0.0	0.0	0.0	0.0	0.0	0.0	0.0	0.0	0.0	0.0	0.0	0.0	0.0	0.0
Yellow	3.0	3.0	3.0	3.0	3.0	3.0	3.0	3.0	3.0	3.0	3.0	3.0	3.0	3.0	3.0	3.0
Red Clear	1.0	1.0	1.0	1.0	1.0	1.0	1.0	1.0	1.0	1.0	1.0	1.0	1.0	1.0	1.0	1.0
Red Max	0.0	0.0	0.0	0.0	0.0	0.0	0.0	0.0	0.0	0.0	0.0	0.0	0.0	0.0	0.0	0.0
Red Revert	2.0	2.0	2.0	2.0	2.0	2.0	2.0	2.0	2.0	2.0	2.0	2.0	2.0	2.0	2.0	2.0
Act B4	0	0	0	0	0	0	0	0	0	0	0	0	0	0	0	0
Sec/Act	0.0	0.0	0.0	0.0	0.0	0.0	0.0	0.0	0.0	0.0	0.0	0.0	0.0	0.0	0.0	0.0
Max Int	0	0	0	0	0	0	0	0	0	0	0	0	0	0	0	0
Time B4	0	0	0	0	0	0	0	0	0	0	0	0	0	0	0	0
Cars Wt	0	0	0	0	0	0	0	0	0	0	0	0	0	0	0	0
STPTDuc	0.0	0.0	0.0	0.0	0.0	0.0	0.0	0.0	0.0	0.0	0.0	0.0	0.0	0.0	0.0	0.0
TTReduc	0	0	0	0	0	0	0	0	0	0	0	0	0	0	0	0
Min Gap	0.0	0.0	0.0	0.0	0.0	0.0	0.0	0.0	0.0	0.0	0.0	0.0	0.0	0.0	0.0	0.0

Plan 3 - ""

Phase	1	2	3	4	5	6	7	8	9	10	11	12	13	14	15	16
Direction	N-L	S-T	E-L	W-T	S-L	N-T	W-L	E-T	N	N	N	N	N	N	N	N
Min Green	5	5	5	5	5	5	5	5	5	5	5	5	5	5	5	5
Bk Min Green	0	0	0	0	0	0	0	0	0	0	0	0	0	0	0	0
CS Min Green	0	0	0	0	0	0	0	0	0	0	0	0	0	0	0	0
Delay Green	0	0	0	0	0	0	0	0	0	0	0	0	0	0	0	0
Walk	0	10	0	10	0	10	0	10	0	10	0	10	0	10	0	10
Walk2	0	0	0	0	0	0	0	0	0	0	0	0	0	0	0	0
Walk Max	0	0	0	0	0	0	0	0	0	0	0	0	0	0	0	0
Ped Clear	0	16	0	16	0	16	0	16	0	16	0	16	0	16	0	16
Ped Clear 2	0	0	0	0	0	0	0	0	0	0	0	0	0	0	0	0
Ped Clear Max	0	0	0	0	0	0	0	0	0	0	0	0	0	0	0	0
Ped CO	0	0	0	0	0	0	0	0	0	0	0	0	0	0	0	0
Vehicle Ext	5.0	5.0	5.0	5.0	5.0	5.0	5.0	5.0	5.0	5.0	5.0	5.0	5.0	5.0	5.0	5.0
Vehicle Ext 2	0.0	0.0	0.0	0.0	0.0	0.0	0.0	0.0	0.0	0.0	0.0	0.0	0.0	0.0	0.0	0.0
Max1	35	35	35	35	35	35	35	35	35	35	35	35	35	35	35	35
Max2	40	40	40	40	40	40	40	40	40	40	40	40	40	40	40	40
Max3	0	0	0	0	0	0	0	0	0	0	0	0	0	0	0	0
DYM Max	0	0	0	0	0	0	0	0	0	0	0	0	0	0	0	0
Dym Step	0.0	0.0	0.0	0.0	0.0	0.0	0.0	0.0	0.0	0.0	0.0	0.0	0.0	0.0	0.0	0.0
Yellow	3.0	3.0	3.0	3.0	3.0	3.0	3.0	3.0	3.0	3.0	3.0	3.0	3.0	3.0	3.0	3.0
Red Clear	1.0	1.0	1.0	1.0	1.0	1.0	1.0	1.0	1.0	1.0	1.0	1.0	1.0	1.0	1.0	1.0
Red Max	0.0	0.0	0.0	0.0	0.0	0.0	0.0	0.0	0.0	0.0	0.0	0.0	0.0	0.0	0.0	0.0
Red Revert	2.0	2.0	2.0	2.0	2.0	2.0	2.0	2.0	2.0	2.0	2.0	2.0	2.0	2.0	2.0	2.0
Act B4	0	0	0	0	0	0	0	0	0	0	0	0	0	0	0	0
Sec/Act	0.0	0.0	0.0	0.0	0.0	0.0	0.0	0.0	0.0	0.0	0.0	0.0	0.0	0.0	0.0	0.0
Max Int	0	0	0	0	0	0	0	0	0	0	0	0	0	0	0	0
Time B4	0	0	0	0	0	0	0	0	0	0	0	0	0	0	0	0
Cars Wt	0	0	0	0	0	0	0	0	0	0	0	0	0	0	0	0
STPTDuc	0.0	0.0	0.0	0.0	0.0	0.0	0.0	0.0	0.0	0.0	0.0	0.0	0.0	0.0	0.0	0.0
TTReduc	0	0	0	0	0	0	0	0	0	0	0	0	0	0	0	0
Min Gap	0.0	0.0	0.0	0.0	0.0	0.0	0.0	0.0	0.0	0.0	0.0	0.0	0.0	0.0	0.0	0.0

Plan 4 - ""

Phase	1	2	3	4	5	6	7	8	9	10	11	12	13	14	15	16
Direction	N-L	S-T	E-L	W-T	S-L	N-T	W-L	E-T	N	N	N	N	N	N	N	N
Min Green	5	5	5	5	5	5	5	5	5	5	5	5	5	5	5	5
Bk Min Green	0	0	0	0	0	0	0	0	0	0	0	0	0	0	0	0
CS Min Green	0	0	0	0	0	0	0	0	0	0	0	0	0	0	0	0
Delay Green	0	0	0	0	0	0	0	0	0	0	0	0	0	0	0	0
Walk	0	10	0	10	0	10	0	10	0	10	0	10	0	10	0	10
Walk2	0	0	0	0	0	0	0	0	0	0	0	0	0	0	0	0
Walk Max	0	0	0	0	0	0	0	0	0	0	0	0	0	0	0	0
Ped Clear	0	16	0	16	0	16	0	16	0	16	0	16	0	16	0	16
Ped Clear 2	0	0	0	0	0	0	0	0	0	0	0	0	0	0	0	0
Ped Clear Max	0	0	0	0	0	0	0	0	0	0	0	0	0	0	0	0
Ped CO	0	0	0	0	0	0	0	0	0	0	0	0	0	0	0	0
Vehicle Ext	5.0	5.0	5.0	5.0	5.0	5.0	5.0	5.0	5.0	5.0	5.0	5.0	5.0	5.0	5.0	5.0
Vehicle Ext 2	0.0	0.0	0.0	0.0	0.0	0.0	0.0	0.0	0.0	0.0	0.0	0.0	0.0	0.0	0.0	0.0
Max1	35	35	35	35	35	35	35	35	35	35	35	35	35	35	35	35
Max2	40	40	40	40	40	40	40	40	40	40	40	40	40	40	40	40
Max3	0	0	0	0	0	0	0	0	0	0	0	0	0	0	0	0
DYM Max	0	0	0	0	0	0	0	0	0	0	0	0	0	0	0	0
Dym Step	0.0	0.0	0.0	0.0	0.0	0.0	0.0	0.0	0.0	0.0	0.0	0.0	0.0	0.0	0.0	0.0
Yellow	3.0	3.0	3.0	3.0	3.0	3.0	3.0	3.0	3.0	3.0	3.0	3.0	3.0	3.0	3.0	3.0
Red Clear	1.0	1.0	1.0	1.0	1.0	1.0	1.0	1.0	1.0	1.0	1.0	1.0	1.0	1.0	1.0	1.0
Red Max	0.0	0.0	0.0	0.0	0.0	0.0	0.0	0.0	0.0	0.0	0.0	0.0	0.0	0.0	0.0	0.0
Red Revert	2.0	2.0	2.0	2.0	2.0	2.0	2.0	2.0	2.0	2.0	2.0	2.0	2.0	2.0	2.0	2.0
Act B4	0	0	0	0	0	0	0	0	0	0	0	0	0	0	0	0
Sec/Act	0.0	0.0	0.0	0.0	0.0	0.0	0.0	0.0	0.0	0.0	0.0	0.0	0.0	0.0	0.0	0.0
Max Int	0	0	0	0	0	0	0	0	0	0	0	0	0	0	0	0
Time B4	0	0	0	0	0	0	0	0	0	0	0	0	0	0	0	0
Cars Wt	0	0	0	0	0	0	0	0	0	0	0	0	0	0	0	0

STPTDuc	0.0	0.0	0.0	0.0	0.0	0.0	0.0	0.0	0.0	0.0	0.0	0.0	0.0	0.0	0.0	0.0
TTReduc	0	0	0	0	0	0	0	0	0	0	0	0	0	0	0	0
Min Gap	0.0	0.0	0.0	0.0	0.0	0.0	0.0	0.0	0.0	0.0	0.0	0.0	0.0	0.0	0.0	0.0

Ontario, CA

"ECO NO LITE

C D M T R O L PRODUCTS, INC.

SoluLians LhaL Move the World™

Archibald Avenue @ Airport Drive - 10.211.54.61 - Cobalt - Econolite Type - Cobalt

Controller Overlaps

Vehicle Overlaps (MM) 2-2

Overlap	Type	Lag Green	Yellow	Red	Adv. Green

Phases

Overlap	Phase	Included	Protect	Ped Protect	Not Overlap	Modifier	Lag X Phases	Lag 2 Phases	Flash Green

PPLT FYA

Overlap	Protected Phase (Left Turn)	Permissive Phase (Opposing Thru)	Flashing Arrow Output	Flashing Arrow Output CH	Delay Start of FYA	Delay Start of Clearance	Action Plan SF Bit Disable	Ped Protected Enable

Guaranteed Minimum Time Data (MM) 2-4

Phase	Min Green	Walk	Ped Clear	Yellow	Red Clear	Overlap Green
A01	5	0	7	3.0	0.0	5
B02	5	0	7	3.0	0.0	5
C03	5	0	7	3.0	0.0	5
D04	5	0	7	3.0	0.0	5
E05	5	0	7	3.0	0.0	5
F06	5	0	7	3.0	0.0	5
G07	5	0	7	3.0	0.0	5
H08	5	0	7	3.0	0.0	5
I09	5	0	7	3.0	0.0	5
J10	5	0	7	3.0	0.0	5
K11	5	0	7	3.0	0.0	5
L12	5	0	7	3.0	0.0	5
M13	5	0	7	3.0	0.0	5
N14	5	0	7	3.0	0.0	5
O15	5	0	7	3.0	0.0	5
P16	5	0	7	3.0	0.0	5

Ontario, CA

IECONOLITE
C D M T R O L PRODUCTS, INC.
Solutions that Move the World™

Archibald Avenue @ Airport Drive - 10.211.54.61 - Cobalt - Econolite Type - Cobalt

Controller Pedestrian Overlaps
Vehicle / Pedestrian Overlaps (MM) 2-3

Included	Pedestrian Overlaps

Ontario, CA

IECONOLITE
C D M T R O L PRODUCTS, INC.
Solutions that Move the World™

Archibald Avenue @ Airport Drive - 10.211.54.61 - Cobalt - Econolite Type - Cobalt

Controller Start / Flash Data (MM) 2-5

Start Up

Phase	Phase Setting
1	.
2	Y
3	.
4	.
5	.
6	Y
7	.
8	.
9	.
10	.
11	.
12	.
13	.
14	.
15	.
16	.

Overlap
A
B
C
D

Flash Thru Mon: No
Flash Time: 0
All Red: 6
Power Start Seq: 1
MUTCD Enabled: No
Y->G: n/a

Automatic Flash

Entry
2
6

Exit
2
6

Overlap Exit
A
B
C
D

Flash Thru Mon: No
Exit Flash: W
Minimum Flash: 8
Mimimum Recall: No

Cycle Through Phase: No

Ontario, CA

"ECO NO LITE

C D M T R O L PRODUCTS, INC.

SoluLians LhaL Move the World™

Archibald Avenue @ Airport Drive - 10.211.54.61 - Cobalt - Econolite Type - Cobalt

Controller Options

Controller Options (MM) 2-6-1

Phase	1	2	3	4	5	6	7	8	9	10	11	12	13	14	15	16
Flashing Grn Ph	.	.	.	.	.	.	.	.	.	.	.	.	.	.	.	.
Guar Passage																
Non-Act I		X				X										
Non-Act II				X				X								
Dual Entry		X		X		X		X								
Cond Service																
Cond Reservice																
Ped Re-Service																
Rest In Walk																
Flashing Walk																
Ped Clr-Yel																
Ped Clr-Red																
IGRN + Veh Ext																

Ped Clear Protect: Off Unit Red Revert: 2.0 MUTCD 3 Seconds Don't Walk: No

Pre-Timed Mode (MM) 2-7

Enable Pre-Timed Mode: No Free Input Disables Pre-Timed: No

Phase	1	2	3	4	5	6	7	8	9	10	11	12	13	14	15	16
Pre-Timed																

Phase Recall Options (MM) 2-8

Plan # 1

	1	2	3	4	5	6	7	8	9	10	11	12	13	14	15	16
Lock Detector																
Vehicle Recall				X				X								
Ped Recall																
Max Recall																
Soft Recall																
No Rest																
AI Calc																

Ontario, CA

IECONOLITE
C D M T R O L PRODUCTS, INC.
Solutions that Move the World™

Archibald Avenue @ Airport Drive - 10.211.54.61 - Cobalt - Econolite Type - Cobalt

Coordination Options

Options (MM) 3-1

Manual Pattern	Auto	ECPI Coord	Yes
System Source	TBC	System Format	STD
Splits In	Seconds	Offsets In	Seconds
Transition	Smooth	Max Select	MAXINH
Dwell / Add Time	0		
Delay Coord Wk-LZ	No	Force Off	Float
Offset Reference	Lead	Use Ped Time	Yes
Ped Recall	No	Ped Reservice	No
Local Zero Override	No	FO Added Ini Green	No
Re-sync Count	0	Multisync	No

Auto Perm Minimum Green (Seconds) (MM) 3-4

Phase	1	2	3	4	5	6	7	8	9	10	11	12	13	14	15	16
Minimum Green	0	0	0	0	0	0	0	0	0	0	0	0	0	0	0	0

Split Demand (MM) 3-5

Phase	1	2	3	4	5	6	7	8	9	10	11	12	13	14	15	16
Demand 1																
Demand 2																

Demand	1	2
Detector	0	0
Call Time (Sec)	0	0
Cycle Count	0	0

Ontario, CA

IECONOLITE
C D M T R O L PRODUCTS, INC.

Solutions that Move the World™

Archibald Avenue @ Airport Drive - 10.211.54.61 - Cobalt - Econolite Type - Cobalt

Coordination Pattern Data
Coordinator Pattern Data (MM) 3-2

Ontario, CA

IECONOLITE
C D M T R O L PRODUCTS, INC.

Solutions that Move the World™

Archibald Avenue @ Airport Drive - 10.211.54.61 - Cobalt - Econolite Type - Cobalt

Coordination **Split Pattern**
Split Pattern Data (MM) 3-3

Ontario, CA

"ECO NO LITE
CONTROL PRODUCTS, INC.
Solutions that Move the World™

Archibald Avenue @ Airport Drive - 10.211.54.61 - Cobalt - Econolite Type - Cobalt

Preempt Plan

Preempt Plan (MM) 4-1

Preempt Plan 3

Phase	1	2	3	4	5	6	7	8	9	10	11	12	13	14	15	16
Overlap	A	B	C	D	E	F	G	H	I	J	K	L	M	N	O	P
Trk Clr Veh	.	.	.	.	.	.	.	.	.	.	.	.	.	.	.	.
Trk Clr Overlap	.	.	.	.	.	.	.	.	.	.	.	.	.	.	.	.
Enable Trailing																
Dwell Veh	.	X	.	.	X	.	.	.	.	.	.	.	.	.	.	.
Dwell Ped																
Dwell Overlap	.	.	.	.	.	.	.	.	.	.	.	.	.	.	.	.
Cycling Veh	.	.	.	.	.	.	.	.	.	.	.	.	.	.	.	.
Cycling Ped																
Cycling Overlap	.	.	.	.	.	.	.	.	.	.	.	.	.	.	.	.
Exit Phases																
Exit Calls																
Special Function																

Enable	Yes	Preempt Override	Yes	Interlock Enable	No
Det Lock	Yes	Delay	0	Inhibit	0
Override Flash	Yes	Duration	0	CLR > GRN	No
Term Ovlp Asap	No	PC Through Yel	No	Terminate Phase	No
Ped Dark	No	Track Clear Rsrv	No	Dwell Flash	Off
Linked Pmt	0	FL Exit Color	Grn	Exit Options	Off
Exit Timing Plan	0	Reservice	0	Fault Type	Hard

Ring	1	2	3	4
Free During Pmt	No	No	No	No

Timing	Walk	Ped Clr	Min Grn	Yellow	Red
Entrance	0	255	5	4.0	1.0
	Min Grn	Ext Grn	Max Grn	Yellow	Red
Track Clear	0	0	0	4.0	1.0
	Min Dwell	Pmt Ext	Max Time	Yellow	Red
Dwell / Cycle-Exit	0	0.0	0	4.0	1.0

Preemption Active Out	On	Preempt Act Dwell	No
Other - Priority Preempt	Off	Non-Priority Pmt	Off
Inhibit Extension Time	0.0	Ped Priority Return	Off
Veh Priority Return	Off	Queue Delay	Off
Conditional Delay	Off		

Phase	1	2	3	4	5	6	7	8	9	10	11	12	13	14	15	16
Veh Pri Return %	0	0	0	0	0	0	0	0	0	0	0	0	0	0	0	0

Preempt Plan 4

Phase	1	2	3	4	5	6	7	8	9	10	11	12	13	14	15	16
Overlap	A	B	C	D	E	F	G	H	I	J	K	L	M	N	O	P
Trk Clr Veh	.	.	.	.	.	.	.	.	.	.	.	.	.	.	.	.
Trk Clr Overlap	.	.	.	.	.	.	.	.	.	.	.	.	.	.	.	.
Enable Trailing																
Dwell Veh	X	.	.	.	.	X	.	.	.	.	.	.	.	.	.	.
Dwell Ped																
Dwell Overlap	.	.	.	.	.	.	.	.	.	.	.	.	.	.	.	.
Cycling Veh	.	.	.	.	.	.	.	.	.	.	.	.	.	.	.	.
Cycling Ped																
Cycling Overlap	.	.	.	.	.	.	.	.	.	.	.	.	.	.	.	.
Exit Phases																
Exit Calls																
Special Function																

Enable	Yes	Preempt Override	Yes	Interlock Enable	No
Det Lock	Yes	Delay	0	Inhibit	0
Override Flash	Yes	Duration	0	CLR > GRN	No
Term Ovlp Asap	No	PC Through Yel	No	Terminate Phase	No
Ped Dark	No	Track Clear Rsrv	No	Dwell Flash	Off
Linked Pmt	0	FL Exit Color	Grn	Exit Options	Off
Exit Timing Plan	0	Reservice	0	Fault Type	Hard

Ring	1	2	3	4
Free During Pmt	No	No	No	No

Timing	Walk	Ped Clr	Min Grn	Yellow	Red
Entrance	0	255	5	4.0	1.0
	Min Grn	**Ext Grn**	**Max Grn**	**Yellow**	**Red**
Track Clear	0	0	0	4.0	1.0
	Min Dwell	**Pmt Ext**	**Max Time**	**Yellow**	**Red**
Dwell / Cycle-Exit	0	0.0	0	4.0	1.0

Preemption Active Out	On	Preempt Act Dwell	No
Other - Priority Preempt	Off	Non-Priority Pmt	Off
Inhibit Extension Time	0.0	Ped Priority Return	Off
Veh Priority Return	Off	Queue Delay	Off
Conditional Delay	Off		

Phase	1	2	3	4	5	6	7	8	9	10	11	12	13	14	15	16
Veh Pri Return %	0	0	0	0	0	0	0	0	0	0	0	0	0	0	0	0

Preempt Plan 5

Phase	1	2	3	4	5	6	7	8	9	10	11	12	13	14	15	16
Overlap	A	B	C	D	E	F	G	H	I	J	K	L	M	N	O	P
Trk Clr Veh	.	.	.	.	.	.	.	.	.	.	.	.	.	.	.	.
Trk Clr Overlap	.	.	.	.	.	.	.	.	.	.	.	.	.	.	.	.
Enable Trailing																
Dwell Veh	.	.	.	X	.	.	X	.	.	.	.	.	.	.	.	.
Dwell Ped																
Dwell Overlap	.	.	.	.	.	.	.	.	.	.	.	.	.	.	.	.
Cycling Veh	.	.	.	.	.	.	.	.	.	.	.	.	.	.	.	.
Cycling Ped																
Cycling Overlap	.	.	.	.	.	.	.	.	.	.	.	.	.	.	.	.
Exit Phases																
Exit Calls																
Special Function																

Enable	Yes	Preempt Override	Yes	Interlock Enable	No
Det Lock	Yes	Delay	0	Inhibit	0
Override Flash	Yes	Duration	0	CLR > GRN	No
Term Ovlp Asap	No	PC Through Yel	No	Terminate Phase	No
Ped Dark	No	Track Clear Rsrv	No	Dwell Flash	Off
Linked Pmt	0	FL Exit Color	Grn	Exit Options	Off
Exit Timing Plan	0	Reservice	0	Fault Type	Hard

Ring	1	2	3	4
Free During Pmt	No	No	No	No

Timing	Walk	Ped Clr	Min Grn	Yellow	Red
Entrance	0	255	5	4.0	1.0
	Min Grn	**Ext Grn**	**Max Grn**	**Yellow**	**Red**
Track Clear	0	0	0	4.0	1.0
	Min Dwell	**Pmt Ext**	**Max Time**	**Yellow**	**Red**
Dwell / Cycle-Exit	0	0.0	0	4.0	1.0

Preemption Active Out	On	Preempt Act Dwell	No
Other - Priority Preempt	Off	Non-Priority Pmt	Off
Inhibit Extension Time	0.0	Ped Priority Return	Off
Veh Priority Return	Off	Queue Delay	Off
Conditional Delay	Off		

Phase	1	2	3	4	5	6	7	8	9	10	11	12	13	14	15	16
Veh Pri Return %	0	0	0	0	0	0	0	0	0	0	0	0	0	0	0	0

Preempt Plan 6

Phase	1	2	3	4	5	6	7	8	9	10	11	12	13	14	15	16
Overlap	A	B	C	D	E	F	G	H	I	J	K	L	M	N	O	P
Trk Clr Veh	.	.	.	.	.	.	.	.	.	.	.	.	.	.	.	.
Trk Clr Overlap	.	.	.	.	.	.	.	.	.	.	.	.	.	.	.	.
Enable Trailing																
Dwell Veh	.	.	X	.	.	.	.	X	.	.	.	.	.	.	.	.
Dwell Ped																
Dwell Overlap	.	.	.	.	.	.	.	.	.	.	.	.	.	.	.	.
Cycling Veh	.	.	.	.	.	.	.	.	.	.	.	.	.	.	.	.
Cycling Ped																
Cycling Overlap	.	.	.	.	.	.	.	.	.	.	.	.	.	.	.	.
Exit Phases																
Exit Calls																
Special Function																

Enable	Yes	Preempt Override	Yes	Interlock Enable	No
Det Lock	Yes	Delay	0	Inhibit	0
Override Flash	Yes	Duration	0	CLR > GRN	No
Term Ovlp Asap	No	PC Through Yel	No	Terminate Phase	No
Ped Dark	No	Track Clear Rsrv	No	Dwell Flash	Off
Linked Pmt	0	FL Exit Color	Grn	Exit Options	Off
Exit Timing Plan	0	Reservice	0	Fault Type	Hard

Ring	1	2	3	4
Free During Pmt	No	No	No	No

Timing	Walk	Ped Clr	Min Grn	Yellow	Red
Entrance	0	255	5	4.0	1.0
	Min Grn	**Ext Grn**	**Max Grn**	**Yellow**	**Red**
Track Clear	0	0	0	4.0	1.0
	Min Dwell	**Pmt Ext**	**Max Time**	**Yellow**	**Red**
Dwell / Cycle-Exit	0	0.0	0	4.0	1.0

Preemption Active Out	On	Preempt Act Dwell	No
Other - Priority Preempt	Off	Non-Priority Pmt	Off
Inhibit Extension Time	0.0	Ped Priority Return	Off
Veh Priority Return	Off	Queue Delay	Off
Conditional Delay	Off		

Phase	1	2	3	4	5	6	7	8	9	10	11	12	13	14	15	16
Veh Pri Return %	0	0	0	0	0	0	0	0	0	0	0	0	0	0	0	0

Ontario, CA

IECONOLITE
C D M T R O L PRODUCTS, INC.
Solutions that Move the World™

Archibald Avenue @ Airport Drive - 10.211.54.61 - Cobalt - Econolite Type - Cobalt

Preempt Preempt Filtering
Enable Preempt Filtering & TSP/SCP (MM) 4-2

Input	Solid	Pulsing
1	...BYPASSED...	...BYPASSED...
2	...BYPASSED...	...BYPASSED...
3	PREEMPTION 3	PREEMPTION 7
4	PREEMPTION 4	PREEMPTION 8
5	PREEMPTION 5	PREEMPTION 9
6	PREEMPTION 6	PREEMPTION 10
7	...BYPASSED...	...BYPASSED...
8	...BYPASSED...	...BYPASSED...
9	...BYPASSED...	...BYPASSED...
10	...BYPASSED...	...BYPASSED...

Ontario, CA

"ECO NO LITE
C D M T R O L PRODUCTS, INC.
SoluLians LhaL Move the World™

Archibald Avenue @ Airport Drive - 10.211.54.61 - Cobalt - Econolite Type - Cobalt

Preempt TSP/SCP Plan and Split

TSP / SCP Plan (MM) 4-3

TSP/SCP Plan	Enable Option	Signal Type	Det Lock	Delay Time	Max Presence	PMT Enables Reservice	No Delay in TSP	Action SF Inhibit	Reservice Cycles	Bus Heading
1	No	Solid	No	0	0	No	False	0	0	NB
2	No	Solid	No	0	0	No	False	0	0	SB
3	No	Solid	No	0	0	No	False	0	0	EB
4	No	Solid	No	0	0	No	False	0	0	WB
5	No	Solid	No	0	0	No	False	0	0	.
6	No	Solid	No	0	0	No	False	0	0	.

Mode: TSP
Free Default Pattern: 120
Headway Allowance: 0

TSP/SCP Plan	1	2	3	4	5	6	7	8	9	10	11	12	13	14	15	16
1	.	.	.	.	.	.	.	.	.	.	.	.	.	.	.	.
2	.	.	.	.	.	.	.	.	.	.	.	.	.	.	.	.
3	.	.	.	.	.	.	.	.	.	.	.	.	.	.	.	.
4	.	.	.	.	.	.	.	.	.	.	.	.	.	.	.	.
5	.	.	.	.	.	.	.	.	.	.	.	.	.	.	.	.
6	.	.	.	.	.	.	.	.	.	.	.	.	.	.	.	.

TSP / SCP Split Pattern (MM) 4-4

TSP/SCP Split Pattern	Max Type	Phase															
		1	2	3	4	5	6	7	8	9	10	11	12	13	14	15	16
4	Max Reduction	255	255	255	255	255	255	255	255	255	255	255	255	255	255	255	255

Ontario, CA

IECONOLITE
C D M T R O L PRODUCTS, INC.
Solutions that Move the World™

Archibald Avenue @ Airport Drive - 10.211.54.61 - Cobalt - Econolite Type - Cobalt

Time Base Clock/Calendar
Clock/Calendar Data (MM) 5-1

Manual Action Plan:	0
SYNC Reference Time:	00:00
SYNC Reference:	Reference Time
Day Light Savings:	No
Time Reset Input Set Time:	3:30:00
Standard Time From GMT:	0

Ontario, CA

IECONOLITE
C D M T R O L PRODUCTS, INC.
Solutions that Move the World™

Archibald Avenue @ Airport Drive - 10.211.54.61 - Cobalt - Econolite Type - Cobalt

Time Base Action Plan
Action Plan (MM) 5-2

Ontario, CA

IECONOLITE
C D M T R O L PRODUCTS, INC.
Solutions that Move the World™

Archibald Avenue @ Airport Drive - 10.211.54.61 - Cobalt - Econolite Type - Cobalt

Time Base Day Plan/Schedule
Day Plan (MM) 5-3

Schedule (MM) 5-4

Ontario, CA

IECONOLITE
C D M T R O L PRODUCTS, INC.
Solutions that Move the World™

Archibald Avenue @ Airport Drive - 10.211.54.61 - Cobalt - Econolite Type - Cobalt

Time Base Exceptions
Exception Day Program (MM) 5-5

Excep Day	Float/Fixed	Mon/Mon	DOW/DOM	WOM/Year	Day Plan

Ontario, CA

"ECO NO LITE
C D M T R O L PRODUCTS, INC.
Solutions that Move the World™

Archibald Avenue @ Airport Drive - 10.211.54.61 - Cobalt - Econolite Type - Cobalt

Detectors

Detectors - Pg 1

Veh Det Phase Assignment (MM) 6-1

Vehicle Detector Plan Number - 1

Veh Detector	Called Phase	Type

Vehicle Detector Plan Number - 2

Veh Detector	Called Phase	Type

Vehicle Detector Plan Number - 3

Veh Detector	Called Phase	Type

Vehicle Detector Plan Number - 4

Veh Detector	Called Phase	Type

Vehicle Detector Setup (MM) 6-2

Veh Detector	Type	TS2 Detector	Description
1	S-STANDARD	Yes	
2	S-STANDARD	Yes	
3	S-STANDARD	Yes	
4	S-STANDARD	Yes	
5	S-STANDARD	Yes	
6	S-STANDARD	Yes	
7	S-STANDARD	Yes	
8	S-STANDARD	Yes	
9	S-STANDARD	Yes	
10	S-STANDARD	Yes	
11	S-STANDARD	Yes	
12	S-STANDARD	Yes	
13	S-STANDARD	Yes	
14	S-STANDARD	Yes	
15	S-STANDARD	Yes	
16	S-STANDARD	Yes	
17	S-STANDARD	Yes	
18	S-STANDARD	Yes	
19	S-STANDARD	Yes	
20	D-DISCONNECT	Yes	
21	S-STANDARD	Yes	
22	S-STANDARD	Yes	
23	S-STANDARD	Yes	
24	S-STANDARD	Yes	
25	S-STANDARD	Yes	
26	S-STANDARD	Yes	
27	S-STANDARD	Yes	
28	S-STANDARD	Yes	
29	S-STANDARD	Yes	
30	S-STANDARD	Yes	
31	S-STANDARD	Yes	
32	S-STANDARD	Yes	
33	S-STANDARD	Yes	
34	S-STANDARD	Yes	

35	S-STANDARD	Yes	
36	S-STANDARD	Yes	
37	S-STANDARD	Yes	
38	S-STANDARD	Yes	
39	S-STANDARD	Yes	
40	S-STANDARD	Yes	
41	S-STANDARD	Yes	
42	S-STANDARD	Yes	
43	S-STANDARD	Yes	
44	S-STANDARD	Yes	
45	S-STANDARD	Yes	
46	S-STANDARD	Yes	
47	S-STANDARD	Yes	
48	S-STANDARD	Yes	
49	S-STANDARD	Yes	
50	S-STANDARD	Yes	
51	S-STANDARD	Yes	
52	S-STANDARD	Yes	
53	S-STANDARD	Yes	
54	S-STANDARD	Yes	
55	S-STANDARD	Yes	
56	S-STANDARD	Yes	
57	S-STANDARD	Yes	
58	S-STANDARD	Yes	
59	S-STANDARD	Yes	
60	S-STANDARD	Yes	
61	S-STANDARD	Yes	
62	S-STANDARD	Yes	
63	S-STANDARD	Yes	
64	S-STANDARD	Yes	

Vehicle Detector Plan Number - 1

Veh Detector	Phase	ECPI Log	Call Option	Delay Time	Ext Option	Extend Time / Passage Time	Queue Lim. / Discon. Time	Use Added Initial	Cross Switch Ph	Lock In	NTCIP Vol.	NTCIP Occ.	Pmt Queue Delay
1	1	No	Yes	2.0	Passage	0.0	0	No	0	None	No	No	No
2	2	No	Yes	2.0	Passage	0.0	0	No	0	None	No	No	No
3	2	No	Yes	2.0	Passage	0.0	0	No	0	None	No	No	No
4	0	No	Yes	0.0	Passage	0.0	0	No	0	None	No	No	No
5	3	No	Yes	2.0	Passage	0.0	0	No	0	None	No	No	No
6	4	No	Yes	0.0	Passage	0.0	0	No	0	None	No	No	No
7	4	No	Yes	0.0	Passage	0.0	0	No	0	None	No	No	No
8	0	No	Yes	0.0	Passage	0.0	0	No	0	None	No	No	No
9	0	No	Yes	0.0	Passage	0.0	0	No	0	None	No	No	No
10	2	No	Yes	2.0	Passage	0.0	0	No	0	None	No	No	No
11	2	No	Yes	2.0	Passage	0.0	0	No	0	None	No	No	No
12	0	No	Yes	0.0	Passage	0.0	0	No	0	None	No	No	No
13	0	No	Yes	0.0	Passage	0.0	0	No	0	None	No	No	No
14	4	No	Yes	0.0	Passage	0.0	0	No	0	None	No	No	No
15	4	No	Yes	0.0	Passage	0.0	0	No	0	None	No	No	No
16	0	No	Yes	0.0	Passage	0.0	0	No	0	None	No	No	No
17	5	No	Yes	2.0	Passage	0.0	0	No	0	None	No	No	No
18	6	No	Yes	2.0	Passage	0.0	0	No	0	None	No	No	No
19	6	No	Yes	2.0	Passage	0.0	0	No	0	None	No	No	No
20	0	No	Yes	0.0	Queue	0.0	0	No	0	None	No	No	No
21	7	No	Yes	2.0	Passage	0.0	0	No	0	None	No	No	No
22	8	No	Yes	0.0	Passage	0.0	0	No	0	None	No	No	No
23	8	No	Yes	0.0	Passage	0.0	0	No	0	None	No	No	No
24	0	No	Yes	0.0	Passage	0.0	0	No	0	None	No	No	No
25	0	No	Yes	0.0	Passage	0.0	0	No	0	None	No	No	No
26	6	No	Yes	0.0	Passage	0.0	0	No	0	None	No	No	No
27	6	No	Yes	0.0	Passage	0.0	0	No	0	None	No	No	No

28	0	No	Yes	0.0	Passage	0.0	0	No	0	None	No	No	No
29	0	No	Yes	0.0	Passage	0.0	0	No	0	None	No	No	No
30	0	No	Yes	0.0	Passage	0.0	0	No	0	None	No	No	No
31	0	No	Yes	0.0	Passage	0.0	0	No	0	None	No	No	No
32	0	No	Yes	0.0	Passage	0.0	0	No	0	None	No	No	No
33	0	No	Yes	0.0	Passage	0.0	0	No	0	None	No	No	No
34	0	No	Yes	0.0	Passage	0.0	0	No	0	None	No	No	No
35	0	No	Yes	0.0	Passage	0.0	0	No	0	None	No	No	No
36	0	No	Yes	0.0	Passage	0.0	0	No	0	None	No	No	No
37	0	No	Yes	0.0	Passage	0.0	0	No	0	None	No	No	No
38	0	No	Yes	0.0	Passage	0.0	0	No	0	None	No	No	No
39	0	No	Yes	0.0	Passage	0.0	0	No	0	None	No	No	No
40	0	No	Yes	0.0	Passage	0.0	0	No	0	None	No	No	No
41	0	No	Yes	0.0	Passage	0.0	0	No	0	None	No	No	No
42	0	No	Yes	0.0	Passage	0.0	0	No	0	None	No	No	No
43	0	No	Yes	0.0	Passage	0.0	0	No	0	None	No	No	No
44	0	No	Yes	0.0	Passage	0.0	0	No	0	None	No	No	No
45	0	No	Yes	0.0	Passage	0.0	0	No	0	None	No	No	No
46	0	No	Yes	0.0	Passage	0.0	0	No	0	None	No	No	No
47	0	No	Yes	0.0	Passage	0.0	0	No	0	None	No	No	No
48	0	No	Yes	0.0	Passage	0.0	0	No	0	None	No	No	No
49	0	No	Yes	0.0	Passage	0.0	0	No	0	None	No	No	No
50	0	No	Yes	0.0	Passage	0.0	0	No	0	None	No	No	No
51	0	No	Yes	0.0	Passage	0.0	0	No	0	None	No	No	No
52	0	No	Yes	0.0	Passage	0.0	0	No	0	None	No	No	No
53	0	No	Yes	0.0	Passage	0.0	0	No	0	None	No	No	No
54	0	No	Yes	0.0	Passage	0.0	0	No	0	None	No	No	No
55	0	No	Yes	0.0	Passage	0.0	0	No	0	None	No	No	No
56	0	No	Yes	0.0	Passage	0.0	0	No	0	None	No	No	No
57	0	No	Yes	0.0	Passage	0.0	0	No	0	None	No	No	No
58	0	No	Yes	0.0	Passage	0.0	0	No	0	None	No	No	No
59	0	No	Yes	0.0	Passage	0.0	0	No	0	None	No	No	No
60	0	No	Yes	0.0	Passage	0.0	0	No	0	None	No	No	No
61	0	No	Yes	0.0	Passage	0.0	0	No	0	None	No	No	No
62	0	No	Yes	0.0	Passage	0.0	0	No	0	None	No	No	No
63	0	No	Yes	0.0	Passage	0.0	0	No	0	None	No	No	No
64	0	No	Yes	0.0	Passage	0.0	0	No	0	None	No	No	No

Vehicle Detector Plan Number - 2

Veh Detector	Phase	ECPI Log	Call Option	Delay Time	Ext Option	Extend Time / Passage Time	Queue Lim. / Discon. Time	Use Added Initial	Cross Switch Ph	Lock In	NTCIP Vol.	NTCIP Occ.	Pmt Queue Delay
1	1	No	Yes	0.0	Passage	0.0	0	No	0	None	No	No	No
2	2	No	Yes	0.0	Passage	0.0	0	No	0	None	No	No	No
3	3	No	Yes	0.0	Passage	0.0	0	No	0	None	No	No	No
4	4	No	Yes	0.0	Passage	0.0	0	No	0	None	No	No	No
5	5	No	Yes	0.0	Passage	0.0	0	No	0	None	No	No	No
6	6	No	Yes	0.0	Passage	0.0	0	No	0	None	No	No	No
7	7	No	Yes	0.0	Passage	0.0	0	No	0	None	No	No	No
8	8	No	Yes	0.0	Passage	0.0	0	No	0	None	No	No	No
9	2	No	Yes	0.0	Passage	0.0	0	No	0	None	No	No	No
10	2	No	Yes	0.0	Passage	0.0	0	No	0	None	No	No	No
11	4	No	Yes	0.0	Passage	0.0	0	No	0	None	No	No	No
12	4	No	Yes	0.0	Passage	0.0	0	No	0	None	No	No	No
13	6	No	Yes	0.0	Passage	0.0	0	No	0	None	No	No	No
14	6	No	Yes	0.0	Passage	0.0	0	No	0	None	No	No	No
15	8	No	Yes	0.0	Passage	0.0	0	No	0	None	No	No	No
16	8	No	Yes	0.0	Passage	0.0	0	No	0	None	No	No	No
17	1	No	Yes	0.0	Passage	0.0	0	No	0	None	No	No	No
18	2	No	Yes	0.0	Passage	0.0	0	No	0	None	No	No	No
19	3	No	Yes	0.0	Passage	0.0	0	No	0	None	No	No	No
20	4	No	Yes	0.0	Queue	0.0	0	No	0	None	No	No	No
21	5	No	Yes	0.0	Passage	0.0	0	No	0	None	No	No	No

22	6	No	Yes	0.0	Passage	0.0	0	No	0	None	No	No	No
23	7	No	Yes	0.0	Passage	0.0	0	No	0	None	No	No	No
24	8	No	Yes	0.0	Passage	0.0	0	No	0	None	No	No	No
25	2	No	Yes	0.0	Passage	0.0	0	No	0	None	No	No	No
26	4	No	Yes	0.0	Passage	0.0	0	No	0	None	No	No	No
27	6	No	Yes	0.0	Passage	0.0	0	No	0	None	No	No	No
28	8	No	Yes	0.0	Passage	0.0	0	No	0	None	No	No	No
29	0	No	Yes	0.0	Passage	0.0	0	No	0	None	No	No	No
30	0	No	Yes	0.0	Passage	0.0	0	No	0	None	No	No	No
31	0	No	Yes	0.0	Passage	0.0	0	No	0	None	No	No	No
32	0	No	Yes	0.0	Passage	0.0	0	No	0	None	No	No	No
33	0	No	Yes	0.0	Passage	0.0	0	No	0	None	No	No	No
34	0	No	Yes	0.0	Passage	0.0	0	No	0	None	No	No	No
35	0	No	Yes	0.0	Passage	0.0	0	No	0	None	No	No	No
36	0	No	Yes	0.0	Passage	0.0	0	No	0	None	No	No	No
37	0	No	Yes	0.0	Passage	0.0	0	No	0	None	No	No	No
38	0	No	Yes	0.0	Passage	0.0	0	No	0	None	No	No	No
39	0	No	Yes	0.0	Passage	0.0	0	No	0	None	No	No	No
40	0	No	Yes	0.0	Passage	0.0	0	No	0	None	No	No	No
41	0	No	Yes	0.0	Passage	0.0	0	No	0	None	No	No	No
42	0	No	Yes	0.0	Passage	0.0	0	No	0	None	No	No	No
43	0	No	Yes	0.0	Passage	0.0	0	No	0	None	No	No	No
44	0	No	Yes	0.0	Passage	0.0	0	No	0	None	No	No	No
45	0	No	Yes	0.0	Passage	0.0	0	No	0	None	No	No	No
46	0	No	Yes	0.0	Passage	0.0	0	No	0	None	No	No	No
47	0	No	Yes	0.0	Passage	0.0	0	No	0	None	No	No	No
48	0	No	Yes	0.0	Passage	0.0	0	No	0	None	No	No	No
49	0	No	Yes	0.0	Passage	0.0	0	No	0	None	No	No	No
50	0	No	Yes	0.0	Passage	0.0	0	No	0	None	No	No	No
51	0	No	Yes	0.0	Passage	0.0	0	No	0	None	No	No	No
52	0	No	Yes	0.0	Passage	0.0	0	No	0	None	No	No	No
53	0	No	Yes	0.0	Passage	0.0	0	No	0	None	No	No	No
54	0	No	Yes	0.0	Passage	0.0	0	No	0	None	No	No	No
55	0	No	Yes	0.0	Passage	0.0	0	No	0	None	No	No	No
56	0	No	Yes	0.0	Passage	0.0	0	No	0	None	No	No	No
57	0	No	Yes	0.0	Passage	0.0	0	No	0	None	No	No	No
58	0	No	Yes	0.0	Passage	0.0	0	No	0	None	No	No	No
59	0	No	Yes	0.0	Passage	0.0	0	No	0	None	No	No	No
60	0	No	Yes	0.0	Passage	0.0	0	No	0	None	No	No	No
61	0	No	Yes	0.0	Passage	0.0	0	No	0	None	No	No	No
62	0	No	Yes	0.0	Passage	0.0	0	No	0	None	No	No	No
63	0	No	Yes	0.0	Passage	0.0	0	No	0	None	No	No	No
64	0	No	Yes	0.0	Passage	0.0	0	No	0	None	No	No	No

Vehicle Detector Plan Number - 3

Veh Detector	Phase	ECPI Log	Call Option	Delay Time	Ext Option	Extend Time / Passage Time	Queue Lim. / Discon. Time	Use Added Initial	Cross Switch Ph	Lock In	NTCIP Vol.	NTCIP Occ.	Pmt Queue Delay
1	1	No	Yes	0.0	Passage	0.0	0	No	0	None	No	No	No
2	2	No	Yes	0.0	Passage	0.0	0	No	0	None	No	No	No
3	3	No	Yes	0.0	Passage	0.0	0	No	0	None	No	No	No
4	4	No	Yes	0.0	Passage	0.0	0	No	0	None	No	No	No
5	5	No	Yes	0.0	Passage	0.0	0	No	0	None	No	No	No
6	6	No	Yes	0.0	Passage	0.0	0	No	0	None	No	No	No
7	7	No	Yes	0.0	Passage	0.0	0	No	0	None	No	No	No
8	8	No	Yes	0.0	Passage	0.0	0	No	0	None	No	No	No
9	2	No	Yes	0.0	Passage	0.0	0	No	0	None	No	No	No
10	2	No	Yes	0.0	Passage	0.0	0	No	0	None	No	No	No
11	4	No	Yes	0.0	Passage	0.0	0	No	0	None	No	No	No
12	4	No	Yes	0.0	Passage	0.0	0	No	0	None	No	No	No
13	6	No	Yes	0.0	Passage	0.0	0	No	0	None	No	No	No
14	6	No	Yes	0.0	Passage	0.0	0	No	0	None	No	No	No
15	8	No	Yes	0.0	Passage	0.0	0	No	0	None	No	No	No

16	8	No	Yes	0.0	Passage	0.0	0	No	0	None	No	No	No
17	1	No	Yes	0.0	Passage	0.0	0	No	0	None	No	No	No
18	2	No	Yes	0.0	Passage	0.0	0	No	0	None	No	No	No
19	3	No	Yes	0.0	Passage	0.0	0	No	0	None	No	No	No
20	4	No	Yes	0.0	Queue	0.0	0	No	0	None	No	No	No
21	5	No	Yes	0.0	Passage	0.0	0	No	0	None	No	No	No
22	6	No	Yes	0.0	Passage	0.0	0	No	0	None	No	No	No
23	7	No	Yes	0.0	Passage	0.0	0	No	0	None	No	No	No
24	8	No	Yes	0.0	Passage	0.0	0	No	0	None	No	No	No
25	2	No	Yes	0.0	Passage	0.0	0	No	0	None	No	No	No
26	4	No	Yes	0.0	Passage	0.0	0	No	0	None	No	No	No
27	6	No	Yes	0.0	Passage	0.0	0	No	0	None	No	No	No
28	8	No	Yes	0.0	Passage	0.0	0	No	0	None	No	No	No
29	0	No	Yes	0.0	Passage	0.0	0	No	0	None	No	No	No
30	0	No	Yes	0.0	Passage	0.0	0	No	0	None	No	No	No
31	0	No	Yes	0.0	Passage	0.0	0	No	0	None	No	No	No
32	0	No	Yes	0.0	Passage	0.0	0	No	0	None	No	No	No
33	0	No	Yes	0.0	Passage	0.0	0	No	0	None	No	No	No
34	0	No	Yes	0.0	Passage	0.0	0	No	0	None	No	No	No
35	0	No	Yes	0.0	Passage	0.0	0	No	0	None	No	No	No
36	0	No	Yes	0.0	Passage	0.0	0	No	0	None	No	No	No
37	0	No	Yes	0.0	Passage	0.0	0	No	0	None	No	No	No
38	0	No	Yes	0.0	Passage	0.0	0	No	0	None	No	No	No
39	0	No	Yes	0.0	Passage	0.0	0	No	0	None	No	No	No
40	0	No	Yes	0.0	Passage	0.0	0	No	0	None	No	No	No
41	0	No	Yes	0.0	Passage	0.0	0	No	0	None	No	No	No
42	0	No	Yes	0.0	Passage	0.0	0	No	0	None	No	No	No
43	0	No	Yes	0.0	Passage	0.0	0	No	0	None	No	No	No
44	0	No	Yes	0.0	Passage	0.0	0	No	0	None	No	No	No
45	0	No	Yes	0.0	Passage	0.0	0	No	0	None	No	No	No
46	0	No	Yes	0.0	Passage	0.0	0	No	0	None	No	No	No
47	0	No	Yes	0.0	Passage	0.0	0	No	0	None	No	No	No
48	0	No	Yes	0.0	Passage	0.0	0	No	0	None	No	No	No
49	0	No	Yes	0.0	Passage	0.0	0	No	0	None	No	No	No
50	0	No	Yes	0.0	Passage	0.0	0	No	0	None	No	No	No
51	0	No	Yes	0.0	Passage	0.0	0	No	0	None	No	No	No
52	0	No	Yes	0.0	Passage	0.0	0	No	0	None	No	No	No
53	0	No	Yes	0.0	Passage	0.0	0	No	0	None	No	No	No
54	0	No	Yes	0.0	Passage	0.0	0	No	0	None	No	No	No
55	0	No	Yes	0.0	Passage	0.0	0	No	0	None	No	No	No
56	0	No	Yes	0.0	Passage	0.0	0	No	0	None	No	No	No
57	0	No	Yes	0.0	Passage	0.0	0	No	0	None	No	No	No
58	0	No	Yes	0.0	Passage	0.0	0	No	0	None	No	No	No
59	0	No	Yes	0.0	Passage	0.0	0	No	0	None	No	No	No
60	0	No	Yes	0.0	Passage	0.0	0	No	0	None	No	No	No
61	0	No	Yes	0.0	Passage	0.0	0	No	0	None	No	No	No
62	0	No	Yes	0.0	Passage	0.0	0	No	0	None	No	No	No
63	0	No	Yes	0.0	Passage	0.0	0	No	0	None	No	No	No
64	0	No	Yes	0.0	Passage	0.0	0	No	0	None	No	No	No

Vehicle Detector Plan Number - 4

Veh Detector	Phase	ECPI Log	Call Option	Delay Time	Ext Option	Extend Time / Passage Time	Queue Lim. / Discon. Time	Use Added Initial	Cross Switch Ph	Lock In	NTCIP Vol.	NTCIP Occ.	Pmt Queue Delay
1	1	No	Yes	0.0	Passage	0.0	0	No	0	None	No	No	No
2	2	No	Yes	0.0	Passage	0.0	0	No	0	None	No	No	No
3	3	No	Yes	0.0	Passage	0.0	0	No	0	None	No	No	No
4	4	No	Yes	0.0	Passage	0.0	0	No	0	None	No	No	No
5	5	No	Yes	0.0	Passage	0.0	0	No	0	None	No	No	No
6	6	No	Yes	0.0	Passage	0.0	0	No	0	None	No	No	No
7	7	No	Yes	0.0	Passage	0.0	0	No	0	None	No	No	No
8	8	No	Yes	0.0	Passage	0.0	0	No	0	None	No	No	No
9	2	No	Yes	0.0	Passage	0.0	0	No	0	None	No	No	No

10	2	No	Yes	0.0	Passage	0.0	0	No	0	None	No	No	No
11	4	No	Yes	0.0	Passage	0.0	0	No	0	None	No	No	No
12	4	No	Yes	0.0	Passage	0.0	0	No	0	None	No	No	No
13	6	No	Yes	0.0	Passage	0.0	0	No	0	None	No	No	No
14	6	No	Yes	0.0	Passage	0.0	0	No	0	None	No	No	No
15	8	No	Yes	0.0	Passage	0.0	0	No	0	None	No	No	No
16	8	No	Yes	0.0	Passage	0.0	0	No	0	None	No	No	No
17	1	No	Yes	0.0	Passage	0.0	0	No	0	None	No	No	No
18	2	No	Yes	0.0	Passage	0.0	0	No	0	None	No	No	No
19	3	No	Yes	0.0	Passage	0.0	0	No	0	None	No	No	No
20	4	No	Yes	0.0	Queue	0.0	0	No	0	None	No	No	No
21	5	No	Yes	0.0	Passage	0.0	0	No	0	None	No	No	No
22	6	No	Yes	0.0	Passage	0.0	0	No	0	None	No	No	No
23	7	No	Yes	0.0	Passage	0.0	0	No	0	None	No	No	No
24	8	No	Yes	0.0	Passage	0.0	0	No	0	None	No	No	No
25	2	No	Yes	0.0	Passage	0.0	0	No	0	None	No	No	No
26	4	No	Yes	0.0	Passage	0.0	0	No	0	None	No	No	No
27	6	No	Yes	0.0	Passage	0.0	0	No	0	None	No	No	No
28	8	No	Yes	0.0	Passage	0.0	0	No	0	None	No	No	No
29	0	No	Yes	0.0	Passage	0.0	0	No	0	None	No	No	No
30	0	No	Yes	0.0	Passage	0.0	0	No	0	None	No	No	No
31	0	No	Yes	0.0	Passage	0.0	0	No	0	None	No	No	No
32	0	No	Yes	0.0	Passage	0.0	0	No	0	None	No	No	No
33	0	No	Yes	0.0	Passage	0.0	0	No	0	None	No	No	No
34	0	No	Yes	0.0	Passage	0.0	0	No	0	None	No	No	No
35	0	No	Yes	0.0	Passage	0.0	0	No	0	None	No	No	No
36	0	No	Yes	0.0	Passage	0.0	0	No	0	None	No	No	No
37	0	No	Yes	0.0	Passage	0.0	0	No	0	None	No	No	No
38	0	No	Yes	0.0	Passage	0.0	0	No	0	None	No	No	No
39	0	No	Yes	0.0	Passage	0.0	0	No	0	None	No	No	No
40	0	No	Yes	0.0	Passage	0.0	0	No	0	None	No	No	No
41	0	No	Yes	0.0	Passage	0.0	0	No	0	None	No	No	No
42	0	No	Yes	0.0	Passage	0.0	0	No	0	None	No	No	No
43	0	No	Yes	0.0	Passage	0.0	0	No	0	None	No	No	No
44	0	No	Yes	0.0	Passage	0.0	0	No	0	None	No	No	No
45	0	No	Yes	0.0	Passage	0.0	0	No	0	None	No	No	No
46	0	No	Yes	0.0	Passage	0.0	0	No	0	None	No	No	No
47	0	No	Yes	0.0	Passage	0.0	0	No	0	None	No	No	No
48	0	No	Yes	0.0	Passage	0.0	0	No	0	None	No	No	No
49	0	No	Yes	0.0	Passage	0.0	0	No	0	None	No	No	No
50	0	No	Yes	0.0	Passage	0.0	0	No	0	None	No	No	No
51	0	No	Yes	0.0	Passage	0.0	0	No	0	None	No	No	No
52	0	No	Yes	0.0	Passage	0.0	0	No	0	None	No	No	No
53	0	No	Yes	0.0	Passage	0.0	0	No	0	None	No	No	No
54	0	No	Yes	0.0	Passage	0.0	0	No	0	None	No	No	No
55	0	No	Yes	0.0	Passage	0.0	0	No	0	None	No	No	No
56	0	No	Yes	0.0	Passage	0.0	0	No	0	None	No	No	No
57	0	No	Yes	0.0	Passage	0.0	0	No	0	None	No	No	No
58	0	No	Yes	0.0	Passage	0.0	0	No	0	None	No	No	No
59	0	No	Yes	0.0	Passage	0.0	0	No	0	None	No	No	No
60	0	No	Yes	0.0	Passage	0.0	0	No	0	None	No	No	No
61	0	No	Yes	0.0	Passage	0.0	0	No	0	None	No	No	No
62	0	No	Yes	0.0	Passage	0.0	0	No	0	None	No	No	No
63	0	No	Yes	0.0	Passage	0.0	0	No	0	None	No	No	No
64	0	No	Yes	0.0	Passage	0.0	0	No	0	None	No	No	No

Ped Detector Phase Assignment (MM) 6-3

Mode: NTCIP

Called Phase	Detector
1	1
2	2
3	3
4	4

5	5
6	6
7	7
8	8
9	9
10	10
11	11
12	12
13	13
14	14
15	15
16	16

Ontario, CA

"ECO NO LITE
C D M T R O L PRODUCTS, INC.
SoluLians LhaL Move the World™

Archibald Avenue @ Airport Drive - 10.211.54.61 - Cobalt - Econolite Type - Cobalt

Detectors

Detectors - Pg 2

Log - Speed Detector Setup (MM) 6-4
NTCIP Log Period: 60 ECPI Log Period: 0 Length Unit: Inches

Speed Detector	Local Detector	One/Two Detector	Vehicle Length	Trap length	Enable Log
1	0	1	0	0	No
2	0	1	0	0	No
3	0	1	0	0	No
4	0	1	0	0	No
5	0	1	0	0	No
6	0	1	0	0	No
7	0	1	0	0	No
8	0	1	0	0	No
9	0	1	0	0	No
10	0	1	0	0	No
11	0	1	0	0	No
12	0	1	0	0	No
13	0	1	0	0	No
14	0	1	0	0	No
15	0	1	0	0	No
16	0	1	0	0	No

Vehicle Detector Diagnostics (MM) 6-5

Veh Diagnostic Plan Number - 1

Det	Counts	Act	Pres	Multiplier	Failed Time	Failed Call Delay

Veh Diagnostic Plan Number - 2

Det	Counts	Act	Pres	Multiplier	Failed Time	Failed Call Delay

Veh Diagnostic Plan Number - 3

Det	Counts	Act	Pres	Multiplier	Failed Time	Failed Call Delay

Veh Diagnostic Plan Number - 4

Det	Counts	Act	Pres	Multiplier	Failed Time	Failed Call Delay

Pedestrian Detector Diagnostics (MM) 6-6

Ped Diagnostic Plan Number - 1

Det	Counts	Act	Pres	Multiplier

Ped Diagnostic Plan Number - 2

Det	Counts	Act	Pres	Multiplier

Ped Diagnostic Plan Number - 3

Det	Counts	Act	Pres	Multiplier

Ped Diagnostic Plan Number - 4

Det	Counts	Act	Pres	Multiplier

```
ÉÍÍÍÍÍÍÍÍÍÍÍÍÍÍÍÍÍÍÍÍÍÍÍÍÍÍÍÍÍÍÍÍÍÍÍÍÍÍÍÍÍÍ»
º*****************************************º
º*   ECONOLITE CONTROL PRODUCTS, INC.    *º
º*            ASC/2-2000                 *º
º*          Copyright (C) 1992           *º
º*                                       *º
º* City of Ontario, Traffic Engineering  *º
º*  ASC/2-2100  Configuration Ver. 1.1   *º
º*                                       *º
º*   SOFTWARE ASSY              VERSION   *º
º*   BOOT            32783        1.28   *º
º*   MAIN PROGRAM    34556        1.77   *º
º*   HELP            32789        1.62   *º
º*   CONFIGURATION   32791 (32K) C8145   *º
º*                                       *º
º*                                       *º
º*****************************************º
ÈÍÍÍÍÍÍÍÍÍÍÍÍÍÍÍÍÍÍÍÍÍÍÍÍÍÍÍÍÍÍÍÍÍÍÍÍÍÍÍÍÍÍ¼

ÉÍÍÍÍÍÍÍÍÍÍÍÍÍÍÍÍÍÍÍÍÍÍÍÍÍÍÍÍÍÍÍÍÍÍÍÍÍÍÍÍÍÍ»
º           CONTROLLER SEQUENCE           º
º                                         º
º    ------------ PRIORITY ------------    º
º                                1  1  1    º
º    1..2..3..4..5..6..7..8..9..0..1..2    º
ºR1  1  2| 3  4| 9 10| 0  0  0  0  0  0    º
ºR2  5  6| 7  8|11 12| 0  0  0  0  0  0    º
ºCG   .  ^  .  ^  .  ^  .  .  .  .  .  .    º
º                                         º
º                                         º
ºR1,R2 = RING 1 AND 2 PHASE ASSIGNMENT.   º
º                                         º
ºCG    = BARRIER LOCATION BETWEEN         º
º        CONCURRENT PHASE TIMING GROUPS.  º
º                                         º
ºEND OF SUBMENU                           º
ÈÍÍÍÍÍÍÍÍÍÍÍÍÍÍÍÍÍÍÍÍÍÍÍÍÍÍÍÍÍÍÍÍÍÍÍÍÍÍÍÍÍÍ¼

ÉÍÍÍÍÍÍÍÍÍÍÍÍÍÍÍÍÍÍÍÍÍÍÍÍÍÍÍÍÍÍÍÍÍÍÍÍÍÍÍÍÍÍ»
º              PHASES IN USE              º
º                                         º
º                  ----- PHASE NUMBER ----º
º                                  1 1 1º
º                  1 2 3 4 5 6 7 8 9 0 1 2º
ºPHASES IN USE     . X X X . . . X . . . .º
ºEXCLUSIVE PED     . . . . . . . . . . . .º
º                                         º
º                                         º
º                                         º
º                                         º
º                                         º
º                                         º
º                                         º
º                                         º
º                                         º
ºEND OF SUBMENU                           º
ÈÍÍÍÍÍÍÍÍÍÍÍÍÍÍÍÍÍÍÍÍÍÍÍÍÍÍÍÍÍÍÍÍÍÍÍÍÍÍÍÍÍÍ¼

ÉÍÍÍÍÍÍÍÍÍÍÍÍÍÍÍÍÍÍÍÍÍÍÍÍÍÍÍÍÍÍÍÍÍÍÍÍÍÍÍÍÍÍ»
ºPHASE TO LOAD SWITCH (MMU) ASSIGNMENT    º
º                                         º
ºLOAD       SIGNAL    LOAD       SIGNAL   º
ºSWITCH     DRIVER    SWITCH     DRIVER   º
```

```
º(MMU)      GROUP     (MMU)      GROUP   º
ºCHANNEL PH/OLAP PED  CHANNEL PH/OLAP PEDº
º   1       0     .     9       0     . º
º   2       2     .    10       0     . º
º   3       3     .    11       0     . º
º   4       4     .    12       0     . º
º   5       0     .    13       0     . º
º   6       0     .    14       0     . º
º   7       0     .    15       0     . º
º   8       8     .    16       0     . º
ºENTER 13-16 FOR OVERLAPS A-D            º
ºEND OF SUBMENU                          º
ÈÍÍÍÍÍÍÍÍÍÍÍÍÍÍÍÍÍÍÍÍÍÍÍÍÍÍÍÍÍÍÍÍÍÍÍÍÍÍ¼

ÉÍÍÍÍÍÍÍÍÍÍÍÍÍÍÍÍÍÍÍÍÍÍÍÍÍÍÍÍÍÍÍÍÍÍÍÍÍÍ»
º          SDLC OPTIONS/ENABLES          º
º                                        º
º                 ----- BIU NUMBER ----- º
º                 1..2..3..4..5..6..7..8 º
ºTERM & FACIL...  X  .  .  .  .  .  .  . º
ºDETECTOR RACK..  X  .  .  .  .  .  .  . º
º                                        º
ºTYPE 2 RUNS AS TYPE 1................ X º
ºMMU DISABLE.......................... . º
ºDIAGNOSTIC ENABLE (TEST FIXTURE)..... . º
ºPEER TO PEER ENABLE.................. . º
º                                        º
ºPEER TO PEER ADDRESSES:                 º
º1) 255  2) 255  3) 255  4) 255   5) 255 º
º6) 255  7) 255  8) 255  9) 255  10) 255 º
ºEND OF SUBMENU                          º
ÈÍÍÍÍÍÍÍÍÍÍÍÍÍÍÍÍÍÍÍÍÍÍÍÍÍÍÍÍÍÍÍÍÍÍÍÍÍÍ¼

ÉÍÍÍÍÍÍÍÍÍÍÍÍÍÍÍÍÍÍÍÍÍÍÍÍÍÍÍÍÍÍÍÍÍÍÍÍÍÍ»
º         PORT2 CONFIGURATION            º
º                                        º
ºPORT2 PROTOCOL.................  TERMNL  º
ºPORT2 ENABLE..................     YES  º
º                                        º
ºDATA RATE (BPS)...............   38.4k  º
ºDATA, PARITY, STOP............ 8, N, 1  º
º                                        º
ºAB3418 ADDRESS.................       0  º
ºAB3418 GROUP ADDRESS..........        0  º
ºAB3418 RESPONSE DELAY.........        0  º
ºAB3418 SINGLE FLAG ENABLE.....       NO  º
ºAB3418 DROP-OUT TIME..........        0  º
ºAB3418 TOD SF SELECT..........        0  º
º                                        º
ºADDITIONAL SCREEN(S)                    º
ÈÍÍÍÍÍÍÍÍÍÍÍÍÍÍÍÍÍÍÍÍÍÍÍÍÍÍÍÍÍÍÍÍÍÍÍÍÍÍ¼

ÉÍÍÍÍÍÍÍÍÍÍÍÍÍÍÍÍÍÍÍÍÍÍÍÍÍÍÍÍÍÍÍÍÍÍÍÍÍÍ»
º         PORT2 CONFIGURATION            º
º                                        º
ºAB3418 RTS TIMING.............       NO  º
ºAB3418 RTS TO CTS DELAY.......        0  º
ºAB3418 RTS TURN-OFF DELAY.....        0  º
ºAB3418 EARLY RTS..............       NO  º
º                                        º
º                                        º
º                                        º
º                                        º
```

```
º                                                  º
º                                                  º
º                                                  º
º                                                  º
º                                                  º
ºEND OF SUBMENU                                    º
ÈÍÍÍÍÍÍÍÍÍÍÍÍÍÍÍÍÍÍÍÍÍÍÍÍÍÍÍÍÍÍÍÍÍÍÍÍÍÍÍÍÍÍ¼

ÉÍÍÍÍÍÍÍÍÍÍÍÍÍÍÍÍÍÍÍÍÍÍÍÍÍÍÍÍÍÍÍÍÍÍÍÍÍÍÍÍÍÍ»
º          PORT3 CONFIGURATION                     º
º                                                  º
ºPORT3 PROTOCOL.................    TELEM          º
ºPORT3 ENABLE...................      YES          º
ºPORT3 MILLISEC TIMING..........       NO          º
ºPORT3 RTS TO CTS DELAY.........        0          º
ºPORT3 RTS TURN-OFF DELAY.......        0          º
º                                                  º
ºDUPLEX -- HALF or FULL.........     FULL          º
ºMODEM DATA RATE (BPS)..........     1200          º
ºDATA, PARITY, STOP.............  8, O, 1          º
º                                                  º
ºTELEMETRY ADDRESS..............        4          º
ºSYSTEM DETECTOR 9-16 ADDRESS...        0          º
ºTELEMETRY RESPONSE DELAY.......     8000          º
ºADDITIONAL SCREEN(S)                              º
ÈÍÍÍÍÍÍÍÍÍÍÍÍÍÍÍÍÍÍÍÍÍÍÍÍÍÍÍÍÍÍÍÍÍÍÍÍÍÍÍÍÍÍ¼

ÉÍÍÍÍÍÍÍÍÍÍÍÍÍÍÍÍÍÍÍÍÍÍÍÍÍÍÍÍÍÍÍÍÍÍÍÍÍÍÍÍÍÍ»
º          PORT3 CONFIGURATION                     º
º                                                  º
ºAB3418 ADDRESS.................        0          º
ºAB3418 GROUP ADDRESS...........        0          º
ºAB3418 RESPONSE DELAY..........        0          º
ºAB3418 SINGLE FLAG ENABLE......       NO          º
ºAB3418 DROP-OUT TIME...........        0          º
ºAB3418 TOD SF SELECT...........        0          º
ºAB3418 EARLY RTS...............       NO          º
º                                                  º
º            RICOCHET OPTION                       º
ºRICOCHET ADDRESS...............        0          º
ºAUTO STATUS DESTINATION ADDR...        0          º
ºAUTO STATUS REPORT DELAY.......        0          º
ºicons LIVE TIME................        0          º
ºEND OF SUBMENU                                    º
ÈÍÍÍÍÍÍÍÍÍÍÍÍÍÍÍÍÍÍÍÍÍÍÍÍÍÍÍÍÍÍÍÍÍÍÍÍÍÍÍÍÍÍ¼

ÉÍÍÍÍÍÍÍÍÍÍÍÍÍÍÍÍÍÍÍÍÍÍÍÍÍÍÍÍÍÍÍÍÍÍÍÍÍÍÍÍÍÍ»
º            ENABLE EVENT LOGS                     º
º                                                  º
ºCRITICAL RFE'S (MMU/TF) . . . . . .   X º
ºNON-CRITICAL RFE'S (DET/TEST) . . .   X º
ºDETECTOR ERRORS . . . . . .   X º
ºCOORDINATION ERRORS . . . . . .   X º
ºMMU FLASH FAULTS  . . . . . .   X º
ºLOCAL FLASH FAULTS  . . . . . .   X º
ºPREEMPT . . . . . .   X º
ºPOWER ON/OFF  . . . . . .   X º
ºLOW BATTERY . . . . . .   X º
ºSPARE . . . . . .   X º
ºALARM 1 . . . . . .   X º
ºALARM 2 . . . . . .   X º
ºALARM 3 . . . . . .   X º
ºADDITIONAL SCREEN(S)                              º
```

```
ÈÍÍÍÍÍÍÍÍÍÍÍÍÍÍÍÍÍÍÍÍÍÍÍÍÍÍÍÍÍÍÍÍÍÍÍÍÍÍÍÍÍÍÍÍÍ¼

ÉÍÍÍÍÍÍÍÍÍÍÍÍÍÍÍÍÍÍÍÍÍÍÍÍÍÍÍÍÍÍÍÍÍÍÍÍÍÍÍÍÍÍÍÍÍ»
º            ENABLE EVENT LOGS                        º
º                                                     º
ºALARM 4 . . . . . .   .                              º
ºALARM 5 . . . . . .   .                              º
ºALARM 6 . . . . . .   .                              º
ºALARM 7 . . . . . .   .                              º
ºALARM 8 . . . . . .   .                              º
ºALARM 9 . . . . . .   .                              º
ºALARM 10  . . . . . .   .                            º
ºALARM 11  . . . . . .   .                            º
ºALARM 12  . . . . . .   .                            º
ºALARM 13  . . . . . .   .                            º
ºALARM 14  . . . . . .   .                            º
ºALARM 15  . . . . . .   .                            º
ºALARM 16  . . . . . .   .                            º
ºEND OF SUBMENU                                       º
ÈÍÍÍÍÍÍÍÍÍÍÍÍÍÍÍÍÍÍÍÍÍÍÍÍÍÍÍÍÍÍÍÍÍÍÍÍÍÍÍÍÍÍÍÍÍ¼

ÉÍÍÍÍÍÍÍÍÍÍÍÍÍÍÍÍÍÍÍÍÍÍÍÍÍÍÍÍÍÍÍÍÍÍÍÍÍÍÍÍÍÍÍÍÍ»
º                  OPTIONS                            º
º                                                     º
º                                                     º
º                                                     º
ºSUPERVISOR ACCESS CODE...... 0000                    º
º                                                     º
ºDATA CHANGE ACCESS CODE..... 0000                    º
º                                                     º
ºKEY CLICK ENABLE.............  YES                    º
º                                                     º
ºBACKLIGHT ENABLE.............  YES                    º
º                                                     º
º                                                     º
º                                                     º
º                                                     º
ºEND OF SUBMENU                                       º
ÈÍÍÍÍÍÍÍÍÍÍÍÍÍÍÍÍÍÍÍÍÍÍÍÍÍÍÍÍÍÍÍÍÍÍÍÍÍÍÍÍÍÍÍÍÍ¼

♀

ÉÍÍÍÍÍÍÍÍÍÍÍÍÍÍÍÍÍÍÍÍÍÍÍÍÍÍÍÍÍÍÍÍÍÍÍÍÍÍÍÍÍÍÍÍÍ»
º                MMU PROGRAM                          º
ºCAN SERVE WITH:                                      º
º            1 1 1 1 1 1 1                            º
ºCHANNEL     6 5 4 3 2 1 0 9 8 7 6 5 4 3 2º
º  1         . . . . . .                              º
º  2         . . . . . .                              º
º  3         . . . . . .                              º
º  4         . . . . . .                              º
º  5         . . . . . .                              º
º  6         . . . . . .                              º
º  7         . . . . . .                              º
º  8         . . . . . .                              º
º  9         . . . . . .                              º
º 10         . . . . . .                              º
º 11         . . . . . .                              º
ºADDITIONAL SCREEN(S)                                 º
ÈÍÍÍÍÍÍÍÍÍÍÍÍÍÍÍÍÍÍÍÍÍÍÍÍÍÍÍÍÍÍÍÍÍÍÍÍÍÍÍÍÍÍÍÍÍ¼

ÉÍÍÍÍÍÍÍÍÍÍÍÍÍÍÍÍÍÍÍÍÍÍÍÍÍÍÍÍÍÍÍÍÍÍÍÍÍÍÍÍÍÍÍÍÍ»
º                MMU PROGRAM                          º
ºCAN SERVE WITH:                                      º
º            1 1 1 1 1 1 1                            º
```

```
ºCHANNEL    6 5 4 3 2 1 0 9 8 7 6 5 4 3 2º
º 12        . . . .                     º
º 13        . . .                       º
º 14        . .                         º
º 15        .                           º
º                                       º
º                                       º
º                                       º
º                                       º
º                                       º
º                                       º
º                                       º
º                                       º
ºEND OF SUBMENU                         º
ÈÍÍÍÍÍÍÍÍÍÍÍÍÍÍÍÍÍÍÍÍÍÍÍÍÍÍÍÍÍÍÍÍÍÍÍÍÍÍ¼

ÉÍÍÍÍÍÍÍÍÍÍÍÍÍÍÍÍÍÍÍÍÍÍÍÍÍÍÍÍÍÍÍÍÍÍÍÍÍÍ»
º*****************************************º
º*   ECONOLITE CONTROL PRODUCTS, INC.    *º
º*             ASC/2-2000                *º
º*          Copyright (C) 1992           *º
º*                                       *º
º* City of Ontario, Traffic Engineering *º
º*  ASC/2-2100  Configuration Ver. 1.1   *º
º*                                       *º
º*   SOFTWARE ASSY              VERSION   *º
º*   BOOT            32783        1.28   *º
º*   MAIN PROGRAM    34556        1.77   *º
º*   HELP            32789        1.62   *º
º*   CONFIGURATION   32791 (32K) C8145   *º
º*                                       *º
º*                                       *º
º*****************************************º
ÈÍÍÍÍÍÍÍÍÍÍÍÍÍÍÍÍÍÍÍÍÍÍÍÍÍÍÍÍÍÍÍÍÍÍÍÍÍÍ¼

ÉÍÍÍÍÍÍÍÍÍÍÍÍÍÍÍÍÍÍÍÍÍÍÍÍÍÍÍÍÍÍÍÍÍÍÍÍÍÍ»
º          CONTROLLER TIMING DATA           º
ºPHASE...   1...2...3...4...5...6...7...8º
ºMIN GRN.   0   7   6   6   0   0   0   6º
ºBIKE GRN   0   0   0   0   0   0   0   0º
ºCS MGRN.   0   0   0   0   0   0   0   0º
ºWALK....   0   0   0   0   0   0   0   0º
ºPED CLR.   0   7   0   7   0   7   0   7º
ºVEH EXT. 0.0 2.5 2.5 3.5 0.0 0.0 0.0 3.5º
ºVEH EXT2 0.0 0.0 0.0 0.0 0.0 0.0 0.0 0.0º
ºMAX EXT.   0  20  15  35   0   0   0  35º
ºMAX1....   0  20  15  35   0   0   0  35º
ºMAX2....   0  20  15  35   0   0   0  35º
ºMAX3....   0   0   0   0   0   0   0   0º
º                                         º
ºADDITIONAL SCREEN(S)              MORE->º
ÈÍÍÍÍÍÍÍÍÍÍÍÍÍÍÍÍÍÍÍÍÍÍÍÍÍÍÍÍÍÍÍÍÍÍÍÍÍÍ¼

ÉÍÍÍÍÍÍÍÍÍÍÍÍÍÍÍÍÍÍÍÍÍÍÍÍÍÍÍÍÍÍÍÍÍÍÍÍÍÍ»
º          CONTROLLER TIMING DATA           º
ºPHASE...   1...2...3...4...5...6...7...8º
ºYELLOW.. 3.0 4.0 5.0 5.0 3.0 3.0 3.0 5.0º
ºRED CLR. 0.0 2.0 2.0 2.0 0.0 0.0 0.0 2.0º
ºRED RVT. 0.0 5.0 5.0 5.0 0.0 0.0 0.0 5.0º
º                                         º
ºACT B4..   0   0   0   0   0   0   0   0º
ºSEC/ACT. 0.0 0.0 0.0 0.0 0.0 0.0 0.0 0.0º
ºMAX INI.   0   0   0   0   0   0   0   0º
```

```
ºTIME B4.   0  15   0  20   0   0   0  20º
ºCARS WT.   0   0   0   0   0   0   0   0º
ºTTREDUC.   0  15   0  15   0   0   0  15º
ºMIN GAP. 0.0 0.0 0.0 0.0 0.0 0.0 0.0 0.0º
º                                         º
º                                         º
ºEND OF SUBMENU                    MORE->º
ÈÍÍÍÍÍÍÍÍÍÍÍÍÍÍÍÍÍÍÍÍÍÍÍÍÍÍÍÍÍÍÍÍÍÍÍÍÍÍ¼

ÉÍÍÍÍÍÍÍÍÍÍÍÍÍÍÍÍÍÍÍÍÍÍÍÍÍÍÍÍÍÍÍÍÍÍÍÍÍÍ»
º         CONTROLLER TIMING DATA          º
ºPHASE...   9..10..11..12                 º
ºMIN GRN.   0   0   0   0                 º
ºBIKE GRN   0   0   0   0                 º
ºCS MGRN.   0   0   0   0                 º
ºWALK....   0   0   0   0                 º
ºPED CLR.   0   7   0   7                 º
ºVEH EXT. 0.0 0.0 0.0 0.0                 º
ºVEH EXT2 0.0 0.0 0.0 0.0                 º
ºMAX EXT.   0   0   0   0                 º
ºMAX1....   0   0   0   0                 º
ºMAX2....   0   0   0   0                 º
ºMAX3....   0   0   0   0                 º
ºDET MAX.   0   0   0   0                 º
º                                         º
ºADDITIONAL SCREEN(S)            <-MORE   º
ÈÍÍÍÍÍÍÍÍÍÍÍÍÍÍÍÍÍÍÍÍÍÍÍÍÍÍÍÍÍÍÍÍÍÍÍÍÍÍ¼

ÉÍÍÍÍÍÍÍÍÍÍÍÍÍÍÍÍÍÍÍÍÍÍÍÍÍÍÍÍÍÍÍÍÍÍÍÍÍÍ»
º         CONTROLLER TIMING DATA          º
ºPHASE...   9..10..11..12                 º
ºYELLOW.. 3.0 3.0 3.0 3.0                 º
ºRED CLR. 0.0 0.0 0.0 0.0                 º
ºRED RVT. 0.0 0.0 0.0 0.0                 º
º                                         º
ºACT B4..   0   0   0   0                 º
ºSEC/ACT. 0.0 0.0 0.0 0.0                 º
ºMAX INI.   0   0   0   0                 º
ºTIME B4.   0   0   0   0                 º
ºCARS WT.   0   0   0   0                 º
ºTTREDUC.   0   0   0   0                 º
ºMIN GAP. 0.0 0.0 0.0 0.0                 º
º                                         º
º                                         º
ºEND OF SUBMENU                  <-MORE   º
ÈÍÍÍÍÍÍÍÍÍÍÍÍÍÍÍÍÍÍÍÍÍÍÍÍÍÍÍÍÍÍÍÍÍÍÍÍÍÍ¼

ÉÍÍÍÍÍÍÍÍÍÍÍÍÍÍÍÍÍÍÍÍÍÍÍÍÍÍÍÍÍÍÍÍÍÍÍÍÍÍ»
º        PHASE OVERLAP ASSIGNMENTS        º
ºOVERLAP CONSISTS OF PHASES:        1 1 1º
ºOVLP PHASE       1 2 3 4 5 6 7 8 9 0 1 2º
º     1           X . . . . . . . . . . .º
º     2           . X . . . . . . . . . .º
º     3           . . X . . . . . . . . .º
º     4           . . . X . . . . . . . .º
º     5           . . . . X . . . . . . .º
º     6           . . . . . X . . . . . .º
º     7           . . . . . . X . . . . .º
º     8           . . . . . . . X . . . .º
º     9           . . . . . . . . X . . .º
º    10           . . . . . . . . . X . .º
º    11           . . . . . . . . . . X .º
º    12           . . . . . . . . . . . Xº
```

```
ºEND OF SUBMENU                                  º
ÈÍÍÍÍÍÍÍÍÍÍÍÍÍÍÍÍÍÍÍÍÍÍÍÍÍÍÍÍÍÍÍÍÍÍÍÍÍÍÍÍÍÍ¼

♀

ÉÍÍÍÍÍÍÍÍÍÍÍÍÍÍÍÍÍÍÍÍÍÍÍÍÍÍÍÍÍÍÍÍÍÍÍÍÍÍÍÍ»
º          PED TIMING CARRYOVER                  º
º                                                 º
º        PHASE      CARRYOVER PHASE               º
º          1              0                       º
º          2              0                       º
º          3              0                       º
º          4              0                       º
º          5              0                       º
º          6              0                       º
º          7              0                       º
º          8              0                       º
º          9              0                       º
º         10              0                       º
º         11              0                       º
º         12              0                       º
ºEND OF SUBMENU                                  º
ÈÍÍÍÍÍÍÍÍÍÍÍÍÍÍÍÍÍÍÍÍÍÍÍÍÍÍÍÍÍÍÍÍÍÍÍÍÍÍÍÍÍÍ¼

ÉÍÍÍÍÍÍÍÍÍÍÍÍÍÍÍÍÍÍÍÍÍÍÍÍÍÍÍÍÍÍÍÍÍÍÍÍÍÍÍÍ»
º         CONTROLLER RECALL DATA                  º
º                                                 º
ºPHASE:                                 1 1 1º
ºPHASE.....  1 2 3 4 5 6 7 8 9 0 1 2º
ºLOCKING MEMORY.  . . . . . .º
ºVEHICLE RECALL.  . . . X . . . X . . . .º
ºPED RECALL.....  . . . . . .º
ºRECALL TO MAX..  . . . . . .º
ºSOFT RECALL....  . . . . . .º
ºDON'T REST HERE  . . . . . .º
ºPED DARK N/CALL  . . . . . .º
º                                                 º
º                                                 º
º                                                 º
º                                                 º
ºEND OF SUBMENU                                  º
ÈÍÍÍÍÍÍÍÍÍÍÍÍÍÍÍÍÍÍÍÍÍÍÍÍÍÍÍÍÍÍÍÍÍÍÍÍÍÍÍÍÍÍ¼

ÉÍÍÍÍÍÍÍÍÍÍÍÍÍÍÍÍÍÍÍÍÍÍÍÍÍÍÍÍÍÍÍÍÍÍÍÍÍÍÍÍ»
º         CONTROLLER OVERLAP DATA                 º
º                                                 º
º                                       1 1 1º
ºOVERLAP A.....   1 2 3 4 5 6 7 8 9 0 1 2º
ºSTANDARD......   . . . . . .º
ºPROTECTED.....   . . . . . .º
ºPERMITTED.....   . . . . . .º
ºENABLE LAG....   . . . . . .º
ºENABLE LEAD...   . . . . . .º
ºSPARE.........   . . . . . .º
º                                                 º
º     ADVANCE GREEN TIMER      0.0                º
º     LAG/LEAD GREEN TIMER     0.0                º
º     LAG/LEAD YELLOW TIMER    0.0                º
º     LAG/LEAD RED TIMER       0.0                º
ºADDITIONAL PAGE(S)                              º
ÈÍÍÍÍÍÍÍÍÍÍÍÍÍÍÍÍÍÍÍÍÍÍÍÍÍÍÍÍÍÍÍÍÍÍÍÍÍÍÍÍÍÍ¼

♀

ÉÍÍÍÍÍÍÍÍÍÍÍÍÍÍÍÍÍÍÍÍÍÍÍÍÍÍÍÍÍÍÍÍÍÍÍÍÍÍÍÍ»
º         CONTROLLER OVERLAP DATA                 º
º                                                 º
```

```
º                                    1 1 1º
ºOVERLAP B.....   1 2 3 4 5 6 7 8 9 0 1 2º
ºSTANDARD......   . . . . . . . . . . . .º
ºPROTECTED.....   . . . . . . . . . . . .º
ºPERMITTED.....   . . . . . . . . . . . .º
ºENABLE LAG....   . . . . . . . . . . . .º
ºENABLE LEAD...   . . . . . . . . . . . .º
ºSPARE.........   . . . . . . . . . . . .º
º                                         º
º     ADVANCE GREEN TIMER      0.0        º
º     LAG/LEAD GREEN TIMER     0.0        º
º     LAG/LEAD YELLOW TIMER    0.0        º
º     LAG/LEAD RED TIMER       0.0        º
ºADDITIONAL PAGE(S)                       º
ÈÍÍÍÍÍÍÍÍÍÍÍÍÍÍÍÍÍÍÍÍÍÍÍÍÍÍÍÍÍÍÍÍÍÍÍÍÍÍÍÍÍ¼

ÉÍÍÍÍÍÍÍÍÍÍÍÍÍÍÍÍÍÍÍÍÍÍÍÍÍÍÍÍÍÍÍÍÍÍÍÍÍÍÍÍÍ»
º         CONTROLLER OVERLAP DATA         º
º                                         º
º                                    1 1 1º
ºOVERLAP C.....   1 2 3 4 5 6 7 8 9 0 1 2º
ºSTANDARD......   . . . . . . . . . . . .º
ºPROTECTED.....   . . . . . . . . . . . .º
ºPERMITTED.....   . . . . . . . . . . . .º
ºENABLE LAG....   . . . . . . . . . . . .º
ºENABLE LEAD...   . . . . . . . . . . . .º
ºSPARE.........   . . . . . . . . . . . .º
º                                         º
º     ADVANCE GREEN TIMER      0.0        º
º     LAG/LEAD GREEN TIMER     0.0        º
º     LAG/LEAD YELLOW TIMER    0.0        º
º     LAG/LEAD RED TIMER       0.0        º
ºADDITIONAL PAGE(S)                       º
ÈÍÍÍÍÍÍÍÍÍÍÍÍÍÍÍÍÍÍÍÍÍÍÍÍÍÍÍÍÍÍÍÍÍÍÍÍÍÍÍÍÍ¼

ÉÍÍÍÍÍÍÍÍÍÍÍÍÍÍÍÍÍÍÍÍÍÍÍÍÍÍÍÍÍÍÍÍÍÍÍÍÍÍÍÍÍ»
º         CONTROLLER OVERLAP DATA         º
º                                         º
º                                    1 1 1º
ºOVERLAP D.....   1 2 3 4 5 6 7 8 9 0 1 2º
ºSTANDARD......   . . . . . . . . . . . .º
ºPROTECTED.....   . . . . . . . . . . . .º
ºPERMITTED.....   . . . . . . . . . . . .º
ºENABLE LAG....   . . . . . . . . . . . .º
ºENABLE LEAD...   . . . . . . . . . . . .º
ºSPARE.........   . . . . . . . . . . . .º
º                                         º
º     ADVANCE GREEN TIMER      0.0        º
º     LAG/LEAD GREEN TIMER     0.0        º
º     LAG/LEAD YELLOW TIMER    0.0        º
º     LAG/LEAD RED TIMER       0.0        º
ºADDITIONAL PAGE(S)                       º
ÈÍÍÍÍÍÍÍÍÍÍÍÍÍÍÍÍÍÍÍÍÍÍÍÍÍÍÍÍÍÍÍÍÍÍÍÍÍÍÍÍÍ¼

ÉÍÍÍÍÍÍÍÍÍÍÍÍÍÍÍÍÍÍÍÍÍÍÍÍÍÍÍÍÍÍÍÍÍÍÍÍÍÍÍÍÍ»
º        PED OVERLAP ASSIGNMENTS          º
ºOVERLAP CONSISTS OF PHASES:         1 1 1º
ºOVLP PHASE       1 2 3 4 5 6 7 8 9 0 1 2º
º     1           . . . . . . . . . . . .º
º     2           . . . . . . . . . . . .º
º     3           . . . . . . . . . . . .º
º     4           . . . . . . . . . . . .º
º     5           . . . . . . . . . . . .º
```

```
º     6           . . . . . . . . . . . .º
º     7           . . . . . . . . . . . .º
º     8           . . . . . . . . . . . .º
º     9           . . . . . . . . . . . .º
º    10           . . . . . . . . . . . .º
º    11           . . . . . . . . . . . .º
º    12           . . . . . . . . . . . .º
ºEND OF SUBMENU                          º
ÈÍÍÍÍÍÍÍÍÍÍÍÍÍÍÍÍÍÍÍÍÍÍÍÍÍÍÍÍÍÍÍÍÍÍÍÍÍÍ¼

ÉÍÍÍÍÍÍÍÍÍÍÍÍÍÍÍÍÍÍÍÍÍÍÍÍÍÍÍÍÍÍÍÍÍÍÍÍÍÍ»
º       CONTROLLER START/FLASH DATA      º
º                                  1 1 1 º
ºPHASE.....  1 2 3 4 5 6 7 8 9 0 1 2 º
ºPOWER START....  . X . . . . . . . . . .º
ºEXTERNAL START.  . X . . . . . . . . . .º
ºENTRY REM FLASH  . . . X . . . X . . . .º
ºEXIT REM FLASH.  . X . . . . . . . . . .º
ºREM FLASH YEL..  . . . . . . . . . . . .º
ºFL TOGETHER PHS  . X . X . . . X . . . .º
ºFL TOGETHER OVLPS A: .  B: .  C: .  D: .º
º                                        º
ºPOWER START.............   YELLOW     º
ºEXTERNAL START..........   YELLOW     º
ºPOWER START ALL RED TIME..   0 SECONDS  º
ºPOWER START FLASH TIME....   0 SECONDS  º
ºADDITIONAL PAGE(S)                      º
ÈÍÍÍÍÍÍÍÍÍÍÍÍÍÍÍÍÍÍÍÍÍÍÍÍÍÍÍÍÍÍÍÍÍÍÍÍÍÍ¼

ÉÍÍÍÍÍÍÍÍÍÍÍÍÍÍÍÍÍÍÍÍÍÍÍÍÍÍÍÍÍÍÍÍÍÍÍÍÍÍ»
º       CONTROLLER START/FLASH DATA      º
º                                        º
ºREMOTE FLASH OPTIONS:                   º
º                                        º
ºOUT OF FLASH YELLOW..... X              º
ºOUT OF FLASH ALL RED..... .             º
ºMINIMUM RECALL.......... .              º
ºSPARE................... .              º
ºFLASH THRU LOAD SWITCHES.... .          º
ºCYCLE THROUGH PHASES..... .             º
º                                        º
º                                        º
º                                        º
º                                        º
º                                        º
ºEND OF SUBMENU                          º
ÈÍÍÍÍÍÍÍÍÍÍÍÍÍÍÍÍÍÍÍÍÍÍÍÍÍÍÍÍÍÍÍÍÍÍÍÍÍÍ¼

ÉÍÍÍÍÍÍÍÍÍÍÍÍÍÍÍÍÍÍÍÍÍÍÍÍÍÍÍÍÍÍÍÍÍÍÍÍÍÍ»
º           NO SERVE PHASES              º
ºCANNOT SERVE WITH: 1 1 1                º
ºPHASE              2 1 0 9 8 7 6 5 4 3 2º
º  1                . . . . . . . . . . .º
º  2                . . . . . . . . . .  º
º  3                . . . . . . . . .    º
º  4                . . . . . . . .      º
º  5                . . . . . . .        º
º  6                . . . . . .          º
º  7                . . . . .            º
º  8                . . . .              º
º  9                . . .                º
º 10                . .                  º
º 11                .                    º
```

```
º                                                  º
ºEND OF SUBMENU                                    º
ÈÍÍÍÍÍÍÍÍÍÍÍÍÍÍÍÍÍÍÍÍÍÍÍÍÍÍÍÍÍÍÍÍÍÍÍÍÍÍÍÍÍÍÍÍ¼

ÉÍÍÍÍÍÍÍÍÍÍÍÍÍÍÍÍÍÍÍÍÍÍÍÍÍÍÍÍÍÍÍÍÍÍÍÍÍÍÍÍÍÍ»
º                  DIMMING                         º
º                                                  º
ºLOAD SWITCH....  1..2..3..4..5..6..7..8 º
ºDIM GRN/WLK....  .  .  .  .  .  .  .  . º
ºDIM YEL/PC.....  .  .  .  .  .  .  .  . º
ºDIM RED/DW.....  .  .  .  .  .  .  .  . º
º                                                  º
ºLOAD SWITCH....  9.10.11.12.13.14.15.16 º
ºDIM GRN/WLK....  .  .  .  .  .  .  .  . º
ºDIM YEL/PC.....  .  .  .  .  .  .  .  . º
ºDIM RED/DW.....  .  .  .  .  .  .  .  . º
º                                                  º
º                                                  º
º                                                  º
º                                                  º
ºEND OF SUBMENU                                    º
ÈÍÍÍÍÍÍÍÍÍÍÍÍÍÍÍÍÍÍÍÍÍÍÍÍÍÍÍÍÍÍÍÍÍÍÍÍÍÍÍÍÍÍÍÍ¼

ÉÍÍÍÍÍÍÍÍÍÍÍÍÍÍÍÍÍÍÍÍÍÍÍÍÍÍÍÍÍÍÍÍÍÍÍÍÍÍÍÍÍÍ»
º          CONTROLLER OPTION DATA                  º
º                                          1 1 1º
ºPHASE.........  1 2 3 4 5 6 7 8 9 0 1 2º
ºGUAR PASSAGE...  . . . . . . . . . . . . º
ºNONACTUATED I..  . X . . . . . . . . . . º
ºNONACTUATED II.  . . . X . . . X . . . . º
ºDUAL ENTRY.....  . . . . . . . . . . . . º
ºCOND SERVICE...  . . . . . . . . . . . . º
ºCOND RESERVICE.  . . . . . . . . . . . . º
ºREST IN WALK...  . . . . . . . . . . . . º
ºFLASHING WALK..  . . . . . . . . . . . . º
º                                                  º
º----- FIVE SECTION LEFT TURN HEADS -----º
º   5-2 :  .     7-4 :  .     1-6 :  .   º
º   3-8 :  .    11-10:  .    9-12 :  .   º
ºADDITIONAL PAGE(S)                                º
ÈÍÍÍÍÍÍÍÍÍÍÍÍÍÍÍÍÍÍÍÍÍÍÍÍÍÍÍÍÍÍÍÍÍÍÍÍÍÍÍÍÍÍÍÍ¼
♀
ÉÍÍÍÍÍÍÍÍÍÍÍÍÍÍÍÍÍÍÍÍÍÍÍÍÍÍÍÍÍÍÍÍÍÍÍÍÍÍÍÍÍÍ»
º          CONTROLLER OPTION DATA                  º
ºDUAL ENTRY..................... OFF    º
ºCOND SERVICE ENABLE............ OFF    º
ºCOND SERVICE DET X SWITCHING.... OFF    º
ºPED CLR PROTECT................ OFF    º
ºSPEC PREEMPT OVLP FLASH........ OFF    º
ºLOCK DETECTORS IN RED ONLY..... OFF    º
ºRESERVED....................... OFF    º
ºRESERVED....................... OFF    º
ºBACKUP PROTECTION GROUP 1...... OFF    º
ºBACKUP PROTECTION GROUP 2...... OFF    º
ºBACKUP PROTECTION GROUP 3...... OFF    º
ºSIMULTANEOUS GAP GROUP 1....... OFF    º
ºSIMULTANEOUS GAP GROUP 2....... OFF    º
ºSIMULTANEOUS GAP GROUP 3....... OFF    º
ºEND OF SUBMENU                                    º
ÈÍÍÍÍÍÍÍÍÍÍÍÍÍÍÍÍÍÍÍÍÍÍÍÍÍÍÍÍÍÍÍÍÍÍÍÍÍÍÍÍÍÍÍÍ¼
♀
ÉÍÍÍÍÍÍÍÍÍÍÍÍÍÍÍÍÍÍÍÍÍÍÍÍÍÍÍÍÍÍÍÍÍÍÍÍÍÍÍÍÍÍ»
º****************************************º
```

```
º*   ECONOLITE CONTROL PRODUCTS, INC.   *º
º*             ASC/2-2000               *º
º*          Copyright (C) 1992          *º
º*                                      *º
º* City of Ontario, Traffic Engineering *º
º*  ASC/2-2100  Configuration Ver. 1.1  *º
º*                                      *º
º*   SOFTWARE ASSY              VERSION  *º
º*   BOOT            32783        1.28  *º
º*   MAIN PROGRAM    34556        1.77  *º
º*   HELP            32789        1.62  *º
º*   CONFIGURATION   32791 (32K) C8145  *º
º*                                      *º
º*                                      *º
º****************************************º
ÈÍÍÍÍÍÍÍÍÍÍÍÍÍÍÍÍÍÍÍÍÍÍÍÍÍÍÍÍÍÍÍÍÍÍÍÍÍÍ¼

ÉÍÍÍÍÍÍÍÍÍÍÍÍÍÍÍÍÍÍÍÍÍÍÍÍÍÍÍÍÍÍÍÍÍÍÍÍÍÍ»
º          COORDINATOR OPTIONS           º
º                                        º
ºSPLIT UNITS..     %    ACT CRD PHASE..  .º
ºOFFSET UNITS.     %    ACT WALK/REST..  .º
ºINTERCNT FMT.   STD    INHIBIT MAX....  .º
ºINTERCNT SRC.   NIC    MAX2 SELECT....  .º
ºRESYNC COUNT.     0    MULTISYNC......  .º
ºTRANSITION...   SMOOTH FLOAT FORCE OFF  .º
ºDWELL PERIOD.     0%                    º
º                                        º
º                                        º
º                            A B C D E F º
ºFREE ALTERNATE SEQUENCE     . . . . . . º
º                                        º
º                                        º
ºEND OF SUBMENU                          º
ÈÍÍÍÍÍÍÍÍÍÍÍÍÍÍÍÍÍÍÍÍÍÍÍÍÍÍÍÍÍÍÍÍÍÍÍÍÍÍ¼

ÉÍÍÍÍÍÍÍÍÍÍÍÍÍÍÍÍÍÍÍÍÍÍÍÍÍÍÍÍÍÍÍÍÍÍÍÍÍÍ»
º      COORD MANUAL AND SPLIT DEMAND     º
º                                        º
ºMANUAL ENABLE:  ON    MANUAL PATTERN   0º
º                                        º
º----------------------------------------º
º                                        º
ºSPLIT DEMAND:       DEMAND 1  DEMAND 2  º
ºDEMAND CALL TIME        0s        0s    º
ºDEMAND CYCLE COUNT      0         0     º
º                                        º
º                                  1 1 1º
ºDEMAND PHASE:    1 2 3 4 5 6 7 8 9 0 1 2º
ºDEMAND 1 PHASES  . . . . . . . . . . . .º
ºDEMAND 2 PHASES  . . . . . . . . . . . .º
º                                        º
ºEND OF SUBMENU                          º
ÈÍÍÍÍÍÍÍÍÍÍÍÍÍÍÍÍÍÍÍÍÍÍÍÍÍÍÍÍÍÍÍÍÍÍÍÍÍÍ¼

ÉÍÍÍÍÍÍÍÍÍÍÍÍÍÍÍÍÍÍÍÍÍÍÍÍÍÍÍÍÍÍÍÍÍÍÍÍÍÍ»
º        COORD AUTO PERM MIN GREEN       º
º                                        º
º        PHASE   AUTO PERM MIN GRN       º
º          1              0s             º
º          2              0s             º
º          3              0s             º
º          4              0s             º
```

```
º          5              0s             º
º          6              0s             º
º          7              0s             º
º          8              0s             º
º          9              0s             º
º         10              0s             º
º         11              0s             º
º         12              0s             º
ºEND OF SUBMENU                          º
ÈÍÍÍÍÍÍÍÍÍÍÍÍÍÍÍÍÍÍÍÍÍÍÍÍÍÍÍÍÍÍÍÍÍÍÍÍÍÍÍÍÍÍ¼

ÉÍÍÍÍÍÍÍÍÍÍÍÍÍÍÍÍÍÍÍÍÍÍÍÍÍÍÍÍÍÍÍÍÍÍÍÍÍÍÍÍÍÍ»
ºCOORD PATTERN 31                        º
º                                        º
ºCYCLE LENGTH..... 100s  C/O/S.....  411 º
ºOFFSET...........  26%                  º
ºSPLITS:                                 º
ºPHASE  1)  0%   2) 35%   3) 25%   4) 40%º
ºPHASE  5)  0%   6)  0%   7)  0%   8) 65%º
ºPHASE  9)  0%  10)  0%  11)  0%  12)  0%º
º                                        º
ºVEH PERMISSIVE.......  [1]   0% [2]   0%º
ºVEH PERM 2 DISP.....    0%              º
ºPHASE RESERVICE.....    .               º
ºSPLIT EXTENSION/RING.  [1]   0% [2]   0%º
ºSPL DMD PATTERN......  [1]   0  [2]   0 º
ºXARTERY PATTERN.....    0               º
ºADDITIONAL SCREEN(S)                    º
ÈÍÍÍÍÍÍÍÍÍÍÍÍÍÍÍÍÍÍÍÍÍÍÍÍÍÍÍÍÍÍÍÍÍÍÍÍÍÍÍÍÍÍ¼

ÉÍÍÍÍÍÍÍÍÍÍÍÍÍÍÍÍÍÍÍÍÍÍÍÍÍÍÍÍÍÍÍÍÍÍÍÍÍÍÍÍÍÍ»
º                              1 1 1     º
ºPHASE            1 2 3 4 5 6 7 8 9 0 1 2º
ºCOORD PHASES     . . . X . . . X . . . .º
ºVEHICLE RECALL   . . . . . . . . . . . .º
ºVEH MAX RECALL   . . . . . . . . . . . .º
ºPED RECALL       . . . . . . . . . . . .º
ºPHASE OMIT       . . . . . . . . . . . .º
ºSPARE            . . . . . . . . . . . .º
º                                        º
º                 A B C D E F            º
ºALT SEQUENCE:    . X . . . .            º
º                                        º
º                                        º
º                                        º
º                                        º
ºADDITIONAL SCREEN(S)                    º
ÈÍÍÍÍÍÍÍÍÍÍÍÍÍÍÍÍÍÍÍÍÍÍÍÍÍÍÍÍÍÍÍÍÍÍÍÍÍÍÍÍÍÍ¼

ÉÍÍÍÍÍÍÍÍÍÍÍÍÍÍÍÍÍÍÍÍÍÍÍÍÍÍÍÍÍÍÍÍÍÍÍÍÍÍÍÍÍÍ»
ºCOORD PATTERN 33                        º
º                                        º
ºCYCLE LENGTH..... 100s  C/O/S.....  611 º
ºOFFSET...........  36%                  º
ºSPLITS:                                 º
ºPHASE  1)  0%   2) 22%   3) 27%   4) 51%º
ºPHASE  5)  0%   6)  0%   7)  0%   8) 78%º
ºPHASE  9)  0%  10)  0%  11)  0%  12)  0%º
º                                        º
ºVEH PERMISSIVE.......  [1]   0% [2]   0%º
ºVEH PERM 2 DISP.....    0%              º
ºPHASE RESERVICE.....    .               º
ºSPLIT EXTENSION/RING.  [1]   0% [2]   0%º
```

```
ºSPL DMD PATTERN......  [1]   0  [2]   0 º
ºXARTERY PATTERN.....   0          º
ºADDITIONAL SCREEN(S)              º
ÈÍÍÍÍÍÍÍÍÍÍÍÍÍÍÍÍÍÍÍÍÍÍÍÍÍÍÍÍÍÍÍÍÍÍÍÍÍÍ¼

ÉÍÍÍÍÍÍÍÍÍÍÍÍÍÍÍÍÍÍÍÍÍÍÍÍÍÍÍÍÍÍÍÍÍÍÍÍÍÍ»
º                                  1 1 1º
ºPHASE            1 2 3 4 5 6 7 8 9 0 1 2º
ºCOORD PHASES     . . . X . . . X . . . .º
ºVEHICLE RECALL   . . . . . . . . . . . .º
ºVEH MAX RECALL   . . . . . . . . . . . .º
ºPED RECALL       . . . . . . . . . . . .º
ºPHASE OMIT       . . . . . . . . . . . .º
ºSPARE            . . . . . . . . . . . .º
º                                        º
º                 A B C D E F            º
ºALT SEQUENCE:    . X . . . .            º
º                                        º
º                                        º
º                                        º
º                                        º
ºADDITIONAL SCREEN(S)                    º
ÈÍÍÍÍÍÍÍÍÍÍÍÍÍÍÍÍÍÍÍÍÍÍÍÍÍÍÍÍÍÍÍÍÍÍÍÍÍÍ¼

ÉÍÍÍÍÍÍÍÍÍÍÍÍÍÍÍÍÍÍÍÍÍÍÍÍÍÍÍÍÍÍÍÍÍÍÍÍÍÍ»
ºCOORD PATTERN 51                        º
º                                        º
ºCYCLE LENGTH..... 100s  C/O/S.....  411 º
ºOFFSET...........  26%                  º
ºSPLITS:                                 º
ºPHASE  1)  0%   2) 35%   3) 25%   4) 40%º
ºPHASE  5)  0%   6)  0%   7)  0%   8) 65%º
ºPHASE  9)  0%  10)  0%  11)  0%  12)  0%º
º                                        º
ºVEH PERMISSIVE.......  [1]   0% [2]   0%º
ºVEH PERM 2 DISP......... 0%             º
ºPHASE RESERVICE.........  .             º
ºSPLIT EXTENSION/RING.  [1]   0% [2]   0%º
ºSPL DMD PATTERN......  [1]   0  [2]   0 º
ºXARTERY PATTERN.....   0          º
ºADDITIONAL SCREEN(S)              º
ÈÍÍÍÍÍÍÍÍÍÍÍÍÍÍÍÍÍÍÍÍÍÍÍÍÍÍÍÍÍÍÍÍÍÍÍÍÍÍ¼

ÉÍÍÍÍÍÍÍÍÍÍÍÍÍÍÍÍÍÍÍÍÍÍÍÍÍÍÍÍÍÍÍÍÍÍÍÍÍÍ»
º                                  1 1 1º
ºPHASE            1 2 3 4 5 6 7 8 9 0 1 2º
ºCOORD PHASES     . . . X . . . X . . . .º
ºVEHICLE RECALL   . . . . . . . . . . . .º
ºVEH MAX RECALL   . . . . . . . . . . . .º
ºPED RECALL       . . . . . . . . . . . .º
ºPHASE OMIT       . . . . . . . . . . . .º
ºSPARE            . . . . . . . . . . . .º
º                                        º
º                 A B C D E F            º
ºALT SEQUENCE:    . . . . . .            º
º                                        º
º                                        º
º                                        º
º                                        º
ºADDITIONAL SCREEN(S)                    º
ÈÍÍÍÍÍÍÍÍÍÍÍÍÍÍÍÍÍÍÍÍÍÍÍÍÍÍÍÍÍÍÍÍÍÍÍÍÍÍ¼

ÉÍÍÍÍÍÍÍÍÍÍÍÍÍÍÍÍÍÍÍÍÍÍÍÍÍÍÍÍÍÍÍÍÍÍÍÍÍÍ»
```

```
ºCOORD PATTERN 53                                 º
º                                                 º
ºCYCLE LENGTH..... 100s  C/O/S.....  611 º
ºOFFSET.....  14%                                 º
ºSPLITS:                                          º
ºPHASE  1)  0%   2) 22%   3) 27%   4) 51%º
ºPHASE  5)  0%   6)  0%   7)  0%   8) 78%º
ºPHASE  9)  0%  10)  0%  11)  0%  12)  0%º
º                                                 º
ºVEH PERMISSIVE.......  [1]   0% [2]   0%º
ºVEH PERM 2 DISP.....   0%                       º
ºPHASE RESERVICE.....   .                        º
ºSPLIT EXTENSION/RING.  [1]   0% [2]   0%º
ºSPL DMD PATTERN......  [1]   0  [2]   0 º
ºXARTERY PATTERN.....   0                        º
ºADDITIONAL SCREEN(S)                             º
ÈÍÍÍÍÍÍÍÍÍÍÍÍÍÍÍÍÍÍÍÍÍÍÍÍÍÍÍÍÍÍÍÍÍÍÍÍÍÍÍÍÍÍ¼

ÉÍÍÍÍÍÍÍÍÍÍÍÍÍÍÍÍÍÍÍÍÍÍÍÍÍÍÍÍÍÍÍÍÍÍÍÍÍÍÍÍÍÍ»
º                                    1 1 1º
ºPHASE            1 2 3 4 5 6 7 8 9 0 1 2º
ºCOORD PHASES     . . . X . . . X . . . .º
ºVEHICLE RECALL   . . . . . . . . . . . .º
ºVEH MAX RECALL   . . . . . . . . . . . .º
ºPED RECALL       . . . . . . . . . . . .º
ºPHASE OMIT       . . . . . . . . . . . .º
ºSPARE            . . . . . . . . . . . .º
º                                         º
º                 A B C D E F             º
ºALT SEQUENCE:    . X . . . .             º
º                                         º
º                                         º
º                                         º
º                                         º
ºADDITIONAL SCREEN(S)                     º
ÈÍÍÍÍÍÍÍÍÍÍÍÍÍÍÍÍÍÍÍÍÍÍÍÍÍÍÍÍÍÍÍÍÍÍÍÍÍÍÍÍÍÍ¼

ÉÍÍÍÍÍÍÍÍÍÍÍÍÍÍÍÍÍÍÍÍÍÍÍÍÍÍÍÍÍÍÍÍÍÍÍÍÍÍÍÍÍÍ»
º*****************************************º
º*   ECONOLITE CONTROL PRODUCTS, INC.    *º
º*            ASC/2-2000                 *º
º*          Copyright (C) 1992           *º
º*                                       *º
º* City of Ontario, Traffic Engineering *º
º*  ASC/2-2100  Configuration Ver. 1.1   *º
º*                                       *º
º*   SOFTWARE ASSY            VERSION    *º
º*   BOOT           32783        1.28    *º
º*   MAIN PROGRAM   34556        1.77    *º
º*   HELP           32789        1.62    *º
º*   CONFIGURATION  32791 (32K) C8145    *º
º*                                       *º
º*                                       *º
º*****************************************º
ÈÍÍÍÍÍÍÍÍÍÍÍÍÍÍÍÍÍÍÍÍÍÍÍÍÍÍÍÍÍÍÍÍÍÍÍÍÍÍÍÍÍÍ¼

ÉÍÍÍÍÍÍÍÍÍÍÍÍÍÍÍÍÍÍÍÍÍÍÍÍÍÍÍÍÍÍÍÍÍÍÍÍÍÍÍÍÍÍ»
ºPRIORITY PREEMPTOR 1                1 1 1º
ºPHASE.....  1 2 3 4 5 6 7 8 9 0 1 2º
ºTERM PHASE OVLP  . . . . . . . . . . . .º
ºTRK CLR PHASE..  . . . . . . . . . . . .º
ºHOLD PHASES....  . . . X . . . . . . . .º
ºEXIT PHASES....  . . . . . . . . . . . .º
```

```
ºEXIT CALLS.....  . . . . . .º
ºSPARE..........  . . . . . .º
ºTERM OVERLAP...   A: .  B: .  C: .  D: .º
º                                         º
ºACTIVE.........YES  PED DARK....... NO   º
ºPRIORITY....... NO  PED ACTIVE..... NO   º
ºDET LOCK....... NO  ZERO PC TIME... NO   º
ºHOLD FLASH..... NO  PC THRU YELLOW. NO   º
ºTERM OVLP ASAP. NO  TERM PHASES.... NO   º
ºADDITIONAL PAGE(S)                       º
ÈÍÍÍÍÍÍÍÍÍÍÍÍÍÍÍÍÍÍÍÍÍÍÍÍÍÍÍÍÍÍÍÍÍÍÍÍÍÍÍÍÍÍ¼

ÉÍÍÍÍÍÍÍÍÍÍÍÍÍÍÍÍÍÍÍÍÍÍÍÍÍÍÍÍÍÍÍÍÍÍÍÍÍÍÍÍÍÍ»
º          PRIORITY PREEMPTOR 1           º
º                                         º
ºDON'T OVERRIDE FLASH.....  X             º
ºFLASH ALL OUTPUTS........  .             º
ºYELLOW-RED GOES GREEN....  .             º
ºENABLE MAX PREEMPT TIME..  X             º
ºACTIVE ONLY DURING HOLD..  .             º
ºNO CVM IN FLASH..........  .             º
ºFAST FLASH GRN ON HOLD...  X             º
ºOUT OF FLASH.............  GREEN         º
º                                         º
º                                         º
º                                         º
º                                         º
º                                         º
ºADDITIONAL PAGE(S)                       º
ÈÍÍÍÍÍÍÍÍÍÍÍÍÍÍÍÍÍÍÍÍÍÍÍÍÍÍÍÍÍÍÍÍÍÍÍÍÍÍÍÍÍÍ¼

ÉÍÍÍÍÍÍÍÍÍÍÍÍÍÍÍÍÍÍÍÍÍÍÍÍÍÍÍÍÍÍÍÍÍÍÍÍÍÍÍÍÍÍ»
º          PRIORITY PREEMPTOR 1           º
º                                         º
ºMAX TIME..... 45  DURATION TIME..  0     º
ºMIN HOLD TIME.  0  DELAY TIME.....  0     º
ºMIN PED CLEAR.  0  INHIBIT TIME...  0     º
ºEXIT MAX......  0  HLD DELAY TIME.  0     º
º                                         º
º                GRN  YEL  RED            º
ºMINIMUM.......    0  0.0  0.0            º
ºTRACK CLEAR...    0  0.0  0.0            º
ºHOLD..........       0.0  0.0            º
º                                         º
º                                         º
º                                         º
º                                         º
ºEND OF SUBMENU                           º
ÈÍÍÍÍÍÍÍÍÍÍÍÍÍÍÍÍÍÍÍÍÍÍÍÍÍÍÍÍÍÍÍÍÍÍÍÍÍÍÍÍÍÍ¼

ÉÍÍÍÍÍÍÍÍÍÍÍÍÍÍÍÍÍÍÍÍÍÍÍÍÍÍÍÍÍÍÍÍÍÍÍÍÍÍÍÍÍÍ»
ºPRIORITY PREEMPTOR 2              1 1 1º
ºPHASE.........  1 2 3 4 5 6 7 8 9 0 1 2º
ºTERM PHASE OVLP  . . . . . .º
ºTRK CLR PHASE..  . . . . . .º
ºHOLD PHASES....  . . X . . . X . . . .º
ºEXIT PHASES....  . . . . . .º
ºEXIT CALLS.....  . . . . . .º
ºSPARE..........  . . . . . .º
ºTERM OVERLAP...   A: .  B: .  C: .  D: .º
º                                         º
ºACTIVE.........YES  PED DARK....... NO   º
ºPRIORITY....... NO  PED ACTIVE..... NO   º
```

```
ºDET LOCK....... NO  ZERO PC TIME... NO  º
ºHOLD FLASH..... NO  PC THRU YELLOW. NO  º
ºTERM OVLP ASAP. NO  TERM PHASES.... NO  º
ºADDITIONAL PAGE(S)                      º
ÈÍÍÍÍÍÍÍÍÍÍÍÍÍÍÍÍÍÍÍÍÍÍÍÍÍÍÍÍÍÍÍÍÍÍÍÍÍ¼

ÉÍÍÍÍÍÍÍÍÍÍÍÍÍÍÍÍÍÍÍÍÍÍÍÍÍÍÍÍÍÍÍÍÍÍÍÍÍ»
º          PRIORITY PREEMPTOR 2          º
º                                        º
ºDON'T OVERRIDE FLASH.....  X            º
ºFLASH ALL OUTPUTS........  .            º
ºYELLOW-RED GOES GREEN....  .            º
ºENABLE MAX PREEMPT TIME..  X            º
ºACTIVE ONLY DURING HOLD..  .            º
ºNO CVM IN FLASH..........  .            º
ºFAST FLASH GRN ON HOLD...  X            º
ºOUT OF FLASH.............  GREEN        º
º                                        º
º                                        º
º                                        º
º                                        º
º                                        º
ºADDITIONAL PAGE(S)                      º
ÈÍÍÍÍÍÍÍÍÍÍÍÍÍÍÍÍÍÍÍÍÍÍÍÍÍÍÍÍÍÍÍÍÍÍÍÍÍ¼

ÉÍÍÍÍÍÍÍÍÍÍÍÍÍÍÍÍÍÍÍÍÍÍÍÍÍÍÍÍÍÍÍÍÍÍÍÍÍ»
º          PRIORITY PREEMPTOR 2          º
º                                        º
ºMAX TIME..... 45  DURATION TIME..  0    º
ºMIN HOLD TIME.  0  DELAY TIME.....  0    º
ºMIN PED CLEAR.  0  INHIBIT TIME...  0    º
ºEXIT MAX.....   0  HLD DELAY TIME.  0    º
º                                        º
º                GRN  YEL  RED           º
ºMINIMUM.......    0  0.0  0.0           º
ºTRACK CLEAR...    0  0.0  0.0           º
ºHOLD..........       0.0  0.0           º
º                                        º
ºLINKED PREEMPTOR.....  0                º
º                                        º
º                                        º
ºEND OF SUBMENU                          º
ÈÍÍÍÍÍÍÍÍÍÍÍÍÍÍÍÍÍÍÍÍÍÍÍÍÍÍÍÍÍÍÍÍÍÍÍÍÍ¼

ÉÍÍÍÍÍÍÍÍÍÍÍÍÍÍÍÍÍÍÍÍÍÍÍÍÍÍÍÍÍÍÍÍÍÍÍÍÍ»
ºPRIORITY PREEMPTOR 3              1 1 1º
ºPHASE.........  1 2 3 4 5 6 7 8 9 0 1 2º
ºTERM PHASE OVLP  . . . . . . . . . . . .º
ºTRK CLR PHASE..  . . . . . . . . . . . .º
ºHOLD PHASES....  . . . X . . . . . . . .º
ºEXIT PHASES....  . . . . . . . . . . . .º
ºEXIT CALLS.....  . . . . . . . . . . . .º
ºSPARE..........  . . . . . . . . . . . .º
ºTERM OVERLAP...   A: .  B: .  C: .  D: .º
º                                        º
ºACTIVE.........YES  PED DARK....... NO  º
ºPRIORITY....... NO  PED ACTIVE..... NO  º
ºDET LOCK....... NO  ZERO PC TIME... NO  º
ºHOLD FLASH..... NO  PC THRU YELLOW. NO  º
ºTERM OVLP ASAP. NO  TERM PHASES.... NO  º
ºADDITIONAL PAGE(S)                      º
ÈÍÍÍÍÍÍÍÍÍÍÍÍÍÍÍÍÍÍÍÍÍÍÍÍÍÍÍÍÍÍÍÍÍÍÍÍÍ¼
```

```
É͸͸͸͸͸͸͸͸͸͸͸͸͸͸͸͸͸͸͸͸͸͸͸͸͸͸͸͸͸͸͸͸͸͸͸͸͸»
º          PRIORITY PREEMPTOR 3          º
º                                        º
ºDON'T OVERRIDE FLASH.....  X            º
ºFLASH ALL OUTPUTS........  .            º
ºYELLOW-RED GOES GREEN....  .            º
ºENABLE MAX PREEMPT TIME..  X            º
ºACTIVE ONLY DURING HOLD..  .            º
ºNO CVM IN FLASH..........  .            º
ºFAST FLASH GRN ON HOLD...  .            º
ºOUT OF FLASH.............  GREEN        º
º                                        º
º                                        º
º                                        º
º                                        º
º                                        º
ºADDITIONAL PAGE(S)                      º
È͸͸͸͸͸͸͸͸͸͸͸͸͸͸͸͸͸͸͸͸͸͸͸͸͸͸͸͸͸͸͸͸͸͸͸͸͸¼

♀

É͸͸͸͸͸͸͸͸͸͸͸͸͸͸͸͸͸͸͸͸͸͸͸͸͸͸͸͸͸͸͸͸͸͸͸͸͸»
º          PRIORITY PREEMPTOR 3          º
º                                        º
ºMAX TIME..... 90  DURATION TIME..  0    º
ºMIN HOLD TIME.  0  DELAY TIME.....  0   º
ºMIN PED CLEAR.  0  INHIBIT TIME...  0   º
ºEXIT MAX......  0  HLD DELAY TIME.  0   º
º                                        º
º                GRN  YEL  RED           º
ºMINIMUM.......    0  0.0  0.0           º
ºTRACK CLEAR...    0  0.0  0.0           º
ºHOLD..........       0.0  0.0           º
º                                        º
ºLINKED PREEMPTOR.....  0                º
º                                        º
º                                        º
ºEND OF SUBMENU                          º
È͸͸͸͸͸͸͸͸͸͸͸͸͸͸͸͸͸͸͸͸͸͸͸͸͸͸͸͸͸͸͸͸͸͸͸͸͸¼

É͸͸͸͸͸͸͸͸͸͸͸͸͸͸͸͸͸͸͸͸͸͸͸͸͸͸͸͸͸͸͸͸͸͸͸͸͸»
º          PRIORITY PREEMPTOR 4     1 1 1º
ºPHASE.........  1 2 3 4 5 6 7 8 9 0 1 2º
ºTERM PHASE OVLP  . . . . . . . . . . . .º
ºTRK CLR PHASE..  . . . . . . . . . . . .º
ºHOLD PHASES....  . . . X . . . . . . . .º
ºEXIT PHASES....  . . . . . . . . . . . .º
ºEXIT CALLS.....  . . . . . . . . . . . .º
ºSPARE.........  . . . . . . . . . . . .º
ºTERM OVERLAP...   A: .  B: .  C: .  D: .º
º                                        º
ºACTIVE.........YES  PED DARK....... NO  º
ºPRIORITY....... NO  PED ACTIVE..... NO  º
ºDET LOCK....... NO  ZERO PC TIME... NO  º
ºHOLD FLASH..... NO  PC THRU YELLOW. NO  º
ºTERM OVLP ASAP. NO  TERM PHASES.... NO  º
ºADDITIONAL PAGE(S)                      º
È͸͸͸͸͸͸͸͸͸͸͸͸͸͸͸͸͸͸͸͸͸͸͸͸͸͸͸͸͸͸͸͸͸͸͸͸͸¼

É͸͸͸͸͸͸͸͸͸͸͸͸͸͸͸͸͸͸͸͸͸͸͸͸͸͸͸͸͸͸͸͸͸͸͸͸͸»
º          PRIORITY PREEMPTOR 4          º
º                                        º
ºDON'T OVERRIDE FLASH.....  .            º
ºFLASH ALL OUTPUTS........  .            º
ºYELLOW-RED GOES GREEN....  .            º
```

```
ºENABLE MAX PREEMPT TIME..  .            º
ºACTIVE ONLY DURING HOLD..  .            º
ºNO CVM IN FLASH..........  .            º
ºFAST FLASH GRN ON HOLD...  .            º
ºOUT OF FLASH.............  GREEN        º
º                                        º
º                                        º
º                                        º
º                                        º
º                                        º
ºADDITIONAL PAGE(S)                      º
ÈÍÍÍÍÍÍÍÍÍÍÍÍÍÍÍÍÍÍÍÍÍÍÍÍÍÍÍÍÍÍÍÍÍÍÍÍÍÍ¼
```

♀

```
ÉÍÍÍÍÍÍÍÍÍÍÍÍÍÍÍÍÍÍÍÍÍÍÍÍÍÍÍÍÍÍÍÍÍÍÍÍÍÍ»
º          PRIORITY PREEMPTOR 4          º
º                                        º
ºMAX TIME......  0  DURATION TIME..  0    º
ºMIN HOLD TIME.  0  DELAY TIME.....  0    º
ºMIN PED CLEAR.  0  INHIBIT TIME...  0    º
ºEXIT MAX......  0  HLD DELAY TIME.  0    º
º                                        º
º                GRN  YEL  RED           º
ºMINIMUM.......    0  0.0  0.0           º
ºTRACK CLEAR...    0  0.0  0.0           º
ºHOLD..........       0.0  0.0           º
º                                        º
ºLINKED PREEMPTOR.....  0                º
º                                        º
º                                        º
ºEND OF SUBMENU                          º
ÈÍÍÍÍÍÍÍÍÍÍÍÍÍÍÍÍÍÍÍÍÍÍÍÍÍÍÍÍÍÍÍÍÍÍÍÍÍÍ¼

ÉÍÍÍÍÍÍÍÍÍÍÍÍÍÍÍÍÍÍÍÍÍÍÍÍÍÍÍÍÍÍÍÍÍÍÍÍÍÍ»
ºPRIORITY PREEMPTOR 5              1 1 1º
ºPHASE.........  1 2 3 4 5 6 7 8 9 0 1 2º
ºTERM PHASE OVLP  . . . . . . . . . . . .º
ºTRK CLR PHASE..  . . . . . . . . . . . .º
ºHOLD PHASES....  . . . . . . . . . . . .º
ºEXIT PHASES....  . . . . . . . . . . . .º
ºEXIT CALLS.....  . . . . . . . . . . . .º
ºSPARE..........  . . . . . . . . . . . .º
ºTERM OVERLAP...   A: .  B: .  C: .  D: .º
º                                        º
ºACTIVE.........YES  PED DARK....... NO  º
ºPRIORITY....... NO  PED ACTIVE..... NO  º
ºDET LOCK....... NO  ZERO PC TIME... NO  º
ºHOLD FLASH..... NO  PC THRU YELLOW. NO  º
ºTERM OVLP ASAP. NO  TERM PHASES.... NO  º
ºADDITIONAL PAGE(S)                      º
ÈÍÍÍÍÍÍÍÍÍÍÍÍÍÍÍÍÍÍÍÍÍÍÍÍÍÍÍÍÍÍÍÍÍÍÍÍÍÍ¼

ÉÍÍÍÍÍÍÍÍÍÍÍÍÍÍÍÍÍÍÍÍÍÍÍÍÍÍÍÍÍÍÍÍÍÍÍÍÍÍ»
º          PRIORITY PREEMPTOR 5          º
º                                        º
ºDON'T OVERRIDE FLASH.....  X            º
ºFLASH ALL OUTPUTS........  .            º
ºYELLOW-RED GOES GREEN....  .            º
ºENABLE MAX PREEMPT TIME..  X            º
ºACTIVE ONLY DURING HOLD..  .            º
ºNO CVM IN FLASH..........  .            º
ºFAST FLASH GRN ON HOLD...  .            º
ºOUT OF FLASH.............  GREEN        º
º                                        º
```

```
º                                          º
º                                          º
º                                          º
º                                          º
ºADDITIONAL PAGE(S)                        º
ÈÍÍÍÍÍÍÍÍÍÍÍÍÍÍÍÍÍÍÍÍÍÍÍÍÍÍÍÍÍÍÍÍÍÍÍÍÍ¼

ÉÍÍÍÍÍÍÍÍÍÍÍÍÍÍÍÍÍÍÍÍÍÍÍÍÍÍÍÍÍÍÍÍÍÍÍÍÍ»
º          PRIORITY PREEMPTOR 5            º
º                                          º
ºMAX TIME..... 45  DURATION TIME..  0      º
ºMIN HOLD TIME.  0  DELAY TIME.....  0      º
ºMIN PED CLEAR.  0  INHIBIT TIME...  0      º
ºEXIT MAX......  0  HLD DELAY TIME.  0      º
º                                          º
º                GRN  YEL  RED             º
ºMINIMUM.......    0  0.0  0.0             º
ºTRACK CLEAR...    0  0.0  0.0             º
ºHOLD.........        0.0  0.0             º
º                                          º
ºLINKED PREEMPTOR.....  0                  º
º                                          º
º                                          º
ºEND OF SUBMENU                            º
ÈÍÍÍÍÍÍÍÍÍÍÍÍÍÍÍÍÍÍÍÍÍÍÍÍÍÍÍÍÍÍÍÍÍÍÍÍÍ¼

ÉÍÍÍÍÍÍÍÍÍÍÍÍÍÍÍÍÍÍÍÍÍÍÍÍÍÍÍÍÍÍÍÍÍÍÍÍÍ»
ºPRIORITY PREEMPTOR 6              1 1 1º
ºPHASE.........  1 2 3 4 5 6 7 8 9 0 1 2º
ºTERM PHASE OVLP  . . . . . . . . . . . .º
ºTRK CLR PHASE..  . . . . . . . . . . . .º
ºHOLD PHASES....  . . . . . . . . . . . .º
ºEXIT PHASES....  . . . . . . . . . . . .º
ºEXIT CALLS.....  . . . . . . . . . . . .º
ºSPARE.........  . . . . . . . . . . . .º
ºTERM OVERLAP...   A: .  B: .  C: .  D: .º
º                                          º
ºACTIVE.........YES  PED DARK....... NO    º
ºPRIORITY....... NO  PED ACTIVE..... NO    º
ºDET LOCK....... NO  ZERO PC TIME... NO    º
ºHOLD FLASH..... NO  PC THRU YELLOW. NO    º
ºTERM OVLP ASAP. NO  TERM PHASES.... NO    º
ºADDITIONAL PAGE(S)                        º
ÈÍÍÍÍÍÍÍÍÍÍÍÍÍÍÍÍÍÍÍÍÍÍÍÍÍÍÍÍÍÍÍÍÍÍÍÍÍ¼

ÉÍÍÍÍÍÍÍÍÍÍÍÍÍÍÍÍÍÍÍÍÍÍÍÍÍÍÍÍÍÍÍÍÍÍÍÍÍ»
º          PRIORITY PREEMPTOR 6            º
º                                          º
ºDON'T OVERRIDE FLASH.....  X              º
ºFLASH ALL OUTPUTS........  .              º
ºYELLOW-RED GOES GREEN....  .              º
ºENABLE MAX PREEMPT TIME..  X              º
ºACTIVE ONLY DURING HOLD..  .              º
ºNO CVM IN FLASH..........  .              º
ºFAST FLASH GRN ON HOLD...  .              º
ºOUT OF FLASH.............  GREEN          º
º                                          º
º                                          º
º                                          º
º                                          º
º                                          º
ºADDITIONAL PAGE(S)                        º
ÈÍÍÍÍÍÍÍÍÍÍÍÍÍÍÍÍÍÍÍÍÍÍÍÍÍÍÍÍÍÍÍÍÍÍÍÍÍ¼
```

```
ÉÍÍÍÍÍÍÍÍÍÍÍÍÍÍÍÍÍÍÍÍÍÍÍÍÍÍÍÍÍÍÍÍÍÍÍÍÍÍÍÍÍÍ»
º          PRIORITY PREEMPTOR 6                    º
º                                                  º
ºMAX TIME...... 90  DURATION TIME..  0             º
ºMIN HOLD TIME.  0  DELAY TIME.....  0             º
ºMIN PED CLEAR.  0  INHIBIT TIME...  0             º
ºEXIT MAX......  0  HLD DELAY TIME.  0             º
º                                                  º
º                GRN  YEL  RED                     º
ºMINIMUM.......    0  0.0  0.0                     º
ºTRACK CLEAR...    0  0.0  0.0                     º
ºHOLD..........       0.0  0.0                     º
º                                                  º
ºLINKED PREEMPTOR.....  0                          º
º                                                  º
º                                                  º
ºEND OF SUBMENU                                    º
ÈÍÍÍÍÍÍÍÍÍÍÍÍÍÍÍÍÍÍÍÍÍÍÍÍÍÍÍÍÍÍÍÍÍÍÍÍÍÍÍÍÍÍ¼

ÉÍÍÍÍÍÍÍÍÍÍÍÍÍÍÍÍÍÍÍÍÍÍÍÍÍÍÍÍÍÍÍÍÍÍÍÍÍÍÍÍÍÍ»
º              BUS PREEMPTOR                       º
º                                                  º
º                    - BUS PREEMPTOR -             º
º                     1    2    3    4             º
ºPREEMPTOR ACTIVE.    .    .    .    .             º
ºDETECTOR LOCK....    .    .    .    .             º
ºMAXIMUM TIME.....    0    0    0    0             º
ºRESERVICE TIME...    0    0    0    0             º
ºDELAY TIME.......    0    0    0    0             º
ºINHIBIT TIME.....    0    0    0    0             º
ºENTRANCE GREEN...    0    0    0    0             º
ºENTRANCE PED CLR.    0    0    0    0             º
ºENTRANCE YELLOW..  0.0  0.0  0.0  0.0             º
ºENTRANCE RED.....  0.0  0.0  0.0  0.0             º
ºMIN HOLD TIME....    0    0    0    0             º
ºADDITIONAL PAGE(S)                                º
ÈÍÍÍÍÍÍÍÍÍÍÍÍÍÍÍÍÍÍÍÍÍÍÍÍÍÍÍÍÍÍÍÍÍÍÍÍÍÍÍÍÍÍ¼

ÉÍÍÍÍÍÍÍÍÍÍÍÍÍÍÍÍÍÍÍÍÍÍÍÍÍÍÍÍÍÍÍÍÍÍÍÍÍÍÍÍÍÍ»
º              BUS PREEMPTOR                       º
º                                                  º
º                 ------ HOLD PHASE -----          º
º                                       1 1 1      º
º                 1 2 3 4 5 6 7 8 9 0 1 2          º
ºPREEMPTOR 1....  . . . . . . . . . . . .          º
ºPREEMPTOR 2....  . . . . . . . . . . . .          º
ºPREEMPTOR 3....  . . . . . . . . . . . .          º
ºPREEMPTOR 4....  . . . . . . . . . . . .          º
º                                                  º
º                                                  º
º                                                  º
º                                                  º
º                                                  º
º                                                  º
ºEND OF SUBMENU                                    º
ÈÍÍÍÍÍÍÍÍÍÍÍÍÍÍÍÍÍÍÍÍÍÍÍÍÍÍÍÍÍÍÍÍÍÍÍÍÍÍÍÍÍÍ¼

ÉÍÍÍÍÍÍÍÍÍÍÍÍÍÍÍÍÍÍÍÍÍÍÍÍÍÍÍÍÍÍÍÍÍÍÍÍÍÍÍÍÍÍ»
º******************************************º
º*   ECONOLITE CONTROL PRODUCTS, INC.   *º
º*            ASC/2-2000                *º
º*          Copyright (C) 1992          *º
```

```
º*                                      *º
º* City of Ontario, Traffic Engineering *º
º*  ASC/2-2100  Configuration Ver. 1.1  *º
º*                                      *º
º*   SOFTWARE ASSY              VERSION  *º
º*   BOOT            32783        1.28  *º
º*   MAIN PROGRAM    34556        1.77  *º
º*   HELP            32789        1.62  *º
º*   CONFIGURATION   32791 (32K) C8145  *º
º*                                      *º
º*                                      *º
º**************************************º
ÈÍÍÍÍÍÍÍÍÍÍÍÍÍÍÍÍÍÍÍÍÍÍÍÍÍÍÍÍÍÍÍÍÍÍÍÍÍÍ¼

ÉÍÍÍÍÍÍÍÍÍÍÍÍÍÍÍÍÍÍÍÍÍÍÍÍÍÍÍÍÍÍÍÍÍÍÍÍÍÍ»
º       NIC/TOD CLOCK/CALENDAR DATA      º
º                                        º
º                                        º
ºDATE SET:  2/21/18  | ENTER DATE/TIME   º
ºTIME SET:  8:10:52  | THEN PRESS ENTER  º
º                                        º
ºMANUAL NIC PROGRAM STEP    0            º
ºMANUAL TOD PROGRAM STEP    0            º
º                                        º
ºSYNC REFERENCE TIME    0:00             º
ºSYNC REFERENCE.........REFERENCE TIME   º
º                                        º
ºWEEK 1 BEGINS ON 1ST SUNDAY  .          º
ºDISABLE DAYLIGHT SAVINGS     .          º
ºDST BEGINS LAST SUNDAY       .          º
ºEND OF SUBMENU                          º
ÈÍÍÍÍÍÍÍÍÍÍÍÍÍÍÍÍÍÍÍÍÍÍÍÍÍÍÍÍÍÍÍÍÍÍÍÍÍÍ¼

ÉÍÍÍÍÍÍÍÍÍÍÍÍÍÍÍÍÍÍÍÍÍÍÍÍÍÍÍÍÍÍÍÍÍÍÍÍÍÍ»
º         NIC/TOD WEEKLY PROGRAMS        º
ºWEEK   SUN   MON   TUE   WED   THU   FRI   SAT º
º  1     2     1     1     1     1     1     2  º
º  2     2     1     1     1     1     1     2  º
º  3     2     1     1     1     1     1     2  º
º  4     2     1     1     1     1     1     2  º
º  5     2     1     1     1     1     1     2  º
º  6     2     1     1     1     1     1     2  º
º  7     2     1     1     1     1     1     2  º
º  8     2     1     1     1     1     1     2  º
º  9     2     1     1     1     1     1     2  º
º 10     2     1     1     1     1     1     2  º
º                                        º
º                                        º
º                                        º
ºEND OF SUBMENU                          º
ÈÍÍÍÍÍÍÍÍÍÍÍÍÍÍÍÍÍÍÍÍÍÍÍÍÍÍÍÍÍÍÍÍÍÍÍÍÍÍ¼

ÉÍÍÍÍÍÍÍÍÍÍÍÍÍÍÍÍÍÍÍÍÍÍÍÍÍÍÍÍÍÍÍÍÍÍÍÍÍÍ»
º         NIC/TOD YEARLY PROGRAM         º
ºWEEK OF YEAR      1  2  3  4  5  6  7  8º
ºWEEKLY PROGRAM    1  1  1  1  1  1  1  1º
º                                        º
ºWEEK OF YEAR      9 10 11 12 13 14 15 16º
ºWEEKLY PROGRAM    1  1  1  1  1  1  1  1º
º                                        º
ºWEEK OF YEAR     17 18 19 20 21 22 23 24º
ºWEEKLY PROGRAM    1  1  1  1  1  1  1  1º
º                                        º
```

♀

```
ºWEEK OF YEAR     25 26 27 28 29 30 31 32º
ºWEEKLY PROGRAM    1  1  1  1  1  1  1  1º
º                                         º
ºWEEK OF YEAR     33 34 35 36 37 38 39 40º
ºWEEKLY PROGRAM    1  1  1  1  1  1  1  1º
ºADDITIONAL SCREEN(S)                     º
ÈÍÍÍÍÍÍÍÍÍÍÍÍÍÍÍÍÍÍÍÍÍÍÍÍÍÍÍÍÍÍÍÍÍÍÍÍÍ¼

ÉÍÍÍÍÍÍÍÍÍÍÍÍÍÍÍÍÍÍÍÍÍÍÍÍÍÍÍÍÍÍÍÍÍÍÍÍÍ»
º          NIC/TOD YEARLY PROGRAM         º
º                                         º
ºWEEK OF YEAR     41 42 43 44 45 46 47 48º
ºWEEKLY PROGRAM    1  1  1  1  1  1  1  1º
º                                         º
ºWEEK OF YEAR              49 50 51 52 53º
ºWEEKLY PROGRAM             1  1  1  1  1º
º                                         º
º                                         º
º                                         º
º                                         º
º                                         º
º                                         º
º                                         º
º                                         º
ºEND OF SUBMENU                           º
ÈÍÍÍÍÍÍÍÍÍÍÍÍÍÍÍÍÍÍÍÍÍÍÍÍÍÍÍÍÍÍÍÍÍÍÍÍÍ¼

ÉÍÍÍÍÍÍÍÍÍÍÍÍÍÍÍÍÍÍÍÍÍÍÍÍÍÍÍÍÍÍÍÍÍÍÍÍÍ»
º          NIC/TOD HOLIDAY PROGRAM        º
ºHOLIDAY   FLOAT/  MON/  DOW/  WOM/  PROG º
º          FIXED   MON   DOM   YEAR       º
º   1      FIXED     0     0      0    0  º
º   2      FIXED     0     0      0    0  º
º   3      FIXED     0     0      0    0  º
º   4      FIXED     0     0      0    0  º
º   5      FIXED     0     0      0    0  º
º   6      FIXED     0     0      0    0  º
º   7      FIXED     0     0      0    0  º
º   8      FIXED     0     0      0    0  º
º   9      FIXED     0     0      0    0  º
º  10      FIXED     0     0      0    0  º
º  11      FIXED     0     0      0    0  º
º  12      FIXED     0     0      0    0  º
ºADDITIONAL SCREEN(S)                     º
ÈÍÍÍÍÍÍÍÍÍÍÍÍÍÍÍÍÍÍÍÍÍÍÍÍÍÍÍÍÍÍÍÍÍÍÍÍÍ¼

ÉÍÍÍÍÍÍÍÍÍÍÍÍÍÍÍÍÍÍÍÍÍÍÍÍÍÍÍÍÍÍÍÍÍÍÍÍÍ»
º          NIC/TOD HOLIDAY PROGRAM        º
ºHOLIDAY   FLOAT/  MON/  DOW/  WOM/  PROG º
º          FIXED   MON   DOM   YEAR       º
º  13      FIXED     0     0      0    0  º
º  14      FIXED     0     0      0    0  º
º  15      FIXED     0     0      0    0  º
º  16      FIXED     0     0      0    0  º
º  17      FIXED     0     0      0    0  º
º  18      FIXED     0     0      0    0  º
º  19      FIXED     0     0      0    0  º
º  20      FIXED     0     0      0    0  º
º  21      FIXED     0     0      0    0  º
º  22      FIXED     0     0      0    0  º
º  23      FIXED     0     0      0    0  º
º  24      FIXED     0     0      0    0  º
ºADDITIONAL SCREEN(S)                     º
```

```
ÈÍÍÍ
```

```
º13   0     .     0.0     0    .       .  º
º14   0     .     0.0     0    .       .  º
º15   0     .     0.0     0    .       .  º
º16   0     .     0.0     0    .       .  º
º17   0     .     0.0     0    .       .  º
º18   0     .     0.0     0    .       .  º
º19   0     .     0.0     0    .       .  º
º20   0     .     0.0     0    .       .  º
º21   0     .     0.0     0    .       .  º
º22   0     .     0.0     0    .       .  º
º23   0     .     0.0     0    .       .  º
º24   0     .     0.0     0    .       .  º
ºADDITIONAL SCREEN(S)                     º
ÈÍÍÍÍÍÍÍÍÍÍÍÍÍÍÍÍÍÍÍÍÍÍÍÍÍÍÍÍÍÍÍÍÍÍÍÍÍÍÍÍÍ¼
♀

ÉÍÍÍÍÍÍÍÍÍÍÍÍÍÍÍÍÍÍÍÍÍÍÍÍÍÍÍÍÍÍÍÍÍÍÍÍÍÍÍÍÍ»
º          DETECTOR TYPE/TIMERS           º
º                                NO    LOG   º
ºDET TYPE LOCK  EXTEND DELAY RESET ENABLEº
º25   0     .     0.0     0    .       .  º
º26   0     .     0.0     0    .       .  º
º27   0     .     0.0     0    .       .  º
º28   0     .     0.0     0    .       .  º
º29   0     .     0.0     0    .       .  º
º30   0     .     0.0     0    .       .  º
º31   0     .     0.0     0    .       .  º
º32   0     .     0.0     0    .       .  º
º33   0     .     0.0     0    .       .  º
º34   0     .     0.0     0    .       .  º
º35   0     .     0.0     0    .       .  º
º36   0     .     0.0     0    .       .  º
ºADDITIONAL SCREEN(S)                     º
ÈÍÍÍÍÍÍÍÍÍÍÍÍÍÍÍÍÍÍÍÍÍÍÍÍÍÍÍÍÍÍÍÍÍÍÍÍÍÍÍÍÍ¼

ÉÍÍÍÍÍÍÍÍÍÍÍÍÍÍÍÍÍÍÍÍÍÍÍÍÍÍÍÍÍÍÍÍÍÍÍÍÍÍÍÍÍ»
º          DETECTOR TYPE/TIMERS           º
º                                NO    LOG   º
ºDET TYPE LOCK  EXTEND DELAY RESET ENABLEº
º37   0     .     0.0     0    .       .  º
º38   0     .     0.0     0    .       .  º
º39   0     .     0.0     0    .       .  º
º40   0     .     0.0     0    .       .  º
º41   0     .     0.0     0    .       .  º
º42   0     .     0.0     0    .       .  º
º43   0     .     0.0     0    .       .  º
º44   0     .     0.0     0    .       .  º
º45   0     .     0.0     0    .       .  º
º46   0     .     0.0     0    .       .  º
º47   0     .     0.0     0    .       .  º
º48   0     .     0.0     0    .       .  º
ºADDITIONAL SCREEN(S)                     º
ÈÍÍÍÍÍÍÍÍÍÍÍÍÍÍÍÍÍÍÍÍÍÍÍÍÍÍÍÍÍÍÍÍÍÍÍÍÍÍÍÍÍ¼

ÉÍÍÍÍÍÍÍÍÍÍÍÍÍÍÍÍÍÍÍÍÍÍÍÍÍÍÍÍÍÍÍÍÍÍÍÍÍÍÍÍÍ»
º          DETECTOR TYPE/TIMERS           º
º                                NO    LOG   º
ºDET TYPE LOCK  EXTEND DELAY RESET ENABLEº
º49   0     .     0.0     0    .       .  º
º50   0     .     0.0     0    .       .  º
º51   0     .     0.0     0    .       .  º
º52   0     .     0.0     0    .       .  º
º53   0     .     0.0     0    .       .  º
º54   0     .     0.0     0    .       .  º
```

```
º55   0     .     0.0     0    .      .  º
º56   0     .     0.0     0    .      .  º
º57   0     .     0.0     0    .      .  º
º58   0     .     0.0     0    .      .  º
º59   0     .     0.0     0    .      .  º
º60   0     .     0.0     0    .      .  º
ºADDITIONAL SCREEN(S)                    º
ÈÍÍÍÍÍÍÍÍÍÍÍÍÍÍÍÍÍÍÍÍÍÍÍÍÍÍÍÍÍÍÍÍÍÍÍÍÍÍ¼

ÉÍÍÍÍÍÍÍÍÍÍÍÍÍÍÍÍÍÍÍÍÍÍÍÍÍÍÍÍÍÍÍÍÍÍÍÍÍÍ»
º          DETECTOR TYPE/TIMERS          º
º                              NO    LOG   º
ºDET TYPE LOCK  EXTEND DELAY RESET ENABLEº
º53   0     .     0.0     0    .      .  º
º54   0     .     0.0     0    .      .  º
º55   0     .     0.0     0    .      .  º
º56   0     .     0.0     0    .      .  º
º57   0     .     0.0     0    .      .  º
º58   0     .     0.0     0    .      .  º
º59   0     .     0.0     0    .      .  º
º60   0     .     0.0     0    .      .  º
º61   0     .     0.0     0    .      .  º
º62   0     .     0.0     0    .      .  º
º63   0     .     0.0     0    .      .  º
º64   0     .     0.0     0    .      .  º
ºEND OF SUBMENU                          º
ÈÍÍÍÍÍÍÍÍÍÍÍÍÍÍÍÍÍÍÍÍÍÍÍÍÍÍÍÍÍÍÍÍÍÍÍÍÍÍ¼

ÉÍÍÍÍÍÍÍÍÍÍÍÍÍÍÍÍÍÍÍÍÍÍÍÍÍÍÍÍÍÍÍÍÍÍÍÍÍÍ»
º      DETECTOR PHASE ASSIGNMENT         º
º              PHASE ASSIGNMENT: 1 1 1   º
ºDETECTOR      1 2 3 4 5 6 7 8 9 0 1 2   º
º    1         . . . . . . . . . . . .   º
º    2         . X . . . . . . . . . .   º
º    3         . . X . . . . . . . . .   º
º    4         . . . X . . . . . . . .   º
º    5         . . . . . . . . . . . .   º
º    6         . . . . . . . . . . . .   º
º    7         . . . . . . . . . . . .   º
º    8         . . . . . . . X . . . .   º
º    9         . . . . . . . . . . . .   º
º   10         . . . . . . . . . . . .   º
º   11         . . . . . . . . . . . .   º
º   12         . . . X . . . . . . . .   º
ºADDITIONAL SCREEN(S)                    º
ÈÍÍÍÍÍÍÍÍÍÍÍÍÍÍÍÍÍÍÍÍÍÍÍÍÍÍÍÍÍÍÍÍÍÍÍÍÍÍ¼

ÉÍÍÍÍÍÍÍÍÍÍÍÍÍÍÍÍÍÍÍÍÍÍÍÍÍÍÍÍÍÍÍÍÍÍÍÍÍÍ»
º      DETECTOR PHASE ASSIGNMENT         º
º              PHASE ASSIGNMENT: 1 1 1   º
ºDETECTOR      1 2 3 4 5 6 7 8 9 0 1 2   º
º   13         . . . . . . . . . . . .   º
º   14         . . . . . . . . . . . .   º
º   15         . . . . . . . . . . . .   º
º   16         . . . . . . . X . . . .   º
º   17         . . . . . . . . . . . .   º
º   18         . . . . . . . . . . . .   º
º   19         . . . . . . . . . . . .   º
º   20         . . . . . . . . . . . .   º
º   21         . . . . . . . . . . . .   º
º   22         . . . . . . . . . . . .   º
º   23         . . . . . . . . . . . .   º
º   24         . . . . . . . . . . . .   º
```

```
ºADDITIONAL SCREEN(S)                                          º
ÈÍÍÍÍÍÍÍÍÍÍÍÍÍÍÍÍÍÍÍÍÍÍÍÍÍÍÍÍÍÍÍÍÍÍÍÍÍÍÍÍÍÍÍÍÍÍÍÍÍÍÍÍÍÍ¼

ÉÍÍÍÍÍÍÍÍÍÍÍÍÍÍÍÍÍÍÍÍÍÍÍÍÍÍÍÍÍÍÍÍÍÍÍÍÍÍÍÍÍÍÍÍÍÍÍÍÍÍÍÍÍÍ»
ºPED AND SYSTEM DETECTOR LOCAL ASSIGNMENTº
º                                                              º
ºDETECTOR LOG INTERVAL.........  0 MINUTESº
º--------------------------------------------------------------º
ºLOCAL          - PHASE PED DETECTOR -                         º
ºPED DET         1   2   3   4   5   6                         º
ºNUMBER..        1   2   3   4   5   6                         º
º                7   8   9  10  11  12                         º
ºNUMBER..        7   8   9  10  11  12                         º
º--------------------------------------------------------------º
ºLOCAL      -- LOCAL SYSTEM DET NUMBER ---                     º
ºDETECTOR   1   2   3   4   5   6   7   8º
ºNUMBER..   0   0   0   0   0   0   0   0º
º           9  10  11  12  13  14  15  16º
ºNUMBER..   0   0   0   0   0   0   0   0º
ºEND OF SUBMENU                                                º
ÈÍÍÍÍÍÍÍÍÍÍÍÍÍÍÍÍÍÍÍÍÍÍÍÍÍÍÍÍÍÍÍÍÍÍÍÍÍÍÍÍÍÍÍÍÍÍÍÍÍÍÍÍÍÍ¼

ÉÍÍÍÍÍÍÍÍÍÍÍÍÍÍÍÍÍÍÍÍÍÍÍÍÍÍÍÍÍÍÍÍÍÍÍÍÍÍÍÍÍÍÍÍÍÍÍÍÍÍÍÍÍÍ»
º            CROSS SWITCHING                                   º
º               PHASES:              1 1 1                     º
ºDETECTOR       1 2 3 4 5 6 7 8 9 0 1 2                        º
º    1          . . . . . . . . . . . .                        º
º    2          . X . . . . . . . . . .                        º
º    3          . . . . . . . . . . . .                        º
º    4          . . . . . . . . . . . .                        º
º    5          . . . . . . . . . . . .                        º
º    6          . . . . . . . . . . . .                        º
º    7          . . . . . . . . . . . .                        º
º    8          . . . . . . . . . . . .                        º
º    9          . . . . . . . . . . . .                        º
º   10          . X . . . . . . . . . .                        º
º   11          . . . . . . . . . . . .                        º
º   12          . . . . . . . . . . . .                        º
ºADDITIONAL SCREEN(S)                                          º
ÈÍÍÍÍÍÍÍÍÍÍÍÍÍÍÍÍÍÍÍÍÍÍÍÍÍÍÍÍÍÍÍÍÍÍÍÍÍÍÍÍÍÍÍÍÍÍÍÍÍÍÍÍÍÍ¼

ÉÍÍÍÍÍÍÍÍÍÍÍÍÍÍÍÍÍÍÍÍÍÍÍÍÍÍÍÍÍÍÍÍÍÍÍÍÍÍÍÍÍÍÍÍÍÍÍÍÍÍÍÍÍÍ»
º             SPEED DETECTORS                                  º
º                                                              º
º  SPEED DET NUMBER:  ...1....2....3....4º
ºONE DETECTOR SPEED:                                           º
º LOCAL DET NUMBER..     0    0    0    0º
º VEHICLE LENGTH....     0    0    0    0º
º LOOP LENGTH.......     0    0    0    0º
º                                                              º
ºTWO DETECTOR SPEED:                                           º
º LOCAL DET NUMBER..     0    0    0    0º
º SPEED TRAP LENGTH.     0    0    0    0º
º                                                              º
ºENABLE LOG.........     .    .    .    .º
º                                                              º
ºUNITS:  INCHES                                                º
ºADDITIONAL PAGE(S)                              MORE->º
ÈÍÍÍÍÍÍÍÍÍÍÍÍÍÍÍÍÍÍÍÍÍÍÍÍÍÍÍÍÍÍÍÍÍÍÍÍÍÍÍÍÍÍÍÍÍÍÍÍÍÍÍÍÍÍ¼

ÉÍÍÍÍÍÍÍÍÍÍÍÍÍÍÍÍÍÍÍÍÍÍÍÍÍÍÍÍÍÍÍÍÍÍÍÍÍÍÍÍÍÍÍÍÍÍÍÍÍÍÍÍÍÍ»
º             SPEED DETECTORS                                  º
º                                                              º
```

```
º  SPEED DET NUMBER:  ...5....6....7....8º
ºONE DETECTOR SPEED:                      º
º LOCAL DET NUMBER..     0    0    0    0º
º VEHICLE LENGTH....     0    0    0    0º
º LOOP LENGTH.......     0    0    0    0º
º                                         º
ºTWO DETECTOR SPEED:                      º
º LOCAL DET NUMBER..     0    0    0    0º
º SPEED TRAP LENGTH.     0    0    0    0º
º                                         º
ºENABLE LOG.........     .    .    .    .º
º                                         º
ºUNITS:  INCHES                           º
ºADDITIONAL PAGE(S)              <-MORE   º
ÈÍÍÍÍÍÍÍÍÍÍÍÍÍÍÍÍÍÍÍÍÍÍÍÍÍÍÍÍÍÍÍÍÍÍÍÍÍÍÍÍÍ¼

ÉÍÍÍÍÍÍÍÍÍÍÍÍÍÍÍÍÍÍÍÍÍÍÍÍÍÍÍÍÍÍÍÍÍÍÍÍÍÍÍÍÍ»
º            SPEED DETECTORS              º
º                                         º
º  SPEED DET NUMBER:  ...9...10...11...12º
ºONE DETECTOR SPEED:                      º
º LOCAL DET NUMBER..     0    0    0    0º
º VEHICLE LENGTH....     0    0    0    0º
º LOOP LENGTH.......     0    0    0    0º
º                                         º
ºTWO DETECTOR SPEED:                      º
º LOCAL DET NUMBER..     0    0    0    0º
º SPEED TRAP LENGTH.     0    0    0    0º
º                                         º
ºENABLE LOG.........     .    .    .    .º
º                                         º
º                                         º
ºEND OF SUBMENU                  MORE->   º
ÈÍÍÍÍÍÍÍÍÍÍÍÍÍÍÍÍÍÍÍÍÍÍÍÍÍÍÍÍÍÍÍÍÍÍÍÍÍÍÍÍÍ¼

ÉÍÍÍÍÍÍÍÍÍÍÍÍÍÍÍÍÍÍÍÍÍÍÍÍÍÍÍÍÍÍÍÍÍÍÍÍÍÍÍÍÍ»
º            SPEED DETECTORS              º
º                                         º
º  SPEED DET NUMBER:  ..13...14...15...16º
ºONE DETECTOR SPEED:                      º
º LOCAL DET NUMBER..     0    0    0    0º
º VEHICLE LENGTH....     0    0    0    0º
º LOOP LENGTH.......     0    0    0    0º
º                                         º
ºTWO DETECTOR SPEED:                      º
º LOCAL DET NUMBER..     0    0    0    0º
º SPEED TRAP LENGTH.     0    0    0    0º
º                                         º
ºENABLE LOG.........     .    .    .    .º
º                                         º
º                                         º
ºEND OF SUBMENU                  <-MORE   º
ÈÍÍÍÍÍÍÍÍÍÍÍÍÍÍÍÍÍÍÍÍÍÍÍÍÍÍÍÍÍÍÍÍÍÍÍÍÍÍÍÍÍ¼

ÉÍÍÍÍÍÍÍÍÍÍÍÍÍÍÍÍÍÍÍÍÍÍÍÍÍÍÍÍÍÍÍÍÍÍÍÍÍÍÍÍÍ»
º      PED DETECTOR DIAGNOSTIC PLAN       º
º                                         º
ºPLAN DET NUMBER  1  2  3  4  5  6  7  8 º
º  1  DIAG NUM..  0  0  0  0  0  0  0  0 º
º     SCALING...  1  1  1  1  1  1  1  1 º
º  2  DIAG NUM..  0  0  0  0  0  0  0  0 º
º     SCALING...  1  1  1  1  1  1  1  1 º
º  3  DIAG NUM..  0  0  0  0  0  0  0  0 º
```

```
º     SCALING...  1  1  1  1  1  1  1  1 º
º  4  DIAG NUM..  0  0  0  0  0  0  0  0 º
º     SCALING...  1  1  1  1  1  1  1  1 º
º  5  DIAG NUM..  0  0  0  0  0  0  0  0 º
º     SCALING...  1  1  1  1  1  1  1  1 º
º  6  DIAG NUM..  0  0  0  0  0  0  0  0 º
º     SCALING...  1  1  1  1  1  1  1  1 º
ºADDITIONAL SCREEN(S)              MORE->º
ÈÍÍÍÍÍÍÍÍÍÍÍÍÍÍÍÍÍÍÍÍÍÍÍÍÍÍÍÍÍÍÍÍÍÍÍÍÍÍ¼

ÉÍÍÍÍÍÍÍÍÍÍÍÍÍÍÍÍÍÍÍÍÍÍÍÍÍÍÍÍÍÍÍÍÍÍÍÍÍÍ»
º      PED DETECTOR DIAGNOSTIC PLAN      º
º                                         º
ºPLAN DET NUMBER  1  2  3  4  5  6  7  8 º
º  7  DIAG NUM..  0  0  0  0  0  0  0  0 º
º     SCALING...  1  1  1  1  1  1  1  1 º
º  8  DIAG NUM..  0  0  0  0  0  0  0  0 º
º     SCALING...  1  1  1  1  1  1  1  1 º
º                                         º
º                                         º
º                                         º
º                                         º
º                                         º
º                                         º
º                                         º
º                                         º
ºEND OF SUBMENU                    MORE->º
ÈÍÍÍÍÍÍÍÍÍÍÍÍÍÍÍÍÍÍÍÍÍÍÍÍÍÍÍÍÍÍÍÍÍÍÍÍÍÍ¼

ÉÍÍÍÍÍÍÍÍÍÍÍÍÍÍÍÍÍÍÍÍÍÍÍÍÍÍÍÍÍÍÍÍÍÍÍÍÍÍ»
º      PED DETECTOR DIAGNOSTIC PLAN      º
º                                         º
ºPLAN DET NUMBER  9 10 11 12              º
º  1  DIAG NUM..  0  0  0  0              º
º     SCALING...  1  1  1  1              º
º  2  DIAG NUM..  0  0  0  0              º
º     SCALING...  1  1  1  1              º
º  3  DIAG NUM..  0  0  0  0              º
º     SCALING...  1  1  1  1              º
º  4  DIAG NUM..  0  0  0  0              º
º     SCALING...  1  1  1  1              º
º  5  DIAG NUM..  0  0  0  0              º
º     SCALING...  1  1  1  1              º
º  6  DIAG NUM..  0  0  0  0              º
º     SCALING...  1  1  1  1              º
ºADDITIONAL SCREEN(S)           <-MORE    º
ÈÍÍÍÍÍÍÍÍÍÍÍÍÍÍÍÍÍÍÍÍÍÍÍÍÍÍÍÍÍÍÍÍÍÍÍÍÍÍ¼

ÉÍÍÍÍÍÍÍÍÍÍÍÍÍÍÍÍÍÍÍÍÍÍÍÍÍÍÍÍÍÍÍÍÍÍÍÍÍÍ»
º      PED DETECTOR DIAGNOSTIC PLAN      º
º                                         º
ºPLAN DET NUMBER  9 10 11 12              º
º  7  DIAG NUM..  0  0  0  0              º
º     SCALING...  1  1  1  1              º
º  8  DIAG NUM..  0  0  0  0              º
º     SCALING...  1  1  1  1              º
º                                         º
º                                         º
º                                         º
º                                         º
º                                         º
º                                         º
º                                         º
```

```
º                                                    º
ºEND OF SUBMENU                        <-MORE  º
ÈÍÍÍÍÍÍÍÍÍÍÍÍÍÍÍÍÍÍÍÍÍÍÍÍÍÍÍÍÍÍÍÍÍÍÍÍÍÍÍÍÍÍÍÍ¼

ÉÍÍÍÍÍÍÍÍÍÍÍÍÍÍÍÍÍÍÍÍÍÍÍÍÍÍÍÍÍÍÍÍÍÍÍÍÍÍÍÍÍÍ»
º      DETECTOR DIAGNOSTIC INTERVAL                  º
º                                                    º
ºDIAGNOSTIC     NO       MAX     ERRATIC º
º  NUMBER    ACTIVITY  PRESENCE  COUNTS  º
º    1          0         0         0   º
º    2          0         0         0   º
º    3          0         0         0   º
º    4          0         0         0   º
º    5          0         0         0   º
º    6          0         0         0   º
º    7          0         0         0   º
º    8          0         0         0   º
º    9          0         0         0   º
º   10          0         0         0   º
º   11          0         0         0   º
ºADDITIONAL SCREEN(S)                                º
ÈÍÍÍÍÍÍÍÍÍÍÍÍÍÍÍÍÍÍÍÍÍÍÍÍÍÍÍÍÍÍÍÍÍÍÍÍÍÍÍÍÍÍÍÍ¼

ÉÍÍÍÍÍÍÍÍÍÍÍÍÍÍÍÍÍÍÍÍÍÍÍÍÍÍÍÍÍÍÍÍÍÍÍÍÍÍÍÍÍÍ»
º      DETECTOR DIAGNOSTIC INTERVAL                  º
º                                                    º
ºDIAGNOSTIC     NO       MAX     ERRATIC º
º  NUMBER    ACTIVITY  PRESENCE  COUNTS  º
º   12          0         0         0   º
º   13          0         0         0   º
º   14          0         0         0   º
º   15          0         0         0   º
º   16          0         0         0   º
º   17          0         0         0   º
º   18          0         0         0   º
º   19          0         0         0   º
º   20          0         0         0   º
º   21          0         0         0   º
º   22          0         0         0   º
ºADDITIONAL SCREEN(S)                                º
ÈÍÍÍÍÍÍÍÍÍÍÍÍÍÍÍÍÍÍÍÍÍÍÍÍÍÍÍÍÍÍÍÍÍÍÍÍÍÍÍÍÍÍÍÍ¼
♀
ÉÍÍÍÍÍÍÍÍÍÍÍÍÍÍÍÍÍÍÍÍÍÍÍÍÍÍÍÍÍÍÍÍÍÍÍÍÍÍÍÍÍÍ»
º      DETECTOR DIAGNOSTIC INTERVAL                  º
º                                                    º
ºDIAGNOSTIC     NO       MAX     ERRATIC º
º  NUMBER    ACTIVITY  PRESENCE  COUNTS  º
º   22          0         0         0   º
º   23          0         0         0   º
º   24          0         0         0   º
º   25          0         0         0   º
º   26          0         0         0   º
º   27          0         0         0   º
º   28          0         0         0   º
º   29          0         0         0   º
º   30          0         0         0   º
º   31          0         0         0   º
º   32          0         0         0   º
ºEND OF SUBMENU                                      º
ÈÍÍÍÍÍÍÍÍÍÍÍÍÍÍÍÍÍÍÍÍÍÍÍÍÍÍÍÍÍÍÍÍÍÍÍÍÍÍÍÍÍÍÍÍ¼
♀
```

```
ÉÍÍÍÍÍÍÍÍÍÍÍÍÍÍÍÍÍÍÍÍÍÍÍÍÍÍÍÍÍÍÍÍÍÍÍÍÍÍÍÍÍ»
º*****************************************º
º*   ECONOLITE CONTROL PRODUCTS, INC.    *º
º*            ASC/2-2000                 *º
º*          Copyright (C) 1992           *º
º*                                       *º
º* City of Ontario, T MffdM Engineering *º
º*  ASC/2-2M0MM Co figuratiMODMer m1.1   *º
º*                                       *º
º*   SOFTWARE ASSY             VERSION   *º
º*   BOOT            32783        1.25   *º
º*   MAIN PROGRAM    32787        1.59   *º
º*   HELP            32789        1.48   *º
º*   CONFIGURATION   32790       C8145   *º
º*                                       *º
º*                                       *º
º*****************************************º
ÈÍÍÍÍÍÍÍÍÍÍÍÍÍÍÍÍÍÍÍÍÍÍÍÍÍÍÍÍÍÍÍÍÍÍÍÍÍÍÍÍÍ¼

ÉÍÍÍÍÍÍÍÍÍÍÍÍÍÍÍÍÍÍÍÍÍÍÍÍÍÍÍÍÍÍÍÍÍÍÍÍÍÍÍÍÍ»
º           CONTROLLER SEQUENCE           º
º                                         º
º    ------------ PRIORITY ------------    º
º                                1  1  1    º
º    1..2..3..4..5..6..7..8..9..0..1..2    º
ºR1  1  2| 3  4| 9 10| 0  0  0  0  0  0    º
ºR2  5  6| 7  8|11 12| 0  0  0  0  0  0    º
ºCG   .  ^  .  ^  .  ^  .  .  .  .  .  .    º
º                                         º
º                                         º
ºR1,R2 = RING 1 AND 2 PHASE ASSIGNMENT.   º
º                                         º
ºCG    = BARRIER LOCATION BETWEEN         º
º        CONCURRENT PHASE TIMING GROUPS.  º
º                                         º
ºEND OF SUBMENU                           º
ÈÍÍÍÍÍÍÍÍÍÍÍÍÍÍÍÍÍÍÍÍÍÍÍÍÍÍÍÍÍÍÍÍÍÍÍÍÍÍÍÍÍ¼

ÉÍÍÍÍÍÍÍÍÍÍÍÍÍÍÍÍÍÍÍÍÍÍÍÍÍÍÍÍÍÍÍÍÍÍÍÍÍÍÍÍÍ»
º              PHASES IN USE              º
º                                         º
º                  ----- PHASE NUMBER ----º
º                                  1 1 1º
º                  1 2 3 4 5 6 7 8 9 0 1 2º
ºPHASES IN USE     . X X X . . . X . . . .º
ºEXCLUSIVE PED     . . . . . . . . . . . .º
º                                         º
º                                         º
º                                         º
º                                         º
º                                         º
º                                         º
º                                         º
º                                         º
º                                         º
ºEND OF SUBMENU                           º
ÈÍÍÍÍÍÍÍÍÍÍÍÍÍÍÍÍÍÍÍÍÍÍÍÍÍÍÍÍÍÍÍÍÍÍÍÍÍÍÍÍÍ¼

ÉÍÍÍÍÍÍÍÍÍÍÍÍÍÍÍÍÍÍÍÍÍÍÍÍÍÍÍÍÍÍÍÍÍÍÍÍÍÍÍÍÍ»
ºPHASE TO LOAD SWITCH (MMU) ASSIGNMENT    º
º                                         º
ºLOAD       SIGNAL    LOAD       SIGNAL   º
ºSWITCH     DRIVER    SWITCH     DRIVER   º
```

```
º(MMU)      GROUP     (MMU)      GROUP   º
ºCHANNEL PH/OLAP PED  CHANNEL PH/OLAP PEDº
º   1       0     .     9       0     . º
º   2       2     .    10       0     . º
º   3       3     .    11       0     . º
º   4       4     .    12       0     . º
º   5       0     .    13       0     . º
º   6       0     .    14       4     X º
º   7       0     .    15       0     . º
º   8       8     .    16       0     . º
ºENTER 13-16 FOR OVERLAPS A-D            º
ºEND OF SUBMENU                          º
ÈÍÍÍÍÍÍÍÍÍÍÍÍÍÍÍÍÍÍÍÍÍÍÍÍÍÍÍÍÍÍÍÍÍÍÍÍÍÍ¼

ÉÍÍÍÍÍÍÍÍÍÍÍÍÍÍÍÍÍÍÍÍÍÍÍÍÍÍÍÍÍÍÍÍÍÍÍÍÍÍ»
º          SDLC OPTIONS/ENABLES          º
º                                        º
º                 ----- BIU NUMBER ----- º
º                1..2..3..4..5..6..7..8 º
ºTERM & FACIL...  X  X  .  .  .  .  .  . º
ºDETECTOR RACK..  X  .  .  .  .  .  .  . º
º                                        º
ºTYPE 2 RUNS AS TYPE 1................ X º
ºMMU DISABLE.......................... . º
ºDIAGNOSTIC ENABLE (TEST FIXTURE)..... . º
ºPEER TO PEER ENABLE.................. . º
º                                        º
ºPEER TO PEER ADDRESSES:                 º
º1) 255  2) 255  3) 255  4) 255   5) 255 º
º6) 255  7) 255  8) 255  9) 255  10) 255 º
ºEND OF SUBMENU                          º
ÈÍÍÍÍÍÍÍÍÍÍÍÍÍÍÍÍÍÍÍÍÍÍÍÍÍÍÍÍÍÍÍÍÍÍÍÍÍÍ¼

ÉÍÍÍÍÍÍÍÍÍÍÍÍÍÍÍÍÍÍÍÍÍÍÍÍÍÍÍÍÍÍÍÍÍÍÍÍÍÍ»
º         PORT2 CONFIGURATION            º
º                                        º
ºPORT2 PROTOCOL.................  TERMNL  º
ºPORT2 ENABLE..................     YES  º
º                                        º
ºAB3418 ADDRESS.................       0  º
ºAB3418 GROUP ADDRESS...........       0  º
ºAB3418 RESPONSE DELAY..........       0  º
ºAB3418 SINGLE FLAG ENABLE.....      NO  º
ºAB3418 DROP-OUT TIME..........       0  º
ºAB3418 TOD SF SELECT..........       0  º
º                                        º
ºDATA RATE (BPS)................   38.4k  º
ºDATA, PARITY, STOP............ 8, N, 1  º
º                                        º
ºEND OF SUBMENU                          º
ÈÍÍÍÍÍÍÍÍÍÍÍÍÍÍÍÍÍÍÍÍÍÍÍÍÍÍÍÍÍÍÍÍÍÍÍÍÍÍ¼

ÉÍÍÍÍÍÍÍÍÍÍÍÍÍÍÍÍÍÍÍÍÍÍÍÍÍÍÍÍÍÍÍÍÍÍÍÍÍÍ»
º         PORT3 CONFIGURATION            º
º                                        º
ºPORT3 PROTOCOL.................   TELEM  º
ºPORT3 ENABLE..................     YES  º
º                                        º
ºTELEMETRY ADDRESS.............       5  º
ºSYSTEM DETECTOR 9-16 ADDRESS..       0  º
ºTELEMETRY RESPONSE DELAY......    8000  º
º                                        º
ºAB3418 ADDRESS................       0  º
```

```
ºAB3418 GROUP ADDRESS.....          0  º
ºAB3418 RESPONSE DELAY.....         0  º
ºAB3418 SINGLE FLAG ENABLE.....    NO  º
ºAB3418 DROP-OUT TIME.....          0  º
ºAB3418 TOD SF SELECT.....          0  º
ºADDITIONAL SCREEN(S)                  º
ÈÍÍÍÍÍÍÍÍÍÍÍÍÍÍÍÍÍÍÍÍÍÍÍÍÍÍÍÍÍÍÍÍÍÍÍÍÍ¼

ÉÍÍÍÍÍÍÍÍÍÍÍÍÍÍÍÍÍÍÍÍÍÍÍÍÍÍÍÍÍÍÍÍÍÍÍÍÍ»
º         PORT3 CONFIGURATION          º
o                                      o
o                                      o
ºDUPLEX -- HALF or FULL.....    FULL   º
ºMODEM DATA RATE (BPS).....     1200   º
ºDATA, PARITY, STOP..... 8, O, 1       º
o                                      o
o                                      o
o                                      o
o                                      o
o                                      o
o                                      o
o                                      o
o                                      o
o                                      o
ºEND OF SUBMENU                        º
ÈÍÍÍÍÍÍÍÍÍÍÍÍÍÍÍÍÍÍÍÍÍÍÍÍÍÍÍÍÍÍÍÍÍÍÍÍÍ¼

ÉÍÍÍÍÍÍÍÍÍÍÍÍÍÍÍÍÍÍÍÍÍÍÍÍÍÍÍÍÍÍÍÍÍÍÍÍÍ»
º            ENABLE EVENT LOGS         º
o                                      o
ºCRITICAL RFE'S (MMU/TF) . . . . . .   X º
ºNON-CRITICAL RFE'S (DET/TEST) . . .   . º
ºDETECTOR ERRORS . . . . . .           X º
ºCOORDINATION ERRORS . . . . . .       X º
ºMMU FLASH FAULTS  . . . . . .         X º
ºLOCAL FLASH FAULTS  . . . . . .       X º
ºPREEMPT . . . . . .                   X º
ºPOWER ON/OFF  . . . . . .             X º
ºLOW BATTERY . . . . . .               X º
ºSPARE . . . . . .                     . º
ºALARM 1 . . . . . .                   . º
ºALARM 2 . . . . . .                   . º
ºALARM 3 . . . . . .                   . º
ºADDITIONAL SCREEN(S)                  º
ÈÍÍÍÍÍÍÍÍÍÍÍÍÍÍÍÍÍÍÍÍÍÍÍÍÍÍÍÍÍÍÍÍÍÍÍÍÍ¼

ÉÍÍÍÍÍÍÍÍÍÍÍÍÍÍÍÍÍÍÍÍÍÍÍÍÍÍÍÍÍÍÍÍÍÍÍÍÍ»
º            ENABLE EVENT LOGS         º
o                                      o
ºALARM 4 . . . . . .                   . º
ºALARM 5 . . . . . .                   . º
ºALARM 6 . . . . . .                   . º
ºALARM 7 . . . . . .                   . º
ºALARM 8 . . . . . .                   . º
ºALARM 9 . . . . . .                   . º
ºALARM 10  . . . . . .                 . º
ºALARM 11  . . . . . .                 . º
ºALARM 12  . . . . . .                 . º
ºALARM 13  . . . . . .                 . º
ºALARM 14  . . . . . .                 . º
ºALARM 15  . . . . . .                 . º
ºALARM 16  . . . . . .                 . º
ºEND OF SUBMENU                        º
```

```
ÈÍÍÍÍÍÍÍÍÍÍÍÍÍÍÍÍÍÍÍÍÍÍÍÍÍÍÍÍÍÍÍÍÍÍÍÍÍÍÍÍÍÍÍÍÍ¼

ÉÍÍÍÍÍÍÍÍÍÍÍÍÍÍÍÍÍÍÍÍÍÍÍÍÍÍÍÍÍÍÍÍÍÍÍÍÍÍÍÍÍÍÍÍÍ»
º                  OPTIONS                              º
º                                                       º
º                                                       º
º                                                       º
ºSUPERVISOR ACCESS CODE...... 0000                      º
º                                                       º
ºDATA CHANGE ACCESS CODE..... 0000                      º
º                                                       º
ºKEY CLICK ENABLE.............  YES                      º
º                                                       º
ºBACKLIGHT ENABLE.............  YES                      º
º                                                       º
º                                                       º
º                                                       º
º                                                       º
ºEND OF SUBMENU                                         º
ÈÍÍÍÍÍÍÍÍÍÍÍÍÍÍÍÍÍÍÍÍÍÍÍÍÍÍÍÍÍÍÍÍÍÍÍÍÍÍÍÍÍÍÍÍÍ¼

ÉÍÍÍÍÍÍÍÍÍÍÍÍÍÍÍÍÍÍÍÍÍÍÍÍÍÍÍÍÍÍÍÍÍÍÍÍÍÍÍÍÍÍÍÍÍ»
º                  MMU PROGRAM                          º
ºCAN SERVE WITH:                                        º
º             1 1 1 1 1 1 1                             º
ºCHANNEL      6 5 4 3 2 1 0 9 8 7 6 5 4 3 2º
º  1          . . . . . . . . . . . . . . .º
º  2          . . . . . . . . . . . . . .  º
º  3          . . . . . . . . . . . . .    º
º  4          . . . . . . . . . . . .      º
º  5          . . . . . . . . . . .        º
º  6          . . . . . . . . . .          º
º  7          . . . . . . . . .            º
º  8          . . . . . . . .              º
º  9          . . . . . . .                º
º 10          . . . . . .                  º
º 11          . . . . .                    º
ºADDITIONAL SCREEN(S)                                   º
ÈÍÍÍÍÍÍÍÍÍÍÍÍÍÍÍÍÍÍÍÍÍÍÍÍÍÍÍÍÍÍÍÍÍÍÍÍÍÍÍÍÍÍÍÍÍ¼
♀
ÉÍÍÍÍÍÍÍÍÍÍÍÍÍÍÍÍÍÍÍÍÍÍÍÍÍÍÍÍÍÍÍÍÍÍÍÍÍÍÍÍÍÍÍÍÍ»
º                  MMU PROGRAM                          º
ºCAN SERVE WITH:                                        º
º             1 1 1 1 1 1 1                             º
ºCHANNEL      6 5 4 3 2 1 0 9 8 7 6 5 4 3 2º
º 12          . . . .                                   º
º 13          . . .                                     º
º 14          . .                                       º
º 15          .                                         º
º                                                       º
º                                                       º
º                                                       º
º                                                       º
º                                                       º
º                                                       º
º                                                       º
ºEND OF SUBMENU                                         º
ÈÍÍÍÍÍÍÍÍÍÍÍÍÍÍÍÍÍÍÍÍÍÍÍÍÍÍÍÍÍÍÍÍÍÍÍÍÍÍÍÍÍÍÍÍÍ¼
♀
ÉÍÍÍÍÍÍÍÍÍÍÍÍÍÍÍÍÍÍÍÍÍÍÍÍÍÍÍÍÍÍÍÍÍÍÍÍÍÍÍÍÍÍÍÍÍ»
º*****************************************º
º*   ECONOLITE CONTROL PRODUCTS, INC.    *º
º*              ASC/2-2000               *º
```

```
º*          Copyright (C) 1992          *º
º*                                      *º
º* City of Ontario, T MffdM Engineering *º
º*  ASC/2-2M0MM Co figuratiMODMer m1.1  *º
º*                                      *º
º*   SOFTWARE ASSY             VERSION  *º
º*   BOOT            32783        1.25  *º
º*   MAIN PROGRAM    32787        1.59  *º
º*   HELP            32789        1.48  *º
º*   CONFIGURATION   32790       C8145  *º
º*                                      *º
º*                                      *º
º**************************************º
ÈÍÍÍÍÍÍÍÍÍÍÍÍÍÍÍÍÍÍÍÍÍÍÍÍÍÍÍÍÍÍÍÍÍÍÍÍÍÍ¼

ÉÍÍÍÍÍÍÍÍÍÍÍÍÍÍÍÍÍÍÍÍÍÍÍÍÍÍÍÍÍÍÍÍÍÍÍÍÍÍ»
º         CONTROLLER TIMING DATA             º
ºPHASE...   1...2...3...4...5...6...7...8º
ºMIN GRN.   0   7   8   8   0   0   0   8º
ºBIKE GRN   0   0   0   0   0   0   0   0º
ºCS MGRN.   0   0   0   0   0   0   0   0º
ºWALK....   0   0   0   4   0   0   0   0º
ºPED CLR.   0   7   0  23   0   7   0   7º
ºVEH EXT. 0.0 2.5 2.0 3.5 0.0 0.0 0.0 3.5º
ºVEH EXT2 0.0 0.0 0.0 0.0 0.0 0.0 0.0 0.0º
ºMAX EXT.   0  20  20  10   0   0   0  10º
ºMAX1....   0  20  20  30   0   0   0  30º
ºMAX2....   0  25  25  40   0   0   0  40º
ºMAX3....   0   0   0   0   0   0   0   0º
º                                          º
ºADDITIONAL SCREEN(S)              MORE->º
ÈÍÍÍÍÍÍÍÍÍÍÍÍÍÍÍÍÍÍÍÍÍÍÍÍÍÍÍÍÍÍÍÍÍÍÍÍÍÍ¼

ÉÍÍÍÍÍÍÍÍÍÍÍÍÍÍÍÍÍÍÍÍÍÍÍÍÍÍÍÍÍÍÍÍÍÍÍÍÍÍ»
º         CONTROLLER TIMING DATA             º
ºPHASE...   1...2...3...4...5...6...7...8º
ºYELLOW.. 3.0 3.0 5.0 5.0 3.0 3.0 3.0 5.0º
ºRED CLR. 0.0 2.0 2.0 2.0 0.0 0.0 0.0 2.0º
ºRED RVT. 0.0 5.0 5.0 5.0 0.0 0.0 0.0 5.0º
º                                          º
ºACT B4..   0   0   0   0   0   0   0   0º
ºSEC/ACT. 0.0 0.0 0.0 0.0 0.0 0.0 0.0 0.0º
ºMAX INI.   0   0   0   0   0   0   0   0º
ºTIME B4.   0   0   0  20   0   0   0  20º
ºCARS WT.   0   0   0   0   0   0   0   0º
ºTTREDUC.   0   0   0  15   0   0   0  15º
ºMIN GAP. 0.0 0.0 0.0 0.0 0.0 0.0 0.0 0.0º
º                                          º
º                                          º
ºEND OF SUBMENU                    MORE->º
ÈÍÍÍÍÍÍÍÍÍÍÍÍÍÍÍÍÍÍÍÍÍÍÍÍÍÍÍÍÍÍÍÍÍÍÍÍÍÍ¼

ÉÍÍÍÍÍÍÍÍÍÍÍÍÍÍÍÍÍÍÍÍÍÍÍÍÍÍÍÍÍÍÍÍÍÍÍÍÍÍ»
º         CONTROLLER TIMING DATA             º
ºPHASE...   9..10..11..12                  º
ºMIN GRN.   0   0   0   0                  º
ºBIKE GRN   0   0   0   0                  º
ºCS MGRN.   0   0   0   0                  º
ºWALK....   0   0   0   0                  º
ºPED CLR.   0   7   0   7                  º
ºVEH EXT. 0.0 0.0 0.0 0.0                  º
ºVEH EXT2 0.0 0.0 0.0 0.0                  º
```

```
ºMAX EXT.   0   0   0   0                 º
ºMAX1....   0   0   0   0                 º
ºMAX2....   0   0   0   0                 º
ºMAX3....   0   0   0   0                 º
ºDET MAX.   0   0   0   0                 º
º                                         º
ºADDITIONAL SCREEN(S)            <-MORE   º
ÈÍÍÍÍÍÍÍÍÍÍÍÍÍÍÍÍÍÍÍÍÍÍÍÍÍÍÍÍÍÍÍÍÍÍÍÍÍÍ¼

ÉÍÍÍÍÍÍÍÍÍÍÍÍÍÍÍÍÍÍÍÍÍÍÍÍÍÍÍÍÍÍÍÍÍÍÍÍÍÍ»
º          CONTROLLER TIMING DATA         º
ºPHASE...    9..10..11..12                º
ºYELLOW.. 3.0 3.0 3.0 3.0                 º
ºRED CLR. 0.0 0.0 0.0 0.0                 º
ºRED RVT. 0.0 0.0 0.0 0.0                 º
º                                         º
ºACT B4..   0   0   0   0                 º
ºSEC/ACT. 0.0 0.0 0.0 0.0                 º
ºMAX INI.   0   0   0   0                 º
ºTIME B4.   0   0   0   0                 º
ºCARS WT.   0   0   0   0                 º
ºTTREDUC.   0   0   0   0                 º
ºMIN GAP. 0.0 0.0 0.0 0.0                 º
º                                         º
º                                         º
ºEND OF SUBMENU                  <-MORE   º
ÈÍÍÍÍÍÍÍÍÍÍÍÍÍÍÍÍÍÍÍÍÍÍÍÍÍÍÍÍÍÍÍÍÍÍÍÍÍÍ¼

ÉÍÍÍÍÍÍÍÍÍÍÍÍÍÍÍÍÍÍÍÍÍÍÍÍÍÍÍÍÍÍÍÍÍÍÍÍÍÍ»
º         PHASE OVERLAP ASSIGNMENTS       º
ºOVERLAP CONSISTS OF PHASES:        1 1 1º
ºOVLP PHASE       1 2 3 4 5 6 7 8 9 0 1 2º
º     1           X . . . . . . . . . . .º
º     2           . X . . . . . . . . . .º
º     3           . . X . . . . . . . . .º
º     4           . . . X . . . . . . . .º
º     5           . . . . X . . . . . . .º
º     6           . . . . . X . . . . . .º
º     7           . . . . . . X . . . . .º
º     8           . . . . . . . X . . . .º
º     9           . . . . . . . . X . . .º
º    10           . . . . . . . . . X . .º
º    11           . . . . . . . . . . X .º
º    12           . . . . . . . . . . . Xº
ºEND OF SUBMENU                           º
ÈÍÍÍÍÍÍÍÍÍÍÍÍÍÍÍÍÍÍÍÍÍÍÍÍÍÍÍÍÍÍÍÍÍÍÍÍÍÍ¼

ÉÍÍÍÍÍÍÍÍÍÍÍÍÍÍÍÍÍÍÍÍÍÍÍÍÍÍÍÍÍÍÍÍÍÍÍÍÍÍ»
º          PED TIMING CARRYOVER           º
º                                         º
º        PHASE      CARRYOVER PHASE       º
º          1              0               º
º          2              0               º
º          3              0               º
º          4              0               º
º          5              0               º
º          6              0               º
º          7              0               º
º          8              0               º
º          9              0               º
º         10              0               º
º         11              0               º
º         12              0               º
```

```
ºEND OF SUBMENU                                 º
ÈÍÍÍÍÍÍÍÍÍÍÍÍÍÍÍÍÍÍÍÍÍÍÍÍÍÍÍÍÍÍÍÍÍÍÍÍÍÍÍÍÍÍ¼

ÉÍÍÍÍÍÍÍÍÍÍÍÍÍÍÍÍÍÍÍÍÍÍÍÍÍÍÍÍÍÍÍÍÍÍÍÍÍÍÍÍÍÍ»
º         CONTROLLER RECALL DATA                º
º                                               º
ºPHASE:                                 1 1 1ºº
ºPHASE.....  1 2 3 4 5 6 7 8 9 0 1 2º
ºLOCKING MEMORY.  . . . . . . . . . . . .º
ºVEHICLE RECALL.  . . . X . . . X . . . .º
ºPED RECALL.....  . . . . . . . . . . . .º
ºRECALL TO MAX..  . . . . . . . . . . . .º
ºSOFT RECALL....  . . . . . . . . . . . .º
ºDON'T REST HERE  . . . . . . . . . . . .º
ºPED DARK N/CALL  . . . . . . . . . . . .º
º                                               º
º                                               º
º                                               º
º                                               º
ºEND OF SUBMENU                                 º
ÈÍÍÍÍÍÍÍÍÍÍÍÍÍÍÍÍÍÍÍÍÍÍÍÍÍÍÍÍÍÍÍÍÍÍÍÍÍÍÍÍÍÍ¼

ÉÍÍÍÍÍÍÍÍÍÍÍÍÍÍÍÍÍÍÍÍÍÍÍÍÍÍÍÍÍÍÍÍÍÍÍÍÍÍÍÍÍÍ»
º         CONTROLLER OVERLAP DATA               º
º                                               º
º                                       1 1 1ºº
ºOVERLAP A.....   1 2 3 4 5 6 7 8 9 0 1 2º
ºSTANDARD......   . . . . . . . . . . . .º
ºPROTECTED.....   . . . . . . . . . . . .º
ºPERMITTED.....   . . . . . . . . . . . .º
ºENABLE LAG....   . . . . . . . . . . . .º
ºENABLE LEAD...   . . . . . . . . . . . .º
ºSPARE.........   . . . . . . . . . . . .º
º                                               º
º     ADVANCE GREEN TIMER      0.0              º
º     LAG/LEAD GREEN TIMER     0.0              º
º     LAG/LEAD YELLOW TIMER    0.0              º
º     LAG/LEAD RED TIMER       0.0              º
ºADDITIONAL PAGE(S)                             º
ÈÍÍÍÍÍÍÍÍÍÍÍÍÍÍÍÍÍÍÍÍÍÍÍÍÍÍÍÍÍÍÍÍÍÍÍÍÍÍÍÍÍÍ¼

ÉÍÍÍÍÍÍÍÍÍÍÍÍÍÍÍÍÍÍÍÍÍÍÍÍÍÍÍÍÍÍÍÍÍÍÍÍÍÍÍÍÍÍ»
º         CONTROLLER OVERLAP DATA               º
º                                               º
º                                       1 1 1ºº
ºOVERLAP B.....   1 2 3 4 5 6 7 8 9 0 1 2º
ºSTANDARD......   . . . . . . . . . . . .º
ºPROTECTED.....   . . . . . . . . . . . .º
ºPERMITTED.....   . . . . . . . . . . . .º
ºENABLE LAG....   . . . . . . . . . . . .º
ºENABLE LEAD...   . . . . . . . . . . . .º
ºSPARE.........   . . . . . . . . . . . .º
º                                               º
º     ADVANCE GREEN TIMER      0.0              º
º     LAG/LEAD GREEN TIMER     0.0              º
º     LAG/LEAD YELLOW TIMER    0.0              º
º     LAG/LEAD RED TIMER       0.0              º
ºADDITIONAL PAGE(S)                             º
ÈÍÍÍÍÍÍÍÍÍÍÍÍÍÍÍÍÍÍÍÍÍÍÍÍÍÍÍÍÍÍÍÍÍÍÍÍÍÍÍÍÍÍ¼

ÉÍÍÍÍÍÍÍÍÍÍÍÍÍÍÍÍÍÍÍÍÍÍÍÍÍÍÍÍÍÍÍÍÍÍÍÍÍÍÍÍÍÍ»
º         CONTROLLER OVERLAP DATA               º
º                                               º
```

```
º                                        1 1 1º
ºOVERLAP C.....   1 2 3 4 5 6 7 8 9 0 1 2º
ºSTANDARD......   . . . . . . . . . . . .º
ºPROTECTED.....   . . . . . . . . . . . .º
ºPERMITTED.....   . . . . . . . . . . . .º
ºENABLE LAG....   . . . . . . . . . . . .º
ºENABLE LEAD...   . . . . . . . . . . . .º
ºSPARE.........   . . . . . . . . . . . .º
º                                         º
º     ADVANCE GREEN TIMER      0.0        º
º     LAG/LEAD GREEN TIMER     0.0        º
º     LAG/LEAD YELLOW TIMER    0.0        º
º     LAG/LEAD RED TIMER       0.0        º
ºADDITIONAL PAGE(S)                       º
ÈÍÍÍÍÍÍÍÍÍÍÍÍÍÍÍÍÍÍÍÍÍÍÍÍÍÍÍÍÍÍÍÍÍÍÍÍÍÍÍÍÍ¼

ÉÍÍÍÍÍÍÍÍÍÍÍÍÍÍÍÍÍÍÍÍÍÍÍÍÍÍÍÍÍÍÍÍÍÍÍÍÍÍÍÍÍ»
º         CONTROLLER OVERLAP DATA         º
º                                         º
º                                        1 1 1º
ºOVERLAP D.....   1 2 3 4 5 6 7 8 9 0 1 2º
ºSTANDARD......   . . . . . . . . . . . .º
ºPROTECTED.....   . . . . . . . . . . . .º
ºPERMITTED.....   . . . . . . . . . . . .º
ºENABLE LAG....   . . . . . . . . . . . .º
ºENABLE LEAD...   . . . . . . . . . . . .º
ºSPARE.........   . . . . . . . . . . . .º
º                                         º
º     ADVANCE GREEN TIMER      0.0        º
º     LAG/LEAD GREEN TIMER     0.0        º
º     LAG/LEAD YELLOW TIMER    0.0        º
º     LAG/LEAD RED TIMER       0.0        º
ºADDITIONAL PAGE(S)                       º
ÈÍÍÍÍÍÍÍÍÍÍÍÍÍÍÍÍÍÍÍÍÍÍÍÍÍÍÍÍÍÍÍÍÍÍÍÍÍÍÍÍÍ¼

♀

ÉÍÍÍÍÍÍÍÍÍÍÍÍÍÍÍÍÍÍÍÍÍÍÍÍÍÍÍÍÍÍÍÍÍÍÍÍÍÍÍÍÍ»
º        PED OVERLAP ASSIGNMENTS          º
ºOVERLAP CONSISTS OF PHASES:        1 1 1º
ºOVLP PHASE       1 2 3 4 5 6 7 8 9 0 1 2º
º     1           . . . . . . . . . . . .º
º     2           . . . . . . . . . . . .º
º     3           . . . . . . . . . . . .º
º     4           . . . . . . . . . . . .º
º     5           . . . . . . . . . . . .º
º     6           . . . . . . . . . . . .º
º     7           . . . . . . . . . . . .º
º     8           . . . . . . . . . . . .º
º     9           . . . . . . . . . . . .º
º    10           . . . . . . . . . . . .º
º    11           . . . . . . . . . . . .º
º    12           . . . . . . . . . . . .º
ºEND OF SUBMENU                           º
ÈÍÍÍÍÍÍÍÍÍÍÍÍÍÍÍÍÍÍÍÍÍÍÍÍÍÍÍÍÍÍÍÍÍÍÍÍÍÍÍÍÍ¼

ÉÍÍÍÍÍÍÍÍÍÍÍÍÍÍÍÍÍÍÍÍÍÍÍÍÍÍÍÍÍÍÍÍÍÍÍÍÍÍÍÍÍ»
º       CONTROLLER START/FLASH DATA       º
º                                        1 1 1º
ºPHASE.........   1 2 3 4 5 6 7 8 9 0 1 2º
ºPOWER START....  . X . . . . . . . . . .º
ºEXTERNAL START.  . X . . . . . . . . . .º
ºENTRY REM FLASH  . . . X . . . X . . . .º
ºEXIT REM FLASH.  . X . . . . . . . . . .º
ºREM FLASH YEL..  . . . . . . . . . . . .º
```

```
ºFL TOGETHER PHS  . X . X . . . X . . . .º
ºFL TOGETHER OVLPS A: .  B: .  C: .  D: .º
º                                         º
ºPOWER START.............   YELLOW       º
ºEXTERNAL START..........   YELLOW       º
ºPOWER START ALL RED TIME..  0 SECONDS   º
ºPOWER START FLASH TIME....  0 SECONDS   º
ºADDITIONAL PAGE(S)                       º
ÈÍÍÍÍÍÍÍÍÍÍÍÍÍÍÍÍÍÍÍÍÍÍÍÍÍÍÍÍÍÍÍÍÍÍÍÍÍÍ¼

ÉÍÍÍÍÍÍÍÍÍÍÍÍÍÍÍÍÍÍÍÍÍÍÍÍÍÍÍÍÍÍÍÍÍÍÍÍÍÍ»
º       CONTROLLER START/FLASH DATA       º
º                                         º
ºREMOTE FLASH OPTIONS:                    º
º                                         º
ºOUT OF FLASH YELLOW..... X               º
ºOUT OF FLASH ALL RED..... .              º
ºMINIMUM RECALL.......... .               º
ºSPARE................... .               º
ºFLASH THRU LOAD SWITCHES.... .           º
ºCYCLE THROUGH PHASES..... .              º
º                                         º
º                                         º
º                                         º
º                                         º
º                                         º
ºEND OF SUBMENU                           º
ÈÍÍÍÍÍÍÍÍÍÍÍÍÍÍÍÍÍÍÍÍÍÍÍÍÍÍÍÍÍÍÍÍÍÍÍÍÍÍ¼

ÉÍÍÍÍÍÍÍÍÍÍÍÍÍÍÍÍÍÍÍÍÍÍÍÍÍÍÍÍÍÍÍÍÍÍÍÍÍÍ»
º            NO SERVE PHASES              º
ºCANNOT SERVE WITH: 1 1 1                 º
ºPHASE              2 1 0 9 8 7 6 5 4 3 2º
º  1                . . . . . . . . . . .º
º  2                . . . . . . . . . .  º
º  3                . . . . . . . . .    º
º  4                . . . . . . . .      º
º  5                . . . . . . .        º
º  6                . . . . . .          º
º  7                . . . . .            º
º  8                . . . .              º
º  9                . . .                º
º 10                . .                  º
º 11                .                    º
º                                         º
ºEND OF SUBMENU                           º
ÈÍÍÍÍÍÍÍÍÍÍÍÍÍÍÍÍÍÍÍÍÍÍÍÍÍÍÍÍÍÍÍÍÍÍÍÍÍÍ¼

ÉÍÍÍÍÍÍÍÍÍÍÍÍÍÍÍÍÍÍÍÍÍÍÍÍÍÍÍÍÍÍÍÍÍÍÍÍÍÍ»
º                 DIMMING                 º
º                                         º
ºLOAD SWITCH....  1..2..3..4..5..6..7..8 º
ºDIM GRN/WLK....  .  .  .  .  .  .  .  . º
ºDIM YEL/PC.....  .  .  .  .  .  .  .  . º
ºDIM RED/DW.....  .  .  .  .  .  .  .  . º
º                                         º
ºLOAD SWITCH....  9.10.11.12.13.14.15.16 º
ºDIM GRN/WLK....  .  .  .  .  .  .  .  . º
ºDIM YEL/PC.....  .  .  .  .  .  .  .  . º
ºDIM RED/DW.....  .  .  .  .  .  .  .  . º
º                                         º
º                                         º
º                                         º
```

```
º                                                    º
ºEND OF SUBMENU                                      º
ÈÍÍÍÍÍÍÍÍÍÍÍÍÍÍÍÍÍÍÍÍÍÍÍÍÍÍÍÍÍÍÍÍÍÍÍÍÍÍÍÍÍÍÍÍÍ¼

ÉÍÍÍÍÍÍÍÍÍÍÍÍÍÍÍÍÍÍÍÍÍÍÍÍÍÍÍÍÍÍÍÍÍÍÍÍÍÍÍÍÍÍÍÍÍ»
º         CONTROLLER OPTION DATA                     º
º                                          1 1 1     º
ºPHASE.....  1 2 3 4 5 6 7 8 9 0 1 2     º
ºGUAR PASSAGE...  . . . . . . . . . . . .     º
ºNONACTUATED I..  . . . . . . . . . . . .     º
ºNONACTUATED II.  . . . . . . . . . . . .     º
ºDUAL ENTRY.....  . . . . . . . . . . . .     º
ºCOND SERVICE...  . . X . . . . . . . . .     º
ºCOND RESERVICE.  . . . . . . . . . . . .     º
ºREST IN WALK...  . . . . . . . . . . . .     º
ºFLASHING WALK..  . . . . . . . . . . . .     º
º                                                    º
º----- FIVE SECTION LEFT TURN HEADS -----     º
º   5-2 :  .     7-4 :  .     1-6 :  .     º
º   3-8 :  .    11-10:  .    9-12 :  .     º
ºADDITIONAL PAGE(S)                                  º
ÈÍÍÍÍÍÍÍÍÍÍÍÍÍÍÍÍÍÍÍÍÍÍÍÍÍÍÍÍÍÍÍÍÍÍÍÍÍÍÍÍÍÍÍÍÍ¼
♀
ÉÍÍÍÍÍÍÍÍÍÍÍÍÍÍÍÍÍÍÍÍÍÍÍÍÍÍÍÍÍÍÍÍÍÍÍÍÍÍÍÍÍÍÍÍÍ»
º         CONTROLLER OPTION DATA                     º
ºDUAL ENTRY..................... OFF     º
ºCOND SERVICE ENABLE.............  ON     º
ºCOND SERVICE DET X SWITCHING.... OFF     º
ºPED CLR PROTECT................. OFF     º
ºSPEC PREEMPT OVLP FLASH......... OFF     º
ºLOCK DETECTORS IN RED ONLY...... OFF     º
ºRESERVED........................ OFF     º
ºRESERVED........................ OFF     º
ºBACKUP PROTECTION GROUP 1....... OFF     º
ºBACKUP PROTECTION GROUP 2....... OFF     º
ºBACKUP PROTECTION GROUP 3....... OFF     º
ºSIMULTANEOUS GAP GROUP 1........ OFF     º
ºSIMULTANEOUS GAP GROUP 2........  ON     º
ºSIMULTANEOUS GAP GROUP 3........ OFF     º
ºEND OF SUBMENU                                      º
ÈÍÍÍÍÍÍÍÍÍÍÍÍÍÍÍÍÍÍÍÍÍÍÍÍÍÍÍÍÍÍÍÍÍÍÍÍÍÍÍÍÍÍÍÍÍ¼
♀
ÉÍÍÍÍÍÍÍÍÍÍÍÍÍÍÍÍÍÍÍÍÍÍÍÍÍÍÍÍÍÍÍÍÍÍÍÍÍÍÍÍÍÍÍÍÍ»
º*****************************************º
º*   ECONOLITE CONTROL PRODUCTS, INC.    *º
º*            ASC/2-2000                 *º
º*          Copyright (C) 1992           *º
º*                                       *º
º* City of Ontario, T MffdM Engineering *º
º*  ASC/2-2M0MM Co figuratiMODMer m1.1   *º
º*                                       *º
º*   SOFTWARE ASSY             VERSION   *º
º*   BOOT           32783        1.25    *º
º*   MAIN PROGRAM   32787        1.59    *º
º*   HELP           32789        1.48    *º
º*   CONFIGURATION  32790       C8145    *º
º*                                       *º
º*                                       *º
º*****************************************º
ÈÍÍÍÍÍÍÍÍÍÍÍÍÍÍÍÍÍÍÍÍÍÍÍÍÍÍÍÍÍÍÍÍÍÍÍÍÍÍÍÍÍÍÍÍÍ¼

ÉÍÍÍÍÍÍÍÍÍÍÍÍÍÍÍÍÍÍÍÍÍÍÍÍÍÍÍÍÍÍÍÍÍÍÍÍÍÍÍÍÍÍÍÍÍ»
º          COORDINATOR OPTIONS                     º
```

```
º                                                  º
ºSPLIT UNITS..     %    ACT CRD PHASE..  Xº
ºOFFSET UNITS.     %    ACT WALK/REST..  .º
ºINTERCNT FMT.   STD    INHIBIT MAX....  Xº
ºINTERCNT SRC.   NIC    MAX2 SELECT....  .º
ºRESYNC COUNT.     0    MULTISYNC......  .º
ºTRANSITION...   SMOOTH FLOAT FORCE OFF  .º
ºDWELL PERIOD.     0%                     º
º                                         º
º                                         º
º                             A B C D E F º
ºFREE ALTERNATE SEQUENCE     . . . . . .  º
º                                         º
º                                         º
ºEND OF SUBMENU                           º
ÈÍÍÍÍÍÍÍÍÍÍÍÍÍÍÍÍÍÍÍÍÍÍÍÍÍÍÍÍÍÍÍÍÍÍÍÍÍÍÍÍÍÍ¼

ÉÍÍÍÍÍÍÍÍÍÍÍÍÍÍÍÍÍÍÍÍÍÍÍÍÍÍÍÍÍÍÍÍÍÍÍÍÍÍÍÍÍÍ»
º      COORD MANUAL AND SPLIT DEMAND      º
º                                         º
ºMANUAL ENABLE:  ON    MANUAL PATTERN   0º
º                                         º
º-----------------------------------------º
º                                         º
ºSPLIT DEMAND:        DEMAND 1  DEMAND 2  º
ºDEMAND CALL TIME        0s        0s     º
ºDEMAND CYCLE COUNT      0         0      º
º                                         º
º                                  1 1 1º
ºDEMAND PHASE:    1 2 3 4 5 6 7 8 9 0 1 2º
ºDEMAND 1 PHASES  . . . . . . . . . . . .º
ºDEMAND 2 PHASES  . . . . . . . . . . . .º
º                                         º
ºEND OF SUBMENU                           º
ÈÍÍÍÍÍÍÍÍÍÍÍÍÍÍÍÍÍÍÍÍÍÍÍÍÍÍÍÍÍÍÍÍÍÍÍÍÍÍÍÍÍÍ¼

ÉÍÍÍÍÍÍÍÍÍÍÍÍÍÍÍÍÍÍÍÍÍÍÍÍÍÍÍÍÍÍÍÍÍÍÍÍÍÍÍÍÍÍ»
º        COORD AUTO PERM MIN GREEN        º
º                                         º
º        PHASE   AUTO PERM MIN GRN        º
º          1              0s              º
º          2              0s              º
º          3              0s              º
º          4              0s              º
º          5              0s              º
º          6              0s              º
º          7              0s              º
º          8              0s              º
º          9              0s              º
º         10              0s              º
º         11              0s              º
º         12              0s              º
ºEND OF SUBMENU                           º
ÈÍÍÍÍÍÍÍÍÍÍÍÍÍÍÍÍÍÍÍÍÍÍÍÍÍÍÍÍÍÍÍÍÍÍÍÍÍÍÍÍÍÍ¼

ÉÍÍÍÍÍÍÍÍÍÍÍÍÍÍÍÍÍÍÍÍÍÍÍÍÍÍÍÍÍÍÍÍÍÍÍÍÍÍÍÍÍÍ»
ºCOORD PATTERN 31                         º
º                                         º
ºCYCLE LENGTH..... 100s  C/O/S.....  411 º
ºOFFSET.....  28%                         º
ºSPLITS:                                  º
ºPHASE  1)  0%   2) 27%   3) 20%   4) 53%º
ºPHASE  5)  0%   6)  0%   7)  0%   8) 73%º
```

```
ºPHASE  9)  0%  10)  0%  11)  0%  12)  0%º
º                                         º
ºVEH PERMISSIVE.......  [1]   0% [2]   0%º
ºVEH PERM 2 DISP.....   0%                 º
ºPHASE RESERVICE.....   .                  º
ºSPLIT EXTENSION/RING.  [1]   0% [2]   0%º
ºSPL DMD PATTERN......  [1]   0  [2]   0 º
ºXARTERY PATTERN.....   0                  º
ºADDITIONAL SCREEN(S)                     º
ÈÍÍÍÍÍÍÍÍÍÍÍÍÍÍÍÍÍÍÍÍÍÍÍÍÍÍÍÍÍÍÍÍÍÍÍÍÍÍ¼

ÉÍÍÍÍÍÍÍÍÍÍÍÍÍÍÍÍÍÍÍÍÍÍÍÍÍÍÍÍÍÍÍÍÍÍÍÍÍÍ»
º                                 1 1 1º
ºPHASE            1 2 3 4 5 6 7 8 9 0 1 2º
ºCOORD PHASES     . . . X . . . X . . . .º
ºVEHICLE RECALL   . . . . . . . . . . . .º
ºVEH MAX RECALL   . . . . . . . . . . . .º
ºPED RECALL       . . . . . . . . . . . .º
ºPHASE OMIT       . . . . . . . . . . . .º
ºSPARE            . . . . . . . . . . . .º
º                                         º
º                 A B C D E F             º
ºALT SEQUENCE:    X . . . . .             º
º                                         º
º                                         º
º                                         º
º                                         º
ºADDITIONAL SCREEN(S)                     º
ÈÍÍÍÍÍÍÍÍÍÍÍÍÍÍÍÍÍÍÍÍÍÍÍÍÍÍÍÍÍÍÍÍÍÍÍÍÍÍ¼

ÉÍÍÍÍÍÍÍÍÍÍÍÍÍÍÍÍÍÍÍÍÍÍÍÍÍÍÍÍÍÍÍÍÍÍÍÍÍÍ»
ºCOORD PATTERN 33                         º
º                                         º
ºCYCLE LENGTH..... 100s  C/O/S.....  611 º
ºOFFSET.....  40%                         º
ºSPLITS:                                  º
ºPHASE  1)  0%   2) 33%   3) 25%   4) 42%º
ºPHASE  5)  0%   6)  0%   7)  0%   8) 67%º
ºPHASE  9)  0%  10)  0%  11)  0%  12)  0%º
º                                         º
ºVEH PERMISSIVE.......  [1]   0% [2]   0%º
ºVEH PERM 2 DISP.....   0%                 º
ºPHASE RESERVICE.....   .                  º
ºSPLIT EXTENSION/RING.  [1]   0% [2]   0%º
ºSPL DMD PATTERN......  [1]   0  [2]   0 º
ºXARTERY PATTERN.....   0                  º
ºADDITIONAL SCREEN(S)                     º
ÈÍÍÍÍÍÍÍÍÍÍÍÍÍÍÍÍÍÍÍÍÍÍÍÍÍÍÍÍÍÍÍÍÍÍÍÍÍÍ¼

ÉÍÍÍÍÍÍÍÍÍÍÍÍÍÍÍÍÍÍÍÍÍÍÍÍÍÍÍÍÍÍÍÍÍÍÍÍÍÍ»
º                                 1 1 1º
ºPHASE            1 2 3 4 5 6 7 8 9 0 1 2º
ºCOORD PHASES     . . . X . . . X . . . .º
ºVEHICLE RECALL   . . . . . . . . . . . .º
ºVEH MAX RECALL   . . . . . . . . . . . .º
ºPED RECALL       . . . . . . . . . . . .º
ºPHASE OMIT       . . . . . . . . . . . .º
ºSPARE            . . . . . . . . . . . .º
º                                         º
º                 A B C D E F             º
ºALT SEQUENCE:    X . . . . .             º
º                                         º
º                                         º
```

```
º                                          º
º                                          º
ºADDITIONAL SCREEN(S)                      º
ÈÍÍÍÍÍÍÍÍÍÍÍÍÍÍÍÍÍÍÍÍÍÍÍÍÍÍÍÍÍÍÍÍÍÍÍÍÍÍ¼

ÉÍÍÍÍÍÍÍÍÍÍÍÍÍÍÍÍÍÍÍÍÍÍÍÍÍÍÍÍÍÍÍÍÍÍÍÍÍÍ»
ºCOORD PATTERN 51                          º
º                                          º
ºCYCLE LENGTH..... 100s  C/O/S.....  411 º
ºOFFSET...........  28%                    º
ºSPLITS:                                   º
ºPHASE  1)  0%   2) 27%   3) 20%   4) 53%º
ºPHASE  5)  0%   6)  0%   7)  0%   8) 73%º
ºPHASE  9)  0%  10)  0%  11)  0%  12)  0%º
º                                          º
ºVEH PERMISSIVE.......  [1]   0% [2]   0%º
ºVEH PERM 2 DISP...........   0%          º
ºPHASE RESERVICE...........   .           º
ºSPLIT EXTENSION/RING.  [1]   0% [2]   0%º
ºSPL DMD PATTERN......  [1]   0  [2]   0 º
ºXARTERY PATTERN...........   0           º
ºADDITIONAL SCREEN(S)                      º
ÈÍÍÍÍÍÍÍÍÍÍÍÍÍÍÍÍÍÍÍÍÍÍÍÍÍÍÍÍÍÍÍÍÍÍÍÍÍÍ¼

ÉÍÍÍÍÍÍÍÍÍÍÍÍÍÍÍÍÍÍÍÍÍÍÍÍÍÍÍÍÍÍÍÍÍÍÍÍÍÍ»
º                                  1 1 1   º
ºPHASE            1 2 3 4 5 6 7 8 9 0 1 2º
ºCOORD PHASES     . . . X . . . X . . . .º
ºVEHICLE RECALL   . . . . . . . . . . . .º
ºVEH MAX RECALL   . . . . . . . . . . . .º
ºPED RECALL       . . . . . . . . . . . .º
ºPHASE OMIT       . . . . . . . . . . . .º
ºSPARE            . . . . . . . . . . . .º
º                                          º
º                 A B C D E F              º
ºALT SEQUENCE:    X . . . . .              º
º                                          º
º                                          º
º                                          º
º                                          º
ºADDITIONAL SCREEN(S)                      º
ÈÍÍÍÍÍÍÍÍÍÍÍÍÍÍÍÍÍÍÍÍÍÍÍÍÍÍÍÍÍÍÍÍÍÍÍÍÍÍ¼

ÉÍÍÍÍÍÍÍÍÍÍÍÍÍÍÍÍÍÍÍÍÍÍÍÍÍÍÍÍÍÍÍÍÍÍÍÍÍÍ»
ºCOORD PATTERN 53                          º
º                                          º
ºCYCLE LENGTH..... 100s  C/O/S.....  611 º
ºOFFSET...........  36%                    º
ºSPLITS:                                   º
ºPHASE  1)  0%   2) 33%   3) 25%   4) 42%º
ºPHASE  5)  0%   6)  0%   7)  0%   8) 67%º
ºPHASE  9)  0%  10)  0%  11)  0%  12)  0%º
º                                          º
ºVEH PERMISSIVE.......  [1]   0% [2]   0%º
ºVEH PERM 2 DISP...........   0%          º
ºPHASE RESERVICE...........   .           º
ºSPLIT EXTENSION/RING.  [1]   0% [2]   0%º
ºSPL DMD PATTERN......  [1]   0  [2]   0 º
ºXARTERY PATTERN...........   0           º
ºADDITIONAL SCREEN(S)                      º
ÈÍÍÍÍÍÍÍÍÍÍÍÍÍÍÍÍÍÍÍÍÍÍÍÍÍÍÍÍÍÍÍÍÍÍÍÍÍÍ¼

ÉÍÍÍÍÍÍÍÍÍÍÍÍÍÍÍÍÍÍÍÍÍÍÍÍÍÍÍÍÍÍÍÍÍÍÍÍÍÍ»
```

```
º                                    1 1 1º
ºPHASE            1 2 3 4 5 6 7 8 9 0 1 2º
ºCOORD PHASES     . . . X . . . X . . . .º
ºVEHICLE RECALL   . . . . . . . . . . . .º
ºVEH MAX RECALL   . . . . . . . . . . . .º
ºPED RECALL       . . . . . . . . . . . .º
ºPHASE OMIT       . . . . . . . . . . . .º
ºSPARE            . . . . . . . . . . . .º
º                                        º
º                 A B C D E F            º
ºALT SEQUENCE:    X . . . . .            º
º                                        º
º                                        º
º                                        º
º                                        º
ºADDITIONAL SCREEN(S)                    º
ÈÍÍÍÍÍÍÍÍÍÍÍÍÍÍÍÍÍÍÍÍÍÍÍÍÍÍÍÍÍÍÍÍÍÍÍÍÍÍÍÍÍÍ¼

ÉÍÍÍÍÍÍÍÍÍÍÍÍÍÍÍÍÍÍÍÍÍÍÍÍÍÍÍÍÍÍÍÍÍÍÍÍÍÍÍÍÍÍ»
º****************************************º
º*   ECONOLITE CONTROL PRODUCTS, INC.   *º
º*            ASC/2-2000                *º
º*          Copyright (C) 1992          *º
º*                                      *º
º* City of Ontario, T MffdM Engineering *º
º*  ASC/2-2M0MM Co figuratiMODMer m1.1  *º
º*                                      *º
º*   SOFTWARE ASSY             VERSION  *º
º*   BOOT            32783        1.25  *º
º*   MAIN PROGRAM    32787        1.59  *º
º*   HELP            32789        1.48  *º
º*   CONFIGURATION   32790       C8145  *º
º*                                      *º
º*                                      *º
º****************************************º
ÈÍÍÍÍÍÍÍÍÍÍÍÍÍÍÍÍÍÍÍÍÍÍÍÍÍÍÍÍÍÍÍÍÍÍÍÍÍÍÍÍÍÍ¼

ÉÍÍÍÍÍÍÍÍÍÍÍÍÍÍÍÍÍÍÍÍÍÍÍÍÍÍÍÍÍÍÍÍÍÍÍÍÍÍÍÍÍÍ»
ºPRIORITY PREEMPTOR 1                1 1 1º
ºPHASE.........  1 2 3 4 5 6 7 8 9 0 1 2º
ºTERM PHASE OVLP  . . . . . . . . . . . .º
ºTRK CLR PHASE..  . . . . . . . . . . . .º
ºHOLD PHASES....  . . . . . . . . . . . .º
ºEXIT PHASES....  . . . . . . . . . . . .º
ºEXIT CALLS.....  . . . . . . . . . . . .º
ºSPARE.........  . . . . . . . . . . . .º
ºTERM OVERLAP...   A: .  B: .  C: .  D: .º
º                                        º
ºACTIVE......... NO  PED DARK....... NO  º
ºPRIORITY....... NO  PED ACTIVE..... NO  º
ºDET LOCK....... NO  ZERO PC TIME... NO  º
ºHOLD FLASH..... NO  PC THRU YELLOW. NO  º
ºTERM OVLP ASAP. NO  TERM PHASES.... NO  º
ºADDITIONAL PAGE(S)                      º
ÈÍÍÍÍÍÍÍÍÍÍÍÍÍÍÍÍÍÍÍÍÍÍÍÍÍÍÍÍÍÍÍÍÍÍÍÍÍÍÍÍÍÍ¼

ÉÍÍÍÍÍÍÍÍÍÍÍÍÍÍÍÍÍÍÍÍÍÍÍÍÍÍÍÍÍÍÍÍÍÍÍÍÍÍÍÍÍÍ»
º          PRIORITY PREEMPTOR 1          º
º                                        º
ºDON'T OVERRIDE FLASH.....  .            º
ºFLASH ALL OUTPUTS........  .            º
ºYELLOW-RED GOES GREEN....  .            º
ºENABLE MAX PREEMPT TIME..  .            º
```

```
ºACTIVE ONLY DURING HOLD..  .            º
ºNO CVM IN FLASH.........  .            º
ºFAST FLASH GRN ON HOLD...  .            º
ºOUT OF FLASH.............  GREEN        º
º                                        º
º                                        º
º                                        º
º                                        º
º                                        º
ºADDITIONAL PAGE(S)                      º
ÈÍÍÍÍÍÍÍÍÍÍÍÍÍÍÍÍÍÍÍÍÍÍÍÍÍÍÍÍÍÍÍÍÍÍÍÍÍÍ¼

ÉÍÍÍÍÍÍÍÍÍÍÍÍÍÍÍÍÍÍÍÍÍÍÍÍÍÍÍÍÍÍÍÍÍÍÍÍÍÍ»
º          PRIORITY PREEMPTOR 1          º
º                                        º
ºMAX TIME......  0  DURATION TIME..  0    º
ºMIN HOLD TIME.  0  DELAY TIME.....  0    º
ºMIN PED CLEAR.  0  INHIBIT TIME...  0    º
ºEXIT MAX......  0  HLD DELAY TIME.  0    º
º                                        º
º                GRN  YEL  RED           º
ºMINIMUM.......    0  0.0  0.0           º
ºTRACK CLEAR...    0  0.0  0.0           º
ºHOLD..........       0.0  0.0           º
º                                        º
º                                        º
º                                        º
º                                        º
ºEND OF SUBMENU                          º
ÈÍÍÍÍÍÍÍÍÍÍÍÍÍÍÍÍÍÍÍÍÍÍÍÍÍÍÍÍÍÍÍÍÍÍÍÍÍÍ¼

ÉÍÍÍÍÍÍÍÍÍÍÍÍÍÍÍÍÍÍÍÍÍÍÍÍÍÍÍÍÍÍÍÍÍÍÍÍÍÍ»
ºPRIORITY PREEMPTOR 2              1 1 1º
ºPHASE.........  1 2 3 4 5 6 7 8 9 0 1 2º
ºTERM PHASE OVLP  . . . . . . . . . . . .º
ºTRK CLR PHASE..  . . . . . . . . . . . .º
ºHOLD PHASES....  . . . . . . . . . . . .º
ºEXIT PHASES....  . . . . . . . . . . . .º
ºEXIT CALLS.....  . . . . . . . . . . . .º
ºSPARE..........  . . . . . . . . . . . .º
ºTERM OVERLAP...   A: .  B: .  C: .  D: .º
º                                        º
ºACTIVE......... NO  PED DARK....... NO  º
ºPRIORITY....... NO  PED ACTIVE..... NO  º
ºDET LOCK....... NO  ZERO PC TIME... NO  º
ºHOLD FLASH..... NO  PC THRU YELLOW. NO  º
ºTERM OVLP ASAP. NO  TERM PHASES.... NO  º
ºADDITIONAL PAGE(S)                      º
ÈÍÍÍÍÍÍÍÍÍÍÍÍÍÍÍÍÍÍÍÍÍÍÍÍÍÍÍÍÍÍÍÍÍÍÍÍÍÍ¼

ÉÍÍÍÍÍÍÍÍÍÍÍÍÍÍÍÍÍÍÍÍÍÍÍÍÍÍÍÍÍÍÍÍÍÍÍÍÍÍ»
º          PRIORITY PREEMPTOR 2          º
º                                        º
ºDON'T OVERRIDE FLASH.....  .            º
ºFLASH ALL OUTPUTS........  .            º
ºYELLOW-RED GOES GREEN....  .            º
ºENABLE MAX PREEMPT TIME..  .            º
ºACTIVE ONLY DURING HOLD..  .            º
ºNO CVM IN FLASH.........  .             º
ºFAST FLASH GRN ON HOLD...  .            º
ºOUT OF FLASH.............  GREEN        º
º                                        º
º                                        º
```

```
º                                        º
º                                        º
º                                        º
ºADDITIONAL PAGE(S)                      º
ÈÍÍÍÍÍÍÍÍÍÍÍÍÍÍÍÍÍÍÍÍÍÍÍÍÍÍÍÍÍÍÍÍÍÍÍÍ¼

ÉÍÍÍÍÍÍÍÍÍÍÍÍÍÍÍÍÍÍÍÍÍÍÍÍÍÍÍÍÍÍÍÍÍÍÍÍ»
º          PRIORITY PREEMPTOR 2          º
º                                        º
ºMAX TIME......  0  DURATION TIME..  0    º
ºMIN HOLD TIME.  0  DELAY TIME.....  0    º
ºMIN PED CLEAR.  0  INHIBIT TIME...  0    º
ºEXIT MAX......  0  HLD DELAY TIME.  0    º
º                                        º
º                GRN  YEL  RED           º
ºMINIMUM.......    0  0.0  0.0           º
ºTRACK CLEAR...    0  0.0  0.0           º
ºHOLD..........       0.0  0.0           º
º                                        º
ºLINKED PREEMPTOR.....  0                º
º                                        º
º                                        º
ºEND OF SUBMENU                          º
ÈÍÍÍÍÍÍÍÍÍÍÍÍÍÍÍÍÍÍÍÍÍÍÍÍÍÍÍÍÍÍÍÍÍÍÍÍ¼

ÉÍÍÍÍÍÍÍÍÍÍÍÍÍÍÍÍÍÍÍÍÍÍÍÍÍÍÍÍÍÍÍÍÍÍÍÍ»
ºPRIORITY PREEMPTOR 3              1 1 1º
ºPHASE..........  1 2 3 4 5 6 7 8 9 0 1 2º
ºTERM PHASE OVLP  . . . . . . . . . . . .º
ºTRK CLR PHASE..  . . . . . . . . . . . .º
ºHOLD PHASES....  . X . . . . . . . . . .º
ºEXIT PHASES....  . . . . . . . . . . . .º
ºEXIT CALLS.....  . . . . . . . . . . . .º
ºSPARE..........  . . . . . . . . . . . .º
ºTERM OVERLAP...   A: .  B: .  C: .  D: .º
º                                        º
ºACTIVE.........YES  PED DARK....... NO  º
ºPRIORITY....... NO  PED ACTIVE..... NO  º
ºDET LOCK....... NO  ZERO PC TIME... NO  º
ºHOLD FLASH..... NO  PC THRU YELLOW. NO  º
ºTERM OVLP ASAP. NO  TERM PHASES.... NO  º
ºADDITIONAL PAGE(S)                      º
ÈÍÍÍÍÍÍÍÍÍÍÍÍÍÍÍÍÍÍÍÍÍÍÍÍÍÍÍÍÍÍÍÍÍÍÍÍ¼

ÉÍÍÍÍÍÍÍÍÍÍÍÍÍÍÍÍÍÍÍÍÍÍÍÍÍÍÍÍÍÍÍÍÍÍÍÍ»
º          PRIORITY PREEMPTOR 3          º
º                                        º
ºDON'T OVERRIDE FLASH.....  X            º
ºFLASH ALL OUTPUTS........  .            º
ºYELLOW-RED GOES GREEN....  X            º
ºENABLE MAX PREEMPT TIME..  X            º
ºACTIVE ONLY DURING HOLD..  .            º
ºNO CVM IN FLASH..........  .            º
ºFAST FLASH GRN ON HOLD...  X            º
ºOUT OF FLASH.............  GREEN        º
º                                        º
º                                        º
º                                        º
º                                        º
º                                        º
ºADDITIONAL PAGE(S)                      º
ÈÍÍÍÍÍÍÍÍÍÍÍÍÍÍÍÍÍÍÍÍÍÍÍÍÍÍÍÍÍÍÍÍÍÍÍÍ¼
```

```
É͸͸͸͸͸͸͸͸͸͸͸͸͸͸͸͸͸͸͸͸͸͸͸͸͸͸͸͸͸͸͸͸͸͸͸͸͸»
º          PRIORITY PREEMPTOR 3          º
º                                        º
ºMAX TIME...... 90  DURATION TIME..  0   º
ºMIN HOLD TIME.  0  DELAY TIME.....  0   º
ºMIN PED CLEAR.  0  INHIBIT TIME...  0   º
ºEXIT MAX......  0  HLD DELAY TIME.  0   º
º                                        º
º                GRN  YEL  RED           º
ºMINIMUM.......    0  0.0  0.0           º
ºTRACK CLEAR...    0  0.0  0.0           º
ºHOLD..........       0.0  0.0           º
º                                        º
ºLINKED PREEMPTOR.....  0                º
º                                        º
º                                        º
ºEND OF SUBMENU                          º
È͸͸͸͸͸͸͸͸͸͸͸͸͸͸͸͸͸͸͸͸͸͸͸͸͸͸͸͸͸͸͸͸͸͸͸͸͸¼

É͸͸͸͸͸͸͸͸͸͸͸͸͸͸͸͸͸͸͸͸͸͸͸͸͸͸͸͸͸͸͸͸͸͸͸͸͸»
º          PRIORITY PREEMPTOR 4     1 1 1º
ºPHASE.........  1 2 3 4 5 6 7 8 9 0 1 2º
ºTERM PHASE OVLP  . . . . . . . . . . . .º
ºTRK CLR PHASE..  . . . . . . . . . . . .º
ºHOLD PHASES....  . . . . . . . . . . . .º
ºEXIT PHASES....  . . . . . . . . . . . .º
ºEXIT CALLS.....  . . . . . . . . . . . .º
ºSPARE.........  . . . . . . . . . . . .º
ºTERM OVERLAP...   A: .  B: .  C: .  D: .º
º                                        º
ºACTIVE......... NO  PED DARK....... NO  º
ºPRIORITY....... NO  PED ACTIVE..... NO  º
ºDET LOCK....... NO  ZERO PC TIME... NO  º
ºHOLD FLASH..... NO  PC THRU YELLOW. NO  º
ºTERM OVLP ASAP. NO  TERM PHASES.... NO  º
ºADDITIONAL PAGE(S)                      º
È͸͸͸͸͸͸͸͸͸͸͸͸͸͸͸͸͸͸͸͸͸͸͸͸͸͸͸͸͸͸͸͸͸͸͸͸͸¼

É͸͸͸͸͸͸͸͸͸͸͸͸͸͸͸͸͸͸͸͸͸͸͸͸͸͸͸͸͸͸͸͸͸͸͸͸͸»
º          PRIORITY PREEMPTOR 4          º
º                                        º
ºDON'T OVERRIDE FLASH.....  .            º
ºFLASH ALL OUTPUTS........  .            º
ºYELLOW-RED GOES GREEN....  .            º
ºENABLE MAX PREEMPT TIME..  .            º
ºACTIVE ONLY DURING HOLD..  .            º
ºNO CVM IN FLASH..........  .            º
ºFAST FLASH GRN ON HOLD...  .            º
ºOUT OF FLASH.............  GREEN        º
º                                        º
º                                        º
º                                        º
º                                        º
º                                        º
ºADDITIONAL PAGE(S)                      º
È͸͸͸͸͸͸͸͸͸͸͸͸͸͸͸͸͸͸͸͸͸͸͸͸͸͸͸͸͸͸͸͸͸͸͸͸͸¼

♀

É͸͸͸͸͸͸͸͸͸͸͸͸͸͸͸͸͸͸͸͸͸͸͸͸͸͸͸͸͸͸͸͸͸͸͸͸͸»
º          PRIORITY PREEMPTOR 4          º
º                                        º
ºMAX TIME......  0  DURATION TIME..  0   º
ºMIN HOLD TIME.  0  DELAY TIME.....  0   º
ºMIN PED CLEAR.  0  INHIBIT TIME...  0   º
```

```
ºEXIT MAX......  0  HLD DELAY TIME.  0   º
º                                        º
º                GRN  YEL  RED           º
ºMINIMUM.......    0  0.0  0.0           º
ºTRACK CLEAR...    0  0.0  0.0           º
ºHOLD..........       0.0  0.0           º
º                                        º
ºLINKED PREEMPTOR.....  0                º
º                                        º
º                                        º
ºEND OF SUBMENU                          º
ÈÍÍÍÍÍÍÍÍÍÍÍÍÍÍÍÍÍÍÍÍÍÍÍÍÍÍÍÍÍÍÍÍÍÍÍÍÍÍ¼

ÉÍÍÍÍÍÍÍÍÍÍÍÍÍÍÍÍÍÍÍÍÍÍÍÍÍÍÍÍÍÍÍÍÍÍÍÍÍÍ»
ºPRIORITY PREEMPTOR 5                1 1 1º
ºPHASE..........  1 2 3 4 5 6 7 8 9 0 1 2º
ºTERM PHASE OVLP  . . . . . . . . . . . .º
ºTRK CLR PHASE..  . . . . . . . . . . . .º
ºHOLD PHASES....  . . . X . . . . . . . .º
ºEXIT PHASES....  . . . . . . . . . . . .º
ºEXIT CALLS.....  . . . . . . . . . . . .º
ºSPARE..........  . . . . . . . . . . . .º
ºTERM OVERLAP...   A: .  B: .  C: .  D: .º
º                                        º
ºACTIVE.........YES  PED DARK....... NO  º
ºPRIORITY....... NO  PED ACTIVE..... NO  º
ºDET LOCK....... NO  ZERO PC TIME... NO  º
ºHOLD FLASH..... NO  PC THRU YELLOW. NO  º
ºTERM OVLP ASAP. NO  TERM PHASES.... NO  º
ºADDITIONAL PAGE(S)                      º
ÈÍÍÍÍÍÍÍÍÍÍÍÍÍÍÍÍÍÍÍÍÍÍÍÍÍÍÍÍÍÍÍÍÍÍÍÍÍÍ¼

ÉÍÍÍÍÍÍÍÍÍÍÍÍÍÍÍÍÍÍÍÍÍÍÍÍÍÍÍÍÍÍÍÍÍÍÍÍÍÍ»
º          PRIORITY PREEMPTOR 5          º
º                                        º
ºDON'T OVERRIDE FLASH.....  X            º
ºFLASH ALL OUTPUTS........  .            º
ºYELLOW-RED GOES GREEN....  X            º
ºENABLE MAX PREEMPT TIME..  X            º
ºACTIVE ONLY DURING HOLD..  .            º
ºNO CVM IN FLASH..........  .            º
ºFAST FLASH GRN ON HOLD...  X            º
ºOUT OF FLASH.............  GREEN        º
º                                        º
º                                        º
º                                        º
º                                        º
º                                        º
ºADDITIONAL PAGE(S)                      º
ÈÍÍÍÍÍÍÍÍÍÍÍÍÍÍÍÍÍÍÍÍÍÍÍÍÍÍÍÍÍÍÍÍÍÍÍÍÍÍ¼

ÉÍÍÍÍÍÍÍÍÍÍÍÍÍÍÍÍÍÍÍÍÍÍÍÍÍÍÍÍÍÍÍÍÍÍÍÍÍÍ»
º          PRIORITY PREEMPTOR 5          º
º                                        º
ºMAX TIME...... 90  DURATION TIME..  0   º
ºMIN HOLD TIME.  0  DELAY TIME.....  0   º
ºMIN PED CLEAR.  5  INHIBIT TIME...  0   º
ºEXIT MAX......  0  HLD DELAY TIME.  0   º
º                                        º
º                GRN  YEL  RED           º
ºMINIMUM.......    0  0.0  0.0           º
ºTRACK CLEAR...    0  0.0  0.0           º
ºHOLD..........       0.0  0.0           º
```

```
º                                                  º
ºLINKED PREEMPTOR.....  0                          º
º                                                  º
º                                                  º
ºEND OF SUBMENU                                    º
ÈÍÍÍÍÍÍÍÍÍÍÍÍÍÍÍÍÍÍÍÍÍÍÍÍÍÍÍÍÍÍÍÍÍÍÍÍÍÍÍÍÍÍ¼

ÉÍÍÍÍÍÍÍÍÍÍÍÍÍÍÍÍÍÍÍÍÍÍÍÍÍÍÍÍÍÍÍÍÍÍÍÍÍÍÍÍÍÍ»
ºPRIORITY PREEMPTOR 6                    1 1 1º
ºPHASE.....  1 2 3 4 5 6 7 8 9 0 1 2º
ºTERM PHASE OVLP  . . . . . .º
ºTRK CLR PHASE..  . . . . . .º
ºHOLD PHASES....  . . X . . . . X . . . .º
ºEXIT PHASES....  . . . . . .º
ºEXIT CALLS.....  . . . . . .º
ºSPARE.....  . . . . . .º
ºTERM OVERLAP...   A: .  B: .  C: .  D: .º
º                                                  º
ºACTIVE.....YES  PED DARK....... NO  º
ºPRIORITY....... NO  PED ACTIVE..... NO  º
ºDET LOCK....... NO  ZERO PC TIME... NO  º
ºHOLD FLASH..... NO  PC THRU YELLOW. NO  º
ºTERM OVLP ASAP. NO  TERM PHASES.... NO  º
ºADDITIONAL PAGE(S)                                º
ÈÍÍÍÍÍÍÍÍÍÍÍÍÍÍÍÍÍÍÍÍÍÍÍÍÍÍÍÍÍÍÍÍÍÍÍÍÍÍÍÍÍÍ¼

ÉÍÍÍÍÍÍÍÍÍÍÍÍÍÍÍÍÍÍÍÍÍÍÍÍÍÍÍÍÍÍÍÍÍÍÍÍÍÍÍÍÍÍ»
º          PRIORITY PREEMPTOR 6                    º
º                                                  º
ºDON'T OVERRIDE FLASH.....  X                      º
ºFLASH ALL OUTPUTS........  .                      º
ºYELLOW-RED GOES GREEN....  X                      º
ºENABLE MAX PREEMPT TIME..  X                      º
ºACTIVE ONLY DURING HOLD..  .                      º
ºNO CVM IN FLASH..........  .                      º
ºFAST FLASH GRN ON HOLD...  X                      º
ºOUT OF FLASH.............  GREEN                  º
º                                                  º
º                                                  º
º                                                  º
º                                                  º
º                                                  º
ºADDITIONAL PAGE(S)                                º
ÈÍÍÍÍÍÍÍÍÍÍÍÍÍÍÍÍÍÍÍÍÍÍÍÍÍÍÍÍÍÍÍÍÍÍÍÍÍÍÍÍÍÍ¼

ÉÍÍÍÍÍÍÍÍÍÍÍÍÍÍÍÍÍÍÍÍÍÍÍÍÍÍÍÍÍÍÍÍÍÍÍÍÍÍÍÍÍÍ»
º          PRIORITY PREEMPTOR 6                    º
º                                                  º
ºMAX TIME..... 90  DURATION TIME..  0   º
ºMIN HOLD TIME.  0  DELAY TIME.....  0   º
ºMIN PED CLEAR.  0  INHIBIT TIME...  0   º
ºEXIT MAX.....  0  HLD DELAY TIME.  0   º
º                                                  º
º                GRN  YEL  RED                     º
ºMINIMUM.......    0  0.0  0.0                     º
ºTRACK CLEAR...    0  0.0  0.0                     º
ºHOLD..........       0.0  0.0                     º
º                                                  º
ºLINKED PREEMPTOR.....  0                          º
º                                                  º
º                                                  º
ºEND OF SUBMENU                                    º
ÈÍÍÍÍÍÍÍÍÍÍÍÍÍÍÍÍÍÍÍÍÍÍÍÍÍÍÍÍÍÍÍÍÍÍÍÍÍÍÍÍÍÍ¼
```

```
É͸͸͸͸͸͸͸͸͸͸͸͸͸͸͸͸͸͸͸͸͸͸͸͸͸͸͸͸͸͸͸͸͸͸͸͸͸»
º              BUS PREEMPTOR                          º
º                                                     º
º                     - BUS PREEMPTOR -               º
º                      1    2    3    4               º
ºPREEMPTOR ACTIVE.     .    .    .    .               º
ºDETECTOR LOCK....     .    .    .    .               º
ºMAXIMUM TIME.....     0    0    0    0               º
ºRESERVICE TIME...     0    0    0    0               º
ºDELAY TIME.......     0    0    0    0               º
ºINHIBIT TIME.....     0    0    0    0               º
ºENTRANCE GREEN...     0    0    0    0               º
ºENTRANCE PED CLR.     0    0    0    0               º
ºENTRANCE YELLOW..   0.0  0.0  0.0  0.0               º
ºENTRANCE RED.....   0.0  0.0  0.0  0.0               º
ºMIN HOLD TIME....     0    0    0    0               º
ºADDITIONAL PAGE(S)                                   º
È͸͸͸͸͸͸͸͸͸͸͸͸͸͸͸͸͸͸͸͸͸͸͸͸͸͸͸͸͸͸͸͸͸͸͸͸͸¼

É͸͸͸͸͸͸͸͸͸͸͸͸͸͸͸͸͸͸͸͸͸͸͸͸͸͸͸͸͸͸͸͸͸͸͸͸͸»
º              BUS PREEMPTOR                          º
º                                                     º
º                  ------ HOLD PHASE -----º
º                                        1 1 1º
º                  1 2 3 4 5 6 7 8 9 0 1 2º
ºPREEMPTOR 1....   . . . . . . . . . . . .º
ºPREEMPTOR 2....   . . . . . . . . . . . .º
ºPREEMPTOR 3....   . . . . . . . . . . . .º
ºPREEMPTOR 4....   . . . . . . . . . . . .º
º                                                     º
º                                                     º
º                                                     º
º                                                     º
º                                                     º
º                                                     º
ºEND OF SUBMENU                                       º
È͸͸͸͸͸͸͸͸͸͸͸͸͸͸͸͸͸͸͸͸͸͸͸͸͸͸͸͸͸͸͸͸͸͸͸͸͸¼

É͸͸͸͸͸͸͸͸͸͸͸͸͸͸͸͸͸͸͸͸͸͸͸͸͸͸͸͸͸͸͸͸͸͸͸͸͸»
º*************************************º
º*   ECONOLITE CONTROL PRODUCTS, INC.   *º
º*             ASC/2-2000               *º
º*          Copyright (C) 1992          *º
º*                                      *º
º* City of Ontario, T MffdM Engineering *º
º*  ASC/2-2M0MM Co figuratiMODMer m1.1  *º
º*                                      *º
º*   SOFTWARE ASSY             VERSION  *º
º*   BOOT            32783        1.25  *º
º*   MAIN PROGRAM    32787        1.59  *º
º*   HELP            32789        1.48  *º
º*   CONFIGURATION   32790       C8145  *º
º*                                      *º
º*                                      *º
º*************************************º
È͸͸͸͸͸͸͸͸͸͸͸͸͸͸͸͸͸͸͸͸͸͸͸͸͸͸͸͸͸͸͸͸͸͸͸͸͸¼

É͸͸͸͸͸͸͸͸͸͸͸͸͸͸͸͸͸͸͸͸͸͸͸͸͸͸͸͸͸͸͸͸͸͸͸͸͸»
º       NIC/TOD CLOCK/CALENDAR DATA                   º
º                                                     º
º                                                     º
ºDATE SET:  2/22/18  | ENTER DATE/TIME                º
```

```
ºTIME SET:  8:00:40  | THEN PRESS ENTER  º
º                                       º
ºMANUAL NIC PROGRAM STEP    0           º
ºMANUAL TOD PROGRAM STEP    0           º
º                                       º
ºSYNC REFERENCE TIME    0:00            º
ºSYNC REFERENCE.........REFERENCE TIME  º
º                                       º
ºWEEK 1 BEGINS ON 1ST SUNDAY  .         º
ºDISABLE DAYLIGHT SAVINGS     .         º
ºDST BEGINS LAST SUNDAY       .         º
ºEND OF SUBMENU                         º
ÈÍÍÍÍÍÍÍÍÍÍÍÍÍÍÍÍÍÍÍÍÍÍÍÍÍÍÍÍÍÍÍÍÍÍÍÍÍÍ¼

ÉÍÍÍÍÍÍÍÍÍÍÍÍÍÍÍÍÍÍÍÍÍÍÍÍÍÍÍÍÍÍÍÍÍÍÍÍÍÍ»
º         NIC/TOD WEEKLY PROGRAMS       º
ºWEEK  SUN  MON  TUE  WED  THU  FRI  SAT º
º  1    2    1    1    1    1    1    2  º
º  2    2    1    1    1    1    1    2  º
º  3    2    1    1    1    1    1    2  º
º  4    2    1    1    1    1    1    2  º
º  5    2    1    1    1    1    1    2  º
º  6    2    1    1    1    1    1    2  º
º  7    2    1    1    1    1    1    2  º
º  8    2    1    1    1    1    1    2  º
º  9    2    1    1    1    1    1    2  º
º 10    2    1    1    1    1    1    2  º
º                                       º
º                                       º
º                                       º
ºEND OF SUBMENU                         º
ÈÍÍÍÍÍÍÍÍÍÍÍÍÍÍÍÍÍÍÍÍÍÍÍÍÍÍÍÍÍÍÍÍÍÍÍÍÍÍ¼

♀
ÉÍÍÍÍÍÍÍÍÍÍÍÍÍÍÍÍÍÍÍÍÍÍÍÍÍÍÍÍÍÍÍÍÍÍÍÍÍÍ»
º         NIC/TOD YEARLY PROGRAM        º
ºWEEK OF YEAR      1  2  3  4  5  6  7  8º
ºWEEKLY PROGRAM    1  1  1  1  1  1  1  1º
º                                       º
ºWEEK OF YEAR      9 10 11 12 13 14 15 16º
ºWEEKLY PROGRAM    1  1  1  1  1  1  1  1º
º                                       º
ºWEEK OF YEAR     17 18 19 20 21 22 23 24º
ºWEEKLY PROGRAM    1  1  1  1  1  1  1  1º
º                                       º
ºWEEK OF YEAR     25 26 27 28 29 30 31 32º
ºWEEKLY PROGRAM    1  1  1  1  1  1  1  1º
º                                       º
ºWEEK OF YEAR     33 34 35 36 37 38 39 40º
ºWEEKLY PROGRAM    1  1  1  1  1  1  1  1º
ºADDITIONAL SCREEN(S)                   º
ÈÍÍÍÍÍÍÍÍÍÍÍÍÍÍÍÍÍÍÍÍÍÍÍÍÍÍÍÍÍÍÍÍÍÍÍÍÍÍ¼

ÉÍÍÍÍÍÍÍÍÍÍÍÍÍÍÍÍÍÍÍÍÍÍÍÍÍÍÍÍÍÍÍÍÍÍÍÍÍÍ»
º         NIC/TOD YEARLY PROGRAM        º
º                                       º
ºWEEK OF YEAR     41 42 43 44 45 46 47 48º
ºWEEKLY PROGRAM    1  1  1  1  1  1  1  1º
º                                       º
ºWEEK OF YEAR              49 50 51 52 53º
ºWEEKLY PROGRAM             1  1  1  1  1º
º                                       º
º                                       º
º                                       º
```

HOLIDAY	NIC/TOD FLOAT/ FIXED	HOLIDAY PROGRAM MON/ MON	DOW/ DOM	WOM/ YEAR	PROG
1	FIXED	9	3	2002	2
2	FIXED	9	4	2002	2
3	FIXED	9	5	2002	2
4	FIXED	9	6	2002	2
5	FIXED	0	0	0	0
6	FIXED	0	0	0	0
7	FIXED	0	0	0	0
8	FIXED	0	0	0	0
9	FIXED	0	0	0	0
10	FIXED	0	0	0	0
11	FIXED	0	0	0	0
12	FIXED	0	0	0	0

ADDITIONAL SCREEN(S)

HOLIDAY	NIC/TOD FLOAT/ FIXED	HOLIDAY PROGRAM MON/ MON	DOW/ DOM	WOM/ YEAR	PROG
13	FIXED	0	0	0	0
14	FIXED	0	0	0	0
15	FIXED	0	0	0	0
16	FIXED	0	0	0	0
17	FIXED	0	0	0	0
18	FIXED	0	0	0	0
19	FIXED	0	0	0	0
20	FIXED	0	0	0	0
21	FIXED	0	0	0	0
22	FIXED	0	0	0	0
23	FIXED	0	0	0	0
24	FIXED	0	0	0	0

ADDITIONAL SCREEN(S)

HOLIDAY	NIC/TOD FLOAT/ FIXED	HOLIDAY PROGRAM MON/ MON	DOW/ DOM	WOM/ YEAR	PROG
25	FIXED	0	0	0	0
26	FIXED	0	0	0	0
27	FIXED	0	0	0	0
28	FIXED	0	0	0	0
29	FIXED	0	0	0	0
30	FIXED	0	0	0	0
31	FIXED	0	0	0	0
32	FIXED	0	0	0	0
33	FIXED	0	0	0	0
34	FIXED	0	0	0	0
35	FIXED	0	0	0	0
36	FIXED	0	0	0	0

END OF SUBMENU

```
ÈÍÍÍÍÍÍÍÍÍÍÍÍÍÍÍÍÍÍÍÍÍÍÍÍÍÍÍÍÍÍÍÍÍÍÍÍÍÍÍÍÍÍÍÍÍ¼

ÉÍÍÍÍÍÍÍÍÍÍÍÍÍÍÍÍÍÍÍÍÍÍÍÍÍÍÍÍÍÍÍÍÍÍÍÍÍÍÍÍÍÍÍÍÍ»
º        NIC PROGRAM STEP                               º
º                                                       º
ºSTEP  PGM TIME PATTERN OVERRIDE                        º
º  1    1  6:00   51       X                           º
º  2    1  9:00    0       X                           º
º  3    1 15:00   53       X                           º
º  4    1 19:00    0       X                           º
º  5    0  0:00    0       .                           º
º  6    0  0:00    0       .                           º
º  7    0  0:00    0       .                           º
º  8    0  0:00    0       .                           º
º  9    0  0:00    0       .                           º
º 10    0  0:00    0       .                           º
º 11    0  0:00    0       .                           º
º 12    0  0:00    0       .                           º
ºADDITIONAL SCREEN(S)                                   º
ÈÍÍÍÍÍÍÍÍÍÍÍÍÍÍÍÍÍÍÍÍÍÍÍÍÍÍÍÍÍÍÍÍÍÍÍÍÍÍÍÍÍÍÍÍÍ¼

♀

ÉÍÍÍÍÍÍÍÍÍÍÍÍÍÍÍÍÍÍÍÍÍÍÍÍÍÍÍÍÍÍÍÍÍÍÍÍÍÍÍÍÍÍÍÍÍ»
ºTOD PROGRAM STEP   1                                   º
º                                                       º
ºDAY PGM NUM....  2                                     º
ºSTEP BEGINS....  7:00                                  º
º                                                       º
ºFLASH.......... .   DIM ENABLE..... .                 º
ºRED REST....... .   ALT VEH EXTSN... .                º
ºSPARE 5........ .   DET LOG ENABLE.. .                º
ºSPARE 3........ .   SPARE 4........ .                 º
ºTYPE 0 DELAY EN. .   SPARE 2........ .                 º
ºDET DIAG PLAN... 0                                     º
º                                                       º
º                       A..B..C..D..E..F                º
ºALTERNATE SEQUENCE     .  .  .  .  .  .                º
º                                                       º
ºADDITIONAL SCREEN(S)                                   º
ÈÍÍÍÍÍÍÍÍÍÍÍÍÍÍÍÍÍÍÍÍÍÍÍÍÍÍÍÍÍÍÍÍÍÍÍÍÍÍÍÍÍÍÍÍÍ¼

ÉÍÍÍÍÍÍÍÍÍÍÍÍÍÍÍÍÍÍÍÍÍÍÍÍÍÍÍÍÍÍÍÍÍÍÍÍÍÍÍÍÍÍÍÍÍ»
º                                          1 1 1        º
ºPHASE..........  1 2 3 4 5 6 7 8 9 0 1 2              º
ºMAX2 ENABLE....  . . . . . . . . . . . .              º
ºMAX3 ENABLE....  . . . . . . . . . . . .              º
ºVEH RECALL.....  . . . . . . . . . . . .              º
ºVEH MAX RECALL.  . X . . . . . X . . . .              º
ºPED RECALL.....  . . . . . . . . . . . .              º
ºCOND SERV INH..  . . . . . . . . . . . .              º
ºPHASE OMIT.....  . . . . . . . . . . . .              º
ºSPECIAL FCTNS..  . . . . . . . . (1 - 8)              º
º                                                       º
º                                                       º
º                                                       º
º                                                       º
º                                                       º
ºADDITIONAL SCREEN(S)                                   º
ÈÍÍÍÍÍÍÍÍÍÍÍÍÍÍÍÍÍÍÍÍÍÍÍÍÍÍÍÍÍÍÍÍÍÍÍÍÍÍÍÍÍÍÍÍÍ¼

ÉÍÍÍÍÍÍÍÍÍÍÍÍÍÍÍÍÍÍÍÍÍÍÍÍÍÍÍÍÍÍÍÍÍÍÍÍÍÍÍÍÍÍÍÍÍ»
ºTOD PROGRAM STEP   2                                   º
º                                                       º
ºDAY PGM NUM....  2                                     º
```

```
ºSTEP BEGINS.... 16:00                                  º
º                                                       º
ºFLASH.......... .   DIM ENABLE..... . º
ºRED REST....... .   ALT VEH EXTSN... . º
ºSPARE 5........ .   DET LOG ENABLE.. . º
ºSPARE 3........ .   SPARE 4........ . º
ºTYPE 0 DELAY EN. .   SPARE 2........ . º
ºDET DIAG PLAN... 0                                     º
º                                                       º
º                         A..B..C..D..E..F º
ºALTERNATE SEQUENCE       .  .  .  .  .  . º
º                                                       º
ºADDITIONAL SCREEN(S)                                   º
ÈÍÍÍÍÍÍÍÍÍÍÍÍÍÍÍÍÍÍÍÍÍÍÍÍÍÍÍÍÍÍÍÍÍÍÍÍÍÍÍÍÍÍ¼
♀
ÉÍÍÍÍÍÍÍÍÍÍÍÍÍÍÍÍÍÍÍÍÍÍÍÍÍÍÍÍÍÍÍÍÍÍÍÍÍÍÍÍÍÍ»
º                                       1 1 1º
ºPHASE.........  1 2 3 4 5 6 7 8 9 0 1 2º
ºMAX2 ENABLE....  . . . . . . . . . . . .º
ºMAX3 ENABLE....  . . . . . . . . . . . .º
ºVEH RECALL.....  . . . . . . . . . . . .º
ºVEH MAX RECALL.  . . . . . . . . . . . .º
ºPED RECALL.....  . . . . . . . . . . . .º
ºCOND SERV INH..  . . . . . . . . . . . .º
ºPHASE OMIT.....  . . . . . . . . . . . .º
ºSPECIAL FCTNS..  . . . . . . . (1 - 8)º
º                                                       º
º                                                       º
º                                                       º
º                                                       º
º                                                       º
ºADDITIONAL SCREEN(S)                                   º
ÈÍÍÍÍÍÍÍÍÍÍÍÍÍÍÍÍÍÍÍÍÍÍÍÍÍÍÍÍÍÍÍÍÍÍÍÍÍÍÍÍÍÍ¼
♀
ÉÍÍÍÍÍÍÍÍÍÍÍÍÍÍÍÍÍÍÍÍÍÍÍÍÍÍÍÍÍÍÍÍÍÍÍÍÍÍÍÍÍÍ»
º*****************************************º
º*   ECONOLITE CONTROL PRODUCTS, INC.    *º
º*             ASC/2-2000                *º
º*          Copyright (C) 1992           *º
º*                                       *º
º* City of Ontario, T MffdM Engineering *º
º*  ASC/2-2M0MM Co figuratiMODMer m1.1   *º
º*                                       *º
º*   SOFTWARE ASSY              VERSION   *º
º*   BOOT            32783        1.25   *º
º*   MAIN PROGRAM    32787        1.59   *º
º*   HELP            32789        1.48   *º
º*   CONFIGURATION   32790       C8145   *º
º*                                       *º
º*                                       *º
º*****************************************º
ÈÍÍÍÍÍÍÍÍÍÍÍÍÍÍÍÍÍÍÍÍÍÍÍÍÍÍÍÍÍÍÍÍÍÍÍÍÍÍÍÍÍÍ¼
ÉÍÍÍÍÍÍÍÍÍÍÍÍÍÍÍÍÍÍÍÍÍÍÍÍÍÍÍÍÍÍÍÍÍÍÍÍÍÍÍÍÍÍ»
º          DETECTOR TYPE/TIMERS                   º
º                                 NO    LOG       º
ºDET TYPE LOCK  EXTEND DELAY RESET ENABLEº
º 1   0     .    0.0     0    .      .  º
º 2   1     .    0.0     5    .      .  º
º 3   1     .    0.0     2    .      .  º
º 4   0     .    0.0     0    .      .  º
º 5   0     .    0.0     0    .      .  º
º 6   0     .    0.0     0    .      .  º
```

```
º 7   0     .     0.0     0    .      .  º
º 8   0     .     0.0     0    .      .  º
º 9   0     .     0.0     0    .      .  º
º10   0     .     0.0     0    .      .  º
º11   0     .     0.0     0    .      .  º
º12   0     .     0.0     0    .      .  º
ºADDITIONAL SCREEN(S)                    º
ÈÍÍÍÍÍÍÍÍÍÍÍÍÍÍÍÍÍÍÍÍÍÍÍÍÍÍÍÍÍÍÍÍÍÍÍÍÍÍ¼

ÉÍÍÍÍÍÍÍÍÍÍÍÍÍÍÍÍÍÍÍÍÍÍÍÍÍÍÍÍÍÍÍÍÍÍÍÍÍÍ»
º          DETECTOR TYPE/TIMERS          º
º                                NO    LOG   º
ºDET TYPE LOCK  EXTEND DELAY RESET ENABLEº
º13   0     .     0.0     0    .      .  º
º14   0     .     0.0     0    .      .  º
º15   0     .     0.0     0    .      .  º
º16   0     .     0.0     0    .      .  º
º17   0     .     0.0     0    .      .  º
º18   0     .     0.0     0    .      .  º
º19   0     .     0.0     0    .      .  º
º20   0     .     0.0     0    .      .  º
º21   0     .     0.0     0    .      .  º
º22   0     .     0.0     0    .      .  º
º23   0     .     0.0     0    .      .  º
º24   0     .     0.0     0    .      .  º
ºADDITIONAL SCREEN(S)                    º
ÈÍÍÍÍÍÍÍÍÍÍÍÍÍÍÍÍÍÍÍÍÍÍÍÍÍÍÍÍÍÍÍÍÍÍÍÍÍÍ¼

ÉÍÍÍÍÍÍÍÍÍÍÍÍÍÍÍÍÍÍÍÍÍÍÍÍÍÍÍÍÍÍÍÍÍÍÍÍÍÍ»
º          DETECTOR TYPE/TIMERS          º
º                                NO    LOG   º
ºDET TYPE LOCK  EXTEND DELAY RESET ENABLEº
º21   0     .     0.0     0    .      .  º
º22   0     .     0.0     0    .      .  º
º23   0     .     0.0     0    .      .  º
º24   0     .     0.0     0    .      .  º
º25   0     .     0.0     0    .      .  º
º26   0     .     0.0     0    .      .  º
º27   0     .     0.0     0    .      .  º
º28   0     .     0.0     0    .      .  º
º29   0     .     0.0     0    .      .  º
º30   0     .     0.0     0    .      .  º
º31   0     .     0.0     0    .      .  º
º32   0     .     0.0     0    .      .  º
ºEND OF SUBMENU                          º
ÈÍÍÍÍÍÍÍÍÍÍÍÍÍÍÍÍÍÍÍÍÍÍÍÍÍÍÍÍÍÍÍÍÍÍÍÍÍÍ¼

ÉÍÍÍÍÍÍÍÍÍÍÍÍÍÍÍÍÍÍÍÍÍÍÍÍÍÍÍÍÍÍÍÍÍÍÍÍÍÍ»
º      DETECTOR PHASE ASSIGNMENT         º
º              PHASE ASSIGNMENT: 1 1 1   º
ºDETECTOR      1 2 3 4 5 6 7 8 9 0 1 2   º
º    1         . . . . . . . . . . . .   º
º    2         . X . . . . . . . . . .   º
º    3         . . X . . . . . . . . .   º
º    4         . . . X . . . . . . . .   º
º    5         . . . . . . . . . . . .   º
º    6         . . . . . . . . . . . .   º
º    7         . . . . . . . . . . . .   º
º    8         . . . . . . . X . . . .   º
º    9         . . . . . . . . . . . .   º
º   10         . . . . . . . . . . . .   º
º   11         . . . . . . . . . . . .   º
º   12         . . . X . . . . . . . .   º
```

```
ºADDITIONAL SCREEN(S)                                          º
ÈÍÍÍÍÍÍÍÍÍÍÍÍÍÍÍÍÍÍÍÍÍÍÍÍÍÍÍÍÍÍÍÍÍÍÍÍÍÍÍÍÍÍÍÍÍÍÍÍÍÍÍÍÍÍ¼

ÉÍÍÍÍÍÍÍÍÍÍÍÍÍÍÍÍÍÍÍÍÍÍÍÍÍÍÍÍÍÍÍÍÍÍÍÍÍÍÍÍÍÍÍÍÍÍÍÍÍÍÍÍÍÍ»
º      DETECTOR PHASE ASSIGNMENT                               º
º               PHASE ASSIGNMENT: 1 1 1                        º
ºDETECTOR       1 2 3 4 5 6 7 8 9 0 1 2                        º
º   13          . . . . . . . . . . . .                        º
º   14          . . . . . . . . . . . .                        º
º   15          . . . . . . X . . . . .                        º
º   16          . . . . . . . X . . . .                        º
º   17          . . . . . . . . . . . .                        º
º   18          . X . . . . . . . . . .                        º
º   19          . . . . . . . . . . . .                        º
º   20          . . . X . . . . . . . .                        º
º   21          . X . . . . . . . . . .                        º
º   22          . . . . . . . . . . . .                        º
º   23          . . . . . . X . . . . .                        º
º   24          . . . . . . . X . . . .                        º
ºADDITIONAL SCREEN(S)                                          º
ÈÍÍÍÍÍÍÍÍÍÍÍÍÍÍÍÍÍÍÍÍÍÍÍÍÍÍÍÍÍÍÍÍÍÍÍÍÍÍÍÍÍÍÍÍÍÍÍÍÍÍÍÍÍÍ¼

♀

ÉÍÍÍÍÍÍÍÍÍÍÍÍÍÍÍÍÍÍÍÍÍÍÍÍÍÍÍÍÍÍÍÍÍÍÍÍÍÍÍÍÍÍÍÍÍÍÍÍÍÍÍÍÍÍ»
ºPED AND SYSTEM DETECTOR LOCAL ASSIGNMENTº
º                                                              º
ºDETECTOR LOG INTERVAL.........  0 MINUTESº
º----------------------------------------º
ºLOCAL          - PHASE PED DETECTOR -     º
ºPED DET         1   2   3   4   5   6     º
ºNUMBER..        1   2   3   4   5   6     º
º                7   8   9  10  11  12     º
ºNUMBER..        7   8   9  10  11  12     º
º----------------------------------------º
ºLOCAL      -- LOCAL SYSTEM DET NUMBER ---º
ºDETECTOR   1   2   3   4   5   6   7   8º
ºNUMBER..   0  10   0  12   0   0   0  16º
º           9  10  11  12  13  14  15  16º
ºNUMBER..   0   0   0   0   0   0   0   0º
ºEND OF SUBMENU                                                º
ÈÍÍÍÍÍÍÍÍÍÍÍÍÍÍÍÍÍÍÍÍÍÍÍÍÍÍÍÍÍÍÍÍÍÍÍÍÍÍÍÍÍÍÍÍÍÍÍÍÍÍÍÍÍÍ¼

ÉÍÍÍÍÍÍÍÍÍÍÍÍÍÍÍÍÍÍÍÍÍÍÍÍÍÍÍÍÍÍÍÍÍÍÍÍÍÍÍÍÍÍÍÍÍÍÍÍÍÍÍÍÍÍ»
º            SPEED DETECTORS                                   º
º                                                              º
º  SPEED DET NUMBER:  ...1....2....3....4º
ºONE DETECTOR SPEED:                                           º
º LOCAL DET NUMBER..     0    0    0    0º
º VEHICLE LENGTH....     0    0    0    0º
º LOOP LENGTH.......     0    0    0    0º
º                                                              º
ºTWO DETECTOR SPEED:                                           º
º LOCAL DET NUMBER..     0    0    0    0º
º SPEED TRAP LENGTH.     0    0    0    0º
º                                                              º
ºENABLE LOG.........     .    .    .    .º
º                                                              º
ºUNITS:  INCHES                                                º
ºADDITIONAL PAGE(S)                              MORE->º
ÈÍÍÍÍÍÍÍÍÍÍÍÍÍÍÍÍÍÍÍÍÍÍÍÍÍÍÍÍÍÍÍÍÍÍÍÍÍÍÍÍÍÍÍÍÍÍÍÍÍÍÍÍÍÍ¼

ÉÍÍÍÍÍÍÍÍÍÍÍÍÍÍÍÍÍÍÍÍÍÍÍÍÍÍÍÍÍÍÍÍÍÍÍÍÍÍÍÍÍÍÍÍÍÍÍÍÍÍÍÍÍÍ»
º            SPEED DETECTORS                                   º
º                                                              º
```

```
º  SPEED DET NUMBER:  ...5....6....7....8º
ºONE DETECTOR SPEED:                      º
º LOCAL DET NUMBER..     0    0    0    0º
º VEHICLE LENGTH....     0    0    0    0º
º LOOP LENGTH.......     0    0    0    0º
º                                         º
ºTWO DETECTOR SPEED:                      º
º LOCAL DET NUMBER..     0    0    0    0º
º SPEED TRAP LENGTH.     0    0    0    0º
º                                         º
ºENABLE LOG.........     .    .    .    .º
º                                         º
ºUNITS:  INCHES                           º
ºADDITIONAL PAGE(S)              <-MORE   º
ÈÍÍÍÍÍÍÍÍÍÍÍÍÍÍÍÍÍÍÍÍÍÍÍÍÍÍÍÍÍÍÍÍÍÍÍÍÍÍ¼

ÉÍÍÍÍÍÍÍÍÍÍÍÍÍÍÍÍÍÍÍÍÍÍÍÍÍÍÍÍÍÍÍÍÍÍÍÍÍÍ»
º            SPEED DETECTORS              º
º                                         º
º  SPEED DET NUMBER:  ...9...10...11...12º
ºONE DETECTOR SPEED:                      º
º LOCAL DET NUMBER..     0    0    0    0º
º VEHICLE LENGTH....     0    0    0    0º
º LOOP LENGTH.......     0    0    0    0º
º                                         º
ºTWO DETECTOR SPEED:                      º
º LOCAL DET NUMBER..     0    0    0    0º
º SPEED TRAP LENGTH.     0    0    0    0º
º                                         º
ºENABLE LOG.........     .    .    .    .º
º                                         º
º                                         º
ºEND OF SUBMENU                  MORE->   º
ÈÍÍÍÍÍÍÍÍÍÍÍÍÍÍÍÍÍÍÍÍÍÍÍÍÍÍÍÍÍÍÍÍÍÍÍÍÍÍ¼

ÉÍÍÍÍÍÍÍÍÍÍÍÍÍÍÍÍÍÍÍÍÍÍÍÍÍÍÍÍÍÍÍÍÍÍÍÍÍÍ»
º            SPEED DETECTORS              º
º                                         º
º  SPEED DET NUMBER:  ..13...14...15...16º
ºONE DETECTOR SPEED:                      º
º LOCAL DET NUMBER..     0    0    0    0º
º VEHICLE LENGTH....     0    0    0    0º
º LOOP LENGTH.......     0    0    0    0º
º                                         º
ºTWO DETECTOR SPEED:                      º
º LOCAL DET NUMBER..     0    0    0    0º
º SPEED TRAP LENGTH.     0    0    0    0º
º                                         º
ºENABLE LOG.........     .    .    .    .º
º                                         º
º                                         º
ºEND OF SUBMENU                  <-MORE   º
ÈÍÍÍÍÍÍÍÍÍÍÍÍÍÍÍÍÍÍÍÍÍÍÍÍÍÍÍÍÍÍÍÍÍÍÍÍÍÍ¼

ÉÍÍÍÍÍÍÍÍÍÍÍÍÍÍÍÍÍÍÍÍÍÍÍÍÍÍÍÍÍÍÍÍÍÍÍÍÍÍ»
º      PED DETECTOR DIAGNOSTIC PLAN       º
º                                         º
ºPLAN DET NUMBER  1  2  3  4  5  6  7  8 º
º  1  DIAG NUM..  0  0  0  0  0  0  0  0 º
º     SCALING...  1  1  1  1  1  1  1  1 º
º  2  DIAG NUM..  0  0  0  0  0  0  0  0 º
º     SCALING...  1  1  1  1  1  1  1  1 º
º  3  DIAG NUM..  0  0  0  0  0  0  0  0 º
```

```
º     SCALING...  1  1  1  1  1  1  1  1 º
º  4  DIAG NUM..  0  0  0  0  0  0  0  0 º
º     SCALING...  1  1  1  1  1  1  1  1 º
º  5  DIAG NUM..  0  0  0  0  0  0  0  0 º
º     SCALING...  1  1  1  1  1  1  1  1 º
º  6  DIAG NUM..  0  0  0  0  0  0  0  0 º
º     SCALING...  1  1  1  1  1  1  1  1 º
ºADDITIONAL SCREEN(S)              MORE->º
ÈÍÍÍÍÍÍÍÍÍÍÍÍÍÍÍÍÍÍÍÍÍÍÍÍÍÍÍÍÍÍÍÍÍÍÍÍÍÍÍÍÍÍ¼

ÉÍÍÍÍÍÍÍÍÍÍÍÍÍÍÍÍÍÍÍÍÍÍÍÍÍÍÍÍÍÍÍÍÍÍÍÍÍÍÍÍÍÍ»
º      PED DETECTOR DIAGNOSTIC PLAN      º
º                                         º
ºPLAN DET NUMBER  1  2  3  4  5  6  7  8 º
º  7  DIAG NUM..  0  0  0  0  0  0  0  0 º
º     SCALING...  1  1  1  1  1  1  1  1 º
º  8  DIAG NUM..  0  0  0  0  0  0  0  0 º
º     SCALING...  1  1  1  1  1  1  1  1 º
º                                         º
º                                         º
º                                         º
º                                         º
º                                         º
º                                         º
º                                         º
º                                         º
ºEND OF SUBMENU                    MORE->º
ÈÍÍÍÍÍÍÍÍÍÍÍÍÍÍÍÍÍÍÍÍÍÍÍÍÍÍÍÍÍÍÍÍÍÍÍÍÍÍÍÍÍÍ¼

ÉÍÍÍÍÍÍÍÍÍÍÍÍÍÍÍÍÍÍÍÍÍÍÍÍÍÍÍÍÍÍÍÍÍÍÍÍÍÍÍÍÍÍ»
º      PED DETECTOR DIAGNOSTIC PLAN      º
º                                         º
ºPLAN DET NUMBER  9 10 11 12              º
º  1  DIAG NUM..  0  0  0  0              º
º     SCALING...  1  1  1  1              º
º  2  DIAG NUM..  0  0  0  0              º
º     SCALING...  1  1  1  1              º
º  3  DIAG NUM..  0  0  0  0              º
º     SCALING...  1  1  1  1              º
º  4  DIAG NUM..  0  0  0  0              º
º     SCALING...  1  1  1  1              º
º  5  DIAG NUM..  0  0  0  0              º
º     SCALING...  1  1  1  1              º
º  6  DIAG NUM..  0  0  0  0              º
º     SCALING...  1  1  1  1              º
ºADDITIONAL SCREEN(S)           <-MORE    º
ÈÍÍÍÍÍÍÍÍÍÍÍÍÍÍÍÍÍÍÍÍÍÍÍÍÍÍÍÍÍÍÍÍÍÍÍÍÍÍÍÍÍÍ¼

ÉÍÍÍÍÍÍÍÍÍÍÍÍÍÍÍÍÍÍÍÍÍÍÍÍÍÍÍÍÍÍÍÍÍÍÍÍÍÍÍÍÍÍ»
º      PED DETECTOR DIAGNOSTIC PLAN      º
º                                         º
ºPLAN DET NUMBER  9 10 11 12              º
º  7  DIAG NUM..  0  0  0  0              º
º     SCALING...  1  1  1  1              º
º  8  DIAG NUM..  0  0  0  0              º
º     SCALING...  1  1  1  1              º
º                                         º
º                                         º
º                                         º
º                                         º
º                                         º
º                                         º
º                                         º
```

```
º                                                                    º
ºEND OF SUBMENU                                <-MORE  º
ÈÍÍÍÍÍÍÍÍÍÍÍÍÍÍÍÍÍÍÍÍÍÍÍÍÍÍÍÍÍÍÍÍÍÍÍÍÍÍÍÍÍÍÍÍÍÍÍÍ¼
♀

ÉÍÍÍÍÍÍÍÍÍÍÍÍÍÍÍÍÍÍÍÍÍÍÍÍÍÍÍÍÍÍÍÍÍÍÍÍÍÍÍÍÍÍÍÍÍÍÍÍ»
º      DETECTOR DIAGNOSTIC INTERVAL                                  º
º                                                                    º
ºDIAGNOSTIC     NO       MAX     ERRATIC                             º
º  NUMBER    ACTIVITY  PRESENCE  COUNTS                              º
º    1          0         0         0                               º
º    2          0         0         0                               º
º    3          0         0         0                               º
º    4          0         0         0                               º
º    5          0         0         0                               º
º    6          0         0         0                               º
º    7          0         0         0                               º
º    8          0         0         0                               º
º    9          0         0         0                               º
º   10          0         0         0                               º
º   11          0         0         0                               º
ºADDITIONAL SCREEN(S)                                                º
ÈÍÍÍÍÍÍÍÍÍÍÍÍÍÍÍÍÍÍÍÍÍÍÍÍÍÍÍÍÍÍÍÍÍÍÍÍÍÍÍÍÍÍÍÍÍÍÍÍ¼

ÉÍÍÍÍÍÍÍÍÍÍÍÍÍÍÍÍÍÍÍÍÍÍÍÍÍÍÍÍÍÍÍÍÍÍÍÍÍÍÍÍÍÍÍÍÍÍÍÍ»
º      DETECTOR DIAGNOSTIC INTERVAL                                  º
º                                                                    º
ºDIAGNOSTIC     NO       MAX     ERRATIC                             º
º  NUMBER    ACTIVITY  PRESENCE  COUNTS                              º
º   12          0         0         0                               º
º   13          0         0         0                               º
º   14          0         0         0                               º
º   15          0         0         0                               º
º   16          0         0         0                               º
º   17          0         0         0                               º
º   18          0         0         0                               º
º   19          0         0         0                               º
º   20          0         0         0                               º
º   21          0         0         0                               º
º   22          0         0         0                               º
ºADDITIONAL SCREEN(S)                                                º
ÈÍÍÍÍÍÍÍÍÍÍÍÍÍÍÍÍÍÍÍÍÍÍÍÍÍÍÍÍÍÍÍÍÍÍÍÍÍÍÍÍÍÍÍÍÍÍÍÍ¼

ÉÍÍÍÍÍÍÍÍÍÍÍÍÍÍÍÍÍÍÍÍÍÍÍÍÍÍÍÍÍÍÍÍÍÍÍÍÍÍÍÍÍÍÍÍÍÍÍÍ»
º      DETECTOR DIAGNOSTIC INTERVAL                                  º
º                                                                    º
ºDIAGNOSTIC     NO       MAX     ERRATIC                             º
º  NUMBER    ACTIVITY  PRESENCE  COUNTS                              º
º   22          0         0         0                               º
º   23          0         0         0                               º
º   24          0         0         0                               º
º   25          0         0         0                               º
º   26          0         0         0                               º
º   27          0         0         0                               º
º   28          0         0         0                               º
º   29          0         0         0                               º
º   30          0         0         0                               º
º   31          0         0         0                               º
º   32          0         0         0                               º
ºEND OF SUBMENU                                                      º
ÈÍÍÍÍÍÍÍÍÍÍÍÍÍÍÍÍÍÍÍÍÍÍÍÍÍÍÍÍÍÍÍÍÍÍÍÍÍÍÍÍÍÍÍÍÍÍÍÍ¼
♀
```

Milliken timing 082017 - Milliken @ 7th 111522

Configuration Phase Sequence Page 1

Phase Ring (MM)1-1-1

Phase															
1	2	3	4	5	6	7	8	9	10	11	12	13	14	15	16
1	1	1	1	2	2	2	2	1	1	2	2	1	1	2	2

Hardware Alternate Sequence Enable: No

Phase Ring Sequence

Sequence	Ring	Phase															
		1	2	3	4	5	6	7	8	9	10	11	12	13	14	15	16
	Barrier Mode	B		B		B		B		B							
1	1	1	2	3	4	9	10	13	14	0	0	0	0	0	0	0	0
1	2	5	6	7	8	11	12	15	16	0	0	0	0	0	0	0	0
2	1	2	1	3	4	10	9	13	14	0	0	0	0	0	0	0	0
2	2	5	6	7	8	11	12	15	16	0	0	0	0	0	0	0	0
3	1	1	2	4	3	9	10	14	13	0	0	0	0	0	0	0	0
3	2	5	6	7	8	11	12	15	16	0	0	0	0	0	0	0	0
4	1	2	1	4	3	10	9	14	13	0	0	0	0	0	0	0	0
4	2	5	6	7	8	11	12	15	16	0	0	0	0	0	0	0	0
5	1	1	2	3	4	9	10	13	14	0	0	0	0	0	0	0	0
5	2	6	5	7	8	12	11	15	16	0	0	0	0	0	0	0	0
6	1	2	1	3	4	10	9	13	14	0	0	0	0	0	0	0	0
6	2	6	5	7	8	12	11	15	16	0	0	0	0	0	0	0	0
7	1	1	2	4	3	9	10	14	13	0	0	0	0	0	0	0	0
7	2	6	5	7	8	12	11	15	16	0	0	0	0	0	0	0	0
8	1	2	1	4	3	10	9	14	13	0	0	0	0	0	0	0	0
8	2	6	5	7	8	12	11	15	16	0	0	0	0	0	0	0	0
9	1	1	2	3	4	9	10	13	14	0	0	0	0	0	0	0	0
9	2	5	6	8	7	11	12	16	15	0	0	0	0	0	0	0	0
10	1	2	1	3	4	10	9	13	14	0	0	0	0	0	0	0	0
10	2	5	6	8	7	11	12	16	15	0	0	0	0	0	0	0	0
11	1	1	2	4	3	9	10	14	13	0	0	0	0	0	0	0	0
11	2	5	6	8	7	11	12	16	15	0	0	0	0	0	0	0	0
12	1	2	1	4	3	10	9	14	13	0	0	0	0	0	0	0	0
12	2	5	6	8	7	11	12	16	15	0	0	0	0	0	0	0	0
13	1	1	2	3	4	9	10	13	14	0	0	0	0	0	0	0	0
13	2	6	5	8	7	12	11	16	15	0	0	0	0	0	0	0	0
14	1	2	1	3	4	10	9	13	14	0	0	0	0	0	0	0	0
14	2	6	5	8	7	12	11	16	15	0	0	0	0	0	0	0	0
15	1	1	2	4	3	9	10	14	13	0	0	0	0	0	0	0	0
15	2	6	5	8	7	12	11	16	15	0	0	0	0	0	0	0	0
16	1	2	1	4	3	10	9	14	13	0	0	0	0	0	0	0	0
16	2	6	5	8	7	12	11	16	15	0	0	0	0	0	0	0	0

Phase Compatibility (MM)1-1-2

Phase 1	Phase 2
1	5
1	6
2	5
2	6
3	7
3	8
4	7
4	8
9	11
9	12
10	11
10	12
13	15
13	16
14	15
14	16

Phase Direction Descriptions

Phase Description

Overlap Direction Descriptions

Overlap Description

Administration (MM)1-7-1
Enable CRC Check: No
CRC: 0000
Request Download Program Data: No
Enable Automatic Backup to Datakey: No

Milliken timing 082017 - Milliken @ 7th 111522

Configuration Phase Sequence Page 2

Phases In Use	In Use(MM)1-2	Exclusive Ped(MM)1-2	Backup Prevent(MM)1-1-3	Simultaneous Gap(MM)1-1-4	Disable(MM)1-1-4
		Phase	Phase Timing Phase Backup	Phase Must Gap with Phase	Phase
1					
2					
4					
5					
6					
8					

Load Switch Assignments (MMU Channel) (MM)1-3

Phase	Overlap	Type	Dim R	Y	G	D	Auto R	Y	Flash Together
1	1	V				+	Yes		
2	2	V				+	Yes		Yes
3	3	O				+	Yes		
4	4	V				+	Yes		Yes
5	5	V				-	Yes		
6	6	V				-	Yes		Yes
7	7	O				-	Yes		
8	8	V				-	Yes		Yes
9	2	P				+			
10	4	P				+			
11	6	P				-			
12	8	P				-			
13	0					-			
14	0					-			
15	0					-			
16	0					-			

Milliken timing 082017 - Milliken @ 7th 111522

Configuration Port 1 (SDLC)

SDLC Options (MM)1-4-1

Bus Interface Terminal/Facilities

BIU	Term and Facility Enable	Detector Rack Enable
1	No	No
2	No	No
3	No	No
4	No	No
5	No	No
6	No	No
7	No	No
8	No	No

Enable TS2/MMU Type Cabinet: No
Enable MMU Extended Status: No
Enable SDLC Stop Time: No
Enable 3 Critical RFE's Lockup: No
MMU To CU SDLC External Start: Enabled
Diagonstics (Test Fixture) Enable: No

Secondary To Secondary Addressing

ID	Term and Facility Enable	Detector Rack Enable
1	No	No
2	No	No
3	No	No
4	No	No
5	No	No
6	No	No
7	No	No
8	No	No

Secondary To Secondary Addressing MMU: No
Secondary To Secondary Addressing Diagonstics: No

MMU Program (MM)1-4-2

Channel Can Serve with Channel

Channel 1	Channel 2

Color Check Enable (MM)1-4-3
Enable Color Check: Yes

Color Check Enable

MMU Channel	Green	Yellow	Red
1	Yes	Yes	Yes
2	Yes	Yes	Yes
4	Yes	Yes	Yes
5	Yes	Yes	Yes
6	Yes	Yes	Yes
8	Yes	Yes	Yes
9	Yes	No	Yes
10	Yes	No	Yes
11	Yes	No	Yes
12	Yes	No	Yes

Milliken timing 082017 - Milliken @ 7th 111522

Configuration Communications

Ethernet Port Configuration (MM)1-5-1

Controller IP:	10.70.10.51
Subnet Mask:	255.255.255.0
Default Gateway IP:	10.70.10.1
Server IP:	10.70.10.1

NTCIP Parameters (MM)1-5-5

Backup Time:	0
UDP Port:	501
Ethernet Priority:	1
Port 2 Priority:	4
Port 3A Priority:	2
Port 3B Priority:	3

Note for 2070: Port 2 is C50S, Port 3A is C21S, and Port 3B is C22S

Port Configuration (MM)1-5-2 to 1-5-4

Port	Protocol	Enable	Data Rate	Data Parity Stop	Modem Setup String	User String	Comm Port Address	System Detector 9-1	Telemetry Response Delay	Duplex Half/Full	Flow Control	AB3418 NTCIP Group Address	AB3418 NTCIP Single Flag Enable	RTS to CTS Delay	RTS Turn Off Delay	Droupout Time	Early RTS	FSK Hardware
2	NTCIP	No	9600	8 N 1	None		1	0	0.0	Full	Yes	0	No	0.0	0.0	10	No	Yes
3A	NTCIP	Yes	9600	8 N 1	None		1	0	0.1	Full	Yes	0	No	0.0	0.0	10	No	Yes
3B	ECPIP	No	1200	8 0 1	None		2	0	0.1	Full	Yes	0	No	3.0	2.0	10	No	Yes

ECPIP Parameters (MM)1-5-6

Expanded System Detector Address: 0

Local System Detector

Local System Detector	Number

Milliken timing 082017 - Milliken @ 7th 111522

Configuration Logging/Display

Enable Event Logs (MM)1-6-1		**Alarm Logs (MM)1-6-1**	**Display Options (MM)1-7-2**
Critical RFE's:	Yes	Enabled: 1 15 16	Key Click Enable: Yes
3 Critical RFE's in 24 Hours:	Yes		Backlight Enable: Yes
MMU Flash Faults:	Yes		
Local Flash Faults:	Yes		
Non-Critical RFE's (Det/Test):	Yes		
Detector Errors:	Yes		
Coordination Errors:	Yes		
Controller Download:	Yes		
Preempt:	Yes		
TSP:	Yes		
Power On/Off:	Yes		
Low Battery:	Yes		
Access:	Yes		
Data Change:	Yes		

Milliken timing 082017 - Milliken @ 7th 111522

Logic Processor Page 1

Statement Control (MM)1-8-1

LP Statement Control

Milliken timing 082017 - Milliken @ 7th 111522

Logic Processor Page 2

Logic Statements (MM)1-8-2

Milliken timing 082017 - Milliken @ 7th 111522

Controller Timing Plan (MM)2-1

Plan 1

Phase	1	2	3	4	5	6	7	8	9	10	11	12	13	14	15	16
Min Green	5	5	0	5	5	5	0	5	5	5	5	5	5	5	5	5
BK Min Green	0	0	0	0	0	0	0	0	0	0	0	0	0	0	0	0
CS Min Green	0	0	0	0	0	0	0	0	0	0	0	0	0	0	0	0
Delay Green	0	0	0	0	0	0	0	0	0	0	0	0	0	0	0	0
Walk	0	10	0	10	0	10	0	10	0	10	0	10	0	10	0	10
Walk 2	0	0	0	0	0	0	0	0	0	0	0	0	0	0	0	0
Walk Max	0	0	0	0	0	0	0	0	0	0	0	0	0	0	0	0
Ped Clear	0	10	0	19	0	10	0	19	0	16	0	16	0	16	0	16
Ped Clear 2	0	0	0	0	0	0	0	0	0	0	0	0	0	0	0	0
Ped Clear Max	0	0	0	0	0	0	0	0	0	0	0	0	0	0	0	0
Ped CO	0	0	0	0	0	0	0	0	0	0	0	0	0	0	0	0
Vehicle Ext	2.0	2.0	2.0	2.0	2.0	2.0	2.0	2.0	5.0	5.0	5.0	5.0	5.0	5.0	5.0	5.0
Vehicle Ext 2	0.0	0.0	0.0	0.0	0.0	0.0	0.0	0.0	0.0	0.0	0.0	0.0	0.0	0.0	0.0	0.0
Max 1	25	45	15	25	25	45	15	25	35	35	35	35	35	35	35	35
Max 2	0	0	0	0	0	0	0	0	40	40	40	40	40	40	40	40
Max 3	0	0	0	0	0	0	0	0	0	0	0	0	0	0	0	0
DYM Max	0	0	0	0	0	0	0	0	0	0	0	0	0	0	0	0
DYM Stp	0.0	0.0	0.0	0.0	0.0	0.0	0.0	0.0	0.0	0.0	0.0	0.0	0.0	0.0	0.0	0.0
Yellow	3.0	4.9	3.0	3.6	3.0	4.9	3.0	3.6	3.0	3.0	3.0	3.0	3.0	3.0	3.0	3.0
Red Clear	1.0	1.1	1.0	2.6	1.0	1.1	1.0	2.6	1.0	1.0	1.0	1.0	1.0	1.0	1.0	1.0
Red Max	0.0	0.0	0.0	0.0	0.0	0.0	0.0	0.0	0.0	0.0	0.0	0.0	0.0	0.0	0.0	0.0
Red Revert	2.0	2.0	2.0	2.0	2.0	2.0	2.0	2.0	2.0	2.0	2.0	2.0	2.0	2.0	2.0	2.0
ACT B4	0	0	0	0	0	0	0	0	0	0	0	0	0	0	0	0
SEC/ACT	0.0	0.0	0.0	0.0	0.0	0.0	0.0	0.0	0.0	0.0	0.0	0.0	0.0	0.0	0.0	0.0
Max Int	0	0	0	0	0	0	0	0	0	0	0	0	0	0	0	0
Time B4	0	0	0	0	0	0	0	0	0	0	0	0	0	0	0	0
Cars Wt	0	0	0	0	0	0	0	0	0	0	0	0	0	0	0	0
STPT Duc	0.0	0.0	0.0	0.0	0.0	0.0	0.0	0.0	0.0	0.0	0.0	0.0	0.0	0.0	0.0	0.0
Time To Reduce	0	0	0	0	0	0	0	0	0	0	0	0	0	0	0	0
Min Gap	0.0	0.0	0.0	0.0	0.0	0.0	0.0	0.0	0.0	0.0	0.0	0.0	0.0	0.0	0.0	0.0

Plan 2

Phase	1	2	3	4	5	6	7	8	9	10	11	12	13	14	15	16
Min Green	5	5	5	5	5	5	5	5	5	5	5	5	5	5	5	5
BK Min Green	0	0	0	0	0	0	0	0	0	0	0	0	0	0	0	0
CS Min Green	0	0	0	0	0	0	0	0	0	0	0	0	0	0	0	0
Delay Green	0	0	0	0	0	0	0	0	0	0	0	0	0	0	0	0
Walk	0	10	0	10	0	10	0	10	0	10	0	10	0	10	0	10
Walk 2	0	0	0	0	0	0	0	0	0	0	0	0	0	0	0	0
Walk Max	0	0	0	0	0	0	0	0	0	0	0	0	0	0	0	0
Ped Clear	0	16	0	16	0	16	0	16	0	16	0	16	0	16	0	16
Ped Clear 2	0	0	0	0	0	0	0	0	0	0	0	0	0	0	0	0
Ped Clear Max	0	0	0	0	0	0	0	0	0	0	0	0	0	0	0	0
Ped CO	0	0	0	0	0	0	0	0	0	0	0	0	0	0	0	0
Vehicle Ext	5.0	5.0	5.0	5.0	5.0	5.0	5.0	5.0	5.0	5.0	5.0	5.0	5.0	5.0	5.0	5.0
Vehicle Ext 2	0.0	0.0	0.0	0.0	0.0	0.0	0.0	0.0	0.0	0.0	0.0	0.0	0.0	0.0	0.0	0.0
Max 1	35	35	35	35	35	35	35	35	35	35	35	35	35	35	35	35
Max 2	40	40	40	40	40	40	40	40	40	40	40	40	40	40	40	40
Max 3	0	0	0	0	0	0	0	0	0	0	0	0	0	0	0	0
DYM Max	0	0	0	0	0	0	0	0	0	0	0	0	0	0	0	0
DYM Stp	0.0	0.0	0.0	0.0	0.0	0.0	0.0	0.0	0.0	0.0	0.0	0.0	0.0	0.0	0.0	0.0
Yellow	3.0	3.0	3.0	3.0	3.0	3.0	3.0	3.0	3.0	3.0	3.0	3.0	3.0	3.0	3.0	3.0
Red Clear	1.0	1.0	1.0	1.0	1.0	1.0	1.0	1.0	1.0	1.0	1.0	1.0	1.0	1.0	1.0	1.0
Red Max	0.0	0.0	0.0	0.0	0.0	0.0	0.0	0.0	0.0	0.0	0.0	0.0	0.0	0.0	0.0	0.0
Red Revert	2.0	2.0	2.0	2.0	2.0	2.0	2.0	2.0	2.0	2.0	2.0	2.0	2.0	2.0	2.0	2.0
ACT B4	0	0	0	0	0	0	0	0	0	0	0	0	0	0	0	0
SEC/ACT	0.0	0.0	0.0	0.0	0.0	0.0	0.0	0.0	0.0	0.0	0.0	0.0	0.0	0.0	0.0	0.0
Max Int	0	0	0	0	0	0	0	0	0	0	0	0	0	0	0	0
Time B4	0	0	0	0	0	0	0	0	0	0	0	0	0	0	0	0
Cars Wt	0	0	0	0	0	0	0	0	0	0	0	0	0	0	0	0
STPT Duc	0.0	0.0	0.0	0.0	0.0	0.0	0.0	0.0	0.0	0.0	0.0	0.0	0.0	0.0	0.0	0.0
Time To Reduce	0	0	0	0	0	0	0	0	0	0	0	0	0	0	0	0
Min Gap	0.0	0.0	0.0	0.0	0.0	0.0	0.0	0.0	0.0	0.0	0.0	0.0	0.0	0.0	0.0	0.0

Plan 3

Phase	1	2	3	4	5	6	7	8	9	10	11	12	13	14	15	16
Min Green	5	5	5	5	5	5	5	5	5	5	5	5	5	5	5	5
BK Min Green	0	0	0	0	0	0	0	0	0	0	0	0	0	0	0	0
CS Min Green	0	0	0	0	0	0	0	0	0	0	0	0	0	0	0	0
Delay Green	0	0	0	0	0	0	0	0	0	0	0	0	0	0	0	0
Walk	0	10	0	10	0	10	0	10	0	10	0	10	0	10	0	10
Walk 2	0	0	0	0	0	0	0	0	0	0	0	0	0	0	0	0
Walk Max	0	0	0	0	0	0	0	0	0	0	0	0	0	0	0	0
Ped Clear	0	16	0	16	0	16	0	16	0	16	0	16	0	16	0	16
Ped Clear 2	0	0	0	0	0	0	0	0	0	0	0	0	0	0	0	0
Ped Clear Max	0	0	0	0	0	0	0	0	0	0	0	0	0	0	0	0
Ped CO	0	0	0	0	0	0	0	0	0	0	0	0	0	0	0	0
Vehicle Ext	5.0	5.0	5.0	5.0	5.0	5.0	5.0	5.0	5.0	5.0	5.0	5.0	5.0	5.0	5.0	5.0
Vehicle Ext 2	0.0	0.0	0.0	0.0	0.0	0.0	0.0	0.0	0.0	0.0	0.0	0.0	0.0	0.0	0.0	0.0
Max 1	35	35	35	35	35	35	35	35	35	35	35	35	35	35	35	35
Max 2	40	40	40	40	40	40	40	40	40	40	40	40	40	40	40	40
Max 3	0	0	0	0	0	0	0	0	0	0	0	0	0	0	0	0
DYM Max	0	0	0	0	0	0	0	0	0	0	0	0	0	0	0	0
DYM Stp	0.0	0.0	0.0	0.0	0.0	0.0	0.0	0.0	0.0	0.0	0.0	0.0	0.0	0.0	0.0	0.0
Yellow	3.0	3.0	3.0	3.0	3.0	3.0	3.0	3.0	3.0	3.0	3.0	3.0	3.0	3.0	3.0	3.0
Red Clear	1.0	1.0	1.0	1.0	1.0	1.0	1.0	1.0	1.0	1.0	1.0	1.0	1.0	1.0	1.0	1.0
Red Max	0.0	0.0	0.0	0.0	0.0	0.0	0.0	0.0	0.0	0.0	0.0	0.0	0.0	0.0	0.0	0.0
Red Revert	2.0	2.0	2.0	2.0	2.0	2.0	2.0	2.0	2.0	2.0	2.0	2.0	2.0	2.0	2.0	2.0
ACT B4	0	0	0	0	0	0	0	0	0	0	0	0	0	0	0	0
SEC/ACT	0.0	0.0	0.0	0.0	0.0	0.0	0.0	0.0	0.0	0.0	0.0	0.0	0.0	0.0	0.0	0.0
Max Int	0	0	0	0	0	0	0	0	0	0	0	0	0	0	0	0
Time B4	0	0	0	0	0	0	0	0	0	0	0	0	0	0	0	0
Cars Wt	0	0	0	0	0	0	0	0	0	0	0	0	0	0	0	0
STPT Duc	0.0	0.0	0.0	0.0	0.0	0.0	0.0	0.0	0.0	0.0	0.0	0.0	0.0	0.0	0.0	0.0
Time To Reduce	0	0	0	0	0	0	0	0	0	0	0	0	0	0	0	0
Min Gap	0.0	0.0	0.0	0.0	0.0	0.0	0.0	0.0	0.0	0.0	0.0	0.0	0.0	0.0	0.0	0.0

Plan 4

Phase	1	2	3	4	5	6	7	8	9	10	11	12	13	14	15	16
Min Green	5	5	5	5	5	5	5	5	5	5	5	5	5	5	5	5
BK Min Green	0	0	0	0	0	0	0	0	0	0	0	0	0	0	0	0
CS Min Green	0	0	0	0	0	0	0	0	0	0	0	0	0	0	0	0
Delay Green	0	0	0	0	0	0	0	0	0	0	0	0	0	0	0	0
Walk	0	10	0	10	0	10	0	10	0	10	0	10	0	10	0	10
Walk 2	0	0	0	0	0	0	0	0	0	0	0	0	0	0	0	0
Walk Max	0	0	0	0	0	0	0	0	0	0	0	0	0	0	0	0
Ped Clear	0	16	0	16	0	16	0	16	0	16	0	16	0	16	0	16
Ped Clear 2	0	0	0	0	0	0	0	0	0	0	0	0	0	0	0	0
Ped Clear Max	0	0	0	0	0	0	0	0	0	0	0	0	0	0	0	0
Ped CO	0	0	0	0	0	0	0	0	0	0	0	0	0	0	0	0
Vehicle Ext	5.0	5.0	5.0	5.0	5.0	5.0	5.0	5.0	5.0	5.0	5.0	5.0	5.0	5.0	5.0	5.0
Vehicle Ext 2	0.0	0.0	0.0	0.0	0.0	0.0	0.0	0.0	0.0	0.0	0.0	0.0	0.0	0.0	0.0	0.0
Max 1	35	35	35	35	35	35	35	35	35	35	35	35	35	35	35	35
Max 2	40	40	40	40	40	40	40	40	40	40	40	40	40	40	40	40
Max 3	0	0	0	0	0	0	0	0	0	0	0	0	0	0	0	0
DYM Max	0	0	0	0	0	0	0	0	0	0	0	0	0	0	0	0
DYM Stp	0.0	0.0	0.0	0.0	0.0	0.0	0.0	0.0	0.0	0.0	0.0	0.0	0.0	0.0	0.0	0.0
Yellow	3.0	3.0	3.0	3.0	3.0	3.0	3.0	3.0	3.0	3.0	3.0	3.0	3.0	3.0	3.0	3.0
Red Clear	1.0	1.0	1.0	1.0	1.0	1.0	1.0	1.0	1.0	1.0	1.0	1.0	1.0	1.0	1.0	1.0
Red Max	0.0	0.0	0.0	0.0	0.0	0.0	0.0	0.0	0.0	0.0	0.0	0.0	0.0	0.0	0.0	0.0
Red Revert	2.0	2.0	2.0	2.0	2.0	2.0	2.0	2.0	2.0	2.0	2.0	2.0	2.0	2.0	2.0	2.0
ACT B4	0	0	0	0	0	0	0	0	0	0	0	0	0	0	0	0
SEC/ACT	0.0	0.0	0.0	0.0	0.0	0.0	0.0	0.0	0.0	0.0	0.0	0.0	0.0	0.0	0.0	0.0
Max Int	0	0	0	0	0	0	0	0	0	0	0	0	0	0	0	0
Time B4	0	0	0	0	0	0	0	0	0	0	0	0	0	0	0	0
Cars Wt	0	0	0	0	0	0	0	0	0	0	0	0	0	0	0	0
STPT Duc	0.0	0.0	0.0	0.0	0.0	0.0	0.0	0.0	0.0	0.0	0.0	0.0	0.0	0.0	0.0	0.0
Time To Reduce	0	0	0	0	0	0	0	0	0	0	0	0	0	0	0	0
Min Gap	0.0	0.0	0.0	0.0	0.0	0.0	0.0	0.0	0.0	0.0	0.0	0.0	0.0	0.0	0.0	0.0

Milliken timing 082017 - Milliken @ 7th 111522

Controller Overlaps

Vehicle Overlaps (MM)2-2

Overlap	Type	Lag Green	Yellow	Red	Advance Green

Phases

Overlap	Phase	Included	Protect	Modifier	Ped Protect	Not Overlap	Lag X Phase	Lag 2 Phase	Flash Green

Guaranteed Minimum Time Data (MM) 2-4
Phase Time Data

Phase	Min Green	Walk	Ped Clear	Yellow	Red Clear	Overlap Green
A01	5	0	7	3.0	0.0	5
B02	5	0	7	3.0	0.0	5
C03	5	0	7	3.0	0.0	5
D04	5	0	7	3.0	0.0	5
E05	5	0	7	3.0	0.0	5
F06	5	0	7	3.0	0.0	5
G07	5	0	7	3.0	0.0	5
H08	5	0	7	3.0	0.0	5
I09	5	0	7	3.0	0.0	5
J10	5	0	7	3.0	0.0	5
K11	5	0	7	3.0	0.0	5
L12	5	0	7	3.0	0.0	5
M13	5	0	7	3.0	0.0	5
N14	5	0	7	3.0	0.0	5
O15	5	0	7	3.0	0.0	5
P16	5	0	7	3.0	0.0	5

Milliken timing 082017 - Milliken @ 7th 111522

Controller Pedestrian Overlaps
Pedestrian Overlaps (MM) 2-3
Included Phase Ped Overlap

Milliken timing 082017 - Milliken @ 7th 111522

Controller Start/Fash (MM) 2-5

Startup

Phase	Phase Setting
4	Y
8	Y

Overlap

Flash > Mon:	Yes
Flash Time:	10
All Red:	5
Power Start Sequence:	1

Automatic Flash

Entry Phase
4
8

Exit Phase
4
8

Overlap Exit

Flash > Mon:	Yes
Exit Flash Interval:	Y
Minimum Auto Flash:	8
Minimumin Recall:	No
Cycle Through Phase:	No

Milliken timing 082017 - Milliken @ 7th 111522

Controller Options

Controller Options (MM)2-6-1

Phase	Flashing Green Phase	Guaranteed Passage	Non Act 1	Non Act 2	Dual Entry	Conditional Service	Conditional Reservice	Ped Reservice	Rest In Walk	Flashing Walk	Ped Clear Yellow	Ped Clear Red	IGRN + Veh Ext
2	No	No	Yes	No	Yes	No	No	No	No	No	No	No	No
4	No	No	No	Yes	Yes	No	No	No	No	No	No	No	No
6	No	No	Yes	No	Yes	No	No	No	No	No	No	No	No
8	No	No	No	Yes	Yes	No	No	No	No	No	No	No	No

Ped Clear Protect: Off Red Revert: 2.0

Act Pre-Time (MM)2-7

Pre-Time Mode Enable: No Free Input Enables Pre-Timed: Yes

Pre-Timed Phase

Phase Recall Options (MM)2-8

Plan	Phase	Lock Detector	Vehicle Recall	Ped Recall	Max Recall	Soft Recall	No Rest	AI Calc
1	2	No	Yes	No	No	No	No	No
1	6	No	Yes	No	No	No	No	No
2	1	Yes	No	No	No	No	No	No
2	2	Yes	No	No	No	No	No	No
2	3	Yes	No	No	No	No	No	No
2	4	Yes	No	No	No	No	No	No
2	5	Yes	No	No	No	No	No	No
2	6	Yes	No	No	No	No	No	No
2	7	Yes	No	No	No	No	No	No
2	8	Yes	No	No	No	No	No	No
2	9	Yes	No	No	No	No	No	No
2	10	Yes	No	No	No	No	No	No
2	11	Yes	No	No	No	No	No	No
2	12	Yes	No	No	No	No	No	No
2	13	Yes	No	No	No	No	No	No
2	14	Yes	No	No	No	No	No	No
2	15	Yes	No	No	No	No	No	No
2	16	Yes	No	No	No	No	No	No
3	1	Yes	No	No	No	No	No	No
3	2	Yes	No	No	No	No	No	No
3	3	Yes	No	No	No	No	No	No
3	4	Yes	No	No	No	No	No	No
3	5	Yes	No	No	No	No	No	No
3	6	Yes	No	No	No	No	No	No
3	7	Yes	No	No	No	No	No	No
3	8	Yes	No	No	No	No	No	No
3	9	Yes	No	No	No	No	No	No
3	10	Yes	No	No	No	No	No	No
3	11	Yes	No	No	No	No	No	No
3	12	Yes	No	No	No	No	No	No
3	13	Yes	No	No	No	No	No	No
3	14	Yes	No	No	No	No	No	No
3	15	Yes	No	No	No	No	No	No
3	16	Yes	No	No	No	No	No	No
4	1	Yes	No	No	No	No	No	No
4	2	Yes	No	No	No	No	No	No
4	3	Yes	No	No	No	No	No	No

4	4	Yes	No	No	No	No	No	No
4	5	Yes	No	No	No	No	No	No
4	6	Yes	No	No	No	No	No	No
4	7	Yes	No	No	No	No	No	No
4	8	Yes	No	No	No	No	No	No
4	9	Yes	No	No	No	No	No	No
4	10	Yes	No	No	No	No	No	No
4	11	Yes	No	No	No	No	No	No
4	12	Yes	No	No	No	No	No	No
4	13	Yes	No	No	No	No	No	No
4	14	Yes	No	No	No	No	No	No
4	15	Yes	No	No	No	No	No	No
4	16	Yes	No	No	No	No	No	No

Milliken timing 082017 - Milliken @ 7th 111522

Coordination Options
Coordination Options (MM)3-1

Manual Pattern:	Auto
ECPI Coord:	Yes
System Source:	HDW
System Format:	STD
Splits In:	Percent
Offsets In:	Percent
Transition:	Smooth
Max Select:	MAXINH
Dwell/Add Time:	0
Dly Coord Wz-Lz:	No
Force Off:	Float
Offset Reference:	Lead
Use Ped Time:	Yes
Ped Recall:	No
Ped Resv:	No
Local Zero Ovrd:	No
Fo Add Ini Green:	No
Re-sync Count:	0
Multisync:	No

Split Demand (MM)3-5

Demand 1 Phase	Demand 2 Phase

Demand	Detector	Call Time	Cycle Count

Auto Perm Minimum Green (Seconds) (MM)3-4

Phase	Min Green

Milliken timing 082017 - Milliken @ 7th 111522

Coordination Pattern Data

Pattern Data (MM)3-2

Pattern	Split Pattern	TS2	Cycle	Std(COS)	Offset Value	Splits In	Offsets In	Actuated Coord
4	4	1-1	100	411	13	Percent	Percent	Yes
6	6	1-3	100	611	11	Percent	Percent	Yes
7	7	2-1	100	411	16	Percent	Percent	No
9	9	2-3	100	611	10	Percent	Percent	No

Pattern	Timing Plan	Actuated Walk Rest	Sequence	Phase Reservice	Action Plan	XArt Pattern	Vehicle Perm 1	Vehicle Perm 2	Vehicle Perm 3
4	1	No	0	No	4	0	0	0	0
6	1	No	0	No	6	0	0	0	0
7	0	No	0	No	0	0	0	0	0
9	0	No	0	No	0	0	0	0	0

Pattern	Ring Split Ext 1	Ring Split Ext 2	Ring Split Ext 3	Ring Split Ext 4	Split Demand Pattern 1	Split Demand Pattern 2	Ring Displ 2	Ring Displ 3	Ring Displ 4
4	0	0	0	0	0	0	0	0	0
6	0	0	0	0	0	0	0	0	0
7	0	0	0	0	0	0	0	0	0
9	0	0	0	0	0	0	0	0	0

Split Preference Phases

Pattern	Phase	Preference 1	Preference 2

Special Functions

Pattern	Function	Output

Split Pattern Data (MM)3-3

Coord Phases

Split Pattern	Phase	Split
4	1	14
4	2	27
4	3	14
4	4	45
4	5	14
4	6	27
4	7	14
4	8	45
6	1	14
6	2	24
6	3	20
6	4	42
6	5	14
6	6	24
6	7	19
6	8	43
7	1	17
7	2	51
7	4	32
7	5	17
7	6	51
7	8	32
9	1	15

Split/Modes

Split Pattern	Mode	Phase 1	2	3	4	5	6	7	8	9	10	11	12	13	14	15	16
4	Coord				X				X								
6	Coord				X				X								
7	Coord	X				X											
9	Coord	X				X											

9	2	55
9	4	30
9	5	15
9	6	55
9	8	30

Milliken timing 082017 - Milliken @ 7th 111522

Preemptor Preempt Plan (MM)4-1

Preempt Phases

Preempt	Phase	Track Clear Veh	Dwell Veh	Dwell Ped	Cycling Veh	Cycling Ped	Exit Phase	Exit Calls	Special Function
3	2	No	Yes	No	No	No	No	No	No
3	5	No	Yes	No	No	No	No	No	No
4	1	No	Yes	No	No	No	No	No	No
4	6	No	Yes	No	No	No	No	No	No
5	4	No	Yes	No	No	No	No	No	No
5	8	No	Yes	No	No	No	No	No	No
6	4	No	Yes	No	No	No	No	No	No
6	8	No	Yes	No	No	No	No	No	No

Preempt Overlaps

Preempt	Overlap	Track Clear	Enable Trailing	Dwell Overlap	Cycling Overlap
3	A	No	No	No	No
3	B	No	No	No	No
3	C	No	No	No	No
3	D	No	No	No	No
3	E	No	No	No	No
3	F	No	No	No	No
3	G	No	No	No	No
3	H	No	No	No	No
3	I	No	No	No	No
3	J	No	No	No	No
3	K	No	No	No	No
3	L	No	No	No	No
3	M	No	No	No	No
3	N	No	No	No	No
3	O	No	No	No	No
3	P	No	No	No	No
4	A	No	No	No	No
4	B	No	No	No	No
4	C	No	No	No	No
4	D	No	No	No	No
4	E	No	No	No	No
4	F	No	No	No	No
4	G	No	No	No	No
4	H	No	No	No	No
4	I	No	No	No	No
4	J	No	No	No	No
4	K	No	No	No	No
4	L	No	No	No	No
4	M	No	No	No	No
4	N	No	No	No	No
4	O	No	No	No	No
4	P	No	No	No	No
5	A	No	No	No	No
5	B	No	No	No	No
5	C	No	No	No	No
5	D	No	No	No	No
5	E	No	No	No	No
5	F	No	No	No	No
5	G	No	No	No	No
5	H	No	No	No	No

5	I	No	No	No	No
5	J	No	No	No	No
5	K	No	No	No	No
5	L	No	No	No	No
5	M	No	No	No	No
5	N	No	No	No	No
5	O	No	No	No	No
5	P	No	No	No	No
6	A	No	No	No	No
6	B	No	No	No	No
6	C	No	No	No	No
6	D	No	No	No	No
6	E	No	No	No	No
6	F	No	No	No	No
6	G	No	No	No	No
6	H	No	No	No	No
6	I	No	No	No	No
6	J	No	No	No	No
6	K	No	No	No	No
6	L	No	No	No	No
6	M	No	No	No	No
6	N	No	No	No	No
6	O	No	No	No	No
6	P	No	No	No	No

Preempt	Enable	Preempt Override	Interlock Enable	Detector Lock	Delay	Inhibit	Override Flash	Duration	CLR > GRN
1	No	Yes	No	Yes	0	0	No	0	No
2	No	Yes	No	Yes	0	0	No	0	No
3	Standard	No	No	No	0	0	No	10	No
4	Standard	No	No	No	0	0	No	10	No
5	Standard	No	No	No	0	0	No	10	No
6	Standard	No	No	No	0	0	No	10	No
7	No	Yes	No	Yes	0	0	No	0	No
8	No	Yes	No	Yes	0	0	No	0	No
9	No	Yes	No	Yes	0	0	No	0	No
10	No	Yes	No	Yes	0	0	No	0	No

Preempt	Term Overlap Asap	PC Through Yellow	Terminate Phase	Ped Dark	Track Clearance Re-service	Dwell Flash	Linked Pmt	Flash Exit Color	Preempt To Coord
1	No	No	No	No	No	Off	0	Green	No
2	No	No	No	No	No	Off	0	Green	No
3	No	No	No	No	No	Off	0	Green	No
4	No	No	No	No	No	Off	0	Green	No
5	No	No	No	No	No	Off	0	Green	No
6	No	No	No	No	No	Off	0	Green	No
7	No	No	No	No	No	Off	0	Green	No
8	No	No	No	No	No	Off	0	Green	No
9	No	No	No	No	No	Off	0	Green	No
10	No	No	No	No	No	Off	0	Green	No

Preempt	Exit Timing Plan	Reservice	Free During Pmt Ring 1	Free During Pmt Ring 2	Free During Pmt Ring 3	Free During Pmt Ring 4
1	0	0	No	No	No	No
2	0	0	No	No	No	No
3	0	0	No	No	No	No
4	0	0	No	No	No	No
5	0	0	No	No	No	No
6	0	0	No	No	No	No

7	0	0	No	No	No	No
8	0	0	No	No	No	No
9	0	0	No	No	No	No
10	0	0	No	No	No	No

Preempt	Entrance Walk	Entrance Ped Clear	Entrance Min Green	Entrance Yellow	Entrance Red	Track Clear Min Green	Gate Down Ext Green	Gate Down Max Green	Track Clear Yellow	Track Clear Red
1	0	255	5	4.0	1.0	0	0	0	4.0	1.0
2	0	255	5	4.0	1.0	0	0	0	4.0	1.0
3	0	255	5	25.5	25.5	0	0	0	25.5	25.5
4	0	255	5	25.5	25.5	0	0	0	25.5	25.5
5	0	255	5	25.5	25.5	0	0	0	25.5	25.5
6	0	255	5	25.5	25.5	0	0	0	25.5	25.5
7	0	255	5	4.0	1.0	0	0	0	4.0	1.0
8	0	255	5	4.0	1.0	0	0	0	4.0	1.0
9	0	255	5	4.0	1.0	0	0	0	4.0	1.0
10	0	255	5	4.0	1.0	0	0	0	4.0	1.0

Preempt	Min Dwell Time	Extend Preempt Input Time	Max Preempt Call Time	Exit Yellow Time	Exit Red Time	Preempt Active Out	Preempt Active Dwell	Other Priority Preempt	Non-Priority Preempt
1	0	0.0	0	4.0	1.0	On	No	Off	Off
2	0	0.0	0	4.0	1.0	On	No	Off	Off
3	10	0.0	60	25.5	25.5	Off	No	Off	Off
4	10	0.0	60	25.5	25.5	Off	No	Off	Off
5	10	0.0	60	25.5	25.5	Off	No	Off	Off
6	10	0.0	60	25.5	25.5	Off	No	Off	Off
7	0	0.0	0	4.0	1.0	On	No	Off	Off
8	0	0.0	0	4.0	1.0	On	No	Off	Off
9	0	0.0	0	4.0	1.0	On	No	Off	Off
10	0	0.0	0	4.0	1.0	On	No	Off	Off

Milliken timing 082017 - Milliken @ 7th 111522

Preemptor Preempt Filtering

Enable Preempt Filtering and TSP/SCP (MM)4-2

Input	Solid	Pulsing
3	Preemption -3	Preemption -7
4	Preemption -4	Preemption -8
5	Preemption -5	Preemption -9
6	Preemption -6	Preemption -10

Milliken timing 082017 - Milliken @ 7th 111522

Time Base Clock/Calendar

Clock/Calendar Options (MM)5-1

Enable Action Plan:	0
Sync Reference Time:	12:00 AM
Sync Reference:	Reference Time
Day Light Savings:	No
Time Reset Input Set Time:	3:30:00
Standard Time From GMT:	-8

Milliken timing 082017 - Milliken @ 7th 111522

Time Base Action Plan

Action Plan (MM)5-2

Plan	Pattern	Veh Det Plan	Flash	Red Reset	Controller Seq	Timing Plan	System Override	Detector Log	Veh Det Diag Plan	Ped Det Diag Plan	Dimming Enable
4	4	0	No	No	0	1	Yes	None	0	0	No
6	6	0	No	No	0	1	Yes	None	0	0	No
55	254 - FREE	0	No	No	0	1	Yes	None	0	0	No

Action Plan Phases

Plan	Phase	Red Rcl	Walk 2	Vex 2	Veh Rcl	Max Rcl	Max 2	Max 3	CS Inhibit	Omit

Acion Plan Special Functions

Plan	Function

Action Plan Auxiliary Functions

Plan	Function

Logic Statement Control

Plan	LP	Statement Control
1	1	E

Milliken timing 082017 - Milliken @ 7th 111522

Time Base Day Plan/Schedule

Day Plan (MM)5-3

Plan	Event	Action Plan	Start Time
1	1	7	6:30 AM
1	2	55	9:00 AM
1	3	9	3:45 PM
1	4	55	7:00 PM

Schedule (MM)5-4

Schedule Number	Day Plan Number	Months	Days of Week	Days of Month
1	1	Jan, Feb, Mar, Apr, May, Jun, Jul, Aug, Sept, Oct, Nov, Dec	Mon, Tues, Wed, Thurs, Fri	1, 2, 3, 4, 5, 6, 7, 8, 9, 10, 11, 12, 13, 14, 15, 16, 17, 18, 19, 20, 21, 22, 23, 24, 25, 26, 27, 28, 29, 30, 31

Milliken timing 082017 - Milliken @ 7th 111522

Time Base Exceptions

Exception Day Program (MM)5-5

Day	Fixed/Float	Month	Day of Week/Month	Week of Month/Year	Day Plan
1	FLOAT	0	0	0	0
2	FLOAT	0	0	0	0
3	FLOAT	0	0	0	0
4	FLOAT	0	0	0	0
5	FLOAT	0	0	0	0
6	FLOAT	0	0	0	0
7	FLOAT	0	0	0	0
8	FLOAT	0	0	0	0
9	FLOAT	0	0	0	0
10	FLOAT	0	0	0	0
11	FLOAT	0	0	0	0
12	FLOAT	0	0	0	0
13	FLOAT	0	0	0	0
14	FLOAT	0	0	0	0
15	FLOAT	0	0	0	0
16	FLOAT	0	0	0	0
17	FLOAT	0	0	0	0
18	FLOAT	0	0	0	0
19	FLOAT	0	0	0	0
20	FLOAT	0	0	0	0
21	FLOAT	0	0	0	0
22	FLOAT	0	0	0	0
23	FLOAT	0	0	0	0
24	FLOAT	0	0	0	0
25	FLOAT	0	0	0	0
26	FLOAT	0	0	0	0
27	FLOAT	0	0	0	0
28	FLOAT	0	0	0	0
29	FLOAT	0	0	0	0
30	FLOAT	0	0	0	0
31	FLOAT	0	0	0	0
32	FLOAT	0	0	0	0
33	FLOAT	0	0	0	0
34	FLOAT	0	0	0	0
35	FLOAT	0	0	0	0
36	FLOAT	0	0	0	0

Milliken timing 082017 - Milliken @ 7th 111522

Detectors

Detectors Page 1

Vehicle Detectors Setup (MM)6-1

Vehicle Plan	Detector Number	Called
1	1	2
1	2	2
1	3	2
1	4	2
1	5	6
1	6	6
1	7	5
1	8	5
1	9	1
1	10	1
1	11	6
1	12	6
1	13	4
1	14	4
1	15	2
1	16	6
1	27	8
1	28	8
2	1	2
4	1	4

Vehicle Detector Setup (MM)6-2 continued

Detector Number	ECPI	TS2 Detector	Detector Description

Vehicle Detector Setup (MM)6-2 continued

Detector Number	Vehicle Plan	Assigned Phase	Switch Phase	Extend Time	Delay Time	Queue Limit	Yellow Lock	Added Option	Call Option	Passage Option	Queue Option	NTCIP Occupancy	NTCIP Volume	ECPI Log	Red Lock
1	1	2	0	0.0	0.0	0	No	No	Yes	Yes	No	No	No	No	No
1	2	1	0	3.0	0.0	0	No	No	Yes	Yes	No	No	No	No	No
1	3	1	0	0.0	0.0	0	No	No	Yes	Yes	No	No	No	No	No
1	4	1	0	0.0	0.0	0	No	No	Yes	Yes	No	No	No	No	No
2	1	2	0	0.0	0.0	0	No	No	Yes	Yes	No	No	No	No	No
2	2	2	0	0.0	0.0	0	No	No	Yes	Yes	No	No	No	No	No
2	3	2	0	0.0	0.0	0	No	No	Yes	Yes	No	No	No	No	No
2	4	2	0	0.0	0.0	0	No	No	Yes	Yes	No	No	No	No	No
3	1	2	0	0.0	0.0	0	No	No	Yes	Yes	No	No	No	No	No
3	2	3	0	0.0	0.0	0	No	No	Yes	Yes	No	No	No	No	No
3	3	3	0	0.0	0.0	0	No	No	Yes	Yes	No	No	No	No	No
3	4	3	0	0.0	0.0	0	No	No	Yes	Yes	No	No	No	No	No
4	1	2	0	0.0	0.0	0	No	No	Yes	Yes	No	No	No	No	No
4	2	4	0	0.0	0.0	0	No	No	Yes	Yes	No	No	No	No	No
4	3	4	0	0.0	0.0	0	No	No	Yes	Yes	No	No	No	No	No
4	4	4	0	0.0	0.0	0	No	No	Yes	Yes	No	No	No	No	No
5	1	6	0	0.0	0.0	0	No	No	Yes	Yes	No	No	No	No	No
5	2	5	0	0.0	0.0	0	No	No	Yes	Yes	No	No	No	No	No
5	3	5	0	0.0	0.0	0	No	No	Yes	Yes	No	No	No	No	No
5	4	5	0	0.0	0.0	0	No	No	Yes	Yes	No	No	No	No	No
6	1	6	0	0.0	0.0	0	No	No	Yes	Yes	No	No	No	No	No
6	2	6	0	0.0	0.0	0	No	No	Yes	Yes	No	No	No	No	No
6	3	6	0	0.0	0.0	0	No	No	Yes	Yes	No	No	No	No	No
6	4	6	0	0.0	0.0	0	No	No	Yes	Yes	No	No	No	No	No
7	1	5	0	0.0	0.0	0	No	No	Yes	Yes	No	No	No	No	No
7	2	7	0	0.0	0.0	0	No	No	Yes	Yes	No	No	No	No	No
7	3	7	0	0.0	0.0	0	No	No	Yes	Yes	No	No	No	No	No
7	4	7	0	0.0	0.0	0	No	No	Yes	Yes	No	No	No	No	No
8	1	5	0	0.0	0.0	0	No	No	Yes	Yes	No	No	No	No	No
8	2	8	0	0.0	0.0	0	No	No	Yes	Yes	No	No	No	No	No
8	3	8	0	0.0	0.0	0	No	No	Yes	Yes	No	No	No	No	No
8	4	8	0	0.0	0.0	0	No	No	Yes	Yes	No	No	No	No	No
9	1	1	0	0.0	0.0	0	No	No	Yes	Yes	No	No	No	No	No
9	2	9	0	0.0	0.0	0	No	No	Yes	Yes	No	No	No	No	No
9	3	9	0	0.0	0.0	0	No	No	Yes	Yes	No	No	No	No	No
9	4	9	0	0.0	0.0	0	No	No	Yes	Yes	No	No	No	No	No
10	1	1	0	0.0	0.0	0	No	No	Yes	Yes	No	No	No	No	No
10	2	10	0	0.0	0.0	0	No	No	Yes	Yes	No	No	No	No	No
10	3	10	0	0.0	0.0	0	No	No	Yes	Yes	No	No	No	No	No
10	4	10	0	0.0	0.0	0	No	No	Yes	Yes	No	No	No	No	No
11	1	6	0	0.0	0.0	0	No	No	Yes	Yes	No	No	No	No	No
11	2	11	0	0.0	0.0	0	No	No	Yes	Yes	No	No	No	No	No
11	3	11	0	0.0	0.0	0	No	No	Yes	Yes	No	No	No	No	No
11	4	11	0	0.0	0.0	0	No	No	Yes	Yes	No	No	No	No	No
12	1	6	0	0.0	0.0	0	No	No	Yes	Yes	No	No	No	No	No
12	2	12	0	0.0	0.0	0	No	No	Yes	Yes	No	No	No	No	No
12	3	12	0	0.0	0.0	0	No	No	Yes	Yes	No	No	No	No	No
12	4	12	0	0.0	0.0	0	No	No	Yes	Yes	No	No	No	No	No
13	1	4	0	0.0	0.0	0	No	No	Yes	Yes	No	No	No	No	No
13	2	13	0	0.0	0.0	0	No	No	Yes	Yes	No	No	No	No	No
13	3	13	0	0.0	0.0	0	No	No	Yes	Yes	No	No	No	No	No
13	4	13	0	0.0	0.0	0	No	No	Yes	Yes	No	No	No	No	No

14	1	4	0	0.0	0.0	0	No	No	Yes	Yes	No	No	No	No	No
14	2	14	0	0.0	0.0	0	No	No	Yes	Yes	No	No	No	No	No
14	3	14	0	0.0	0.0	0	No	No	Yes	Yes	No	No	No	No	No
14	4	14	0	0.0	0.0	0	No	No	Yes	Yes	No	No	No	No	No
15	1	2	0	0.0	0.0	0	No	No	Yes	Yes	No	No	No	No	No
15	2	15	0	0.0	0.0	0	No	No	Yes	Yes	No	No	No	No	No
15	3	15	0	0.0	0.0	0	No	No	Yes	Yes	No	No	No	No	No
15	4	15	0	0.0	0.0	0	No	No	Yes	Yes	No	No	No	No	No
16	1	6	0	0.0	0.0	0	No	No	Yes	Yes	No	No	No	No	No
16	2	16	0	0.0	0.0	0	No	No	Yes	Yes	No	No	No	No	No
16	3	16	0	0.0	0.0	0	No	No	Yes	Yes	No	No	No	No	No
16	4	16	0	0.0	0.0	0	No	No	Yes	Yes	No	No	No	No	No
27	1	8	0	0.0	0.0	0	No	No	Yes	Yes	No	No	No	No	No
28	1	8	0	0.0	0.0	0	No	No	Yes	Yes	No	No	No	No	No

Ped and System Detector Options
(MM)6-4

Phase Ped Detector

Local Ped Detector	Number
1	1
2	2
3	3
4	4
5	5
6	6
7	7
8	8
9	9
10	10
11	11
12	12
13	13
14	14
15	15
16	16

Local System Detector

Local System Detector	Number

Milliken timing 082017 - Milliken @ 7th 111522

Detectors

Detectors Page 2

Log - Speed Detector Setup (MM)6-5

NTCIP Log Period: 0	ECPI Log Period: TBAP	Length Unit: Inch

Speed Detector	Local Detector	One/Two Detector	Vehicle Length	Trap Length	Enable Log
1	0	1	0	0	No
2	0	1	0	0	No
3	0	1	0	0	No
4	0	1	0	0	No
5	0	1	0	0	No
6	0	1	0	0	No
7	0	1	0	0	No
8	0	1	0	0	No
9	0	1	0	0	No
10	0	1	0	0	No
11	0	1	0	0	No
12	0	1	0	0	No
13	0	1	0	0	No
14	0	1	0	0	No
15	0	1	0	0	No
16	0	1	0	0	No

Vehicle Detector Diagnostics (MM)6-6

Plan	Detector	Counts	Act	Pres	Multiplier	Failed Time	Failed Call Delay
1	1	0	0	0	1	255	0
1	2	0	0	0	1	255	0
1	3	0	0	0	1	255	0
1	4	0	0	0	1	255	0
1	5	0	0	0	1	255	0
1	6	0	0	0	1	255	0
1	7	0	0	0	1	255	0
1	8	0	0	0	1	255	0
1	9	0	0	0	1	255	0
1	10	0	0	0	1	255	0
1	11	0	0	0	1	255	0
1	12	0	0	0	1	255	0
1	13	0	0	0	1	255	0
1	14	0	0	0	1	255	0
1	15	0	0	0	1	255	0
1	16	0	0	0	1	255	0
1	17	0	0	0	1	255	0
1	18	0	0	0	1	255	0
1	19	0	0	0	1	255	0
1	20	0	0	0	1	255	0
1	21	0	0	0	1	255	0
1	22	0	0	0	1	255	0
1	23	0	0	0	1	255	0
1	24	0	0	0	1	255	0
1	25	0	0	0	1	255	0
1	26	0	0	0	1	255	0
1	27	0	0	0	1	255	0
1	28	0	0	0	1	255	0

1	29	0	0	0	1	255	0
1	30	0	0	0	1	255	0
1	31	0	0	0	1	255	0
1	32	0	0	0	1	255	0
1	33	0	0	0	1	255	0
1	34	0	0	0	1	255	0
1	35	0	0	0	1	255	0
1	36	0	0	0	1	255	0
1	37	0	0	0	1	255	0
1	38	0	0	0	1	255	0
1	39	0	0	0	1	255	0
1	40	0	0	0	1	255	0
1	41	0	0	0	1	255	0
1	42	0	0	0	1	255	0
1	43	0	0	0	1	255	0
1	44	0	0	0	1	255	0
1	45	0	0	0	1	255	0
1	46	0	0	0	1	255	0
1	47	0	0	0	1	255	0
1	48	0	0	0	1	255	0
1	49	0	0	0	1	255	0
1	50	0	0	0	1	255	0
1	51	0	0	0	1	255	0
1	52	0	0	0	1	255	0
1	53	0	0	0	1	255	0
1	54	0	0	0	1	255	0
1	55	0	0	0	1	255	0
1	56	0	0	0	1	255	0
1	57	0	0	0	1	255	0
1	58	0	0	0	1	255	0
1	59	0	0	0	1	255	0
1	60	0	0	0	1	255	0
1	61	0	0	0	1	255	0
1	62	0	0	0	1	255	0
1	63	0	0	0	1	255	0
1	64	0	0	0	1	255	0
2	1	0	0	0	1	255	0
2	2	0	0	0	1	255	0
2	3	0	0	0	1	255	0
2	4	0	0	0	1	255	0
2	5	0	0	0	1	255	0
2	6	0	0	0	1	255	0
2	7	0	0	0	1	255	0
2	8	0	0	0	1	255	0
2	9	0	0	0	1	255	0
2	10	0	0	0	1	255	0
2	11	0	0	0	1	255	0
2	12	0	0	0	1	255	0
2	13	0	0	0	1	255	0
2	14	0	0	0	1	255	0
2	15	0	0	0	1	255	0
2	16	0	0	0	1	255	0
2	17	0	0	0	1	255	0
2	18	0	0	0	1	255	0
2	19	0	0	0	1	255	0
2	20	0	0	0	1	255	0
2	21	0	0	0	1	255	0
2	22	0	0	0	1	255	0
2	23	0	0	0	1	255	0
2	24	0	0	0	1	255	0

2	25	0	0	0	1	255	0
2	26	0	0	0	1	255	0
2	27	0	0	0	1	255	0
2	28	0	0	0	1	255	0
2	29	0	0	0	1	255	0
2	30	0	0	0	1	255	0
2	31	0	0	0	1	255	0
2	32	0	0	0	1	255	0
2	33	0	0	0	1	255	0
2	34	0	0	0	1	255	0
2	35	0	0	0	1	255	0
2	36	0	0	0	1	255	0
2	37	0	0	0	1	255	0
2	38	0	0	0	1	255	0
2	39	0	0	0	1	255	0
2	40	0	0	0	1	255	0
2	41	0	0	0	1	255	0
2	42	0	0	0	1	255	0
2	43	0	0	0	1	255	0
2	44	0	0	0	1	255	0
2	45	0	0	0	1	255	0
2	46	0	0	0	1	255	0
2	47	0	0	0	1	255	0
2	48	0	0	0	1	255	0
2	49	0	0	0	1	255	0
2	50	0	0	0	1	255	0
2	51	0	0	0	1	255	0
2	52	0	0	0	1	255	0
2	53	0	0	0	1	255	0
2	54	0	0	0	1	255	0
2	55	0	0	0	1	255	0
2	56	0	0	0	1	255	0
2	57	0	0	0	1	255	0
2	58	0	0	0	1	255	0
2	59	0	0	0	1	255	0
2	60	0	0	0	1	255	0
2	61	0	0	0	1	255	0
2	62	0	0	0	1	255	0
2	63	0	0	0	1	255	0
2	64	0	0	0	1	255	0
3	1	0	0	0	1	255	0
3	2	0	0	0	1	255	0
3	3	0	0	0	1	255	0
3	4	0	0	0	1	255	0
3	5	0	0	0	1	255	0
3	6	0	0	0	1	255	0
3	7	0	0	0	1	255	0
3	8	0	0	0	1	255	0
3	9	0	0	0	1	255	0
3	10	0	0	0	1	255	0
3	11	0	0	0	1	255	0
3	12	0	0	0	1	255	0
3	13	0	0	0	1	255	0
3	14	0	0	0	1	255	0
3	15	0	0	0	1	255	0
3	16	0	0	0	1	255	0
3	17	0	0	0	1	255	0
3	18	0	0	0	1	255	0
3	19	0	0	0	1	255	0
3	20	0	0	0	1	255	0

3	21	0	0	0	1	255	0
3	22	0	0	0	1	255	0
3	23	0	0	0	1	255	0
3	24	0	0	0	1	255	0
3	25	0	0	0	1	255	0
3	26	0	0	0	1	255	0
3	27	0	0	0	1	255	0
3	28	0	0	0	1	255	0
3	29	0	0	0	1	255	0
3	30	0	0	0	1	255	0
3	31	0	0	0	1	255	0
3	32	0	0	0	1	255	0
3	33	0	0	0	1	255	0
3	34	0	0	0	1	255	0
3	35	0	0	0	1	255	0
3	36	0	0	0	1	255	0
3	37	0	0	0	1	255	0
3	38	0	0	0	1	255	0
3	39	0	0	0	1	255	0
3	40	0	0	0	1	255	0
3	41	0	0	0	1	255	0
3	42	0	0	0	1	255	0
3	43	0	0	0	1	255	0
3	44	0	0	0	1	255	0
3	45	0	0	0	1	255	0
3	46	0	0	0	1	255	0
3	47	0	0	0	1	255	0
3	48	0	0	0	1	255	0
3	49	0	0	0	1	255	0
3	50	0	0	0	1	255	0
3	51	0	0	0	1	255	0
3	52	0	0	0	1	255	0
3	53	0	0	0	1	255	0
3	54	0	0	0	1	255	0
3	55	0	0	0	1	255	0
3	56	0	0	0	1	255	0
3	57	0	0	0	1	255	0
3	58	0	0	0	1	255	0
3	59	0	0	0	1	255	0
3	60	0	0	0	1	255	0
3	61	0	0	0	1	255	0
3	62	0	0	0	1	255	0
3	63	0	0	0	1	255	0
3	64	0	0	0	1	255	0
4	1	0	0	0	1	255	0
4	2	0	0	0	1	255	0
4	3	0	0	0	1	255	0
4	4	0	0	0	1	255	0
4	5	0	0	0	1	255	0
4	6	0	0	0	1	255	0
4	7	0	0	0	1	255	0
4	8	0	0	0	1	255	0
4	9	0	0	0	1	255	0
4	10	0	0	0	1	255	0
4	11	0	0	0	1	255	0
4	12	0	0	0	1	255	0
4	13	0	0	0	1	255	0
4	14	0	0	0	1	255	0
4	15	0	0	0	1	255	0
4	16	0	0	0	1	255	0

4	17	0	0	0	1	255	0
4	18	0	0	0	1	255	0
4	19	0	0	0	1	255	0
4	20	0	0	0	1	255	0
4	21	0	0	0	1	255	0
4	22	0	0	0	1	255	0
4	23	0	0	0	1	255	0
4	24	0	0	0	1	255	0
4	25	0	0	0	1	255	0
4	26	0	0	0	1	255	0
4	27	0	0	0	1	255	0
4	28	0	0	0	1	255	0
4	29	0	0	0	1	255	0
4	30	0	0	0	1	255	0
4	31	0	0	0	1	255	0
4	32	0	0	0	1	255	0
4	33	0	0	0	1	255	0
4	34	0	0	0	1	255	0
4	35	0	0	0	1	255	0
4	36	0	0	0	1	255	0
4	37	0	0	0	1	255	0
4	38	0	0	0	1	255	0
4	39	0	0	0	1	255	0
4	40	0	0	0	1	255	0
4	41	0	0	0	1	255	0
4	42	0	0	0	1	255	0
4	43	0	0	0	1	255	0
4	44	0	0	0	1	255	0
4	45	0	0	0	1	255	0
4	46	0	0	0	1	255	0
4	47	0	0	0	1	255	0
4	48	0	0	0	1	255	0
4	49	0	0	0	1	255	0
4	50	0	0	0	1	255	0
4	51	0	0	0	1	255	0
4	52	0	0	0	1	255	0
4	53	0	0	0	1	255	0
4	54	0	0	0	1	255	0
4	55	0	0	0	1	255	0
4	56	0	0	0	1	255	0
4	57	0	0	0	1	255	0
4	58	0	0	0	1	255	0
4	59	0	0	0	1	255	0
4	60	0	0	0	1	255	0
4	61	0	0	0	1	255	0
4	62	0	0	0	1	255	0
4	63	0	0	0	1	255	0
4	64	0	0	0	1	255	0

Pedestrian Detector Diagnotics (MM)6-7

Plan	Detector	Counts	Act	Pres	Multiplier

APPENDIX E2

```
ÉÍÍÍÍÍÍÍÍÍÍÍÍÍÍÍÍÍÍÍÍÍÍÍÍÍÍÍÍÍÍÍÍÍÍÍÍÍÍÍÍÍÍ»
º**************************************º
º*   ECONOLITE CONTROL PRODUCTS, INC.   *º
º*            ASC/2-2000                *º
º*          Copyright (C) 1992          *º
º*                                      *º
º* City of Ontario, Traffic Engineering *º
º*  ASC/2-2100  Configuration Ver. 1.1  *º
º*                                      *º
º*   SOFTWARE ASSY             VERSION  *º
º*   BOOT            32783        1.26  *º
º*   MAIN PROGRAM    32787        1.61  *º
º*                                      *º
º*                                      *º
º*                                      *º
º*                                      *º
º**************************************º
ÈÍÍÍÍÍÍÍÍÍÍÍÍÍÍÍÍÍÍÍÍÍÍÍÍÍÍÍÍÍÍÍÍÍÍÍÍÍÍÍÍÍÍ¼

ÉÍÍÍÍÍÍÍÍÍÍÍÍÍÍÍÍÍÍÍÍÍÍÍÍÍÍÍÍÍÍÍÍÍÍÍÍÍÍÍÍÍÍ»
º           CONTROLLER SEQUENCE          º
º                                        º
º    ------------ PRIORITY ------------   º
º                                1  1  1   º
º    1..2..3..4..5..6..7..8..9..0..1..2   º
ºR1  1  2| 3  4| 9 10| 0  0  0  0  0  0   º
ºR2  5  6| 7  8|11 12| 0  0  0  0  0  0   º
ºCG   .  ^  .  ^  .  ^  .  .  .  .  .  .   º
º                                        º
º                                        º
ºR1,R2 = RING 1 AND 2 PHASE ASSIGNMENT.  º
º                                        º
ºCG    = BARRIER LOCATION BETWEEN        º
º        CONCURRENT PHASE TIMING GROUPS. º
º                                        º
ºEND OF SUBMENU                          º
ÈÍÍÍÍÍÍÍÍÍÍÍÍÍÍÍÍÍÍÍÍÍÍÍÍÍÍÍÍÍÍÍÍÍÍÍÍÍÍÍÍÍÍ¼

ÉÍÍÍÍÍÍÍÍÍÍÍÍÍÍÍÍÍÍÍÍÍÍÍÍÍÍÍÍÍÍÍÍÍÍÍÍÍÍÍÍÍÍ»
º              PHASES IN USE             º
º                                        º
º                  ----- PHASE NUMBER ----º
º                                  1 1 1º
º                  1 2 3 4 5 6 7 8 9 0 1 2º
ºPHASES IN USE     . X X X . X . X . . . .º
ºEXCLUSIVE PED     . . . . . . . . . . . .º
º                                        º
º                                        º
º                                        º
º                                        º
º                                        º
º                                        º
º                                        º
º                                        º
º                                        º
ºEND OF SUBMENU                          º
ÈÍÍÍÍÍÍÍÍÍÍÍÍÍÍÍÍÍÍÍÍÍÍÍÍÍÍÍÍÍÍÍÍÍÍÍÍÍÍÍÍÍÍ¼

ÉÍÍÍÍÍÍÍÍÍÍÍÍÍÍÍÍÍÍÍÍÍÍÍÍÍÍÍÍÍÍÍÍÍÍÍÍÍÍÍÍÍÍ»
ºPHASE TO LOAD SWITCH (MMU) ASSIGNMENT   º
º                                        º
ºLOAD       SIGNAL    LOAD       SIGNAL  º
ºSWITCH     DRIVER    SWITCH     DRIVER  º
```

```
º(MMU)      GROUP     (MMU)      GROUP   º
ºCHANNEL PH/OLAP PED  CHANNEL PH/OLAP PEDº
º   1       0     .     9       0     . º
º   2       2     .    10       0     . º
º   3       3     .    11       0     . º
º   4       4     .    12       0     . º
º   5       0     .    13       0     . º
º   6       2     X    14       0     . º
º   7       0     .    15       0     . º
º   8       8     .    16       0     . º
ºENTER 13-16 FOR OVERLAPS A-D            º
ºEND OF SUBMENU                          º
ÈÍÍÍÍÍÍÍÍÍÍÍÍÍÍÍÍÍÍÍÍÍÍÍÍÍÍÍÍÍÍÍÍÍÍÍÍÍÍ¼

ÉÍÍÍÍÍÍÍÍÍÍÍÍÍÍÍÍÍÍÍÍÍÍÍÍÍÍÍÍÍÍÍÍÍÍÍÍÍÍ»
º          SDLC OPTIONS/ENABLES          º
º                                        º
º                 ----- BIU NUMBER ----- º
º                 1..2..3..4..5..6..7..8 º
ºTERM & FACIL...  X  .  .  .  .  .  .  . º
ºDETECTOR RACK..  X  .  .  .  .  .  .  . º
º                                        º
ºTYPE 2 RUNS AS TYPE 1................ X º
ºMMU DISABLE.......................... . º
ºDIAGNOSTIC ENABLE (TEST FIXTURE)..... . º
ºPEER TO PEER ENABLE.................. . º
º                                        º
ºPEER TO PEER ADDRESSES:                 º
º1) 255  2) 255  3) 255  4) 255   5) 255 º
º6) 255  7) 255  8) 255  9) 255  10) 255 º
ºEND OF SUBMENU                          º
ÈÍÍÍÍÍÍÍÍÍÍÍÍÍÍÍÍÍÍÍÍÍÍÍÍÍÍÍÍÍÍÍÍÍÍÍÍÍÍ¼

ÉÍÍÍÍÍÍÍÍÍÍÍÍÍÍÍÍÍÍÍÍÍÍÍÍÍÍÍÍÍÍÍÍÍÍÍÍÍÍ»
º         PORT2 CONFIGURATION            º
º                                        º
ºPORT2 PROTOCOL.................  TERMNL  º
ºPORT2 ENABLE..................     YES  º
º                                        º
ºAB3418 ADDRESS.................       0  º
ºAB3418 GROUP ADDRESS...........       0  º
ºAB3418 RESPONSE DELAY..........       0  º
ºAB3418 SINGLE FLAG ENABLE.....      NO  º
ºAB3418 DROP-OUT TIME..........       0  º
ºAB3418 TOD SF SELECT..........       0  º
º                                        º
ºDATA RATE (BPS)................   38.4k  º
ºDATA, PARITY, STOP............ 8, N, 1  º
º                                        º
ºEND OF SUBMENU                          º
ÈÍÍÍÍÍÍÍÍÍÍÍÍÍÍÍÍÍÍÍÍÍÍÍÍÍÍÍÍÍÍÍÍÍÍÍÍÍÍ¼

ÉÍÍÍÍÍÍÍÍÍÍÍÍÍÍÍÍÍÍÍÍÍÍÍÍÍÍÍÍÍÍÍÍÍÍÍÍÍÍ»
º         PORT3 CONFIGURATION            º
º                                        º
ºPORT3 PROTOCOL.................   TELEM  º
ºPORT3 ENABLE..................     YES  º
º                                        º
ºTELEMETRY ADDRESS.............       2  º
ºSYSTEM DETECTOR 9-16 ADDRESS..       0  º
ºTELEMETRY RESPONSE DELAY......    6000  º
º                                        º
ºAB3418 ADDRESS................       0  º
```

```
ºAB3418 GROUP ADDRESS.....        0  º
ºAB3418 RESPONSE DELAY.....       0  º
ºAB3418 SINGLE FLAG ENABLE.....  NO  º
ºAB3418 DROP-OUT TIME.....        0  º
ºAB3418 TOD SF SELECT.....        0  º
ºADDITIONAL SCREEN(S)                o
ÈÍÍÍÍÍÍÍÍÍÍÍÍÍÍÍÍÍÍÍÍÍÍÍÍÍÍÍÍÍÍÍÍÍÍÍÍÍÍ¼

ÉÍÍÍÍÍÍÍÍÍÍÍÍÍÍÍÍÍÍÍÍÍÍÍÍÍÍÍÍÍÍÍÍÍÍÍÍÍÍ»
º         PORT3 CONFIGURATION                 º
o                                             o
o                                             o
ºDUPLEX -- HALF or FULL.....    FULL  º
ºMODEM DATA RATE (BPS).....     1200  º
ºDATA, PARITY, STOP..... 8, O, 1      º
o                                             o
o                                             o
o                                             o
o                                             o
o                                             o
o                                             o
o                                             o
o                                             o
o                                             o
ºEND OF SUBMENU                               o
ÈÍÍÍÍÍÍÍÍÍÍÍÍÍÍÍÍÍÍÍÍÍÍÍÍÍÍÍÍÍÍÍÍÍÍÍÍÍÍ¼

ÉÍÍÍÍÍÍÍÍÍÍÍÍÍÍÍÍÍÍÍÍÍÍÍÍÍÍÍÍÍÍÍÍÍÍÍÍÍÍ»
º            ENABLE EVENT LOGS                º
o                                             o
ºCRITICAL RFE'S (MMU/TF) . . . . . .   X º
ºNON-CRITICAL RFE'S (DET/TEST) . . .   X º
ºDETECTOR ERRORS . . . . . .   X º
ºCOORDINATION ERRORS . . . . . .   X º
ºMMU FLASH FAULTS  . . . . . .   X º
ºLOCAL FLASH FAULTS  . . . . . .   X º
ºPREEMPT . . . . . .   X º
ºPOWER ON/OFF  . . . . . .   X º
ºLOW BATTERY . . . . . .   X º
ºSPARE . . . . . .   . º
ºALARM 1 . . . . . .   X º
ºALARM 2 . . . . . .   X º
ºALARM 3 . . . . . .   X º
ºADDITIONAL SCREEN(S)                         o
ÈÍÍÍÍÍÍÍÍÍÍÍÍÍÍÍÍÍÍÍÍÍÍÍÍÍÍÍÍÍÍÍÍÍÍÍÍÍÍ¼

ÉÍÍÍÍÍÍÍÍÍÍÍÍÍÍÍÍÍÍÍÍÍÍÍÍÍÍÍÍÍÍÍÍÍÍÍÍÍÍ»
º            ENABLE EVENT LOGS                º
o                                             o
ºALARM 4 . . . . . .   X º
ºALARM 5 . . . . . .   X º
ºALARM 6 . . . . . .   X º
ºALARM 7 . . . . . .   X º
ºALARM 8 . . . . . .   X º
ºALARM 9 . . . . . .   X º
ºALARM 10  . . . . . .   X º
ºALARM 11  . . . . . .   X º
ºALARM 12  . . . . . .   . º
ºALARM 13  . . . . . .   . º
ºALARM 14  . . . . . .   . º
ºALARM 15  . . . . . .   . º
ºALARM 16  . . . . . .   . º
ºEND OF SUBMENU                               o
```

```
ÈÍÍÍÍÍÍÍÍÍÍÍÍÍÍÍÍÍÍÍÍÍÍÍÍÍÍÍÍÍÍÍÍÍÍÍÍÍÍÍÍÍÍÍÍÍ¼

ÉÍÍÍÍÍÍÍÍÍÍÍÍÍÍÍÍÍÍÍÍÍÍÍÍÍÍÍÍÍÍÍÍÍÍÍÍÍÍÍÍÍÍÍÍÍ»
º                  OPTIONS                              º
º                                                       º
º                                                       º
º                                                       º
ºSUPERVISOR ACCESS CODE...... 0000                      º
º                                                       º
ºDATA CHANGE ACCESS CODE..... 0000                      º
º                                                       º
ºKEY CLICK ENABLE.............  YES                      º
º                                                       º
ºBACKLIGHT ENABLE.............  YES                      º
º                                                       º
º                                                       º
º                                                       º
º                                                       º
ºEND OF SUBMENU                                         º
ÈÍÍÍÍÍÍÍÍÍÍÍÍÍÍÍÍÍÍÍÍÍÍÍÍÍÍÍÍÍÍÍÍÍÍÍÍÍÍÍÍÍÍÍÍÍ¼

ÉÍÍÍÍÍÍÍÍÍÍÍÍÍÍÍÍÍÍÍÍÍÍÍÍÍÍÍÍÍÍÍÍÍÍÍÍÍÍÍÍÍÍÍÍÍ»
º                  MMU PROGRAM                          º
ºCAN SERVE WITH:                                        º
º             1 1 1 1 1 1 1                             º
ºCHANNEL      6 5 4 3 2 1 0 9 8 7 6 5 4 3 2º
º  1          . . . . . . . . X . . . X X Xº
º  2          . . . . . . . . . . X . . .  º
º  3          . . . . . . . . X . . . .    º
º  4          . . . . . . . . X . . .      º
º  5          . . . . . . . . . . . .      º
º  6          . . . . . . . . . . .        º
º  7          . . . . . . . . . .          º
º  8          . . . . . . . . .            º
º  9          . . . . . . . .              º
º 10          . . . . . . .                º
º 11          . . . . . .                  º
ºADDITIONAL SCREEN(S)                                   º
ÈÍÍÍÍÍÍÍÍÍÍÍÍÍÍÍÍÍÍÍÍÍÍÍÍÍÍÍÍÍÍÍÍÍÍÍÍÍÍÍÍÍÍÍÍÍ¼
♀
ÉÍÍÍÍÍÍÍÍÍÍÍÍÍÍÍÍÍÍÍÍÍÍÍÍÍÍÍÍÍÍÍÍÍÍÍÍÍÍÍÍÍÍÍÍÍ»
º                  MMU PROGRAM                          º
ºCAN SERVE WITH:                                        º
º             1 1 1 1 1 1 1                             º
ºCHANNEL      6 5 4 3 2 1 0 9 8 7 6 5 4 3 2º
º 12          . . . .                                   º
º 13          . . .                                     º
º 14          . .                                       º
º 15          .                                         º
º                                                       º
º                                                       º
º                                                       º
º                                                       º
º                                                       º
º                                                       º
º                                                       º
ºEND OF SUBMENU                                         º
ÈÍÍÍÍÍÍÍÍÍÍÍÍÍÍÍÍÍÍÍÍÍÍÍÍÍÍÍÍÍÍÍÍÍÍÍÍÍÍÍÍÍÍÍÍÍ¼
♀
ÉÍÍÍÍÍÍÍÍÍÍÍÍÍÍÍÍÍÍÍÍÍÍÍÍÍÍÍÍÍÍÍÍÍÍÍÍÍÍÍÍÍÍÍÍÍ»
º*************************************************º
º*   ECONOLITE CONTROL PRODUCTS, INC.            *º
º*              ASC/2-2000                       *º
```

```
º*          Copyright (C) 1992          *º
º*                                      *º
º* City of Ontario, Traffic Engineering *º
º*  ASC/2-2100  Configuration Ver. 1.1  *º
º*                                      *º
º*   SOFTWARE ASSY             VERSION  *º
º*   BOOT            32783        1.26  *º
º*   MAIN PROGRAM    32787        1.61  *º
º*                                      *º
º*                                      *º
º*                                      *º
º*                                      *º
º**************************************º
ÈÍÍÍÍÍÍÍÍÍÍÍÍÍÍÍÍÍÍÍÍÍÍÍÍÍÍÍÍÍÍÍÍÍÍÍÍÍÍ¼

ÉÍÍÍÍÍÍÍÍÍÍÍÍÍÍÍÍÍÍÍÍÍÍÍÍÍÍÍÍÍÍÍÍÍÍÍÍÍÍ»
º         CONTROLLER TIMING DATA             º
ºPHASE...   1...2...3...4...5...6...7...8º
ºMIN GRN.   0   7   7   7   0   0   0   7º
ºBIKE GRN   0   7   7   7   0   0   0   7º
ºCS MGRN.   0   0   7   0   0   0   0   0º
ºWALK....   0   7   0   0   0   0   0   0º
ºPED CLR.   0  28   0   7   0   7   0   7º
ºVEH EXT. 0.0 2.5 2.5 3.0 0.0 0.0 0.0 3.0º
ºVEH EXT2 0.0 2.0 2.5 3.0 0.0 0.0 0.0 3.0º
ºMAX EXT.   0   5   5  10   0   0   0  10º
ºMAX1....   0  20  20  35   0   0   0  35º
ºMAX2....   0  25  25  45   0   0   0  45º
ºMAX3....   0   0   0   0   0   0   0   0º
º                                         º
ºADDITIONAL SCREEN(S)              MORE->º
ÈÍÍÍÍÍÍÍÍÍÍÍÍÍÍÍÍÍÍÍÍÍÍÍÍÍÍÍÍÍÍÍÍÍÍÍÍÍÍ¼

ÉÍÍÍÍÍÍÍÍÍÍÍÍÍÍÍÍÍÍÍÍÍÍÍÍÍÍÍÍÍÍÍÍÍÍÍÍÍÍ»
º         CONTROLLER TIMING DATA             º
ºPHASE...   1...2...3...4...5...6...7...8º
ºYELLOW.. 3.0 4.0 5.0 5.0 3.0 3.0 3.0 5.0º
ºRED CLR. 0.0 2.0 2.0 2.0 0.0 0.0 0.0 2.0º
ºRED RVT. 0.0 5.0 5.0 5.0 0.0 0.0 0.0 5.0º
º                                         º
ºACT B4..   0   0   0   0   0   0   0   0º
ºSEC/ACT. 0.0 0.0 0.0 0.0 0.0 0.0 0.0 0.0º
ºMAX INI.   0   0   0   0   0   0   0   0º
ºTIME B4.   0   0   0  10   0   0   0  10º
ºCARS WT.   0   0   0   0   0   0   0   0º
ºTTREDUC.   0   0   0  15   0   0   0  15º
ºMIN GAP. 0.0 0.0 0.0 0.0 0.0 0.0 0.0 0.0º
º                                         º
º                                         º
ºEND OF SUBMENU                    MORE->º
ÈÍÍÍÍÍÍÍÍÍÍÍÍÍÍÍÍÍÍÍÍÍÍÍÍÍÍÍÍÍÍÍÍÍÍÍÍÍÍ¼

ÉÍÍÍÍÍÍÍÍÍÍÍÍÍÍÍÍÍÍÍÍÍÍÍÍÍÍÍÍÍÍÍÍÍÍÍÍÍÍ»
º         CONTROLLER TIMING DATA             º
ºPHASE...   9..10..11..12                     º
ºMIN GRN.   0   0   0   0                     º
ºBIKE GRN   0   0   0   0                     º
ºCS MGRN.   0   0   0   0                     º
ºWALK....   0   0   0   0                     º
ºPED CLR.   0   7   0   7                     º
ºVEH EXT. 0.0 0.0 0.0 0.0                     º
ºVEH EXT2 0.0 0.0 0.0 0.0                     º
```

```
ºMAX EXT.   0   0   0   0                 º
ºMAX1....   0   0   0   0                 º
ºMAX2....   0   0   0   0                 º
ºMAX3....   0   0   0   0                 º
ºDET MAX.   0   0   0   0                 º
º                                         º
ºADDITIONAL SCREEN(S)            <-MORE   º
ÈÍÍÍÍÍÍÍÍÍÍÍÍÍÍÍÍÍÍÍÍÍÍÍÍÍÍÍÍÍÍÍÍÍÍÍÍÍÍ¼

ÉÍÍÍÍÍÍÍÍÍÍÍÍÍÍÍÍÍÍÍÍÍÍÍÍÍÍÍÍÍÍÍÍÍÍÍÍÍÍ»
º          CONTROLLER TIMING DATA         º
ºPHASE...   9..10..11..12                 º
ºYELLOW.. 3.0 3.0 3.0 3.0                 º
ºRED CLR. 0.0 0.0 0.0 0.0                 º
ºRED RVT. 0.0 0.0 0.0 0.0                 º
º                                         º
ºACT B4..   0   0   0   0                 º
ºSEC/ACT. 0.0 0.0 0.0 0.0                 º
ºMAX INI.   0   0   0   0                 º
ºTIME B4.   0   0   0   0                 º
ºCARS WT.   0   0   0   0                 º
ºTTREDUC.   0   0   0   0                 º
ºMIN GAP. 0.0 0.0 0.0 0.0                 º
º                                         º
º                                         º
ºEND OF SUBMENU                  <-MORE   º
ÈÍÍÍÍÍÍÍÍÍÍÍÍÍÍÍÍÍÍÍÍÍÍÍÍÍÍÍÍÍÍÍÍÍÍÍÍÍÍ¼

ÉÍÍÍÍÍÍÍÍÍÍÍÍÍÍÍÍÍÍÍÍÍÍÍÍÍÍÍÍÍÍÍÍÍÍÍÍÍÍ»
º         PHASE OVERLAP ASSIGNMENTS       º
ºOVERLAP CONSISTS OF PHASES:        1 1 1º
ºOVLP PHASE       1 2 3 4 5 6 7 8 9 0 1 2º
º     1           X . . . . . . . . . . .º
º     2           . X . . . . . . . . . .º
º     3           . . X . . . . . . . . .º
º     4           . . . X . . . . . . . .º
º     5           . . . . X . . . . . . .º
º     6           . . . . . X . . . . . .º
º     7           . . . . . . X . . . . .º
º     8           . . . . . . . X . . . .º
º     9           . . . . . . . . X . . .º
º    10           . . . . . . . . . X . .º
º    11           . . . . . . . . . . X .º
º    12           . . . . . . . . . . . Xº
ºEND OF SUBMENU                           º
ÈÍÍÍÍÍÍÍÍÍÍÍÍÍÍÍÍÍÍÍÍÍÍÍÍÍÍÍÍÍÍÍÍÍÍÍÍÍÍ¼

ÉÍÍÍÍÍÍÍÍÍÍÍÍÍÍÍÍÍÍÍÍÍÍÍÍÍÍÍÍÍÍÍÍÍÍÍÍÍÍ»
º          PED TIMING CARRYOVER           º
º                                         º
º        PHASE      CARRYOVER PHASE       º
º          1              0               º
º          2              0               º
º          3              0               º
º          4              0               º
º          5              0               º
º          6              0               º
º          7              0               º
º          8              0               º
º          9              0               º
º         10              0               º
º         11              0               º
º         12              0               º
```

```
ºEND OF SUBMENU                                  º
ÈÍÍÍÍÍÍÍÍÍÍÍÍÍÍÍÍÍÍÍÍÍÍÍÍÍÍÍÍÍÍÍÍÍÍÍÍÍÍÍÍÍÍ¼

ÉÍÍÍÍÍÍÍÍÍÍÍÍÍÍÍÍÍÍÍÍÍÍÍÍÍÍÍÍÍÍÍÍÍÍÍÍÍÍÍÍÍÍ»
º         CONTROLLER RECALL DATA                 º
º                                                  º
ºPHASE:                                  1 1 1º
ºPHASE.....  1 2 3 4 5 6 7 8 9 0 1 2º
ºLOCKING MEMORY.  . . . . . . . . . . . .º
ºVEHICLE RECALL.  . . . X . . . X . . . .º
ºPED RECALL.....  . . . . . . . . . . . .º
ºRECALL TO MAX..  . . . . . . . . . . . .º
ºSOFT RECALL....  . . . . . . . . . . . .º
ºDON'T REST HERE  . . . . . . . . . . . .º
ºPED DARK N/CALL  . . . . . . . . . . . .º
º                                                  º
º                                                  º
º                                                  º
º                                                  º
ºEND OF SUBMENU                                  º
ÈÍÍÍÍÍÍÍÍÍÍÍÍÍÍÍÍÍÍÍÍÍÍÍÍÍÍÍÍÍÍÍÍÍÍÍÍÍÍÍÍÍÍ¼

ÉÍÍÍÍÍÍÍÍÍÍÍÍÍÍÍÍÍÍÍÍÍÍÍÍÍÍÍÍÍÍÍÍÍÍÍÍÍÍÍÍÍÍ»
º         CONTROLLER OVERLAP DATA                º
º                                                  º
º                                        1 1 1º
ºOVERLAP A.....   1 2 3 4 5 6 7 8 9 0 1 2º
ºSTANDARD......   . . . . . . . . . . . .º
ºPROTECTED.....   . . . . . . . . . . . .º
ºPERMITTED.....   . . . . . . . . . . . .º
ºENABLE LAG....   . . . . . . . . . . . .º
ºENABLE LEAD...   . . . . . . . . . . . .º
ºSPARE.........   . . . . . . . . . . . .º
º                                                  º
º     ADVANCE GREEN TIMER      0.0         º
º     LAG/LEAD GREEN TIMER     0.0         º
º     LAG/LEAD YELLOW TIMER    0.0         º
º     LAG/LEAD RED TIMER       0.0         º
ºADDITIONAL PAGE(S)                              º
ÈÍÍÍÍÍÍÍÍÍÍÍÍÍÍÍÍÍÍÍÍÍÍÍÍÍÍÍÍÍÍÍÍÍÍÍÍÍÍÍÍÍÍ¼

ÉÍÍÍÍÍÍÍÍÍÍÍÍÍÍÍÍÍÍÍÍÍÍÍÍÍÍÍÍÍÍÍÍÍÍÍÍÍÍÍÍÍÍ»
º         CONTROLLER OVERLAP DATA                º
º                                                  º
º                                        1 1 1º
ºOVERLAP B.....   1 2 3 4 5 6 7 8 9 0 1 2º
ºSTANDARD......   . . . . . . . . . . . .º
ºPROTECTED.....   . . . . . . . . . . . .º
ºPERMITTED.....   . . . . . . . . . . . .º
ºENABLE LAG....   . . . . . . . . . . . .º
ºENABLE LEAD...   . . . . . . . . . . . .º
ºSPARE.........   . . . . . . . . . . . .º
º                                                  º
º     ADVANCE GREEN TIMER      0.0         º
º     LAG/LEAD GREEN TIMER     0.0         º
º     LAG/LEAD YELLOW TIMER    0.0         º
º     LAG/LEAD RED TIMER       0.0         º
ºADDITIONAL PAGE(S)                              º
ÈÍÍÍÍÍÍÍÍÍÍÍÍÍÍÍÍÍÍÍÍÍÍÍÍÍÍÍÍÍÍÍÍÍÍÍÍÍÍÍÍÍÍ¼

ÉÍÍÍÍÍÍÍÍÍÍÍÍÍÍÍÍÍÍÍÍÍÍÍÍÍÍÍÍÍÍÍÍÍÍÍÍÍÍÍÍÍÍ»
º         CONTROLLER OVERLAP DATA                º
º                                                  º
```

```
º                                    1 1 1º
ºOVERLAP C.....   1 2 3 4 5 6 7 8 9 0 1 2º
ºSTANDARD......   . . . . . . . . . . . .º
ºPROTECTED.....   . . . . . . . . . . . .º
ºPERMITTED.....   . . . . . . . . . . . .º
ºENABLE LAG....   . . . . . . . . . . . .º
ºENABLE LEAD...   . . . . . . . . . . . .º
ºSPARE.........   . . . . . . . . . . . .º
º                                         º
º     ADVANCE GREEN TIMER      0.0        º
º     LAG/LEAD GREEN TIMER     0.0        º
º     LAG/LEAD YELLOW TIMER    0.0        º
º     LAG/LEAD RED TIMER       0.0        º
ºADDITIONAL PAGE(S)                       º
ÈÍÍÍÍÍÍÍÍÍÍÍÍÍÍÍÍÍÍÍÍÍÍÍÍÍÍÍÍÍÍÍÍÍÍÍÍÍÍÍÍÍ¼

ÉÍÍÍÍÍÍÍÍÍÍÍÍÍÍÍÍÍÍÍÍÍÍÍÍÍÍÍÍÍÍÍÍÍÍÍÍÍÍÍÍÍ»
º         CONTROLLER OVERLAP DATA         º
º                                         º
º                                    1 1 1º
ºOVERLAP D.....   1 2 3 4 5 6 7 8 9 0 1 2º
ºSTANDARD......   . . X . . . . . . . . .º
ºPROTECTED.....   . . . . . . . . . . . .º
ºPERMITTED.....   . . . . . . . . . . . .º
ºENABLE LAG....   . . . . . . . . . . . .º
ºENABLE LEAD...   . . . . . . . . . . . .º
ºSPARE.........   . . . . . . . . . . . .º
º                                         º
º     ADVANCE GREEN TIMER      0.0        º
º     LAG/LEAD GREEN TIMER     0.0        º
º     LAG/LEAD YELLOW TIMER    0.0        º
º     LAG/LEAD RED TIMER       0.0        º
ºADDITIONAL PAGE(S)                       º
ÈÍÍÍÍÍÍÍÍÍÍÍÍÍÍÍÍÍÍÍÍÍÍÍÍÍÍÍÍÍÍÍÍÍÍÍÍÍÍÍÍÍ¼

♀

ÉÍÍÍÍÍÍÍÍÍÍÍÍÍÍÍÍÍÍÍÍÍÍÍÍÍÍÍÍÍÍÍÍÍÍÍÍÍÍÍÍÍ»
º        PED OVERLAP ASSIGNMENTS          º
ºOVERLAP CONSISTS OF PHASES:         1 1 1º
ºOVLP PHASE       1 2 3 4 5 6 7 8 9 0 1 2º
º     1           . . . . . . . . . . . .º
º     2           . . . . . . . . . . . .º
º     3           . . . . . . . . . . . .º
º     4           . . . . . . . . . . . .º
º     5           . . . . . . . . . . . .º
º     6           . . . . . . . . . . . .º
º     7           . . . . . . . . . . . .º
º     8           . . . . . . . . . . . .º
º     9           . . . . . . . . . . . .º
º    10           . . . . . . . . . . . .º
º    11           . . . . . . . . . . . .º
º    12           . . . . . . . . . . . .º
ºEND OF SUBMENU                           º
ÈÍÍÍÍÍÍÍÍÍÍÍÍÍÍÍÍÍÍÍÍÍÍÍÍÍÍÍÍÍÍÍÍÍÍÍÍÍÍÍÍÍ¼

ÉÍÍÍÍÍÍÍÍÍÍÍÍÍÍÍÍÍÍÍÍÍÍÍÍÍÍÍÍÍÍÍÍÍÍÍÍÍÍÍÍÍ»
º       CONTROLLER START/FLASH DATA       º
º                                    1 1 1º
ºPHASE.........   1 2 3 4 5 6 7 8 9 0 1 2º
ºPOWER START....  . X . . . . . . . . . .º
ºEXTERNAL START.  . X . . . . . . . . . .º
ºENTRY REM FLASH  . . . X . . . X . . . .º
ºEXIT REM FLASH.  . X . . . . . . . . . .º
ºREM FLASH YEL..  . . . . . . . . . . . .º
```

```
ºFL TOGETHER PHS  . X . X . . . X . . . .º
ºFL TOGETHER OVLPS A: .  B: .  C: .  D: .º
º                                         º
ºPOWER START..............   YELLOW     º
ºEXTERNAL START...........   YELLOW     º
ºPOWER START ALL RED TIME..  0 SECONDS  º
ºPOWER START FLASH TIME....  0 SECONDS  º
ºADDITIONAL PAGE(S)                       º
ÈÍÍÍÍÍÍÍÍÍÍÍÍÍÍÍÍÍÍÍÍÍÍÍÍÍÍÍÍÍÍÍÍÍÍÍÍÍÍÍÍÍ¼

ÉÍÍÍÍÍÍÍÍÍÍÍÍÍÍÍÍÍÍÍÍÍÍÍÍÍÍÍÍÍÍÍÍÍÍÍÍÍÍÍÍÍ»
º       CONTROLLER START/FLASH DATA       º
º                                         º
ºREMOTE FLASH OPTIONS:                    º
º                                         º
ºOUT OF FLASH YELLOW......... X           º
ºOUT OF FLASH ALL RED........ .           º
ºMINIMUM RECALL.............. .           º
ºSPARE....................... .           º
ºFLASH THRU LOAD SWITCHES.... .           º
ºCYCLE THROUGH PHASES........ .           º
º                                         º
º                                         º
º                                         º
º                                         º
º                                         º
ºEND OF SUBMENU                           º
ÈÍÍÍÍÍÍÍÍÍÍÍÍÍÍÍÍÍÍÍÍÍÍÍÍÍÍÍÍÍÍÍÍÍÍÍÍÍÍÍÍÍ¼

ÉÍÍÍÍÍÍÍÍÍÍÍÍÍÍÍÍÍÍÍÍÍÍÍÍÍÍÍÍÍÍÍÍÍÍÍÍÍÍÍÍÍ»
º            NO SERVE PHASES              º
ºCANNOT SERVE WITH: 1 1 1                 º
ºPHASE              2 1 0 9 8 7 6 5 4 3 2º
º  1                . . . . . . . . . . .º
º  2                . . . . . . . . . .  º
º  3                . . . . . . . . .    º
º  4                . . . . . . . .      º
º  5                . . . . . . .        º
º  6                . . . . . .          º
º  7                . . . . .            º
º  8                . . . .              º
º  9                . . .                º
º 10                . .                  º
º 11                .                    º
º                                         º
ºEND OF SUBMENU                           º
ÈÍÍÍÍÍÍÍÍÍÍÍÍÍÍÍÍÍÍÍÍÍÍÍÍÍÍÍÍÍÍÍÍÍÍÍÍÍÍÍÍÍ¼

ÉÍÍÍÍÍÍÍÍÍÍÍÍÍÍÍÍÍÍÍÍÍÍÍÍÍÍÍÍÍÍÍÍÍÍÍÍÍÍÍÍÍ»
º                DIMMING                  º
º                                         º
ºLOAD SWITCH....  1..2..3..4..5..6..7..8 º
ºDIM GRN/WLK....  .  .  .  .  .  .  .  . º
ºDIM YEL/PC.....  .  .  .  .  .  .  .  . º
ºDIM RED/DW.....  .  .  .  .  .  .  .  . º
º                                         º
ºLOAD SWITCH....  9.10.11.12.13.14.15.16 º
ºDIM GRN/WLK....  .  .  .  .  .  .  .  . º
ºDIM YEL/PC.....  .  .  .  .  .  .  .  . º
ºDIM RED/DW.....  .  .  .  .  .  .  .  . º
º                                         º
º                                         º
º                                         º
```

```
º                                                                    º
ºEND OF SUBMENU                                                      º
ÈÍÍÍÍÍÍÍÍÍÍÍÍÍÍÍÍÍÍÍÍÍÍÍÍÍÍÍÍÍÍÍÍÍÍÍÍÍÍÍÍÍÍÍÍÍÍÍÍÍÍÍÍÍÍÍÍÍÍ¼

ÉÍÍÍÍÍÍÍÍÍÍÍÍÍÍÍÍÍÍÍÍÍÍÍÍÍÍÍÍÍÍÍÍÍÍÍÍÍÍÍÍÍÍÍÍÍÍÍÍÍÍÍÍÍÍÍÍÍÍ»
º         CONTROLLER OPTION DATA                                     º
º                                                        1 1 1       º
ºPHASE.....  1 2 3 4 5 6 7 8 9 0 1 2                                  º
ºGUAR PASSAGE...  . . . . . . . . . . . .                            º
ºNONACTUATED I..  . . . X . . . X . . . .                            º
ºNONACTUATED II.  . X . . . . . . . . . .                            º
ºDUAL ENTRY.....  . . . . . . . . . . . .                            º
ºCOND SERVICE...  . . . . . . . . . . . .                            º
ºCOND RESERVICE.  . . . . . . . . . . . .                            º
ºREST IN WALK...  . . . . . . . . . . . .                            º
ºFLASHING WALK..  . . . . . . . . . . . .                            º
º                                                                    º
º----- FIVE SECTION LEFT TURN HEADS -----                           º
º   5-2 :  .     7-4 :  .     1-6 :  .                              º
º   3-8 :  .    11-10:  .    9-12 :  .                              º
ºADDITIONAL PAGE(S)                                                  º
ÈÍÍÍÍÍÍÍÍÍÍÍÍÍÍÍÍÍÍÍÍÍÍÍÍÍÍÍÍÍÍÍÍÍÍÍÍÍÍÍÍÍÍÍÍÍÍÍÍÍÍÍÍÍÍÍÍÍÍ¼
♀
ÉÍÍÍÍÍÍÍÍÍÍÍÍÍÍÍÍÍÍÍÍÍÍÍÍÍÍÍÍÍÍÍÍÍÍÍÍÍÍÍÍÍÍÍÍÍÍÍÍÍÍÍÍÍÍÍÍÍÍ»
º         CONTROLLER OPTION DATA                                     º
ºDUAL ENTRY..................... OFF                                 º
ºCOND SERVICE ENABLE............ OFF                                 º
ºCOND SERVICE DET X SWITCHING.... OFF                                º
ºPED CLR PROTECT................ OFF                                 º
ºSPEC PREEMPT OVLP FLASH........ OFF                                 º
ºLOCK DETECTORS IN RED ONLY..... OFF                                 º
ºRESERVED....................... OFF                                 º
ºRESERVED....................... OFF                                 º
ºBACKUP PROTECTION GROUP 1...... OFF                                 º
ºBACKUP PROTECTION GROUP 2...... OFF                                 º
ºBACKUP PROTECTION GROUP 3...... OFF                                 º
ºSIMULTANEOUS GAP GROUP 1....... OFF                                 º
ºSIMULTANEOUS GAP GROUP 2....... OFF                                 º
ºSIMULTANEOUS GAP GROUP 3....... OFF                                 º
ºEND OF SUBMENU                                                      º
ÈÍÍÍÍÍÍÍÍÍÍÍÍÍÍÍÍÍÍÍÍÍÍÍÍÍÍÍÍÍÍÍÍÍÍÍÍÍÍÍÍÍÍÍÍÍÍÍÍÍÍÍÍÍÍÍÍÍÍ¼
♀
ÉÍÍÍÍÍÍÍÍÍÍÍÍÍÍÍÍÍÍÍÍÍÍÍÍÍÍÍÍÍÍÍÍÍÍÍÍÍÍÍÍÍÍÍÍÍÍÍÍÍÍÍÍÍÍÍÍÍÍ»
º*****************************************º
º*   ECONOLITE CONTROL PRODUCTS, INC.    *º
º*            ASC/2-2000                 *º
º*          Copyright (C) 1992           *º
º*                                       *º
º* City of Ontario, Traffic Engineering *º
º*  ASC/2-2100  Configuration Ver. 1.1   *º
º*                                       *º
º*   SOFTWARE ASSY             VERSION   *º
º*   BOOT            32783        1.26   *º
º*   MAIN PROGRAM    32787        1.61   *º
º*                                       *º
º*                                       *º
º*                                       *º
º*                                       *º
º*****************************************º
ÈÍÍÍÍÍÍÍÍÍÍÍÍÍÍÍÍÍÍÍÍÍÍÍÍÍÍÍÍÍÍÍÍÍÍÍÍÍÍÍÍÍÍÍÍÍÍÍÍÍÍÍÍÍÍÍÍÍÍ¼

ÉÍÍÍÍÍÍÍÍÍÍÍÍÍÍÍÍÍÍÍÍÍÍÍÍÍÍÍÍÍÍÍÍÍÍÍÍÍÍÍÍÍÍÍÍÍÍÍÍÍÍÍÍÍÍÍÍÍÍ»
º          COORDINATOR OPTIONS                                       º
```

```
º                                                  º
ºSPLIT UNITS..    %    ACT CRD PHASE..  Xº
ºOFFSET UNITS.    %    ACT WALK/REST..  .º
ºINTERCNT FMT.  STD    INHIBIT MAX....  Xº
ºINTERCNT SRC.  NIC    MAX2 SELECT....  .º
ºRESYNC COUNT.    0    MULTISYNC......  .º
ºTRANSITION...  SMOOTH FLOAT FORCE OFF  .º
ºDWELL PERIOD.    0%                     º
º                                        º
º                                        º
º                            A B C D E F º
ºFREE ALTERNATE SEQUENCE     . . . . . . º
º                                        º
º                                        º
ºEND OF SUBMENU                          º
ÈÍÍÍÍÍÍÍÍÍÍÍÍÍÍÍÍÍÍÍÍÍÍÍÍÍÍÍÍÍÍÍÍÍÍÍÍÍÍÍÍÍÍ¼

ÉÍÍÍÍÍÍÍÍÍÍÍÍÍÍÍÍÍÍÍÍÍÍÍÍÍÍÍÍÍÍÍÍÍÍÍÍÍÍÍÍÍÍ»
º      COORD MANUAL AND SPLIT DEMAND     º
º                                        º
ºMANUAL ENABLE:  ON    MANUAL PATTERN   0º
º                                        º
º----------------------------------------º
º                                        º
ºSPLIT DEMAND:        DEMAND 1  DEMAND 2 º
ºDEMAND CALL TIME        0s        0s    º
ºDEMAND CYCLE COUNT      0         0     º
º                                        º
º                                  1 1 1º
ºDEMAND PHASE:    1 2 3 4 5 6 7 8 9 0 1 2º
ºDEMAND 1 PHASES  . . . . . . . . . . . .º
ºDEMAND 2 PHASES  . . . . . . . . . . . .º
º                                        º
ºEND OF SUBMENU                          º
ÈÍÍÍÍÍÍÍÍÍÍÍÍÍÍÍÍÍÍÍÍÍÍÍÍÍÍÍÍÍÍÍÍÍÍÍÍÍÍÍÍÍÍ¼

ÉÍÍÍÍÍÍÍÍÍÍÍÍÍÍÍÍÍÍÍÍÍÍÍÍÍÍÍÍÍÍÍÍÍÍÍÍÍÍÍÍÍÍ»
º        COORD AUTO PERM MIN GREEN       º
º                                        º
º        PHASE   AUTO PERM MIN GRN       º
º          1              0s             º
º          2              0s             º
º          3              0s             º
º          4              0s             º
º          5              0s             º
º          6              0s             º
º          7              0s             º
º          8              0s             º
º          9              0s             º
º         10              0s             º
º         11              0s             º
º         12              0s             º
ºEND OF SUBMENU                          º
ÈÍÍÍÍÍÍÍÍÍÍÍÍÍÍÍÍÍÍÍÍÍÍÍÍÍÍÍÍÍÍÍÍÍÍÍÍÍÍÍÍÍÍ¼

ÉÍÍÍÍÍÍÍÍÍÍÍÍÍÍÍÍÍÍÍÍÍÍÍÍÍÍÍÍÍÍÍÍÍÍÍÍÍÍÍÍÍÍ»
ºCOORD PATTERN 31                        º
º                                        º
ºCYCLE LENGTH..... 100s  C/O/S.....  411 º
ºOFFSET.....  27%                        º
ºSPLITS:                                 º
ºPHASE  1)  0%   2) 31%   3) 23%   4) 46%º
ºPHASE  5)  0%   6)  0%   7)  0%   8) 69%º
```

```
ºPHASE  9)  0%  10)  0%  11)  0%  12)  0%º
º                                         º
ºVEH PERMISSIVE.......  [1]   0% [2]   0%º
ºVEH PERM 2 DISP.....   0%                º
ºPHASE RESERVICE.....   .                 º
ºSPLIT EXTENSION/RING.  [1]   0% [2]   0%º
ºSPL DMD PATTERN......  [1]   0  [2]   0 º
ºXARTERY PATTERN.....   0                 º
ºADDITIONAL SCREEN(S)                     º
ÈÍÍÍÍÍÍÍÍÍÍÍÍÍÍÍÍÍÍÍÍÍÍÍÍÍÍÍÍÍÍÍÍÍÍÍÍÍÍ¼

ÉÍÍÍÍÍÍÍÍÍÍÍÍÍÍÍÍÍÍÍÍÍÍÍÍÍÍÍÍÍÍÍÍÍÍÍÍÍÍ»
º                                 1 1 1º
ºPHASE            1 2 3 4 5 6 7 8 9 0 1 2º
ºCOORD PHASES     . . . X . . . X . . . .º
ºVEHICLE RECALL   . . . . . . . . . . . .º
ºVEH MAX RECALL   . . . . . . . . . . . .º
ºPED RECALL       . . . . . . . . . . . .º
ºPHASE OMIT       . . . . . . . . . . . .º
ºSPARE            . . . . . . . . . . . .º
º                                         º
º                 A B C D E F             º
ºALT SEQUENCE:    . . . . . .             º
º                                         º
º                                         º
º                                         º
º                                         º
ºADDITIONAL SCREEN(S)                     º
ÈÍÍÍÍÍÍÍÍÍÍÍÍÍÍÍÍÍÍÍÍÍÍÍÍÍÍÍÍÍÍÍÍÍÍÍÍÍÍ¼

ÉÍÍÍÍÍÍÍÍÍÍÍÍÍÍÍÍÍÍÍÍÍÍÍÍÍÍÍÍÍÍÍÍÍÍÍÍÍÍ»
ºCOORD PATTERN 33                         º
º                                         º
ºCYCLE LENGTH..... 100s  C/O/S.....  611 º
ºOFFSET.....  34%                         º
ºSPLITS:                                  º
ºPHASE  1)  0%   2) 29%   3) 25%   4) 46%º
ºPHASE  5)  0%   6)  0%   7)  0%   8) 71%º
ºPHASE  9)  0%  10)  0%  11)  0%  12)  0%º
º                                         º
ºVEH PERMISSIVE.......  [1]   0% [2]   0%º
ºVEH PERM 2 DISP.....   0%                º
ºPHASE RESERVICE.....   .                 º
ºSPLIT EXTENSION/RING.  [1]   0% [2]   0%º
ºSPL DMD PATTERN......  [1]   0  [2]   0 º
ºXARTERY PATTERN.....   0                 º
ºADDITIONAL SCREEN(S)                     º
ÈÍÍÍÍÍÍÍÍÍÍÍÍÍÍÍÍÍÍÍÍÍÍÍÍÍÍÍÍÍÍÍÍÍÍÍÍÍÍ¼

ÉÍÍÍÍÍÍÍÍÍÍÍÍÍÍÍÍÍÍÍÍÍÍÍÍÍÍÍÍÍÍÍÍÍÍÍÍÍÍ»
º                                 1 1 1º
ºPHASE            1 2 3 4 5 6 7 8 9 0 1 2º
ºCOORD PHASES     . . . X . . . X . . . .º
ºVEHICLE RECALL   . . . . . . . . . . . .º
ºVEH MAX RECALL   . . . . . . . . . . . .º
ºPED RECALL       . . . . . . . . . . . .º
ºPHASE OMIT       . . . . . . . . . . . .º
ºSPARE            . . . . . . . . . . . .º
º                                         º
º                 A B C D E F             º
ºALT SEQUENCE:    . . . . . .             º
º                                         º
º                                         º
```

```
º                                                    º
º                                                    º
ºADDITIONAL SCREEN(S)                                º
ÈÍÍÍÍÍÍÍÍÍÍÍÍÍÍÍÍÍÍÍÍÍÍÍÍÍÍÍÍÍÍÍÍÍÍÍÍÍÍÍÍÍÍÍÍ¼

ÉÍÍÍÍÍÍÍÍÍÍÍÍÍÍÍÍÍÍÍÍÍÍÍÍÍÍÍÍÍÍÍÍÍÍÍÍÍÍÍÍÍÍÍÍ»
ºCOORD PATTERN 51                                    º
º                                                    º
ºCYCLE LENGTH..... 100s  C/O/S.....  411 º
ºOFFSET...........  27%                              º
ºSPLITS:                                             º
ºPHASE  1)  0%   2) 31%   3) 23%   4) 46%º
ºPHASE  5)  0%   6)  0%   7)  0%   8) 69%º
ºPHASE  9)  0%  10)  0%  11)  0%  12)  0%º
º                                                    º
ºVEH PERMISSIVE.......  [1]   0% [2]   0%º
ºVEH PERM 2 DISP...........   0%                     º
ºPHASE RESERVICE...........   .                      º
ºSPLIT EXTENSION/RING.  [1]   0% [2]   0%º
ºSPL DMD PATTERN......  [1]   0  [2]   0 º
ºXARTERY PATTERN...........   0                      º
ºADDITIONAL SCREEN(S)                                º
ÈÍÍÍÍÍÍÍÍÍÍÍÍÍÍÍÍÍÍÍÍÍÍÍÍÍÍÍÍÍÍÍÍÍÍÍÍÍÍÍÍÍÍÍÍ¼

ÉÍÍÍÍÍÍÍÍÍÍÍÍÍÍÍÍÍÍÍÍÍÍÍÍÍÍÍÍÍÍÍÍÍÍÍÍÍÍÍÍÍÍÍÍ»
º                                      1 1 1º
ºPHASE            1 2 3 4 5 6 7 8 9 0 1 2º
ºCOORD PHASES     . . . X . . . X . . . .º
ºVEHICLE RECALL   . . . . . . . . . . . .º
ºVEH MAX RECALL   . . . . . . . . . . . .º
ºPED RECALL       . . . . . . . . . . . .º
ºPHASE OMIT       . . . . . . . . . . . .º
ºSPARE            . . . . . . . . . . . .º
º                                                    º
º                 A B C D E F                        º
ºALT SEQUENCE:    . . . . . .                        º
º                                                    º
º                                                    º
º                                                    º
º                                                    º
ºADDITIONAL SCREEN(S)                                º
ÈÍÍÍÍÍÍÍÍÍÍÍÍÍÍÍÍÍÍÍÍÍÍÍÍÍÍÍÍÍÍÍÍÍÍÍÍÍÍÍÍÍÍÍÍ¼

ÉÍÍÍÍÍÍÍÍÍÍÍÍÍÍÍÍÍÍÍÍÍÍÍÍÍÍÍÍÍÍÍÍÍÍÍÍÍÍÍÍÍÍÍÍ»
ºCOORD PATTERN 53                                    º
º                                                    º
ºCYCLE LENGTH..... 100s  C/O/S.....  611 º
ºOFFSET...........  38%                              º
ºSPLITS:                                             º
ºPHASE  1)  0%   2) 29%   3) 25%   4) 46%º
ºPHASE  5)  0%   6)  0%   7)  0%   8) 71%º
ºPHASE  9)  0%  10)  0%  11)  0%  12)  0%º
º                                                    º
ºVEH PERMISSIVE.......  [1]   0% [2]   0%º
ºVEH PERM 2 DISP...........   0%                     º
ºPHASE RESERVICE...........   .                      º
ºSPLIT EXTENSION/RING.  [1]   0% [2]   0%º
ºSPL DMD PATTERN......  [1]   0  [2]   0 º
ºXARTERY PATTERN...........   0                      º
ºADDITIONAL SCREEN(S)                                º
ÈÍÍÍÍÍÍÍÍÍÍÍÍÍÍÍÍÍÍÍÍÍÍÍÍÍÍÍÍÍÍÍÍÍÍÍÍÍÍÍÍÍÍÍÍ¼

ÉÍÍÍÍÍÍÍÍÍÍÍÍÍÍÍÍÍÍÍÍÍÍÍÍÍÍÍÍÍÍÍÍÍÍÍÍÍÍÍÍÍÍÍÍ»
```

```
º                                    1 1 1º
ºPHASE            1 2 3 4 5 6 7 8 9 0 1 2º
ºCOORD PHASES     . . . X . . . X . . . .º
ºVEHICLE RECALL   . . . . . . . . . . . .º
ºVEH MAX RECALL   . . . . . . . . . . . .º
ºPED RECALL       . . . . . . . . . . . .º
ºPHASE OMIT       . . . . . . . . . . . .º
ºSPARE            . . . . . . . . . . . .º
º                                        º
º                 A B C D E F            º
ºALT SEQUENCE:    . . . . . .            º
º                                        º
º                                        º
º                                        º
º                                        º
ºADDITIONAL SCREEN(S)                    º
ÈÍÍÍÍÍÍÍÍÍÍÍÍÍÍÍÍÍÍÍÍÍÍÍÍÍÍÍÍÍÍÍÍÍÍÍÍÍÍÍÍÍ¼

ÉÍÍÍÍÍÍÍÍÍÍÍÍÍÍÍÍÍÍÍÍÍÍÍÍÍÍÍÍÍÍÍÍÍÍÍÍÍÍÍÍÍ»
º****************************************º
º*   ECONOLITE CONTROL PRODUCTS, INC.   *º
º*            ASC/2-2000                *º
º*          Copyright (C) 1992          *º
º*                                      *º
º* City of Ontario, Traffic Engineering *º
º*  ASC/2-2100  Configuration Ver. 1.1  *º
º*                                      *º
º*   SOFTWARE ASSY             VERSION  *º
º*   BOOT            32783        1.26  *º
º*   MAIN PROGRAM    32787        1.61  *º
º*                                      *º
º*                                      *º
º*                                      *º
º*                                      *º
º****************************************º
ÈÍÍÍÍÍÍÍÍÍÍÍÍÍÍÍÍÍÍÍÍÍÍÍÍÍÍÍÍÍÍÍÍÍÍÍÍÍÍÍÍÍ¼

ÉÍÍÍÍÍÍÍÍÍÍÍÍÍÍÍÍÍÍÍÍÍÍÍÍÍÍÍÍÍÍÍÍÍÍÍÍÍÍÍÍÍ»
ºPRIORITY PREEMPTOR 1                1 1 1º
ºPHASE.........  1 2 3 4 5 6 7 8 9 0 1 2º
ºTERM PHASE OVLP  . . . . . . . . . . . .º
ºTRK CLR PHASE..  . . . . . . . . . . . .º
ºHOLD PHASES....  . . . . . . . . . . . .º
ºEXIT PHASES....  . . . . . . . . . . . .º
ºEXIT CALLS.....  . . . . . . . . . . . .º
ºSPARE.........  . . . . . . . . . . . .º
ºTERM OVERLAP...   A: .  B: .  C: .  D: .º
º                                        º
ºACTIVE......... NO  PED DARK....... NO  º
ºPRIORITY....... NO  PED ACTIVE..... NO  º
ºDET LOCK....... NO  ZERO PC TIME... NO  º
ºHOLD FLASH..... NO  PC THRU YELLOW. NO  º
ºTERM OVLP ASAP. NO  TERM PHASES.... NO  º
ºADDITIONAL PAGE(S)                      º
ÈÍÍÍÍÍÍÍÍÍÍÍÍÍÍÍÍÍÍÍÍÍÍÍÍÍÍÍÍÍÍÍÍÍÍÍÍÍÍÍÍÍ¼

ÉÍÍÍÍÍÍÍÍÍÍÍÍÍÍÍÍÍÍÍÍÍÍÍÍÍÍÍÍÍÍÍÍÍÍÍÍÍÍÍÍÍ»
º          PRIORITY PREEMPTOR 1          º
º                                        º
ºDON'T OVERRIDE FLASH.....  .            º
ºFLASH ALL OUTPUTS........  .            º
ºYELLOW-RED GOES GREEN....  .            º
ºENABLE MAX PREEMPT TIME..  .            º
```

```
ºACTIVE ONLY DURING HOLD..  .            º
ºNO CVM IN FLASH..........  .            º
ºFAST FLASH GRN ON HOLD...  .            º
ºOUT OF FLASH.............  GREEN        º
º                                        º
º                                        º
º                                        º
º                                        º
º                                        º
ºADDITIONAL PAGE(S)                      º
ÈÍÍÍÍÍÍÍÍÍÍÍÍÍÍÍÍÍÍÍÍÍÍÍÍÍÍÍÍÍÍÍÍÍÍÍÍÍÍ¼

ÉÍÍÍÍÍÍÍÍÍÍÍÍÍÍÍÍÍÍÍÍÍÍÍÍÍÍÍÍÍÍÍÍÍÍÍÍÍÍ»
º          PRIORITY PREEMPTOR 1          º
º                                        º
ºMAX TIME......  0  DURATION TIME..  0    º
ºMIN HOLD TIME.  0  DELAY TIME.....  0    º
ºMIN PED CLEAR.  0  INHIBIT TIME...  0    º
ºEXIT MAX......  0  HLD DELAY TIME.  0    º
º                                        º
º                GRN  YEL  RED           º
ºMINIMUM.......    0  0.0  0.0           º
ºTRACK CLEAR...    0  0.0  0.0           º
ºHOLD..........       0.0  0.0           º
º                                        º
º                                        º
º                                        º
º                                        º
ºEND OF SUBMENU                          º
ÈÍÍÍÍÍÍÍÍÍÍÍÍÍÍÍÍÍÍÍÍÍÍÍÍÍÍÍÍÍÍÍÍÍÍÍÍÍÍ¼

ÉÍÍÍÍÍÍÍÍÍÍÍÍÍÍÍÍÍÍÍÍÍÍÍÍÍÍÍÍÍÍÍÍÍÍÍÍÍÍ»
ºPRIORITY PREEMPTOR 2              1 1 1º
ºPHASE.........  1 2 3 4 5 6 7 8 9 0 1 2º
ºTERM PHASE OVLP  . . . . . . . . . . . .º
ºTRK CLR PHASE..  . . . . . . . . . . . .º
ºHOLD PHASES....  . . . . . . . . . . . .º
ºEXIT PHASES....  . . . . . . . . . . . .º
ºEXIT CALLS.....  . . . . . . . . . . . .º
ºSPARE..........  . . . . . . . . . . . .º
ºTERM OVERLAP...   A: .  B: .  C: .  D: .º
º                                        º
ºACTIVE......... NO  PED DARK....... NO  º
ºPRIORITY....... NO  PED ACTIVE..... NO  º
ºDET LOCK....... NO  ZERO PC TIME... NO  º
ºHOLD FLASH..... NO  PC THRU YELLOW. NO  º
ºTERM OVLP ASAP. NO  TERM PHASES.... NO  º
ºADDITIONAL PAGE(S)                      º
ÈÍÍÍÍÍÍÍÍÍÍÍÍÍÍÍÍÍÍÍÍÍÍÍÍÍÍÍÍÍÍÍÍÍÍÍÍÍÍ¼

ÉÍÍÍÍÍÍÍÍÍÍÍÍÍÍÍÍÍÍÍÍÍÍÍÍÍÍÍÍÍÍÍÍÍÍÍÍÍÍ»
º          PRIORITY PREEMPTOR 2          º
º                                        º
ºDON'T OVERRIDE FLASH.....  X            º
ºFLASH ALL OUTPUTS........  .            º
ºYELLOW-RED GOES GREEN....  .            º
ºENABLE MAX PREEMPT TIME..  .            º
ºACTIVE ONLY DURING HOLD..  .            º
ºNO CVM IN FLASH..........  .            º
ºFAST FLASH GRN ON HOLD...  X            º
ºOUT OF FLASH.............  GREEN        º
º                                        º
º                                        º
```

```
º                                          º
º                                          º
º                                          º
ºADDITIONAL PAGE(S)                        º
ÈÍÍÍÍÍÍÍÍÍÍÍÍÍÍÍÍÍÍÍÍÍÍÍÍÍÍÍÍÍÍÍÍÍÍÍÍÍÍ¼

ÉÍÍÍÍÍÍÍÍÍÍÍÍÍÍÍÍÍÍÍÍÍÍÍÍÍÍÍÍÍÍÍÍÍÍÍÍÍÍ»
º          PRIORITY PREEMPTOR 2            º
º                                          º
ºMAX TIME..... 15  DURATION TIME..  0      º
ºMIN HOLD TIME.  0  DELAY TIME.....  0      º
ºMIN PED CLEAR.  0  INHIBIT TIME...  0      º
ºEXIT MAX......  0  HLD DELAY TIME.  0      º
º                                          º
º                GRN  YEL  RED             º
ºMINIMUM.......    0  0.0  0.0             º
ºTRACK CLEAR...    0  0.0  0.0             º
ºHOLD..........       0.0  0.0             º
º                                          º
ºLINKED PREEMPTOR.....  0                  º
º                                          º
º                                          º
ºEND OF SUBMENU                            º
ÈÍÍÍÍÍÍÍÍÍÍÍÍÍÍÍÍÍÍÍÍÍÍÍÍÍÍÍÍÍÍÍÍÍÍÍÍÍÍ¼

ÉÍÍÍÍÍÍÍÍÍÍÍÍÍÍÍÍÍÍÍÍÍÍÍÍÍÍÍÍÍÍÍÍÍÍÍÍÍÍ»
ºPRIORITY PREEMPTOR 3                1 1 1º
ºPHASE.........  1 2 3 4 5 6 7 8 9 0 1 2º
ºTERM PHASE OVLP  . . . . . . . . . . . .º
ºTRK CLR PHASE..  . . . . . . . . . . . .º
ºHOLD PHASES....  . X . . . . . . . . . .º
ºEXIT PHASES....  . . . . . . . . . . . .º
ºEXIT CALLS.....  . . . . . . . . . . . .º
ºSPARE..........  . . . . . . . . . . . .º
ºTERM OVERLAP...   A: .  B: .  C: .  D: .º
º                                          º
ºACTIVE.........YES  PED DARK....... NO    º
ºPRIORITY....... NO  PED ACTIVE..... NO    º
ºDET LOCK....... NO  ZERO PC TIME... NO    º
ºHOLD FLASH..... NO  PC THRU YELLOW. NO    º
ºTERM OVLP ASAP. NO  TERM PHASES.... NO    º
ºADDITIONAL PAGE(S)                        º
ÈÍÍÍÍÍÍÍÍÍÍÍÍÍÍÍÍÍÍÍÍÍÍÍÍÍÍÍÍÍÍÍÍÍÍÍÍÍÍ¼

ÉÍÍÍÍÍÍÍÍÍÍÍÍÍÍÍÍÍÍÍÍÍÍÍÍÍÍÍÍÍÍÍÍÍÍÍÍÍÍ»
º          PRIORITY PREEMPTOR 3            º
º                                          º
ºDON'T OVERRIDE FLASH.....  X              º
ºFLASH ALL OUTPUTS........  .              º
ºYELLOW-RED GOES GREEN....  .              º
ºENABLE MAX PREEMPT TIME..  X              º
ºACTIVE ONLY DURING HOLD..  .              º
ºNO CVM IN FLASH..........  .              º
ºFAST FLASH GRN ON HOLD...  .              º
ºOUT OF FLASH.............  GREEN          º
º                                          º
º                                          º
º                                          º
º                                          º
º                                          º
ºADDITIONAL PAGE(S)                        º
ÈÍÍÍÍÍÍÍÍÍÍÍÍÍÍÍÍÍÍÍÍÍÍÍÍÍÍÍÍÍÍÍÍÍÍÍÍÍÍ¼
```

```
É͸͸͸͸͸͸͸͸͸͸͸͸͸͸͸͸͸͸͸͸͸͸͸͸͸͸͸͸͸͸͸͸͸͸͸͸͸͸͸͸͸͸»
º          PRIORITY PREEMPTOR 3                                 º
º                                                               º
ºMAX TIME...... 90  DURATION TIME..  0                          º
ºMIN HOLD TIME.  0  DELAY TIME.....  0                          º
ºMIN PED CLEAR.  5  INHIBIT TIME...  0                          º
ºEXIT MAX......  0  HLD DELAY TIME.  0                          º
º                                                               º
º                GRN  YEL  RED                                  º
ºMINIMUM.......    0  0.0  0.0                                  º
ºTRACK CLEAR...    0  0.0  0.0                                  º
ºHOLD..........       0.0  0.0                                  º
º                                                               º
ºLINKED PREEMPTOR.....  0                                       º
º                                                               º
º                                                               º
ºEND OF SUBMENU                                                 º
È͸͸͸͸͸͸͸͸͸͸͸͸͸͸͸͸͸͸͸͸͸͸͸͸͸͸͸͸͸͸͸͸͸͸͸͸͸͸͸͸͸͸¼

É͸͸͸͸͸͸͸͸͸͸͸͸͸͸͸͸͸͸͸͸͸͸͸͸͸͸͸͸͸͸͸͸͸͸͸͸͸͸͸͸͸͸»
º          PRIORITY PREEMPTOR 4     1 1 1º
ºPHASE.....  1 2 3 4 5 6 7 8 9 0 1 2º
ºTERM PHASE OVLP  . . . . . . . . . . . .º
ºTRK CLR PHASE..  . . . . . . . . . . . .º
ºHOLD PHASES....  . . . . . . . . . . . .º
ºEXIT PHASES....  . . . . . . . . . . . .º
ºEXIT CALLS.....  . . . . . . . . . . . .º
ºSPARE..........  . . . . . . . . . . . .º
ºTERM OVERLAP...   A: .  B: .  C: .  D: .º
º                                                               º
ºACTIVE......... NO  PED DARK....... NO                         º
ºPRIORITY....... NO  PED ACTIVE..... NO                         º
ºDET LOCK....... NO  ZERO PC TIME... NO                         º
ºHOLD FLASH..... NO  PC THRU YELLOW. NO                         º
ºTERM OVLP ASAP. NO  TERM PHASES.... NO                         º
ºADDITIONAL PAGE(S)                                             º
È͸͸͸͸͸͸͸͸͸͸͸͸͸͸͸͸͸͸͸͸͸͸͸͸͸͸͸͸͸͸͸͸͸͸͸͸͸͸͸͸͸͸¼

É͸͸͸͸͸͸͸͸͸͸͸͸͸͸͸͸͸͸͸͸͸͸͸͸͸͸͸͸͸͸͸͸͸͸͸͸͸͸͸͸͸͸»
º          PRIORITY PREEMPTOR 4                                 º
º                                                               º
ºDON'T OVERRIDE FLASH.....  .                                   º
ºFLASH ALL OUTPUTS........  .                                   º
ºYELLOW-RED GOES GREEN....  .                                   º
ºENABLE MAX PREEMPT TIME..  .                                   º
ºACTIVE ONLY DURING HOLD..  .                                   º
ºNO CVM IN FLASH..........  .                                   º
ºFAST FLASH GRN ON HOLD...  .                                   º
ºOUT OF FLASH.............  GREEN                               º
º                                                               º
º                                                               º
º                                                               º
º                                                               º
º                                                               º
ºADDITIONAL PAGE(S)                                             º
È͸͸͸͸͸͸͸͸͸͸͸͸͸͸͸͸͸͸͸͸͸͸͸͸͸͸͸͸͸͸͸͸͸͸͸͸͸͸͸͸͸͸¼

♀

É͸͸͸͸͸͸͸͸͸͸͸͸͸͸͸͸͸͸͸͸͸͸͸͸͸͸͸͸͸͸͸͸͸͸͸͸͸͸͸͸͸͸»
º          PRIORITY PREEMPTOR 4                                 º
º                                                               º
ºMAX TIME......  0  DURATION TIME..  0                          º
ºMIN HOLD TIME.  0  DELAY TIME.....  0                          º
ºMIN PED CLEAR.  0  INHIBIT TIME...  0                          º
```

```
ºEXIT MAX......  0  HLD DELAY TIME.  0   º
º                                        º
º                GRN  YEL  RED           º
ºMINIMUM.......    0  0.0  0.0           º
ºTRACK CLEAR...    0  0.0  0.0           º
ºHOLD..........       0.0  0.0           º
º                                        º
ºLINKED PREEMPTOR.....  0                º
º                                        º
º                                        º
ºEND OF SUBMENU                          º
ÈÍÍÍÍÍÍÍÍÍÍÍÍÍÍÍÍÍÍÍÍÍÍÍÍÍÍÍÍÍÍÍÍÍÍÍÍÍÍ¼

ÉÍÍÍÍÍÍÍÍÍÍÍÍÍÍÍÍÍÍÍÍÍÍÍÍÍÍÍÍÍÍÍÍÍÍÍÍÍÍ»
ºPRIORITY PREEMPTOR 5                1 1 1º
ºPHASE.........  1 2 3 4 5 6 7 8 9 0 1 2º
ºTERM PHASE OVLP  . . . . . . . . . . . .º
ºTRK CLR PHASE..  . . . . . . . . . . . .º
ºHOLD PHASES....  . . . X . . . . . . . .º
ºEXIT PHASES....  . . . . . . . . . . . .º
ºEXIT CALLS.....  . . . . . . . . . . . .º
ºSPARE..........  . . . . . . . . . . . .º
ºTERM OVERLAP...   A: .  B: .  C: .  D: .º
º                                        º
ºACTIVE.........YES  PED DARK....... NO  º
ºPRIORITY....... NO  PED ACTIVE..... NO  º
ºDET LOCK....... NO  ZERO PC TIME... NO  º
ºHOLD FLASH..... NO  PC THRU YELLOW. NO  º
ºTERM OVLP ASAP. NO  TERM PHASES.... NO  º
ºADDITIONAL PAGE(S)                      º
ÈÍÍÍÍÍÍÍÍÍÍÍÍÍÍÍÍÍÍÍÍÍÍÍÍÍÍÍÍÍÍÍÍÍÍÍÍÍÍ¼

ÉÍÍÍÍÍÍÍÍÍÍÍÍÍÍÍÍÍÍÍÍÍÍÍÍÍÍÍÍÍÍÍÍÍÍÍÍÍÍ»
º          PRIORITY PREEMPTOR 5          º
º                                        º
ºDON'T OVERRIDE FLASH.....  X            º
ºFLASH ALL OUTPUTS........  .            º
ºYELLOW-RED GOES GREEN....  .            º
ºENABLE MAX PREEMPT TIME..  X            º
ºACTIVE ONLY DURING HOLD..  .            º
ºNO CVM IN FLASH..........  .            º
ºFAST FLASH GRN ON HOLD...  .            º
ºOUT OF FLASH.............  GREEN        º
º                                        º
º                                        º
º                                        º
º                                        º
º                                        º
ºADDITIONAL PAGE(S)                      º
ÈÍÍÍÍÍÍÍÍÍÍÍÍÍÍÍÍÍÍÍÍÍÍÍÍÍÍÍÍÍÍÍÍÍÍÍÍÍÍ¼

ÉÍÍÍÍÍÍÍÍÍÍÍÍÍÍÍÍÍÍÍÍÍÍÍÍÍÍÍÍÍÍÍÍÍÍÍÍÍÍ»
º          PRIORITY PREEMPTOR 5          º
º                                        º
ºMAX TIME...... 90  DURATION TIME..  0   º
ºMIN HOLD TIME.  0  DELAY TIME.....  0   º
ºMIN PED CLEAR.  0  INHIBIT TIME...  0   º
ºEXIT MAX......  0  HLD DELAY TIME.  0   º
º                                        º
º                GRN  YEL  RED           º
ºMINIMUM.......    0  0.0  0.0           º
ºTRACK CLEAR...    0  0.0  0.0           º
ºHOLD..........       0.0  0.0           º
```

```
º                                          º
ºLINKED PREEMPTOR.....  0                  º
º                                          º
º                                          º
ºEND OF SUBMENU                            º
ÈÍÍÍÍÍÍÍÍÍÍÍÍÍÍÍÍÍÍÍÍÍÍÍÍÍÍÍÍÍÍÍÍÍÍÍÍÍÍ¼

ÉÍÍÍÍÍÍÍÍÍÍÍÍÍÍÍÍÍÍÍÍÍÍÍÍÍÍÍÍÍÍÍÍÍÍÍÍÍÍ»
ºPRIORITY PREEMPTOR 6                 1 1 1º
ºPHASE.....  1 2 3 4 5 6 7 8 9 0 1 2º
ºTERM PHASE OVLP  . . . . . .º
ºTRK CLR PHASE..  . . . . . .º
ºHOLD PHASES....  . . X . . . . X . . . .º
ºEXIT PHASES....  . . . . . .º
ºEXIT CALLS.....  . . . . . .º
ºSPARE.....  . . . . . .º
ºTERM OVERLAP...   A: .  B: .  C: .  D: .º
º                                          º
ºACTIVE.....YES  PED DARK....... NO  º
ºPRIORITY....... NO  PED ACTIVE..... NO  º
ºDET LOCK....... NO  ZERO PC TIME... NO  º
ºHOLD FLASH..... NO  PC THRU YELLOW. NO  º
ºTERM OVLP ASAP. NO  TERM PHASES.... NO  º
ºADDITIONAL PAGE(S)                        º
ÈÍÍÍÍÍÍÍÍÍÍÍÍÍÍÍÍÍÍÍÍÍÍÍÍÍÍÍÍÍÍÍÍÍÍÍÍÍÍ¼

ÉÍÍÍÍÍÍÍÍÍÍÍÍÍÍÍÍÍÍÍÍÍÍÍÍÍÍÍÍÍÍÍÍÍÍÍÍÍÍ»
º          PRIORITY PREEMPTOR 6            º
º                                          º
ºDON'T OVERRIDE FLASH.....  X              º
ºFLASH ALL OUTPUTS........  .              º
ºYELLOW-RED GOES GREEN....  .              º
ºENABLE MAX PREEMPT TIME..  X              º
ºACTIVE ONLY DURING HOLD..  .              º
ºNO CVM IN FLASH..........  .              º
ºFAST FLASH GRN ON HOLD...  .              º
ºOUT OF FLASH.............  GREEN          º
º                                          º
º                                          º
º                                          º
º                                          º
º                                          º
ºADDITIONAL PAGE(S)                        º
ÈÍÍÍÍÍÍÍÍÍÍÍÍÍÍÍÍÍÍÍÍÍÍÍÍÍÍÍÍÍÍÍÍÍÍÍÍÍÍ¼

ÉÍÍÍÍÍÍÍÍÍÍÍÍÍÍÍÍÍÍÍÍÍÍÍÍÍÍÍÍÍÍÍÍÍÍÍÍÍÍ»
º          PRIORITY PREEMPTOR 6            º
º                                          º
ºMAX TIME..... 90  DURATION TIME..  0   º
ºMIN HOLD TIME.  0  DELAY TIME.....  0   º
ºMIN PED CLEAR.  0  INHIBIT TIME...  0   º
ºEXIT MAX......  0  HLD DELAY TIME.  0   º
º                                          º
º                GRN  YEL  RED             º
ºMINIMUM.......    0  0.0  0.0            º
ºTRACK CLEAR...    0  0.0  0.0            º
ºHOLD..........       0.0  0.0            º
º                                          º
ºLINKED PREEMPTOR.....  0                  º
º                                          º
º                                          º
ºEND OF SUBMENU                            º
ÈÍÍÍÍÍÍÍÍÍÍÍÍÍÍÍÍÍÍÍÍÍÍÍÍÍÍÍÍÍÍÍÍÍÍÍÍÍÍ¼
```

```
É͸»
º              BUS PREEMPTOR                 º
º                                            º
º                     - BUS PREEMPTOR -      º
º                      1    2    3    4      º
ºPREEMPTOR ACTIVE.     .    .    .    .      º
ºDETECTOR LOCK....     .    .    .    .      º
ºMAXIMUM TIME.....     0    0    0    0      º
ºRESERVICE TIME...     0    0    0    0      º
ºDELAY TIME.......     0    0    0    0      º
ºINHIBIT TIME.....     0    0    0    0      º
ºENTRANCE GREEN...     0    0    0    0      º
ºENTRANCE PED CLR.     0    0    0    0      º
ºENTRANCE YELLOW..   0.0  0.0  0.0  0.0      º
ºENTRANCE RED.....   0.0  0.0  0.0  0.0      º
ºMIN HOLD TIME....     0    0    0    0      º
ºADDITIONAL PAGE(S)                          º
È͸¼

É͸»
º              BUS PREEMPTOR                 º
º                                            º
º                  ------ HOLD PHASE -----   º
º                                     1 1 1  º
º                  1 2 3 4 5 6 7 8 9 0 1 2   º
ºPREEMPTOR 1....   . . . . . . . . . . . .   º
ºPREEMPTOR 2....   . . . . . . . . . . . .   º
ºPREEMPTOR 3....   . . . . . . . . . . . .   º
ºPREEMPTOR 4....   . . . . . . . . . . . .   º
º                                            º
º                                            º
º                                            º
º                                            º
º                                            º
º                                            º
ºEND OF SUBMENU                              º
È͸¼

♀

É͸»
º*******************************************º
º*   ECONOLITE CONTROL PRODUCTS, INC.      *º
º*             ASC/2-2000                  *º
º*          Copyright (C) 1992             *º
º*                                         *º
º* City of Ontario, Traffic Engineering    *º
º*  ASC/2-2100  Configuration Ver. 1.1     *º
º*                                         *º
º*   SOFTWARE ASSY             VERSION     *º
º*   BOOT            32783        1.26     *º
º*   MAIN PROGRAM    32787        1.61     *º
º*                                         *º
º*                                         *º
º*                                         *º
º*                                         *º
º*******************************************º
È͸¼

É͸»
º       NIC/TOD CLOCK/CALENDAR DATA          º
º                                            º
º                                            º
ºDATE SET:  5/24/18  | ENTER DATE/TIME       º
```

```
ºTIME SET: 10:19:30  | THEN PRESS ENTER  º
º                                       º
ºMANUAL NIC PROGRAM STEP    0           º
ºMANUAL TOD PROGRAM STEP    0           º
º                                       º
ºSYNC REFERENCE TIME    0:00            º
ºSYNC REFERENCE.........REFERENCE TIME  º
º                                       º
ºWEEK 1 BEGINS ON 1ST SUNDAY  .         º
ºDISABLE DAYLIGHT SAVINGS     .         º
ºDST BEGINS LAST SUNDAY       .         º
ºEND OF SUBMENU                         º
ÈÍÍÍÍÍÍÍÍÍÍÍÍÍÍÍÍÍÍÍÍÍÍÍÍÍÍÍÍÍÍÍÍÍÍÍÍÍÍ¼

ÉÍÍÍÍÍÍÍÍÍÍÍÍÍÍÍÍÍÍÍÍÍÍÍÍÍÍÍÍÍÍÍÍÍÍÍÍÍÍ»
º         NIC/TOD WEEKLY PROGRAMS       º
ºWEEK  SUN  MON  TUE  WED  THU  FRI  SAT º
º  1    2    1    1    1    1    1    2  º
º  2    2    1    1    1    1    1    2  º
º  3    2    1    1    1    1    1    2  º
º  4    2    1    1    1    1    1    2  º
º  5    2    1    1    1    1    1    2  º
º  6    2    1    1    1    1    1    2  º
º  7    2    1    1    1    1    1    2  º
º  8    2    1    1    1    1    1    2  º
º  9    2    1    1    1    1    1    2  º
º 10    2    1    1    1    1    1    2  º
º                                       º
º                                       º
º                                       º
ºEND OF SUBMENU                         º
ÈÍÍÍÍÍÍÍÍÍÍÍÍÍÍÍÍÍÍÍÍÍÍÍÍÍÍÍÍÍÍÍÍÍÍÍÍÍÍ¼

♀
ÉÍÍÍÍÍÍÍÍÍÍÍÍÍÍÍÍÍÍÍÍÍÍÍÍÍÍÍÍÍÍÍÍÍÍÍÍÍÍ»
º         NIC/TOD YEARLY PROGRAM        º
ºWEEK OF YEAR      1  2  3  4  5  6  7  8º
ºWEEKLY PROGRAM    1  1  1  1  1  1  1  1º
º                                       º
ºWEEK OF YEAR      9 10 11 12 13 14 15 16º
ºWEEKLY PROGRAM    1  1  1  1  1  1  1  1º
º                                       º
ºWEEK OF YEAR     17 18 19 20 21 22 23 24º
ºWEEKLY PROGRAM    1  1  1  1  1  1  1  1º
º                                       º
ºWEEK OF YEAR     25 26 27 28 29 30 31 32º
ºWEEKLY PROGRAM    1  1  1  1  1  1  1  1º
º                                       º
ºWEEK OF YEAR     33 34 35 36 37 38 39 40º
ºWEEKLY PROGRAM    1  1  1  1  1  1  1  1º
ºADDITIONAL SCREEN(S)                   º
ÈÍÍÍÍÍÍÍÍÍÍÍÍÍÍÍÍÍÍÍÍÍÍÍÍÍÍÍÍÍÍÍÍÍÍÍÍÍÍ¼

ÉÍÍÍÍÍÍÍÍÍÍÍÍÍÍÍÍÍÍÍÍÍÍÍÍÍÍÍÍÍÍÍÍÍÍÍÍÍÍ»
º         NIC/TOD YEARLY PROGRAM        º
º                                       º
ºWEEK OF YEAR     41 42 43 44 45 46 47 48º
ºWEEKLY PROGRAM    1  1  1  1  1  1  1  1º
º                                       º
ºWEEK OF YEAR              49 50 51 52 53º
ºWEEKLY PROGRAM             1  1  1  1  1º
º                                       º
º                                       º
º                                       º
```

END OF SUBMENU

NIC/TOD HOLIDAY PROGRAM

HOLIDAY	FLOAT/ FIXED	MON/ MON	DOW/ DOM	WOM/ YEAR	PROG
1	FIXED	0	0	0	0
2	FIXED	0	0	0	0
3	FIXED	0	0	0	0
4	FIXED	0	0	0	0
5	FIXED	0	0	0	0
6	FIXED	0	0	0	0
7	FIXED	0	0	0	0
8	FIXED	0	0	0	0
9	FIXED	0	0	0	0
10	FIXED	0	0	0	0
11	FIXED	0	0	0	0
12	FIXED	0	0	0	0

ADDITIONAL SCREEN(S)

NIC/TOD HOLIDAY PROGRAM

HOLIDAY	FLOAT/ FIXED	MON/ MON	DOW/ DOM	WOM/ YEAR	PROG
13	FIXED	0	0	0	0
14	FIXED	0	0	0	0
15	FIXED	0	0	0	0
16	FIXED	0	0	0	0
17	FIXED	0	0	0	0
18	FIXED	0	0	0	0
19	FIXED	0	0	0	0
20	FIXED	0	0	0	0
21	FIXED	0	0	0	0
22	FIXED	0	0	0	0
23	FIXED	0	0	0	0
24	FIXED	0	0	0	0

ADDITIONAL SCREEN(S)

NIC/TOD HOLIDAY PROGRAM

HOLIDAY	FLOAT/ FIXED	MON/ MON	DOW/ DOM	WOM/ YEAR	PROG
25	FIXED	0	0	0	0
26	FIXED	0	0	0	0
27	FIXED	0	0	0	0
28	FIXED	0	0	0	0
29	FIXED	0	0	0	0
30	FIXED	0	0	0	0
31	FIXED	0	0	0	0
32	FIXED	0	0	0	0
33	FIXED	0	0	0	0
34	FIXED	0	0	0	0
35	FIXED	0	0	0	0
36	FIXED	0	0	0	0

END OF SUBMENU

```
ÈÍÍÍÍÍÍÍÍÍÍÍÍÍÍÍÍÍÍÍÍÍÍÍÍÍÍÍÍÍÍÍÍÍÍÍÍÍÍÍÍÍÍ¼

♀
ÉÍÍÍÍÍÍÍÍÍÍÍÍÍÍÍÍÍÍÍÍÍÍÍÍÍÍÍÍÍÍÍÍÍÍÍÍÍÍÍÍÍÍ»
º*****************************************º
º*   ECONOLITE CONTROL PRODUCTS, INC.    *º
º*            ASC/2-2000                 *º
º*          Copyright (C) 1992           *º
º*                                       *º
º* City of Ontario, Traffic Engineering *º
º*  ASC/2-2100  Configuration Ver. 1.1   *º
º*                                       *º
º*   SOFTWARE ASSY             VERSION   *º
º*   BOOT            32783        1.26   *º
º*   MAIN PROGRAM    32787        1.61   *º
º*                                       *º
º*                                       *º
º*                                       *º
º*                                       *º
º*****************************************º
ÈÍÍÍÍÍÍÍÍÍÍÍÍÍÍÍÍÍÍÍÍÍÍÍÍÍÍÍÍÍÍÍÍÍÍÍÍÍÍÍÍÍÍ¼

ÉÍÍÍÍÍÍÍÍÍÍÍÍÍÍÍÍÍÍÍÍÍÍÍÍÍÍÍÍÍÍÍÍÍÍÍÍÍÍÍÍÍÍ»
º          DETECTOR TYPE/TIMERS           º
º                              NO    LOG   º
ºDET TYPE LOCK  EXTEND DELAY RESET ENABLEº
º 1   0     .     0.0     0    .       .  º
º 2   1     .     0.0     5    .       .  º
º 3   1     .     0.0     2    .       .  º
º 4   0     .     0.0     0    .       .  º
º 5   0     .     0.0     0    .       .  º
º 6   0     .     0.0     0    .       .  º
º 7   0     .     0.0     0    .       .  º
º 8   0     .     0.0     0    .       .  º
º 9   0     .     0.0     0    .       .  º
º10   0     .     0.0     0    .       .  º
º11   0     .     0.0     0    .       .  º
º12   0     .     0.0     0    .       .  º
ºADDITIONAL SCREEN(S)                     º
ÈÍÍÍÍÍÍÍÍÍÍÍÍÍÍÍÍÍÍÍÍÍÍÍÍÍÍÍÍÍÍÍÍÍÍÍÍÍÍÍÍÍÍ¼

ÉÍÍÍÍÍÍÍÍÍÍÍÍÍÍÍÍÍÍÍÍÍÍÍÍÍÍÍÍÍÍÍÍÍÍÍÍÍÍÍÍÍÍ»
º          DETECTOR TYPE/TIMERS           º
º                              NO    LOG   º
ºDET TYPE LOCK  EXTEND DELAY RESET ENABLEº
º13   0     .     0.0     0    .       .  º
º14   0     .     0.0     0    .       .  º
º15   0     .     0.0     0    .       .  º
º16   0     .     0.0     0    .       .  º
º17   0     .     0.0     0    .       .  º
º18   0     .     0.0     0    .       .  º
º19   0     .     0.0     0    .       .  º
º20   0     .     0.0     0    .       .  º
º21   0     .     0.0     0    .       .  º
º22   0     .     0.0     0    .       .  º
º23   0     .     0.0     0    .       .  º
º24   0     .     0.0     0    .       .  º
ºADDITIONAL SCREEN(S)                     º
ÈÍÍÍÍÍÍÍÍÍÍÍÍÍÍÍÍÍÍÍÍÍÍÍÍÍÍÍÍÍÍÍÍÍÍÍÍÍÍÍÍÍÍ¼

♀
ÉÍÍÍÍÍÍÍÍÍÍÍÍÍÍÍÍÍÍÍÍÍÍÍÍÍÍÍÍÍÍÍÍÍÍÍÍÍÍÍÍÍÍ»
º          DETECTOR TYPE/TIMERS           º
º                              NO    LOG   º
ºDET TYPE LOCK  EXTEND DELAY RESET ENABLEº
```

```
º25   0     .     0.0     0    .      .  º
º26   0     .     0.0     0    .      .  º
º27   0     .     0.0     0    .      .  º
º28   0     .     0.0     0    .      .  º
º29   0     .     0.0     0    .      .  º
º30   0     .     0.0     0    .      .  º
º31   0     .     0.0     0    .      .  º
º32   0     .     0.0     0    .      .  º
º33   0     .     0.0     0    .      .  º
º34   0     .     0.0     0    .      .  º
º35   0     .     0.0     0    .      .  º
º36   0     .     0.0     0    .      .  º
ºADDITIONAL SCREEN(S)                     º
ÈÍÍÍÍÍÍÍÍÍÍÍÍÍÍÍÍÍÍÍÍÍÍÍÍÍÍÍÍÍÍÍÍÍÍÍÍÍÍÍÍÍ¼

ÉÍÍÍÍÍÍÍÍÍÍÍÍÍÍÍÍÍÍÍÍÍÍÍÍÍÍÍÍÍÍÍÍÍÍÍÍÍÍÍÍÍ»
º          DETECTOR TYPE/TIMERS           º
º                                NO    LOG   º
ºDET TYPE LOCK  EXTEND DELAY RESET ENABLEº
º37   0     .     0.0     0    .      .  º
º38   0     .     0.0     0    .      .  º
º39   0     .     0.0     0    .      .  º
º40   0     .     0.0     0    .      .  º
º41   0     .     0.0     0    .      .  º
º42   0     .     0.0     0    .      .  º
º43   0     .     0.0     0    .      .  º
º44   0     .     0.0     0    .      .  º
º45   0     .     0.0     0    .      .  º
º46   0     .     0.0     0    .      .  º
º47   0     .     0.0     0    .      .  º
º48   0     .     0.0     0    .      .  º
ºADDITIONAL SCREEN(S)                     º
ÈÍÍÍÍÍÍÍÍÍÍÍÍÍÍÍÍÍÍÍÍÍÍÍÍÍÍÍÍÍÍÍÍÍÍÍÍÍÍÍÍÍ¼

ÉÍÍÍÍÍÍÍÍÍÍÍÍÍÍÍÍÍÍÍÍÍÍÍÍÍÍÍÍÍÍÍÍÍÍÍÍÍÍÍÍÍ»
º          DETECTOR TYPE/TIMERS           º
º                                NO    LOG   º
ºDET TYPE LOCK  EXTEND DELAY RESET ENABLEº
º49   0     .     0.0     0    .      .  º
º50   0     .     0.0     0    .      .  º
º51   0     .     0.0     0    .      .  º
º52   0     .     0.0     0    .      .  º
º53   0     .     0.0     0    .      .  º
º54   0     .     0.0     0    .      .  º
º55   0     .     0.0     0    .      .  º
º56   0     .     0.0     0    .      .  º
º57   0     .     0.0     0    .      .  º
º58   0     .     0.0     0    .      .  º
º59   0     .     0.0     0    .      .  º
º60   0     .     0.0     0    .      .  º
ºADDITIONAL SCREEN(S)                     º
ÈÍÍÍÍÍÍÍÍÍÍÍÍÍÍÍÍÍÍÍÍÍÍÍÍÍÍÍÍÍÍÍÍÍÍÍÍÍÍÍÍÍ¼

♀

ÉÍÍÍÍÍÍÍÍÍÍÍÍÍÍÍÍÍÍÍÍÍÍÍÍÍÍÍÍÍÍÍÍÍÍÍÍÍÍÍÍÍ»
º          DETECTOR TYPE/TIMERS           º
º                                NO    LOG   º
ºDET TYPE LOCK  EXTEND DELAY RESET ENABLEº
º53   0     .     0.0     0    .      .  º
º54   0     .     0.0     0    .      .  º
º55   0     .     0.0     0    .      .  º
º56   0     .     0.0     0    .      .  º
º57   0     .     0.0     0    .      .  º
º58   0     .     0.0     0    .      .  º
```

```
º59   0     .     0.0     0    .      .  º
º60   0     .     0.0     0    .      .  º
º61   0     .     0.0     0    .      .  º
º62   0     .     0.0     0    .      .  º
º63   0     .     0.0     0    .      .  º
º64   0     .     0.0     0    .      .  º
ºEND OF SUBMENU                           º
ÈÍÍÍÍÍÍÍÍÍÍÍÍÍÍÍÍÍÍÍÍÍÍÍÍÍÍÍÍÍÍÍÍÍÍÍÍÍÍÍÍ¼

ÉÍÍÍÍÍÍÍÍÍÍÍÍÍÍÍÍÍÍÍÍÍÍÍÍÍÍÍÍÍÍÍÍÍÍÍÍÍÍÍÍ»
º      DETECTOR PHASE ASSIGNMENT          º
º              PHASE ASSIGNMENT: 1 1 1    º
ºDETECTOR      1 2 3 4 5 6 7 8 9 0 1 2    º
º    1         . . . . . . . . . . . .    º
º    2         . X . . . . . . . . . .    º
º    3         . . X . . . . . . . . .    º
º    4         . . . X . . . . . . . .    º
º    5         . . . . . . . . . . . .    º
º    6         . . . . . . . . . . . .    º
º    7         . . . . . . . . . . . .    º
º    8         . . . . . . . X . . . .    º
º    9         . . . . . . . . . . . .    º
º   10         . . . . . . . . . . . .    º
º   11         . . . . . . . . . . . .    º
º   12         . . . X . . . . . . . .    º
ºADDITIONAL SCREEN(S)                     º
ÈÍÍÍÍÍÍÍÍÍÍÍÍÍÍÍÍÍÍÍÍÍÍÍÍÍÍÍÍÍÍÍÍÍÍÍÍÍÍÍÍ¼

ÉÍÍÍÍÍÍÍÍÍÍÍÍÍÍÍÍÍÍÍÍÍÍÍÍÍÍÍÍÍÍÍÍÍÍÍÍÍÍÍÍ»
º      DETECTOR PHASE ASSIGNMENT          º
º              PHASE ASSIGNMENT: 1 1 1    º
ºDETECTOR      1 2 3 4 5 6 7 8 9 0 1 2    º
º   13         . . . . . . . . . . . .    º
º   14         . . . . . . . . . . . .    º
º   15         . . . . . . . . . . . .    º
º   16         . . . . . . . X . . . .    º
º   17         . . . . . . . . . . . .    º
º   18         . . . . . . . . . . . .    º
º   19         . . . . . . . . . . . .    º
º   20         . . . . . . . . . . . .    º
º   21         . . . . . . . . . . . .    º
º   22         . . . . . . . . . . . .    º
º   23         . . . . . . . . . . . .    º
º   24         . . . . . . . . . . . .    º
ºADDITIONAL SCREEN(S)                     º
ÈÍÍÍÍÍÍÍÍÍÍÍÍÍÍÍÍÍÍÍÍÍÍÍÍÍÍÍÍÍÍÍÍÍÍÍÍÍÍÍÍ¼

ÉÍÍÍÍÍÍÍÍÍÍÍÍÍÍÍÍÍÍÍÍÍÍÍÍÍÍÍÍÍÍÍÍÍÍÍÍÍÍÍÍ»
ºPED AND SYSTEM DETECTOR LOCAL ASSIGNMENTº
º                                         º
ºDETECTOR LOG INTERVAL........  0 MINUTESº
º-----------------------------------------º
ºLOCAL          - PHASE PED DETECTOR -    º
ºPED DET         1   2   3   4   5   6    º
ºNUMBER..        0   1   0   0   0   0    º
º                7   8   9  10  11  12    º
ºNUMBER..        0   0   0   0   0   0    º
º-----------------------------------------º
ºLOCAL      -- LOCAL SYSTEM DET NUMBER ---º
ºDETECTOR   1   2   3   4   5   6   7   8º
ºNUMBER..   0   0   0   0   0   0   0   0º
º           9  10  11  12  13  14  15  16º
ºNUMBER..   0   0   0   0   0   0   0   0º
```

```
ºEND OF SUBMENU                                                 º
ÈÍÍÍÍÍÍÍÍÍÍÍÍÍÍÍÍÍÍÍÍÍÍÍÍÍÍÍÍÍÍÍÍÍÍÍÍÍÍÍÍÍÍÍÍÍÍÍÍÍÍÍÍÍÍ¼

ÉÍÍÍÍÍÍÍÍÍÍÍÍÍÍÍÍÍÍÍÍÍÍÍÍÍÍÍÍÍÍÍÍÍÍÍÍÍÍÍÍÍÍÍÍÍÍÍÍÍÍÍÍÍÍ»
º            CROSS SWITCHING                                    º
º               PHASES:           1 1 1                        º
ºDETECTOR       1 2 3 4 5 6 7 8 9 0 1 2                        º
º    1          . . . . . . . . . . . .                        º
º    2          . X . . . . . . . . . .                        º
º    3          . . . . . . . . . . . .                        º
º    4          . . . . . . . . . . . .                        º
º    5          . . . . . . . . . . . .                        º
º    6          . . . . . . . . . . . .                        º
º    7          . . . . . . . . . . . .                        º
º    8          . . . . . . . . . . . .                        º
º    9          . . . . . . . . . . . .                        º
º   10          . X . . . . . . . . . .                        º
º   11          . . . . . . . . . . . .                        º
º   12          . . . . . . . . . . . .                        º
ºADDITIONAL SCREEN(S)                                          º
ÈÍÍÍÍÍÍÍÍÍÍÍÍÍÍÍÍÍÍÍÍÍÍÍÍÍÍÍÍÍÍÍÍÍÍÍÍÍÍÍÍÍÍÍÍÍÍÍÍÍÍÍÍÍÍ¼

ÉÍÍÍÍÍÍÍÍÍÍÍÍÍÍÍÍÍÍÍÍÍÍÍÍÍÍÍÍÍÍÍÍÍÍÍÍÍÍÍÍÍÍÍÍÍÍÍÍÍÍÍÍÍÍ»
º             SPEED DETECTORS                                  º
º                                                              º
º  SPEED DET NUMBER:  ...1....2....3....4º
ºONE DETECTOR SPEED:                                           º
º LOCAL DET NUMBER..     0    0    0    0º
º VEHICLE LENGTH....     0    0    0    0º
º LOOP LENGTH.......     0    0    0    0º
º                                                              º
ºTWO DETECTOR SPEED:                                           º
º LOCAL DET NUMBER..     0    0    0    0º
º SPEED TRAP LENGTH.     0    0    0    0º
º                                                              º
ºENABLE LOG.........     .    .    .    .º
º                                                              º
ºUNITS:  INCHES                                                º
ºADDITIONAL PAGE(S)                          MORE->º
ÈÍÍÍÍÍÍÍÍÍÍÍÍÍÍÍÍÍÍÍÍÍÍÍÍÍÍÍÍÍÍÍÍÍÍÍÍÍÍÍÍÍÍÍÍÍÍÍÍÍÍÍÍÍÍ¼

♀

ÉÍÍÍÍÍÍÍÍÍÍÍÍÍÍÍÍÍÍÍÍÍÍÍÍÍÍÍÍÍÍÍÍÍÍÍÍÍÍÍÍÍÍÍÍÍÍÍÍÍÍÍÍÍÍ»
º             SPEED DETECTORS                                  º
º                                                              º
º  SPEED DET NUMBER:  ...5....6....7....8º
ºONE DETECTOR SPEED:                                           º
º LOCAL DET NUMBER..     0    0    0    0º
º VEHICLE LENGTH....     0    0    0    0º
º LOOP LENGTH.......     0    0    0    0º
º                                                              º
ºTWO DETECTOR SPEED:                                           º
º LOCAL DET NUMBER..     0    0    0    0º
º SPEED TRAP LENGTH.     0    0    0    0º
º                                                              º
ºENABLE LOG.........     .    .    .    .º
º                                                              º
ºUNITS:  INCHES                                                º
ºADDITIONAL PAGE(S)                    <-MORE  º
ÈÍÍÍÍÍÍÍÍÍÍÍÍÍÍÍÍÍÍÍÍÍÍÍÍÍÍÍÍÍÍÍÍÍÍÍÍÍÍÍÍÍÍÍÍÍÍÍÍÍÍÍÍÍÍ¼

ÉÍÍÍÍÍÍÍÍÍÍÍÍÍÍÍÍÍÍÍÍÍÍÍÍÍÍÍÍÍÍÍÍÍÍÍÍÍÍÍÍÍÍÍÍÍÍÍÍÍÍÍÍÍÍ»
º             SPEED DETECTORS                                  º
º                                                              º
```

```
º  SPEED DET NUMBER:  ...9...10...11...12º
ºONE DETECTOR SPEED:                      º
º LOCAL DET NUMBER..     0    0    0    0º
º VEHICLE LENGTH....     0    0    0    0º
º LOOP LENGTH.......     0    0    0    0º
º                                         º
ºTWO DETECTOR SPEED:                      º
º LOCAL DET NUMBER..     0    0    0    0º
º SPEED TRAP LENGTH.     0    0    0    0º
º                                         º
ºENABLE LOG.........     .    .    .    .º
º                                         º
º                                         º
ºEND OF SUBMENU                    MORE->º
ÈÍÍÍÍÍÍÍÍÍÍÍÍÍÍÍÍÍÍÍÍÍÍÍÍÍÍÍÍÍÍÍÍÍÍÍÍÍÍÍÍÍ¼

ÉÍÍÍÍÍÍÍÍÍÍÍÍÍÍÍÍÍÍÍÍÍÍÍÍÍÍÍÍÍÍÍÍÍÍÍÍÍÍÍÍÍ»
º            SPEED DETECTORS              º
º                                         º
º  SPEED DET NUMBER:  ..13...14...15...16º
ºONE DETECTOR SPEED:                      º
º LOCAL DET NUMBER..     0    0    0    0º
º VEHICLE LENGTH....     0    0    0    0º
º LOOP LENGTH.......     0    0    0    0º
º                                         º
ºTWO DETECTOR SPEED:                      º
º LOCAL DET NUMBER..     0    0    0    0º
º SPEED TRAP LENGTH.     0    0    0    0º
º                                         º
ºENABLE LOG.........     .    .    .    .º
º                                         º
º                                         º
ºEND OF SUBMENU                  <-MORE   º
ÈÍÍÍÍÍÍÍÍÍÍÍÍÍÍÍÍÍÍÍÍÍÍÍÍÍÍÍÍÍÍÍÍÍÍÍÍÍÍÍÍÍ¼

ÉÍÍÍÍÍÍÍÍÍÍÍÍÍÍÍÍÍÍÍÍÍÍÍÍÍÍÍÍÍÍÍÍÍÍÍÍÍÍÍÍÍ»
º      PED DETECTOR DIAGNOSTIC PLAN       º
º                                         º
ºPLAN DET NUMBER  1  2  3  4  5  6  7  8 º
º  1  DIAG NUM..  0  0  0  0  0  0  0  0 º
º     SCALING...  1  1  1  1  1  1  1  1 º
º  2  DIAG NUM..  0  0  0  0  0  0  0  0 º
º     SCALING...  1  1  1  1  1  1  1  1 º
º  3  DIAG NUM..  0  0  0  0  0  0  0  0 º
º     SCALING...  1  1  1  1  1  1  1  1 º
º  4  DIAG NUM..  0  0  0  0  0  0  0  0 º
º     SCALING...  1  1  1  1  1  1  1  1 º
º  5  DIAG NUM..  0  0  0  0  0  0  0  0 º
º     SCALING...  1  1  1  1  1  1  1  1 º
º  6  DIAG NUM..  0  0  0  0  0  0  0  0 º
º     SCALING...  1  1  1  1  1  1  1  1 º
ºADDITIONAL SCREEN(S)              MORE->º
ÈÍÍÍÍÍÍÍÍÍÍÍÍÍÍÍÍÍÍÍÍÍÍÍÍÍÍÍÍÍÍÍÍÍÍÍÍÍÍÍÍÍ¼

ÉÍÍÍÍÍÍÍÍÍÍÍÍÍÍÍÍÍÍÍÍÍÍÍÍÍÍÍÍÍÍÍÍÍÍÍÍÍÍÍÍÍ»
º      PED DETECTOR DIAGNOSTIC PLAN       º
º                                         º
ºPLAN DET NUMBER  1  2  3  4  5  6  7  8 º
º  7  DIAG NUM..  0  0  0  0  0  0  0  0 º
º     SCALING...  1  1  1  1  1  1  1  1 º
º  8  DIAG NUM..  0  0  0  0  0  0  0  0 º
º     SCALING...  1  1  1  1  1  1  1  1 º
º                                         º
```

```
º                                                 º
º                                                 º
º                                                 º
º                                                 º
º                                                 º
º                                                 º
º                                                 º
ºEND OF SUBMENU                        MORE->º
ÈÍÍÍÍÍÍÍÍÍÍÍÍÍÍÍÍÍÍÍÍÍÍÍÍÍÍÍÍÍÍÍÍÍÍÍÍÍÍÍÍÍÍ¼

ÉÍÍÍÍÍÍÍÍÍÍÍÍÍÍÍÍÍÍÍÍÍÍÍÍÍÍÍÍÍÍÍÍÍÍÍÍÍÍÍÍÍÍ»
º      PED DETECTOR DIAGNOSTIC PLAN               º
º                                                 º
ºPLAN DET NUMBER  9 10 11 12                      º
º  1  DIAG NUM..  0  0  0  0                      º
º     SCALING...  1  1  1  1                      º
º  2  DIAG NUM..  0  0  0  0                      º
º     SCALING...  1  1  1  1                      º
º  3  DIAG NUM..  0  0  0  0                      º
º     SCALING...  1  1  1  1                      º
º  4  DIAG NUM..  0  0  0  0                      º
º     SCALING...  1  1  1  1                      º
º  5  DIAG NUM..  0  0  0  0                      º
º     SCALING...  1  1  1  1                      º
º  6  DIAG NUM..  0  0  0  0                      º
º     SCALING...  1  1  1  1                      º
ºADDITIONAL SCREEN(S)                  <-MORE     º
ÈÍÍÍÍÍÍÍÍÍÍÍÍÍÍÍÍÍÍÍÍÍÍÍÍÍÍÍÍÍÍÍÍÍÍÍÍÍÍÍÍÍÍ¼

ÉÍÍÍÍÍÍÍÍÍÍÍÍÍÍÍÍÍÍÍÍÍÍÍÍÍÍÍÍÍÍÍÍÍÍÍÍÍÍÍÍÍÍ»
º      PED DETECTOR DIAGNOSTIC PLAN               º
º                                                 º
ºPLAN DET NUMBER  9 10 11 12                      º
º  7  DIAG NUM..  0  0  0  0                      º
º     SCALING...  1  1  1  1                      º
º  8  DIAG NUM..  0  0  0  0                      º
º     SCALING...  1  1  1  1                      º
º                                                 º
º                                                 º
º                                                 º
º                                                 º
º                                                 º
º                                                 º
º                                                 º
º                                                 º
ºEND OF SUBMENU                        <-MORE     º
ÈÍÍÍÍÍÍÍÍÍÍÍÍÍÍÍÍÍÍÍÍÍÍÍÍÍÍÍÍÍÍÍÍÍÍÍÍÍÍÍÍÍÍ¼

ÉÍÍÍÍÍÍÍÍÍÍÍÍÍÍÍÍÍÍÍÍÍÍÍÍÍÍÍÍÍÍÍÍÍÍÍÍÍÍÍÍÍÍ»
º      DETECTOR DIAGNOSTIC INTERVAL               º
º                                                 º
ºDIAGNOSTIC      NO        MAX      ERRATIC      º
º  NUMBER     ACTIVITY   PRESENCE   COUNTS       º
º    1           0          0          0         º
º    2           0          0          0         º
º    3           0          0          0         º
º    4           0          0          0         º
º    5           0          0          0         º
º    6           0          0          0         º
º    7           0          0          0         º
º    8           0          0          0         º
º    9           0          0          0         º
º   10           0          0          0         º
```

```
º   11           0          0          0   º
ºADDITIONAL SCREEN(S)                       º
ÈÍÍÍÍÍÍÍÍÍÍÍÍÍÍÍÍÍÍÍÍÍÍÍÍÍÍÍÍÍÍÍÍÍÍÍÍÍÍÍÍÍ¼

ÉÍÍÍÍÍÍÍÍÍÍÍÍÍÍÍÍÍÍÍÍÍÍÍÍÍÍÍÍÍÍÍÍÍÍÍÍÍÍÍÍÍ»
º      DETECTOR DIAGNOSTIC INTERVAL         º
º                                           º
ºDIAGNOSTIC     NO        MAX     ERRATIC   º
º  NUMBER    ACTIVITY   PRESENCE  COUNTS    º
º   12           0          0          0   º
º   13           0          0          0   º
º   14           0          0          0   º
º   15           0          0          0   º
º   16           0          0          0   º
º   17           0          0          0   º
º   18           0          0          0   º
º   19           0          0          0   º
º   20           0          0          0   º
º   21           0          0          0   º
º   22           0          0          0   º
ºADDITIONAL SCREEN(S)                       º
ÈÍÍÍÍÍÍÍÍÍÍÍÍÍÍÍÍÍÍÍÍÍÍÍÍÍÍÍÍÍÍÍÍÍÍÍÍÍÍÍÍÍ¼
♀
ÉÍÍÍÍÍÍÍÍÍÍÍÍÍÍÍÍÍÍÍÍÍÍÍÍÍÍÍÍÍÍÍÍÍÍÍÍÍÍÍÍÍ»
º      DETECTOR DIAGNOSTIC INTERVAL         º
º                                           º
ºDIAGNOSTIC     NO        MAX     ERRATIC   º
º  NUMBER    ACTIVITY   PRESENCE  COUNTS    º
º   22           0          0          0   º
º   23           0          0          0   º
º   24           0          0          0   º
º   25           0          0          0   º
º   26           0          0          0   º
º   27           0          0          0   º
º   28           0          0          0   º
º   29           0          0          0   º
º   30           0          0          0   º
º   31           0          0          0   º
º   32           0          0          0   º
ºEND OF SUBMENU                             º
ÈÍÍÍÍÍÍÍÍÍÍÍÍÍÍÍÍÍÍÍÍÍÍÍÍÍÍÍÍÍÍÍÍÍÍÍÍÍÍÍÍÍ¼
♀
```

Location: San Bernardino Fwy EB-WB Archibald Ave (SPI) | **Designed By:** XA

System: Archibald | **District:** 08 | **Installed By:** RCN

Master At: Here | **I/C:** Copper | **Service Info:**

Timing Change:	Date Start:	Date End:	Designed:	Installed:
4/13/2015	10/10/1996			4/13/2015

Intersection Layout

		FLASH
PHASE	1) SBLT Archibald Ave	[ ]
	2) NB Archibald Ave	[ ]
	3) EBLT-WBLT Off Ramps	[ ]
	4) Dummy Phase OVLA & OVLC	[ ]
	5) NBLT Archibald Ave	[ ]
	6) SB Archibald Ave	[ ]
	7) SBRT Archibald Ave Ped Xing	[ ]
	8)	[ ]
OVERLAP	A)	[ ]
	B)	[ ]
	C) EBRT Off Ramp	[ ]
	D) SBRT Archibald Ave (OVL B)	[ ]
	E) WBRT Off Ramp	[ ]
	F) Used As A Dummy Extension	[ ]

Comments and Notes:
 # New Ped 04/13/15

RAM Checksum

Page 2: D458	Page 8: 8B09
Page 3: 7F87	Page 9: D2FD
Page 4: 7ECB	Page 10: DC9A
Page 5: 191A	Page 11: C3CB
Page 6: 191A	Page 12: EF20
Page 7: FB41	Page 13: 86F7

CONFIGURATION PHASE FLAGS

Phases (2-1-1-1)	
Permitted	1 2 3 4 5 6 7 8
Restricted	. . . . .

Phase Recalls (2-1-1-2) *	
Vehicle Min	. 2 . . . 6 . 8
Vehicle Max	. 2 . . . 6 . .
Pedestrian	. . . . .
Bicycle	. . . . .

Phase Locks (2-1-1-3) *	
Red	1 . . . . .
Yellow	1 2 3 . . 6 . .
Force/Max	. . . . .

Phase Features (2-1-1-4) *	
Double Entry	1 2 . . 5 6 . .
Rest In Walk	. . . . .
Rest In Red	. . . . .
Walk 2	. . . . .
Max Green 2	. . . . .
Max Green 3	. . . . .

Startup (2-1-1-5)	*
First Green Phases	. 2 . . . 6 . .
Yellow Start Phases	. . 3 . . . . .
Vehicle Calls	1 2 3 4 5 6 7 8
Pedestrian Calls	. 2 . 4 . 6 . 8
Yellow Start Overlaps	. . . . .
Startup All-Red	5.0

Call To Phase (2-1-2-1)		Omit On Green	
1	. . . . .	1	. . . . .
2	. . . . .	2	. . . . .
3	. . . . .	3	. . . . .
4	. . . . .	4	. . . . .
5	. . . . .	5	. . . . .
6	. . . . .	6	. . . . .
7	. . . . .	7	. . . . .
8	. . . . .	8	. . . . .

Flashing Colors (2-1-2-2)	
Yellow Flash Phases	. . . . .
Yellow Flash Overlap	. . . . .
Flash In Red Phases	. . . . .
Flash In Red Overlap	. . . . .

Special Operation (2-1-2-3)	
Single Exit Phase	. . . . .
Driveway Signal Phases	. . . . .
Driveway Signal Overlaps	. . . . .
Leading Ped Phases	. . . . .

Protected Permissive (2-1-2-4)	
Protected Permissive	. . . . .

Pedestrian (2-1-3) *	
P1	. . . . .
P2	. . . . .
P3	. . . . .
P4	. . . . . 7 .
P5	. . . . .
P6	. . . . . 6 . .
P7	. . . . .
P8	. . . . . 6 . .

Overlap (2-1-4) *				*
Overlap	Parent	Omit	No Start	Not
A	. . . . .	. . . . .	. . . . .	. . . . .
B	. . . . .	. . . . .	. . . . .	. . . . .
C	. . . 4 . . 7 .	. . . . .	. . . . .	. . 3 . . 6 . .
D	1 2 3 4 5 6 . .	. . . . .	. . . . .	. . . . . 7 .
E	. . . 4 . . 7 .	. . . . .	. . . . .	. 2 3 . . . . .
F	1 2 3 . 5 6 . .	. . . . .	. . . . .	. . . 4 . . . .

PHASE TIMING

Phase (2-2)	-1- *	-2- *	-3- *	-4- *	-5- *	-6- *	-7- *	-8- *
--- Walk 1 ---	0	0	0	0	0	7	7	0
Flash Don't Walk	0	0	0	0	0	15	10	0
Minimum Green	5	5	5	5	5	5	0	0
Det Limit	0	0	0	0	0	0	0	0
Max Initial	0	0	0	0	0	0	0	0
Max Green 1	35	40	35	10	35	40	17	0
Max Green 2	35	40	35	10	35	40	17	0
Max Green 3	35	40	35	10	35	40	17	0
Extension	2.0	3.0	2.0	2.0	2.0	3.0	0.0	0.0
Maximum Gap	2.0	3.0	2.0	2.0	2.0	3.0	0.0	0.0
Minimum Gap	2.0	3.0	2.0	2.0	2.0	3.0	0.0	0.0
Add Per Vehicle	0.0	0.0	0.0	0.0	0.0	0.0	0.0	0.0
Reduce Gap By	0.0	0.0	0.0	0.0	0.0	0.0	0.0	0.0
Reduce Every	1.0	1.0	1.0	1.0	1.0	1.0	0.0	1.0
Yellow	4.0	4.0	4.0	3.0	4.0	4.0	3.0	5.0
All-Red	3.0	3.0	3.0	0.0	3.0	3.0	0.0	0.0
Ped/Bike (2-3)	**-1-**	**-2-**	**-3-**	**-4-**	**-5-**	**-6-**	**-7-**	**-8-**
--- Walk 2 ---	0	0	0	0	0	0	0	0
Delay/Early Walk	0	0	0	0	0	0	0	0
Solid Don't Walk	0	0	0	0	0	0	0	0
Bike Green	0	0	0	0	0	0	0	0
Bike All-Red	0.0	0.0	0.0	0.0	0.0	0.0	0.0	0.0

OVERLAP TIMING

Overlap (2-4)	A	B	C	D	E	F
Green	0.0	0.0	0.0	0.0	0.0	0.0
Yellow	5.0	5.0	5.0	5.0	5.0	5.0
Red	0.0	0.0	0.0	0.0	0.0	0.0

Red Revert

Red Revert (2-5)	
Time	5.0
All-Red Sec/Min (2-6)	
All-Red Sec/Min:	SEC

Max 2 Extension

Max/Gap Out (2-7)	
Max Cnt	0
Gap Cnt	0

Local Plan 1...9 (7-1) TIMING DATA

COORDINATION

[Offsets] Green Factors or Press [F] to Select Force-Off

	*	Cycle	Multi	Perm	A	B	C	-1-	-2-	-3-	-4-	-5-	-6-	-7-	-8-
Plan 1	Green Factor	100			12	36	21	20	19	25	10	10	28	10	5
Plan 2	Green Factor														
Plan 3	Green Factor														
Plan 4	Green Factor														
Plan 5	Green Factor														
Plan 6	Green Factor														
Plan 7	Green Factor														
Plan 8	Green Factor														
Plan 9	Green Factor														

Master Timer Sync (7-A)	
Enable in Plans	
1-9	. . . . .
11-19	. . . . .
21-29	. . . . .

Master Sub Master	
Input	
Output	

FREE PLAN PHASE FLAGS

(7-E) Free	
Lag	Omit
. 2 . 4 . 6 . 8	. . . . .
Veh Min	Veh Max
. 2 . . . 6 . .	. . . . .
Ped	Bike
. . . . .	. . . . .
Cond	Cond Grn
. . . . .	10

Local Plan 1...9 (7-1) PHASE FLAGS

	Lag	Sync	Hold	Omit	Veh Min	Veh Max	Ped	Bike
Plan 1	. 2 3 . 5 . . 8	. 2 . . . 6 . .	. . . . .	. . . . .	. . . . .	. . . . .	. . . . .	. . . . .
Plan 2	. . . . .	. . . . .	. . . . .	. . . . .	. . . . .	. . . . .	. . . . .	. . . . .
Plan 3	. . . . .	. . . . .	. . . . .	. . . . .	. . . . .	. . . . .	. . . . .	. . . . .
Plan 4	. . . . .	. . . . .	. . . . .	. . . . .	. . . . .	. . . . .	. . . . .	. . . . .
Plan 5	. . . . .	. . . . .	. . . . .	. . . . .	. . . . .	. . . . .	. . . . .	. . . . .
Plan 6	. . . . .	. . . . .	. . . . .	. . . . .	. . . . .	. . . . .	. . . . .	. . . . .
Plan 7	. . . . .	. . . . .	. . . . .	. . . . .	. . . . .	. . . . .	. . . . .	. . . . .
Plan 8	. . . . .	. . . . .	. . . . .	. . . . .	. . . . .	. . . . .	. . . . .	. . . . .
Plan 9	. . . . .	. . . . .	. . . . .	. . . . .	. . . . .	. . . . .	. . . . .	. . . . .

MANUAL COMMANDS

Manual Plan (4-1)	
Plan	OffSet
	A

Plan: 1-9
15 or 254 = Flash
14 or 255 = Free
Offset A, B, or C

Special Function Override (4-2)			
#	Control	#	Control
1	NORMAL	3	NORMAL
2	NORMAL	4	NORMAL

Detector Reset	(4-3)
Local Manual (4-4)	OFF

Local Plan 11...19 (7-2) TIMING DATA COORDINATION

[Offsets] Green Factors or Press [F] to Select Force-Off

		Cycle	Multi	Perm	A	B	C	-1-	-2-	-3-	-4-	-5-	-6-	-7-	-8-
Plan 11	Green Factor														
Plan 12	Green Factor														
Plan 13	Green Factor														
Plan 14	Green Factor														
Plan 15	Green Factor														
Plan 16	Green Factor														
Plan 17	Green Factor														
Plan 18	Green Factor														
Plan 19	Green Factor														

Local Plan 11...19 (7-2) PHASE FLAGS

	Lag	Sync	Hold	Omit	Veh Min	Veh Max	Ped	Bike
Plan 11	.....	.....	.....	.....	.....	.....	.....	.....
Plan 12	.....	.....	.....	.....	.....	.....	.....	.....
Plan 13	.....	.....	.....	.....	.....	.....	.....	.....
Plan 14	.....	.....	.....	.....	.....	.....	.....	.....
Plan 15	.....	.....	.....	.....	.....	.....	.....	.....
Plan 16	.....	.....	.....	.....	.....	.....	.....	.....
Plan 17	.....	.....	.....	.....	.....	.....	.....	.....
Plan 18	.....	.....	.....	.....	.....	.....	.....	.....
Plan 19	.....	.....	.....	.....	.....	.....	.....	.....

Local Plan 21...29 (7-3) TIMING DATA

COORDINATION

[Offsets] Green Factors or Press [F] to Select Force-Off

		Cycle	Multi	Perm	A	B	C	-1-	-2-	-3-	-4-	-5-	-6-	-7-	-8-
Plan 21	Green Factor														
Plan 22	Green Factor														
Plan 23	Green Factor														
Plan 24	Green Factor														
Plan 25	Green Factor														
Plan 26	Green Factor														
Plan 27	Green Factor														
Plan 28	Green Factor														
Plan 29	Green Factor														

Local Plan 21...29 (7-3) PHASE FLAGS

	Lag	Sync	Hold	Omit	Veh Min	Veh Max	Ped	Bike
Plan 21	. . . . .	. . . . .	. . . . .	. . . . .	. . . . .	. . . . .	. . . . .	. . . . .
Plan 22	. . . . .	. . . . .	. . . . .	. . . . .	. . . . .	. . . . .	. . . . .	. . . . .
Plan 23	. . . . .	. . . . .	. . . . .	. . . . .	. . . . .	. . . . .	. . . . .	. . . . .
Plan 24	. . . . .	. . . . .	. . . . .	. . . . .	. . . . .	. . . . .	. . . . .	. . . . .
Plan 25	. . . . .	. . . . .	. . . . .	. . . . .	. . . . .	. . . . .	. . . . .	. . . . .
Plan 26	. . . . .	. . . . .	. . . . .	. . . . .	. . . . .	. . . . .	. . . . .	. . . . .
Plan 27	. . . . .	. . . . .	. . . . .	. . . . .	. . . . .	. . . . .	. . . . .	. . . . .
Plan 28	. . . . .	. . . . .	. . . . .	. . . . .	. . . . .	. . . . .	. . . . .	. . . . .
Plan 29	. . . . .	. . . . .	. . . . .	. . . . .	. . . . .	. . . . .	. . . . .	. . . . .

DETECTORS

Detector Attributes (5-1) *				Slot
Det	Type	Phases	Lock	
1	COUNT+CALL+EXTEND	1	NO	I1U
2	COUNT+CALL+EXTEND	1	NO	I1L
3	COUNT+CALL+EXTEND	. 2	NO	I2U
4	COUNT+CALL+EXTEND	. 2	NO	I2L
5	COUNT+CALL+EXTEND	. 2	NO	I3U
6	COUNT+CALL+EXTEND	. 2	NO	I3L
7	COUNT+CALL+EXTEND	. 2	NO	I4U
8	COUNT+CALL+EXTEND	. 2	NO	I4L
9	COUNT+CALL+EXTEND	. . 3	NO	I5U
10	COUNT+CALL+EXTEND	. . 3	NO	I5L
11	COUNT+CALL+EXTEND	. . . 4 . . .	NO	I6U
12	COUNT+CALL+EXTEND	. . . 4 . . .	NO	I6L
13	COUNT+CALL+EXTEND	. . . 4 . . .	NO	I7U
14	COUNT+CALL+EXTEND	. . . 4 . . .	NO	I7L
15	COUNT+CALL+EXTEND	. . 3	NO	I8U
16	COUNT+CALL+EXTEND	. . 3	NO	I8L
17	COUNT+CALL+EXTEND	1	NO	I9U
18	COUNT+CALL+EXTEND	1	NO	I9L
19	COUNT+CALL+EXTEND	. 2	NO	I10U
20	COUNT+CALL+EXTEND	. . . 4 . . .	NO	I10L
21	COUNT+CALL+EXTEND	. . . . 5 . .	NO	J1U
22	COUNT+CALL+EXTEND	. . . . 5 . .	NO	J1L
23	COUNT+CALL+EXTEND	. . . . . 6 .	NO	J2U
24	COUNT+CALL+EXTEND	. . . . . 6 .	NO	J2L
25	COUNT+CALL+EXTEND	. . . . . 6 .	NO	J3U
26	COUNT+CALL+EXTEND	. . . . . 6 .	NO	J3L
27	COUNT+CALL+EXTEND	. . . . . 6 .	NO	J4U
28	COUNT+CALL+EXTEND	. . . . . 6 .	NO	J4L
29	COUNT+CALL+EXTEND	. . 3	NO	J5U
30	COUNT+CALL+EXTEND	. . 3	NO	J5L
31	COUNT+CALL+EXTEND	. . . 4 . . .	NO	J6U
32	COUNT+CALL+EXTEND	. . . 4 . . .	NO	J6L
33	COUNT+CALL+EXTEND	. . . 4 . . .	NO	J7U
34	COUNT+CALL+EXTEND	. . . 4 . . .	NO	J7L
35	COUNT+CALL+EXTEND	. . 3	NO	J8U
36	COUNT+CALL+EXTEND	 8	NO	J8L
37	COUNT+CALL+EXTEND	. . . . 5 . .	NO	J9U
38	COUNT+CALL+EXTEND	. . . . 5 . .	NO	J9L
39	COUNT+CALL+EXTEND	. . . . . 6 .	NO	J10U
40	COUNT+CALL+EXTEND	 8	NO	J10L
41	PEDESTRIAN	. 2	NO	I 12U
42	PEDESTRIAN	. . . . . 7 .	NO	I 12L
43	PEDESTRIAN	. . . . . 6 . .	NO	I 13U
44	PEDESTRIAN	. . . . . 6 . .	NO	I 13L

Detector Configuration (5-2)				
Det	Delay	Extend	Recall	Port
1			10	3.2
2			10	7.2
3			10	1.1
4			10	1.5
5			10	4.5
6			10	6.2
7			10	2.1
8			10	7.4
9			10	3.4
10			10	7.6
11			10	1.3
12			10	1.7
13			10	4.7
14			10	6.4
15			10	2.3
16			10	7.8
17			10	3.6
18			10	3.8
19			10	4.1
20			10	4.2
21			10	3.1
22			10	7.1
23			10	1.2
24			10	1.6
25			10	4.6
26			10	6.3
27			10	2.2
28			10	7.3
29			10	3.3
30			10	7.5
31			10	1.4
32			10	1.8
33			10	4.8
34			10	6.5
35			10	2.4
36			10	7.7
37			10	3.5
38			10	3.7
39			10	4.3
40			10	4.4
41			10	5.1
42			10	5.3
43			10	5.2
44			10	5.4

Failure Times(5-3)	Minutes
Maximum On Time	
Fail Reset Time	

Failure Override (5-4)	
Detectors 1-8	. . . . .
Detectors 9-16	. . . . .
Detectors17-24	. . . . .
Detectors 25-32	. . . . .
Detectors 33-40	. . . . .
Detectors 41-44	. . . . .

System Detector Assignment (5-5)

Sys Det	1	2	3	4	5	6	7	8
Det Nu								
Sys Det	9	10	11	12	13	14	15	16
Det Nu								

CIC Operation (5-6-1)	
Enable in Plans	. . . . .

CIC Values (5-6-2)	Volume	Occupancy	Demand
Smoothing	0.66	0.66	0.66
Multiplier	4.0	0.33	
Exponent	0.50	1.00	

Detector-to-Phase Assignment (5-6-3)

Sys Det	1	2	3	4	5	6	7	8
Phase								
Sys Det	9	10	11	12	13	14	15	16
Phase								

Input File Port-Bit Assignments

332 Cabinet - For Reference Only

	1	2	3	4	5	6	7	8	9	10	11	12	13	14
I-	3.2	1.1	4.5	2.1	3.4	1.3	4.7	2.3	3.6	4.1	6.6	5.1	5.2	6.7
	7.2	1.5	6.2	7.4	7.6	1.7	6.4	7.8	3.8	4.2	2.7	5.3	5.4	6.8
J-	3.1	1.2	4.6	2.2	3.3	1.4	4.8	2.4	3.5	4.3	2.8	5.5	5.6	2.5
	7.1	1.6	6.3	7.3	7.5	1.8	6.5	7.7	3.7	4.4	6.1	5.7	5.8	2.6

TOD SCHEDULE

Table 1 (8-2-1) *		
Time	Plan	OS
0500	1	A
1000	1	B
1500	1	C
2100	255	A
		A
		A
		A
		A
		A
		A
		A
		A
		A
		A
		A
		A
		A

Table 2 (8-2-2)		
Time	Plan	OS
		A
		A
		A
		A
		A
		A
		A
		A
		A
		A
		A
		A
		A
		A
		A
		A
		A

Table 3 (8-2-3)		
Time	Plan	OS
		A
		A
		A
		A
		A
		A
		A
		A
		A
		A
		A
		A
		A
		A
		A
		A
		A

Table 4 (8-2-4)		
Time	Plan	OS
		A
		A
		A
		A
		A
		A
		A
		A
		A
		A
		A
		A
		A
		A
		A
		A
		A

Table 5 (8-2-5)		
Time	Plan	OS
		A
		A
		A
		A
		A
		A
		A
		A
		A
		A
		A
		A
		A
		A
		A
		A
		A

Table 6 (8-2-6)		
Time	Plan	OS
		A
		A
		A
		A
		A
		A
		A
		A
		A
		A
		A
		A
		A
		A
		A
		A
		A

WEEKDAY ASSIGNMENT

Weekday Table Assignments (8-2-7)						
Mon	Tue	Wed	Thu	Fri	Sat	Sun
1	1	1	1	1	2	2

HOLIDAY TABLES

Floating Holiday Table (8-2-8)

#	Mnth	Week	DOW	Table
1			.....	
2			.....	
3			.....	
4			.....	
5			.....	
6			.....	
7			.....	
8			.....	
9			.....	
10			.....	
11			.....	
12			.....	
13			.....	
14			.....	
15			.....	
16			.....	

Fixed Holiday Table (8-2-9)

#	Mnth	Day	DOW	Table
1			.....	
2			.....	
3			.....	
4			.....	
5			.....	
6			.....	
7			.....	
8			.....	
9			.....	
10			.....	
11			.....	
12			.....	
13			.....	
14			.....	
15			.....	
16			.....	

Solar Clock Data (8-4)

North Latitude	34
West Longitude	118
Local Time Zone	8

Sabbatical Clock (8-5)

Hebrew	Ped Recall
Sabbath	.....
Holiday	.....

Daylight Saving (8-6)

Enabled	YES

TOD FUNCTIONS

TOD Functions (8-3)

#	Start	End	DOW	Action	Phases
1			.....		.....
2			.....		.....
3			.....		.....
4			.....		.....
5			.....		.....
6			.....		.....
7			.....		.....
8			.....		.....
9			.....		.....
10			.....		.....
11			.....		.....
12			.....		.....
13			.....		.....
14			.....		.....
15			.....		.....
16			.....		.....

Action Codes:

0. None
1. Permitted
2. Restricted
4. Veh Min Recall
5. Veh Max Recall
6. Ped Recall
7. Bike Recall
8. Red Lock
9. Yellow Lock
10. Force/Max Lock
11. Double Entry
12. Y-Coord C
13. Y-Coord D
14. Free
15. Flashing
16. Walk 2
17. Max Green 2
18. Max Green 3
19. Rest in Walk
20. Rest in Red
21. Free Lag Phases
22. Special Functions
23. Truck Preempt
24. Conditional Service
25. Conditional Service
26. Leading Ped
27. Traffic Actuated Max 2
41. Protected Permissive
42. Protected Permissive

Action Code = Phases added to normal setting

100+Action Code = Phases removed

200+Action Code = Phases replaced

COMMUNICATIONS

C2 (6-1-1)	*
Address	3
Protocol	AB3418
Limit Access	
Baud	1200
Parity	NONE
Data Bits	8
Stop Bits	1
RTS On Time	20
RTS Off Time	20
Handshaking	NORMAL

C20 (6-1-2)	
Address	
Protocol	AB3418
Limit Access	
Baud	1200
Parity	NONE
Data Bits	8
Stop Bits	1
RTS On Time	20
RTS Off Time	20
Handshaking	NORMAL

C21 (6-1-3)	
Address	
Protocol	AB3418
Limit Access	
Baud	1200
Parity	NONE
Data Bits	8
Stop Bits	1
RTS On Time	20
RTS Off Time	20
Handshaking	NORMAL

Limit Access:

0-None
1-Status Only
2-Status, Set Pattern, Time
3-Status, Set Pattern, Time, Manual Plan

SOFT LOGIC

Soft Logic (6-2)

#	Data	OP	Data	OP	Data	OP	Data
1							
2							
3							
4							
5							
6							
7							
8							
9							
10							
11							
12							
13							
14							
15							
16							

*Refer to User's Manual for Data and OP Codes

CALLBACK NUMBERS

Callback Numbers (6-3...3)

Line Out	
Local Toll	
Long Distance	
Delay	10
Area Code	
Phone Number	

Line Out	
Local Toll	
Long Distance	
Delay	10
Area Code	
Phone Number	

Line Out	
Local Toll	
Long Distance	
Delay	10
Area Code	
Phone Number	

NETWORK

Network (6-4)

Address	
Protocol	AB3418
Port	27000
IP Mode	STATIC

IP Address	0 . 0 . 0 . 0
Netmask	255 . 255 . 255 . 0
Broadcast	0 . 0 . 0 . 254
Gateway	0 . 0 . 0 . 1

RAILROAD PREEMPTION

RR 1

(3-1-1)	Timing	Phase Flags (3-1-2)			Pedestrian Flags (3-1-3)			Overlap Flags (3-1-4)		
Delay		Grn Hold	Yel Flash	Red Flash	Walk	Flash DW	Solid DW	Grn Hold	Yel Flash	Red Flash
Clear 1	10	. 2 . . 5 . . .	. . . .	. . . .	. . . .	. . . .	. 2 . 4 . 6 . 8	. . . . . .	. . . . . .	. . . . . .
Clear 2		. . . .	. . . .	. . . .	. . . .	. . . .	. . . .	. . . . . .	. . . . . .	. . . . . .
Clear 3		. . . .	. . . .	. . . .	. . . .	. . . .	. . . .	. . . . . .	. . . . . .	. . . . . .
Hold		. . . .	. . . .	1 2 3 4 5 6 7 8	. . . .	. . . .	. . . .	. . . . . .	. . . . . .	A B C D E F
Exit	5									
Min Grn										
Ped Clr										

Exit Parameters (3-1-5)			
Phase Green	Overlap Green	Vehicle Recall	Ped Call
. . . .	. . . . . .	1 2 3 4 5 6 7 8	. 2 . 4 . 6 . 8

Configuration (3-1-6)			
Port	Gate Port	Latching	Power-Up
2.5	0.0	YES	FLASHING

RR 2

(3-2-1)	Timing	Phase Flags (3-2-2)			Pedestrian Flags (3-2-3)			Overlap Flags (3-2-4)		
Delay		Grn Hold	Yel Flash	Red Flash	Walk	Flash DW	Solid DW	Grn Hold	Yel Flash	Red Flash
Clear 1	10	. . . 4 . . 7 .	. . . .	. . . .	. . . .	. . . .	. 2 . 4 . 6 . 8	. . . . . .	. . . . . .	. . . . . .
Clear 2		. . . .	. . . .	. . . .	. . . .	. . . .	. . . .	. . . . . .	. . . . . .	. . . . . .
Clear 3		. . . .	. . . .	. . . .	. . . .	. . . .	. . . .	. . . . . .	. . . . . .	. . . . . .
Hold		1 2 3 . . 6 . .	. . . .	. . . .	. 2 . . . 6 . .	. . . .	. . . 4 . . . 8	. . . . . .	. . . . . .	. . . . . .
Exit										
Min Grn										
Ped Clr										

Exit Parameters (3-2-5)			
Phase Green	Overlap Green	Vehicle Recall	Ped Recall
. . . .	. . . . . .	. . . 4 . . 7 .	. . . .

Configuration (3-2-6)			
Port	Gate Port	Latching	Power-up
2.6	0.0	YES	DARK

EMERGENCY VEHICLE PREEMPTION

EVA (3-A)

Preempt Timers			Phase Green	Overlap Green
Delay	Clear	Max		
	30	30	. 2 . . 5 . . .	. . . . . .

Port	Latching	Phase Termination
5.5	NO	ADVANCE

EVB (3-B)

Preempt Timers			Phase Green	Overlap Green
Delay	Clear	Max		
	30	30	. . . 4 . . 7 .	. . . . . .

Port	Latching	Phase Termination
5.6	NO	ADVANCE

EVC (3-C)

Preempt Timers			Phase Green	Overlap Green
Delay	Clear	Max		
	30	30	1 . . . . 6 . .	. . . . . .

Port	Latching	Phase Termination
5.7	NO	ADVANCE

EVD (3-D)

Preempt Timers			Phase Green	Overlap Green
Delay	Clear	Max		
	30	30	. . 3 8	. . . . . .

Port	Latching	Phase Termination
5.8	NO	ADVANCE

INPUTS

		7 Wire I/C (2-1-5-1)			
		Input	Port	Input	Port
Enable	NO	R1	3.8	Free	3.6
Max ON		R2	3.5	D2	2.8
Max OFF		R3	3.7	D3	6.1

Manual Control (2-1-5-2)	
Input	Port
Manual Advance	6.6
Advance Enable	6.6

Cabinet Status (2-1-5-3)	
Input	Port
Flash Bus	
Door Ajar	
Flash Sense	6.7
Stop Time	6.8

Special Function (2-1-5-4)	
Input	Port
1	
2	
3	
4	

Battery Backup (2-1-5-5) *	
Port	Operation
2.7	FLASHING

Y-Coordination (2-1-5-6)	
Port C	Port D
6.1	2.8

OUTPUTS

Loadswitch Assignments (2-1-6) +							
A	1	2	22	3	4	24	9
B	5	6	26	7	8	28	10
X	13	14	0	11	12	0	0

Loadswitch Codes:

0 Unused (no output)
1-8 Vehicle 1-8
9-14 Overlap A-F
21-28 Ped 1-8
41-47 Special Functions
41 Protected Permissive Flashing Phase 1
43 Protected Permissive Flashing Phase 3
45 Protected Permissive Flashing Phase 5
47 Protected Permissive Flashing Phase 7
51-57 Special Functions
71-72 Seven Wire I/C

+ middle output of loadswitches 3 and 6 Channel 9 and 10

YELLOW YIELD COORDINATION

					Force-Offs											
Y-Coord Plans (7-C,D)	Long Grn	No Grn	Offset	Perm	-1-	-2-	-3-	-4-	-5-	-6-	-7-	-8-	Coord	Lag	Min Recall	Restricted
Plan C													. 2 . . . 6 . .	. 2 . 4 . 6 . 8	. . . . .	. . . . .
Plan D													. 2 . . . 6 . .	. 2 . 4 . 6 . 8	. . . . .	. . . . .

TRANSIT PRIORITY

Local Plans (3-E) 1...9 11...19		Early Green	Green Extend	Inhibit Cycles	Phase 1 Minimum	Phase 2 Minimum	Phase 3 Minimum	Phase 4 Minimum	Phase 5 Minimum	Phase 6 Minimum	Phase 7 Minimum	Phase 8 Minimum
Plan 1	Green Factor											
Plan 2	Green Factor											
Plan 3	Green Factor											
Plan 4	Green Factor											
Plan 5	Green Factor											
Plan 6	Green Factor											
Plan 7	Green Factor											
Plan 8	Green Factor											
Plan 9	Green Factor											
Plan 11	Green Factor											
Plan 12	Green Factor											
Plan 13	Green Factor											
Plan 14	Green Factor											
Plan 15	Green Factor											
Plan 16	Green Factor											
Plan 17	Green Factor											
Plan 18	Green Factor											
Plan 19	Green Factor											

Transit Priority Configuration (3-E-A)				Indicator Output	
Enable in Plans		Input	Type	Stop	Go
Plan 1-9	. . . . .	0.0	OPT	0	0
Plan 11-19	. . . . .	0.0	OPT	0	0

Queue Jump (3-E-B)	
Grn Hold	Hold Phase
	. . . . .
	. . . . .

Free Plans (3-E-E)	
Max Grn Hold	Hold Phase
	. . . . .

Access Utilities (9-5)	
Password	***
Timeout	30

TRUCK PRIORITY

Truck Priority (3-F)	Passage	CarryOver	Clearance	Next Priority	Phase Green	Det 2 Port	Det 3 Port	Det 4 Port	Sign Output	Slave Input	Slave Output
					. . . . .	0.0	0.0	0.0	0	0.0	0

```
ÉÍÍÍÍÍÍÍÍÍÍÍÍÍÍÍÍÍÍÍÍÍÍÍÍÍÍÍÍÍÍÍÍÍÍÍÍÍÍÍÍÍÍ»
º**************************************º
º*   ECONOLITE CONTROL PRODUCTS, INC.   *º
º*             ASC/2-2100               *º
º*          Copyright (C) 1992          *º
º*                                      *º
º*      Solving tomorrow's traffic      *º
º*          problems... today           *º
º*                                      *º
º*   SOFTWARE ASSY             VERSION  *º
º*   BOOT            32783        1.28  *º
º*   MAIN PROGRAM    34556        1.80  *º
º*   HELP            32789        1.64  *º
º*   CONFIGURATION   32791 (32K) C8190E *º
º*                                      *º
º*                                      *º
º**************************************º
ÈÍÍÍÍÍÍÍÍÍÍÍÍÍÍÍÍÍÍÍÍÍÍÍÍÍÍÍÍÍÍÍÍÍÍÍÍÍÍÍÍÍÍ¼

ÉÍÍÍÍÍÍÍÍÍÍÍÍÍÍÍÍÍÍÍÍÍÍÍÍÍÍÍÍÍÍÍÍÍÍÍÍÍÍÍÍÍÍ»
º           CONTROLLER SEQUENCE          º
º                                        º
º    ------------ PRIORITY ------------   º
º                                1  1  1   º
º    1..2..3..4..5..6..7..8..9..0..1..2   º
ºR1  1  2| 3  4| 9 10| 0  0  0  0  0  0   º
ºR2  5  6| 7  8|11 12| 0  0  0  0  0  0   º
ºCG   .  ^  .  ^  .  ^  .  .  .  .  .  .   º
º                                        º
º                                        º
ºR1,R2 = RING 1 AND 2 PHASE ASSIGNMENT.    º
º                                        º
ºCG    = BARRIER LOCATION BETWEEN          º
º        CONCURRENT PHASE TIMING GROUPS.   º
º                                        º
ºEND OF SUBMENU                          º
ÈÍÍÍÍÍÍÍÍÍÍÍÍÍÍÍÍÍÍÍÍÍÍÍÍÍÍÍÍÍÍÍÍÍÍÍÍÍÍÍÍÍÍ¼

ÉÍÍÍÍÍÍÍÍÍÍÍÍÍÍÍÍÍÍÍÍÍÍÍÍÍÍÍÍÍÍÍÍÍÍÍÍÍÍÍÍÍÍ»
º              PHASES IN USE             º
º                                        º
º                  ----- PHASE NUMBER ----º
º                                  1 1 1º
º                  1 2 3 4 5 6 7 8 9 0 1 2º
ºPHASES IN USE     X X X X X X X X . . . .º
ºEXCLUSIVE PED     . . . . . . . . . . . .º
º                                        º
º                                        º
º                                        º
º                                        º
º                                        º
º                                        º
º                                        º
º                                        º
º                                        º
ºEND OF SUBMENU                          º
ÈÍÍÍÍÍÍÍÍÍÍÍÍÍÍÍÍÍÍÍÍÍÍÍÍÍÍÍÍÍÍÍÍÍÍÍÍÍÍÍÍÍÍ¼

ÉÍÍÍÍÍÍÍÍÍÍÍÍÍÍÍÍÍÍÍÍÍÍÍÍÍÍÍÍÍÍÍÍÍÍÍÍÍÍÍÍÍÍ»
ºPHASE TO LOAD SWITCH (MMU) ASSIGNMENT   º
º                                        º
ºLOAD       SIGNAL    LOAD       SIGNAL  º
ºSWITCH     DRIVER    SWITCH     DRIVER  º
```

```
º(MMU)      GROUP     (MMU)      GROUP   º
ºCHANNEL PH/OLAP PED  CHANNEL PH/OLAP PEDº
º   1       1     .     9       2     X º
º   2       2     .    10       4     X º
º   3       3     .    11       6     X º
º   4       4     .    12       8     X º
º   5       5     .    13       0     . º
º   6       6     .    14       0     . º
º   7       7     .    15       0     . º
º   8       8     .    16       0     . º
ºENTER 13-16 FOR OVERLAPS A-D            º
ºEND OF SUBMENU                          º
ÈÍÍÍÍÍÍÍÍÍÍÍÍÍÍÍÍÍÍÍÍÍÍÍÍÍÍÍÍÍÍÍÍÍÍÍÍÍÍÍÍ¼

ÉÍÍÍÍÍÍÍÍÍÍÍÍÍÍÍÍÍÍÍÍÍÍÍÍÍÍÍÍÍÍÍÍÍÍÍÍÍÍÍÍ»
º          SDLC OPTIONS/ENABLES          º
º                                        º
º                 ----- BIU NUMBER ----- º
º                1..2..3..4..5..6..7..8 º
ºTERM & FACIL...  .  .  .  .  .  .  .  . º
ºDETECTOR RACK..  .  .  .  .  .  .  .  . º
º                                        º
ºTYPE 2 RUNS AS TYPE 1.................. . º
ºMMU DISABLE............................ X º
ºDIAGNOSTIC ENABLE (TEST FIXTURE)..... . º
ºPEER TO PEER ENABLE.................... . º
º                                        º
ºPEER TO PEER ADDRESSES:                 º
º1) 255  2) 255  3) 255  4) 255   5) 255 º
º6) 255  7) 255  8) 255  9) 255  10) 255 º
ºEND OF SUBMENU                          º
ÈÍÍÍÍÍÍÍÍÍÍÍÍÍÍÍÍÍÍÍÍÍÍÍÍÍÍÍÍÍÍÍÍÍÍÍÍÍÍÍÍ¼

ÉÍÍÍÍÍÍÍÍÍÍÍÍÍÍÍÍÍÍÍÍÍÍÍÍÍÍÍÍÍÍÍÍÍÍÍÍÍÍÍÍ»
º         PORT2 CONFIGURATION            º
º                                        º
ºPORT2 PROTOCOL.................  TERMNL  º
ºPORT2 ENABLE..................     YES  º
º                                        º
ºDATA RATE (BPS)................   19.2k  º
ºDATA, PARITY, STOP............ 8, N, 1  º
º                                        º
ºAB3418 ADDRESS.................       0  º
ºAB3418 GROUP ADDRESS..........        0  º
ºAB3418 RESPONSE DELAY.........        0  º
ºAB3418 SINGLE FLAG ENABLE.....       NO  º
ºAB3418 DROP-OUT TIME..........        0  º
ºAB3418 TOD SF SELECT..........        0  º
º                                        º
ºADDITIONAL SCREEN(S)                    º
ÈÍÍÍÍÍÍÍÍÍÍÍÍÍÍÍÍÍÍÍÍÍÍÍÍÍÍÍÍÍÍÍÍÍÍÍÍÍÍÍÍ¼

ÉÍÍÍÍÍÍÍÍÍÍÍÍÍÍÍÍÍÍÍÍÍÍÍÍÍÍÍÍÍÍÍÍÍÍÍÍÍÍÍÍ»
º         PORT2 CONFIGURATION            º
º                                        º
ºAB3418 RTS TIMING.............       NO  º
ºAB3418 RTS TO CTS DELAY.......        0  º
ºAB3418 RTS TURN-OFF DELAY.....        0  º
ºAB3418 EARLY RTS..............       NO  º
º                                        º
º                                        º
º                                        º
º                                        º
```

♀

```
º                                        º
º                                        º
º                                        º
º                                        º
º                                        º
ºEND OF SUBMENU                          º
ÈÍÍÍÍÍÍÍÍÍÍÍÍÍÍÍÍÍÍÍÍÍÍÍÍÍÍÍÍÍÍÍÍÍÍÍÍÍ¼

ÉÍÍÍÍÍÍÍÍÍÍÍÍÍÍÍÍÍÍÍÍÍÍÍÍÍÍÍÍÍÍÍÍÍÍÍÍÍ»
º         PORT3 CONFIGURATION            º
º                                        º
ºPORT3 PROTOCOL.................   TELEM  º
ºPORT3 ENABLE...................      NO  º
ºPORT3 MILLISEC TIMING..........      NO  º
ºPORT3 RTS TO CTS DELAY.........       0  º
ºPORT3 RTS TURN-OFF DELAY......        0  º
º                                        º
ºDUPLEX -- HALF or FULL.........    FULL  º
ºMODEM DATA RATE (BPS)..........    1200  º
ºDATA, PARITY, STOP............. 8, O, 1  º
º                                        º
ºTELEMETRY ADDRESS..............       1  º
ºSYSTEM DETECTOR 9-16 ADDRESS...       0  º
ºTELEMETRY RESPONSE DELAY......    8000  º
ºADDITIONAL SCREEN(S)                    º
ÈÍÍÍÍÍÍÍÍÍÍÍÍÍÍÍÍÍÍÍÍÍÍÍÍÍÍÍÍÍÍÍÍÍÍÍÍÍ¼

ÉÍÍÍÍÍÍÍÍÍÍÍÍÍÍÍÍÍÍÍÍÍÍÍÍÍÍÍÍÍÍÍÍÍÍÍÍÍ»
º         PORT3 CONFIGURATION            º
º                                        º
ºAB3418 ADDRESS.................       0  º
ºAB3418 GROUP ADDRESS...........       0  º
ºAB3418 RESPONSE DELAY..........       0  º
ºAB3418 SINGLE FLAG ENABLE.....      NO  º
ºAB3418 DROP-OUT TIME...........       0  º
ºAB3418 TOD SF SELECT...........       0  º
ºAB3418 EARLY RTS...............      NO  º
º                                        º
º           RICOCHET OPTION              º
ºRICOCHET ADDRESS...............       0  º
ºAUTO STATUS DESTINATION ADDR...       0  º
ºAUTO STATUS REPORT DELAY......        0  º
ºicons LIVE TIME................       0  º
ºEND OF SUBMENU                          º
ÈÍÍÍÍÍÍÍÍÍÍÍÍÍÍÍÍÍÍÍÍÍÍÍÍÍÍÍÍÍÍÍÍÍÍÍÍÍ¼

ÉÍÍÍÍÍÍÍÍÍÍÍÍÍÍÍÍÍÍÍÍÍÍÍÍÍÍÍÍÍÍÍÍÍÍÍÍÍ»
º            ENABLE EVENT LOGS           º
º                                        º
ºCRITICAL RFE'S (MMU/TF) . . . . . .   X º
ºNON-CRITICAL RFE'S (DET/TEST) . . .   X º
ºDETECTOR ERRORS . . . . . .   X º
ºCOORDINATION ERRORS . . . . . .   X º
ºMMU FLASH FAULTS  . . . . . .   X º
ºLOCAL FLASH FAULTS  . . . . . .   X º
ºPREEMPT . . . . . .   X º
ºPOWER ON/OFF  . . . . . .   X º
ºLOW BATTERY . . . . . .   X º
ºSPARE . . . . . .   . º
ºALARM 1 . . . . . .   X º
ºALARM 2 . . . . . .   X º
ºALARM 3 . . . . . .   X º
ºADDITIONAL SCREEN(S)                    º
```

```
ÈÍÍÍÍÍÍÍÍÍÍÍÍÍÍÍÍÍÍÍÍÍÍÍÍÍÍÍÍÍÍÍÍÍÍÍÍÍÍÍÍÍÍÍÍÍ¼

ÉÍÍÍÍÍÍÍÍÍÍÍÍÍÍÍÍÍÍÍÍÍÍÍÍÍÍÍÍÍÍÍÍÍÍÍÍÍÍÍÍÍÍÍÍÍ»
º            ENABLE EVENT LOGS                        º
º                                                     º
ºALARM 4 . . . . . .   X º
ºALARM 5 . . . . . .   . º
ºALARM 6 . . . . . .   . º
ºALARM 7 . . . . . .   . º
ºALARM 8 . . . . . .   . º
ºALARM 9 . . . . . .   . º
ºALARM 10  . . . . . .   . º
ºALARM 11  . . . . . .   . º
ºALARM 12  . . . . . .   . º
ºALARM 13  . . . . . .   . º
ºALARM 14  . . . . . .   . º
ºALARM 15  . . . . . .   . º
ºALARM 16  . . . . . .   . º
ºEND OF SUBMENU                                       º
ÈÍÍÍÍÍÍÍÍÍÍÍÍÍÍÍÍÍÍÍÍÍÍÍÍÍÍÍÍÍÍÍÍÍÍÍÍÍÍÍÍÍÍÍÍÍ¼

ÉÍÍÍÍÍÍÍÍÍÍÍÍÍÍÍÍÍÍÍÍÍÍÍÍÍÍÍÍÍÍÍÍÍÍÍÍÍÍÍÍÍÍÍÍÍ»
º                  OPTIONS                            º
º                                                     º
º                                                     º
º                                                     º
ºSUPERVISOR ACCESS CODE..... 0000                     º
º                                                     º
ºDATA CHANGE ACCESS CODE..... 0000                    º
º                                                     º
ºKEY CLICK ENABLE.............  YES                    º
º                                                     º
ºBACKLIGHT ENABLE.............  YES                    º
º                                                     º
º                                                     º
º                                                     º
º                                                     º
ºEND OF SUBMENU                                       º
ÈÍÍÍÍÍÍÍÍÍÍÍÍÍÍÍÍÍÍÍÍÍÍÍÍÍÍÍÍÍÍÍÍÍÍÍÍÍÍÍÍÍÍÍÍÍ¼

♀

ÉÍÍÍÍÍÍÍÍÍÍÍÍÍÍÍÍÍÍÍÍÍÍÍÍÍÍÍÍÍÍÍÍÍÍÍÍÍÍÍÍÍÍÍÍÍ»
º                MMU PROGRAM                          º
ºCAN SERVE WITH:                                      º
º           1 1 1 1 1 1 1                             º
ºCHANNEL    6 5 4 3 2 1 0 9 8 7 6 5 4 3 2º
º  1        . . . . . .   º
º  2        . . . . . .    º
º  3        . . . . . .     º
º  4        . . . . . .      º
º  5        . . . . . .       º
º  6        . . . . . .       º
º  7        . . . . . .       º
º  8        . . . . . .       º
º  9        . . . . . .       º
º 10        . . . . . .       º
º 11        . . . . . .       º
ºADDITIONAL SCREEN(S)                                 º
ÈÍÍÍÍÍÍÍÍÍÍÍÍÍÍÍÍÍÍÍÍÍÍÍÍÍÍÍÍÍÍÍÍÍÍÍÍÍÍÍÍÍÍÍÍÍ¼

ÉÍÍÍÍÍÍÍÍÍÍÍÍÍÍÍÍÍÍÍÍÍÍÍÍÍÍÍÍÍÍÍÍÍÍÍÍÍÍÍÍÍÍÍÍÍ»
º                MMU PROGRAM                          º
ºCAN SERVE WITH:                                      º
º           1 1 1 1 1 1 1                             º
```

```
ºCHANNEL    6 5 4 3 2 1 0 9 8 7 6 5 4 3 2º
º 12        . . . .                      º
º 13        . . .                        º
º 14        . .                          º
º 15        .                            º
º                                        º
º                                        º
º                                        º
º                                        º
º                                        º
º                                        º
º                                        º
º                                        º
ºEND OF SUBMENU                          º
ÈÍÍÍÍÍÍÍÍÍÍÍÍÍÍÍÍÍÍÍÍÍÍÍÍÍÍÍÍÍÍÍÍÍÍÍÍÍÍ¼

ÉÍÍÍÍÍÍÍÍÍÍÍÍÍÍÍÍÍÍÍÍÍÍÍÍÍÍÍÍÍÍÍÍÍÍÍÍÍÍ»
º****************************************º
º*   ECONOLITE CONTROL PRODUCTS, INC.   *º
º*            ASC/2-2100                *º
º*          Copyright (C) 1992          *º
º*                                      *º
º*      Solving tomorrow's traffic      *º
º*          problems... today           *º
º*                                      *º
º*   SOFTWARE ASSY             VERSION  *º
º*   BOOT            32783        1.28  *º
º*   MAIN PROGRAM    34556        1.80  *º
º*   HELP            32789        1.64  *º
º*   CONFIGURATION   32791 (32K) C8190E *º
º*                                      *º
º*                                      *º
º****************************************º
ÈÍÍÍÍÍÍÍÍÍÍÍÍÍÍÍÍÍÍÍÍÍÍÍÍÍÍÍÍÍÍÍÍÍÍÍÍÍÍ¼

ÉÍÍÍÍÍÍÍÍÍÍÍÍÍÍÍÍÍÍÍÍÍÍÍÍÍÍÍÍÍÍÍÍÍÍÍÍÍÍ»
º         CONTROLLER TIMING DATA         º
ºPHASE...   1...2...3...4...5...6...7...8º
ºMIN GRN.  11  11  10  10  11  11  10  10º
ºBIKE GRN  11  11  10  10  11  11  10  10º
ºCS MGRN.  10   0   5   0   5   0   5   0º
ºWALK....   0   6   0   0   0   6   0   0º
ºPED CLR.   0  39   0  16   0  39   0  16º
ºVEH EXT. 2.0 2.0 2.0 3.0 2.0 2.0 2.0 3.0º
ºVEH EXT2 0.0 0.0 0.0 0.0 0.0 0.0 0.0 0.0º
ºMAX EXT.   5  10   5   0   5  10   0   5º
ºMAX1....  20  35  20  20  20  35  20  20º
ºMAX2....  25  55  25  25  25  55  25  25º
ºMAX3....   0   0   0   0   0   0   0   0º
ºDET MAX.   0   0   0   0   0   0   0   0º
º                                        º
ºADDITIONAL SCREEN(S)              MORE->º
ÈÍÍÍÍÍÍÍÍÍÍÍÍÍÍÍÍÍÍÍÍÍÍÍÍÍÍÍÍÍÍÍÍÍÍÍÍÍÍ¼

ÉÍÍÍÍÍÍÍÍÍÍÍÍÍÍÍÍÍÍÍÍÍÍÍÍÍÍÍÍÍÍÍÍÍÍÍÍÍÍ»
º         CONTROLLER TIMING DATA         º
ºPHASE...   1...2...3...4...5...6...7...8º
ºYELLOW.. 5.5 5.5 4.5 4.5 4.5 5.5 4.5 4.5º
ºRED CLR. 2.0 2.0 2.0 2.0 2.0 2.0 2.0 2.0º
ºRED RVT. 2.0 2.0 2.0 2.0 2.0 2.0 2.0 2.0º
º                                        º
ºACT B4..   0   0   0   0   0   0   0   0º
ºSEC/ACT. 0.0 0.0 0.0 0.0 0.0 0.0 0.0 0.0º
ºMAX INI.   0   0   0   0   0   0   0   0º
```

```
ºTIME B4.   0  15   0  10   0  15   0  10º
ºCARS WT.   0   0   0   0   0   0   0   0º
ºTTREDUC.   0  20   0  15   0  20   0  15º
ºMIN GAP. 0.0 0.0 0.0 0.0 0.0 0.0 0.0 0.0º
º                                         º
º                                         º
ºEND OF SUBMENU                    MORE->º
ÈÍÍÍÍÍÍÍÍÍÍÍÍÍÍÍÍÍÍÍÍÍÍÍÍÍÍÍÍÍÍÍÍÍÍÍÍÍÍ¼

ÉÍÍÍÍÍÍÍÍÍÍÍÍÍÍÍÍÍÍÍÍÍÍÍÍÍÍÍÍÍÍÍÍÍÍÍÍÍÍ»
º         CONTROLLER TIMING DATA          º
ºPHASE...   9..10..11..12                 º
ºMIN GRN.   5   5   5   5                 º
ºBIKE GRN   0   0   0   0                 º
ºCS MGRN.   0   0   0   0                 º
ºWALK....   0  10   0  10                 º
ºPED CLR.   0  16   0  16                 º
ºVEH EXT. 5.0 5.0 5.0 5.0                 º
ºVEH EXT2 0.0 0.0 0.0 0.0                 º
ºMAX EXT.   0   0   0   0                 º
ºMAX1....  35  35  35  35                 º
ºMAX2....  40  40  40  40                 º
ºMAX3....   0   0   0   0                 º
ºDET MAX.   0   0   0   0                 º
º                                         º
ºADDITIONAL SCREEN(S)            <-MORE   º
ÈÍÍÍÍÍÍÍÍÍÍÍÍÍÍÍÍÍÍÍÍÍÍÍÍÍÍÍÍÍÍÍÍÍÍÍÍÍÍ¼

ÉÍÍÍÍÍÍÍÍÍÍÍÍÍÍÍÍÍÍÍÍÍÍÍÍÍÍÍÍÍÍÍÍÍÍÍÍÍÍ»
º         CONTROLLER TIMING DATA          º
ºPHASE...   9..10..11..12                 º
ºYELLOW.. 3.0 3.0 3.0 3.0                 º
ºRED CLR. 1.0 1.0 1.0 1.0                 º
ºRED RVT. 2.0 2.0 2.0 2.0                 º
º                                         º
ºACT B4..   0   0   0   0                 º
ºSEC/ACT. 0.0 0.0 0.0 0.0                 º
ºMAX INI.  30  30  30  30                 º
ºTIME B4.   0   0   0   0                 º
ºCARS WT.   0   0   0   0                 º
ºTTREDUC.   0   0   0   0                 º
ºMIN GAP. 0.0 0.0 0.0 0.0                 º
º                                         º
º                                         º
ºEND OF SUBMENU                  <-MORE   º
ÈÍÍÍÍÍÍÍÍÍÍÍÍÍÍÍÍÍÍÍÍÍÍÍÍÍÍÍÍÍÍÍÍÍÍÍÍÍÍ¼

ÉÍÍÍÍÍÍÍÍÍÍÍÍÍÍÍÍÍÍÍÍÍÍÍÍÍÍÍÍÍÍÍÍÍÍÍÍÍÍ»
º        PHASE OVERLAP ASSIGNMENTS        º
ºOVERLAP CONSISTS OF PHASES:        1 1 1º
ºOVLP PHASE       1 2 3 4 5 6 7 8 9 0 1 2º
º     1           X . . . . . . . . . . .º
º     2           . X . . . . . . . . . .º
º     3           . . X . . . . . . . . .º
º     4           . . . X . . . . . . . .º
º     5           . . . . X . . . . . . .º
º     6           . . . . . X . . . . . .º
º     7           . . . . . . X . . . . .º
º     8           . . . . . . . X . . . .º
º     9           . . . . . . . . X . . .º
º    10           . . . . . . . . . X . .º
º    11           . . . . . . . . . . X .º
º    12           . . . . . . . . . . . Xº
```

```
ºEND OF SUBMENU                                                 º
ÈÍÍÍÍÍÍÍÍÍÍÍÍÍÍÍÍÍÍÍÍÍÍÍÍÍÍÍÍÍÍÍÍÍÍÍÍÍÍÍÍÍÍÍÍÍÍÍÍÍÍÍÍÍÍ¼

ÉÍÍÍÍÍÍÍÍÍÍÍÍÍÍÍÍÍÍÍÍÍÍÍÍÍÍÍÍÍÍÍÍÍÍÍÍÍÍÍÍÍÍÍÍÍÍÍÍÍÍÍÍÍ»
º           PED TIMING CARRYOVER                                 º
º                                                                 º
º         PHASE       CARRYOVER PHASE                           º
º           1                 0                                   º
º           2                 0                                   º
º           3                 0                                   º
º           4                 0                                   º
º           5                 0                                   º
º           6                 0                                   º
º           7                 0                                   º
º           8                 0                                   º
º           9                 0                                   º
º          10                 0                                   º
º          11                 0                                   º
º          12                 0                                   º
ºEND OF SUBMENU                                                 º
ÈÍÍÍÍÍÍÍÍÍÍÍÍÍÍÍÍÍÍÍÍÍÍÍÍÍÍÍÍÍÍÍÍÍÍÍÍÍÍÍÍÍÍÍÍÍÍÍÍÍÍÍÍÍÍ¼

ÉÍÍÍÍÍÍÍÍÍÍÍÍÍÍÍÍÍÍÍÍÍÍÍÍÍÍÍÍÍÍÍÍÍÍÍÍÍÍÍÍÍÍÍÍÍÍÍÍÍÍÍÍÍ»
º          CONTROLLER RECALL DATA                               º
º                                                               º
ºPHASE:                                      1 1 1º
ºPHASE.....  1 2 3 4 5 6 7 8 9 0 1 2º
ºLOCKING MEMORY.  . . . . . . . . . . . .º
ºVEHICLE RECALL.  . X . . . X . . . . . .º
ºPED RECALL.....  . . . . . . . . . . . .º
ºRECALL TO MAX..  . . . . . . . . . . . .º
ºSOFT RECALL....  . . . . . . . . . . . .º
ºDON'T REST HERE  . . . . . . . . . . . .º
ºPED DARK N/CALL  . . . . . . . . . . . .º
º                                                               º
º                                                               º
º                                                               º
º                                                               º
ºEND OF SUBMENU                                                 º
ÈÍÍÍÍÍÍÍÍÍÍÍÍÍÍÍÍÍÍÍÍÍÍÍÍÍÍÍÍÍÍÍÍÍÍÍÍÍÍÍÍÍÍÍÍÍÍÍÍÍÍÍÍÍÍ¼

ÉÍÍÍÍÍÍÍÍÍÍÍÍÍÍÍÍÍÍÍÍÍÍÍÍÍÍÍÍÍÍÍÍÍÍÍÍÍÍÍÍÍÍÍÍÍÍÍÍÍÍÍÍÍ»
º          CONTROLLER OVERLAP DATA                              º
º                                                               º
º                                          1 1 1º
ºOVERLAP A.....   1 2 3 4 5 6 7 8 9 0 1 2º
ºSTANDARD......   . . . . . . . . . . . .º
ºPROTECTED.....   . . . . . . . . . . . .º
ºPERMITTED.....   . . . . . . . . . . . .º
ºENABLE LAG....   . . . . . . . . . . . .º
ºENABLE LEAD...   . . . . . . . . . . . .º
ºSPARE.........   . . . . . . . . . . . .º
º                                                               º
º     ADVANCE GREEN TIMER      0.0                              º
º     LAG/LEAD GREEN TIMER     0.0                              º
º     LAG/LEAD YELLOW TIMER    0.0                              º
º     LAG/LEAD RED TIMER       0.0                              º
ºADDITIONAL PAGE(S)                                             º
ÈÍÍÍÍÍÍÍÍÍÍÍÍÍÍÍÍÍÍÍÍÍÍÍÍÍÍÍÍÍÍÍÍÍÍÍÍÍÍÍÍÍÍÍÍÍÍÍÍÍÍÍÍÍÍ¼

ÉÍÍÍÍÍÍÍÍÍÍÍÍÍÍÍÍÍÍÍÍÍÍÍÍÍÍÍÍÍÍÍÍÍÍÍÍÍÍÍÍÍÍÍÍÍÍÍÍÍÍÍÍÍ»
º          CONTROLLER OVERLAP DATA                              º
º                                                               º
```

```
º                                        1 1 1º
ºOVERLAP B.....   1 2 3 4 5 6 7 8 9 0 1 2º
ºSTANDARD......   . . . . . . . . . . . .º
ºPROTECTED.....   . . . . . . . . . . . .º
ºPERMITTED.....   . . . . . . . . . . . .º
ºENABLE LAG....   . . . . . . . . . . . .º
ºENABLE LEAD...   . . . . . . . . . . . .º
ºSPARE.........   . . . . . . . . . . . .º
º                                         º
º     ADVANCE GREEN TIMER      0.0        º
º     LAG/LEAD GREEN TIMER     0.0        º
º     LAG/LEAD YELLOW TIMER    0.0        º
º     LAG/LEAD RED TIMER       0.0        º
ºADDITIONAL PAGE(S)                       º
ÈÍÍÍÍÍÍÍÍÍÍÍÍÍÍÍÍÍÍÍÍÍÍÍÍÍÍÍÍÍÍÍÍÍÍÍÍÍÍÍÍÍ¼

ÉÍÍÍÍÍÍÍÍÍÍÍÍÍÍÍÍÍÍÍÍÍÍÍÍÍÍÍÍÍÍÍÍÍÍÍÍÍÍÍÍÍ»
º         CONTROLLER OVERLAP DATA         º
º                                         º
º                                        1 1 1º
ºOVERLAP C.....   1 2 3 4 5 6 7 8 9 0 1 2º
ºSTANDARD......   . . . . . . . . . . . .º
ºPROTECTED.....   . . . . . . . . . . . .º
ºPERMITTED.....   . . . . . . . . . . . .º
ºENABLE LAG....   . . . . . . . . . . . .º
ºENABLE LEAD...   . . . . . . . . . . . .º
ºSPARE.........   . . . . . . . . . . . .º
º                                         º
º     ADVANCE GREEN TIMER      0.0        º
º     LAG/LEAD GREEN TIMER     0.0        º
º     LAG/LEAD YELLOW TIMER    0.0        º
º     LAG/LEAD RED TIMER       0.0        º
ºADDITIONAL PAGE(S)                       º
ÈÍÍÍÍÍÍÍÍÍÍÍÍÍÍÍÍÍÍÍÍÍÍÍÍÍÍÍÍÍÍÍÍÍÍÍÍÍÍÍÍÍ¼

ÉÍÍÍÍÍÍÍÍÍÍÍÍÍÍÍÍÍÍÍÍÍÍÍÍÍÍÍÍÍÍÍÍÍÍÍÍÍÍÍÍÍ»
º         CONTROLLER OVERLAP DATA         º
º                                         º
º                                        1 1 1º
ºOVERLAP D.....   1 2 3 4 5 6 7 8 9 0 1 2º
ºSTANDARD......   . . . . . . . . . . . .º
ºPROTECTED.....   . . . . . . . . . . . .º
ºPERMITTED.....   . . . . . . . . . . . .º
ºENABLE LAG....   . . . . . . . . . . . .º
ºENABLE LEAD...   . . . . . . . . . . . .º
ºSPARE.........   . . . . . . . . . . . .º
º                                         º
º     ADVANCE GREEN TIMER      0.0        º
º     LAG/LEAD GREEN TIMER     0.0        º
º     LAG/LEAD YELLOW TIMER    0.0        º
º     LAG/LEAD RED TIMER       0.0        º
ºADDITIONAL PAGE(S)                       º
ÈÍÍÍÍÍÍÍÍÍÍÍÍÍÍÍÍÍÍÍÍÍÍÍÍÍÍÍÍÍÍÍÍÍÍÍÍÍÍÍÍÍ¼

ÉÍÍÍÍÍÍÍÍÍÍÍÍÍÍÍÍÍÍÍÍÍÍÍÍÍÍÍÍÍÍÍÍÍÍÍÍÍÍÍÍÍ»
º        PED OVERLAP ASSIGNMENTS          º
ºOVERLAP CONSISTS OF PHASES:        1 1 1º
ºOVLP PHASE       1 2 3 4 5 6 7 8 9 0 1 2º
º     1           . . . . . . . . . . . .º
º     2           . . . . . . . . . . . .º
º     3           . . . . . . . . . . . .º
º     4           . . . . . . . . . . . .º
º     5           . . . . . . . . . . . .º
```

```
º     6           . . . . . . . . . . . .º
º     7           . . . . . . . . . . . .º
º     8           . . . . . . . . . . . .º
º     9           . . . . . . . . . . . .º
º    10           . . . . . . . . . . . .º
º    11           . . . . . . . . . . . .º
º    12           . . . . . . . . . . . .º
ºEND OF SUBMENU                          º
ÈÍÍÍÍÍÍÍÍÍÍÍÍÍÍÍÍÍÍÍÍÍÍÍÍÍÍÍÍÍÍÍÍÍÍÍÍÍÍ¼

ÉÍÍÍÍÍÍÍÍÍÍÍÍÍÍÍÍÍÍÍÍÍÍÍÍÍÍÍÍÍÍÍÍÍÍÍÍÍÍ»
º       CONTROLLER START/FLASH DATA      º
º                                  1 1 1 º
ºPHASE.....  1 2 3 4 5 6 7 8 9 0 1 2 º
ºPOWER START....  . . . X . . . X . . . . º
ºEXTERNAL START.  . . . . . . . . . . . . º
ºENTRY REM FLASH  . X . . . X . . . . . . º
ºEXIT REM FLASH.  . . . X . . . X . . . . º
ºREM FLASH YEL..  . . . . . . . . . . . . º
ºFL TOGETHER PHS  . X . X . X . X . X . X º
ºFL TOGETHER OVLPS A: .  B: X  C: .  D: X º
º                                          º
ºPOWER START.............   YELLOW     º
ºEXTERNAL START..........   YELLOW     º
ºPOWER START ALL RED TIME..   0 SECONDS  º
ºPOWER START FLASH TIME....   0 SECONDS  º
ºADDITIONAL PAGE(S)                      º
ÈÍÍÍÍÍÍÍÍÍÍÍÍÍÍÍÍÍÍÍÍÍÍÍÍÍÍÍÍÍÍÍÍÍÍÍÍÍÍ¼

ÉÍÍÍÍÍÍÍÍÍÍÍÍÍÍÍÍÍÍÍÍÍÍÍÍÍÍÍÍÍÍÍÍÍÍÍÍÍÍ»
º       CONTROLLER START/FLASH DATA      º
º                                          º
ºREMOTE FLASH OPTIONS:                     º
º                                          º
ºOUT OF FLASH YELLOW..... X                º
ºOUT OF FLASH ALL RED..... .               º
ºMINIMUM RECALL.......... .                º
ºSPARE................... .                º
ºFLASH THRU LOAD SWITCHES.... .            º
ºCYCLE THROUGH PHASES..... .               º
º                                          º
º                                          º
º                                          º
º                                          º
º                                          º
ºEND OF SUBMENU                            º
ÈÍÍÍÍÍÍÍÍÍÍÍÍÍÍÍÍÍÍÍÍÍÍÍÍÍÍÍÍÍÍÍÍÍÍÍÍÍÍ¼

ÉÍÍÍÍÍÍÍÍÍÍÍÍÍÍÍÍÍÍÍÍÍÍÍÍÍÍÍÍÍÍÍÍÍÍÍÍÍÍ»
º           NO SERVE PHASES              º
ºCANNOT SERVE WITH: 1 1 1                º
ºPHASE              2 1 0 9 8 7 6 5 4 3 2º
º  1                . . . . . . . . . . .º
º  2                . . . . . . . . . .  º
º  3                . . . . . . . . .    º
º  4                . . . . . . . .      º
º  5                . . . . . . .        º
º  6                . . . . . .          º
º  7                . . . . .            º
º  8                . . . .              º
º  9                . . .                º
º 10                . .                  º
º 11                .                    º
```

```
º                                                                    º
ºEND OF SUBMENU                                                      º
ÈÍÍÍÍÍÍÍÍÍÍÍÍÍÍÍÍÍÍÍÍÍÍÍÍÍÍÍÍÍÍÍÍÍÍÍÍÍÍÍÍÍÍÍÍÍÍÍÍÍÍÍÍÍÍÍÍÍÍÍÍ¼

ÉÍÍÍÍÍÍÍÍÍÍÍÍÍÍÍÍÍÍÍÍÍÍÍÍÍÍÍÍÍÍÍÍÍÍÍÍÍÍÍÍÍÍÍÍÍÍÍÍÍÍÍÍÍÍÍÍÍÍÍÍ»
º                  DIMMING                                           º
º                                                                    º
ºLOAD SWITCH....  1..2..3..4..5..6..7..8                           º
ºDIM GRN/WLK....  .  .  .  .  .  .  .  .                           º
ºDIM YEL/PC.....  .  .  .  .  .  .  .  .                           º
ºDIM RED/DW.....  .  .  .  .  .  .  .  .                           º
º                                                                    º
ºLOAD SWITCH....  9.10.11.12.13.14.15.16                           º
ºDIM GRN/WLK....  .  .  .  .  .  .  .  .                           º
ºDIM YEL/PC.....  .  .  .  .  .  .  .  .                           º
ºDIM RED/DW.....  .  .  .  .  .  .  .  .                           º
º                                                                    º
º                                                                    º
º                                                                    º
º                                                                    º
ºEND OF SUBMENU                                                      º
ÈÍÍÍÍÍÍÍÍÍÍÍÍÍÍÍÍÍÍÍÍÍÍÍÍÍÍÍÍÍÍÍÍÍÍÍÍÍÍÍÍÍÍÍÍÍÍÍÍÍÍÍÍÍÍÍÍÍÍÍÍ¼

ÉÍÍÍÍÍÍÍÍÍÍÍÍÍÍÍÍÍÍÍÍÍÍÍÍÍÍÍÍÍÍÍÍÍÍÍÍÍÍÍÍÍÍÍÍÍÍÍÍÍÍÍÍÍÍÍÍÍÍÍÍ»
º          CONTROLLER OPTION DATA                                    º
º                                                    1 1 1º
ºPHASE.........  1 2 3 4 5 6 7 8 9 0 1 2º
ºGUAR PASSAGE...  . . . . . . . . . . . .º
ºNONACTUATED I..  . . . . . . . . . . . .º
ºNONACTUATED II.  . . . . . . . . . . . .º
ºDUAL ENTRY.....  . X . X . X . X . . . .º
ºCOND SERVICE...  X . . . . . . . . . . .º
ºCOND RESERVICE.  . . . . . . . . . . . .º
ºREST IN WALK...  . . . . . . . . . . . .º
ºFLASHING WALK..  . . . . . . . . . . . .º
º                                                                    º
º----- FIVE SECTION LEFT TURN HEADS -----º
º   5-2 :  .     7-4 :  .     1-6 :  .   º
º   3-8 :  .    11-10:  .    9-12 :  .   º
ºADDITIONAL PAGE(S)                                                  º
ÈÍÍÍÍÍÍÍÍÍÍÍÍÍÍÍÍÍÍÍÍÍÍÍÍÍÍÍÍÍÍÍÍÍÍÍÍÍÍÍÍÍÍÍÍÍÍÍÍÍÍÍÍÍÍÍÍÍÍÍÍ¼
♀
ÉÍÍÍÍÍÍÍÍÍÍÍÍÍÍÍÍÍÍÍÍÍÍÍÍÍÍÍÍÍÍÍÍÍÍÍÍÍÍÍÍÍÍÍÍÍÍÍÍÍÍÍÍÍÍÍÍÍÍÍÍ»
º          CONTROLLER OPTION DATA                                    º
ºDUAL ENTRY.....................  ON    º
ºCOND SERVICE ENABLE............  ON    º
ºCOND SERVICE DET X SWITCHING.... OFF   º
ºPED CLR PROTECT................. OFF   º
ºSPEC PREEMPT OVLP FLASH......... OFF   º
ºLOCK DETECTORS IN RED ONLY...... OFF   º
ºRESERVED........................ OFF   º
ºRESERVED........................ OFF   º
ºBACKUP PROTECTION GROUP 1....... OFF   º
ºBACKUP PROTECTION GROUP 2....... OFF   º
ºBACKUP PROTECTION GROUP 3....... OFF   º
ºSIMULTANEOUS GAP GROUP 1........ OFF   º
ºSIMULTANEOUS GAP GROUP 2........ OFF   º
ºSIMULTANEOUS GAP GROUP 3........ OFF   º
ºEND OF SUBMENU                                                      º
ÈÍÍÍÍÍÍÍÍÍÍÍÍÍÍÍÍÍÍÍÍÍÍÍÍÍÍÍÍÍÍÍÍÍÍÍÍÍÍÍÍÍÍÍÍÍÍÍÍÍÍÍÍÍÍÍÍÍÍÍÍ¼
♀
ÉÍÍÍÍÍÍÍÍÍÍÍÍÍÍÍÍÍÍÍÍÍÍÍÍÍÍÍÍÍÍÍÍÍÍÍÍÍÍÍÍÍÍÍÍÍÍÍÍÍÍÍÍÍÍÍÍÍÍÍÍ»
º**************************************º
```

```
º*   ECONOLITE CONTROL PRODUCTS, INC.   *º
º*             ASC/2-2100               *º
º*          Copyright (C) 1992          *º
º*                                      *º
º*      Solving tomorrow's traffic      *º
º*          problems... today           *º
º*                                      *º
º*   SOFTWARE ASSY             VERSION  *º
º*   BOOT            32783        1.28  *º
º*   MAIN PROGRAM    34556        1.80  *º
º*   HELP            32789        1.64  *º
º*   CONFIGURATION   32791 (32K) C8190E *º
º*                                      *º
º*                                      *º
º****************************************º
ÈÍÍÍÍÍÍÍÍÍÍÍÍÍÍÍÍÍÍÍÍÍÍÍÍÍÍÍÍÍÍÍÍÍÍÍÍÍÍ¼

ÉÍÍÍÍÍÍÍÍÍÍÍÍÍÍÍÍÍÍÍÍÍÍÍÍÍÍÍÍÍÍÍÍÍÍÍÍÍÍ»
º          COORDINATOR OPTIONS           º
º                                        º
ºSPLIT UNITS..     %    ACT CRD PHASE..  .º
ºOFFSET UNITS.     %    ACT WALK/REST..  .º
ºINTERCNT FMT.   STD    INHIBIT MAX....  .º
ºINTERCNT SRC.   TLM    MAX2 SELECT....  .º
ºRESYNC COUNT.     0    MULTISYNC......  .º
ºTRANSITION...   SMOOTH FLOAT FORCE OFF  .º
ºDWELL PERIOD.     0%                    º
º                                        º
º                                        º
º                            A B C D E F º
ºFREE ALTERNATE SEQUENCE     . . . . . . º
º                                        º
º                                        º
ºEND OF SUBMENU                          º
ÈÍÍÍÍÍÍÍÍÍÍÍÍÍÍÍÍÍÍÍÍÍÍÍÍÍÍÍÍÍÍÍÍÍÍÍÍÍÍ¼

ÉÍÍÍÍÍÍÍÍÍÍÍÍÍÍÍÍÍÍÍÍÍÍÍÍÍÍÍÍÍÍÍÍÍÍÍÍÍÍ»
º      COORD MANUAL AND SPLIT DEMAND     º
º                                        º
ºMANUAL ENABLE:  ON    MANUAL PATTERN   0º
º                                        º
º----------------------------------------º
º                                        º
ºSPLIT DEMAND:       DEMAND 1  DEMAND 2  º
ºDEMAND CALL TIME        0s        0s    º
ºDEMAND CYCLE COUNT      0         0     º
º                                        º
º                                  1 1 1º
ºDEMAND PHASE:    1 2 3 4 5 6 7 8 9 0 1 2º
ºDEMAND 1 PHASES  . . . . . . . . . . . .º
ºDEMAND 2 PHASES  . . . . . . . . . . . .º
º                                        º
ºEND OF SUBMENU                          º
ÈÍÍÍÍÍÍÍÍÍÍÍÍÍÍÍÍÍÍÍÍÍÍÍÍÍÍÍÍÍÍÍÍÍÍÍÍÍÍ¼

ÉÍÍÍÍÍÍÍÍÍÍÍÍÍÍÍÍÍÍÍÍÍÍÍÍÍÍÍÍÍÍÍÍÍÍÍÍÍÍ»
º        COORD AUTO PERM MIN GREEN       º
º                                        º
º        PHASE   AUTO PERM MIN GRN       º
º          1              0s             º
º          2              0s             º
º          3              0s             º
º          4              0s             º
```

```
º          5              0s              º
º          6              0s              º
º          7              0s              º
º          8              0s              º
º          9              0s              º
º         10              0s              º
º         11              0s              º
º         12              0s              º
ºEND OF SUBMENU                           º
ÈÍÍÍÍÍÍÍÍÍÍÍÍÍÍÍÍÍÍÍÍÍÍÍÍÍÍÍÍÍÍÍÍÍÍÍÍÍÍÍÍÍ¼

ÉÍÍÍÍÍÍÍÍÍÍÍÍÍÍÍÍÍÍÍÍÍÍÍÍÍÍÍÍÍÍÍÍÍÍÍÍÍÍÍÍÍ»
º*****************************************º
º*   ECONOLITE CONTROL PRODUCTS, INC.    *º
º*             ASC/2-2100                *º
º*          Copyright (C) 1992           *º
º*                                       *º
º*      Solving tomorrow's traffic       *º
º*          problems... today            *º
º*                                       *º
º*   SOFTWARE ASSY              VERSION   *º
º*   BOOT            32783        1.28    *º
º*   MAIN PROGRAM    34556        1.80    *º
º*   HELP            32789        1.64    *º
º*   CONFIGURATION   32791 (32K) C8190E   *º
º*                                       *º
º*                                       *º
º*****************************************º
ÈÍÍÍÍÍÍÍÍÍÍÍÍÍÍÍÍÍÍÍÍÍÍÍÍÍÍÍÍÍÍÍÍÍÍÍÍÍÍÍÍÍ¼

ÉÍÍÍÍÍÍÍÍÍÍÍÍÍÍÍÍÍÍÍÍÍÍÍÍÍÍÍÍÍÍÍÍÍÍÍÍÍÍÍÍÍ»
ºPRIORITY PREEMPTOR 1                 1 1 1º
ºPHASE.....  1 2 3 4 5 6 7 8 9 0 1 2º
ºTERM PHASE OVLP  . . . . . .º
ºTRK CLR PHASE..  . . . . . .º
ºHOLD PHASES....  . . . . . .º
ºEXIT PHASES....  . . . . . .º
ºEXIT CALLS.....  . . . . . .º
ºSPARE.....  . . . . . .º
ºTERM OVERLAP...   A: .  B: .  C: .  D: .º
º                                         º
ºACTIVE..... NO  PED DARK..... NO  º
ºPRIORITY..... NO  PED ACTIVE..... NO  º
ºDET LOCK..... NO  ZERO PC TIME... NO  º
ºHOLD FLASH..... NO  PC THRU YELLOW. NO  º
ºTERM OVLP ASAP. NO  TERM PHASES.... NO  º
ºADDITIONAL PAGE(S)                       º
ÈÍÍÍÍÍÍÍÍÍÍÍÍÍÍÍÍÍÍÍÍÍÍÍÍÍÍÍÍÍÍÍÍÍÍÍÍÍÍÍÍÍ¼

ÉÍÍÍÍÍÍÍÍÍÍÍÍÍÍÍÍÍÍÍÍÍÍÍÍÍÍÍÍÍÍÍÍÍÍÍÍÍÍÍÍÍ»
º          PRIORITY PREEMPTOR 1           º
º                                         º
ºDON'T OVERRIDE FLASH.....  .             º
ºFLASH ALL OUTPUTS........  .             º
ºYELLOW-RED GOES GREEN....  .             º
ºENABLE MAX PREEMPT TIME..  .             º
ºACTIVE ONLY DURING HOLD..  .             º
ºNO CVM IN FLASH..........  .             º
ºFAST FLASH GRN ON HOLD...  .             º
ºOUT OF FLASH.............  GREEN         º
º                                         º
º                                         º
º                                         º
```

```
º                                        º
º                                        º
ºADDITIONAL PAGE(S)                      º
ÈÍÍÍÍÍÍÍÍÍÍÍÍÍÍÍÍÍÍÍÍÍÍÍÍÍÍÍÍÍÍÍÍÍÍÍÍ¼

ÉÍÍÍÍÍÍÍÍÍÍÍÍÍÍÍÍÍÍÍÍÍÍÍÍÍÍÍÍÍÍÍÍÍÍÍÍ»
º          PRIORITY PREEMPTOR 1          º
º                                        º
ºMAX TIME......  0  DURATION TIME..  0    º
ºMIN HOLD TIME.  0  DELAY TIME.....  0    º
ºMIN PED CLEAR.  0  INHIBIT TIME...  0    º
ºEXIT MAX......  0  HLD DELAY TIME.  0    º
º                                        º
º                GRN  YEL  RED           º
ºMINIMUM.......    0  0.0  0.0           º
ºTRACK CLEAR...    0  0.0  0.0           º
ºHOLD..........       0.0  0.0           º
º                                        º
º                                        º
º                                        º
º                                        º
ºEND OF SUBMENU                          º
ÈÍÍÍÍÍÍÍÍÍÍÍÍÍÍÍÍÍÍÍÍÍÍÍÍÍÍÍÍÍÍÍÍÍÍÍÍ¼

ÉÍÍÍÍÍÍÍÍÍÍÍÍÍÍÍÍÍÍÍÍÍÍÍÍÍÍÍÍÍÍÍÍÍÍÍÍ»
ºPRIORITY PREEMPTOR 2              1 1 1º
ºPHASE..........  1 2 3 4 5 6 7 8 9 0 1 2º
ºTERM PHASE OVLP  . . . . . . . . . . . .º
ºTRK CLR PHASE..  . . . . . . . . . . . .º
ºHOLD PHASES....  . . . . . . . . . . . .º
ºEXIT PHASES....  . . . . . . . . . . . .º
ºEXIT CALLS.....  . . . . . . . . . . . .º
ºSPARE..........  . . . . . . . . . . . .º
ºTERM OVERLAP...   A: .  B: .  C: .  D: .º
º                                        º
ºACTIVE......... NO  PED DARK....... NO  º
ºPRIORITY....... NO  PED ACTIVE..... NO  º
ºDET LOCK....... NO  ZERO PC TIME... NO  º
ºHOLD FLASH..... NO  PC THRU YELLOW. NO  º
ºTERM OVLP ASAP. NO  TERM PHASES.... NO  º
ºADDITIONAL PAGE(S)                      º
ÈÍÍÍÍÍÍÍÍÍÍÍÍÍÍÍÍÍÍÍÍÍÍÍÍÍÍÍÍÍÍÍÍÍÍÍÍ¼

ÉÍÍÍÍÍÍÍÍÍÍÍÍÍÍÍÍÍÍÍÍÍÍÍÍÍÍÍÍÍÍÍÍÍÍÍÍ»
º          PRIORITY PREEMPTOR 2          º
º                                        º
ºDON'T OVERRIDE FLASH.....  .            º
ºFLASH ALL OUTPUTS........  .            º
ºYELLOW-RED GOES GREEN....  .            º
ºENABLE MAX PREEMPT TIME..  .            º
ºACTIVE ONLY DURING HOLD..  .            º
ºNO CVM IN FLASH..........  .            º
ºFAST FLASH GRN ON HOLD...  .            º
ºOUT OF FLASH.............  GREEN        º
º                                        º
º                                        º
º                                        º
º                                        º
º                                        º
ºADDITIONAL PAGE(S)                      º
ÈÍÍÍÍÍÍÍÍÍÍÍÍÍÍÍÍÍÍÍÍÍÍÍÍÍÍÍÍÍÍÍÍÍÍÍÍ¼

ÉÍÍÍÍÍÍÍÍÍÍÍÍÍÍÍÍÍÍÍÍÍÍÍÍÍÍÍÍÍÍÍÍÍÍÍÍ»
```

```
º          PRIORITY PREEMPTOR 2          º
º                                        º
ºMAX TIME......  0  DURATION TIME..  0   º
ºMIN HOLD TIME.  0  DELAY TIME.....  0   º
ºMIN PED CLEAR.  0  INHIBIT TIME...  0   º
ºEXIT MAX......  0  HLD DELAY TIME.  0   º
º                                        º
º                GRN  YEL  RED           º
ºMINIMUM.......    0  0.0  0.0           º
ºTRACK CLEAR...    0  0.0  0.0           º
ºHOLD..........       0.0  0.0           º
º                                        º
ºLINKED PREEMPTOR.....  0                º
º                                        º
º                                        º
ºEND OF SUBMENU                          º
ÈÍÍÍÍÍÍÍÍÍÍÍÍÍÍÍÍÍÍÍÍÍÍÍÍÍÍÍÍÍÍÍÍÍÍÍÍÍÍÍÍ¼

ÉÍÍÍÍÍÍÍÍÍÍÍÍÍÍÍÍÍÍÍÍÍÍÍÍÍÍÍÍÍÍÍÍÍÍÍÍÍÍÍÍ»
ºPRIORITY PREEMPTOR 3                1 1 1º
ºPHASE.........  1 2 3 4 5 6 7 8 9 0 1 2º
ºTERM PHASE OVLP  . . . . . . . . . . . .º
ºTRK CLR PHASE..  . . . . . . . . . . . .º
ºHOLD PHASES....  . X . . X . . . . . . .º
ºEXIT PHASES....  . . . . . . . . . . . .º
ºEXIT CALLS.....  . . . . . . . . . . . .º
ºSPARE..........  . . . . . . . . . . . .º
ºTERM OVERLAP...   A: .  B: .  C: .  D: .º
º                                        º
ºACTIVE.........YES  PED DARK....... NO  º
ºPRIORITY....... NO  PED ACTIVE.....YES  º
ºDET LOCK....... NO  ZERO PC TIME... NO  º
ºHOLD FLASH..... NO  PC THRU YELLOW. NO  º
ºTERM OVLP ASAP. NO  TERM PHASES.... NO  º
ºADDITIONAL PAGE(S)                      º
ÈÍÍÍÍÍÍÍÍÍÍÍÍÍÍÍÍÍÍÍÍÍÍÍÍÍÍÍÍÍÍÍÍÍÍÍÍÍÍÍÍ¼

ÉÍÍÍÍÍÍÍÍÍÍÍÍÍÍÍÍÍÍÍÍÍÍÍÍÍÍÍÍÍÍÍÍÍÍÍÍÍÍÍÍ»
º          PRIORITY PREEMPTOR 3          º
º                                        º
ºDON'T OVERRIDE FLASH.....  .            º
ºFLASH ALL OUTPUTS........  .            º
ºYELLOW-RED GOES GREEN....  .            º
ºENABLE MAX PREEMPT TIME..  .            º
ºACTIVE ONLY DURING HOLD..  .            º
ºNO CVM IN FLASH..........  .            º
ºFAST FLASH GRN ON HOLD...  .            º
ºOUT OF FLASH.............  GREEN        º
º                                        º
º                                        º
º                                        º
º                                        º
º                                        º
ºADDITIONAL PAGE(S)                      º
ÈÍÍÍÍÍÍÍÍÍÍÍÍÍÍÍÍÍÍÍÍÍÍÍÍÍÍÍÍÍÍÍÍÍÍÍÍÍÍÍÍ¼

ÉÍÍÍÍÍÍÍÍÍÍÍÍÍÍÍÍÍÍÍÍÍÍÍÍÍÍÍÍÍÍÍÍÍÍÍÍÍÍÍÍ»
º          PRIORITY PREEMPTOR 3          º
º                                        º
ºMAX TIME..... 60  DURATION TIME..  0    º
ºMIN HOLD TIME.  5  DELAY TIME.....  0   º
ºMIN PED CLEAR.  0  INHIBIT TIME...  0   º
ºEXIT MAX......  0  HLD DELAY TIME.  0   º
```

```
º                                                  º
º                GRN  YEL  RED                     º
ºMINIMUM.......    1  0.0  0.0                     º
ºTRACK CLEAR...    0  0.0  0.0                     º
ºHOLD..........       0.0  0.0                     º
º                                                  º
ºLINKED PREEMPTOR.....  0                          º
º                                                  º
º                                                  º
ºEND OF SUBMENU                                    º
ÈÍÍÍÍÍÍÍÍÍÍÍÍÍÍÍÍÍÍÍÍÍÍÍÍÍÍÍÍÍÍÍÍÍÍÍÍÍÍÍÍÍÍÍÍ¼

ÉÍÍÍÍÍÍÍÍÍÍÍÍÍÍÍÍÍÍÍÍÍÍÍÍÍÍÍÍÍÍÍÍÍÍÍÍÍÍÍÍÍÍÍÍ»
º          PRIORITY PREEMPTOR 4     1 1 1º
ºPHASE.........  1 2 3 4 5 6 7 8 9 0 1 2º
ºTERM PHASE OVLP  . . . . . . . . . . . .º
ºTRK CLR PHASE..  . . . . . . . . . . . .º
ºHOLD PHASES....  X . . . . X . . . . . .º
ºEXIT PHASES....  . . . . . . . . . . . .º
ºEXIT CALLS.....  . . . . . . . . . . . .º
ºSPARE..........  . . . . . . . . . . . .º
ºTERM OVERLAP...   A: .  B: .  C: .  D: .º
º                                                  º
ºACTIVE.........YES  PED DARK....... NO  º
ºPRIORITY....... NO  PED ACTIVE.....YES  º
ºDET LOCK....... NO  ZERO PC TIME... NO  º
ºHOLD FLASH..... NO  PC THRU YELLOW. NO  º
ºTERM OVLP ASAP. NO  TERM PHASES.... NO  º
ºADDITIONAL PAGE(S)                                º
ÈÍÍÍÍÍÍÍÍÍÍÍÍÍÍÍÍÍÍÍÍÍÍÍÍÍÍÍÍÍÍÍÍÍÍÍÍÍÍÍÍÍÍÍÍ¼

ÉÍÍÍÍÍÍÍÍÍÍÍÍÍÍÍÍÍÍÍÍÍÍÍÍÍÍÍÍÍÍÍÍÍÍÍÍÍÍÍÍÍÍÍÍ»
º          PRIORITY PREEMPTOR 4                    º
º                                                  º
ºDON'T OVERRIDE FLASH.....  .                      º
ºFLASH ALL OUTPUTS........  .                      º
ºYELLOW-RED GOES GREEN....  .                      º
ºENABLE MAX PREEMPT TIME..  .                      º
ºACTIVE ONLY DURING HOLD..  .                      º
ºNO CVM IN FLASH..........  .                      º
ºFAST FLASH GRN ON HOLD...  .                      º
ºOUT OF FLASH.............  GREEN                  º
º                                                  º
º                                                  º
º                                                  º
º                                                  º
º                                                  º
ºADDITIONAL PAGE(S)                                º
ÈÍÍÍÍÍÍÍÍÍÍÍÍÍÍÍÍÍÍÍÍÍÍÍÍÍÍÍÍÍÍÍÍÍÍÍÍÍÍÍÍÍÍÍÍ¼

ÉÍÍÍÍÍÍÍÍÍÍÍÍÍÍÍÍÍÍÍÍÍÍÍÍÍÍÍÍÍÍÍÍÍÍÍÍÍÍÍÍÍÍÍÍ»
º          PRIORITY PREEMPTOR 4                    º
º                                                  º
ºMAX TIME..... 60  DURATION TIME..  0   º
ºMIN HOLD TIME.  5  DELAY TIME.....  0   º
ºMIN PED CLEAR.  0  INHIBIT TIME...  0   º
ºEXIT MAX......  0  HLD DELAY TIME.  0   º
º                                                  º
º                GRN  YEL  RED                     º
ºMINIMUM.......    1  0.0  0.0                     º
ºTRACK CLEAR...    0  0.0  0.0                     º
ºHOLD..........       0.0  0.0                     º
º                                                  º
```

```
ºLINKED PREEMPTOR.....  0                 º
º                                         º
º                                         º
ºEND OF SUBMENU                           º
ÈÍÍÍÍÍÍÍÍÍÍÍÍÍÍÍÍÍÍÍÍÍÍÍÍÍÍÍÍÍÍÍÍÍÍÍÍÍ¼

ÉÍÍÍÍÍÍÍÍÍÍÍÍÍÍÍÍÍÍÍÍÍÍÍÍÍÍÍÍÍÍÍÍÍÍÍÍÍ»
ºPRIORITY PREEMPTOR 5                 1 1 1º
ºPHASE.....  1 2 3 4 5 6 7 8 9 0 1 2º
ºTERM PHASE OVLP  . . . . . .º
ºTRK CLR PHASE..  . . . . . .º
ºHOLD PHASES....  . . . X . . X . . . . .º
ºEXIT PHASES....  . . . . . .º
ºEXIT CALLS.....  . . . . . .º
ºSPARE.....  . . . . . .º
ºTERM OVERLAP...   A: .  B: .  C: .  D: .º
º                                         º
ºACTIVE.....YES  PED DARK....... NO  º
ºPRIORITY....... NO  PED ACTIVE.....YES  º
ºDET LOCK....... NO  ZERO PC TIME... NO  º
ºHOLD FLASH..... NO  PC THRU YELLOW. NO  º
ºTERM OVLP ASAP. NO  TERM PHASES.... NO  º
ºADDITIONAL PAGE(S)                       º
ÈÍÍÍÍÍÍÍÍÍÍÍÍÍÍÍÍÍÍÍÍÍÍÍÍÍÍÍÍÍÍÍÍÍÍÍÍÍ¼

ÉÍÍÍÍÍÍÍÍÍÍÍÍÍÍÍÍÍÍÍÍÍÍÍÍÍÍÍÍÍÍÍÍÍÍÍÍÍ»
º          PRIORITY PREEMPTOR 5           º
º                                         º
ºDON'T OVERRIDE FLASH.....  .             º
ºFLASH ALL OUTPUTS........  .             º
ºYELLOW-RED GOES GREEN....  .             º
ºENABLE MAX PREEMPT TIME..  .             º
ºACTIVE ONLY DURING HOLD..  .             º
ºNO CVM IN FLASH..........  .             º
ºFAST FLASH GRN ON HOLD...  .             º
ºOUT OF FLASH.............  GREEN         º
º                                         º
º                                         º
º                                         º
º                                         º
º                                         º
ºADDITIONAL PAGE(S)                       º
ÈÍÍÍÍÍÍÍÍÍÍÍÍÍÍÍÍÍÍÍÍÍÍÍÍÍÍÍÍÍÍÍÍÍÍÍÍÍ¼

ÉÍÍÍÍÍÍÍÍÍÍÍÍÍÍÍÍÍÍÍÍÍÍÍÍÍÍÍÍÍÍÍÍÍÍÍÍÍ»
º          PRIORITY PREEMPTOR 5           º
º                                         º
ºMAX TIME..... 60  DURATION TIME..  0   º
ºMIN HOLD TIME.  5  DELAY TIME.....  0   º
ºMIN PED CLEAR.  0  INHIBIT TIME...  0   º
ºEXIT MAX......  0  HLD DELAY TIME.  0   º
º                                         º
º                GRN  YEL  RED            º
ºMINIMUM.......    1  0.0  0.0           º
ºTRACK CLEAR...    0  0.0  0.0           º
ºHOLD..........       0.0  0.0           º
º                                         º
ºLINKED PREEMPTOR.....  0                 º
º                                         º
º                                         º
ºEND OF SUBMENU                           º
ÈÍÍÍÍÍÍÍÍÍÍÍÍÍÍÍÍÍÍÍÍÍÍÍÍÍÍÍÍÍÍÍÍÍÍÍÍÍ¼
```

```
ÉÍÍÍÍÍÍÍÍÍÍÍÍÍÍÍÍÍÍÍÍÍÍÍÍÍÍÍÍÍÍÍÍÍÍÍÍÍÍÍÍÍÍ»
ºPRIORITY PREEMPTOR 6                  1 1 1º
ºPHASE.....  1 2 3 4 5 6 7 8 9 0 1 2º
ºTERM PHASE OVLP  . . . . . . . . . . . .º
ºTRK CLR PHASE..  . . . . . . . . . . . .º
ºHOLD PHASES....  . . X . . . . X . . . .º
ºEXIT PHASES....  . . . . . . . . . . . .º
ºEXIT CALLS.....  . . . . . . . . . . . .º
ºSPARE..........  . . . . . . . . . . . .º
ºTERM OVERLAP...   A: .  B: .  C: .  D: .º
º                                          º
ºACTIVE.........YES  PED DARK....... NO    º
ºPRIORITY....... NO  PED ACTIVE.....YES    º
ºDET LOCK....... NO  ZERO PC TIME... NO    º
ºHOLD FLASH..... NO  PC THRU YELLOW. NO    º
ºTERM OVLP ASAP. NO  TERM PHASES.... NO    º
ºADDITIONAL PAGE(S)                        º
ÈÍÍÍÍÍÍÍÍÍÍÍÍÍÍÍÍÍÍÍÍÍÍÍÍÍÍÍÍÍÍÍÍÍÍÍÍÍÍÍÍÍÍ¼

ÉÍÍÍÍÍÍÍÍÍÍÍÍÍÍÍÍÍÍÍÍÍÍÍÍÍÍÍÍÍÍÍÍÍÍÍÍÍÍÍÍÍÍ»
º          PRIORITY PREEMPTOR 6            º
º                                          º
ºDON'T OVERRIDE FLASH.....  .              º
ºFLASH ALL OUTPUTS........  .              º
ºYELLOW-RED GOES GREEN....  .              º
ºENABLE MAX PREEMPT TIME..  .              º
ºACTIVE ONLY DURING HOLD..  .              º
ºNO CVM IN FLASH..........  .              º
ºFAST FLASH GRN ON HOLD...  .              º
ºOUT OF FLASH.............  GREEN          º
º                                          º
º                                          º
º                                          º
º                                          º
º                                          º
ºADDITIONAL PAGE(S)                        º
ÈÍÍÍÍÍÍÍÍÍÍÍÍÍÍÍÍÍÍÍÍÍÍÍÍÍÍÍÍÍÍÍÍÍÍÍÍÍÍÍÍÍÍ¼

ÉÍÍÍÍÍÍÍÍÍÍÍÍÍÍÍÍÍÍÍÍÍÍÍÍÍÍÍÍÍÍÍÍÍÍÍÍÍÍÍÍÍÍ»
º          PRIORITY PREEMPTOR 6            º
º                                          º
ºMAX TIME...... 60  DURATION TIME..  0     º
ºMIN HOLD TIME.  5  DELAY TIME.....  0     º
ºMIN PED CLEAR.  0  INHIBIT TIME...  0     º
ºEXIT MAX......  0  HLD DELAY TIME.  0     º
º                                          º
º                GRN  YEL  RED             º
ºMINIMUM.......    1  0.0  0.0             º
ºTRACK CLEAR...    0  0.0  0.0             º
ºHOLD..........       0.0  0.0             º
º                                          º
ºLINKED PREEMPTOR.....  0                  º
º                                          º
º                                          º
ºEND OF SUBMENU                            º
ÈÍÍÍÍÍÍÍÍÍÍÍÍÍÍÍÍÍÍÍÍÍÍÍÍÍÍÍÍÍÍÍÍÍÍÍÍÍÍÍÍÍÍ¼

ÉÍÍÍÍÍÍÍÍÍÍÍÍÍÍÍÍÍÍÍÍÍÍÍÍÍÍÍÍÍÍÍÍÍÍÍÍÍÍÍÍÍÍ»
º              BUS PREEMPTOR               º
º                                          º
º                    - BUS PREEMPTOR -     º
º                     1    2    3    4     º
ºPREEMPTOR ACTIVE.    .    .    .    .     º
```

```
ºDETECTOR LOCK....     .    .    .    .   º
ºMAXIMUM TIME.....     0    0    0    0   º
ºRESERVICE TIME...     0    0    0    0   º
ºDELAY TIME.......     0    0    0    0   º
ºINHIBIT TIME.....     0    0    0    0   º
ºENTRANCE GREEN...     0    0    0    0   º
ºENTRANCE PED CLR.     0    0    0    0   º
ºENTRANCE YELLOW..   0.0  0.0  0.0  0.0   º
ºENTRANCE RED.....   0.0  0.0  0.0  0.0   º
ºMIN HOLD TIME....     0    0    0    0   º
ºADDITIONAL PAGE(S)                       º
ÈÍÍÍÍÍÍÍÍÍÍÍÍÍÍÍÍÍÍÍÍÍÍÍÍÍÍÍÍÍÍÍÍÍÍÍÍÍÍ¼

ÉÍÍÍÍÍÍÍÍÍÍÍÍÍÍÍÍÍÍÍÍÍÍÍÍÍÍÍÍÍÍÍÍÍÍÍÍÍÍ»
º              BUS PREEMPTOR              º
º                                         º
º                  ------ HOLD PHASE -----º
º                                  1 1 1º
º                  1 2 3 4 5 6 7 8 9 0 1 2º
ºPREEMPTOR 1....  . . . . . . . . . . . . .º
ºPREEMPTOR 2....  . . . . . . . . . . . . .º
ºPREEMPTOR 3....  . . . . . . . . . . . . .º
ºPREEMPTOR 4....  . . . . . . . . . . . . .º
º                                         º
º                                         º
º                                         º
º                                         º
º                                         º
º                                         º
ºEND OF SUBMENU                           º
ÈÍÍÍÍÍÍÍÍÍÍÍÍÍÍÍÍÍÍÍÍÍÍÍÍÍÍÍÍÍÍÍÍÍÍÍÍÍÍ¼

ÉÍÍÍÍÍÍÍÍÍÍÍÍÍÍÍÍÍÍÍÍÍÍÍÍÍÍÍÍÍÍÍÍÍÍÍÍÍÍ»
º*****************************************º
º*   ECONOLITE CONTROL PRODUCTS, INC.    *º
º*             ASC/2-2100                *º
º*          Copyright (C) 1992           *º
º*                                       *º
º*      Solving tomorrow's traffic       *º
º*          problems... today            *º
º*                                       *º
º*   SOFTWARE ASSY              VERSION   *º
º*   BOOT            32783        1.28   *º
º*   MAIN PROGRAM    34556        1.80   *º
º*   HELP            32789        1.64   *º
º*   CONFIGURATION   32791 (32K) C8190E  *º
º*                                       *º
º*                                       *º
º*****************************************º
ÈÍÍÍÍÍÍÍÍÍÍÍÍÍÍÍÍÍÍÍÍÍÍÍÍÍÍÍÍÍÍÍÍÍÍÍÍÍÍ¼

ÉÍÍÍÍÍÍÍÍÍÍÍÍÍÍÍÍÍÍÍÍÍÍÍÍÍÍÍÍÍÍÍÍÍÍÍÍÍÍ»
º       NIC/TOD CLOCK/CALENDAR DATA       º
º                                         º
º                                         º
ºDATE SET:  3/14/18  | ENTER DATE/TIME    º
ºTIME SET: 12:05:49  | THEN PRESS ENTER   º
º                                         º
ºMANUAL NIC PROGRAM STEP    0             º
ºMANUAL TOD PROGRAM STEP    0             º
º                                         º
ºSYNC REFERENCE TIME    0:00              º
ºSYNC REFERENCE.........REFERENCE TIME    º
```

```
º                                                    º
ºWEEK 1 BEGINS ON 1ST SUNDAY  .                      º
ºDISABLE DAYLIGHT SAVINGS     .                      º
ºDST BEGINS LAST SUNDAY       .                      º
ºEND OF SUBMENU                                      º
ÈÍÍÍÍÍÍÍÍÍÍÍÍÍÍÍÍÍÍÍÍÍÍÍÍÍÍÍÍÍÍÍÍÍÍÍÍÍÍÍÍÍÍÍÍÍ¼

ÉÍÍÍÍÍÍÍÍÍÍÍÍÍÍÍÍÍÍÍÍÍÍÍÍÍÍÍÍÍÍÍÍÍÍÍÍÍÍÍÍÍÍÍÍÍ»
º          NIC/TOD WEEKLY PROGRAMS                   º
ºWEEK   SUN   MON   TUE   WED   THU   FRI   SAT      º
º  1     1     1     1     1     1     1     1       º
º  2     1     1     1     1     1     1     1       º
º  3     1     1     1     1     1     1     1       º
º  4     1     1     1     1     1     1     1       º
º  5     1     1     1     1     1     1     1       º
º  6     1     1     1     1     1     1     1       º
º  7     1     1     1     1     1     1     1       º
º  8     1     1     1     1     1     1     1       º
º  9     1     1     1     1     1     1     1       º
º 10     1     1     1     1     1     1     1       º
º                                                    º
º                                                    º
º                                                    º
ºEND OF SUBMENU                                      º
ÈÍÍÍÍÍÍÍÍÍÍÍÍÍÍÍÍÍÍÍÍÍÍÍÍÍÍÍÍÍÍÍÍÍÍÍÍÍÍÍÍÍÍÍÍÍ¼

ÉÍÍÍÍÍÍÍÍÍÍÍÍÍÍÍÍÍÍÍÍÍÍÍÍÍÍÍÍÍÍÍÍÍÍÍÍÍÍÍÍÍÍÍÍÍ»
º          NIC/TOD YEARLY PROGRAM                    º
ºWEEK OF YEAR       1  2  3  4  5  6  7  8º
ºWEEKLY PROGRAM     1  1  1  1  1  1  1  1º
º                                                    º
ºWEEK OF YEAR       9 10 11 12 13 14 15 16º
ºWEEKLY PROGRAM     1  1  1  1  1  1  1  1º
º                                                    º
ºWEEK OF YEAR      17 18 19 20 21 22 23 24º
ºWEEKLY PROGRAM     1  1  1  1  1  1  1  1º
º                                                    º
ºWEEK OF YEAR      25 26 27 28 29 30 31 32º
ºWEEKLY PROGRAM     1  1  1  1  1  1  1  1º
º                                                    º
ºWEEK OF YEAR      33 34 35 36 37 38 39 40º
ºWEEKLY PROGRAM     1  1  1  1  1  1  1  1º
ºADDITIONAL SCREEN(S)                                º
ÈÍÍÍÍÍÍÍÍÍÍÍÍÍÍÍÍÍÍÍÍÍÍÍÍÍÍÍÍÍÍÍÍÍÍÍÍÍÍÍÍÍÍÍÍÍ¼

ÉÍÍÍÍÍÍÍÍÍÍÍÍÍÍÍÍÍÍÍÍÍÍÍÍÍÍÍÍÍÍÍÍÍÍÍÍÍÍÍÍÍÍÍÍÍ»
º          NIC/TOD YEARLY PROGRAM                    º
º                                                    º
ºWEEK OF YEAR      41 42 43 44 45 46 47 48º
ºWEEKLY PROGRAM     1  1  1  1  1  1  1  1º
º                                                    º
ºWEEK OF YEAR                 49 50 51 52 53º
ºWEEKLY PROGRAM                1  1  1  1  1º
º                                                    º
º                                                    º
º                                                    º
º                                                    º
º                                                    º
º                                                    º
º                                                    º
º                                                    º
ºEND OF SUBMENU                                      º
ÈÍÍÍÍÍÍÍÍÍÍÍÍÍÍÍÍÍÍÍÍÍÍÍÍÍÍÍÍÍÍÍÍÍÍÍÍÍÍÍÍÍÍÍÍÍ¼
```

```
É͸͸͸͸͸͸͸͸͸͸͸͸͸͸͸͸͸͸͸͸͸͸͸͸͸͸͸͸͸͸͸͸͸͸͸͸͸»
º          NIC/TOD HOLIDAY PROGRAM                    º
ºHOLIDAY   FLOAT/  MON/  DOW/  WOM/  PROG              º
º          FIXED   MON   DOM   YEAR                    º
º    1     FIXED     0     0     0     0              º
º    2     FIXED     0     0     0     0              º
º    3     FIXED     0     0     0     0              º
º    4     FIXED     0     0     0     0              º
º    5     FIXED     0     0     0     0              º
º    6     FIXED     0     0     0     0              º
º    7     FIXED     0     0     0     0              º
º    8     FIXED     0     0     0     0              º
º    9     FIXED     0     0     0     0              º
º   10     FIXED     0     0     0     0              º
º   11     FIXED     0     0     0     0              º
º   12     FIXED     0     0     0     0              º
ºADDITIONAL SCREEN(S)                                 º
È͸͸͸͸͸͸͸͸͸͸͸͸͸͸͸͸͸͸͸͸͸͸͸͸͸͸͸͸͸͸͸͸͸͸͸͸͸¼
♀

É͸͸͸͸͸͸͸͸͸͸͸͸͸͸͸͸͸͸͸͸͸͸͸͸͸͸͸͸͸͸͸͸͸͸͸͸͸»
º          NIC/TOD HOLIDAY PROGRAM                    º
ºHOLIDAY   FLOAT/  MON/  DOW/  WOM/  PROG              º
º          FIXED   MON   DOM   YEAR                    º
º   13     FIXED     0     0     0     0              º
º   14     FIXED     0     0     0     0              º
º   15     FIXED     0     0     0     0              º
º   16     FIXED     0     0     0     0              º
º   17     FIXED     0     0     0     0              º
º   18     FIXED     0     0     0     0              º
º   19     FIXED     0     0     0     0              º
º   20     FIXED     0     0     0     0              º
º   21     FIXED     0     0     0     0              º
º   22     FIXED     0     0     0     0              º
º   23     FIXED     0     0     0     0              º
º   24     FIXED     0     0     0     0              º
ºADDITIONAL SCREEN(S)                                 º
È͸͸͸͸͸͸͸͸͸͸͸͸͸͸͸͸͸͸͸͸͸͸͸͸͸͸͸͸͸͸͸͸͸͸͸͸͸¼

É͸͸͸͸͸͸͸͸͸͸͸͸͸͸͸͸͸͸͸͸͸͸͸͸͸͸͸͸͸͸͸͸͸͸͸͸͸»
º          NIC/TOD HOLIDAY PROGRAM                    º
ºHOLIDAY   FLOAT/  MON/  DOW/  WOM/  PROG              º
º          FIXED   MON   DOM   YEAR                    º
º   25     FIXED     0     0     0     0              º
º   26     FIXED     0     0     0     0              º
º   27     FIXED     0     0     0     0              º
º   28     FIXED     0     0     0     0              º
º   29     FIXED     0     0     0     0              º
º   30     FIXED     0     0     0     0              º
º   31     FIXED     0     0     0     0              º
º   32     FIXED     0     0     0     0              º
º   33     FIXED     0     0     0     0              º
º   34     FIXED     0     0     0     0              º
º   35     FIXED     0     0     0     0              º
º   36     FIXED     0     0     0     0              º
ºEND OF SUBMENU                                       º
È͸͸͸͸͸͸͸͸͸͸͸͸͸͸͸͸͸͸͸͸͸͸͸͸͸͸͸͸͸͸͸͸͸͸͸͸͸¼
♀

É͸͸͸͸͸͸͸͸͸͸͸͸͸͸͸͸͸͸͸͸͸͸͸͸͸͸͸͸͸͸͸͸͸͸͸͸͸»
º*****************************************º
º*   ECONOLITE CONTROL PRODUCTS, INC.    *º
º*            ASC/2-2100                 *º
º*          Copyright (C) 1992           *º
```

```
º*                                      *º
º*      Solving tomorrow's traffic      *º
º*          problems... today           *º
º*                                      *º
º*   SOFTWARE ASSY              VERSION  *º
º*   BOOT            32783        1.28  *º
º*   MAIN PROGRAM    34556        1.80  *º
º*   HELP            32789        1.64  *º
º*   CONFIGURATION   32791 (32K) C8190E *º
º*                                      *º
º*                                      *º
º****************************************º
ÈÍÍÍÍÍÍÍÍÍÍÍÍÍÍÍÍÍÍÍÍÍÍÍÍÍÍÍÍÍÍÍÍÍÍÍÍÍÍ¼

ÉÍÍÍÍÍÍÍÍÍÍÍÍÍÍÍÍÍÍÍÍÍÍÍÍÍÍÍÍÍÍÍÍÍÍÍÍÍÍ»
º          DETECTOR TYPE/TIMERS          º
º                                 NO    LOG   º
ºDET TYPE LOCK  EXTEND DELAY RESET ENABLEº
º 1   0     .     0.0     2    .       .  º
º 2   0     .     0.0     0    .       .  º
º 3   1     .     0.0     2    .       .  º
º 4   0     .     0.0     2    .       .  º
º 5   1     .     0.0     2    .       .  º
º 6   0     .     0.0     0    .       .  º
º 7   0     .     0.0     2    .       .  º
º 8   1     .     0.0     2    .       .  º
º 9   0     .     0.0     2    .       .  º
º10   1     .     3.0     2    .       .  º
º11   0     .     0.0     2    .       .  º
º12   1     .     0.0    10    .       .  º
ºADDITIONAL SCREEN(S)                     º
ÈÍÍÍÍÍÍÍÍÍÍÍÍÍÍÍÍÍÍÍÍÍÍÍÍÍÍÍÍÍÍÍÍÍÍÍÍÍÍ¼

ÉÍÍÍÍÍÍÍÍÍÍÍÍÍÍÍÍÍÍÍÍÍÍÍÍÍÍÍÍÍÍÍÍÍÍÍÍÍÍ»
º          DETECTOR TYPE/TIMERS          º
º                                 NO    LOG   º
ºDET TYPE LOCK  EXTEND DELAY RESET ENABLEº
º13   1     .     0.0     2    .       .  º
º14   0     .     0.0     2    .       .  º
º15   1     .     0.0     2    .       .  º
º16   0     .     0.0     2    .       .  º
º17   1     .     0.0     4    .       .  º
º18   1     .     0.0     4    .       .  º
º19   1     .     0.0     4    .       .  º
º20   1     .     0.0    10    .       .  º
º21   1     .     0.0     2    .       .  º
º22   1     .     0.0     2    .       .  º
º23   0     .     0.0     0    .       .  º
º24   1     .     3.0     0    .       .  º
ºADDITIONAL SCREEN(S)                     º
ÈÍÍÍÍÍÍÍÍÍÍÍÍÍÍÍÍÍÍÍÍÍÍÍÍÍÍÍÍÍÍÍÍÍÍÍÍÍÍ¼

♀

ÉÍÍÍÍÍÍÍÍÍÍÍÍÍÍÍÍÍÍÍÍÍÍÍÍÍÍÍÍÍÍÍÍÍÍÍÍÍÍ»
º          DETECTOR TYPE/TIMERS          º
º                                 NO    LOG   º
ºDET TYPE LOCK  EXTEND DELAY RESET ENABLEº
º25   0     .     0.0     0    .       .  º
º26   0     .     0.0     0    .       .  º
º27   0     .     0.0     0    .       .  º
º28   0     .     0.0     0    .       .  º
º29   0     .     0.0     0    .       .  º
º30   0     .     0.0     0    .       .  º
º31   0     .     0.0     0    .       .  º
```

```
º32   0     .     0.0     0    .       .  º
º33   0     .     0.0     0    .       .  º
º34   0     .     0.0     0    .       .  º
º35   0     .     0.0     0    .       .  º
º36   0     .     0.0     0    .       .  º
ºADDITIONAL SCREEN(S)                     º
ÈÍÍÍÍÍÍÍÍÍÍÍÍÍÍÍÍÍÍÍÍÍÍÍÍÍÍÍÍÍÍÍÍÍÍÍÍÍ¼

ÉÍÍÍÍÍÍÍÍÍÍÍÍÍÍÍÍÍÍÍÍÍÍÍÍÍÍÍÍÍÍÍÍÍÍÍÍÍ»
º          DETECTOR TYPE/TIMERS           º
º                              NO    LOG   º
ºDET TYPE LOCK  EXTEND DELAY RESET ENABLEº
º37   0     .     0.0     0    .       .  º
º38   0     .     0.0     0    .       .  º
º39   0     .     0.0     0    .       .  º
º40   0     .     0.0     0    .       .  º
º41   0     .     0.0     0    .       .  º
º42   0     .     0.0     0    .       .  º
º43   0     .     0.0     0    .       .  º
º44   0     .     0.0     0    .       .  º
º45   0     .     0.0     0    .       .  º
º46   0     .     0.0     0    .       .  º
º47   0     .     0.0     0    .       .  º
º48   0     .     0.0     0    .       .  º
ºADDITIONAL SCREEN(S)                     º
ÈÍÍÍÍÍÍÍÍÍÍÍÍÍÍÍÍÍÍÍÍÍÍÍÍÍÍÍÍÍÍÍÍÍÍÍÍÍ¼

ÉÍÍÍÍÍÍÍÍÍÍÍÍÍÍÍÍÍÍÍÍÍÍÍÍÍÍÍÍÍÍÍÍÍÍÍÍÍ»
º          DETECTOR TYPE/TIMERS           º
º                              NO    LOG   º
ºDET TYPE LOCK  EXTEND DELAY RESET ENABLEº
º49   0     .     0.0     0    .       .  º
º50   0     .     0.0     0    .       .  º
º51   0     .     0.0     0    .       .  º
º52   0     .     0.0     0    .       .  º
º53   0     .     0.0     0    .       .  º
º54   0     .     0.0     0    .       .  º
º55   0     .     0.0     0    .       .  º
º56   0     .     0.0     0    .       .  º
º57   0     .     0.0     0    .       .  º
º58   0     .     0.0     0    .       .  º
º59   0     .     0.0     0    .       .  º
º60   0     .     0.0     0    .       .  º
ºADDITIONAL SCREEN(S)                     º
ÈÍÍÍÍÍÍÍÍÍÍÍÍÍÍÍÍÍÍÍÍÍÍÍÍÍÍÍÍÍÍÍÍÍÍÍÍÍ¼

ÉÍÍÍÍÍÍÍÍÍÍÍÍÍÍÍÍÍÍÍÍÍÍÍÍÍÍÍÍÍÍÍÍÍÍÍÍÍ»
º          DETECTOR TYPE/TIMERS           º
º                              NO    LOG   º
ºDET TYPE LOCK  EXTEND DELAY RESET ENABLEº
º53   0     .     0.0     0    .       .  º
º54   0     .     0.0     0    .       .  º
º55   0     .     0.0     0    .       .  º
º56   0     .     0.0     0    .       .  º
º57   0     .     0.0     0    .       .  º
º58   0     .     0.0     0    .       .  º
º59   0     .     0.0     0    .       .  º
º60   0     .     0.0     0    .       .  º
º61   0     .     0.0     0    .       .  º
º62   0     .     0.0     0    .       .  º
º63   0     .     0.0     0    .       .  º
º64   0     .     0.0     0    .       .  º
ºEND OF SUBMENU                           º
```

♀

```
ÈÍÍÍÍÍÍÍÍÍÍÍÍÍÍÍÍÍÍÍÍÍÍÍÍÍÍÍÍÍÍÍÍÍÍÍÍÍÍÍÍÍÍÍÍÍ¼

ÉÍÍÍÍÍÍÍÍÍÍÍÍÍÍÍÍÍÍÍÍÍÍÍÍÍÍÍÍÍÍÍÍÍÍÍÍÍÍÍÍÍÍÍÍÍ»
º      DETECTOR PHASE ASSIGNMENT                       º
º              PHASE ASSIGNMENT: 1 1 1                 º
ºDETECTOR      1 2 3 4 5 6 7 8 9 0 1 2                 º
º    1         . . . . . . . . . . . .                 º
º    2         . X . . . . . . . . . .                 º
º    3         . . X . . . . . . . . .                 º
º    4         . . . . . . . . . . . .                 º
º    5         . . . . X . . . . . . .                 º
º    6         . . . . . . . . . . . .                 º
º    7         . . . . . . . . . . . .                 º
º    8         . . . . . . . X . . . .                 º
º    9         . X . . . . . . . . . .                 º
º   10         . X . . . . . . . . . .                 º
º   11         . . X . . . . . . . . .                 º
º   12         . . . . . . . . X . . .                 º
ºADDITIONAL SCREEN(S)                                  º
ÈÍÍÍÍÍÍÍÍÍÍÍÍÍÍÍÍÍÍÍÍÍÍÍÍÍÍÍÍÍÍÍÍÍÍÍÍÍÍÍÍÍÍÍÍÍ¼

ÉÍÍÍÍÍÍÍÍÍÍÍÍÍÍÍÍÍÍÍÍÍÍÍÍÍÍÍÍÍÍÍÍÍÍÍÍÍÍÍÍÍÍÍÍÍ»
º      DETECTOR PHASE ASSIGNMENT                       º
º              PHASE ASSIGNMENT: 1 1 1                 º
ºDETECTOR      1 2 3 4 5 6 7 8 9 0 1 2                 º
º   13         . . . . X . . . . . . .                 º
º   14         . . . . . . . . . . . .                 º
º   15         . . . . . . . X . . . .                 º
º   16         . . . . . . . . . . . .                 º
º   17         . . . . . . X . . . . .                 º
º   18         . . . X . . . . . . . .                 º
º   19         . . . X . . . . . . . .                 º
º   20         . . . X . . . . . . . .                 º
º   21         X . . . . . . . . . . .                 º
º   22         X . . . . . . . . . . .                 º
º   23         . . . . . X . . . . . .                 º
º   24         . . . . . X . . . . . .                 º
ºADDITIONAL SCREEN(S)                                  º
ÈÍÍÍÍÍÍÍÍÍÍÍÍÍÍÍÍÍÍÍÍÍÍÍÍÍÍÍÍÍÍÍÍÍÍÍÍÍÍÍÍÍÍÍÍÍ¼

♀

ÉÍÍÍÍÍÍÍÍÍÍÍÍÍÍÍÍÍÍÍÍÍÍÍÍÍÍÍÍÍÍÍÍÍÍÍÍÍÍÍÍÍÍÍÍÍ»
ºPED AND SYSTEM DETECTOR LOCAL ASSIGNMENTº
º                                                      º
ºDETECTOR LOG INTERVAL.....  0 MINUTESº
º--------------------------------------º
ºLOCAL          - PHASE PED DETECTOR -    º
ºPED DET         1   2   3   4   5   6    º
ºNUMBER..        1   2   3   4   5   6    º
º                7   8   9  10  11  12    º
ºNUMBER..        7   8   9  10  11  12    º
º--------------------------------------º
ºLOCAL     -- LOCAL SYSTEM DET NUMBER ---º
ºDETECTOR   1   2   3   4   5   6   7   8º
ºNUMBER..   0   0   0   0   0   0   0   0º
º           9  10  11  12  13  14  15  16º
ºNUMBER..   0   0   0   0   0   0   0   0º
ºEND OF SUBMENU                                        º
ÈÍÍÍÍÍÍÍÍÍÍÍÍÍÍÍÍÍÍÍÍÍÍÍÍÍÍÍÍÍÍÍÍÍÍÍÍÍÍÍÍÍÍÍÍÍ¼

ÉÍÍÍÍÍÍÍÍÍÍÍÍÍÍÍÍÍÍÍÍÍÍÍÍÍÍÍÍÍÍÍÍÍÍÍÍÍÍÍÍÍÍÍÍÍ»
º            SPEED DETECTORS                           º
º                                                      º
º  SPEED DET NUMBER:  ...1....2....3....4º
```

```
ºONE DETECTOR SPEED:                                    º
º LOCAL DET NUMBER..      0    0    0    0º
º VEHICLE LENGTH....      0    0    0    0º
º LOOP LENGTH.......      0    0    0    0º
º                                               º
ºTWO DETECTOR SPEED:                                    º
º LOCAL DET NUMBER..      0    0    0    0º
º SPEED TRAP LENGTH.      0    0    0    0º
º                                               º
ºENABLE LOG.........      .    .    .    .º
º                                               º
ºUNITS:  INCHES                                         º
ºADDITIONAL PAGE(S)                          MORE->º
ÈÍÍÍÍÍÍÍÍÍÍÍÍÍÍÍÍÍÍÍÍÍÍÍÍÍÍÍÍÍÍÍÍÍÍÍÍÍÍÍÍÍÍÍÍÍ¼

ÉÍÍÍÍÍÍÍÍÍÍÍÍÍÍÍÍÍÍÍÍÍÍÍÍÍÍÍÍÍÍÍÍÍÍÍÍÍÍÍÍÍÍÍÍÍ»
º            SPEED DETECTORS                            º
º                                                       º
º  SPEED DET NUMBER:  ...5....6....7....8º
ºONE DETECTOR SPEED:                                    º
º LOCAL DET NUMBER..      0    0    0    0º
º VEHICLE LENGTH....      0    0    0    0º
º LOOP LENGTH.......      0    0    0    0º
º                                               º
ºTWO DETECTOR SPEED:                                    º
º LOCAL DET NUMBER..      0    0    0    0º
º SPEED TRAP LENGTH.      0    0    0    0º
º                                               º
ºENABLE LOG.........      .    .    .    .º
º                                               º
ºUNITS:  INCHES                                         º
ºADDITIONAL PAGE(S)                       <-MORE  º
ÈÍÍÍÍÍÍÍÍÍÍÍÍÍÍÍÍÍÍÍÍÍÍÍÍÍÍÍÍÍÍÍÍÍÍÍÍÍÍÍÍÍÍÍÍÍ¼

ÉÍÍÍÍÍÍÍÍÍÍÍÍÍÍÍÍÍÍÍÍÍÍÍÍÍÍÍÍÍÍÍÍÍÍÍÍÍÍÍÍÍÍÍÍÍ»
º            SPEED DETECTORS                            º
º                                                       º
º  SPEED DET NUMBER:  ...9...10...11...12º
ºONE DETECTOR SPEED:                                    º
º LOCAL DET NUMBER..      0    0    0    0º
º VEHICLE LENGTH....      0    0    0    0º
º LOOP LENGTH.......      0    0    0    0º
º                                               º
ºTWO DETECTOR SPEED:                                    º
º LOCAL DET NUMBER..      0    0    0    0º
º SPEED TRAP LENGTH.      0    0    0    0º
º                                               º
ºENABLE LOG.........      .    .    .    .º
º                                               º
º                                               º
ºEND OF SUBMENU                              MORE->º
ÈÍÍÍÍÍÍÍÍÍÍÍÍÍÍÍÍÍÍÍÍÍÍÍÍÍÍÍÍÍÍÍÍÍÍÍÍÍÍÍÍÍÍÍÍÍ¼

ÉÍÍÍÍÍÍÍÍÍÍÍÍÍÍÍÍÍÍÍÍÍÍÍÍÍÍÍÍÍÍÍÍÍÍÍÍÍÍÍÍÍÍÍÍÍ»
º            SPEED DETECTORS                            º
º                                                       º
º  SPEED DET NUMBER:  ..13...14...15...16º
ºONE DETECTOR SPEED:                                    º
º LOCAL DET NUMBER..      0    0    0    0º
º VEHICLE LENGTH....      0    0    0    0º
º LOOP LENGTH.......      0    0    0    0º
º                                               º
ºTWO DETECTOR SPEED:                                    º
```

```
º LOCAL DET NUMBER..      0    0    0    0º
º SPEED TRAP LENGTH.      0    0    0    0º
º                                          º
ºENABLE LOG.........      .    .    .    .º
º                                          º
º                                          º
ºEND OF SUBMENU                  <-MORE    º
ÈÍÍÍÍÍÍÍÍÍÍÍÍÍÍÍÍÍÍÍÍÍÍÍÍÍÍÍÍÍÍÍÍÍÍÍÍÍÍ¼

ÉÍÍÍÍÍÍÍÍÍÍÍÍÍÍÍÍÍÍÍÍÍÍÍÍÍÍÍÍÍÍÍÍÍÍÍÍÍÍ»
º      PED DETECTOR DIAGNOSTIC PLAN        º
º                                          º
ºPLAN DET NUMBER  1  2  3  4  5  6  7  8 º
º  1  DIAG NUM..  0  0  0  0  0  0  0  0 º
º     SCALING...  1  1  1  1  1  1  1  1 º
º  2  DIAG NUM..  0  0  0  0  0  0  0  0 º
º     SCALING...  1  1  1  1  1  1  1  1 º
º  3  DIAG NUM..  0  0  0  0  0  0  0  0 º
º     SCALING...  1  1  1  1  1  1  1  1 º
º  4  DIAG NUM..  0  0  0  0  0  0  0  0 º
º     SCALING...  1  1  1  1  1  1  1  1 º
º  5  DIAG NUM..  0  0  0  0  0  0  0  0 º
º     SCALING...  1  1  1  1  1  1  1  1 º
º  6  DIAG NUM..  0  0  0  0  0  0  0  0 º
º     SCALING...  1  1  1  1  1  1  1  1 º
ºADDITIONAL SCREEN(S)              MORE->º
ÈÍÍÍÍÍÍÍÍÍÍÍÍÍÍÍÍÍÍÍÍÍÍÍÍÍÍÍÍÍÍÍÍÍÍÍÍÍÍ¼

ÉÍÍÍÍÍÍÍÍÍÍÍÍÍÍÍÍÍÍÍÍÍÍÍÍÍÍÍÍÍÍÍÍÍÍÍÍÍÍ»
º      PED DETECTOR DIAGNOSTIC PLAN        º
º                                          º
ºPLAN DET NUMBER  1  2  3  4  5  6  7  8 º
º  7  DIAG NUM..  0  0  0  0  0  0  0  0 º
º     SCALING...  1  1  1  1  1  1  1  1 º
º  8  DIAG NUM..  0  0  0  0  0  0  0  0 º
º     SCALING...  1  1  1  1  1  1  1  1 º
º                                          º
º                                          º
º                                          º
º                                          º
º                                          º
º                                          º
º                                          º
º                                          º
ºEND OF SUBMENU                    MORE->º
ÈÍÍÍÍÍÍÍÍÍÍÍÍÍÍÍÍÍÍÍÍÍÍÍÍÍÍÍÍÍÍÍÍÍÍÍÍÍÍ¼

ÉÍÍÍÍÍÍÍÍÍÍÍÍÍÍÍÍÍÍÍÍÍÍÍÍÍÍÍÍÍÍÍÍÍÍÍÍÍÍ»
º      PED DETECTOR DIAGNOSTIC PLAN        º
º                                          º
ºPLAN DET NUMBER  9 10 11 12               º
º  1  DIAG NUM..  0  0  0  0               º
º     SCALING...  1  1  1  1               º
º  2  DIAG NUM..  0  0  0  0               º
º     SCALING...  1  1  1  1               º
º  3  DIAG NUM..  0  0  0  0               º
º     SCALING...  1  1  1  1               º
º  4  DIAG NUM..  0  0  0  0               º
º     SCALING...  1  1  1  1               º
º  5  DIAG NUM..  0  0  0  0               º
º     SCALING...  1  1  1  1               º
º  6  DIAG NUM..  0  0  0  0               º
º     SCALING...  1  1  1  1               º
```

```
ºADDITIONAL SCREEN(S)                    <-MORE  º
ÈÍÍÍÍÍÍÍÍÍÍÍÍÍÍÍÍÍÍÍÍÍÍÍÍÍÍÍÍÍÍÍÍÍÍÍÍÍÍÍÍÍÍ¼

ÉÍÍÍÍÍÍÍÍÍÍÍÍÍÍÍÍÍÍÍÍÍÍÍÍÍÍÍÍÍÍÍÍÍÍÍÍÍÍÍÍÍÍ»
º      PED DETECTOR DIAGNOSTIC PLAN              º
º                                                 º
ºPLAN DET NUMBER  9 10 11 12                      º
º  7  DIAG NUM..  0  0  0  0                      º
º     SCALING...  1  1  1  1                      º
º  8  DIAG NUM..  0  0  0  0                      º
º     SCALING...  1  1  1  1                      º
º                                                 º
º                                                 º
º                                                 º
º                                                 º
º                                                 º
º                                                 º
º                                                 º
º                                                 º
º                                                 º
ºEND OF SUBMENU                          <-MORE  º
ÈÍÍÍÍÍÍÍÍÍÍÍÍÍÍÍÍÍÍÍÍÍÍÍÍÍÍÍÍÍÍÍÍÍÍÍÍÍÍÍÍÍÍ¼

ÉÍÍÍÍÍÍÍÍÍÍÍÍÍÍÍÍÍÍÍÍÍÍÍÍÍÍÍÍÍÍÍÍÍÍÍÍÍÍÍÍÍÍ»
º      DETECTOR DIAGNOSTIC INTERVAL               º
º                                                 º
ºDIAGNOSTIC     NO        MAX      ERRATIC        º
º  NUMBER    ACTIVITY  PRESENCE  COUNTS          º
º    1          0         0         0            º
º    2          0         0         0            º
º    3          0         0         0            º
º    4          0         0         0            º
º    5          0         0         0            º
º    6          0         0         0            º
º    7          0         0         0            º
º    8          0         0         0            º
º    9          0         0         0            º
º   10          0         0         0            º
º   11          0         0         0            º
ºADDITIONAL SCREEN(S)                             º
ÈÍÍÍÍÍÍÍÍÍÍÍÍÍÍÍÍÍÍÍÍÍÍÍÍÍÍÍÍÍÍÍÍÍÍÍÍÍÍÍÍÍÍ¼

ÉÍÍÍÍÍÍÍÍÍÍÍÍÍÍÍÍÍÍÍÍÍÍÍÍÍÍÍÍÍÍÍÍÍÍÍÍÍÍÍÍÍÍ»
º      DETECTOR DIAGNOSTIC INTERVAL               º
º                                                 º
ºDIAGNOSTIC     NO        MAX      ERRATIC        º
º  NUMBER    ACTIVITY  PRESENCE  COUNTS          º
º   12          0         0         0            º
º   13          0         0         0            º
º   14          0         0         0            º
º   15          0         0         0            º
º   16          0         0         0            º
º   17          0         0         0            º
º   18          0         0         0            º
º   19          0         0         0            º
º   20          0         0         0            º
º   21          0         0         0            º
º   22          0         0         0            º
ºADDITIONAL SCREEN(S)                             º
ÈÍÍÍÍÍÍÍÍÍÍÍÍÍÍÍÍÍÍÍÍÍÍÍÍÍÍÍÍÍÍÍÍÍÍÍÍÍÍÍÍÍÍ¼

ÉÍÍÍÍÍÍÍÍÍÍÍÍÍÍÍÍÍÍÍÍÍÍÍÍÍÍÍÍÍÍÍÍÍÍÍÍÍÍÍÍÍÍ»
º      DETECTOR DIAGNOSTIC INTERVAL               º
º                                                 º
```

DIAGNOSTIC NUMBER	NO ACTIVITY	MAX PRESENCE	ERRATIC COUNTS
22	0	0	0
23	0	0	0
24	0	0	0
25	0	0	0
26	0	0	0
27	0	0	0
28	0	0	0
29	0	0	0
30	0	0	0
31	0	0	0
32	0	0	0

END OF SUBMENU

♀

Ontario, CA

ECC3NOUTE CONTROL. PRODUCTS. INC.

Solutions that Move the World™

Archibald Avenue @ Airport Drive - 10.211.54.61 - Cobalt - Econolite Type - Cobalt

Configuration Controller Sequence

Phase Ring Sequence.....(Note: Sequences identical to the prior one are not printed)

	01	02	03	04	05	06	07	08	09	10	11	12	13	14	15	16
	B		B		B		B		B							
Sequence 1																
Ring 1	1	2	3	4	9	10	13	14	.	.	.	.	.	.	.	.
Ring 2	5	6	7	8	11	12	15	16	.	.	.	.	.	.	.	.
Sequence 2																
Ring 1	2	1	3	4	10	9	13	14	.	.	.	.	.	.	.	.
Ring 2	5	6	7	8	11	12	15	16	.	.	.	.	.	.	.	.
Sequence 3																
Ring 1	1	2	4	3	9	10	14	13	.	.	.	.	.	.	.	.
Ring 2	5	6	7	8	11	12	15	16	.	.	.	.	.	.	.	.
Sequence 4																
Ring 1	2	1	4	3	10	9	14	13	.	.	.	.	.	.	.	.
Ring 2	5	6	7	8	11	12	15	16	.	.	.	.	.	.	.	.
Sequence 5																
Ring 1	1	2	3	4	9	10	13	14	.	.	.	.	.	.	.	.
Ring 2	6	5	7	8	12	11	15	16	.	.	.	.	.	.	.	.
Sequence 6																
Ring 1	2	1	3	4	10	9	13	14	.	.	.	.	.	.	.	.
Ring 2	6	5	7	8	12	11	15	16	.	.	.	.	.	.	.	.
Sequence 7																
Ring 1	1	2	4	3	9	10	14	13	.	.	.	.	.	.	.	.
Ring 2	6	5	7	8	12	11	15	16	.	.	.	.	.	.	.	.
Sequence 8																
Ring 1	2	1	4	3	10	9	14	13	.	.	.	.	.	.	.	.
Ring 2	6	5	7	8	12	11	15	16	.	.	.	.	.	.	.	.
Sequence 9																
Ring 1	1	2	3	4	9	10	13	14	.	.	.	.	.	.	.	.
Ring 2	5	6	8	7	11	12	16	15	.	.	.	.	.	.	.	.
Sequence 10																
Ring 1	2	1	3	4	10	9	13	14	.	.	.	.	.	.	.	.
Ring 2	5	6	8	7	11	12	16	15	.	.	.	.	.	.	.	.
Sequence 11																
Ring 1	1	2	4	3	9	10	14	13	.	.	.	.	.	.	.	.
Ring 2	5	6	8	7	11	12	16	15	.	.	.	.	.	.	.	.
Sequence 12																
Ring 1	2	1	4	3	10	9	14	13	.	.	.	.	.	.	.	.
Ring 2	5	6	8	7	11	12	16	15	.	.	.	.	.	.	.	.
Sequence 13																
Ring 1	1	2	3	4	9	10	13	14	.	.	.	.	.	.	.	.
Ring 2	6	5	8	7	12	11	16	15	.	.	.	.	.	.	.	.
Sequence 14																
Ring 1	2	1	3	4	10	9	13	14	.	.	.	.	.	.	.	.
Ring 2	6	5	8	7	12	11	16	15	.	.	.	.	.	.	.	.
Sequence 15																
Ring 1	1	2	4	3	9	10	14	13	.	.	.	.	.	.	.	.
Ring 2	6	5	8	7	12	11	16	15	.	.	.	.	.	.	.	.
Sequence 16																
Ring 1	2	1	4	3	10	9	14	13	.	.	.	.	.	.	.	.
Ring 2	6	5	8	7	12	11	16	15	.	.	.	.	.	.	.	.

Phase	1	2	3	4	5	6	7	8	9	10	11	12	13	14	15	16

Hardware Alternate Sequence Enable: No

Ontario, CA

"ECO NO LITE

C D M T R O L PRODUCTS, INC.

SoluLians LhaL Move the World™

Archibald Avenue @ Airport Drive - 10.211.54.61 - Cobalt - Econolite Type - Cobalt

Configuration Port 1 (SDLC)

Port 1 SDLC (MM) 1-4-1

BIU	1	2	3	4	5	6	7	8
Term & Facility								
Detector Rack								

Enable TS2/MMU Type Cabinet: No
Enable MMU Extended Status: No
Enable SDLC Stop Time: No
Enable 3 Critical RFE's Lockup: No

MMU Program (MM) 1-4-2

Channel Can Serve With Channel	
Channel 1	**Channel 2**

Color Check Enable (MM) 1-4-3

Enable Color Check: Yes

MMU/LS	1	2	3	4	5	6	7	8	9	10	11	12	13	14	15	16
Green																
Yellow																
Red																

Secondary Stations/Tests (MM) 1-4-4

ID	1	2	3	4	5	6	7	8	MMU
Term & Facility									

ID	1	2	3	4	5	6	7	8	Diag
Detector Rack									

Enable SDLC Diagnostic Test: No

Ontario, CA

"ECO NO LITE

C D M T R O L PRODUCTS, INC.

SoluLians LhaL Move the World™

Archibald Avenue @ Airport Drive - 10.211.54.61 - Cobalt - Econolite Type - Cobalt

Configuration Communications 1 (SDLC)

Ethernet Port Configuration (MM) 1-5-1

DHCP Enable:	No
Controller IP:	10.211.54.61
Subnet Mask:	255.255.255.0
Default Gateway IP:	10.211.54.1
Server IP:	10.10.5.227

NTCIP (MM) 1-5-5

NTCIP Backup Time (Sec):	0
NTCIP UDP Port:	501
Ethernet Priority:	1
Port 2 Priority (Port C50S for 2070):	4
Port 3A Priority (Port C21S for 2070):	3
Port 3B Priority (Port C22S for 2070):	2

Port Configuration (MM) 1-5-2 to 1-5-4

Port	2 (C50S)	3A (C21S)	3B (C22S)
Comm Module	None	Auto	Auto
Protocol	NTCIP	NTCIP	NTCIP
Enable	No	No	No
Data Rate (BPS)	9600	9600	9600
Data, Parity, Stop	8 N 1	8 N 1	8 N 1
Address	0	0	0
Telemetry Response Delay	0.0	0.0	0.0
Duplex - Half or Full	Half	Full	Full
Flow Control	No	Yes	Yes
Group Address	0	0	0
Single Flag Enable	Yes	Yes	Yes
RTS to CTS Delay	n/a	n/a	0.0
RTS Turn Off Delay	n/a	n/a	0.0
Dropout Time	10	10	10
Early RTS	n/a	n/a	No
Telemetry Mode	n/a	n/a	FSK
ATCS Railroad	0	n/a	n/a
ATCS Railroad Line	0	n/a	n/a
ATCS Group	0	n/a	n/a
Wayside Device	0	n/a	n/a
ATC Device	0	n/a	n/a
Wayside Subnode	0	n/a	n/a
ATC Subnode	0	n/a	n/a

ECPIP (MM) 1-5-6

Controller Address:	0
Expanded System Detector Address:	0

System Detector Assignment

System Detector	Local Detector

Wireless Configuration (MM) 1-5-7

Wireless Channel Number:	1
Wireless Access Code:	327423274

Ontario, CA

IECONOLITE
C D M T R O L PRODUCTS, INC.
Solutions that Move the World™

Archibald Avenue @ Airport Drive - 10.211.54.61 - Cobalt - Econolite Type - Cobalt

Configuration Logging / Display

Event Logging (MM) 1-6-1

Critical RFE's (MMU/TF)	Yes	3 Critical Errors Within 24 Hours	Yes
MMU Flash Faults	Yes	Local Flash Fault	Yes
Non-Critical RFE's (Det/Test)	Yes	Detector Errors	Yes
Coordination Errors	Yes	Controller Download	Yes
Preemption Events	Yes	TSP Events	Yes
Power On/Off	Yes	Low Battery	Yes
Access	Yes	Data Change	Yes
Online / Offline	Yes		

Alarm Event	1	2	3	4	5	6	7	8	9	10	11	12	13	14	15	16
Enable Logging	X	X	X	X	X	X	X	X	X	X	X	X	X	X	X	X

Display Options (MM) 1-7-2

Key Click Enable:	Yes
Switch to Graphics Mode:	No
LED Mode:	Auto
Display Mode:	Basic
Trans Mode Pop-Up Disable:	No

Sign On (MM) 8-5

Sign On Message Line 1: Solutions that Move the World
Sign On Message Line 2:

Software Modules (MM) 8-7

Application Version: 32.65.30
OS (Boot) Version: 06.07.00

Ontario, CA

IECONOLITE
C D M T R O L PRODUCTS, INC.
Solutions that Move the World™

Archibald Avenue @ Airport Drive - 10.211.54.61 - Cobalt - Econolite Type - Cobalt

Logic Processor Page 1

Logic Statement Control (MM) 1-8-1

Logic #	Statement Control

Ontario, CA

IECONOLITE
C D M T R O L PRODUCTS, INC.

Solutions that Move the World™

Archibald Avenue @ Airport Drive - 10.211.54.61 - Cobalt - Econolite Type - Cobalt

Logic Processor Page 2

Logic Statements (MM) 1-8-2

Ontario, CA

"ECO NO LITE

C D M T R O L PRODUCTS, INC.

SoluLians LhaL Move the World™

Archibald Avenue @ Airport Drive - 10.211.54.61 - Cobalt - Econolite Type - Cobalt

Controller Timing Plan (MM) 2-1

Plan 1 - ""

Phase	1	2	3	4	5	6	7	8	9	10	11	12	13	14	15	16
Direction	N-L	S-T	E-L	W-T	S-L	N-T	W-L	E-T	N	N	N	N	N	N	N	N
Min Green	10	10	10	10	10	10	10	10	5	5	5	5	5	5	5	5
Bk Min Green	10	10	10	10	10	10	10	10	0	0	0	0	0	0	0	0
CS Min Green	0	0	0	0	0	0	0	0	0	0	0	0	0	0	0	0
Delay Green	0	0	0	0	0	0	0	0	0	0	0	0	0	0	0	0
Walk	0	0	0	4	0	4	0	0	0	10	0	10	0	10	0	10
Walk2	0	0	0	0	0	0	0	0	0	0	0	0	0	0	0	0
Walk Max	0	0	0	0	0	0	0	0	0	0	0	0	0	0	0	0
Ped Clear	0	0	0	39	0	38	0	0	0	16	0	16	0	16	0	16
Ped Clear 2	0	0	0	0	0	0	0	0	0	0	0	0	0	0	0	0
Ped Clear Max	0	0	0	0	0	0	0	0	0	0	0	0	0	0	0	0
Ped CO	0	0	0	0	0	0	0	0	0	0	0	0	0	0	0	0
Vehicle Ext	2.0	2.5	2.0	2.5	2.0	2.5	2.0	2.5	5.0	5.0	5.0	5.0	5.0	5.0	5.0	5.0
Vehicle Ext 2	0.0	0.0	0.0	0.0	0.0	0.0	0.0	0.0	0.0	0.0	0.0	0.0	0.0	0.0	0.0	0.0
Max1	20	35	20	35	20	35	20	35	35	35	35	35	35	35	35	35
Max2	40	40	40	40	40	40	40	40	40	40	40	40	40	40	40	40
Max3	0	0	0	0	0	0	0	0	0	0	0	0	0	0	0	0
DYM Max	0	0	0	0	0	0	0	0	0	0	0	0	0	0	0	0
Dym Step	0.0	0.0	0.0	0.0	0.0	0.0	0.0	0.0	0.0	0.0	0.0	0.0	0.0	0.0	0.0	0.0
Yellow	5.5	5.5	5.0	5.0	5.5	5.5	5.0	5.0	3.0	3.0	3.0	3.0	3.0	3.0	3.0	3.0
Red Clear	2.0	2.0	2.0	2.0	2.0	2.0	2.0	2.0	1.0	1.0	1.0	1.0	1.0	1.0	1.0	1.0
Red Max	0.0	0.0	0.0	0.0	0.0	0.0	0.0	0.0	0.0	0.0	0.0	0.0	0.0	0.0	0.0	0.0
Red Revert	2.0	2.0	2.0	2.0	2.0	2.0	2.0	2.0	2.0	2.0	2.0	2.0	2.0	2.0	2.0	2.0
Act B4	0	0	0	0	0	0	0	0	0	0	0	0	0	0	0	0
Sec/Act	0.0	0.0	0.0	0.0	0.0	0.0	0.0	0.0	0.0	0.0	0.0	0.0	0.0	0.0	0.0	0.0
Max Int	0	0	0	0	0	0	0	0	0	0	0	0	0	0	0	0
Time B4	0	0	0	0	0	0	0	0	0	0	0	0	0	0	0	0
Cars Wt	0	0	0	0	0	0	0	0	0	0	0	0	0	0	0	0
STPTDuc	0.0	0.0	0.0	0.0	0.0	0.0	0.0	0.0	0.0	0.0	0.0	0.0	0.0	0.0	0.0	0.0
TTReduc	0	0	0	0	0	0	0	0	0	0	0	0	0	0	0	0
Min Gap	0.0	0.0	0.0	0.0	0.0	0.0	0.0	0.0	0.0	0.0	0.0	0.0	0.0	0.0	0.0	0.0

Plan 2 - ""

Phase	1	2	3	4	5	6	7	8	9	10	11	12	13	14	15	16
Direction	N-L	S-T	E-L	W-T	S-L	N-T	W-L	E-T	N	N	N	N	N	N	N	N
Min Green	5	5	5	5	5	5	5	5	5	5	5	5	5	5	5	5
Bk Min Green	0	0	0	0	0	0	0	0	0	0	0	0	0	0	0	0
CS Min Green	0	0	0	0	0	0	0	0	0	0	0	0	0	0	0	0
Delay Green	0	0	0	0	0	0	0	0	0	0	0	0	0	0	0	0
Walk	0	10	0	10	0	10	0	10	0	10	0	10	0	10	0	10
Walk2	0	0	0	0	0	0	0	0	0	0	0	0	0	0	0	0
Walk Max	0	0	0	0	0	0	0	0	0	0	0	0	0	0	0	0
Ped Clear	0	16	0	16	0	16	0	16	0	16	0	16	0	16	0	16
Ped Clear 2	0	0	0	0	0	0	0	0	0	0	0	0	0	0	0	0
Ped Clear Max	0	0	0	0	0	0	0	0	0	0	0	0	0	0	0	0
Ped CO	0	0	0	0	0	0	0	0	0	0	0	0	0	0	0	0
Vehicle Ext	5.0	5.0	5.0	5.0	5.0	5.0	5.0	5.0	5.0	5.0	5.0	5.0	5.0	5.0	5.0	5.0
Vehicle Ext 2	0.0	0.0	0.0	0.0	0.0	0.0	0.0	0.0	0.0	0.0	0.0	0.0	0.0	0.0	0.0	0.0
Max1	35	35	35	35	35	35	35	35	35	35	35	35	35	35	35	35
Max2	40	40	40	40	40	40	40	40	40	40	40	40	40	40	40	40
Max3	0	0	0	0	0	0	0	0	0	0	0	0	0	0	0	0

DYM Max	0	0	0	0	0	0	0	0	0	0	0	0	0	0	0	0
Dym Step	0.0	0.0	0.0	0.0	0.0	0.0	0.0	0.0	0.0	0.0	0.0	0.0	0.0	0.0	0.0	0.0
Yellow	3.0	3.0	3.0	3.0	3.0	3.0	3.0	3.0	3.0	3.0	3.0	3.0	3.0	3.0	3.0	3.0
Red Clear	1.0	1.0	1.0	1.0	1.0	1.0	1.0	1.0	1.0	1.0	1.0	1.0	1.0	1.0	1.0	1.0
Red Max	0.0	0.0	0.0	0.0	0.0	0.0	0.0	0.0	0.0	0.0	0.0	0.0	0.0	0.0	0.0	0.0
Red Revert	2.0	2.0	2.0	2.0	2.0	2.0	2.0	2.0	2.0	2.0	2.0	2.0	2.0	2.0	2.0	2.0
Act B4	0	0	0	0	0	0	0	0	0	0	0	0	0	0	0	0
Sec/Act	0.0	0.0	0.0	0.0	0.0	0.0	0.0	0.0	0.0	0.0	0.0	0.0	0.0	0.0	0.0	0.0
Max Int	0	0	0	0	0	0	0	0	0	0	0	0	0	0	0	0
Time B4	0	0	0	0	0	0	0	0	0	0	0	0	0	0	0	0
Cars Wt	0	0	0	0	0	0	0	0	0	0	0	0	0	0	0	0
STPTDuc	0.0	0.0	0.0	0.0	0.0	0.0	0.0	0.0	0.0	0.0	0.0	0.0	0.0	0.0	0.0	0.0
TTReduc	0	0	0	0	0	0	0	0	0	0	0	0	0	0	0	0
Min Gap	0.0	0.0	0.0	0.0	0.0	0.0	0.0	0.0	0.0	0.0	0.0	0.0	0.0	0.0	0.0	0.0

Plan 3 - ""

Phase	1	2	3	4	5	6	7	8	9	10	11	12	13	14	15	16
Direction	N-L	S-T	E-L	W-T	S-L	N-T	W-L	E-T	N	N	N	N	N	N	N	N
Min Green	5	5	5	5	5	5	5	5	5	5	5	5	5	5	5	5
Bk Min Green	0	0	0	0	0	0	0	0	0	0	0	0	0	0	0	0
CS Min Green	0	0	0	0	0	0	0	0	0	0	0	0	0	0	0	0
Delay Green	0	0	0	0	0	0	0	0	0	0	0	0	0	0	0	0
Walk	0	10	0	10	0	10	0	10	0	10	0	10	0	10	0	10
Walk2	0	0	0	0	0	0	0	0	0	0	0	0	0	0	0	0
Walk Max	0	0	0	0	0	0	0	0	0	0	0	0	0	0	0	0
Ped Clear	0	16	0	16	0	16	0	16	0	16	0	16	0	16	0	16
Ped Clear 2	0	0	0	0	0	0	0	0	0	0	0	0	0	0	0	0
Ped Clear Max	0	0	0	0	0	0	0	0	0	0	0	0	0	0	0	0
Ped CO	0	0	0	0	0	0	0	0	0	0	0	0	0	0	0	0
Vehicle Ext	5.0	5.0	5.0	5.0	5.0	5.0	5.0	5.0	5.0	5.0	5.0	5.0	5.0	5.0	5.0	5.0
Vehicle Ext 2	0.0	0.0	0.0	0.0	0.0	0.0	0.0	0.0	0.0	0.0	0.0	0.0	0.0	0.0	0.0	0.0
Max1	35	35	35	35	35	35	35	35	35	35	35	35	35	35	35	35
Max2	40	40	40	40	40	40	40	40	40	40	40	40	40	40	40	40
Max3	0	0	0	0	0	0	0	0	0	0	0	0	0	0	0	0
DYM Max	0	0	0	0	0	0	0	0	0	0	0	0	0	0	0	0
Dym Step	0.0	0.0	0.0	0.0	0.0	0.0	0.0	0.0	0.0	0.0	0.0	0.0	0.0	0.0	0.0	0.0
Yellow	3.0	3.0	3.0	3.0	3.0	3.0	3.0	3.0	3.0	3.0	3.0	3.0	3.0	3.0	3.0	3.0
Red Clear	1.0	1.0	1.0	1.0	1.0	1.0	1.0	1.0	1.0	1.0	1.0	1.0	1.0	1.0	1.0	1.0
Red Max	0.0	0.0	0.0	0.0	0.0	0.0	0.0	0.0	0.0	0.0	0.0	0.0	0.0	0.0	0.0	0.0
Red Revert	2.0	2.0	2.0	2.0	2.0	2.0	2.0	2.0	2.0	2.0	2.0	2.0	2.0	2.0	2.0	2.0
Act B4	0	0	0	0	0	0	0	0	0	0	0	0	0	0	0	0
Sec/Act	0.0	0.0	0.0	0.0	0.0	0.0	0.0	0.0	0.0	0.0	0.0	0.0	0.0	0.0	0.0	0.0
Max Int	0	0	0	0	0	0	0	0	0	0	0	0	0	0	0	0
Time B4	0	0	0	0	0	0	0	0	0	0	0	0	0	0	0	0
Cars Wt	0	0	0	0	0	0	0	0	0	0	0	0	0	0	0	0
STPTDuc	0.0	0.0	0.0	0.0	0.0	0.0	0.0	0.0	0.0	0.0	0.0	0.0	0.0	0.0	0.0	0.0
TTReduc	0	0	0	0	0	0	0	0	0	0	0	0	0	0	0	0
Min Gap	0.0	0.0	0.0	0.0	0.0	0.0	0.0	0.0	0.0	0.0	0.0	0.0	0.0	0.0	0.0	0.0

Plan 4 - ""

Phase	1	2	3	4	5	6	7	8	9	10	11	12	13	14	15	16
Direction	N-L	S-T	E-L	W-T	S-L	N-T	W-L	E-T	N	N	N	N	N	N	N	N
Min Green	5	5	5	5	5	5	5	5	5	5	5	5	5	5	5	5
Bk Min Green	0	0	0	0	0	0	0	0	0	0	0	0	0	0	0	0
CS Min Green	0	0	0	0	0	0	0	0	0	0	0	0	0	0	0	0
Delay Green	0	0	0	0	0	0	0	0	0	0	0	0	0	0	0	0
Walk	0	10	0	10	0	10	0	10	0	10	0	10	0	10	0	10
Walk2	0	0	0	0	0	0	0	0	0	0	0	0	0	0	0	0
Walk Max	0	0	0	0	0	0	0	0	0	0	0	0	0	0	0	0
Ped Clear	0	16	0	16	0	16	0	16	0	16	0	16	0	16	0	16
Ped Clear 2	0	0	0	0	0	0	0	0	0	0	0	0	0	0	0	0
Ped Clear Max	0	0	0	0	0	0	0	0	0	0	0	0	0	0	0	0
Ped CO	0	0	0	0	0	0	0	0	0	0	0	0	0	0	0	0
Vehicle Ext	5.0	5.0	5.0	5.0	5.0	5.0	5.0	5.0	5.0	5.0	5.0	5.0	5.0	5.0	5.0	5.0
Vehicle Ext 2	0.0	0.0	0.0	0.0	0.0	0.0	0.0	0.0	0.0	0.0	0.0	0.0	0.0	0.0	0.0	0.0
Max1	35	35	35	35	35	35	35	35	35	35	35	35	35	35	35	35
Max2	40	40	40	40	40	40	40	40	40	40	40	40	40	40	40	40
Max3	0	0	0	0	0	0	0	0	0	0	0	0	0	0	0	0
DYM Max	0	0	0	0	0	0	0	0	0	0	0	0	0	0	0	0
Dym Step	0.0	0.0	0.0	0.0	0.0	0.0	0.0	0.0	0.0	0.0	0.0	0.0	0.0	0.0	0.0	0.0
Yellow	3.0	3.0	3.0	3.0	3.0	3.0	3.0	3.0	3.0	3.0	3.0	3.0	3.0	3.0	3.0	3.0
Red Clear	1.0	1.0	1.0	1.0	1.0	1.0	1.0	1.0	1.0	1.0	1.0	1.0	1.0	1.0	1.0	1.0
Red Max	0.0	0.0	0.0	0.0	0.0	0.0	0.0	0.0	0.0	0.0	0.0	0.0	0.0	0.0	0.0	0.0
Red Revert	2.0	2.0	2.0	2.0	2.0	2.0	2.0	2.0	2.0	2.0	2.0	2.0	2.0	2.0	2.0	2.0
Act B4	0	0	0	0	0	0	0	0	0	0	0	0	0	0	0	0
Sec/Act	0.0	0.0	0.0	0.0	0.0	0.0	0.0	0.0	0.0	0.0	0.0	0.0	0.0	0.0	0.0	0.0
Max Int	0	0	0	0	0	0	0	0	0	0	0	0	0	0	0	0
Time B4	0	0	0	0	0	0	0	0	0	0	0	0	0	0	0	0
Cars Wt	0	0	0	0	0	0	0	0	0	0	0	0	0	0	0	0

STPTDuc	0.0	0.0	0.0	0.0	0.0	0.0	0.0	0.0	0.0	0.0	0.0	0.0	0.0	0.0	0.0	0.0
TTReduc	0	0	0	0	0	0	0	0	0	0	0	0	0	0	0	0
Min Gap	0.0	0.0	0.0	0.0	0.0	0.0	0.0	0.0	0.0	0.0	0.0	0.0	0.0	0.0	0.0	0.0

Ontario, CA

"ECO NO LITE

C D M T R O L PRODUCTS, INC.

SoluLians LhaL Move the World™

Archibald Avenue @ Airport Drive - 10.211.54.61 - Cobalt - Econolite Type - Cobalt

Controller Overlaps

Vehicle Overlaps (MM) 2-2

Overlap	Type	Lag Green	Yellow	Red	Adv. Green

Phases

Overlap	Phase	Included	Protect	Ped Protect	Not Overlap	Modifier	Lag X Phases	Lag 2 Phases	Flash Green

PPLT FYA

Overlap	Protected Phase (Left Turn)	Permissive Phase (Opposing Thru)	Flashing Arrow Output	Flashing Arrow Output CH	Delay Start of FYA	Delay Start of Clearance	Action Plan SF Bit Disable	Ped Protected Enable

Guaranteed Minimum Time Data (MM) 2-4

Phase	Min Green	Walk	Ped Clear	Yellow	Red Clear	Overlap Green
A01	5	0	7	3.0	0.0	5
B02	5	0	7	3.0	0.0	5
C03	5	0	7	3.0	0.0	5
D04	5	0	7	3.0	0.0	5
E05	5	0	7	3.0	0.0	5
F06	5	0	7	3.0	0.0	5
G07	5	0	7	3.0	0.0	5
H08	5	0	7	3.0	0.0	5
I09	5	0	7	3.0	0.0	5
J10	5	0	7	3.0	0.0	5
K11	5	0	7	3.0	0.0	5
L12	5	0	7	3.0	0.0	5
M13	5	0	7	3.0	0.0	5
N14	5	0	7	3.0	0.0	5
O15	5	0	7	3.0	0.0	5
P16	5	0	7	3.0	0.0	5

Ontario, CA

IECONOLITE
C D M T R O L PRODUCTS, INC.
Solutions that Move the World™

Archibald Avenue @ Airport Drive - 10.211.54.61 - Cobalt - Econolite Type - Cobalt

Controller Pedestrian Overlaps
Vehicle / Pedestrian Overlaps (MM) 2-3

Included	Pedestrian Overlaps

Ontario, CA

IECONOLITE
C D M T R O L PRODUCTS, INC.
Solutions that Move the World™

Archibald Avenue @ Airport Drive - 10.211.54.61 - Cobalt - Econolite Type - Cobalt

Controller Start / Flash Data (MM) 2-5

Start Up

Phase	Phase Setting
1	.
2	Y
3	.
4	.
5	.
6	Y
7	.
8	.
9	.
10	.
11	.
12	.
13	.
14	.
15	.
16	.

Overlap
A
B
C
D

Flash Thru Mon: No
Flash Time: 0
All Red: 6
Power Start Seq: 1
MUTCD Enabled: No
Y->G: n/a

Automatic Flash

Entry
2
6

Exit
2
6

Overlap Exit
A
B
C
D

Flash Thru Mon: No
Exit Flash: W
Minimum Flash: 8
Mimimum Recall: No

Cycle Through Phase: No

Ontario, CA

"ECO NO LITE

C D M T R O L PRODUCTS, INC.

SoluLians LhaL Move the World™

Archibald Avenue @ Airport Drive - 10.211.54.61 - Cobalt - Econolite Type - Cobalt

Controller Options

Controller Options (MM) 2-6-1

Phase	1	2	3	4	5	6	7	8	9	10	11	12	13	14	15	16
Flashing Grn Ph	.	.	.	.	.	.	.	.	.	.	.	.	.	.	.	.
Guar Passage																
Non-Act I		X				X										
Non-Act II				X				X								
Dual Entry		X		X		X		X								
Cond Service																
Cond Reservice																
Ped Re-Service																
Rest In Walk																
Flashing Walk																
Ped Clr-Yel																
Ped Clr-Red																
IGRN + Veh Ext																

Ped Clear Protect: Off Unit Red Revert: 2.0 MUTCD 3 Seconds Don't Walk: No

Pre-Timed Mode (MM) 2-7

Enable Pre-Timed Mode: No Free Input Disables Pre-Timed: No

Phase	1	2	3	4	5	6	7	8	9	10	11	12	13	14	15	16
Pre-Timed																

Phase Recall Options (MM) 2-8

Plan # 1

	1	2	3	4	5	6	7	8	9	10	11	12	13	14	15	16
Lock Detector																
Vehicle Recall				X				X								
Ped Recall																
Max Recall																
Soft Recall																
No Rest																
AI Calc																

Ontario, CA

IECONOLITE
C D M T R O L PRODUCTS, INC.
Solutions that Move the World™

Archibald Avenue @ Airport Drive - 10.211.54.61 - Cobalt - Econolite Type - Cobalt

Coordination Options

Options (MM) 3-1

Manual Pattern	Auto	ECPI Coord	Yes
System Source	TBC	System Format	STD
Splits In	Seconds	Offsets In	Seconds
Transition	Smooth	Max Select	MAXINH
Dwell / Add Time	0		
Delay Coord Wk-LZ	No	Force Off	Float
Offset Reference	Lead	Use Ped Time	Yes
Ped Recall	No	Ped Reservice	No
Local Zero Override	No	FO Added Ini Green	No
Re-sync Count	0	Multisync	No

Auto Perm Minimum Green (Seconds) (MM) 3-4

Phase	1	2	3	4	5	6	7	8	9	10	11	12	13	14	15	16
Minimum Green	0	0	0	0	0	0	0	0	0	0	0	0	0	0	0	0

Split Demand (MM) 3-5

Phase	1	2	3	4	5	6	7	8	9	10	11	12	13	14	15	16
Demand 1																
Demand 2																

Demand	1	2
Detector	0	0
Call Time (Sec)	0	0
Cycle Count	0	0

Ontario, CA

IECONOLITE
C D M T R O L PRODUCTS, INC.

Solutions that Move the World™

Archibald Avenue @ Airport Drive - 10.211.54.61 - Cobalt - Econolite Type - Cobalt

Coordination Pattern Data
Coordinator Pattern Data (MM) 3-2

Ontario, CA

IECONOLITE
C D M T R O L PRODUCTS, INC.

Solutions that Move the World™

Archibald Avenue @ Airport Drive - 10.211.54.61 - Cobalt - Econolite Type - Cobalt

Coordination **Split Pattern**
Split Pattern Data (MM) 3-3

Ontario, CA

"ECO NO LITE
CONTROL PRODUCTS, INC.
Solutions that Move the World™

Archibald Avenue @ Airport Drive - 10.211.54.61 - Cobalt - Econolite Type - Cobalt

Preempt Plan

Preempt Plan (MM) 4-1

Preempt Plan 3

Phase	1	2	3	4	5	6	7	8	9	10	11	12	13	14	15	16
Overlap	A	B	C	D	E	F	G	H	I	J	K	L	M	N	O	P
Trk Clr Veh	.	.	.	.	.	.	.	.	.	.	.	.	.	.	.	.
Trk Clr Overlap	.	.	.	.	.	.	.	.	.	.	.	.	.	.	.	.
Enable Trailing																
Dwell Veh	.	X	.	.	X	.	.	.	.	.	.	.	.	.	.	.
Dwell Ped																
Dwell Overlap	.	.	.	.	.	.	.	.	.	.	.	.	.	.	.	.
Cycling Veh	.	.	.	.	.	.	.	.	.	.	.	.	.	.	.	.
Cycling Ped																
Cycling Overlap	.	.	.	.	.	.	.	.	.	.	.	.	.	.	.	.
Exit Phases																
Exit Calls																
Special Function																

Enable	Yes	Preempt Override	Yes	Interlock Enable	No
Det Lock	Yes	Delay	0	Inhibit	0
Override Flash	Yes	Duration	0	CLR > GRN	No
Term Ovlp Asap	No	PC Through Yel	No	Terminate Phase	No
Ped Dark	No	Track Clear Rsrv	No	Dwell Flash	Off
Linked Pmt	0	FL Exit Color	Grn	Exit Options	Off
Exit Timing Plan	0	Reservice	0	Fault Type	Hard

Ring	1	2	3	4
Free During Pmt	No	No	No	No

Timing	Walk	Ped Clr	Min Grn	Yellow	Red
Entrance	0	255	5	4.0	1.0
	Min Grn	Ext Grn	Max Grn	Yellow	Red
Track Clear	0	0	0	4.0	1.0
	Min Dwell	Pmt Ext	Max Time	Yellow	Red
Dwell / Cycle-Exit	0	0.0	0	4.0	1.0

Preemption Active Out	On	Preempt Act Dwell	No
Other - Priority Preempt	Off	Non-Priority Pmt	Off
Inhibit Extension Time	0.0	Ped Priority Return	Off
Veh Priority Return	Off	Queue Delay	Off
Conditional Delay	Off		

Phase	1	2	3	4	5	6	7	8	9	10	11	12	13	14	15	16
Veh Pri Return %	0	0	0	0	0	0	0	0	0	0	0	0	0	0	0	0

Preempt Plan 4

Phase	1	2	3	4	5	6	7	8	9	10	11	12	13	14	15	16
Overlap	A	B	C	D	E	F	G	H	I	J	K	L	M	N	O	P
Trk Clr Veh	.	.	.	.	.	.	.	.	.	.	.	.	.	.	.	.
Trk Clr Overlap	.	.	.	.	.	.	.	.	.	.	.	.	.	.	.	.
Enable Trailing																
Dwell Veh	X	.	.	.	.	X	.	.	.	.	.	.	.	.	.	.
Dwell Ped																
Dwell Overlap	.	.	.	.	.	.	.	.	.	.	.	.	.	.	.	.
Cycling Veh	.	.	.	.	.	.	.	.	.	.	.	.	.	.	.	.
Cycling Ped																
Cycling Overlap	.	.	.	.	.	.	.	.	.	.	.	.	.	.	.	.
Exit Phases																
Exit Calls																
Special Function																

Enable	Yes	Preempt Override	Yes	Interlock Enable	No
Det Lock	Yes	Delay	0	Inhibit	0
Override Flash	Yes	Duration	0	CLR > GRN	No
Term Ovlp Asap	No	PC Through Yel	No	Terminate Phase	No
Ped Dark	No	Track Clear Rsrv	No	Dwell Flash	Off
Linked Pmt	0	FL Exit Color	Grn	Exit Options	Off
Exit Timing Plan	0	Reservice	0	Fault Type	Hard

Ring	1	2	3	4
Free During Pmt	No	No	No	No

Timing	Walk	Ped Clr	Min Grn	Yellow	Red
Entrance	0	255	5	4.0	1.0
	Min Grn	**Ext Grn**	**Max Grn**	**Yellow**	**Red**
Track Clear	0	0	0	4.0	1.0
	Min Dwell	**Pmt Ext**	**Max Time**	**Yellow**	**Red**
Dwell / Cycle-Exit	0	0.0	0	4.0	1.0

Preemption Active Out	On	Preempt Act Dwell	No
Other - Priority Preempt	Off	Non-Priority Pmt	Off
Inhibit Extension Time	0.0	Ped Priority Return	Off
Veh Priority Return	Off	Queue Delay	Off
Conditional Delay	Off		

Phase	1	2	3	4	5	6	7	8	9	10	11	12	13	14	15	16
Veh Pri Return %	0	0	0	0	0	0	0	0	0	0	0	0	0	0	0	0

Preempt Plan 5

Phase	1	2	3	4	5	6	7	8	9	10	11	12	13	14	15	16
Overlap	A	B	C	D	E	F	G	H	I	J	K	L	M	N	O	P
Trk Clr Veh	.	.	.	.	.	.	.	.	.	.	.	.	.	.	.	.
Trk Clr Overlap	.	.	.	.	.	.	.	.	.	.	.	.	.	.	.	.
Enable Trailing																
Dwell Veh	.	.	.	X	.	.	X	.	.	.	.	.	.	.	.	.
Dwell Ped																
Dwell Overlap	.	.	.	.	.	.	.	.	.	.	.	.	.	.	.	.
Cycling Veh	.	.	.	.	.	.	.	.	.	.	.	.	.	.	.	.
Cycling Ped																
Cycling Overlap	.	.	.	.	.	.	.	.	.	.	.	.	.	.	.	.
Exit Phases																
Exit Calls																
Special Function																

Enable	Yes	Preempt Override	Yes	Interlock Enable	No
Det Lock	Yes	Delay	0	Inhibit	0
Override Flash	Yes	Duration	0	CLR > GRN	No
Term Ovlp Asap	No	PC Through Yel	No	Terminate Phase	No
Ped Dark	No	Track Clear Rsrv	No	Dwell Flash	Off
Linked Pmt	0	FL Exit Color	Grn	Exit Options	Off
Exit Timing Plan	0	Reservice	0	Fault Type	Hard

Ring	1	2	3	4
Free During Pmt	No	No	No	No

Timing	Walk	Ped Clr	Min Grn	Yellow	Red
Entrance	0	255	5	4.0	1.0
	Min Grn	**Ext Grn**	**Max Grn**	**Yellow**	**Red**
Track Clear	0	0	0	4.0	1.0
	Min Dwell	**Pmt Ext**	**Max Time**	**Yellow**	**Red**
Dwell / Cycle-Exit	0	0.0	0	4.0	1.0

Preemption Active Out	On	Preempt Act Dwell	No
Other - Priority Preempt	Off	Non-Priority Pmt	Off
Inhibit Extension Time	0.0	Ped Priority Return	Off
Veh Priority Return	Off	Queue Delay	Off
Conditional Delay	Off		

Phase	1	2	3	4	5	6	7	8	9	10	11	12	13	14	15	16
Veh Pri Return %	0	0	0	0	0	0	0	0	0	0	0	0	0	0	0	0

Preempt Plan 6

Phase	1	2	3	4	5	6	7	8	9	10	11	12	13	14	15	16
Overlap	A	B	C	D	E	F	G	H	I	J	K	L	M	N	O	P
Trk Clr Veh	.	.	.	.	.	.	.	.	.	.	.	.	.	.	.	.
Trk Clr Overlap	.	.	.	.	.	.	.	.	.	.	.	.	.	.	.	.
Enable Trailing																
Dwell Veh	.	.	X	.	.	.	.	X	.	.	.	.	.	.	.	.
Dwell Ped																
Dwell Overlap	.	.	.	.	.	.	.	.	.	.	.	.	.	.	.	.
Cycling Veh	.	.	.	.	.	.	.	.	.	.	.	.	.	.	.	.
Cycling Ped																
Cycling Overlap	.	.	.	.	.	.	.	.	.	.	.	.	.	.	.	.
Exit Phases																
Exit Calls																
Special Function																

Enable	Yes	Preempt Override	Yes	Interlock Enable	No
Det Lock	Yes	Delay	0	Inhibit	0
Override Flash	Yes	Duration	0	CLR > GRN	No
Term Ovlp Asap	No	PC Through Yel	No	Terminate Phase	No
Ped Dark	No	Track Clear Rsrv	No	Dwell Flash	Off
Linked Pmt	0	FL Exit Color	Grn	Exit Options	Off
Exit Timing Plan	0	Reservice	0	Fault Type	Hard

Ring	1	2	3	4
Free During Pmt	No	No	No	No

Timing	Walk	Ped Clr	Min Grn	Yellow	Red
Entrance	0	255	5	4.0	1.0
	Min Grn	**Ext Grn**	**Max Grn**	**Yellow**	**Red**
Track Clear	0	0	0	4.0	1.0
	Min Dwell	**Pmt Ext**	**Max Time**	**Yellow**	**Red**
Dwell / Cycle-Exit	0	0.0	0	4.0	1.0

Preemption Active Out	On	Preempt Act Dwell	No
Other - Priority Preempt	Off	Non-Priority Pmt	Off
Inhibit Extension Time	0.0	Ped Priority Return	Off
Veh Priority Return	Off	Queue Delay	Off
Conditional Delay	Off		

Phase	1	2	3	4	5	6	7	8	9	10	11	12	13	14	15	16
Veh Pri Return %	0	0	0	0	0	0	0	0	0	0	0	0	0	0	0	0

Ontario, CA

IECONOLITE
C D M T R O L PRODUCTS, INC.
Solutions that Move the World™

Archibald Avenue @ Airport Drive - 10.211.54.61 - Cobalt - Econolite Type - Cobalt

Preempt Preempt Filtering
Enable Preempt Filtering & TSP/SCP (MM) 4-2

Input	Solid	Pulsing
1	...BYPASSED...	...BYPASSED...
2	...BYPASSED...	...BYPASSED...
3	PREEMPTION 3	PREEMPTION 7
4	PREEMPTION 4	PREEMPTION 8
5	PREEMPTION 5	PREEMPTION 9
6	PREEMPTION 6	PREEMPTION 10
7	...BYPASSED...	...BYPASSED...
8	...BYPASSED...	...BYPASSED...
9	...BYPASSED...	...BYPASSED...
10	...BYPASSED...	...BYPASSED...

Ontario, CA

"ECO NO LITE
C D M T R O L PRODUCTS, INC.
SoluLians LhaL Move the World™

Archibald Avenue @ Airport Drive - 10.211.54.61 - Cobalt - Econolite Type - Cobalt

Preempt TSP/SCP Plan and Split

TSP / SCP Plan (MM) 4-3

TSP/SCP Plan	Enable Option	Signal Type	Det Lock	Delay Time	Max Presence	PMT Enables Reservice	No Delay in TSP	Action SF Inhibit	Reservice Cycles	Bus Heading
1	No	Solid	No	0	0	No	False	0	0	NB
2	No	Solid	No	0	0	No	False	0	0	SB
3	No	Solid	No	0	0	No	False	0	0	EB
4	No	Solid	No	0	0	No	False	0	0	WB
5	No	Solid	No	0	0	No	False	0	0	.
6	No	Solid	No	0	0	No	False	0	0	.

Mode: TSP
Free Default Pattern: 120
Headway Allowance: 0

TSP/SCP Plan	1	2	3	4	5	6	7	8	9	10	11	12	13	14	15	16
1	.	.	.	.	.	.	.	.	.	.	.	.	.	.	.	.
2	.	.	.	.	.	.	.	.	.	.	.	.	.	.	.	.
3	.	.	.	.	.	.	.	.	.	.	.	.	.	.	.	.
4	.	.	.	.	.	.	.	.	.	.	.	.	.	.	.	.
5	.	.	.	.	.	.	.	.	.	.	.	.	.	.	.	.
6	.	.	.	.	.	.	.	.	.	.	.	.	.	.	.	.

TSP / SCP Split Pattern (MM) 4-4

TSP/SCP Split Pattern	Max Type	Phase															
		1	2	3	4	5	6	7	8	9	10	11	12	13	14	15	16
4	Max Reduction	255	255	255	255	255	255	255	255	255	255	255	255	255	255	255	255

Ontario, CA

IECONOLITE
C D M T R O L PRODUCTS, INC.
Solutions that Move the World™

Archibald Avenue @ Airport Drive - 10.211.54.61 - Cobalt - Econolite Type - Cobalt

Time Base Clock/Calendar
Clock/Calendar Data (MM) 5-1

Manual Action Plan:	0
SYNC Reference Time:	00:00
SYNC Reference:	Reference Time
Day Light Savings:	No
Time Reset Input Set Time:	3:30:00
Standard Time From GMT:	0

Ontario, CA

IECONOLITE
C D M T R O L PRODUCTS, INC.
Solutions that Move the World™

Archibald Avenue @ Airport Drive - 10.211.54.61 - Cobalt - Econolite Type - Cobalt

Time Base Action Plan
Action Plan (MM) 5-2

Ontario, CA

IECONOLITE
C D M T R O L PRODUCTS, INC.
Solutions that Move the World™

Archibald Avenue @ Airport Drive - 10.211.54.61 - Cobalt - Econolite Type - Cobalt

Time Base Day Plan/Schedule
Day Plan (MM) 5-3

Schedule (MM) 5-4

Ontario, CA

IECONOLITE
C D M T R O L PRODUCTS, INC.
Solutions that Move the World™

Archibald Avenue @ Airport Drive - 10.211.54.61 - Cobalt - Econolite Type - Cobalt

Time Base Exceptions
Exception Day Program (MM) 5-5

Excep Day	Float/Fixed	Mon/Mon	DOW/DOM	WOM/Year	Day Plan

Ontario, CA

"ECO NO LITE
C D M T R O L PRODUCTS, INC.
Solutions that Move the World™

Archibald Avenue @ Airport Drive - 10.211.54.61 - Cobalt - Econolite Type - Cobalt

Detectors

Detectors - Pg 1

Veh Det Phase Assignment (MM) 6-1

Vehicle Detector Plan Number - 1

Veh Detector	Called Phase	Type

Vehicle Detector Plan Number - 2

Veh Detector	Called Phase	Type

Vehicle Detector Plan Number - 3

Veh Detector	Called Phase	Type

Vehicle Detector Plan Number - 4

Veh Detector	Called Phase	Type

Vehicle Detector Setup (MM) 6-2

Veh Detector	Type	TS2 Detector	Description
1	S-STANDARD	Yes	
2	S-STANDARD	Yes	
3	S-STANDARD	Yes	
4	S-STANDARD	Yes	
5	S-STANDARD	Yes	
6	S-STANDARD	Yes	
7	S-STANDARD	Yes	
8	S-STANDARD	Yes	
9	S-STANDARD	Yes	
10	S-STANDARD	Yes	
11	S-STANDARD	Yes	
12	S-STANDARD	Yes	
13	S-STANDARD	Yes	
14	S-STANDARD	Yes	
15	S-STANDARD	Yes	
16	S-STANDARD	Yes	
17	S-STANDARD	Yes	
18	S-STANDARD	Yes	
19	S-STANDARD	Yes	
20	D-DISCONNECT	Yes	
21	S-STANDARD	Yes	
22	S-STANDARD	Yes	
23	S-STANDARD	Yes	
24	S-STANDARD	Yes	
25	S-STANDARD	Yes	
26	S-STANDARD	Yes	
27	S-STANDARD	Yes	
28	S-STANDARD	Yes	
29	S-STANDARD	Yes	
30	S-STANDARD	Yes	
31	S-STANDARD	Yes	
32	S-STANDARD	Yes	
33	S-STANDARD	Yes	
34	S-STANDARD	Yes	

35	S-STANDARD	Yes	
36	S-STANDARD	Yes	
37	S-STANDARD	Yes	
38	S-STANDARD	Yes	
39	S-STANDARD	Yes	
40	S-STANDARD	Yes	
41	S-STANDARD	Yes	
42	S-STANDARD	Yes	
43	S-STANDARD	Yes	
44	S-STANDARD	Yes	
45	S-STANDARD	Yes	
46	S-STANDARD	Yes	
47	S-STANDARD	Yes	
48	S-STANDARD	Yes	
49	S-STANDARD	Yes	
50	S-STANDARD	Yes	
51	S-STANDARD	Yes	
52	S-STANDARD	Yes	
53	S-STANDARD	Yes	
54	S-STANDARD	Yes	
55	S-STANDARD	Yes	
56	S-STANDARD	Yes	
57	S-STANDARD	Yes	
58	S-STANDARD	Yes	
59	S-STANDARD	Yes	
60	S-STANDARD	Yes	
61	S-STANDARD	Yes	
62	S-STANDARD	Yes	
63	S-STANDARD	Yes	
64	S-STANDARD	Yes	

Vehicle Detector Plan Number - 1

Veh Detector	Phase	ECPI Log	Call Option	Delay Time	Ext Option	Extend Time / Passage Time	Queue Lim. / Discon. Time	Use Added Initial	Cross Switch Ph	Lock In	NTCIP Vol.	NTCIP Occ.	Pmt Queue Delay
1	1	No	Yes	2.0	Passage	0.0	0	No	0	None	No	No	No
2	2	No	Yes	2.0	Passage	0.0	0	No	0	None	No	No	No
3	2	No	Yes	2.0	Passage	0.0	0	No	0	None	No	No	No
4	0	No	Yes	0.0	Passage	0.0	0	No	0	None	No	No	No
5	3	No	Yes	2.0	Passage	0.0	0	No	0	None	No	No	No
6	4	No	Yes	0.0	Passage	0.0	0	No	0	None	No	No	No
7	4	No	Yes	0.0	Passage	0.0	0	No	0	None	No	No	No
8	0	No	Yes	0.0	Passage	0.0	0	No	0	None	No	No	No
9	0	No	Yes	0.0	Passage	0.0	0	No	0	None	No	No	No
10	2	No	Yes	2.0	Passage	0.0	0	No	0	None	No	No	No
11	2	No	Yes	2.0	Passage	0.0	0	No	0	None	No	No	No
12	0	No	Yes	0.0	Passage	0.0	0	No	0	None	No	No	No
13	0	No	Yes	0.0	Passage	0.0	0	No	0	None	No	No	No
14	4	No	Yes	0.0	Passage	0.0	0	No	0	None	No	No	No
15	4	No	Yes	0.0	Passage	0.0	0	No	0	None	No	No	No
16	0	No	Yes	0.0	Passage	0.0	0	No	0	None	No	No	No
17	5	No	Yes	2.0	Passage	0.0	0	No	0	None	No	No	No
18	6	No	Yes	2.0	Passage	0.0	0	No	0	None	No	No	No
19	6	No	Yes	2.0	Passage	0.0	0	No	0	None	No	No	No
20	0	No	Yes	0.0	Queue	0.0	0	No	0	None	No	No	No
21	7	No	Yes	2.0	Passage	0.0	0	No	0	None	No	No	No
22	8	No	Yes	0.0	Passage	0.0	0	No	0	None	No	No	No
23	8	No	Yes	0.0	Passage	0.0	0	No	0	None	No	No	No
24	0	No	Yes	0.0	Passage	0.0	0	No	0	None	No	No	No
25	0	No	Yes	0.0	Passage	0.0	0	No	0	None	No	No	No
26	6	No	Yes	0.0	Passage	0.0	0	No	0	None	No	No	No
27	6	No	Yes	0.0	Passage	0.0	0	No	0	None	No	No	No

28	0	No	Yes	0.0	Passage	0.0	0	No	0	None	No	No	No
29	0	No	Yes	0.0	Passage	0.0	0	No	0	None	No	No	No
30	0	No	Yes	0.0	Passage	0.0	0	No	0	None	No	No	No
31	0	No	Yes	0.0	Passage	0.0	0	No	0	None	No	No	No
32	0	No	Yes	0.0	Passage	0.0	0	No	0	None	No	No	No
33	0	No	Yes	0.0	Passage	0.0	0	No	0	None	No	No	No
34	0	No	Yes	0.0	Passage	0.0	0	No	0	None	No	No	No
35	0	No	Yes	0.0	Passage	0.0	0	No	0	None	No	No	No
36	0	No	Yes	0.0	Passage	0.0	0	No	0	None	No	No	No
37	0	No	Yes	0.0	Passage	0.0	0	No	0	None	No	No	No
38	0	No	Yes	0.0	Passage	0.0	0	No	0	None	No	No	No
39	0	No	Yes	0.0	Passage	0.0	0	No	0	None	No	No	No
40	0	No	Yes	0.0	Passage	0.0	0	No	0	None	No	No	No
41	0	No	Yes	0.0	Passage	0.0	0	No	0	None	No	No	No
42	0	No	Yes	0.0	Passage	0.0	0	No	0	None	No	No	No
43	0	No	Yes	0.0	Passage	0.0	0	No	0	None	No	No	No
44	0	No	Yes	0.0	Passage	0.0	0	No	0	None	No	No	No
45	0	No	Yes	0.0	Passage	0.0	0	No	0	None	No	No	No
46	0	No	Yes	0.0	Passage	0.0	0	No	0	None	No	No	No
47	0	No	Yes	0.0	Passage	0.0	0	No	0	None	No	No	No
48	0	No	Yes	0.0	Passage	0.0	0	No	0	None	No	No	No
49	0	No	Yes	0.0	Passage	0.0	0	No	0	None	No	No	No
50	0	No	Yes	0.0	Passage	0.0	0	No	0	None	No	No	No
51	0	No	Yes	0.0	Passage	0.0	0	No	0	None	No	No	No
52	0	No	Yes	0.0	Passage	0.0	0	No	0	None	No	No	No
53	0	No	Yes	0.0	Passage	0.0	0	No	0	None	No	No	No
54	0	No	Yes	0.0	Passage	0.0	0	No	0	None	No	No	No
55	0	No	Yes	0.0	Passage	0.0	0	No	0	None	No	No	No
56	0	No	Yes	0.0	Passage	0.0	0	No	0	None	No	No	No
57	0	No	Yes	0.0	Passage	0.0	0	No	0	None	No	No	No
58	0	No	Yes	0.0	Passage	0.0	0	No	0	None	No	No	No
59	0	No	Yes	0.0	Passage	0.0	0	No	0	None	No	No	No
60	0	No	Yes	0.0	Passage	0.0	0	No	0	None	No	No	No
61	0	No	Yes	0.0	Passage	0.0	0	No	0	None	No	No	No
62	0	No	Yes	0.0	Passage	0.0	0	No	0	None	No	No	No
63	0	No	Yes	0.0	Passage	0.0	0	No	0	None	No	No	No
64	0	No	Yes	0.0	Passage	0.0	0	No	0	None	No	No	No

Vehicle Detector Plan Number - 2

Veh Detector	Phase	ECPI Log	Call Option	Delay Time	Ext Option	Extend Time / Passage Time	Queue Lim. / Discon. Time	Use Added Initial	Cross Switch Ph	Lock In	NTCIP Vol.	NTCIP Occ.	Pmt Queue Delay
1	1	No	Yes	0.0	Passage	0.0	0	No	0	None	No	No	No
2	2	No	Yes	0.0	Passage	0.0	0	No	0	None	No	No	No
3	3	No	Yes	0.0	Passage	0.0	0	No	0	None	No	No	No
4	4	No	Yes	0.0	Passage	0.0	0	No	0	None	No	No	No
5	5	No	Yes	0.0	Passage	0.0	0	No	0	None	No	No	No
6	6	No	Yes	0.0	Passage	0.0	0	No	0	None	No	No	No
7	7	No	Yes	0.0	Passage	0.0	0	No	0	None	No	No	No
8	8	No	Yes	0.0	Passage	0.0	0	No	0	None	No	No	No
9	2	No	Yes	0.0	Passage	0.0	0	No	0	None	No	No	No
10	2	No	Yes	0.0	Passage	0.0	0	No	0	None	No	No	No
11	4	No	Yes	0.0	Passage	0.0	0	No	0	None	No	No	No
12	4	No	Yes	0.0	Passage	0.0	0	No	0	None	No	No	No
13	6	No	Yes	0.0	Passage	0.0	0	No	0	None	No	No	No
14	6	No	Yes	0.0	Passage	0.0	0	No	0	None	No	No	No
15	8	No	Yes	0.0	Passage	0.0	0	No	0	None	No	No	No
16	8	No	Yes	0.0	Passage	0.0	0	No	0	None	No	No	No
17	1	No	Yes	0.0	Passage	0.0	0	No	0	None	No	No	No
18	2	No	Yes	0.0	Passage	0.0	0	No	0	None	No	No	No
19	3	No	Yes	0.0	Passage	0.0	0	No	0	None	No	No	No
20	4	No	Yes	0.0	Queue	0.0	0	No	0	None	No	No	No
21	5	No	Yes	0.0	Passage	0.0	0	No	0	None	No	No	No

22	6	No	Yes	0.0	Passage	0.0	0	No	0	None	No	No	No
23	7	No	Yes	0.0	Passage	0.0	0	No	0	None	No	No	No
24	8	No	Yes	0.0	Passage	0.0	0	No	0	None	No	No	No
25	2	No	Yes	0.0	Passage	0.0	0	No	0	None	No	No	No
26	4	No	Yes	0.0	Passage	0.0	0	No	0	None	No	No	No
27	6	No	Yes	0.0	Passage	0.0	0	No	0	None	No	No	No
28	8	No	Yes	0.0	Passage	0.0	0	No	0	None	No	No	No
29	0	No	Yes	0.0	Passage	0.0	0	No	0	None	No	No	No
30	0	No	Yes	0.0	Passage	0.0	0	No	0	None	No	No	No
31	0	No	Yes	0.0	Passage	0.0	0	No	0	None	No	No	No
32	0	No	Yes	0.0	Passage	0.0	0	No	0	None	No	No	No
33	0	No	Yes	0.0	Passage	0.0	0	No	0	None	No	No	No
34	0	No	Yes	0.0	Passage	0.0	0	No	0	None	No	No	No
35	0	No	Yes	0.0	Passage	0.0	0	No	0	None	No	No	No
36	0	No	Yes	0.0	Passage	0.0	0	No	0	None	No	No	No
37	0	No	Yes	0.0	Passage	0.0	0	No	0	None	No	No	No
38	0	No	Yes	0.0	Passage	0.0	0	No	0	None	No	No	No
39	0	No	Yes	0.0	Passage	0.0	0	No	0	None	No	No	No
40	0	No	Yes	0.0	Passage	0.0	0	No	0	None	No	No	No
41	0	No	Yes	0.0	Passage	0.0	0	No	0	None	No	No	No
42	0	No	Yes	0.0	Passage	0.0	0	No	0	None	No	No	No
43	0	No	Yes	0.0	Passage	0.0	0	No	0	None	No	No	No
44	0	No	Yes	0.0	Passage	0.0	0	No	0	None	No	No	No
45	0	No	Yes	0.0	Passage	0.0	0	No	0	None	No	No	No
46	0	No	Yes	0.0	Passage	0.0	0	No	0	None	No	No	No
47	0	No	Yes	0.0	Passage	0.0	0	No	0	None	No	No	No
48	0	No	Yes	0.0	Passage	0.0	0	No	0	None	No	No	No
49	0	No	Yes	0.0	Passage	0.0	0	No	0	None	No	No	No
50	0	No	Yes	0.0	Passage	0.0	0	No	0	None	No	No	No
51	0	No	Yes	0.0	Passage	0.0	0	No	0	None	No	No	No
52	0	No	Yes	0.0	Passage	0.0	0	No	0	None	No	No	No
53	0	No	Yes	0.0	Passage	0.0	0	No	0	None	No	No	No
54	0	No	Yes	0.0	Passage	0.0	0	No	0	None	No	No	No
55	0	No	Yes	0.0	Passage	0.0	0	No	0	None	No	No	No
56	0	No	Yes	0.0	Passage	0.0	0	No	0	None	No	No	No
57	0	No	Yes	0.0	Passage	0.0	0	No	0	None	No	No	No
58	0	No	Yes	0.0	Passage	0.0	0	No	0	None	No	No	No
59	0	No	Yes	0.0	Passage	0.0	0	No	0	None	No	No	No
60	0	No	Yes	0.0	Passage	0.0	0	No	0	None	No	No	No
61	0	No	Yes	0.0	Passage	0.0	0	No	0	None	No	No	No
62	0	No	Yes	0.0	Passage	0.0	0	No	0	None	No	No	No
63	0	No	Yes	0.0	Passage	0.0	0	No	0	None	No	No	No
64	0	No	Yes	0.0	Passage	0.0	0	No	0	None	No	No	No

Vehicle Detector Plan Number - 3

Veh Detector	Phase	ECPI Log	Call Option	Delay Time	Ext Option	Extend Time / Passage Time	Queue Lim. / Discon. Time	Use Added Initial	Cross Switch Ph	Lock In	NTCIP Vol.	NTCIP Occ.	Pmt Queue Delay
1	1	No	Yes	0.0	Passage	0.0	0	No	0	None	No	No	No
2	2	No	Yes	0.0	Passage	0.0	0	No	0	None	No	No	No
3	3	No	Yes	0.0	Passage	0.0	0	No	0	None	No	No	No
4	4	No	Yes	0.0	Passage	0.0	0	No	0	None	No	No	No
5	5	No	Yes	0.0	Passage	0.0	0	No	0	None	No	No	No
6	6	No	Yes	0.0	Passage	0.0	0	No	0	None	No	No	No
7	7	No	Yes	0.0	Passage	0.0	0	No	0	None	No	No	No
8	8	No	Yes	0.0	Passage	0.0	0	No	0	None	No	No	No
9	2	No	Yes	0.0	Passage	0.0	0	No	0	None	No	No	No
10	2	No	Yes	0.0	Passage	0.0	0	No	0	None	No	No	No
11	4	No	Yes	0.0	Passage	0.0	0	No	0	None	No	No	No
12	4	No	Yes	0.0	Passage	0.0	0	No	0	None	No	No	No
13	6	No	Yes	0.0	Passage	0.0	0	No	0	None	No	No	No
14	6	No	Yes	0.0	Passage	0.0	0	No	0	None	No	No	No
15	8	No	Yes	0.0	Passage	0.0	0	No	0	None	No	No	No

16	8	No	Yes	0.0	Passage	0.0	0	No	0	None	No	No	No
17	1	No	Yes	0.0	Passage	0.0	0	No	0	None	No	No	No
18	2	No	Yes	0.0	Passage	0.0	0	No	0	None	No	No	No
19	3	No	Yes	0.0	Passage	0.0	0	No	0	None	No	No	No
20	4	No	Yes	0.0	Queue	0.0	0	No	0	None	No	No	No
21	5	No	Yes	0.0	Passage	0.0	0	No	0	None	No	No	No
22	6	No	Yes	0.0	Passage	0.0	0	No	0	None	No	No	No
23	7	No	Yes	0.0	Passage	0.0	0	No	0	None	No	No	No
24	8	No	Yes	0.0	Passage	0.0	0	No	0	None	No	No	No
25	2	No	Yes	0.0	Passage	0.0	0	No	0	None	No	No	No
26	4	No	Yes	0.0	Passage	0.0	0	No	0	None	No	No	No
27	6	No	Yes	0.0	Passage	0.0	0	No	0	None	No	No	No
28	8	No	Yes	0.0	Passage	0.0	0	No	0	None	No	No	No
29	0	No	Yes	0.0	Passage	0.0	0	No	0	None	No	No	No
30	0	No	Yes	0.0	Passage	0.0	0	No	0	None	No	No	No
31	0	No	Yes	0.0	Passage	0.0	0	No	0	None	No	No	No
32	0	No	Yes	0.0	Passage	0.0	0	No	0	None	No	No	No
33	0	No	Yes	0.0	Passage	0.0	0	No	0	None	No	No	No
34	0	No	Yes	0.0	Passage	0.0	0	No	0	None	No	No	No
35	0	No	Yes	0.0	Passage	0.0	0	No	0	None	No	No	No
36	0	No	Yes	0.0	Passage	0.0	0	No	0	None	No	No	No
37	0	No	Yes	0.0	Passage	0.0	0	No	0	None	No	No	No
38	0	No	Yes	0.0	Passage	0.0	0	No	0	None	No	No	No
39	0	No	Yes	0.0	Passage	0.0	0	No	0	None	No	No	No
40	0	No	Yes	0.0	Passage	0.0	0	No	0	None	No	No	No
41	0	No	Yes	0.0	Passage	0.0	0	No	0	None	No	No	No
42	0	No	Yes	0.0	Passage	0.0	0	No	0	None	No	No	No
43	0	No	Yes	0.0	Passage	0.0	0	No	0	None	No	No	No
44	0	No	Yes	0.0	Passage	0.0	0	No	0	None	No	No	No
45	0	No	Yes	0.0	Passage	0.0	0	No	0	None	No	No	No
46	0	No	Yes	0.0	Passage	0.0	0	No	0	None	No	No	No
47	0	No	Yes	0.0	Passage	0.0	0	No	0	None	No	No	No
48	0	No	Yes	0.0	Passage	0.0	0	No	0	None	No	No	No
49	0	No	Yes	0.0	Passage	0.0	0	No	0	None	No	No	No
50	0	No	Yes	0.0	Passage	0.0	0	No	0	None	No	No	No
51	0	No	Yes	0.0	Passage	0.0	0	No	0	None	No	No	No
52	0	No	Yes	0.0	Passage	0.0	0	No	0	None	No	No	No
53	0	No	Yes	0.0	Passage	0.0	0	No	0	None	No	No	No
54	0	No	Yes	0.0	Passage	0.0	0	No	0	None	No	No	No
55	0	No	Yes	0.0	Passage	0.0	0	No	0	None	No	No	No
56	0	No	Yes	0.0	Passage	0.0	0	No	0	None	No	No	No
57	0	No	Yes	0.0	Passage	0.0	0	No	0	None	No	No	No
58	0	No	Yes	0.0	Passage	0.0	0	No	0	None	No	No	No
59	0	No	Yes	0.0	Passage	0.0	0	No	0	None	No	No	No
60	0	No	Yes	0.0	Passage	0.0	0	No	0	None	No	No	No
61	0	No	Yes	0.0	Passage	0.0	0	No	0	None	No	No	No
62	0	No	Yes	0.0	Passage	0.0	0	No	0	None	No	No	No
63	0	No	Yes	0.0	Passage	0.0	0	No	0	None	No	No	No
64	0	No	Yes	0.0	Passage	0.0	0	No	0	None	No	No	No

Vehicle Detector Plan Number - 4

Veh Detector	Phase	ECPI Log	Call Option	Delay Time	Ext Option	Extend Time / Passage Time	Queue Lim. / Discon. Time	Use Added Initial	Cross Switch Ph	Lock In	NTCIP Vol.	NTCIP Occ.	Pmt Queue Delay
1	1	No	Yes	0.0	Passage	0.0	0	No	0	None	No	No	No
2	2	No	Yes	0.0	Passage	0.0	0	No	0	None	No	No	No
3	3	No	Yes	0.0	Passage	0.0	0	No	0	None	No	No	No
4	4	No	Yes	0.0	Passage	0.0	0	No	0	None	No	No	No
5	5	No	Yes	0.0	Passage	0.0	0	No	0	None	No	No	No
6	6	No	Yes	0.0	Passage	0.0	0	No	0	None	No	No	No
7	7	No	Yes	0.0	Passage	0.0	0	No	0	None	No	No	No
8	8	No	Yes	0.0	Passage	0.0	0	No	0	None	No	No	No
9	2	No	Yes	0.0	Passage	0.0	0	No	0	None	No	No	No

10	2	No	Yes	0.0	Passage	0.0	0	No	0	None	No	No	No
11	4	No	Yes	0.0	Passage	0.0	0	No	0	None	No	No	No
12	4	No	Yes	0.0	Passage	0.0	0	No	0	None	No	No	No
13	6	No	Yes	0.0	Passage	0.0	0	No	0	None	No	No	No
14	6	No	Yes	0.0	Passage	0.0	0	No	0	None	No	No	No
15	8	No	Yes	0.0	Passage	0.0	0	No	0	None	No	No	No
16	8	No	Yes	0.0	Passage	0.0	0	No	0	None	No	No	No
17	1	No	Yes	0.0	Passage	0.0	0	No	0	None	No	No	No
18	2	No	Yes	0.0	Passage	0.0	0	No	0	None	No	No	No
19	3	No	Yes	0.0	Passage	0.0	0	No	0	None	No	No	No
20	4	No	Yes	0.0	Queue	0.0	0	No	0	None	No	No	No
21	5	No	Yes	0.0	Passage	0.0	0	No	0	None	No	No	No
22	6	No	Yes	0.0	Passage	0.0	0	No	0	None	No	No	No
23	7	No	Yes	0.0	Passage	0.0	0	No	0	None	No	No	No
24	8	No	Yes	0.0	Passage	0.0	0	No	0	None	No	No	No
25	2	No	Yes	0.0	Passage	0.0	0	No	0	None	No	No	No
26	4	No	Yes	0.0	Passage	0.0	0	No	0	None	No	No	No
27	6	No	Yes	0.0	Passage	0.0	0	No	0	None	No	No	No
28	8	No	Yes	0.0	Passage	0.0	0	No	0	None	No	No	No
29	0	No	Yes	0.0	Passage	0.0	0	No	0	None	No	No	No
30	0	No	Yes	0.0	Passage	0.0	0	No	0	None	No	No	No
31	0	No	Yes	0.0	Passage	0.0	0	No	0	None	No	No	No
32	0	No	Yes	0.0	Passage	0.0	0	No	0	None	No	No	No
33	0	No	Yes	0.0	Passage	0.0	0	No	0	None	No	No	No
34	0	No	Yes	0.0	Passage	0.0	0	No	0	None	No	No	No
35	0	No	Yes	0.0	Passage	0.0	0	No	0	None	No	No	No
36	0	No	Yes	0.0	Passage	0.0	0	No	0	None	No	No	No
37	0	No	Yes	0.0	Passage	0.0	0	No	0	None	No	No	No
38	0	No	Yes	0.0	Passage	0.0	0	No	0	None	No	No	No
39	0	No	Yes	0.0	Passage	0.0	0	No	0	None	No	No	No
40	0	No	Yes	0.0	Passage	0.0	0	No	0	None	No	No	No
41	0	No	Yes	0.0	Passage	0.0	0	No	0	None	No	No	No
42	0	No	Yes	0.0	Passage	0.0	0	No	0	None	No	No	No
43	0	No	Yes	0.0	Passage	0.0	0	No	0	None	No	No	No
44	0	No	Yes	0.0	Passage	0.0	0	No	0	None	No	No	No
45	0	No	Yes	0.0	Passage	0.0	0	No	0	None	No	No	No
46	0	No	Yes	0.0	Passage	0.0	0	No	0	None	No	No	No
47	0	No	Yes	0.0	Passage	0.0	0	No	0	None	No	No	No
48	0	No	Yes	0.0	Passage	0.0	0	No	0	None	No	No	No
49	0	No	Yes	0.0	Passage	0.0	0	No	0	None	No	No	No
50	0	No	Yes	0.0	Passage	0.0	0	No	0	None	No	No	No
51	0	No	Yes	0.0	Passage	0.0	0	No	0	None	No	No	No
52	0	No	Yes	0.0	Passage	0.0	0	No	0	None	No	No	No
53	0	No	Yes	0.0	Passage	0.0	0	No	0	None	No	No	No
54	0	No	Yes	0.0	Passage	0.0	0	No	0	None	No	No	No
55	0	No	Yes	0.0	Passage	0.0	0	No	0	None	No	No	No
56	0	No	Yes	0.0	Passage	0.0	0	No	0	None	No	No	No
57	0	No	Yes	0.0	Passage	0.0	0	No	0	None	No	No	No
58	0	No	Yes	0.0	Passage	0.0	0	No	0	None	No	No	No
59	0	No	Yes	0.0	Passage	0.0	0	No	0	None	No	No	No
60	0	No	Yes	0.0	Passage	0.0	0	No	0	None	No	No	No
61	0	No	Yes	0.0	Passage	0.0	0	No	0	None	No	No	No
62	0	No	Yes	0.0	Passage	0.0	0	No	0	None	No	No	No
63	0	No	Yes	0.0	Passage	0.0	0	No	0	None	No	No	No
64	0	No	Yes	0.0	Passage	0.0	0	No	0	None	No	No	No

Ped Detector Phase Assignment (MM) 6-3

Mode: NTCIP

Called Phase	Detector
1	1
2	2
3	3
4	4

5	5
6	6
7	7
8	8
9	9
10	10
11	11
12	12
13	13
14	14
15	15
16	16

Ontario, CA

"ECO NO LITE
C D M T R O L PRODUCTS, INC.
SoluLians LhaL Move the World™

Archibald Avenue @ Airport Drive - 10.211.54.61 - Cobalt - Econolite Type - Cobalt

Detectors

Detectors - Pg 2

Log - Speed Detector Setup (MM) 6-4
NTCIP Log Period: 60 ECPI Log Period: 0 Length Unit: Inches

Speed Detector	Local Detector	One/Two Detector	Vehicle Length	Trap length	Enable Log
1	0	1	0	0	No
2	0	1	0	0	No
3	0	1	0	0	No
4	0	1	0	0	No
5	0	1	0	0	No
6	0	1	0	0	No
7	0	1	0	0	No
8	0	1	0	0	No
9	0	1	0	0	No
10	0	1	0	0	No
11	0	1	0	0	No
12	0	1	0	0	No
13	0	1	0	0	No
14	0	1	0	0	No
15	0	1	0	0	No
16	0	1	0	0	No

Vehicle Detector Diagnostics (MM) 6-5

Veh Diagnostic Plan Number - 1

Det	Counts	Act	Pres	Multiplier	Failed Time	Failed Call Delay

Veh Diagnostic Plan Number - 2

Det	Counts	Act	Pres	Multiplier	Failed Time	Failed Call Delay

Veh Diagnostic Plan Number - 3

Det	Counts	Act	Pres	Multiplier	Failed Time	Failed Call Delay

Veh Diagnostic Plan Number - 4

Det	Counts	Act	Pres	Multiplier	Failed Time	Failed Call Delay

Pedestrian Detector Diagnostics (MM) 6-6

Ped Diagnostic Plan Number - 1

Det	Counts	Act	Pres	Multiplier

Ped Diagnostic Plan Number - 2

Det	Counts	Act	Pres	Multiplier

Ped Diagnostic Plan Number - 3

Det	Counts	Act	Pres	Multiplier

Ped Diagnostic Plan Number - 4

Det	Counts	Act	Pres	Multiplier

```
ÉÍÍÍÍÍÍÍÍÍÍÍÍÍÍÍÍÍÍÍÍÍÍÍÍÍÍÍÍÍÍÍÍÍÍÍÍÍÍÍÍÍÍ»
º*****************************************º
º*   ECONOLITE CONTROL PRODUCTS, INC.    *º
º*            ASC/2-2000                 *º
º*          Copyright (C) 1992           *º
º*                                       *º
º* City of Ontario, Traffic Engineering  *º
º*  ASC/2-2100  Configuration Ver. 1.1   *º
º*                                       *º
º*   SOFTWARE ASSY              VERSION   *º
º*   BOOT            32783        1.28   *º
º*   MAIN PROGRAM    34556        1.77   *º
º*   HELP            32789        1.62   *º
º*   CONFIGURATION   32791 (32K) C8145   *º
º*                                       *º
º*                                       *º
º*****************************************º
ÈÍÍÍÍÍÍÍÍÍÍÍÍÍÍÍÍÍÍÍÍÍÍÍÍÍÍÍÍÍÍÍÍÍÍÍÍÍÍÍÍÍÍ¼

ÉÍÍÍÍÍÍÍÍÍÍÍÍÍÍÍÍÍÍÍÍÍÍÍÍÍÍÍÍÍÍÍÍÍÍÍÍÍÍÍÍÍÍ»
º           CONTROLLER SEQUENCE           º
º                                         º
º    ------------ PRIORITY ------------    º
º                                1  1  1    º
º    1..2..3..4..5..6..7..8..9..0..1..2    º
ºR1  1  2| 3  4| 9 10| 0  0  0  0  0  0    º
ºR2  5  6| 7  8|11 12| 0  0  0  0  0  0    º
ºCG   .  ^  .  ^  .  ^  .  .  .  .  .  .    º
º                                         º
º                                         º
ºR1,R2 = RING 1 AND 2 PHASE ASSIGNMENT.   º
º                                         º
ºCG    = BARRIER LOCATION BETWEEN         º
º        CONCURRENT PHASE TIMING GROUPS.  º
º                                         º
ºEND OF SUBMENU                           º
ÈÍÍÍÍÍÍÍÍÍÍÍÍÍÍÍÍÍÍÍÍÍÍÍÍÍÍÍÍÍÍÍÍÍÍÍÍÍÍÍÍÍÍ¼

ÉÍÍÍÍÍÍÍÍÍÍÍÍÍÍÍÍÍÍÍÍÍÍÍÍÍÍÍÍÍÍÍÍÍÍÍÍÍÍÍÍÍÍ»
º              PHASES IN USE              º
º                                         º
º                  ----- PHASE NUMBER ----º
º                                  1 1 1º
º                  1 2 3 4 5 6 7 8 9 0 1 2º
ºPHASES IN USE     . X X X . . . X . . . .º
ºEXCLUSIVE PED     . . . . . . . . . . . .º
º                                         º
º                                         º
º                                         º
º                                         º
º                                         º
º                                         º
º                                         º
º                                         º
º                                         º
ºEND OF SUBMENU                           º
ÈÍÍÍÍÍÍÍÍÍÍÍÍÍÍÍÍÍÍÍÍÍÍÍÍÍÍÍÍÍÍÍÍÍÍÍÍÍÍÍÍÍÍ¼

ÉÍÍÍÍÍÍÍÍÍÍÍÍÍÍÍÍÍÍÍÍÍÍÍÍÍÍÍÍÍÍÍÍÍÍÍÍÍÍÍÍÍÍ»
ºPHASE TO LOAD SWITCH (MMU) ASSIGNMENT    º
º                                         º
ºLOAD       SIGNAL    LOAD       SIGNAL   º
ºSWITCH     DRIVER    SWITCH     DRIVER   º
```

```
º(MMU)      GROUP     (MMU)      GROUP   º
ºCHANNEL PH/OLAP PED  CHANNEL PH/OLAP PEDº
º   1       0     .     9       0     . º
º   2       2     .    10       0     . º
º   3       3     .    11       0     . º
º   4       4     .    12       0     . º
º   5       0     .    13       0     . º
º   6       0     .    14       0     . º
º   7       0     .    15       0     . º
º   8       8     .    16       0     . º
ºENTER 13-16 FOR OVERLAPS A-D            º
ºEND OF SUBMENU                          º
ÈÍÍÍÍÍÍÍÍÍÍÍÍÍÍÍÍÍÍÍÍÍÍÍÍÍÍÍÍÍÍÍÍÍÍÍÍÍÍ¼

ÉÍÍÍÍÍÍÍÍÍÍÍÍÍÍÍÍÍÍÍÍÍÍÍÍÍÍÍÍÍÍÍÍÍÍÍÍÍÍ»
º          SDLC OPTIONS/ENABLES          º
º                                        º
º                 ----- BIU NUMBER ----- º
º                 1..2..3..4..5..6..7..8 º
ºTERM & FACIL...  X  .  .  .  .  .  .  . º
ºDETECTOR RACK..  X  .  .  .  .  .  .  . º
º                                        º
ºTYPE 2 RUNS AS TYPE 1................ X º
ºMMU DISABLE.......................... . º
ºDIAGNOSTIC ENABLE (TEST FIXTURE)..... . º
ºPEER TO PEER ENABLE.................. . º
º                                        º
ºPEER TO PEER ADDRESSES:                 º
º1) 255  2) 255  3) 255  4) 255   5) 255 º
º6) 255  7) 255  8) 255  9) 255  10) 255 º
ºEND OF SUBMENU                          º
ÈÍÍÍÍÍÍÍÍÍÍÍÍÍÍÍÍÍÍÍÍÍÍÍÍÍÍÍÍÍÍÍÍÍÍÍÍÍÍ¼

ÉÍÍÍÍÍÍÍÍÍÍÍÍÍÍÍÍÍÍÍÍÍÍÍÍÍÍÍÍÍÍÍÍÍÍÍÍÍÍ»
º         PORT2 CONFIGURATION            º
º                                        º
ºPORT2 PROTOCOL.................  TERMNL  º
ºPORT2 ENABLE..................     YES  º
º                                        º
ºDATA RATE (BPS)...............   38.4k  º
ºDATA, PARITY, STOP............ 8, N, 1  º
º                                        º
ºAB3418 ADDRESS.................       0  º
ºAB3418 GROUP ADDRESS..........        0  º
ºAB3418 RESPONSE DELAY.........        0  º
ºAB3418 SINGLE FLAG ENABLE.....       NO  º
ºAB3418 DROP-OUT TIME..........        0  º
ºAB3418 TOD SF SELECT..........        0  º
º                                        º
ºADDITIONAL SCREEN(S)                    º
ÈÍÍÍÍÍÍÍÍÍÍÍÍÍÍÍÍÍÍÍÍÍÍÍÍÍÍÍÍÍÍÍÍÍÍÍÍÍÍ¼

ÉÍÍÍÍÍÍÍÍÍÍÍÍÍÍÍÍÍÍÍÍÍÍÍÍÍÍÍÍÍÍÍÍÍÍÍÍÍÍ»
º         PORT2 CONFIGURATION            º
º                                        º
ºAB3418 RTS TIMING.............       NO  º
ºAB3418 RTS TO CTS DELAY.......        0  º
ºAB3418 RTS TURN-OFF DELAY.....        0  º
ºAB3418 EARLY RTS..............       NO  º
º                                        º
º                                        º
º                                        º
º                                        º
```

```
º                                                  º
º                                                  º
º                                                  º
º                                                  º
º                                                  º
ºEND OF SUBMENU                                    º
ÈÍÍÍÍÍÍÍÍÍÍÍÍÍÍÍÍÍÍÍÍÍÍÍÍÍÍÍÍÍÍÍÍÍÍÍÍÍÍÍÍÍÍ¼

ÉÍÍÍÍÍÍÍÍÍÍÍÍÍÍÍÍÍÍÍÍÍÍÍÍÍÍÍÍÍÍÍÍÍÍÍÍÍÍÍÍÍÍ»
º          PORT3 CONFIGURATION                     º
º                                                  º
ºPORT3 PROTOCOL.................    TELEM          º
ºPORT3 ENABLE...................      YES          º
ºPORT3 MILLISEC TIMING..........       NO          º
ºPORT3 RTS TO CTS DELAY.........        0          º
ºPORT3 RTS TURN-OFF DELAY.......        0          º
º                                                  º
ºDUPLEX -- HALF or FULL.........     FULL          º
ºMODEM DATA RATE (BPS)..........     1200          º
ºDATA, PARITY, STOP.............  8, O, 1          º
º                                                  º
ºTELEMETRY ADDRESS..............        4          º
ºSYSTEM DETECTOR 9-16 ADDRESS...        0          º
ºTELEMETRY RESPONSE DELAY.......     8000          º
ºADDITIONAL SCREEN(S)                              º
ÈÍÍÍÍÍÍÍÍÍÍÍÍÍÍÍÍÍÍÍÍÍÍÍÍÍÍÍÍÍÍÍÍÍÍÍÍÍÍÍÍÍÍ¼

ÉÍÍÍÍÍÍÍÍÍÍÍÍÍÍÍÍÍÍÍÍÍÍÍÍÍÍÍÍÍÍÍÍÍÍÍÍÍÍÍÍÍÍ»
º          PORT3 CONFIGURATION                     º
º                                                  º
ºAB3418 ADDRESS.................        0          º
ºAB3418 GROUP ADDRESS...........        0          º
ºAB3418 RESPONSE DELAY..........        0          º
ºAB3418 SINGLE FLAG ENABLE......       NO          º
ºAB3418 DROP-OUT TIME...........        0          º
ºAB3418 TOD SF SELECT...........        0          º
ºAB3418 EARLY RTS...............       NO          º
º                                                  º
º            RICOCHET OPTION                       º
ºRICOCHET ADDRESS...............        0          º
ºAUTO STATUS DESTINATION ADDR...        0          º
ºAUTO STATUS REPORT DELAY.......        0          º
ºicons LIVE TIME................        0          º
ºEND OF SUBMENU                                    º
ÈÍÍÍÍÍÍÍÍÍÍÍÍÍÍÍÍÍÍÍÍÍÍÍÍÍÍÍÍÍÍÍÍÍÍÍÍÍÍÍÍÍÍ¼

ÉÍÍÍÍÍÍÍÍÍÍÍÍÍÍÍÍÍÍÍÍÍÍÍÍÍÍÍÍÍÍÍÍÍÍÍÍÍÍÍÍÍÍ»
º            ENABLE EVENT LOGS                     º
º                                                  º
ºCRITICAL RFE'S (MMU/TF) . . . . . .   X º
ºNON-CRITICAL RFE'S (DET/TEST) . . .   X º
ºDETECTOR ERRORS . . . . . .   X º
ºCOORDINATION ERRORS . . . . . .   X º
ºMMU FLASH FAULTS  . . . . . .   X º
ºLOCAL FLASH FAULTS  . . . . . .   X º
ºPREEMPT . . . . . .   X º
ºPOWER ON/OFF  . . . . . .   X º
ºLOW BATTERY . . . . . .   X º
ºSPARE . . . . . .   X º
ºALARM 1 . . . . . .   X º
ºALARM 2 . . . . . .   X º
ºALARM 3 . . . . . .   X º
ºADDITIONAL SCREEN(S)                              º
```

```
ÈÍÍÍÍÍÍÍÍÍÍÍÍÍÍÍÍÍÍÍÍÍÍÍÍÍÍÍÍÍÍÍÍÍÍÍÍÍÍÍÍÍÍÍÍÍ¼

ÉÍÍÍÍÍÍÍÍÍÍÍÍÍÍÍÍÍÍÍÍÍÍÍÍÍÍÍÍÍÍÍÍÍÍÍÍÍÍÍÍÍÍÍÍÍ»
º            ENABLE EVENT LOGS                        º
º                                                     º
ºALARM 4 . . . . . .   .                              º
ºALARM 5 . . . . . .   .                              º
ºALARM 6 . . . . . .   .                              º
ºALARM 7 . . . . . .   .                              º
ºALARM 8 . . . . . .   .                              º
ºALARM 9 . . . . . .   .                              º
ºALARM 10  . . . . . .   .                            º
ºALARM 11  . . . . . .   .                            º
ºALARM 12  . . . . . .   .                            º
ºALARM 13  . . . . . .   .                            º
ºALARM 14  . . . . . .   .                            º
ºALARM 15  . . . . . .   .                            º
ºALARM 16  . . . . . .   .                            º
ºEND OF SUBMENU                                       º
ÈÍÍÍÍÍÍÍÍÍÍÍÍÍÍÍÍÍÍÍÍÍÍÍÍÍÍÍÍÍÍÍÍÍÍÍÍÍÍÍÍÍÍÍÍÍ¼

ÉÍÍÍÍÍÍÍÍÍÍÍÍÍÍÍÍÍÍÍÍÍÍÍÍÍÍÍÍÍÍÍÍÍÍÍÍÍÍÍÍÍÍÍÍÍ»
º                  OPTIONS                            º
º                                                     º
º                                                     º
º                                                     º
ºSUPERVISOR ACCESS CODE...... 0000                    º
º                                                     º
ºDATA CHANGE ACCESS CODE..... 0000                    º
º                                                     º
ºKEY CLICK ENABLE.............  YES                    º
º                                                     º
ºBACKLIGHT ENABLE.............  YES                    º
º                                                     º
º                                                     º
º                                                     º
º                                                     º
ºEND OF SUBMENU                                       º
ÈÍÍÍÍÍÍÍÍÍÍÍÍÍÍÍÍÍÍÍÍÍÍÍÍÍÍÍÍÍÍÍÍÍÍÍÍÍÍÍÍÍÍÍÍÍ¼

♀

ÉÍÍÍÍÍÍÍÍÍÍÍÍÍÍÍÍÍÍÍÍÍÍÍÍÍÍÍÍÍÍÍÍÍÍÍÍÍÍÍÍÍÍÍÍÍ»
º                MMU PROGRAM                          º
ºCAN SERVE WITH:                                      º
º            1 1 1 1 1 1 1                            º
ºCHANNEL     6 5 4 3 2 1 0 9 8 7 6 5 4 3 2º
º  1         . . . . . .                              º
º  2         . . . . . .                              º
º  3         . . . . . .                              º
º  4         . . . . . .                              º
º  5         . . . . . .                              º
º  6         . . . . . .                              º
º  7         . . . . . .                              º
º  8         . . . . . .                              º
º  9         . . . . . .                              º
º 10         . . . . . .                              º
º 11         . . . . . .                              º
ºADDITIONAL SCREEN(S)                                 º
ÈÍÍÍÍÍÍÍÍÍÍÍÍÍÍÍÍÍÍÍÍÍÍÍÍÍÍÍÍÍÍÍÍÍÍÍÍÍÍÍÍÍÍÍÍÍ¼

ÉÍÍÍÍÍÍÍÍÍÍÍÍÍÍÍÍÍÍÍÍÍÍÍÍÍÍÍÍÍÍÍÍÍÍÍÍÍÍÍÍÍÍÍÍÍ»
º                MMU PROGRAM                          º
ºCAN SERVE WITH:                                      º
º            1 1 1 1 1 1 1                            º
```

```
ºCHANNEL    6 5 4 3 2 1 0 9 8 7 6 5 4 3 2º
º 12        . . . .                     º
º 13        . . .                       º
º 14        . .                         º
º 15        .                           º
º                                       º
º                                       º
º                                       º
º                                       º
º                                       º
º                                       º
º                                       º
º                                       º
ºEND OF SUBMENU                         º
ÈÍÍÍÍÍÍÍÍÍÍÍÍÍÍÍÍÍÍÍÍÍÍÍÍÍÍÍÍÍÍÍÍÍÍÍÍÍÍ¼

ÉÍÍÍÍÍÍÍÍÍÍÍÍÍÍÍÍÍÍÍÍÍÍÍÍÍÍÍÍÍÍÍÍÍÍÍÍÍÍ»
º*****************************************º
º*   ECONOLITE CONTROL PRODUCTS, INC.    *º
º*             ASC/2-2000                *º
º*          Copyright (C) 1992           *º
º*                                       *º
º* City of Ontario, Traffic Engineering *º
º*  ASC/2-2100  Configuration Ver. 1.1   *º
º*                                       *º
º*   SOFTWARE ASSY              VERSION   *º
º*   BOOT            32783        1.28   *º
º*   MAIN PROGRAM    34556        1.77   *º
º*   HELP            32789        1.62   *º
º*   CONFIGURATION   32791 (32K) C8145   *º
º*                                       *º
º*                                       *º
º*****************************************º
ÈÍÍÍÍÍÍÍÍÍÍÍÍÍÍÍÍÍÍÍÍÍÍÍÍÍÍÍÍÍÍÍÍÍÍÍÍÍÍ¼

ÉÍÍÍÍÍÍÍÍÍÍÍÍÍÍÍÍÍÍÍÍÍÍÍÍÍÍÍÍÍÍÍÍÍÍÍÍÍÍ»
º          CONTROLLER TIMING DATA           º
ºPHASE...   1...2...3...4...5...6...7...8º
ºMIN GRN.   0   7   6   6   0   0   0   6º
ºBIKE GRN   0   0   0   0   0   0   0   0º
ºCS MGRN.   0   0   0   0   0   0   0   0º
ºWALK....   0   0   0   0   0   0   0   0º
ºPED CLR.   0   7   0   7   0   7   0   7º
ºVEH EXT. 0.0 2.5 2.5 3.5 0.0 0.0 0.0 3.5º
ºVEH EXT2 0.0 0.0 0.0 0.0 0.0 0.0 0.0 0.0º
ºMAX EXT.   0  20  15  35   0   0   0  35º
ºMAX1....   0  20  15  35   0   0   0  35º
ºMAX2....   0  20  15  35   0   0   0  35º
ºMAX3....   0   0   0   0   0   0   0   0º
º                                         º
ºADDITIONAL SCREEN(S)              MORE->º
ÈÍÍÍÍÍÍÍÍÍÍÍÍÍÍÍÍÍÍÍÍÍÍÍÍÍÍÍÍÍÍÍÍÍÍÍÍÍÍ¼

ÉÍÍÍÍÍÍÍÍÍÍÍÍÍÍÍÍÍÍÍÍÍÍÍÍÍÍÍÍÍÍÍÍÍÍÍÍÍÍ»
º          CONTROLLER TIMING DATA           º
ºPHASE...   1...2...3...4...5...6...7...8º
ºYELLOW.. 3.0 4.0 5.0 5.0 3.0 3.0 3.0 5.0º
ºRED CLR. 0.0 2.0 2.0 2.0 0.0 0.0 0.0 2.0º
ºRED RVT. 0.0 5.0 5.0 5.0 0.0 0.0 0.0 5.0º
º                                         º
ºACT B4..   0   0   0   0   0   0   0   0º
ºSEC/ACT. 0.0 0.0 0.0 0.0 0.0 0.0 0.0 0.0º
ºMAX INI.   0   0   0   0   0   0   0   0º
```

```
ºTIME B4.   0  15   0  20   0   0   0  20º
ºCARS WT.   0   0   0   0   0   0   0   0º
ºTTREDUC.   0  15   0  15   0   0   0  15º
ºMIN GAP. 0.0 0.0 0.0 0.0 0.0 0.0 0.0 0.0º
º                                         º
º                                         º
ºEND OF SUBMENU                    MORE->º
ÈÍÍÍÍÍÍÍÍÍÍÍÍÍÍÍÍÍÍÍÍÍÍÍÍÍÍÍÍÍÍÍÍÍÍÍÍÍÍ¼

ÉÍÍÍÍÍÍÍÍÍÍÍÍÍÍÍÍÍÍÍÍÍÍÍÍÍÍÍÍÍÍÍÍÍÍÍÍÍÍ»
º         CONTROLLER TIMING DATA          º
ºPHASE...   9..10..11..12                 º
ºMIN GRN.   0   0   0   0                 º
ºBIKE GRN   0   0   0   0                 º
ºCS MGRN.   0   0   0   0                 º
ºWALK....   0   0   0   0                 º
ºPED CLR.   0   7   0   7                 º
ºVEH EXT. 0.0 0.0 0.0 0.0                 º
ºVEH EXT2 0.0 0.0 0.0 0.0                 º
ºMAX EXT.   0   0   0   0                 º
ºMAX1....   0   0   0   0                 º
ºMAX2....   0   0   0   0                 º
ºMAX3....   0   0   0   0                 º
ºDET MAX.   0   0   0   0                 º
º                                         º
ºADDITIONAL SCREEN(S)            <-MORE   º
ÈÍÍÍÍÍÍÍÍÍÍÍÍÍÍÍÍÍÍÍÍÍÍÍÍÍÍÍÍÍÍÍÍÍÍÍÍÍÍ¼

ÉÍÍÍÍÍÍÍÍÍÍÍÍÍÍÍÍÍÍÍÍÍÍÍÍÍÍÍÍÍÍÍÍÍÍÍÍÍÍ»
º         CONTROLLER TIMING DATA          º
ºPHASE...   9..10..11..12                 º
ºYELLOW.. 3.0 3.0 3.0 3.0                 º
ºRED CLR. 0.0 0.0 0.0 0.0                 º
ºRED RVT. 0.0 0.0 0.0 0.0                 º
º                                         º
ºACT B4..   0   0   0   0                 º
ºSEC/ACT. 0.0 0.0 0.0 0.0                 º
ºMAX INI.   0   0   0   0                 º
ºTIME B4.   0   0   0   0                 º
ºCARS WT.   0   0   0   0                 º
ºTTREDUC.   0   0   0   0                 º
ºMIN GAP. 0.0 0.0 0.0 0.0                 º
º                                         º
º                                         º
ºEND OF SUBMENU                  <-MORE   º
ÈÍÍÍÍÍÍÍÍÍÍÍÍÍÍÍÍÍÍÍÍÍÍÍÍÍÍÍÍÍÍÍÍÍÍÍÍÍÍ¼

ÉÍÍÍÍÍÍÍÍÍÍÍÍÍÍÍÍÍÍÍÍÍÍÍÍÍÍÍÍÍÍÍÍÍÍÍÍÍÍ»
º        PHASE OVERLAP ASSIGNMENTS        º
ºOVERLAP CONSISTS OF PHASES:        1 1 1º
ºOVLP PHASE       1 2 3 4 5 6 7 8 9 0 1 2º
º     1           X . . . . . . . . . . .º
º     2           . X . . . . . . . . . .º
º     3           . . X . . . . . . . . .º
º     4           . . . X . . . . . . . .º
º     5           . . . . X . . . . . . .º
º     6           . . . . . X . . . . . .º
º     7           . . . . . . X . . . . .º
º     8           . . . . . . . X . . . .º
º     9           . . . . . . . . X . . .º
º    10           . . . . . . . . . X . .º
º    11           . . . . . . . . . . X .º
º    12           . . . . . . . . . . . Xº
```

```
ºEND OF SUBMENU                                  º
ÈÍÍÍÍÍÍÍÍÍÍÍÍÍÍÍÍÍÍÍÍÍÍÍÍÍÍÍÍÍÍÍÍÍÍÍÍÍÍÍÍÍÍ¼

♀

ÉÍÍÍÍÍÍÍÍÍÍÍÍÍÍÍÍÍÍÍÍÍÍÍÍÍÍÍÍÍÍÍÍÍÍÍÍÍÍÍÍ»
º          PED TIMING CARRYOVER                  º
º                                                 º
º        PHASE      CARRYOVER PHASE               º
º          1              0                       º
º          2              0                       º
º          3              0                       º
º          4              0                       º
º          5              0                       º
º          6              0                       º
º          7              0                       º
º          8              0                       º
º          9              0                       º
º         10              0                       º
º         11              0                       º
º         12              0                       º
ºEND OF SUBMENU                                  º
ÈÍÍÍÍÍÍÍÍÍÍÍÍÍÍÍÍÍÍÍÍÍÍÍÍÍÍÍÍÍÍÍÍÍÍÍÍÍÍÍÍÍÍ¼

ÉÍÍÍÍÍÍÍÍÍÍÍÍÍÍÍÍÍÍÍÍÍÍÍÍÍÍÍÍÍÍÍÍÍÍÍÍÍÍÍÍ»
º         CONTROLLER RECALL DATA                  º
º                                                 º
ºPHASE:                                 1 1 1º
ºPHASE.....  1 2 3 4 5 6 7 8 9 0 1 2º
ºLOCKING MEMORY.  . . . . . .º
ºVEHICLE RECALL.  . . . X . . . X . . . .º
ºPED RECALL.....  . . . . . .º
ºRECALL TO MAX..  . . . . . .º
ºSOFT RECALL....  . . . . . .º
ºDON'T REST HERE  . . . . . .º
ºPED DARK N/CALL  . . . . . .º
º                                                 º
º                                                 º
º                                                 º
º                                                 º
ºEND OF SUBMENU                                  º
ÈÍÍÍÍÍÍÍÍÍÍÍÍÍÍÍÍÍÍÍÍÍÍÍÍÍÍÍÍÍÍÍÍÍÍÍÍÍÍÍÍÍÍ¼

ÉÍÍÍÍÍÍÍÍÍÍÍÍÍÍÍÍÍÍÍÍÍÍÍÍÍÍÍÍÍÍÍÍÍÍÍÍÍÍÍÍ»
º         CONTROLLER OVERLAP DATA                 º
º                                                 º
º                                       1 1 1º
ºOVERLAP A.....   1 2 3 4 5 6 7 8 9 0 1 2º
ºSTANDARD......   . . . . . .º
ºPROTECTED.....   . . . . . .º
ºPERMITTED.....   . . . . . .º
ºENABLE LAG....   . . . . . .º
ºENABLE LEAD...   . . . . . .º
ºSPARE.........   . . . . . .º
º                                                 º
º     ADVANCE GREEN TIMER      0.0                º
º     LAG/LEAD GREEN TIMER     0.0                º
º     LAG/LEAD YELLOW TIMER    0.0                º
º     LAG/LEAD RED TIMER       0.0                º
ºADDITIONAL PAGE(S)                              º
ÈÍÍÍÍÍÍÍÍÍÍÍÍÍÍÍÍÍÍÍÍÍÍÍÍÍÍÍÍÍÍÍÍÍÍÍÍÍÍÍÍÍÍ¼

♀

ÉÍÍÍÍÍÍÍÍÍÍÍÍÍÍÍÍÍÍÍÍÍÍÍÍÍÍÍÍÍÍÍÍÍÍÍÍÍÍÍÍ»
º         CONTROLLER OVERLAP DATA                 º
º                                                 º
```

```
º                                    1 1 1º
ºOVERLAP B.....   1 2 3 4 5 6 7 8 9 0 1 2º
ºSTANDARD......   . . . . . . . . . . . .º
ºPROTECTED.....   . . . . . . . . . . . .º
ºPERMITTED.....   . . . . . . . . . . . .º
ºENABLE LAG....   . . . . . . . . . . . .º
ºENABLE LEAD...   . . . . . . . . . . . .º
ºSPARE.........   . . . . . . . . . . . .º
º                                         º
º     ADVANCE GREEN TIMER      0.0        º
º     LAG/LEAD GREEN TIMER     0.0        º
º     LAG/LEAD YELLOW TIMER    0.0        º
º     LAG/LEAD RED TIMER       0.0        º
ºADDITIONAL PAGE(S)                       º
ÈÍÍÍÍÍÍÍÍÍÍÍÍÍÍÍÍÍÍÍÍÍÍÍÍÍÍÍÍÍÍÍÍÍÍÍÍÍÍÍÍÍ¼

ÉÍÍÍÍÍÍÍÍÍÍÍÍÍÍÍÍÍÍÍÍÍÍÍÍÍÍÍÍÍÍÍÍÍÍÍÍÍÍÍÍÍ»
º         CONTROLLER OVERLAP DATA         º
º                                         º
º                                    1 1 1º
ºOVERLAP C.....   1 2 3 4 5 6 7 8 9 0 1 2º
ºSTANDARD......   . . . . . . . . . . . .º
ºPROTECTED.....   . . . . . . . . . . . .º
ºPERMITTED.....   . . . . . . . . . . . .º
ºENABLE LAG....   . . . . . . . . . . . .º
ºENABLE LEAD...   . . . . . . . . . . . .º
ºSPARE.........   . . . . . . . . . . . .º
º                                         º
º     ADVANCE GREEN TIMER      0.0        º
º     LAG/LEAD GREEN TIMER     0.0        º
º     LAG/LEAD YELLOW TIMER    0.0        º
º     LAG/LEAD RED TIMER       0.0        º
ºADDITIONAL PAGE(S)                       º
ÈÍÍÍÍÍÍÍÍÍÍÍÍÍÍÍÍÍÍÍÍÍÍÍÍÍÍÍÍÍÍÍÍÍÍÍÍÍÍÍÍÍ¼

ÉÍÍÍÍÍÍÍÍÍÍÍÍÍÍÍÍÍÍÍÍÍÍÍÍÍÍÍÍÍÍÍÍÍÍÍÍÍÍÍÍÍ»
º         CONTROLLER OVERLAP DATA         º
º                                         º
º                                    1 1 1º
ºOVERLAP D.....   1 2 3 4 5 6 7 8 9 0 1 2º
ºSTANDARD......   . . . . . . . . . . . .º
ºPROTECTED.....   . . . . . . . . . . . .º
ºPERMITTED.....   . . . . . . . . . . . .º
ºENABLE LAG....   . . . . . . . . . . . .º
ºENABLE LEAD...   . . . . . . . . . . . .º
ºSPARE.........   . . . . . . . . . . . .º
º                                         º
º     ADVANCE GREEN TIMER      0.0        º
º     LAG/LEAD GREEN TIMER     0.0        º
º     LAG/LEAD YELLOW TIMER    0.0        º
º     LAG/LEAD RED TIMER       0.0        º
ºADDITIONAL PAGE(S)                       º
ÈÍÍÍÍÍÍÍÍÍÍÍÍÍÍÍÍÍÍÍÍÍÍÍÍÍÍÍÍÍÍÍÍÍÍÍÍÍÍÍÍÍ¼

ÉÍÍÍÍÍÍÍÍÍÍÍÍÍÍÍÍÍÍÍÍÍÍÍÍÍÍÍÍÍÍÍÍÍÍÍÍÍÍÍÍÍ»
º        PED OVERLAP ASSIGNMENTS          º
ºOVERLAP CONSISTS OF PHASES:         1 1 1º
ºOVLP PHASE       1 2 3 4 5 6 7 8 9 0 1 2º
º     1           . . . . . . . . . . . .º
º     2           . . . . . . . . . . . .º
º     3           . . . . . . . . . . . .º
º     4           . . . . . . . . . . . .º
º     5           . . . . . . . . . . . .º
```

```
º     6           . . . . . . . . . . . .º
º     7           . . . . . . . . . . . .º
º     8           . . . . . . . . . . . .º
º     9           . . . . . . . . . . . .º
º    10           . . . . . . . . . . . .º
º    11           . . . . . . . . . . . .º
º    12           . . . . . . . . . . . .º
ºEND OF SUBMENU                          º
ÈÍÍÍÍÍÍÍÍÍÍÍÍÍÍÍÍÍÍÍÍÍÍÍÍÍÍÍÍÍÍÍÍÍÍÍÍÍÍ¼

ÉÍÍÍÍÍÍÍÍÍÍÍÍÍÍÍÍÍÍÍÍÍÍÍÍÍÍÍÍÍÍÍÍÍÍÍÍÍÍ»
º       CONTROLLER START/FLASH DATA      º
º                                  1 1 1 º
ºPHASE.....  1 2 3 4 5 6 7 8 9 0 1 2 º
ºPOWER START....  . X . . . . . . . . . .º
ºEXTERNAL START.  . X . . . . . . . . . .º
ºENTRY REM FLASH  . . . X . . . X . . . .º
ºEXIT REM FLASH.  . X . . . . . . . . . .º
ºREM FLASH YEL..  . . . . . . . . . . . .º
ºFL TOGETHER PHS  . X . X . . . X . . . .º
ºFL TOGETHER OVLPS A: .  B: .  C: .  D: .º
º                                        º
ºPOWER START.............   YELLOW     º
ºEXTERNAL START..........   YELLOW     º
ºPOWER START ALL RED TIME..   0 SECONDS  º
ºPOWER START FLASH TIME....   0 SECONDS  º
ºADDITIONAL PAGE(S)                      º
ÈÍÍÍÍÍÍÍÍÍÍÍÍÍÍÍÍÍÍÍÍÍÍÍÍÍÍÍÍÍÍÍÍÍÍÍÍÍÍ¼

ÉÍÍÍÍÍÍÍÍÍÍÍÍÍÍÍÍÍÍÍÍÍÍÍÍÍÍÍÍÍÍÍÍÍÍÍÍÍÍ»
º       CONTROLLER START/FLASH DATA      º
º                                        º
ºREMOTE FLASH OPTIONS:                   º
º                                        º
ºOUT OF FLASH YELLOW..... X              º
ºOUT OF FLASH ALL RED..... .             º
ºMINIMUM RECALL.......... .              º
ºSPARE................... .              º
ºFLASH THRU LOAD SWITCHES.... .          º
ºCYCLE THROUGH PHASES..... .             º
º                                        º
º                                        º
º                                        º
º                                        º
º                                        º
ºEND OF SUBMENU                          º
ÈÍÍÍÍÍÍÍÍÍÍÍÍÍÍÍÍÍÍÍÍÍÍÍÍÍÍÍÍÍÍÍÍÍÍÍÍÍÍ¼

ÉÍÍÍÍÍÍÍÍÍÍÍÍÍÍÍÍÍÍÍÍÍÍÍÍÍÍÍÍÍÍÍÍÍÍÍÍÍÍ»
º           NO SERVE PHASES              º
ºCANNOT SERVE WITH: 1 1 1                º
ºPHASE              2 1 0 9 8 7 6 5 4 3 2º
º  1                . . . . . . . . . . .º
º  2                . . . . . . . . . .  º
º  3                . . . . . . . . .    º
º  4                . . . . . . . .      º
º  5                . . . . . . .        º
º  6                . . . . . .          º
º  7                . . . . .            º
º  8                . . . .              º
º  9                . . .                º
º 10                . .                  º
º 11                .                    º
```

```
º                                                  º
ºEND OF SUBMENU                                    º
ÈÍÍÍÍÍÍÍÍÍÍÍÍÍÍÍÍÍÍÍÍÍÍÍÍÍÍÍÍÍÍÍÍÍÍÍÍÍÍÍÍÍÍÍÍ¼

ÉÍÍÍÍÍÍÍÍÍÍÍÍÍÍÍÍÍÍÍÍÍÍÍÍÍÍÍÍÍÍÍÍÍÍÍÍÍÍÍÍÍÍ»
º                  DIMMING                         º
º                                                  º
ºLOAD SWITCH....  1..2..3..4..5..6..7..8 º
ºDIM GRN/WLK....  .  .  .  .  .  .  .  . º
ºDIM YEL/PC.....  .  .  .  .  .  .  .  . º
ºDIM RED/DW.....  .  .  .  .  .  .  .  . º
º                                                  º
ºLOAD SWITCH....  9.10.11.12.13.14.15.16 º
ºDIM GRN/WLK....  .  .  .  .  .  .  .  . º
ºDIM YEL/PC.....  .  .  .  .  .  .  .  . º
ºDIM RED/DW.....  .  .  .  .  .  .  .  . º
º                                                  º
º                                                  º
º                                                  º
º                                                  º
ºEND OF SUBMENU                                    º
ÈÍÍÍÍÍÍÍÍÍÍÍÍÍÍÍÍÍÍÍÍÍÍÍÍÍÍÍÍÍÍÍÍÍÍÍÍÍÍÍÍÍÍÍÍ¼

ÉÍÍÍÍÍÍÍÍÍÍÍÍÍÍÍÍÍÍÍÍÍÍÍÍÍÍÍÍÍÍÍÍÍÍÍÍÍÍÍÍÍÍ»
º          CONTROLLER OPTION DATA                  º
º                                          1 1 1º
ºPHASE.........  1 2 3 4 5 6 7 8 9 0 1 2º
ºGUAR PASSAGE...  . . . . . . . . . . . . º
ºNONACTUATED I..  . X . . . . . . . . . . º
ºNONACTUATED II.  . . . X . . . X . . . . º
ºDUAL ENTRY.....  . . . . . . . . . . . . º
ºCOND SERVICE...  . . . . . . . . . . . . º
ºCOND RESERVICE.  . . . . . . . . . . . . º
ºREST IN WALK...  . . . . . . . . . . . . º
ºFLASHING WALK..  . . . . . . . . . . . . º
º                                                  º
º----- FIVE SECTION LEFT TURN HEADS -----º
º   5-2 :  .     7-4 :  .     1-6 :  .   º
º   3-8 :  .    11-10:  .    9-12 :  .   º
ºADDITIONAL PAGE(S)                                º
ÈÍÍÍÍÍÍÍÍÍÍÍÍÍÍÍÍÍÍÍÍÍÍÍÍÍÍÍÍÍÍÍÍÍÍÍÍÍÍÍÍÍÍÍÍ¼
♀
ÉÍÍÍÍÍÍÍÍÍÍÍÍÍÍÍÍÍÍÍÍÍÍÍÍÍÍÍÍÍÍÍÍÍÍÍÍÍÍÍÍÍÍ»
º          CONTROLLER OPTION DATA                  º
ºDUAL ENTRY..................... OFF    º
ºCOND SERVICE ENABLE............ OFF    º
ºCOND SERVICE DET X SWITCHING.... OFF    º
ºPED CLR PROTECT................ OFF    º
ºSPEC PREEMPT OVLP FLASH........ OFF    º
ºLOCK DETECTORS IN RED ONLY..... OFF    º
ºRESERVED....................... OFF    º
ºRESERVED....................... OFF    º
ºBACKUP PROTECTION GROUP 1...... OFF    º
ºBACKUP PROTECTION GROUP 2...... OFF    º
ºBACKUP PROTECTION GROUP 3...... OFF    º
ºSIMULTANEOUS GAP GROUP 1....... OFF    º
ºSIMULTANEOUS GAP GROUP 2....... OFF    º
ºSIMULTANEOUS GAP GROUP 3....... OFF    º
ºEND OF SUBMENU                                    º
ÈÍÍÍÍÍÍÍÍÍÍÍÍÍÍÍÍÍÍÍÍÍÍÍÍÍÍÍÍÍÍÍÍÍÍÍÍÍÍÍÍÍÍÍÍ¼
♀
ÉÍÍÍÍÍÍÍÍÍÍÍÍÍÍÍÍÍÍÍÍÍÍÍÍÍÍÍÍÍÍÍÍÍÍÍÍÍÍÍÍÍÍ»
º****************************************º
```

```
º*   ECONOLITE CONTROL PRODUCTS, INC.   *º
º*             ASC/2-2000               *º
º*          Copyright (C) 1992          *º
º*                                      *º
º* City of Ontario, Traffic Engineering *º
º*  ASC/2-2100  Configuration Ver. 1.1  *º
º*                                      *º
º*   SOFTWARE ASSY              VERSION  *º
º*   BOOT            32783        1.28  *º
º*   MAIN PROGRAM    34556        1.77  *º
º*   HELP            32789        1.62  *º
º*   CONFIGURATION   32791 (32K) C8145  *º
º*                                      *º
º*                                      *º
º****************************************º
ÈÍÍÍÍÍÍÍÍÍÍÍÍÍÍÍÍÍÍÍÍÍÍÍÍÍÍÍÍÍÍÍÍÍÍÍÍÍÍ¼

ÉÍÍÍÍÍÍÍÍÍÍÍÍÍÍÍÍÍÍÍÍÍÍÍÍÍÍÍÍÍÍÍÍÍÍÍÍÍÍ»
º          COORDINATOR OPTIONS           º
º                                        º
ºSPLIT UNITS..     %    ACT CRD PHASE..  .º
ºOFFSET UNITS.     %    ACT WALK/REST..  .º
ºINTERCNT FMT.   STD    INHIBIT MAX....  .º
ºINTERCNT SRC.   NIC    MAX2 SELECT....  .º
ºRESYNC COUNT.     0    MULTISYNC......  .º
ºTRANSITION...   SMOOTH FLOAT FORCE OFF  .º
ºDWELL PERIOD.     0%                    º
º                                        º
º                                        º
º                            A B C D E F º
ºFREE ALTERNATE SEQUENCE     . . . . . . º
º                                        º
º                                        º
ºEND OF SUBMENU                          º
ÈÍÍÍÍÍÍÍÍÍÍÍÍÍÍÍÍÍÍÍÍÍÍÍÍÍÍÍÍÍÍÍÍÍÍÍÍÍÍ¼

ÉÍÍÍÍÍÍÍÍÍÍÍÍÍÍÍÍÍÍÍÍÍÍÍÍÍÍÍÍÍÍÍÍÍÍÍÍÍÍ»
º      COORD MANUAL AND SPLIT DEMAND     º
º                                        º
ºMANUAL ENABLE:  ON    MANUAL PATTERN   0º
º                                        º
º----------------------------------------º
º                                        º
ºSPLIT DEMAND:       DEMAND 1  DEMAND 2  º
ºDEMAND CALL TIME        0s        0s    º
ºDEMAND CYCLE COUNT      0         0     º
º                                        º
º                                  1 1 1º
ºDEMAND PHASE:    1 2 3 4 5 6 7 8 9 0 1 2º
ºDEMAND 1 PHASES  . . . . . . . . . . . .º
ºDEMAND 2 PHASES  . . . . . . . . . . . .º
º                                        º
ºEND OF SUBMENU                          º
ÈÍÍÍÍÍÍÍÍÍÍÍÍÍÍÍÍÍÍÍÍÍÍÍÍÍÍÍÍÍÍÍÍÍÍÍÍÍÍ¼

ÉÍÍÍÍÍÍÍÍÍÍÍÍÍÍÍÍÍÍÍÍÍÍÍÍÍÍÍÍÍÍÍÍÍÍÍÍÍÍ»
º        COORD AUTO PERM MIN GREEN       º
º                                        º
º        PHASE   AUTO PERM MIN GRN       º
º          1              0s             º
º          2              0s             º
º          3              0s             º
º          4              0s             º
```

```
º          5              0s             º
º          6              0s             º
º          7              0s             º
º          8              0s             º
º          9              0s             º
º         10              0s             º
º         11              0s             º
º         12              0s             º
ºEND OF SUBMENU                          º
ÈÍÍÍÍÍÍÍÍÍÍÍÍÍÍÍÍÍÍÍÍÍÍÍÍÍÍÍÍÍÍÍÍÍÍÍÍÍÍÍÍÍÍ¼

ÉÍÍÍÍÍÍÍÍÍÍÍÍÍÍÍÍÍÍÍÍÍÍÍÍÍÍÍÍÍÍÍÍÍÍÍÍÍÍÍÍÍÍ»
ºCOORD PATTERN 31                        º
º                                        º
ºCYCLE LENGTH..... 100s  C/O/S.....  411 º
ºOFFSET...........  26%                  º
ºSPLITS:                                 º
ºPHASE  1)  0%   2) 35%   3) 25%   4) 40%º
ºPHASE  5)  0%   6)  0%   7)  0%   8) 65%º
ºPHASE  9)  0%  10)  0%  11)  0%  12)  0%º
º                                        º
ºVEH PERMISSIVE.......  [1]   0% [2]   0%º
ºVEH PERM 2 DISP.....    0%              º
ºPHASE RESERVICE.....    .               º
ºSPLIT EXTENSION/RING.  [1]   0% [2]   0%º
ºSPL DMD PATTERN......  [1]   0  [2]   0 º
ºXARTERY PATTERN.....    0               º
ºADDITIONAL SCREEN(S)                    º
ÈÍÍÍÍÍÍÍÍÍÍÍÍÍÍÍÍÍÍÍÍÍÍÍÍÍÍÍÍÍÍÍÍÍÍÍÍÍÍÍÍÍÍ¼

ÉÍÍÍÍÍÍÍÍÍÍÍÍÍÍÍÍÍÍÍÍÍÍÍÍÍÍÍÍÍÍÍÍÍÍÍÍÍÍÍÍÍÍ»
º                              1 1 1     º
ºPHASE            1 2 3 4 5 6 7 8 9 0 1 2º
ºCOORD PHASES     . . . X . . . X . . . .º
ºVEHICLE RECALL   . . . . . . . . . . . .º
ºVEH MAX RECALL   . . . . . . . . . . . .º
ºPED RECALL       . . . . . . . . . . . .º
ºPHASE OMIT       . . . . . . . . . . . .º
ºSPARE            . . . . . . . . . . . .º
º                                        º
º                 A B C D E F            º
ºALT SEQUENCE:    . X . . . .            º
º                                        º
º                                        º
º                                        º
º                                        º
ºADDITIONAL SCREEN(S)                    º
ÈÍÍÍÍÍÍÍÍÍÍÍÍÍÍÍÍÍÍÍÍÍÍÍÍÍÍÍÍÍÍÍÍÍÍÍÍÍÍÍÍÍÍ¼

ÉÍÍÍÍÍÍÍÍÍÍÍÍÍÍÍÍÍÍÍÍÍÍÍÍÍÍÍÍÍÍÍÍÍÍÍÍÍÍÍÍÍÍ»
ºCOORD PATTERN 33                        º
º                                        º
ºCYCLE LENGTH..... 100s  C/O/S.....  611 º
ºOFFSET...........  36%                  º
ºSPLITS:                                 º
ºPHASE  1)  0%   2) 22%   3) 27%   4) 51%º
ºPHASE  5)  0%   6)  0%   7)  0%   8) 78%º
ºPHASE  9)  0%  10)  0%  11)  0%  12)  0%º
º                                        º
ºVEH PERMISSIVE.......  [1]   0% [2]   0%º
ºVEH PERM 2 DISP.....    0%              º
ºPHASE RESERVICE.....    .               º
ºSPLIT EXTENSION/RING.  [1]   0% [2]   0%º
```

```
ºSPL DMD PATTERN......  [1]   0  [2]   0 º
ºXARTERY PATTERN.....   0          º
ºADDITIONAL SCREEN(S)              º
ÈÍÍÍÍÍÍÍÍÍÍÍÍÍÍÍÍÍÍÍÍÍÍÍÍÍÍÍÍÍÍÍÍÍÍÍÍÍÍ¼

ÉÍÍÍÍÍÍÍÍÍÍÍÍÍÍÍÍÍÍÍÍÍÍÍÍÍÍÍÍÍÍÍÍÍÍÍÍÍÍ»
º                                  1 1 1º
ºPHASE            1 2 3 4 5 6 7 8 9 0 1 2º
ºCOORD PHASES     . . . X . . . X . . . .º
ºVEHICLE RECALL   . . . . . . . . . . . .º
ºVEH MAX RECALL   . . . . . . . . . . . .º
ºPED RECALL       . . . . . . . . . . . .º
ºPHASE OMIT       . . . . . . . . . . . .º
ºSPARE            . . . . . . . . . . . .º
º                                        º
º                 A B C D E F            º
ºALT SEQUENCE:    . X . . . .            º
º                                        º
º                                        º
º                                        º
º                                        º
ºADDITIONAL SCREEN(S)                    º
ÈÍÍÍÍÍÍÍÍÍÍÍÍÍÍÍÍÍÍÍÍÍÍÍÍÍÍÍÍÍÍÍÍÍÍÍÍÍÍ¼

ÉÍÍÍÍÍÍÍÍÍÍÍÍÍÍÍÍÍÍÍÍÍÍÍÍÍÍÍÍÍÍÍÍÍÍÍÍÍÍ»
ºCOORD PATTERN 51                        º
º                                        º
ºCYCLE LENGTH..... 100s  C/O/S.....  411 º
ºOFFSET...........  26%                  º
ºSPLITS:                                 º
ºPHASE  1)  0%   2) 35%   3) 25%   4) 40%º
ºPHASE  5)  0%   6)  0%   7)  0%   8) 65%º
ºPHASE  9)  0%  10)  0%  11)  0%  12)  0%º
º                                        º
ºVEH PERMISSIVE.......  [1]   0% [2]   0%º
ºVEH PERM 2 DISP......... 0%             º
ºPHASE RESERVICE.........  .             º
ºSPLIT EXTENSION/RING.  [1]   0% [2]   0%º
ºSPL DMD PATTERN......  [1]   0  [2]   0 º
ºXARTERY PATTERN.....   0          º
ºADDITIONAL SCREEN(S)              º
ÈÍÍÍÍÍÍÍÍÍÍÍÍÍÍÍÍÍÍÍÍÍÍÍÍÍÍÍÍÍÍÍÍÍÍÍÍÍÍ¼

ÉÍÍÍÍÍÍÍÍÍÍÍÍÍÍÍÍÍÍÍÍÍÍÍÍÍÍÍÍÍÍÍÍÍÍÍÍÍÍ»
º                                  1 1 1º
ºPHASE            1 2 3 4 5 6 7 8 9 0 1 2º
ºCOORD PHASES     . . . X . . . X . . . .º
ºVEHICLE RECALL   . . . . . . . . . . . .º
ºVEH MAX RECALL   . . . . . . . . . . . .º
ºPED RECALL       . . . . . . . . . . . .º
ºPHASE OMIT       . . . . . . . . . . . .º
ºSPARE            . . . . . . . . . . . .º
º                                        º
º                 A B C D E F            º
ºALT SEQUENCE:    . . . . . .            º
º                                        º
º                                        º
º                                        º
º                                        º
ºADDITIONAL SCREEN(S)                    º
ÈÍÍÍÍÍÍÍÍÍÍÍÍÍÍÍÍÍÍÍÍÍÍÍÍÍÍÍÍÍÍÍÍÍÍÍÍÍÍ¼

ÉÍÍÍÍÍÍÍÍÍÍÍÍÍÍÍÍÍÍÍÍÍÍÍÍÍÍÍÍÍÍÍÍÍÍÍÍÍÍ»
```

```
ºCOORD PATTERN 53                                 º
º                                                 º
ºCYCLE LENGTH..... 100s  C/O/S.....  611 º
ºOFFSET.....  14%                                 º
ºSPLITS:                                          º
ºPHASE  1)  0%   2) 22%   3) 27%   4) 51%º
ºPHASE  5)  0%   6)  0%   7)  0%   8) 78%º
ºPHASE  9)  0%  10)  0%  11)  0%  12)  0%º
º                                                 º
ºVEH PERMISSIVE.......  [1]   0% [2]   0%º
ºVEH PERM 2 DISP.....   0%                       º
ºPHASE RESERVICE.....   .                        º
ºSPLIT EXTENSION/RING.  [1]   0% [2]   0%º
ºSPL DMD PATTERN......  [1]   0  [2]   0 º
ºXARTERY PATTERN.....   0                        º
ºADDITIONAL SCREEN(S)                             º
ÈÍÍÍÍÍÍÍÍÍÍÍÍÍÍÍÍÍÍÍÍÍÍÍÍÍÍÍÍÍÍÍÍÍÍÍÍÍÍÍÍÍÍ¼

ÉÍÍÍÍÍÍÍÍÍÍÍÍÍÍÍÍÍÍÍÍÍÍÍÍÍÍÍÍÍÍÍÍÍÍÍÍÍÍÍÍÍÍ»
º                                    1 1 1º
ºPHASE            1 2 3 4 5 6 7 8 9 0 1 2º
ºCOORD PHASES     . . . X . . . X . . . .º
ºVEHICLE RECALL   . . . . . . . . . . . .º
ºVEH MAX RECALL   . . . . . . . . . . . .º
ºPED RECALL       . . . . . . . . . . . .º
ºPHASE OMIT       . . . . . . . . . . . .º
ºSPARE            . . . . . . . . . . . .º
º                                         º
º                 A B C D E F             º
ºALT SEQUENCE:    . X . . . .             º
º                                         º
º                                         º
º                                         º
º                                         º
ºADDITIONAL SCREEN(S)                     º
ÈÍÍÍÍÍÍÍÍÍÍÍÍÍÍÍÍÍÍÍÍÍÍÍÍÍÍÍÍÍÍÍÍÍÍÍÍÍÍÍÍÍÍ¼

ÉÍÍÍÍÍÍÍÍÍÍÍÍÍÍÍÍÍÍÍÍÍÍÍÍÍÍÍÍÍÍÍÍÍÍÍÍÍÍÍÍÍÍ»
º*****************************************º
º*   ECONOLITE CONTROL PRODUCTS, INC.    *º
º*            ASC/2-2000                 *º
º*          Copyright (C) 1992           *º
º*                                       *º
º* City of Ontario, Traffic Engineering *º
º*  ASC/2-2100  Configuration Ver. 1.1   *º
º*                                       *º
º*   SOFTWARE ASSY            VERSION    *º
º*   BOOT           32783        1.28    *º
º*   MAIN PROGRAM   34556        1.77    *º
º*   HELP           32789        1.62    *º
º*   CONFIGURATION  32791 (32K) C8145    *º
º*                                       *º
º*                                       *º
º*****************************************º
ÈÍÍÍÍÍÍÍÍÍÍÍÍÍÍÍÍÍÍÍÍÍÍÍÍÍÍÍÍÍÍÍÍÍÍÍÍÍÍÍÍÍÍ¼

ÉÍÍÍÍÍÍÍÍÍÍÍÍÍÍÍÍÍÍÍÍÍÍÍÍÍÍÍÍÍÍÍÍÍÍÍÍÍÍÍÍÍÍ»
ºPRIORITY PREEMPTOR 1                1 1 1º
ºPHASE.....  1 2 3 4 5 6 7 8 9 0 1 2º
ºTERM PHASE OVLP  . . . . . . . . . . . .º
ºTRK CLR PHASE..  . . . . . . . . . . . .º
ºHOLD PHASES....  . . . X . . . . . . . .º
ºEXIT PHASES....  . . . . . . . . . . . .º
```

```
ºEXIT CALLS.....  . . . . . .º
ºSPARE..........  . . . . . .º
ºTERM OVERLAP...   A: .  B: .  C: .  D: .º
º                                         º
ºACTIVE.........YES  PED DARK....... NO   º
ºPRIORITY....... NO  PED ACTIVE..... NO   º
ºDET LOCK....... NO  ZERO PC TIME... NO   º
ºHOLD FLASH..... NO  PC THRU YELLOW. NO   º
ºTERM OVLP ASAP. NO  TERM PHASES.... NO   º
ºADDITIONAL PAGE(S)                       º
ÈÍÍÍÍÍÍÍÍÍÍÍÍÍÍÍÍÍÍÍÍÍÍÍÍÍÍÍÍÍÍÍÍÍÍÍÍÍÍÍÍÍÍ¼

ÉÍÍÍÍÍÍÍÍÍÍÍÍÍÍÍÍÍÍÍÍÍÍÍÍÍÍÍÍÍÍÍÍÍÍÍÍÍÍÍÍÍÍ»
º          PRIORITY PREEMPTOR 1           º
º                                         º
ºDON'T OVERRIDE FLASH.....  X             º
ºFLASH ALL OUTPUTS........  .             º
ºYELLOW-RED GOES GREEN....  .             º
ºENABLE MAX PREEMPT TIME..  X             º
ºACTIVE ONLY DURING HOLD..  .             º
ºNO CVM IN FLASH..........  .             º
ºFAST FLASH GRN ON HOLD...  X             º
ºOUT OF FLASH.............  GREEN         º
º                                         º
º                                         º
º                                         º
º                                         º
º                                         º
ºADDITIONAL PAGE(S)                       º
ÈÍÍÍÍÍÍÍÍÍÍÍÍÍÍÍÍÍÍÍÍÍÍÍÍÍÍÍÍÍÍÍÍÍÍÍÍÍÍÍÍÍÍ¼

ÉÍÍÍÍÍÍÍÍÍÍÍÍÍÍÍÍÍÍÍÍÍÍÍÍÍÍÍÍÍÍÍÍÍÍÍÍÍÍÍÍÍÍ»
º          PRIORITY PREEMPTOR 1           º
º                                         º
ºMAX TIME..... 45  DURATION TIME..  0     º
ºMIN HOLD TIME.  0  DELAY TIME.....  0     º
ºMIN PED CLEAR.  0  INHIBIT TIME...  0     º
ºEXIT MAX......  0  HLD DELAY TIME.  0     º
º                                         º
º                GRN  YEL  RED            º
ºMINIMUM.......    0  0.0  0.0            º
ºTRACK CLEAR...    0  0.0  0.0            º
ºHOLD..........       0.0  0.0            º
º                                         º
º                                         º
º                                         º
º                                         º
ºEND OF SUBMENU                           º
ÈÍÍÍÍÍÍÍÍÍÍÍÍÍÍÍÍÍÍÍÍÍÍÍÍÍÍÍÍÍÍÍÍÍÍÍÍÍÍÍÍÍÍ¼

ÉÍÍÍÍÍÍÍÍÍÍÍÍÍÍÍÍÍÍÍÍÍÍÍÍÍÍÍÍÍÍÍÍÍÍÍÍÍÍÍÍÍÍ»
ºPRIORITY PREEMPTOR 2              1 1 1º
ºPHASE.........  1 2 3 4 5 6 7 8 9 0 1 2º
ºTERM PHASE OVLP  . . . . . .º
ºTRK CLR PHASE..  . . . . . .º
ºHOLD PHASES....  . . X . . . X . . . .º
ºEXIT PHASES....  . . . . . .º
ºEXIT CALLS.....  . . . . . .º
ºSPARE..........  . . . . . .º
ºTERM OVERLAP...   A: .  B: .  C: .  D: .º
º                                         º
ºACTIVE.........YES  PED DARK....... NO   º
ºPRIORITY....... NO  PED ACTIVE..... NO   º
```

```
ºDET LOCK....... NO  ZERO PC TIME... NO  º
ºHOLD FLASH..... NO  PC THRU YELLOW. NO  º
ºTERM OVLP ASAP. NO  TERM PHASES.... NO  º
ºADDITIONAL PAGE(S)                      º
ÈÍÍÍÍÍÍÍÍÍÍÍÍÍÍÍÍÍÍÍÍÍÍÍÍÍÍÍÍÍÍÍÍÍÍÍÍÍ¼

ÉÍÍÍÍÍÍÍÍÍÍÍÍÍÍÍÍÍÍÍÍÍÍÍÍÍÍÍÍÍÍÍÍÍÍÍÍÍ»
º          PRIORITY PREEMPTOR 2          º
º                                        º
ºDON'T OVERRIDE FLASH.....  X            º
ºFLASH ALL OUTPUTS........  .            º
ºYELLOW-RED GOES GREEN....  .            º
ºENABLE MAX PREEMPT TIME..  X            º
ºACTIVE ONLY DURING HOLD..  .            º
ºNO CVM IN FLASH..........  .            º
ºFAST FLASH GRN ON HOLD...  X            º
ºOUT OF FLASH.............  GREEN        º
º                                        º
º                                        º
º                                        º
º                                        º
º                                        º
ºADDITIONAL PAGE(S)                      º
ÈÍÍÍÍÍÍÍÍÍÍÍÍÍÍÍÍÍÍÍÍÍÍÍÍÍÍÍÍÍÍÍÍÍÍÍÍÍ¼

ÉÍÍÍÍÍÍÍÍÍÍÍÍÍÍÍÍÍÍÍÍÍÍÍÍÍÍÍÍÍÍÍÍÍÍÍÍÍ»
º          PRIORITY PREEMPTOR 2          º
º                                        º
ºMAX TIME..... 45  DURATION TIME..  0    º
ºMIN HOLD TIME.  0  DELAY TIME.....  0    º
ºMIN PED CLEAR.  0  INHIBIT TIME...  0    º
ºEXIT MAX.....   0  HLD DELAY TIME.  0    º
º                                        º
º                GRN  YEL  RED           º
ºMINIMUM.......    0  0.0  0.0           º
ºTRACK CLEAR...    0  0.0  0.0           º
ºHOLD..........       0.0  0.0           º
º                                        º
ºLINKED PREEMPTOR.....  0                º
º                                        º
º                                        º
ºEND OF SUBMENU                          º
ÈÍÍÍÍÍÍÍÍÍÍÍÍÍÍÍÍÍÍÍÍÍÍÍÍÍÍÍÍÍÍÍÍÍÍÍÍÍ¼

ÉÍÍÍÍÍÍÍÍÍÍÍÍÍÍÍÍÍÍÍÍÍÍÍÍÍÍÍÍÍÍÍÍÍÍÍÍÍ»
ºPRIORITY PREEMPTOR 3              1 1 1º
ºPHASE.........  1 2 3 4 5 6 7 8 9 0 1 2º
ºTERM PHASE OVLP  . . . . . . . . . . . .º
ºTRK CLR PHASE..  . . . . . . . . . . . .º
ºHOLD PHASES....  . . . X . . . . . . . .º
ºEXIT PHASES....  . . . . . . . . . . . .º
ºEXIT CALLS.....  . . . . . . . . . . . .º
ºSPARE..........  . . . . . . . . . . . .º
ºTERM OVERLAP...   A: .  B: .  C: .  D: .º
º                                        º
ºACTIVE.........YES  PED DARK....... NO  º
ºPRIORITY....... NO  PED ACTIVE..... NO  º
ºDET LOCK....... NO  ZERO PC TIME... NO  º
ºHOLD FLASH..... NO  PC THRU YELLOW. NO  º
ºTERM OVLP ASAP. NO  TERM PHASES.... NO  º
ºADDITIONAL PAGE(S)                      º
ÈÍÍÍÍÍÍÍÍÍÍÍÍÍÍÍÍÍÍÍÍÍÍÍÍÍÍÍÍÍÍÍÍÍÍÍÍÍ¼
```

```
É͸͸͸͸͸͸͸͸͸͸͸͸͸͸͸͸͸͸͸͸͸͸͸͸͸͸͸͸͸͸͸͸͸͸͸͸͸»
º          PRIORITY PREEMPTOR 3          º
º                                        º
ºDON'T OVERRIDE FLASH.....  X            º
ºFLASH ALL OUTPUTS........  .            º
ºYELLOW-RED GOES GREEN....  .            º
ºENABLE MAX PREEMPT TIME..  X            º
ºACTIVE ONLY DURING HOLD..  .            º
ºNO CVM IN FLASH..........  .            º
ºFAST FLASH GRN ON HOLD...  .            º
ºOUT OF FLASH.............  GREEN        º
º                                        º
º                                        º
º                                        º
º                                        º
º                                        º
ºADDITIONAL PAGE(S)                      º
È͸͸͸͸͸͸͸͸͸͸͸͸͸͸͸͸͸͸͸͸͸͸͸͸͸͸͸͸͸͸͸͸͸͸͸͸͸¼

♀

É͸͸͸͸͸͸͸͸͸͸͸͸͸͸͸͸͸͸͸͸͸͸͸͸͸͸͸͸͸͸͸͸͸͸͸͸͸»
º          PRIORITY PREEMPTOR 3          º
º                                        º
ºMAX TIME..... 90  DURATION TIME..  0    º
ºMIN HOLD TIME.  0  DELAY TIME.....  0   º
ºMIN PED CLEAR.  0  INHIBIT TIME...  0   º
ºEXIT MAX......  0  HLD DELAY TIME.  0   º
º                                        º
º                GRN  YEL  RED           º
ºMINIMUM.......    0  0.0  0.0           º
ºTRACK CLEAR...    0  0.0  0.0           º
ºHOLD..........       0.0  0.0           º
º                                        º
ºLINKED PREEMPTOR.....  0                º
º                                        º
º                                        º
ºEND OF SUBMENU                          º
È͸͸͸͸͸͸͸͸͸͸͸͸͸͸͸͸͸͸͸͸͸͸͸͸͸͸͸͸͸͸͸͸͸͸͸͸͸¼

É͸͸͸͸͸͸͸͸͸͸͸͸͸͸͸͸͸͸͸͸͸͸͸͸͸͸͸͸͸͸͸͸͸͸͸͸͸»
º          PRIORITY PREEMPTOR 4     1 1 1º
ºPHASE.........  1 2 3 4 5 6 7 8 9 0 1 2º
ºTERM PHASE OVLP  . . . . . . . . . . . .º
ºTRK CLR PHASE..  . . . . . . . . . . . .º
ºHOLD PHASES....  . . . X . . . . . . . .º
ºEXIT PHASES....  . . . . . . . . . . . .º
ºEXIT CALLS.....  . . . . . . . . . . . .º
ºSPARE.........  . . . . . . . . . . . .º
ºTERM OVERLAP...   A: .  B: .  C: .  D: .º
º                                        º
ºACTIVE.........YES  PED DARK....... NO  º
ºPRIORITY....... NO  PED ACTIVE..... NO  º
ºDET LOCK....... NO  ZERO PC TIME... NO  º
ºHOLD FLASH..... NO  PC THRU YELLOW. NO  º
ºTERM OVLP ASAP. NO  TERM PHASES.... NO  º
ºADDITIONAL PAGE(S)                      º
È͸͸͸͸͸͸͸͸͸͸͸͸͸͸͸͸͸͸͸͸͸͸͸͸͸͸͸͸͸͸͸͸͸͸͸͸͸¼

É͸͸͸͸͸͸͸͸͸͸͸͸͸͸͸͸͸͸͸͸͸͸͸͸͸͸͸͸͸͸͸͸͸͸͸͸͸»
º          PRIORITY PREEMPTOR 4          º
º                                        º
ºDON'T OVERRIDE FLASH.....  .            º
ºFLASH ALL OUTPUTS........  .            º
ºYELLOW-RED GOES GREEN....  .            º
```

```
ºENABLE MAX PREEMPT TIME..  .            º
ºACTIVE ONLY DURING HOLD..  .            º
ºNO CVM IN FLASH..........  .            º
ºFAST FLASH GRN ON HOLD...  .            º
ºOUT OF FLASH.............  GREEN        º
º                                        º
º                                        º
º                                        º
º                                        º
º                                        º
ºADDITIONAL PAGE(S)                      º
ÈÍÍÍÍÍÍÍÍÍÍÍÍÍÍÍÍÍÍÍÍÍÍÍÍÍÍÍÍÍÍÍÍÍÍÍÍÍÍ¼
```

♀

```
ÉÍÍÍÍÍÍÍÍÍÍÍÍÍÍÍÍÍÍÍÍÍÍÍÍÍÍÍÍÍÍÍÍÍÍÍÍÍÍ»
º          PRIORITY PREEMPTOR 4          º
º                                        º
ºMAX TIME......  0  DURATION TIME..  0    º
ºMIN HOLD TIME.  0  DELAY TIME.....  0    º
ºMIN PED CLEAR.  0  INHIBIT TIME...  0    º
ºEXIT MAX......  0  HLD DELAY TIME.  0    º
º                                        º
º                GRN  YEL  RED           º
ºMINIMUM.......    0  0.0  0.0           º
ºTRACK CLEAR...    0  0.0  0.0           º
ºHOLD..........       0.0  0.0           º
º                                        º
ºLINKED PREEMPTOR.....  0                º
º                                        º
º                                        º
ºEND OF SUBMENU                          º
ÈÍÍÍÍÍÍÍÍÍÍÍÍÍÍÍÍÍÍÍÍÍÍÍÍÍÍÍÍÍÍÍÍÍÍÍÍÍÍ¼

ÉÍÍÍÍÍÍÍÍÍÍÍÍÍÍÍÍÍÍÍÍÍÍÍÍÍÍÍÍÍÍÍÍÍÍÍÍÍÍ»
ºPRIORITY PREEMPTOR 5              1 1 1º
ºPHASE.........  1 2 3 4 5 6 7 8 9 0 1 2º
ºTERM PHASE OVLP  . . . . . . . . . . . .º
ºTRK CLR PHASE..  . . . . . . . . . . . .º
ºHOLD PHASES....  . . . . . . . . . . . .º
ºEXIT PHASES....  . . . . . . . . . . . .º
ºEXIT CALLS.....  . . . . . . . . . . . .º
ºSPARE..........  . . . . . . . . . . . .º
ºTERM OVERLAP...   A: .  B: .  C: .  D: .º
º                                        º
ºACTIVE.........YES  PED DARK....... NO  º
ºPRIORITY....... NO  PED ACTIVE..... NO  º
ºDET LOCK....... NO  ZERO PC TIME... NO  º
ºHOLD FLASH..... NO  PC THRU YELLOW. NO  º
ºTERM OVLP ASAP. NO  TERM PHASES.... NO  º
ºADDITIONAL PAGE(S)                      º
ÈÍÍÍÍÍÍÍÍÍÍÍÍÍÍÍÍÍÍÍÍÍÍÍÍÍÍÍÍÍÍÍÍÍÍÍÍÍÍ¼

ÉÍÍÍÍÍÍÍÍÍÍÍÍÍÍÍÍÍÍÍÍÍÍÍÍÍÍÍÍÍÍÍÍÍÍÍÍÍÍ»
º          PRIORITY PREEMPTOR 5          º
º                                        º
ºDON'T OVERRIDE FLASH.....  X            º
ºFLASH ALL OUTPUTS........  .            º
ºYELLOW-RED GOES GREEN....  .            º
ºENABLE MAX PREEMPT TIME..  X            º
ºACTIVE ONLY DURING HOLD..  .            º
ºNO CVM IN FLASH..........  .            º
ºFAST FLASH GRN ON HOLD...  .            º
ºOUT OF FLASH.............  GREEN        º
º                                        º
```

```
º                                          º
º                                          º
º                                          º
º                                          º
ºADDITIONAL PAGE(S)                        º
ÈÍÍÍÍÍÍÍÍÍÍÍÍÍÍÍÍÍÍÍÍÍÍÍÍÍÍÍÍÍÍÍÍÍÍÍÍÍ¼

ÉÍÍÍÍÍÍÍÍÍÍÍÍÍÍÍÍÍÍÍÍÍÍÍÍÍÍÍÍÍÍÍÍÍÍÍÍÍ»
º          PRIORITY PREEMPTOR 5            º
º                                          º
ºMAX TIME..... 45  DURATION TIME..  0      º
ºMIN HOLD TIME.  0  DELAY TIME.....  0      º
ºMIN PED CLEAR.  0  INHIBIT TIME...  0      º
ºEXIT MAX......  0  HLD DELAY TIME.  0      º
º                                          º
º                GRN  YEL  RED             º
ºMINIMUM.......    0  0.0  0.0             º
ºTRACK CLEAR...    0  0.0  0.0             º
ºHOLD.........        0.0  0.0             º
º                                          º
ºLINKED PREEMPTOR.....  0                  º
º                                          º
º                                          º
ºEND OF SUBMENU                            º
ÈÍÍÍÍÍÍÍÍÍÍÍÍÍÍÍÍÍÍÍÍÍÍÍÍÍÍÍÍÍÍÍÍÍÍÍÍÍ¼

ÉÍÍÍÍÍÍÍÍÍÍÍÍÍÍÍÍÍÍÍÍÍÍÍÍÍÍÍÍÍÍÍÍÍÍÍÍÍ»
ºPRIORITY PREEMPTOR 6              1 1 1º
ºPHASE.........  1 2 3 4 5 6 7 8 9 0 1 2º
ºTERM PHASE OVLP  . . . . . . . . . . . .º
ºTRK CLR PHASE..  . . . . . . . . . . . .º
ºHOLD PHASES....  . . . . . . . . . . . .º
ºEXIT PHASES....  . . . . . . . . . . . .º
ºEXIT CALLS.....  . . . . . . . . . . . .º
ºSPARE.........  . . . . . . . . . . . .º
ºTERM OVERLAP...   A: .  B: .  C: .  D: .º
º                                          º
ºACTIVE.........YES  PED DARK....... NO    º
ºPRIORITY....... NO  PED ACTIVE..... NO    º
ºDET LOCK....... NO  ZERO PC TIME... NO    º
ºHOLD FLASH..... NO  PC THRU YELLOW. NO    º
ºTERM OVLP ASAP. NO  TERM PHASES.... NO    º
ºADDITIONAL PAGE(S)                        º
ÈÍÍÍÍÍÍÍÍÍÍÍÍÍÍÍÍÍÍÍÍÍÍÍÍÍÍÍÍÍÍÍÍÍÍÍÍÍ¼

ÉÍÍÍÍÍÍÍÍÍÍÍÍÍÍÍÍÍÍÍÍÍÍÍÍÍÍÍÍÍÍÍÍÍÍÍÍÍ»
º          PRIORITY PREEMPTOR 6            º
º                                          º
ºDON'T OVERRIDE FLASH.....  X              º
ºFLASH ALL OUTPUTS........  .              º
ºYELLOW-RED GOES GREEN....  .              º
ºENABLE MAX PREEMPT TIME..  X              º
ºACTIVE ONLY DURING HOLD..  .              º
ºNO CVM IN FLASH..........  .              º
ºFAST FLASH GRN ON HOLD...  .              º
ºOUT OF FLASH.............  GREEN          º
º                                          º
º                                          º
º                                          º
º                                          º
º                                          º
ºADDITIONAL PAGE(S)                        º
ÈÍÍÍÍÍÍÍÍÍÍÍÍÍÍÍÍÍÍÍÍÍÍÍÍÍÍÍÍÍÍÍÍÍÍÍÍÍ¼
```

```
ÉÍÍÍÍÍÍÍÍÍÍÍÍÍÍÍÍÍÍÍÍÍÍÍÍÍÍÍÍÍÍÍÍÍÍÍÍÍÍÍÍÍÍ»
º          PRIORITY PREEMPTOR 6                    º
º                                                  º
ºMAX TIME...... 90  DURATION TIME..  0             º
ºMIN HOLD TIME.  0  DELAY TIME.....  0             º
ºMIN PED CLEAR.  0  INHIBIT TIME...  0             º
ºEXIT MAX......  0  HLD DELAY TIME.  0             º
º                                                  º
º                GRN  YEL  RED                     º
ºMINIMUM.......    0  0.0  0.0                     º
ºTRACK CLEAR...    0  0.0  0.0                     º
ºHOLD..........       0.0  0.0                     º
º                                                  º
ºLINKED PREEMPTOR.....  0                          º
º                                                  º
º                                                  º
ºEND OF SUBMENU                                    º
ÈÍÍÍÍÍÍÍÍÍÍÍÍÍÍÍÍÍÍÍÍÍÍÍÍÍÍÍÍÍÍÍÍÍÍÍÍÍÍÍÍÍÍ¼

ÉÍÍÍÍÍÍÍÍÍÍÍÍÍÍÍÍÍÍÍÍÍÍÍÍÍÍÍÍÍÍÍÍÍÍÍÍÍÍÍÍÍÍ»
º              BUS PREEMPTOR                       º
º                                                  º
º                    - BUS PREEMPTOR -             º
º                     1    2    3    4             º
ºPREEMPTOR ACTIVE.    .    .    .    .             º
ºDETECTOR LOCK....    .    .    .    .             º
ºMAXIMUM TIME.....    0    0    0    0             º
ºRESERVICE TIME...    0    0    0    0             º
ºDELAY TIME.......    0    0    0    0             º
ºINHIBIT TIME.....    0    0    0    0             º
ºENTRANCE GREEN...    0    0    0    0             º
ºENTRANCE PED CLR.    0    0    0    0             º
ºENTRANCE YELLOW..  0.0  0.0  0.0  0.0             º
ºENTRANCE RED.....  0.0  0.0  0.0  0.0             º
ºMIN HOLD TIME....    0    0    0    0             º
ºADDITIONAL PAGE(S)                                º
ÈÍÍÍÍÍÍÍÍÍÍÍÍÍÍÍÍÍÍÍÍÍÍÍÍÍÍÍÍÍÍÍÍÍÍÍÍÍÍÍÍÍÍ¼

ÉÍÍÍÍÍÍÍÍÍÍÍÍÍÍÍÍÍÍÍÍÍÍÍÍÍÍÍÍÍÍÍÍÍÍÍÍÍÍÍÍÍÍ»
º              BUS PREEMPTOR                       º
º                                                  º
º                 ------ HOLD PHASE -----          º
º                                       1 1 1      º
º                 1 2 3 4 5 6 7 8 9 0 1 2          º
ºPREEMPTOR 1....  . . . . . . . . . . . .          º
ºPREEMPTOR 2....  . . . . . . . . . . . .          º
ºPREEMPTOR 3....  . . . . . . . . . . . .          º
ºPREEMPTOR 4....  . . . . . . . . . . . .          º
º                                                  º
º                                                  º
º                                                  º
º                                                  º
º                                                  º
º                                                  º
ºEND OF SUBMENU                                    º
ÈÍÍÍÍÍÍÍÍÍÍÍÍÍÍÍÍÍÍÍÍÍÍÍÍÍÍÍÍÍÍÍÍÍÍÍÍÍÍÍÍÍÍ¼

ÉÍÍÍÍÍÍÍÍÍÍÍÍÍÍÍÍÍÍÍÍÍÍÍÍÍÍÍÍÍÍÍÍÍÍÍÍÍÍÍÍÍÍ»
º******************************************º
º*   ECONOLITE CONTROL PRODUCTS, INC.   *º
º*            ASC/2-2000                *º
º*          Copyright (C) 1992          *º
```

```
º*                                      *º
º* City of Ontario, Traffic Engineering *º
º*  ASC/2-2100  Configuration Ver. 1.1  *º
º*                                      *º
º*   SOFTWARE ASSY              VERSION  *º
º*   BOOT            32783        1.28  *º
º*   MAIN PROGRAM    34556        1.77  *º
º*   HELP            32789        1.62  *º
º*   CONFIGURATION   32791 (32K) C8145  *º
º*                                      *º
º*                                      *º
º**************************************º
ÈÍÍÍÍÍÍÍÍÍÍÍÍÍÍÍÍÍÍÍÍÍÍÍÍÍÍÍÍÍÍÍÍÍÍÍÍÍÍ¼

ÉÍÍÍÍÍÍÍÍÍÍÍÍÍÍÍÍÍÍÍÍÍÍÍÍÍÍÍÍÍÍÍÍÍÍÍÍÍÍ»
º       NIC/TOD CLOCK/CALENDAR DATA      º
º                                        º
º                                        º
ºDATE SET:  2/21/18  | ENTER DATE/TIME   º
ºTIME SET:  8:10:52  | THEN PRESS ENTER  º
º                                        º
ºMANUAL NIC PROGRAM STEP    0            º
ºMANUAL TOD PROGRAM STEP    0            º
º                                        º
ºSYNC REFERENCE TIME    0:00             º
ºSYNC REFERENCE.........REFERENCE TIME   º
º                                        º
ºWEEK 1 BEGINS ON 1ST SUNDAY  .          º
ºDISABLE DAYLIGHT SAVINGS     .          º
ºDST BEGINS LAST SUNDAY       .          º
ºEND OF SUBMENU                          º
ÈÍÍÍÍÍÍÍÍÍÍÍÍÍÍÍÍÍÍÍÍÍÍÍÍÍÍÍÍÍÍÍÍÍÍÍÍÍÍ¼

ÉÍÍÍÍÍÍÍÍÍÍÍÍÍÍÍÍÍÍÍÍÍÍÍÍÍÍÍÍÍÍÍÍÍÍÍÍÍÍ»
º         NIC/TOD WEEKLY PROGRAMS        º
ºWEEK   SUN   MON   TUE   WED   THU   FRI   SAT º
º  1     2     1     1     1     1     1     2  º
º  2     2     1     1     1     1     1     2  º
º  3     2     1     1     1     1     1     2  º
º  4     2     1     1     1     1     1     2  º
º  5     2     1     1     1     1     1     2  º
º  6     2     1     1     1     1     1     2  º
º  7     2     1     1     1     1     1     2  º
º  8     2     1     1     1     1     1     2  º
º  9     2     1     1     1     1     1     2  º
º 10     2     1     1     1     1     1     2  º
º                                        º
º                                        º
º                                        º
ºEND OF SUBMENU                          º
ÈÍÍÍÍÍÍÍÍÍÍÍÍÍÍÍÍÍÍÍÍÍÍÍÍÍÍÍÍÍÍÍÍÍÍÍÍÍÍ¼

ÉÍÍÍÍÍÍÍÍÍÍÍÍÍÍÍÍÍÍÍÍÍÍÍÍÍÍÍÍÍÍÍÍÍÍÍÍÍÍ»
º         NIC/TOD YEARLY PROGRAM         º
ºWEEK OF YEAR      1  2  3  4  5  6  7  8º
ºWEEKLY PROGRAM    1  1  1  1  1  1  1  1º
º                                        º
ºWEEK OF YEAR      9 10 11 12 13 14 15 16º
ºWEEKLY PROGRAM    1  1  1  1  1  1  1  1º
º                                        º
ºWEEK OF YEAR     17 18 19 20 21 22 23 24º
ºWEEKLY PROGRAM    1  1  1  1  1  1  1  1º
º                                        º
```

♀

```
ºWEEK OF YEAR     25 26 27 28 29 30 31 32º
ºWEEKLY PROGRAM    1  1  1  1  1  1  1  1º
º                                         º
ºWEEK OF YEAR     33 34 35 36 37 38 39 40º
ºWEEKLY PROGRAM    1  1  1  1  1  1  1  1º
ºADDITIONAL SCREEN(S)                     º
ÈÍÍÍÍÍÍÍÍÍÍÍÍÍÍÍÍÍÍÍÍÍÍÍÍÍÍÍÍÍÍÍÍÍÍÍÍÍ¼

ÉÍÍÍÍÍÍÍÍÍÍÍÍÍÍÍÍÍÍÍÍÍÍÍÍÍÍÍÍÍÍÍÍÍÍÍÍÍ»
º          NIC/TOD YEARLY PROGRAM         º
º                                         º
ºWEEK OF YEAR     41 42 43 44 45 46 47 48º
ºWEEKLY PROGRAM    1  1  1  1  1  1  1  1º
º                                         º
ºWEEK OF YEAR              49 50 51 52 53º
ºWEEKLY PROGRAM             1  1  1  1  1º
º                                         º
º                                         º
º                                         º
º                                         º
º                                         º
º                                         º
º                                         º
º                                         º
ºEND OF SUBMENU                           º
ÈÍÍÍÍÍÍÍÍÍÍÍÍÍÍÍÍÍÍÍÍÍÍÍÍÍÍÍÍÍÍÍÍÍÍÍÍÍ¼

ÉÍÍÍÍÍÍÍÍÍÍÍÍÍÍÍÍÍÍÍÍÍÍÍÍÍÍÍÍÍÍÍÍÍÍÍÍÍ»
º          NIC/TOD HOLIDAY PROGRAM        º
ºHOLIDAY   FLOAT/  MON/  DOW/  WOM/  PROG º
º          FIXED   MON   DOM   YEAR       º
º   1      FIXED     0     0      0    0  º
º   2      FIXED     0     0      0    0  º
º   3      FIXED     0     0      0    0  º
º   4      FIXED     0     0      0    0  º
º   5      FIXED     0     0      0    0  º
º   6      FIXED     0     0      0    0  º
º   7      FIXED     0     0      0    0  º
º   8      FIXED     0     0      0    0  º
º   9      FIXED     0     0      0    0  º
º  10      FIXED     0     0      0    0  º
º  11      FIXED     0     0      0    0  º
º  12      FIXED     0     0      0    0  º
ºADDITIONAL SCREEN(S)                     º
ÈÍÍÍÍÍÍÍÍÍÍÍÍÍÍÍÍÍÍÍÍÍÍÍÍÍÍÍÍÍÍÍÍÍÍÍÍÍ¼

ÉÍÍÍÍÍÍÍÍÍÍÍÍÍÍÍÍÍÍÍÍÍÍÍÍÍÍÍÍÍÍÍÍÍÍÍÍÍ»
º          NIC/TOD HOLIDAY PROGRAM        º
ºHOLIDAY   FLOAT/  MON/  DOW/  WOM/  PROG º
º          FIXED   MON   DOM   YEAR       º
º  13      FIXED     0     0      0    0  º
º  14      FIXED     0     0      0    0  º
º  15      FIXED     0     0      0    0  º
º  16      FIXED     0     0      0    0  º
º  17      FIXED     0     0      0    0  º
º  18      FIXED     0     0      0    0  º
º  19      FIXED     0     0      0    0  º
º  20      FIXED     0     0      0    0  º
º  21      FIXED     0     0      0    0  º
º  22      FIXED     0     0      0    0  º
º  23      FIXED     0     0      0    0  º
º  24      FIXED     0     0      0    0  º
ºADDITIONAL SCREEN(S)                     º
```

```
ÈÍÍÍ
```

```
º13   0     .     0.0     0    .       .  º
º14   0     .     0.0     0    .       .  º
º15   0     .     0.0     0    .       .  º
º16   0     .     0.0     0    .       .  º
º17   0     .     0.0     0    .       .  º
º18   0     .     0.0     0    .       .  º
º19   0     .     0.0     0    .       .  º
º20   0     .     0.0     0    .       .  º
º21   0     .     0.0     0    .       .  º
º22   0     .     0.0     0    .       .  º
º23   0     .     0.0     0    .       .  º
º24   0     .     0.0     0    .       .  º
ºADDITIONAL SCREEN(S)                     º
ÈÍÍÍÍÍÍÍÍÍÍÍÍÍÍÍÍÍÍÍÍÍÍÍÍÍÍÍÍÍÍÍÍÍÍÍÍÍÍÍÍÍ¼
♀

ÉÍÍÍÍÍÍÍÍÍÍÍÍÍÍÍÍÍÍÍÍÍÍÍÍÍÍÍÍÍÍÍÍÍÍÍÍÍÍÍÍÍ»
º          DETECTOR TYPE/TIMERS           º
º                                NO    LOG   º
ºDET TYPE LOCK  EXTEND DELAY RESET ENABLEº
º25   0     .     0.0     0    .       .  º
º26   0     .     0.0     0    .       .  º
º27   0     .     0.0     0    .       .  º
º28   0     .     0.0     0    .       .  º
º29   0     .     0.0     0    .       .  º
º30   0     .     0.0     0    .       .  º
º31   0     .     0.0     0    .       .  º
º32   0     .     0.0     0    .       .  º
º33   0     .     0.0     0    .       .  º
º34   0     .     0.0     0    .       .  º
º35   0     .     0.0     0    .       .  º
º36   0     .     0.0     0    .       .  º
ºADDITIONAL SCREEN(S)                     º
ÈÍÍÍÍÍÍÍÍÍÍÍÍÍÍÍÍÍÍÍÍÍÍÍÍÍÍÍÍÍÍÍÍÍÍÍÍÍÍÍÍÍ¼

ÉÍÍÍÍÍÍÍÍÍÍÍÍÍÍÍÍÍÍÍÍÍÍÍÍÍÍÍÍÍÍÍÍÍÍÍÍÍÍÍÍÍ»
º          DETECTOR TYPE/TIMERS           º
º                                NO    LOG   º
ºDET TYPE LOCK  EXTEND DELAY RESET ENABLEº
º37   0     .     0.0     0    .       .  º
º38   0     .     0.0     0    .       .  º
º39   0     .     0.0     0    .       .  º
º40   0     .     0.0     0    .       .  º
º41   0     .     0.0     0    .       .  º
º42   0     .     0.0     0    .       .  º
º43   0     .     0.0     0    .       .  º
º44   0     .     0.0     0    .       .  º
º45   0     .     0.0     0    .       .  º
º46   0     .     0.0     0    .       .  º
º47   0     .     0.0     0    .       .  º
º48   0     .     0.0     0    .       .  º
ºADDITIONAL SCREEN(S)                     º
ÈÍÍÍÍÍÍÍÍÍÍÍÍÍÍÍÍÍÍÍÍÍÍÍÍÍÍÍÍÍÍÍÍÍÍÍÍÍÍÍÍÍ¼

ÉÍÍÍÍÍÍÍÍÍÍÍÍÍÍÍÍÍÍÍÍÍÍÍÍÍÍÍÍÍÍÍÍÍÍÍÍÍÍÍÍÍ»
º          DETECTOR TYPE/TIMERS           º
º                                NO    LOG   º
ºDET TYPE LOCK  EXTEND DELAY RESET ENABLEº
º49   0     .     0.0     0    .       .  º
º50   0     .     0.0     0    .       .  º
º51   0     .     0.0     0    .       .  º
º52   0     .     0.0     0    .       .  º
º53   0     .     0.0     0    .       .  º
º54   0     .     0.0     0    .       .  º
```

```
º55   0     .     0.0     0    .      .  º
º56   0     .     0.0     0    .      .  º
º57   0     .     0.0     0    .      .  º
º58   0     .     0.0     0    .      .  º
º59   0     .     0.0     0    .      .  º
º60   0     .     0.0     0    .      .  º
ºADDITIONAL SCREEN(S)                    º
ÈÍÍÍÍÍÍÍÍÍÍÍÍÍÍÍÍÍÍÍÍÍÍÍÍÍÍÍÍÍÍÍÍÍÍÍÍÍÍ¼

ÉÍÍÍÍÍÍÍÍÍÍÍÍÍÍÍÍÍÍÍÍÍÍÍÍÍÍÍÍÍÍÍÍÍÍÍÍÍÍ»
º          DETECTOR TYPE/TIMERS          º
º                              NO    LOG   º
ºDET TYPE LOCK  EXTEND DELAY RESET ENABLEº
º53   0     .     0.0     0    .      .  º
º54   0     .     0.0     0    .      .  º
º55   0     .     0.0     0    .      .  º
º56   0     .     0.0     0    .      .  º
º57   0     .     0.0     0    .      .  º
º58   0     .     0.0     0    .      .  º
º59   0     .     0.0     0    .      .  º
º60   0     .     0.0     0    .      .  º
º61   0     .     0.0     0    .      .  º
º62   0     .     0.0     0    .      .  º
º63   0     .     0.0     0    .      .  º
º64   0     .     0.0     0    .      .  º
ºEND OF SUBMENU                          º
ÈÍÍÍÍÍÍÍÍÍÍÍÍÍÍÍÍÍÍÍÍÍÍÍÍÍÍÍÍÍÍÍÍÍÍÍÍÍÍ¼

ÉÍÍÍÍÍÍÍÍÍÍÍÍÍÍÍÍÍÍÍÍÍÍÍÍÍÍÍÍÍÍÍÍÍÍÍÍÍÍ»
º      DETECTOR PHASE ASSIGNMENT         º
º              PHASE ASSIGNMENT: 1 1 1   º
ºDETECTOR      1 2 3 4 5 6 7 8 9 0 1 2   º
º    1         . . . . . . . . . . . .   º
º    2         . X . . . . . . . . . .   º
º    3         . . X . . . . . . . . .   º
º    4         . . . X . . . . . . . .   º
º    5         . . . . . . . . . . . .   º
º    6         . . . . . . . . . . . .   º
º    7         . . . . . . . . . . . .   º
º    8         . . . . . . . X . . . .   º
º    9         . . . . . . . . . . . .   º
º   10         . . . . . . . . . . . .   º
º   11         . . . . . . . . . . . .   º
º   12         . . . X . . . . . . . .   º
ºADDITIONAL SCREEN(S)                    º
ÈÍÍÍÍÍÍÍÍÍÍÍÍÍÍÍÍÍÍÍÍÍÍÍÍÍÍÍÍÍÍÍÍÍÍÍÍÍÍ¼

ÉÍÍÍÍÍÍÍÍÍÍÍÍÍÍÍÍÍÍÍÍÍÍÍÍÍÍÍÍÍÍÍÍÍÍÍÍÍÍ»
º      DETECTOR PHASE ASSIGNMENT         º
º              PHASE ASSIGNMENT: 1 1 1   º
ºDETECTOR      1 2 3 4 5 6 7 8 9 0 1 2   º
º   13         . . . . . . . . . . . .   º
º   14         . . . . . . . . . . . .   º
º   15         . . . . . . . . . . . .   º
º   16         . . . . . . . X . . . .   º
º   17         . . . . . . . . . . . .   º
º   18         . . . . . . . . . . . .   º
º   19         . . . . . . . . . . . .   º
º   20         . . . . . . . . . . . .   º
º   21         . . . . . . . . . . . .   º
º   22         . . . . . . . . . . . .   º
º   23         . . . . . . . . . . . .   º
º   24         . . . . . . . . . . . .   º
```

```
ºADDITIONAL SCREEN(S)                                          º
ÈÍÍÍÍÍÍÍÍÍÍÍÍÍÍÍÍÍÍÍÍÍÍÍÍÍÍÍÍÍÍÍÍÍÍÍÍÍÍÍÍÍÍÍÍÍÍÍÍÍÍÍÍÍÍ¼

ÉÍÍÍÍÍÍÍÍÍÍÍÍÍÍÍÍÍÍÍÍÍÍÍÍÍÍÍÍÍÍÍÍÍÍÍÍÍÍÍÍÍÍÍÍÍÍÍÍÍÍÍÍÍÍ»
ºPED AND SYSTEM DETECTOR LOCAL ASSIGNMENTº
º                                                              º
ºDETECTOR LOG INTERVAL.........  0 MINUTESº
º--------------------------------------------------------------º
ºLOCAL          - PHASE PED DETECTOR -                         º
ºPED DET         1   2   3   4   5   6                         º
ºNUMBER..        1   2   3   4   5   6                         º
º                7   8   9  10  11  12                         º
ºNUMBER..        7   8   9  10  11  12                         º
º--------------------------------------------------------------º
ºLOCAL      -- LOCAL SYSTEM DET NUMBER ---                     º
ºDETECTOR   1   2   3   4   5   6   7   8º
ºNUMBER..   0   0   0   0   0   0   0   0º
º           9  10  11  12  13  14  15  16º
ºNUMBER..   0   0   0   0   0   0   0   0º
ºEND OF SUBMENU                                                º
ÈÍÍÍÍÍÍÍÍÍÍÍÍÍÍÍÍÍÍÍÍÍÍÍÍÍÍÍÍÍÍÍÍÍÍÍÍÍÍÍÍÍÍÍÍÍÍÍÍÍÍÍÍÍÍ¼

ÉÍÍÍÍÍÍÍÍÍÍÍÍÍÍÍÍÍÍÍÍÍÍÍÍÍÍÍÍÍÍÍÍÍÍÍÍÍÍÍÍÍÍÍÍÍÍÍÍÍÍÍÍÍÍ»
º            CROSS SWITCHING                                   º
º               PHASES:              1 1 1                     º
ºDETECTOR       1 2 3 4 5 6 7 8 9 0 1 2                        º
º    1          . . . . . . . . . . . .                        º
º    2          . X . . . . . . . . . .                        º
º    3          . . . . . . . . . . . .                        º
º    4          . . . . . . . . . . . .                        º
º    5          . . . . . . . . . . . .                        º
º    6          . . . . . . . . . . . .                        º
º    7          . . . . . . . . . . . .                        º
º    8          . . . . . . . . . . . .                        º
º    9          . . . . . . . . . . . .                        º
º   10          . X . . . . . . . . . .                        º
º   11          . . . . . . . . . . . .                        º
º   12          . . . . . . . . . . . .                        º
ºADDITIONAL SCREEN(S)                                          º
ÈÍÍÍÍÍÍÍÍÍÍÍÍÍÍÍÍÍÍÍÍÍÍÍÍÍÍÍÍÍÍÍÍÍÍÍÍÍÍÍÍÍÍÍÍÍÍÍÍÍÍÍÍÍÍ¼

ÉÍÍÍÍÍÍÍÍÍÍÍÍÍÍÍÍÍÍÍÍÍÍÍÍÍÍÍÍÍÍÍÍÍÍÍÍÍÍÍÍÍÍÍÍÍÍÍÍÍÍÍÍÍÍ»
º             SPEED DETECTORS                                  º
º                                                              º
º  SPEED DET NUMBER:  ...1....2....3....4º
ºONE DETECTOR SPEED:                                           º
º LOCAL DET NUMBER..     0    0    0    0º
º VEHICLE LENGTH....     0    0    0    0º
º LOOP LENGTH.......     0    0    0    0º
º                                                              º
ºTWO DETECTOR SPEED:                                           º
º LOCAL DET NUMBER..     0    0    0    0º
º SPEED TRAP LENGTH.     0    0    0    0º
º                                                              º
ºENABLE LOG.........     .    .    .    .º
º                                                              º
ºUNITS:  INCHES                                                º
ºADDITIONAL PAGE(S)                              MORE->º
ÈÍÍÍÍÍÍÍÍÍÍÍÍÍÍÍÍÍÍÍÍÍÍÍÍÍÍÍÍÍÍÍÍÍÍÍÍÍÍÍÍÍÍÍÍÍÍÍÍÍÍÍÍÍÍ¼

ÉÍÍÍÍÍÍÍÍÍÍÍÍÍÍÍÍÍÍÍÍÍÍÍÍÍÍÍÍÍÍÍÍÍÍÍÍÍÍÍÍÍÍÍÍÍÍÍÍÍÍÍÍÍÍ»
º             SPEED DETECTORS                                  º
º                                                              º
```

```
º  SPEED DET NUMBER:  ...5....6....7....8º
ºONE DETECTOR SPEED:                      º
º LOCAL DET NUMBER..     0    0    0    0º
º VEHICLE LENGTH....     0    0    0    0º
º LOOP LENGTH.......     0    0    0    0º
º                                         º
ºTWO DETECTOR SPEED:                      º
º LOCAL DET NUMBER..     0    0    0    0º
º SPEED TRAP LENGTH.     0    0    0    0º
º                                         º
ºENABLE LOG.........     .    .    .    .º
º                                         º
ºUNITS:  INCHES                           º
ºADDITIONAL PAGE(S)              <-MORE   º
ÈÍÍÍÍÍÍÍÍÍÍÍÍÍÍÍÍÍÍÍÍÍÍÍÍÍÍÍÍÍÍÍÍÍÍÍÍÍÍÍÍÍ¼

ÉÍÍÍÍÍÍÍÍÍÍÍÍÍÍÍÍÍÍÍÍÍÍÍÍÍÍÍÍÍÍÍÍÍÍÍÍÍÍÍÍÍ»
º            SPEED DETECTORS              º
º                                         º
º  SPEED DET NUMBER:  ...9...10...11...12º
ºONE DETECTOR SPEED:                      º
º LOCAL DET NUMBER..     0    0    0    0º
º VEHICLE LENGTH....     0    0    0    0º
º LOOP LENGTH.......     0    0    0    0º
º                                         º
ºTWO DETECTOR SPEED:                      º
º LOCAL DET NUMBER..     0    0    0    0º
º SPEED TRAP LENGTH.     0    0    0    0º
º                                         º
ºENABLE LOG.........     .    .    .    .º
º                                         º
º                                         º
ºEND OF SUBMENU                  MORE->   º
ÈÍÍÍÍÍÍÍÍÍÍÍÍÍÍÍÍÍÍÍÍÍÍÍÍÍÍÍÍÍÍÍÍÍÍÍÍÍÍÍÍÍ¼

ÉÍÍÍÍÍÍÍÍÍÍÍÍÍÍÍÍÍÍÍÍÍÍÍÍÍÍÍÍÍÍÍÍÍÍÍÍÍÍÍÍÍ»
º            SPEED DETECTORS              º
º                                         º
º  SPEED DET NUMBER:  ..13...14...15...16º
ºONE DETECTOR SPEED:                      º
º LOCAL DET NUMBER..     0    0    0    0º
º VEHICLE LENGTH....     0    0    0    0º
º LOOP LENGTH.......     0    0    0    0º
º                                         º
ºTWO DETECTOR SPEED:                      º
º LOCAL DET NUMBER..     0    0    0    0º
º SPEED TRAP LENGTH.     0    0    0    0º
º                                         º
ºENABLE LOG.........     .    .    .    .º
º                                         º
º                                         º
ºEND OF SUBMENU                  <-MORE   º
ÈÍÍÍÍÍÍÍÍÍÍÍÍÍÍÍÍÍÍÍÍÍÍÍÍÍÍÍÍÍÍÍÍÍÍÍÍÍÍÍÍÍ¼

ÉÍÍÍÍÍÍÍÍÍÍÍÍÍÍÍÍÍÍÍÍÍÍÍÍÍÍÍÍÍÍÍÍÍÍÍÍÍÍÍÍÍ»
º      PED DETECTOR DIAGNOSTIC PLAN       º
º                                         º
ºPLAN DET NUMBER  1  2  3  4  5  6  7  8 º
º  1  DIAG NUM..  0  0  0  0  0  0  0  0 º
º     SCALING...  1  1  1  1  1  1  1  1 º
º  2  DIAG NUM..  0  0  0  0  0  0  0  0 º
º     SCALING...  1  1  1  1  1  1  1  1 º
º  3  DIAG NUM..  0  0  0  0  0  0  0  0 º
```

```
º     SCALING...  1  1  1  1  1  1  1  1 º
º  4  DIAG NUM..  0  0  0  0  0  0  0  0 º
º     SCALING...  1  1  1  1  1  1  1  1 º
º  5  DIAG NUM..  0  0  0  0  0  0  0  0 º
º     SCALING...  1  1  1  1  1  1  1  1 º
º  6  DIAG NUM..  0  0  0  0  0  0  0  0 º
º     SCALING...  1  1  1  1  1  1  1  1 º
ºADDITIONAL SCREEN(S)              MORE->º
ÈÍÍÍÍÍÍÍÍÍÍÍÍÍÍÍÍÍÍÍÍÍÍÍÍÍÍÍÍÍÍÍÍÍÍÍÍÍÍ¼

ÉÍÍÍÍÍÍÍÍÍÍÍÍÍÍÍÍÍÍÍÍÍÍÍÍÍÍÍÍÍÍÍÍÍÍÍÍÍÍ»
º      PED DETECTOR DIAGNOSTIC PLAN      º
º                                         º
ºPLAN DET NUMBER  1  2  3  4  5  6  7  8 º
º  7  DIAG NUM..  0  0  0  0  0  0  0  0 º
º     SCALING...  1  1  1  1  1  1  1  1 º
º  8  DIAG NUM..  0  0  0  0  0  0  0  0 º
º     SCALING...  1  1  1  1  1  1  1  1 º
º                                         º
º                                         º
º                                         º
º                                         º
º                                         º
º                                         º
º                                         º
º                                         º
ºEND OF SUBMENU                    MORE->º
ÈÍÍÍÍÍÍÍÍÍÍÍÍÍÍÍÍÍÍÍÍÍÍÍÍÍÍÍÍÍÍÍÍÍÍÍÍÍÍ¼

ÉÍÍÍÍÍÍÍÍÍÍÍÍÍÍÍÍÍÍÍÍÍÍÍÍÍÍÍÍÍÍÍÍÍÍÍÍÍÍ»
º      PED DETECTOR DIAGNOSTIC PLAN      º
º                                         º
ºPLAN DET NUMBER  9 10 11 12              º
º  1  DIAG NUM..  0  0  0  0              º
º     SCALING...  1  1  1  1              º
º  2  DIAG NUM..  0  0  0  0              º
º     SCALING...  1  1  1  1              º
º  3  DIAG NUM..  0  0  0  0              º
º     SCALING...  1  1  1  1              º
º  4  DIAG NUM..  0  0  0  0              º
º     SCALING...  1  1  1  1              º
º  5  DIAG NUM..  0  0  0  0              º
º     SCALING...  1  1  1  1              º
º  6  DIAG NUM..  0  0  0  0              º
º     SCALING...  1  1  1  1              º
ºADDITIONAL SCREEN(S)           <-MORE    º
ÈÍÍÍÍÍÍÍÍÍÍÍÍÍÍÍÍÍÍÍÍÍÍÍÍÍÍÍÍÍÍÍÍÍÍÍÍÍÍ¼

ÉÍÍÍÍÍÍÍÍÍÍÍÍÍÍÍÍÍÍÍÍÍÍÍÍÍÍÍÍÍÍÍÍÍÍÍÍÍÍ»
º      PED DETECTOR DIAGNOSTIC PLAN      º
º                                         º
ºPLAN DET NUMBER  9 10 11 12              º
º  7  DIAG NUM..  0  0  0  0              º
º     SCALING...  1  1  1  1              º
º  8  DIAG NUM..  0  0  0  0              º
º     SCALING...  1  1  1  1              º
º                                         º
º                                         º
º                                         º
º                                         º
º                                         º
º                                         º
º                                         º
```

```
º                                                    º
ºEND OF SUBMENU                        <-MORE  º
ÈÍÍÍÍÍÍÍÍÍÍÍÍÍÍÍÍÍÍÍÍÍÍÍÍÍÍÍÍÍÍÍÍÍÍÍÍÍÍÍÍÍÍÍÍ¼

ÉÍÍÍÍÍÍÍÍÍÍÍÍÍÍÍÍÍÍÍÍÍÍÍÍÍÍÍÍÍÍÍÍÍÍÍÍÍÍÍÍÍÍ»
º      DETECTOR DIAGNOSTIC INTERVAL                  º
º                                                    º
ºDIAGNOSTIC     NO       MAX     ERRATIC º
º  NUMBER    ACTIVITY  PRESENCE  COUNTS  º
º    1          0         0         0   º
º    2          0         0         0   º
º    3          0         0         0   º
º    4          0         0         0   º
º    5          0         0         0   º
º    6          0         0         0   º
º    7          0         0         0   º
º    8          0         0         0   º
º    9          0         0         0   º
º   10          0         0         0   º
º   11          0         0         0   º
ºADDITIONAL SCREEN(S)                                º
ÈÍÍÍÍÍÍÍÍÍÍÍÍÍÍÍÍÍÍÍÍÍÍÍÍÍÍÍÍÍÍÍÍÍÍÍÍÍÍÍÍÍÍÍÍ¼

ÉÍÍÍÍÍÍÍÍÍÍÍÍÍÍÍÍÍÍÍÍÍÍÍÍÍÍÍÍÍÍÍÍÍÍÍÍÍÍÍÍÍÍ»
º      DETECTOR DIAGNOSTIC INTERVAL                  º
º                                                    º
ºDIAGNOSTIC     NO       MAX     ERRATIC º
º  NUMBER    ACTIVITY  PRESENCE  COUNTS  º
º   12          0         0         0   º
º   13          0         0         0   º
º   14          0         0         0   º
º   15          0         0         0   º
º   16          0         0         0   º
º   17          0         0         0   º
º   18          0         0         0   º
º   19          0         0         0   º
º   20          0         0         0   º
º   21          0         0         0   º
º   22          0         0         0   º
ºADDITIONAL SCREEN(S)                                º
ÈÍÍÍÍÍÍÍÍÍÍÍÍÍÍÍÍÍÍÍÍÍÍÍÍÍÍÍÍÍÍÍÍÍÍÍÍÍÍÍÍÍÍÍÍ¼
♀
ÉÍÍÍÍÍÍÍÍÍÍÍÍÍÍÍÍÍÍÍÍÍÍÍÍÍÍÍÍÍÍÍÍÍÍÍÍÍÍÍÍÍÍ»
º      DETECTOR DIAGNOSTIC INTERVAL                  º
º                                                    º
ºDIAGNOSTIC     NO       MAX     ERRATIC º
º  NUMBER    ACTIVITY  PRESENCE  COUNTS  º
º   22          0         0         0   º
º   23          0         0         0   º
º   24          0         0         0   º
º   25          0         0         0   º
º   26          0         0         0   º
º   27          0         0         0   º
º   28          0         0         0   º
º   29          0         0         0   º
º   30          0         0         0   º
º   31          0         0         0   º
º   32          0         0         0   º
ºEND OF SUBMENU                                      º
ÈÍÍÍÍÍÍÍÍÍÍÍÍÍÍÍÍÍÍÍÍÍÍÍÍÍÍÍÍÍÍÍÍÍÍÍÍÍÍÍÍÍÍÍÍ¼
♀
```

```
ÉÍÍÍÍÍÍÍÍÍÍÍÍÍÍÍÍÍÍÍÍÍÍÍÍÍÍÍÍÍÍÍÍÍÍÍÍÍÍÍÍÍ»
º*****************************************º
º*   ECONOLITE CONTROL PRODUCTS, INC.    *º
º*            ASC/2-2000                 *º
º*          Copyright (C) 1992           *º
º*                                       *º
º* City of Ontario, T MffdM Engineering *º
º*  ASC/2-2M0MM Co figuratiMODMer m1.1   *º
º*                                       *º
º*   SOFTWARE ASSY             VERSION   *º
º*   BOOT            32783        1.25   *º
º*   MAIN PROGRAM    32787        1.59   *º
º*   HELP            32789        1.48   *º
º*   CONFIGURATION   32790       C8145   *º
º*                                       *º
º*                                       *º
º*****************************************º
ÈÍÍÍÍÍÍÍÍÍÍÍÍÍÍÍÍÍÍÍÍÍÍÍÍÍÍÍÍÍÍÍÍÍÍÍÍÍÍÍÍÍ¼

ÉÍÍÍÍÍÍÍÍÍÍÍÍÍÍÍÍÍÍÍÍÍÍÍÍÍÍÍÍÍÍÍÍÍÍÍÍÍÍÍÍÍ»
º           CONTROLLER SEQUENCE           º
º                                         º
º    ------------ PRIORITY ------------    º
º                                1  1  1    º
º    1..2..3..4..5..6..7..8..9..0..1..2    º
ºR1  1  2| 3  4| 9 10| 0  0  0  0  0  0    º
ºR2  5  6| 7  8|11 12| 0  0  0  0  0  0    º
ºCG   .  ^  .  ^  .  ^  .  .  .  .  .  .    º
º                                         º
º                                         º
ºR1,R2 = RING 1 AND 2 PHASE ASSIGNMENT.   º
º                                         º
ºCG    = BARRIER LOCATION BETWEEN         º
º        CONCURRENT PHASE TIMING GROUPS.  º
º                                         º
ºEND OF SUBMENU                           º
ÈÍÍÍÍÍÍÍÍÍÍÍÍÍÍÍÍÍÍÍÍÍÍÍÍÍÍÍÍÍÍÍÍÍÍÍÍÍÍÍÍÍ¼

ÉÍÍÍÍÍÍÍÍÍÍÍÍÍÍÍÍÍÍÍÍÍÍÍÍÍÍÍÍÍÍÍÍÍÍÍÍÍÍÍÍÍ»
º              PHASES IN USE              º
º                                         º
º                  ----- PHASE NUMBER ----º
º                                  1 1 1º
º                  1 2 3 4 5 6 7 8 9 0 1 2º
ºPHASES IN USE     . X X X . . . X . . . .º
ºEXCLUSIVE PED     . . . . . . . . . . . .º
º                                         º
º                                         º
º                                         º
º                                         º
º                                         º
º                                         º
º                                         º
º                                         º
º                                         º
ºEND OF SUBMENU                           º
ÈÍÍÍÍÍÍÍÍÍÍÍÍÍÍÍÍÍÍÍÍÍÍÍÍÍÍÍÍÍÍÍÍÍÍÍÍÍÍÍÍÍ¼

ÉÍÍÍÍÍÍÍÍÍÍÍÍÍÍÍÍÍÍÍÍÍÍÍÍÍÍÍÍÍÍÍÍÍÍÍÍÍÍÍÍÍ»
ºPHASE TO LOAD SWITCH (MMU) ASSIGNMENT    º
º                                         º
ºLOAD       SIGNAL    LOAD       SIGNAL   º
ºSWITCH     DRIVER    SWITCH     DRIVER   º
```

```
º(MMU)      GROUP     (MMU)      GROUP   º
ºCHANNEL PH/OLAP PED  CHANNEL PH/OLAP PEDº
º   1       0     .     9       0     . º
º   2       2     .    10       0     . º
º   3       3     .    11       0     . º
º   4       4     .    12       0     . º
º   5       0     .    13       0     . º
º   6       0     .    14       4     X º
º   7       0     .    15       0     . º
º   8       8     .    16       0     . º
ºENTER 13-16 FOR OVERLAPS A-D            º
ºEND OF SUBMENU                          º
ÈÍÍÍÍÍÍÍÍÍÍÍÍÍÍÍÍÍÍÍÍÍÍÍÍÍÍÍÍÍÍÍÍÍÍÍÍÍÍ¼

ÉÍÍÍÍÍÍÍÍÍÍÍÍÍÍÍÍÍÍÍÍÍÍÍÍÍÍÍÍÍÍÍÍÍÍÍÍÍÍ»
º          SDLC OPTIONS/ENABLES          º
º                                        º
º                 ----- BIU NUMBER ----- º
º                1..2..3..4..5..6..7..8 º
ºTERM & FACIL...  X  X  .  .  .  .  .  . º
ºDETECTOR RACK..  X  .  .  .  .  .  .  . º
º                                        º
ºTYPE 2 RUNS AS TYPE 1................ X º
ºMMU DISABLE.......................... . º
ºDIAGNOSTIC ENABLE (TEST FIXTURE)..... . º
ºPEER TO PEER ENABLE.................. . º
º                                        º
ºPEER TO PEER ADDRESSES:                 º
º1) 255  2) 255  3) 255  4) 255   5) 255 º
º6) 255  7) 255  8) 255  9) 255  10) 255 º
ºEND OF SUBMENU                          º
ÈÍÍÍÍÍÍÍÍÍÍÍÍÍÍÍÍÍÍÍÍÍÍÍÍÍÍÍÍÍÍÍÍÍÍÍÍÍÍ¼

ÉÍÍÍÍÍÍÍÍÍÍÍÍÍÍÍÍÍÍÍÍÍÍÍÍÍÍÍÍÍÍÍÍÍÍÍÍÍÍ»
º         PORT2 CONFIGURATION            º
º                                        º
ºPORT2 PROTOCOL.................  TERMNL  º
ºPORT2 ENABLE..................     YES  º
º                                        º
ºAB3418 ADDRESS.................       0  º
ºAB3418 GROUP ADDRESS...........       0  º
ºAB3418 RESPONSE DELAY..........       0  º
ºAB3418 SINGLE FLAG ENABLE.....      NO  º
ºAB3418 DROP-OUT TIME..........       0  º
ºAB3418 TOD SF SELECT..........       0  º
º                                        º
ºDATA RATE (BPS)................   38.4k  º
ºDATA, PARITY, STOP............ 8, N, 1  º
º                                        º
ºEND OF SUBMENU                          º
ÈÍÍÍÍÍÍÍÍÍÍÍÍÍÍÍÍÍÍÍÍÍÍÍÍÍÍÍÍÍÍÍÍÍÍÍÍÍÍ¼

ÉÍÍÍÍÍÍÍÍÍÍÍÍÍÍÍÍÍÍÍÍÍÍÍÍÍÍÍÍÍÍÍÍÍÍÍÍÍÍ»
º         PORT3 CONFIGURATION            º
º                                        º
ºPORT3 PROTOCOL.................   TELEM  º
ºPORT3 ENABLE..................     YES  º
º                                        º
ºTELEMETRY ADDRESS.............       5  º
ºSYSTEM DETECTOR 9-16 ADDRESS..       0  º
ºTELEMETRY RESPONSE DELAY......    8000  º
º                                        º
ºAB3418 ADDRESS................       0  º
```

```
ºAB3418 GROUP ADDRESS.....          0  º
ºAB3418 RESPONSE DELAY.....         0  º
ºAB3418 SINGLE FLAG ENABLE.....    NO  º
ºAB3418 DROP-OUT TIME.....          0  º
ºAB3418 TOD SF SELECT.....          0  º
ºADDITIONAL SCREEN(S)                  º
ÈÍÍÍÍÍÍÍÍÍÍÍÍÍÍÍÍÍÍÍÍÍÍÍÍÍÍÍÍÍÍÍÍÍÍÍÍÍ¼

ÉÍÍÍÍÍÍÍÍÍÍÍÍÍÍÍÍÍÍÍÍÍÍÍÍÍÍÍÍÍÍÍÍÍÍÍÍÍ»
º         PORT3 CONFIGURATION          º
o                                      o
o                                      o
ºDUPLEX -- HALF or FULL.....    FULL   º
ºMODEM DATA RATE (BPS).....     1200   º
ºDATA, PARITY, STOP..... 8, O, 1       º
o                                      o
o                                      o
o                                      o
o                                      o
o                                      o
o                                      o
o                                      o
o                                      o
o                                      o
ºEND OF SUBMENU                        º
ÈÍÍÍÍÍÍÍÍÍÍÍÍÍÍÍÍÍÍÍÍÍÍÍÍÍÍÍÍÍÍÍÍÍÍÍÍÍ¼

ÉÍÍÍÍÍÍÍÍÍÍÍÍÍÍÍÍÍÍÍÍÍÍÍÍÍÍÍÍÍÍÍÍÍÍÍÍÍ»
º            ENABLE EVENT LOGS         º
o                                      o
ºCRITICAL RFE'S (MMU/TF) . . . . . .   X º
ºNON-CRITICAL RFE'S (DET/TEST) . . .   . º
ºDETECTOR ERRORS . . . . . .           X º
ºCOORDINATION ERRORS . . . . . .       X º
ºMMU FLASH FAULTS  . . . . . .         X º
ºLOCAL FLASH FAULTS  . . . . . .       X º
ºPREEMPT . . . . . .                   X º
ºPOWER ON/OFF  . . . . . .             X º
ºLOW BATTERY . . . . . .               X º
ºSPARE . . . . . .                     . º
ºALARM 1 . . . . . .                   . º
ºALARM 2 . . . . . .                   . º
ºALARM 3 . . . . . .                   . º
ºADDITIONAL SCREEN(S)                  º
ÈÍÍÍÍÍÍÍÍÍÍÍÍÍÍÍÍÍÍÍÍÍÍÍÍÍÍÍÍÍÍÍÍÍÍÍÍÍ¼

ÉÍÍÍÍÍÍÍÍÍÍÍÍÍÍÍÍÍÍÍÍÍÍÍÍÍÍÍÍÍÍÍÍÍÍÍÍÍ»
º            ENABLE EVENT LOGS         º
o                                      o
ºALARM 4 . . . . . .                   . º
ºALARM 5 . . . . . .                   . º
ºALARM 6 . . . . . .                   . º
ºALARM 7 . . . . . .                   . º
ºALARM 8 . . . . . .                   . º
ºALARM 9 . . . . . .                   . º
ºALARM 10  . . . . . .                 . º
ºALARM 11  . . . . . .                 . º
ºALARM 12  . . . . . .                 . º
ºALARM 13  . . . . . .                 . º
ºALARM 14  . . . . . .                 . º
ºALARM 15  . . . . . .                 . º
ºALARM 16  . . . . . .                 . º
ºEND OF SUBMENU                        º
```

```
ÈÍÍÍÍÍÍÍÍÍÍÍÍÍÍÍÍÍÍÍÍÍÍÍÍÍÍÍÍÍÍÍÍÍÍÍÍÍÍÍÍÍÍÍÍÍ¼

ÉÍÍÍÍÍÍÍÍÍÍÍÍÍÍÍÍÍÍÍÍÍÍÍÍÍÍÍÍÍÍÍÍÍÍÍÍÍÍÍÍÍÍÍÍÍ»
º                  OPTIONS                              º
º                                                       º
º                                                       º
º                                                       º
ºSUPERVISOR ACCESS CODE...... 0000                      º
º                                                       º
ºDATA CHANGE ACCESS CODE..... 0000                      º
º                                                       º
ºKEY CLICK ENABLE.............  YES                      º
º                                                       º
ºBACKLIGHT ENABLE.............  YES                      º
º                                                       º
º                                                       º
º                                                       º
º                                                       º
ºEND OF SUBMENU                                         º
ÈÍÍÍÍÍÍÍÍÍÍÍÍÍÍÍÍÍÍÍÍÍÍÍÍÍÍÍÍÍÍÍÍÍÍÍÍÍÍÍÍÍÍÍÍÍ¼

ÉÍÍÍÍÍÍÍÍÍÍÍÍÍÍÍÍÍÍÍÍÍÍÍÍÍÍÍÍÍÍÍÍÍÍÍÍÍÍÍÍÍÍÍÍÍ»
º                  MMU PROGRAM                          º
ºCAN SERVE WITH:                                        º
º             1 1 1 1 1 1 1                             º
ºCHANNEL      6 5 4 3 2 1 0 9 8 7 6 5 4 3 2º
º  1          . . . . . . . . . . . . . . .º
º  2          . . . . . . . . . . . . . .  º
º  3          . . . . . . . . . . . . .    º
º  4          . . . . . . . . . . . .      º
º  5          . . . . . . . . . . .        º
º  6          . . . . . . . . . .          º
º  7          . . . . . . . . .            º
º  8          . . . . . . . .              º
º  9          . . . . . . .                º
º 10          . . . . . .                  º
º 11          . . . . .                    º
ºADDITIONAL SCREEN(S)                                   º
ÈÍÍÍÍÍÍÍÍÍÍÍÍÍÍÍÍÍÍÍÍÍÍÍÍÍÍÍÍÍÍÍÍÍÍÍÍÍÍÍÍÍÍÍÍÍ¼
♀
ÉÍÍÍÍÍÍÍÍÍÍÍÍÍÍÍÍÍÍÍÍÍÍÍÍÍÍÍÍÍÍÍÍÍÍÍÍÍÍÍÍÍÍÍÍÍ»
º                  MMU PROGRAM                          º
ºCAN SERVE WITH:                                        º
º             1 1 1 1 1 1 1                             º
ºCHANNEL      6 5 4 3 2 1 0 9 8 7 6 5 4 3 2º
º 12          . . . .                                   º
º 13          . . .                                     º
º 14          . .                                       º
º 15          .                                         º
º                                                       º
º                                                       º
º                                                       º
º                                                       º
º                                                       º
º                                                       º
º                                                       º
ºEND OF SUBMENU                                         º
ÈÍÍÍÍÍÍÍÍÍÍÍÍÍÍÍÍÍÍÍÍÍÍÍÍÍÍÍÍÍÍÍÍÍÍÍÍÍÍÍÍÍÍÍÍÍ¼
♀
ÉÍÍÍÍÍÍÍÍÍÍÍÍÍÍÍÍÍÍÍÍÍÍÍÍÍÍÍÍÍÍÍÍÍÍÍÍÍÍÍÍÍÍÍÍÍ»
º*****************************************º
º*   ECONOLITE CONTROL PRODUCTS, INC.    *º
º*              ASC/2-2000               *º
```

```
º*          Copyright (C) 1992          *º
º*                                      *º
º* City of Ontario, T MffdM Engineering *º
º*  ASC/2-2M0MM Co figuratiMODMer m1.1  *º
º*                                      *º
º*   SOFTWARE ASSY             VERSION  *º
º*   BOOT            32783        1.25  *º
º*   MAIN PROGRAM    32787        1.59  *º
º*   HELP            32789        1.48  *º
º*   CONFIGURATION   32790       C8145  *º
º*                                      *º
º*                                      *º
º**************************************º
ÈÍÍÍÍÍÍÍÍÍÍÍÍÍÍÍÍÍÍÍÍÍÍÍÍÍÍÍÍÍÍÍÍÍÍÍÍÍÍ¼

ÉÍÍÍÍÍÍÍÍÍÍÍÍÍÍÍÍÍÍÍÍÍÍÍÍÍÍÍÍÍÍÍÍÍÍÍÍÍÍ»
º         CONTROLLER TIMING DATA             º
ºPHASE...   1...2...3...4...5...6...7...8º
ºMIN GRN.   0   7   8   8   0   0   0   8º
ºBIKE GRN   0   0   0   0   0   0   0   0º
ºCS MGRN.   0   0   0   0   0   0   0   0º
ºWALK....   0   0   0   4   0   0   0   0º
ºPED CLR.   0   7   0  23   0   7   0   7º
ºVEH EXT. 0.0 2.5 2.0 3.5 0.0 0.0 0.0 3.5º
ºVEH EXT2 0.0 0.0 0.0 0.0 0.0 0.0 0.0 0.0º
ºMAX EXT.   0  20  20  10   0   0   0  10º
ºMAX1....   0  20  20  30   0   0   0  30º
ºMAX2....   0  25  25  40   0   0   0  40º
ºMAX3....   0   0   0   0   0   0   0   0º
º                                          º
ºADDITIONAL SCREEN(S)              MORE->º
ÈÍÍÍÍÍÍÍÍÍÍÍÍÍÍÍÍÍÍÍÍÍÍÍÍÍÍÍÍÍÍÍÍÍÍÍÍÍÍ¼

ÉÍÍÍÍÍÍÍÍÍÍÍÍÍÍÍÍÍÍÍÍÍÍÍÍÍÍÍÍÍÍÍÍÍÍÍÍÍÍ»
º         CONTROLLER TIMING DATA             º
ºPHASE...   1...2...3...4...5...6...7...8º
ºYELLOW.. 3.0 3.0 5.0 5.0 3.0 3.0 3.0 5.0º
ºRED CLR. 0.0 2.0 2.0 2.0 0.0 0.0 0.0 2.0º
ºRED RVT. 0.0 5.0 5.0 5.0 0.0 0.0 0.0 5.0º
º                                          º
ºACT B4..   0   0   0   0   0   0   0   0º
ºSEC/ACT. 0.0 0.0 0.0 0.0 0.0 0.0 0.0 0.0º
ºMAX INI.   0   0   0   0   0   0   0   0º
ºTIME B4.   0   0   0  20   0   0   0  20º
ºCARS WT.   0   0   0   0   0   0   0   0º
ºTTREDUC.   0   0   0  15   0   0   0  15º
ºMIN GAP. 0.0 0.0 0.0 0.0 0.0 0.0 0.0 0.0º
º                                          º
º                                          º
ºEND OF SUBMENU                    MORE->º
ÈÍÍÍÍÍÍÍÍÍÍÍÍÍÍÍÍÍÍÍÍÍÍÍÍÍÍÍÍÍÍÍÍÍÍÍÍÍÍ¼

ÉÍÍÍÍÍÍÍÍÍÍÍÍÍÍÍÍÍÍÍÍÍÍÍÍÍÍÍÍÍÍÍÍÍÍÍÍÍÍ»
º         CONTROLLER TIMING DATA             º
ºPHASE...   9..10..11..12                  º
ºMIN GRN.   0   0   0   0                  º
ºBIKE GRN   0   0   0   0                  º
ºCS MGRN.   0   0   0   0                  º
ºWALK....   0   0   0   0                  º
ºPED CLR.   0   7   0   7                  º
ºVEH EXT. 0.0 0.0 0.0 0.0                  º
ºVEH EXT2 0.0 0.0 0.0 0.0                  º
```

```
ºMAX EXT.   0   0   0   0                 º
ºMAX1....   0   0   0   0                 º
ºMAX2....   0   0   0   0                 º
ºMAX3....   0   0   0   0                 º
ºDET MAX.   0   0   0   0                 º
º                                         º
ºADDITIONAL SCREEN(S)            <-MORE   º
ÈÍÍÍÍÍÍÍÍÍÍÍÍÍÍÍÍÍÍÍÍÍÍÍÍÍÍÍÍÍÍÍÍÍÍÍÍÍÍ¼

ÉÍÍÍÍÍÍÍÍÍÍÍÍÍÍÍÍÍÍÍÍÍÍÍÍÍÍÍÍÍÍÍÍÍÍÍÍÍÍ»
º          CONTROLLER TIMING DATA         º
ºPHASE...    9..10..11..12                º
ºYELLOW.. 3.0 3.0 3.0 3.0                 º
ºRED CLR. 0.0 0.0 0.0 0.0                 º
ºRED RVT. 0.0 0.0 0.0 0.0                 º
º                                         º
ºACT B4..   0   0   0   0                 º
ºSEC/ACT. 0.0 0.0 0.0 0.0                 º
ºMAX INI.   0   0   0   0                 º
ºTIME B4.   0   0   0   0                 º
ºCARS WT.   0   0   0   0                 º
ºTTREDUC.   0   0   0   0                 º
ºMIN GAP. 0.0 0.0 0.0 0.0                 º
º                                         º
º                                         º
ºEND OF SUBMENU                  <-MORE   º
ÈÍÍÍÍÍÍÍÍÍÍÍÍÍÍÍÍÍÍÍÍÍÍÍÍÍÍÍÍÍÍÍÍÍÍÍÍÍÍ¼

ÉÍÍÍÍÍÍÍÍÍÍÍÍÍÍÍÍÍÍÍÍÍÍÍÍÍÍÍÍÍÍÍÍÍÍÍÍÍÍ»
º         PHASE OVERLAP ASSIGNMENTS       º
ºOVERLAP CONSISTS OF PHASES:        1 1 1º
ºOVLP PHASE       1 2 3 4 5 6 7 8 9 0 1 2º
º     1           X . . . . . . . . . . .º
º     2           . X . . . . . . . . . .º
º     3           . . X . . . . . . . . .º
º     4           . . . X . . . . . . . .º
º     5           . . . . X . . . . . . .º
º     6           . . . . . X . . . . . .º
º     7           . . . . . . X . . . . .º
º     8           . . . . . . . X . . . .º
º     9           . . . . . . . . X . . .º
º    10           . . . . . . . . . X . .º
º    11           . . . . . . . . . . X .º
º    12           . . . . . . . . . . . Xº
ºEND OF SUBMENU                           º
ÈÍÍÍÍÍÍÍÍÍÍÍÍÍÍÍÍÍÍÍÍÍÍÍÍÍÍÍÍÍÍÍÍÍÍÍÍÍÍ¼

ÉÍÍÍÍÍÍÍÍÍÍÍÍÍÍÍÍÍÍÍÍÍÍÍÍÍÍÍÍÍÍÍÍÍÍÍÍÍÍ»
º          PED TIMING CARRYOVER           º
º                                         º
º        PHASE      CARRYOVER PHASE       º
º          1              0               º
º          2              0               º
º          3              0               º
º          4              0               º
º          5              0               º
º          6              0               º
º          7              0               º
º          8              0               º
º          9              0               º
º         10              0               º
º         11              0               º
º         12              0               º
```

```
ºEND OF SUBMENU                                 º
ÈÍÍÍÍÍÍÍÍÍÍÍÍÍÍÍÍÍÍÍÍÍÍÍÍÍÍÍÍÍÍÍÍÍÍÍÍÍÍÍÍÍÍ¼

ÉÍÍÍÍÍÍÍÍÍÍÍÍÍÍÍÍÍÍÍÍÍÍÍÍÍÍÍÍÍÍÍÍÍÍÍÍÍÍÍÍÍÍ»
º         CONTROLLER RECALL DATA                º
º                                               º
ºPHASE:                                 1 1 1ºº
ºPHASE.....  1 2 3 4 5 6 7 8 9 0 1 2º
ºLOCKING MEMORY.  . . . . . . . . . . . .º
ºVEHICLE RECALL.  . . . X . . . X . . . .º
ºPED RECALL.....  . . . . . . . . . . . .º
ºRECALL TO MAX..  . . . . . . . . . . . .º
ºSOFT RECALL....  . . . . . . . . . . . .º
ºDON'T REST HERE  . . . . . . . . . . . .º
ºPED DARK N/CALL  . . . . . . . . . . . .º
º                                               º
º                                               º
º                                               º
º                                               º
ºEND OF SUBMENU                                 º
ÈÍÍÍÍÍÍÍÍÍÍÍÍÍÍÍÍÍÍÍÍÍÍÍÍÍÍÍÍÍÍÍÍÍÍÍÍÍÍÍÍÍÍ¼

ÉÍÍÍÍÍÍÍÍÍÍÍÍÍÍÍÍÍÍÍÍÍÍÍÍÍÍÍÍÍÍÍÍÍÍÍÍÍÍÍÍÍÍ»
º         CONTROLLER OVERLAP DATA               º
º                                               º
º                                       1 1 1ºº
ºOVERLAP A.....   1 2 3 4 5 6 7 8 9 0 1 2º
ºSTANDARD......   . . . . . . . . . . . .º
ºPROTECTED.....   . . . . . . . . . . . .º
ºPERMITTED.....   . . . . . . . . . . . .º
ºENABLE LAG....   . . . . . . . . . . . .º
ºENABLE LEAD...   . . . . . . . . . . . .º
ºSPARE.........   . . . . . . . . . . . .º
º                                               º
º     ADVANCE GREEN TIMER      0.0              º
º     LAG/LEAD GREEN TIMER     0.0              º
º     LAG/LEAD YELLOW TIMER    0.0              º
º     LAG/LEAD RED TIMER       0.0              º
ºADDITIONAL PAGE(S)                             º
ÈÍÍÍÍÍÍÍÍÍÍÍÍÍÍÍÍÍÍÍÍÍÍÍÍÍÍÍÍÍÍÍÍÍÍÍÍÍÍÍÍÍÍ¼

ÉÍÍÍÍÍÍÍÍÍÍÍÍÍÍÍÍÍÍÍÍÍÍÍÍÍÍÍÍÍÍÍÍÍÍÍÍÍÍÍÍÍÍ»
º         CONTROLLER OVERLAP DATA               º
º                                               º
º                                       1 1 1ºº
ºOVERLAP B.....   1 2 3 4 5 6 7 8 9 0 1 2º
ºSTANDARD......   . . . . . . . . . . . .º
ºPROTECTED.....   . . . . . . . . . . . .º
ºPERMITTED.....   . . . . . . . . . . . .º
ºENABLE LAG....   . . . . . . . . . . . .º
ºENABLE LEAD...   . . . . . . . . . . . .º
ºSPARE.........   . . . . . . . . . . . .º
º                                               º
º     ADVANCE GREEN TIMER      0.0              º
º     LAG/LEAD GREEN TIMER     0.0              º
º     LAG/LEAD YELLOW TIMER    0.0              º
º     LAG/LEAD RED TIMER       0.0              º
ºADDITIONAL PAGE(S)                             º
ÈÍÍÍÍÍÍÍÍÍÍÍÍÍÍÍÍÍÍÍÍÍÍÍÍÍÍÍÍÍÍÍÍÍÍÍÍÍÍÍÍÍÍ¼

ÉÍÍÍÍÍÍÍÍÍÍÍÍÍÍÍÍÍÍÍÍÍÍÍÍÍÍÍÍÍÍÍÍÍÍÍÍÍÍÍÍÍÍ»
º         CONTROLLER OVERLAP DATA               º
º                                               º
```

```
º                                        1 1 1º
ºOVERLAP C.....   1 2 3 4 5 6 7 8 9 0 1 2º
ºSTANDARD......   . . . . . . . . . . . .º
ºPROTECTED.....   . . . . . . . . . . . .º
ºPERMITTED.....   . . . . . . . . . . . .º
ºENABLE LAG....   . . . . . . . . . . . .º
ºENABLE LEAD...   . . . . . . . . . . . .º
ºSPARE.........   . . . . . . . . . . . .º
º                                         º
º     ADVANCE GREEN TIMER      0.0        º
º     LAG/LEAD GREEN TIMER     0.0        º
º     LAG/LEAD YELLOW TIMER    0.0        º
º     LAG/LEAD RED TIMER       0.0        º
ºADDITIONAL PAGE(S)                       º
ÈÍÍÍÍÍÍÍÍÍÍÍÍÍÍÍÍÍÍÍÍÍÍÍÍÍÍÍÍÍÍÍÍÍÍÍÍÍÍÍÍÍ¼

ÉÍÍÍÍÍÍÍÍÍÍÍÍÍÍÍÍÍÍÍÍÍÍÍÍÍÍÍÍÍÍÍÍÍÍÍÍÍÍÍÍÍ»
º         CONTROLLER OVERLAP DATA         º
º                                         º
º                                        1 1 1º
ºOVERLAP D.....   1 2 3 4 5 6 7 8 9 0 1 2º
ºSTANDARD......   . . . . . . . . . . . .º
ºPROTECTED.....   . . . . . . . . . . . .º
ºPERMITTED.....   . . . . . . . . . . . .º
ºENABLE LAG....   . . . . . . . . . . . .º
ºENABLE LEAD...   . . . . . . . . . . . .º
ºSPARE.........   . . . . . . . . . . . .º
º                                         º
º     ADVANCE GREEN TIMER      0.0        º
º     LAG/LEAD GREEN TIMER     0.0        º
º     LAG/LEAD YELLOW TIMER    0.0        º
º     LAG/LEAD RED TIMER       0.0        º
ºADDITIONAL PAGE(S)                       º
ÈÍÍÍÍÍÍÍÍÍÍÍÍÍÍÍÍÍÍÍÍÍÍÍÍÍÍÍÍÍÍÍÍÍÍÍÍÍÍÍÍÍ¼

♀

ÉÍÍÍÍÍÍÍÍÍÍÍÍÍÍÍÍÍÍÍÍÍÍÍÍÍÍÍÍÍÍÍÍÍÍÍÍÍÍÍÍÍ»
º        PED OVERLAP ASSIGNMENTS          º
ºOVERLAP CONSISTS OF PHASES:        1 1 1º
ºOVLP PHASE       1 2 3 4 5 6 7 8 9 0 1 2º
º     1           . . . . . . . . . . . .º
º     2           . . . . . . . . . . . .º
º     3           . . . . . . . . . . . .º
º     4           . . . . . . . . . . . .º
º     5           . . . . . . . . . . . .º
º     6           . . . . . . . . . . . .º
º     7           . . . . . . . . . . . .º
º     8           . . . . . . . . . . . .º
º     9           . . . . . . . . . . . .º
º    10           . . . . . . . . . . . .º
º    11           . . . . . . . . . . . .º
º    12           . . . . . . . . . . . .º
ºEND OF SUBMENU                           º
ÈÍÍÍÍÍÍÍÍÍÍÍÍÍÍÍÍÍÍÍÍÍÍÍÍÍÍÍÍÍÍÍÍÍÍÍÍÍÍÍÍÍ¼

ÉÍÍÍÍÍÍÍÍÍÍÍÍÍÍÍÍÍÍÍÍÍÍÍÍÍÍÍÍÍÍÍÍÍÍÍÍÍÍÍÍÍ»
º       CONTROLLER START/FLASH DATA       º
º                                        1 1 1º
ºPHASE.........   1 2 3 4 5 6 7 8 9 0 1 2º
ºPOWER START....  . X . . . . . . . . . .º
ºEXTERNAL START.  . X . . . . . . . . . .º
ºENTRY REM FLASH  . . . X . . . X . . . .º
ºEXIT REM FLASH.  . X . . . . . . . . . .º
ºREM FLASH YEL..  . . . . . . . . . . . .º
```

```
ºFL TOGETHER PHS  . X . X . . . X . . . .º
ºFL TOGETHER OVLPS A: .  B: .  C: .  D: .º
º                                         º
ºPOWER START.............   YELLOW       º
ºEXTERNAL START..........   YELLOW       º
ºPOWER START ALL RED TIME..  0 SECONDS   º
ºPOWER START FLASH TIME....  0 SECONDS   º
ºADDITIONAL PAGE(S)                       º
ÈÍÍÍÍÍÍÍÍÍÍÍÍÍÍÍÍÍÍÍÍÍÍÍÍÍÍÍÍÍÍÍÍÍÍÍÍÍÍ¼

ÉÍÍÍÍÍÍÍÍÍÍÍÍÍÍÍÍÍÍÍÍÍÍÍÍÍÍÍÍÍÍÍÍÍÍÍÍÍÍ»
º       CONTROLLER START/FLASH DATA       º
º                                         º
ºREMOTE FLASH OPTIONS:                    º
º                                         º
ºOUT OF FLASH YELLOW..... X               º
ºOUT OF FLASH ALL RED..... .              º
ºMINIMUM RECALL.......... .               º
ºSPARE................... .               º
ºFLASH THRU LOAD SWITCHES.... .           º
ºCYCLE THROUGH PHASES..... .              º
º                                         º
º                                         º
º                                         º
º                                         º
º                                         º
ºEND OF SUBMENU                           º
ÈÍÍÍÍÍÍÍÍÍÍÍÍÍÍÍÍÍÍÍÍÍÍÍÍÍÍÍÍÍÍÍÍÍÍÍÍÍÍ¼

ÉÍÍÍÍÍÍÍÍÍÍÍÍÍÍÍÍÍÍÍÍÍÍÍÍÍÍÍÍÍÍÍÍÍÍÍÍÍÍ»
º            NO SERVE PHASES              º
ºCANNOT SERVE WITH: 1 1 1                 º
ºPHASE              2 1 0 9 8 7 6 5 4 3 2º
º  1                . . . . . . . . . . .º
º  2                . . . . . . . . . .  º
º  3                . . . . . . . . .    º
º  4                . . . . . . . .      º
º  5                . . . . . . .        º
º  6                . . . . . .          º
º  7                . . . . .            º
º  8                . . . .              º
º  9                . . .                º
º 10                . .                  º
º 11                .                    º
º                                         º
ºEND OF SUBMENU                           º
ÈÍÍÍÍÍÍÍÍÍÍÍÍÍÍÍÍÍÍÍÍÍÍÍÍÍÍÍÍÍÍÍÍÍÍÍÍÍÍ¼

ÉÍÍÍÍÍÍÍÍÍÍÍÍÍÍÍÍÍÍÍÍÍÍÍÍÍÍÍÍÍÍÍÍÍÍÍÍÍÍ»
º                 DIMMING                 º
º                                         º
ºLOAD SWITCH....  1..2..3..4..5..6..7..8 º
ºDIM GRN/WLK....  .  .  .  .  .  .  .  . º
ºDIM YEL/PC.....  .  .  .  .  .  .  .  . º
ºDIM RED/DW.....  .  .  .  .  .  .  .  . º
º                                         º
ºLOAD SWITCH....  9.10.11.12.13.14.15.16 º
ºDIM GRN/WLK....  .  .  .  .  .  .  .  . º
ºDIM YEL/PC.....  .  .  .  .  .  .  .  . º
ºDIM RED/DW.....  .  .  .  .  .  .  .  . º
º                                         º
º                                         º
º                                         º
```

```
º                                                    º
ºEND OF SUBMENU                                      º
ÈÍÍÍÍÍÍÍÍÍÍÍÍÍÍÍÍÍÍÍÍÍÍÍÍÍÍÍÍÍÍÍÍÍÍÍÍÍÍÍÍÍÍÍÍÍ¼

ÉÍÍÍÍÍÍÍÍÍÍÍÍÍÍÍÍÍÍÍÍÍÍÍÍÍÍÍÍÍÍÍÍÍÍÍÍÍÍÍÍÍÍÍÍÍ»
º         CONTROLLER OPTION DATA                     º
º                                          1 1 1     º
ºPHASE.....  1 2 3 4 5 6 7 8 9 0 1 2     º
ºGUAR PASSAGE...  . . . . . . . . . . . .     º
ºNONACTUATED I..  . . . . . . . . . . . .     º
ºNONACTUATED II.  . . . . . . . . . . . .     º
ºDUAL ENTRY.....  . . . . . . . . . . . .     º
ºCOND SERVICE...  . . X . . . . . . . . .     º
ºCOND RESERVICE.  . . . . . . . . . . . .     º
ºREST IN WALK...  . . . . . . . . . . . .     º
ºFLASHING WALK..  . . . . . . . . . . . .     º
º                                                    º
º----- FIVE SECTION LEFT TURN HEADS -----     º
º   5-2 :  .     7-4 :  .     1-6 :  .     º
º   3-8 :  .    11-10:  .    9-12 :  .     º
ºADDITIONAL PAGE(S)                                  º
ÈÍÍÍÍÍÍÍÍÍÍÍÍÍÍÍÍÍÍÍÍÍÍÍÍÍÍÍÍÍÍÍÍÍÍÍÍÍÍÍÍÍÍÍÍÍ¼
♀
ÉÍÍÍÍÍÍÍÍÍÍÍÍÍÍÍÍÍÍÍÍÍÍÍÍÍÍÍÍÍÍÍÍÍÍÍÍÍÍÍÍÍÍÍÍÍ»
º         CONTROLLER OPTION DATA                     º
ºDUAL ENTRY..................... OFF     º
ºCOND SERVICE ENABLE.............  ON     º
ºCOND SERVICE DET X SWITCHING.... OFF     º
ºPED CLR PROTECT................. OFF     º
ºSPEC PREEMPT OVLP FLASH......... OFF     º
ºLOCK DETECTORS IN RED ONLY...... OFF     º
ºRESERVED........................ OFF     º
ºRESERVED........................ OFF     º
ºBACKUP PROTECTION GROUP 1....... OFF     º
ºBACKUP PROTECTION GROUP 2....... OFF     º
ºBACKUP PROTECTION GROUP 3....... OFF     º
ºSIMULTANEOUS GAP GROUP 1........ OFF     º
ºSIMULTANEOUS GAP GROUP 2........  ON     º
ºSIMULTANEOUS GAP GROUP 3........ OFF     º
ºEND OF SUBMENU                                      º
ÈÍÍÍÍÍÍÍÍÍÍÍÍÍÍÍÍÍÍÍÍÍÍÍÍÍÍÍÍÍÍÍÍÍÍÍÍÍÍÍÍÍÍÍÍÍ¼
♀
ÉÍÍÍÍÍÍÍÍÍÍÍÍÍÍÍÍÍÍÍÍÍÍÍÍÍÍÍÍÍÍÍÍÍÍÍÍÍÍÍÍÍÍÍÍÍ»
º*****************************************º
º*   ECONOLITE CONTROL PRODUCTS, INC.    *º
º*            ASC/2-2000                 *º
º*          Copyright (C) 1992           *º
º*                                       *º
º* City of Ontario, T MffdM Engineering *º
º*  ASC/2-2M0MM Co figuratiMODMer m1.1   *º
º*                                       *º
º*   SOFTWARE ASSY             VERSION   *º
º*   BOOT           32783        1.25    *º
º*   MAIN PROGRAM   32787        1.59    *º
º*   HELP           32789        1.48    *º
º*   CONFIGURATION  32790       C8145    *º
º*                                       *º
º*                                       *º
º*****************************************º
ÈÍÍÍÍÍÍÍÍÍÍÍÍÍÍÍÍÍÍÍÍÍÍÍÍÍÍÍÍÍÍÍÍÍÍÍÍÍÍÍÍÍÍÍÍÍ¼

ÉÍÍÍÍÍÍÍÍÍÍÍÍÍÍÍÍÍÍÍÍÍÍÍÍÍÍÍÍÍÍÍÍÍÍÍÍÍÍÍÍÍÍÍÍÍ»
º          COORDINATOR OPTIONS                     º
```

```
º                                                  º
ºSPLIT UNITS..     %    ACT CRD PHASE..  Xº
ºOFFSET UNITS.     %    ACT WALK/REST..  .º
ºINTERCNT FMT.   STD    INHIBIT MAX....  Xº
ºINTERCNT SRC.   NIC    MAX2 SELECT....  .º
ºRESYNC COUNT.     0    MULTISYNC......  .º
ºTRANSITION...   SMOOTH FLOAT FORCE OFF  .º
ºDWELL PERIOD.     0%                     º
º                                         º
º                                         º
º                             A B C D E F º
ºFREE ALTERNATE SEQUENCE     . . . . . .  º
º                                         º
º                                         º
ºEND OF SUBMENU                           º
ÈÍÍÍÍÍÍÍÍÍÍÍÍÍÍÍÍÍÍÍÍÍÍÍÍÍÍÍÍÍÍÍÍÍÍÍÍÍÍÍÍÍÍ¼

ÉÍÍÍÍÍÍÍÍÍÍÍÍÍÍÍÍÍÍÍÍÍÍÍÍÍÍÍÍÍÍÍÍÍÍÍÍÍÍÍÍÍÍ»
º      COORD MANUAL AND SPLIT DEMAND      º
º                                         º
ºMANUAL ENABLE:  ON    MANUAL PATTERN   0º
º                                         º
º-----------------------------------------º
º                                         º
ºSPLIT DEMAND:        DEMAND 1  DEMAND 2  º
ºDEMAND CALL TIME        0s        0s     º
ºDEMAND CYCLE COUNT      0         0      º
º                                         º
º                                  1 1 1º
ºDEMAND PHASE:    1 2 3 4 5 6 7 8 9 0 1 2º
ºDEMAND 1 PHASES  . . . . . . . . . . . .º
ºDEMAND 2 PHASES  . . . . . . . . . . . .º
º                                         º
ºEND OF SUBMENU                           º
ÈÍÍÍÍÍÍÍÍÍÍÍÍÍÍÍÍÍÍÍÍÍÍÍÍÍÍÍÍÍÍÍÍÍÍÍÍÍÍÍÍÍÍ¼

ÉÍÍÍÍÍÍÍÍÍÍÍÍÍÍÍÍÍÍÍÍÍÍÍÍÍÍÍÍÍÍÍÍÍÍÍÍÍÍÍÍÍÍ»
º        COORD AUTO PERM MIN GREEN        º
º                                         º
º        PHASE   AUTO PERM MIN GRN        º
º          1              0s              º
º          2              0s              º
º          3              0s              º
º          4              0s              º
º          5              0s              º
º          6              0s              º
º          7              0s              º
º          8              0s              º
º          9              0s              º
º         10              0s              º
º         11              0s              º
º         12              0s              º
ºEND OF SUBMENU                           º
ÈÍÍÍÍÍÍÍÍÍÍÍÍÍÍÍÍÍÍÍÍÍÍÍÍÍÍÍÍÍÍÍÍÍÍÍÍÍÍÍÍÍÍ¼

ÉÍÍÍÍÍÍÍÍÍÍÍÍÍÍÍÍÍÍÍÍÍÍÍÍÍÍÍÍÍÍÍÍÍÍÍÍÍÍÍÍÍÍ»
ºCOORD PATTERN 31                         º
º                                         º
ºCYCLE LENGTH..... 100s  C/O/S.....  411 º
ºOFFSET.....  28%                         º
ºSPLITS:                                  º
ºPHASE  1)  0%   2) 27%   3) 20%   4) 53%º
ºPHASE  5)  0%   6)  0%   7)  0%   8) 73%º
```

```
ºPHASE  9)  0%  10)  0%  11)  0%  12)  0%º
º                                         º
ºVEH PERMISSIVE.......  [1]   0% [2]   0%º
ºVEH PERM 2 DISP.....   0%                 º
ºPHASE RESERVICE.....   .                  º
ºSPLIT EXTENSION/RING.  [1]   0% [2]   0%º
ºSPL DMD PATTERN......  [1]   0  [2]   0 º
ºXARTERY PATTERN.....   0                  º
ºADDITIONAL SCREEN(S)                     º
ÈÍÍÍÍÍÍÍÍÍÍÍÍÍÍÍÍÍÍÍÍÍÍÍÍÍÍÍÍÍÍÍÍÍÍÍÍÍÍ¼

ÉÍÍÍÍÍÍÍÍÍÍÍÍÍÍÍÍÍÍÍÍÍÍÍÍÍÍÍÍÍÍÍÍÍÍÍÍÍÍ»
º                                 1 1 1º
ºPHASE            1 2 3 4 5 6 7 8 9 0 1 2º
ºCOORD PHASES     . . . X . . . X . . . .º
ºVEHICLE RECALL   . . . . . . . . . . . .º
ºVEH MAX RECALL   . . . . . . . . . . . .º
ºPED RECALL       . . . . . . . . . . . .º
ºPHASE OMIT       . . . . . . . . . . . .º
ºSPARE            . . . . . . . . . . . .º
º                                         º
º                 A B C D E F             º
ºALT SEQUENCE:    X . . . . .             º
º                                         º
º                                         º
º                                         º
º                                         º
ºADDITIONAL SCREEN(S)                     º
ÈÍÍÍÍÍÍÍÍÍÍÍÍÍÍÍÍÍÍÍÍÍÍÍÍÍÍÍÍÍÍÍÍÍÍÍÍÍÍ¼

ÉÍÍÍÍÍÍÍÍÍÍÍÍÍÍÍÍÍÍÍÍÍÍÍÍÍÍÍÍÍÍÍÍÍÍÍÍÍÍ»
ºCOORD PATTERN 33                         º
º                                         º
ºCYCLE LENGTH..... 100s  C/O/S.....  611 º
ºOFFSET.....  40%                         º
ºSPLITS:                                  º
ºPHASE  1)  0%   2) 33%   3) 25%   4) 42%º
ºPHASE  5)  0%   6)  0%   7)  0%   8) 67%º
ºPHASE  9)  0%  10)  0%  11)  0%  12)  0%º
º                                         º
ºVEH PERMISSIVE.......  [1]   0% [2]   0%º
ºVEH PERM 2 DISP.....   0%                 º
ºPHASE RESERVICE.....   .                  º
ºSPLIT EXTENSION/RING.  [1]   0% [2]   0%º
ºSPL DMD PATTERN......  [1]   0  [2]   0 º
ºXARTERY PATTERN.....   0                  º
ºADDITIONAL SCREEN(S)                     º
ÈÍÍÍÍÍÍÍÍÍÍÍÍÍÍÍÍÍÍÍÍÍÍÍÍÍÍÍÍÍÍÍÍÍÍÍÍÍÍ¼

ÉÍÍÍÍÍÍÍÍÍÍÍÍÍÍÍÍÍÍÍÍÍÍÍÍÍÍÍÍÍÍÍÍÍÍÍÍÍÍ»
º                                 1 1 1º
ºPHASE            1 2 3 4 5 6 7 8 9 0 1 2º
ºCOORD PHASES     . . . X . . . X . . . .º
ºVEHICLE RECALL   . . . . . . . . . . . .º
ºVEH MAX RECALL   . . . . . . . . . . . .º
ºPED RECALL       . . . . . . . . . . . .º
ºPHASE OMIT       . . . . . . . . . . . .º
ºSPARE            . . . . . . . . . . . .º
º                                         º
º                 A B C D E F             º
ºALT SEQUENCE:    X . . . . .             º
º                                         º
º                                         º
```

```
º                                          º
º                                          º
ºADDITIONAL SCREEN(S)                      º
ÈÍÍÍÍÍÍÍÍÍÍÍÍÍÍÍÍÍÍÍÍÍÍÍÍÍÍÍÍÍÍÍÍÍÍÍÍÍÍ¼

ÉÍÍÍÍÍÍÍÍÍÍÍÍÍÍÍÍÍÍÍÍÍÍÍÍÍÍÍÍÍÍÍÍÍÍÍÍÍÍ»
ºCOORD PATTERN 51                          º
º                                          º
ºCYCLE LENGTH..... 100s  C/O/S.....  411 º
ºOFFSET...........  28%                    º
ºSPLITS:                                   º
ºPHASE  1)  0%   2) 27%   3) 20%   4) 53%º
ºPHASE  5)  0%   6)  0%   7)  0%   8) 73%º
ºPHASE  9)  0%  10)  0%  11)  0%  12)  0%º
º                                          º
ºVEH PERMISSIVE.......  [1]   0% [2]   0%º
ºVEH PERM 2 DISP...........   0%          º
ºPHASE RESERVICE...........   .           º
ºSPLIT EXTENSION/RING.  [1]   0% [2]   0%º
ºSPL DMD PATTERN......  [1]   0  [2]   0 º
ºXARTERY PATTERN...........   0           º
ºADDITIONAL SCREEN(S)                      º
ÈÍÍÍÍÍÍÍÍÍÍÍÍÍÍÍÍÍÍÍÍÍÍÍÍÍÍÍÍÍÍÍÍÍÍÍÍÍÍ¼

ÉÍÍÍÍÍÍÍÍÍÍÍÍÍÍÍÍÍÍÍÍÍÍÍÍÍÍÍÍÍÍÍÍÍÍÍÍÍÍ»
º                                  1 1 1   º
ºPHASE            1 2 3 4 5 6 7 8 9 0 1 2º
ºCOORD PHASES     . . . X . . . X . . . .º
ºVEHICLE RECALL   . . . . . . . . . . . .º
ºVEH MAX RECALL   . . . . . . . . . . . .º
ºPED RECALL       . . . . . . . . . . . .º
ºPHASE OMIT       . . . . . . . . . . . .º
ºSPARE            . . . . . . . . . . . .º
º                                          º
º                 A B C D E F              º
ºALT SEQUENCE:    X . . . . .              º
º                                          º
º                                          º
º                                          º
º                                          º
ºADDITIONAL SCREEN(S)                      º
ÈÍÍÍÍÍÍÍÍÍÍÍÍÍÍÍÍÍÍÍÍÍÍÍÍÍÍÍÍÍÍÍÍÍÍÍÍÍÍ¼

ÉÍÍÍÍÍÍÍÍÍÍÍÍÍÍÍÍÍÍÍÍÍÍÍÍÍÍÍÍÍÍÍÍÍÍÍÍÍÍ»
ºCOORD PATTERN 53                          º
º                                          º
ºCYCLE LENGTH..... 100s  C/O/S.....  611 º
ºOFFSET...........  36%                    º
ºSPLITS:                                   º
ºPHASE  1)  0%   2) 33%   3) 25%   4) 42%º
ºPHASE  5)  0%   6)  0%   7)  0%   8) 67%º
ºPHASE  9)  0%  10)  0%  11)  0%  12)  0%º
º                                          º
ºVEH PERMISSIVE.......  [1]   0% [2]   0%º
ºVEH PERM 2 DISP...........   0%          º
ºPHASE RESERVICE...........   .           º
ºSPLIT EXTENSION/RING.  [1]   0% [2]   0%º
ºSPL DMD PATTERN......  [1]   0  [2]   0 º
ºXARTERY PATTERN...........   0           º
ºADDITIONAL SCREEN(S)                      º
ÈÍÍÍÍÍÍÍÍÍÍÍÍÍÍÍÍÍÍÍÍÍÍÍÍÍÍÍÍÍÍÍÍÍÍÍÍÍÍ¼

ÉÍÍÍÍÍÍÍÍÍÍÍÍÍÍÍÍÍÍÍÍÍÍÍÍÍÍÍÍÍÍÍÍÍÍÍÍÍÍ»
```

```
º                                    1 1 1º
ºPHASE            1 2 3 4 5 6 7 8 9 0 1 2º
ºCOORD PHASES     . . . X . . . X . . . .º
ºVEHICLE RECALL   . . . . . . . . . . . .º
ºVEH MAX RECALL   . . . . . . . . . . . .º
ºPED RECALL       . . . . . . . . . . . .º
ºPHASE OMIT       . . . . . . . . . . . .º
ºSPARE            . . . . . . . . . . . .º
º                                        º
º                 A B C D E F            º
ºALT SEQUENCE:    X . . . . .            º
º                                        º
º                                        º
º                                        º
º                                        º
ºADDITIONAL SCREEN(S)                    º
ÈÍÍÍÍÍÍÍÍÍÍÍÍÍÍÍÍÍÍÍÍÍÍÍÍÍÍÍÍÍÍÍÍÍÍÍÍÍÍÍÍÍÍ¼

ÉÍÍÍÍÍÍÍÍÍÍÍÍÍÍÍÍÍÍÍÍÍÍÍÍÍÍÍÍÍÍÍÍÍÍÍÍÍÍÍÍÍÍ»
º****************************************º
º*   ECONOLITE CONTROL PRODUCTS, INC.   *º
º*            ASC/2-2000                *º
º*          Copyright (C) 1992          *º
º*                                      *º
º* City of Ontario, T MffdM Engineering *º
º*  ASC/2-2M0MM Co figuratiMODMer m1.1  *º
º*                                      *º
º*   SOFTWARE ASSY             VERSION  *º
º*   BOOT            32783        1.25  *º
º*   MAIN PROGRAM    32787        1.59  *º
º*   HELP            32789        1.48  *º
º*   CONFIGURATION   32790       C8145  *º
º*                                      *º
º*                                      *º
º****************************************º
ÈÍÍÍÍÍÍÍÍÍÍÍÍÍÍÍÍÍÍÍÍÍÍÍÍÍÍÍÍÍÍÍÍÍÍÍÍÍÍÍÍÍÍ¼

ÉÍÍÍÍÍÍÍÍÍÍÍÍÍÍÍÍÍÍÍÍÍÍÍÍÍÍÍÍÍÍÍÍÍÍÍÍÍÍÍÍÍÍ»
ºPRIORITY PREEMPTOR 1                1 1 1º
ºPHASE.........  1 2 3 4 5 6 7 8 9 0 1 2º
ºTERM PHASE OVLP  . . . . . . . . . . . .º
ºTRK CLR PHASE..  . . . . . . . . . . . .º
ºHOLD PHASES....  . . . . . . . . . . . .º
ºEXIT PHASES....  . . . . . . . . . . . .º
ºEXIT CALLS.....  . . . . . . . . . . . .º
ºSPARE.........  . . . . . . . . . . . .º
ºTERM OVERLAP...   A: .  B: .  C: .  D: .º
º                                        º
ºACTIVE......... NO  PED DARK....... NO  º
ºPRIORITY....... NO  PED ACTIVE..... NO  º
ºDET LOCK....... NO  ZERO PC TIME... NO  º
ºHOLD FLASH..... NO  PC THRU YELLOW. NO  º
ºTERM OVLP ASAP. NO  TERM PHASES.... NO  º
ºADDITIONAL PAGE(S)                      º
ÈÍÍÍÍÍÍÍÍÍÍÍÍÍÍÍÍÍÍÍÍÍÍÍÍÍÍÍÍÍÍÍÍÍÍÍÍÍÍÍÍÍÍ¼

ÉÍÍÍÍÍÍÍÍÍÍÍÍÍÍÍÍÍÍÍÍÍÍÍÍÍÍÍÍÍÍÍÍÍÍÍÍÍÍÍÍÍÍ»
º          PRIORITY PREEMPTOR 1          º
º                                        º
ºDON'T OVERRIDE FLASH.....  .            º
ºFLASH ALL OUTPUTS........  .            º
ºYELLOW-RED GOES GREEN....  .            º
ºENABLE MAX PREEMPT TIME..  .            º
```

```
ºACTIVE ONLY DURING HOLD..  .            º
ºNO CVM IN FLASH.........  .            º
ºFAST FLASH GRN ON HOLD...  .            º
ºOUT OF FLASH.............  GREEN        º
º                                        º
º                                        º
º                                        º
º                                        º
º                                        º
ºADDITIONAL PAGE(S)                      º
ÈÍÍÍÍÍÍÍÍÍÍÍÍÍÍÍÍÍÍÍÍÍÍÍÍÍÍÍÍÍÍÍÍÍÍÍÍÍÍ¼

ÉÍÍÍÍÍÍÍÍÍÍÍÍÍÍÍÍÍÍÍÍÍÍÍÍÍÍÍÍÍÍÍÍÍÍÍÍÍÍ»
º          PRIORITY PREEMPTOR 1          º
º                                        º
ºMAX TIME......  0  DURATION TIME..  0    º
ºMIN HOLD TIME.  0  DELAY TIME.....  0    º
ºMIN PED CLEAR.  0  INHIBIT TIME...  0    º
ºEXIT MAX......  0  HLD DELAY TIME.  0    º
º                                        º
º                GRN  YEL  RED           º
ºMINIMUM.......    0  0.0  0.0           º
ºTRACK CLEAR...    0  0.0  0.0           º
ºHOLD..........       0.0  0.0           º
º                                        º
º                                        º
º                                        º
º                                        º
ºEND OF SUBMENU                          º
ÈÍÍÍÍÍÍÍÍÍÍÍÍÍÍÍÍÍÍÍÍÍÍÍÍÍÍÍÍÍÍÍÍÍÍÍÍÍÍ¼

ÉÍÍÍÍÍÍÍÍÍÍÍÍÍÍÍÍÍÍÍÍÍÍÍÍÍÍÍÍÍÍÍÍÍÍÍÍÍÍ»
ºPRIORITY PREEMPTOR 2              1 1 1º
ºPHASE.........  1 2 3 4 5 6 7 8 9 0 1 2º
ºTERM PHASE OVLP  . . . . . . . . . . . .º
ºTRK CLR PHASE..  . . . . . . . . . . . .º
ºHOLD PHASES....  . . . . . . . . . . . .º
ºEXIT PHASES....  . . . . . . . . . . . .º
ºEXIT CALLS.....  . . . . . . . . . . . .º
ºSPARE..........  . . . . . . . . . . . .º
ºTERM OVERLAP...   A: .  B: .  C: .  D: .º
º                                        º
ºACTIVE......... NO  PED DARK....... NO  º
ºPRIORITY....... NO  PED ACTIVE..... NO  º
ºDET LOCK....... NO  ZERO PC TIME... NO  º
ºHOLD FLASH..... NO  PC THRU YELLOW. NO  º
ºTERM OVLP ASAP. NO  TERM PHASES.... NO  º
ºADDITIONAL PAGE(S)                      º
ÈÍÍÍÍÍÍÍÍÍÍÍÍÍÍÍÍÍÍÍÍÍÍÍÍÍÍÍÍÍÍÍÍÍÍÍÍÍÍ¼

ÉÍÍÍÍÍÍÍÍÍÍÍÍÍÍÍÍÍÍÍÍÍÍÍÍÍÍÍÍÍÍÍÍÍÍÍÍÍÍ»
º          PRIORITY PREEMPTOR 2          º
º                                        º
ºDON'T OVERRIDE FLASH.....  .            º
ºFLASH ALL OUTPUTS........  .            º
ºYELLOW-RED GOES GREEN....  .            º
ºENABLE MAX PREEMPT TIME..  .            º
ºACTIVE ONLY DURING HOLD..  .            º
ºNO CVM IN FLASH.........  .             º
ºFAST FLASH GRN ON HOLD...  .            º
ºOUT OF FLASH.............  GREEN        º
º                                        º
º                                        º
```

```
º                                        º
º                                        º
º                                        º
ºADDITIONAL PAGE(S)                      º
ÈÍÍÍÍÍÍÍÍÍÍÍÍÍÍÍÍÍÍÍÍÍÍÍÍÍÍÍÍÍÍÍÍÍÍÍÍ¼

ÉÍÍÍÍÍÍÍÍÍÍÍÍÍÍÍÍÍÍÍÍÍÍÍÍÍÍÍÍÍÍÍÍÍÍÍÍ»
º          PRIORITY PREEMPTOR 2          º
º                                        º
ºMAX TIME......  0  DURATION TIME..  0    º
ºMIN HOLD TIME.  0  DELAY TIME.....  0    º
ºMIN PED CLEAR.  0  INHIBIT TIME...  0    º
ºEXIT MAX......  0  HLD DELAY TIME.  0    º
º                                        º
º                GRN  YEL  RED           º
ºMINIMUM.......    0  0.0  0.0           º
ºTRACK CLEAR...    0  0.0  0.0           º
ºHOLD..........       0.0  0.0           º
º                                        º
ºLINKED PREEMPTOR.....  0                º
º                                        º
º                                        º
ºEND OF SUBMENU                          º
ÈÍÍÍÍÍÍÍÍÍÍÍÍÍÍÍÍÍÍÍÍÍÍÍÍÍÍÍÍÍÍÍÍÍÍÍÍ¼

ÉÍÍÍÍÍÍÍÍÍÍÍÍÍÍÍÍÍÍÍÍÍÍÍÍÍÍÍÍÍÍÍÍÍÍÍÍ»
ºPRIORITY PREEMPTOR 3              1 1 1º
ºPHASE..........  1 2 3 4 5 6 7 8 9 0 1 2º
ºTERM PHASE OVLP  . . . . . . . . . . . .º
ºTRK CLR PHASE..  . . . . . . . . . . . .º
ºHOLD PHASES....  . X . . . . . . . . . .º
ºEXIT PHASES....  . . . . . . . . . . . .º
ºEXIT CALLS.....  . . . . . . . . . . . .º
ºSPARE..........  . . . . . . . . . . . .º
ºTERM OVERLAP...   A: .  B: .  C: .  D: .º
º                                        º
ºACTIVE.........YES  PED DARK....... NO  º
ºPRIORITY....... NO  PED ACTIVE..... NO  º
ºDET LOCK....... NO  ZERO PC TIME... NO  º
ºHOLD FLASH..... NO  PC THRU YELLOW. NO  º
ºTERM OVLP ASAP. NO  TERM PHASES.... NO  º
ºADDITIONAL PAGE(S)                      º
ÈÍÍÍÍÍÍÍÍÍÍÍÍÍÍÍÍÍÍÍÍÍÍÍÍÍÍÍÍÍÍÍÍÍÍÍÍ¼

ÉÍÍÍÍÍÍÍÍÍÍÍÍÍÍÍÍÍÍÍÍÍÍÍÍÍÍÍÍÍÍÍÍÍÍÍÍ»
º          PRIORITY PREEMPTOR 3          º
º                                        º
ºDON'T OVERRIDE FLASH.....  X            º
ºFLASH ALL OUTPUTS........  .            º
ºYELLOW-RED GOES GREEN....  X            º
ºENABLE MAX PREEMPT TIME..  X            º
ºACTIVE ONLY DURING HOLD..  .            º
ºNO CVM IN FLASH..........  .            º
ºFAST FLASH GRN ON HOLD...  X            º
ºOUT OF FLASH.............  GREEN        º
º                                        º
º                                        º
º                                        º
º                                        º
º                                        º
ºADDITIONAL PAGE(S)                      º
ÈÍÍÍÍÍÍÍÍÍÍÍÍÍÍÍÍÍÍÍÍÍÍÍÍÍÍÍÍÍÍÍÍÍÍÍÍ¼
```

```
É͸͸͸͸͸͸͸͸͸͸͸͸͸͸͸͸͸͸͸͸͸͸͸͸͸͸͸͸͸͸͸͸͸͸͸͸͸»
º          PRIORITY PREEMPTOR 3          º
º                                        º
ºMAX TIME...... 90  DURATION TIME..  0   º
ºMIN HOLD TIME.  0  DELAY TIME.....  0   º
ºMIN PED CLEAR.  0  INHIBIT TIME...  0   º
ºEXIT MAX......  0  HLD DELAY TIME.  0   º
º                                        º
º                GRN  YEL  RED           º
ºMINIMUM.......    0  0.0  0.0           º
ºTRACK CLEAR...    0  0.0  0.0           º
ºHOLD..........       0.0  0.0           º
º                                        º
ºLINKED PREEMPTOR.....  0                º
º                                        º
º                                        º
ºEND OF SUBMENU                          º
È͸͸͸͸͸͸͸͸͸͸͸͸͸͸͸͸͸͸͸͸͸͸͸͸͸͸͸͸͸͸͸͸͸͸͸͸͸¼

É͸͸͸͸͸͸͸͸͸͸͸͸͸͸͸͸͸͸͸͸͸͸͸͸͸͸͸͸͸͸͸͸͸͸͸͸͸»
º          PRIORITY PREEMPTOR 4     1 1 1º
ºPHASE.........  1 2 3 4 5 6 7 8 9 0 1 2º
ºTERM PHASE OVLP  . . . . . . . . . . . .º
ºTRK CLR PHASE..  . . . . . . . . . . . .º
ºHOLD PHASES....  . . . . . . . . . . . .º
ºEXIT PHASES....  . . . . . . . . . . . .º
ºEXIT CALLS.....  . . . . . . . . . . . .º
ºSPARE.........  . . . . . . . . . . . .º
ºTERM OVERLAP...   A: .  B: .  C: .  D: .º
º                                        º
ºACTIVE......... NO  PED DARK....... NO  º
ºPRIORITY....... NO  PED ACTIVE..... NO  º
ºDET LOCK....... NO  ZERO PC TIME... NO  º
ºHOLD FLASH..... NO  PC THRU YELLOW. NO  º
ºTERM OVLP ASAP. NO  TERM PHASES.... NO  º
ºADDITIONAL PAGE(S)                      º
È͸͸͸͸͸͸͸͸͸͸͸͸͸͸͸͸͸͸͸͸͸͸͸͸͸͸͸͸͸͸͸͸͸͸͸͸͸¼

É͸͸͸͸͸͸͸͸͸͸͸͸͸͸͸͸͸͸͸͸͸͸͸͸͸͸͸͸͸͸͸͸͸͸͸͸͸»
º          PRIORITY PREEMPTOR 4          º
º                                        º
ºDON'T OVERRIDE FLASH.....  .            º
ºFLASH ALL OUTPUTS........  .            º
ºYELLOW-RED GOES GREEN....  .            º
ºENABLE MAX PREEMPT TIME..  .            º
ºACTIVE ONLY DURING HOLD..  .            º
ºNO CVM IN FLASH..........  .            º
ºFAST FLASH GRN ON HOLD...  .            º
ºOUT OF FLASH.............  GREEN        º
º                                        º
º                                        º
º                                        º
º                                        º
º                                        º
ºADDITIONAL PAGE(S)                      º
È͸͸͸͸͸͸͸͸͸͸͸͸͸͸͸͸͸͸͸͸͸͸͸͸͸͸͸͸͸͸͸͸͸͸͸͸͸¼

♀

É͸͸͸͸͸͸͸͸͸͸͸͸͸͸͸͸͸͸͸͸͸͸͸͸͸͸͸͸͸͸͸͸͸͸͸͸͸»
º          PRIORITY PREEMPTOR 4          º
º                                        º
ºMAX TIME......  0  DURATION TIME..  0   º
ºMIN HOLD TIME.  0  DELAY TIME.....  0   º
ºMIN PED CLEAR.  0  INHIBIT TIME...  0   º
```

```
ºEXIT MAX......  0  HLD DELAY TIME.  0   º
º                                        º
º                GRN  YEL  RED           º
ºMINIMUM.......    0  0.0  0.0           º
ºTRACK CLEAR...    0  0.0  0.0           º
ºHOLD..........       0.0  0.0           º
º                                        º
ºLINKED PREEMPTOR.....  0                º
º                                        º
º                                        º
ºEND OF SUBMENU                          º
ÈÍÍÍÍÍÍÍÍÍÍÍÍÍÍÍÍÍÍÍÍÍÍÍÍÍÍÍÍÍÍÍÍÍÍÍÍÍÍ¼

ÉÍÍÍÍÍÍÍÍÍÍÍÍÍÍÍÍÍÍÍÍÍÍÍÍÍÍÍÍÍÍÍÍÍÍÍÍÍÍ»
ºPRIORITY PREEMPTOR 5                1 1 1º
ºPHASE..........  1 2 3 4 5 6 7 8 9 0 1 2º
ºTERM PHASE OVLP  . . . . . . . . . . . .º
ºTRK CLR PHASE..  . . . . . . . . . . . .º
ºHOLD PHASES....  . . . X . . . . . . . .º
ºEXIT PHASES....  . . . . . . . . . . . .º
ºEXIT CALLS.....  . . . . . . . . . . . .º
ºSPARE..........  . . . . . . . . . . . .º
ºTERM OVERLAP...   A: .  B: .  C: .  D: .º
º                                        º
ºACTIVE.........YES  PED DARK....... NO  º
ºPRIORITY....... NO  PED ACTIVE..... NO  º
ºDET LOCK....... NO  ZERO PC TIME... NO  º
ºHOLD FLASH..... NO  PC THRU YELLOW. NO  º
ºTERM OVLP ASAP. NO  TERM PHASES.... NO  º
ºADDITIONAL PAGE(S)                      º
ÈÍÍÍÍÍÍÍÍÍÍÍÍÍÍÍÍÍÍÍÍÍÍÍÍÍÍÍÍÍÍÍÍÍÍÍÍÍÍ¼

ÉÍÍÍÍÍÍÍÍÍÍÍÍÍÍÍÍÍÍÍÍÍÍÍÍÍÍÍÍÍÍÍÍÍÍÍÍÍÍ»
º          PRIORITY PREEMPTOR 5          º
º                                        º
ºDON'T OVERRIDE FLASH.....  X            º
ºFLASH ALL OUTPUTS........  .            º
ºYELLOW-RED GOES GREEN....  X            º
ºENABLE MAX PREEMPT TIME..  X            º
ºACTIVE ONLY DURING HOLD..  .            º
ºNO CVM IN FLASH..........  .            º
ºFAST FLASH GRN ON HOLD...  X            º
ºOUT OF FLASH.............  GREEN        º
º                                        º
º                                        º
º                                        º
º                                        º
º                                        º
ºADDITIONAL PAGE(S)                      º
ÈÍÍÍÍÍÍÍÍÍÍÍÍÍÍÍÍÍÍÍÍÍÍÍÍÍÍÍÍÍÍÍÍÍÍÍÍÍÍ¼

ÉÍÍÍÍÍÍÍÍÍÍÍÍÍÍÍÍÍÍÍÍÍÍÍÍÍÍÍÍÍÍÍÍÍÍÍÍÍÍ»
º          PRIORITY PREEMPTOR 5          º
º                                        º
ºMAX TIME...... 90  DURATION TIME..  0   º
ºMIN HOLD TIME.  0  DELAY TIME.....  0   º
ºMIN PED CLEAR.  5  INHIBIT TIME...  0   º
ºEXIT MAX......  0  HLD DELAY TIME.  0   º
º                                        º
º                GRN  YEL  RED           º
ºMINIMUM.......    0  0.0  0.0           º
ºTRACK CLEAR...    0  0.0  0.0           º
ºHOLD..........       0.0  0.0           º
```

```
º                                                  º
ºLINKED PREEMPTOR.....  0                          º
º                                                  º
º                                                  º
ºEND OF SUBMENU                                    º
ÈÍÍÍÍÍÍÍÍÍÍÍÍÍÍÍÍÍÍÍÍÍÍÍÍÍÍÍÍÍÍÍÍÍÍÍÍÍÍÍÍÍÍ¼

ÉÍÍÍÍÍÍÍÍÍÍÍÍÍÍÍÍÍÍÍÍÍÍÍÍÍÍÍÍÍÍÍÍÍÍÍÍÍÍÍÍÍÍ»
ºPRIORITY PREEMPTOR 6                    1 1 1º
ºPHASE.....  1 2 3 4 5 6 7 8 9 0 1 2º
ºTERM PHASE OVLP  . . . . . .º
ºTRK CLR PHASE..  . . . . . .º
ºHOLD PHASES....  . . X . . . . X . . . .º
ºEXIT PHASES....  . . . . . .º
ºEXIT CALLS.....  . . . . . .º
ºSPARE.....  . . . . . .º
ºTERM OVERLAP...   A: .  B: .  C: .  D: .º
º                                                  º
ºACTIVE.....YES  PED DARK....... NO  º
ºPRIORITY....... NO  PED ACTIVE..... NO  º
ºDET LOCK....... NO  ZERO PC TIME... NO  º
ºHOLD FLASH..... NO  PC THRU YELLOW. NO  º
ºTERM OVLP ASAP. NO  TERM PHASES.... NO  º
ºADDITIONAL PAGE(S)                                º
ÈÍÍÍÍÍÍÍÍÍÍÍÍÍÍÍÍÍÍÍÍÍÍÍÍÍÍÍÍÍÍÍÍÍÍÍÍÍÍÍÍÍÍ¼

ÉÍÍÍÍÍÍÍÍÍÍÍÍÍÍÍÍÍÍÍÍÍÍÍÍÍÍÍÍÍÍÍÍÍÍÍÍÍÍÍÍÍÍ»
º          PRIORITY PREEMPTOR 6                    º
º                                                  º
ºDON'T OVERRIDE FLASH.....  X                      º
ºFLASH ALL OUTPUTS........  .                      º
ºYELLOW-RED GOES GREEN....  X                      º
ºENABLE MAX PREEMPT TIME..  X                      º
ºACTIVE ONLY DURING HOLD..  .                      º
ºNO CVM IN FLASH..........  .                      º
ºFAST FLASH GRN ON HOLD...  X                      º
ºOUT OF FLASH.............  GREEN                  º
º                                                  º
º                                                  º
º                                                  º
º                                                  º
º                                                  º
ºADDITIONAL PAGE(S)                                º
ÈÍÍÍÍÍÍÍÍÍÍÍÍÍÍÍÍÍÍÍÍÍÍÍÍÍÍÍÍÍÍÍÍÍÍÍÍÍÍÍÍÍÍ¼

ÉÍÍÍÍÍÍÍÍÍÍÍÍÍÍÍÍÍÍÍÍÍÍÍÍÍÍÍÍÍÍÍÍÍÍÍÍÍÍÍÍÍÍ»
º          PRIORITY PREEMPTOR 6                    º
º                                                  º
ºMAX TIME..... 90  DURATION TIME..  0   º
ºMIN HOLD TIME.  0  DELAY TIME.....  0   º
ºMIN PED CLEAR.  0  INHIBIT TIME...  0   º
ºEXIT MAX.....  0  HLD DELAY TIME.  0   º
º                                                  º
º                GRN  YEL  RED                     º
ºMINIMUM.......    0  0.0  0.0                     º
ºTRACK CLEAR...    0  0.0  0.0                     º
ºHOLD..........       0.0  0.0                     º
º                                                  º
ºLINKED PREEMPTOR.....  0                          º
º                                                  º
º                                                  º
ºEND OF SUBMENU                                    º
ÈÍÍÍÍÍÍÍÍÍÍÍÍÍÍÍÍÍÍÍÍÍÍÍÍÍÍÍÍÍÍÍÍÍÍÍÍÍÍÍÍÍÍ¼
```

```
É͸͸͸͸͸͸͸͸͸͸͸͸͸͸͸͸͸͸͸͸͸͸͸͸͸͸͸͸͸͸͸͸͸͸͸͸͸»
º              BUS PREEMPTOR                          º
º                                                     º
º                     - BUS PREEMPTOR -               º
º                      1    2    3    4               º
ºPREEMPTOR ACTIVE.     .    .    .    .               º
ºDETECTOR LOCK....     .    .    .    .               º
ºMAXIMUM TIME.....     0    0    0    0               º
ºRESERVICE TIME...     0    0    0    0               º
ºDELAY TIME.......     0    0    0    0               º
ºINHIBIT TIME.....     0    0    0    0               º
ºENTRANCE GREEN...     0    0    0    0               º
ºENTRANCE PED CLR.     0    0    0    0               º
ºENTRANCE YELLOW..   0.0  0.0  0.0  0.0               º
ºENTRANCE RED.....   0.0  0.0  0.0  0.0               º
ºMIN HOLD TIME....     0    0    0    0               º
ºADDITIONAL PAGE(S)                                   º
È͸͸͸͸͸͸͸͸͸͸͸͸͸͸͸͸͸͸͸͸͸͸͸͸͸͸͸͸͸͸͸͸͸͸͸͸͸¼

É͸͸͸͸͸͸͸͸͸͸͸͸͸͸͸͸͸͸͸͸͸͸͸͸͸͸͸͸͸͸͸͸͸͸͸͸͸»
º              BUS PREEMPTOR                          º
º                                                     º
º                  ------ HOLD PHASE -----º
º                                        1 1 1º
º                  1 2 3 4 5 6 7 8 9 0 1 2º
ºPREEMPTOR 1....  . . . . . . . . . . . . .º
ºPREEMPTOR 2....  . . . . . . . . . . . . .º
ºPREEMPTOR 3....  . . . . . . . . . . . . .º
ºPREEMPTOR 4....  . . . . . . . . . . . . .º
º                                                     º
º                                                     º
º                                                     º
º                                                     º
º                                                     º
º                                                     º
ºEND OF SUBMENU                                       º
È͸͸͸͸͸͸͸͸͸͸͸͸͸͸͸͸͸͸͸͸͸͸͸͸͸͸͸͸͸͸͸͸͸͸͸͸͸¼

É͸͸͸͸͸͸͸͸͸͸͸͸͸͸͸͸͸͸͸͸͸͸͸͸͸͸͸͸͸͸͸͸͸͸͸͸͸»
º*****************************************º
º*   ECONOLITE CONTROL PRODUCTS, INC.    *º
º*             ASC/2-2000                *º
º*          Copyright (C) 1992           *º
º*                                       *º
º* City of Ontario, T MffdM Engineering *º
º*  ASC/2-2M0MM Co figuratiMODMer m1.1   *º
º*                                       *º
º*   SOFTWARE ASSY             VERSION   *º
º*   BOOT            32783        1.25   *º
º*   MAIN PROGRAM    32787        1.59   *º
º*   HELP            32789        1.48   *º
º*   CONFIGURATION   32790       C8145   *º
º*                                       *º
º*                                       *º
º*****************************************º
È͸͸͸͸͸͸͸͸͸͸͸͸͸͸͸͸͸͸͸͸͸͸͸͸͸͸͸͸͸͸͸͸͸͸͸͸͸¼

É͸͸͸͸͸͸͸͸͸͸͸͸͸͸͸͸͸͸͸͸͸͸͸͸͸͸͸͸͸͸͸͸͸͸͸͸͸»
º       NIC/TOD CLOCK/CALENDAR DATA                   º
º                                                     º
º                                                     º
ºDATE SET:  2/22/18  | ENTER DATE/TIME                º
```

```
ºTIME SET:  8:00:40  | THEN PRESS ENTER  º
º                                       º
ºMANUAL NIC PROGRAM STEP    0           º
ºMANUAL TOD PROGRAM STEP    0           º
º                                       º
ºSYNC REFERENCE TIME    0:00            º
ºSYNC REFERENCE.........REFERENCE TIME  º
º                                       º
ºWEEK 1 BEGINS ON 1ST SUNDAY  .         º
ºDISABLE DAYLIGHT SAVINGS     .         º
ºDST BEGINS LAST SUNDAY       .         º
ºEND OF SUBMENU                         º
ÈÍÍÍÍÍÍÍÍÍÍÍÍÍÍÍÍÍÍÍÍÍÍÍÍÍÍÍÍÍÍÍÍÍÍÍÍÍÍ¼

ÉÍÍÍÍÍÍÍÍÍÍÍÍÍÍÍÍÍÍÍÍÍÍÍÍÍÍÍÍÍÍÍÍÍÍÍÍÍÍ»
º         NIC/TOD WEEKLY PROGRAMS       º
ºWEEK  SUN  MON  TUE  WED  THU  FRI  SAT º
º  1    2    1    1    1    1    1    2  º
º  2    2    1    1    1    1    1    2  º
º  3    2    1    1    1    1    1    2  º
º  4    2    1    1    1    1    1    2  º
º  5    2    1    1    1    1    1    2  º
º  6    2    1    1    1    1    1    2  º
º  7    2    1    1    1    1    1    2  º
º  8    2    1    1    1    1    1    2  º
º  9    2    1    1    1    1    1    2  º
º 10    2    1    1    1    1    1    2  º
º                                       º
º                                       º
º                                       º
ºEND OF SUBMENU                         º
ÈÍÍÍÍÍÍÍÍÍÍÍÍÍÍÍÍÍÍÍÍÍÍÍÍÍÍÍÍÍÍÍÍÍÍÍÍÍÍ¼

♀
ÉÍÍÍÍÍÍÍÍÍÍÍÍÍÍÍÍÍÍÍÍÍÍÍÍÍÍÍÍÍÍÍÍÍÍÍÍÍÍ»
º         NIC/TOD YEARLY PROGRAM        º
ºWEEK OF YEAR      1  2  3  4  5  6  7  8º
ºWEEKLY PROGRAM    1  1  1  1  1  1  1  1º
º                                       º
ºWEEK OF YEAR      9 10 11 12 13 14 15 16º
ºWEEKLY PROGRAM    1  1  1  1  1  1  1  1º
º                                       º
ºWEEK OF YEAR     17 18 19 20 21 22 23 24º
ºWEEKLY PROGRAM    1  1  1  1  1  1  1  1º
º                                       º
ºWEEK OF YEAR     25 26 27 28 29 30 31 32º
ºWEEKLY PROGRAM    1  1  1  1  1  1  1  1º
º                                       º
ºWEEK OF YEAR     33 34 35 36 37 38 39 40º
ºWEEKLY PROGRAM    1  1  1  1  1  1  1  1º
ºADDITIONAL SCREEN(S)                   º
ÈÍÍÍÍÍÍÍÍÍÍÍÍÍÍÍÍÍÍÍÍÍÍÍÍÍÍÍÍÍÍÍÍÍÍÍÍÍÍ¼

ÉÍÍÍÍÍÍÍÍÍÍÍÍÍÍÍÍÍÍÍÍÍÍÍÍÍÍÍÍÍÍÍÍÍÍÍÍÍÍ»
º         NIC/TOD YEARLY PROGRAM        º
º                                       º
ºWEEK OF YEAR     41 42 43 44 45 46 47 48º
ºWEEKLY PROGRAM    1  1  1  1  1  1  1  1º
º                                       º
ºWEEK OF YEAR              49 50 51 52 53º
ºWEEKLY PROGRAM             1  1  1  1  1º
º                                       º
º                                       º
º                                       º
```

HOLIDAY	NIC/TOD FLOAT/ FIXED	HOLIDAY PROGRAM MON/ MON	DOW/ DOM	WOM/ YEAR	PROG
1	FIXED	9	3	2002	2
2	FIXED	9	4	2002	2
3	FIXED	9	5	2002	2
4	FIXED	9	6	2002	2
5	FIXED	0	0	0	0
6	FIXED	0	0	0	0
7	FIXED	0	0	0	0
8	FIXED	0	0	0	0
9	FIXED	0	0	0	0
10	FIXED	0	0	0	0
11	FIXED	0	0	0	0
12	FIXED	0	0	0	0

ADDITIONAL SCREEN(S)

HOLIDAY	NIC/TOD FLOAT/ FIXED	HOLIDAY PROGRAM MON/ MON	DOW/ DOM	WOM/ YEAR	PROG
13	FIXED	0	0	0	0
14	FIXED	0	0	0	0
15	FIXED	0	0	0	0
16	FIXED	0	0	0	0
17	FIXED	0	0	0	0
18	FIXED	0	0	0	0
19	FIXED	0	0	0	0
20	FIXED	0	0	0	0
21	FIXED	0	0	0	0
22	FIXED	0	0	0	0
23	FIXED	0	0	0	0
24	FIXED	0	0	0	0

ADDITIONAL SCREEN(S)

HOLIDAY	NIC/TOD FLOAT/ FIXED	HOLIDAY PROGRAM MON/ MON	DOW/ DOM	WOM/ YEAR	PROG
25	FIXED	0	0	0	0
26	FIXED	0	0	0	0
27	FIXED	0	0	0	0
28	FIXED	0	0	0	0
29	FIXED	0	0	0	0
30	FIXED	0	0	0	0
31	FIXED	0	0	0	0
32	FIXED	0	0	0	0
33	FIXED	0	0	0	0
34	FIXED	0	0	0	0
35	FIXED	0	0	0	0
36	FIXED	0	0	0	0

END OF SUBMENU

```
ÈÍÍÍÍÍÍÍÍÍÍÍÍÍÍÍÍÍÍÍÍÍÍÍÍÍÍÍÍÍÍÍÍÍÍÍÍÍÍÍÍÍÍÍÍÍ¼

ÉÍÍÍÍÍÍÍÍÍÍÍÍÍÍÍÍÍÍÍÍÍÍÍÍÍÍÍÍÍÍÍÍÍÍÍÍÍÍÍÍÍÍÍÍÍ»
º        NIC PROGRAM STEP                               º
º                                                       º
ºSTEP  PGM TIME PATTERN OVERRIDE                        º
º  1    1  6:00   51       X                           º
º  2    1  9:00    0       X                           º
º  3    1 15:00   53       X                           º
º  4    1 19:00    0       X                           º
º  5    0  0:00    0       .                           º
º  6    0  0:00    0       .                           º
º  7    0  0:00    0       .                           º
º  8    0  0:00    0       .                           º
º  9    0  0:00    0       .                           º
º 10    0  0:00    0       .                           º
º 11    0  0:00    0       .                           º
º 12    0  0:00    0       .                           º
ºADDITIONAL SCREEN(S)                                   º
ÈÍÍÍÍÍÍÍÍÍÍÍÍÍÍÍÍÍÍÍÍÍÍÍÍÍÍÍÍÍÍÍÍÍÍÍÍÍÍÍÍÍÍÍÍÍ¼

♀

ÉÍÍÍÍÍÍÍÍÍÍÍÍÍÍÍÍÍÍÍÍÍÍÍÍÍÍÍÍÍÍÍÍÍÍÍÍÍÍÍÍÍÍÍÍÍ»
ºTOD PROGRAM STEP   1                                   º
º                                                       º
ºDAY PGM NUM....  2                                     º
ºSTEP BEGINS....  7:00                                  º
º                                                       º
ºFLASH.......... .   DIM ENABLE..... .                 º
ºRED REST....... .   ALT VEH EXTSN... .                º
ºSPARE 5........ .   DET LOG ENABLE.. .                º
ºSPARE 3........ .   SPARE 4........ .                 º
ºTYPE 0 DELAY EN. .   SPARE 2........ .                 º
ºDET DIAG PLAN... 0                                     º
º                                                       º
º                       A..B..C..D..E..F                º
ºALTERNATE SEQUENCE     .  .  .  .  .  .                º
º                                                       º
ºADDITIONAL SCREEN(S)                                   º
ÈÍÍÍÍÍÍÍÍÍÍÍÍÍÍÍÍÍÍÍÍÍÍÍÍÍÍÍÍÍÍÍÍÍÍÍÍÍÍÍÍÍÍÍÍÍ¼

ÉÍÍÍÍÍÍÍÍÍÍÍÍÍÍÍÍÍÍÍÍÍÍÍÍÍÍÍÍÍÍÍÍÍÍÍÍÍÍÍÍÍÍÍÍÍ»
º                                          1 1 1        º
ºPHASE..........  1 2 3 4 5 6 7 8 9 0 1 2              º
ºMAX2 ENABLE....  . . . . . . . . . . . .              º
ºMAX3 ENABLE....  . . . . . . . . . . . .              º
ºVEH RECALL.....  . . . . . . . . . . . .              º
ºVEH MAX RECALL.  . X . . . . . X . . . .              º
ºPED RECALL.....  . . . . . . . . . . . .              º
ºCOND SERV INH..  . . . . . . . . . . . .              º
ºPHASE OMIT.....  . . . . . . . . . . . .              º
ºSPECIAL FCTNS..  . . . . . . . . (1 - 8)              º
º                                                       º
º                                                       º
º                                                       º
º                                                       º
º                                                       º
ºADDITIONAL SCREEN(S)                                   º
ÈÍÍÍÍÍÍÍÍÍÍÍÍÍÍÍÍÍÍÍÍÍÍÍÍÍÍÍÍÍÍÍÍÍÍÍÍÍÍÍÍÍÍÍÍÍ¼

ÉÍÍÍÍÍÍÍÍÍÍÍÍÍÍÍÍÍÍÍÍÍÍÍÍÍÍÍÍÍÍÍÍÍÍÍÍÍÍÍÍÍÍÍÍÍ»
ºTOD PROGRAM STEP   2                                   º
º                                                       º
ºDAY PGM NUM....  2                                     º
```

```
ºSTEP BEGINS.... 16:00                                  º
º                                                       º
ºFLASH.......... .   DIM ENABLE..... . º
ºRED REST....... .   ALT VEH EXTSN... . º
ºSPARE 5........ .   DET LOG ENABLE.. . º
ºSPARE 3........ .   SPARE 4........ . º
ºTYPE 0 DELAY EN. .   SPARE 2........ . º
ºDET DIAG PLAN... 0                                     º
º                                                       º
º                         A..B..C..D..E..F º
ºALTERNATE SEQUENCE       .  .  .  .  .  . º
º                                                       º
ºADDITIONAL SCREEN(S)                                   º
ÈÍÍÍÍÍÍÍÍÍÍÍÍÍÍÍÍÍÍÍÍÍÍÍÍÍÍÍÍÍÍÍÍÍÍÍÍÍÍÍÍÍÍ¼
♀
ÉÍÍÍÍÍÍÍÍÍÍÍÍÍÍÍÍÍÍÍÍÍÍÍÍÍÍÍÍÍÍÍÍÍÍÍÍÍÍÍÍÍÍ»
º                                       1 1 1º
ºPHASE.........  1 2 3 4 5 6 7 8 9 0 1 2º
ºMAX2 ENABLE....  . . . . . . . . . . . .º
ºMAX3 ENABLE....  . . . . . . . . . . . .º
ºVEH RECALL.....  . . . . . . . . . . . .º
ºVEH MAX RECALL.  . . . . . . . . . . . .º
ºPED RECALL.....  . . . . . . . . . . . .º
ºCOND SERV INH..  . . . . . . . . . . . .º
ºPHASE OMIT.....  . . . . . . . . . . . .º
ºSPECIAL FCTNS..  . . . . . . . (1 - 8)º
º                                                       º
º                                                       º
º                                                       º
º                                                       º
º                                                       º
ºADDITIONAL SCREEN(S)                                   º
ÈÍÍÍÍÍÍÍÍÍÍÍÍÍÍÍÍÍÍÍÍÍÍÍÍÍÍÍÍÍÍÍÍÍÍÍÍÍÍÍÍÍÍ¼
♀
ÉÍÍÍÍÍÍÍÍÍÍÍÍÍÍÍÍÍÍÍÍÍÍÍÍÍÍÍÍÍÍÍÍÍÍÍÍÍÍÍÍÍÍ»
º*****************************************º
º*   ECONOLITE CONTROL PRODUCTS, INC.    *º
º*             ASC/2-2000                *º
º*          Copyright (C) 1992           *º
º*                                       *º
º* City of Ontario, T MffdM Engineering *º
º*  ASC/2-2M0MM Co figuratiMODMer m1.1   *º
º*                                       *º
º*   SOFTWARE ASSY              VERSION   *º
º*   BOOT            32783        1.25   *º
º*   MAIN PROGRAM    32787        1.59   *º
º*   HELP            32789        1.48   *º
º*   CONFIGURATION   32790       C8145   *º
º*                                       *º
º*                                       *º
º*****************************************º
ÈÍÍÍÍÍÍÍÍÍÍÍÍÍÍÍÍÍÍÍÍÍÍÍÍÍÍÍÍÍÍÍÍÍÍÍÍÍÍÍÍÍÍ¼
ÉÍÍÍÍÍÍÍÍÍÍÍÍÍÍÍÍÍÍÍÍÍÍÍÍÍÍÍÍÍÍÍÍÍÍÍÍÍÍÍÍÍÍ»
º          DETECTOR TYPE/TIMERS                   º
º                                 NO    LOG       º
ºDET TYPE LOCK  EXTEND DELAY RESET ENABLEº
º 1   0     .    0.0     0    .      .  º
º 2   1     .    0.0     5    .      .  º
º 3   1     .    0.0     2    .      .  º
º 4   0     .    0.0     0    .      .  º
º 5   0     .    0.0     0    .      .  º
º 6   0     .    0.0     0    .      .  º
```

```
º 7   0     .     0.0     0    .      .  º
º 8   0     .     0.0     0    .      .  º
º 9   0     .     0.0     0    .      .  º
º10   0     .     0.0     0    .      .  º
º11   0     .     0.0     0    .      .  º
º12   0     .     0.0     0    .      .  º
ºADDITIONAL SCREEN(S)                    º
ÈÍÍÍÍÍÍÍÍÍÍÍÍÍÍÍÍÍÍÍÍÍÍÍÍÍÍÍÍÍÍÍÍÍÍÍÍÍÍ¼

ÉÍÍÍÍÍÍÍÍÍÍÍÍÍÍÍÍÍÍÍÍÍÍÍÍÍÍÍÍÍÍÍÍÍÍÍÍÍÍ»
º          DETECTOR TYPE/TIMERS          º
º                                NO    LOG   º
ºDET TYPE LOCK  EXTEND DELAY RESET ENABLEº
º13   0     .     0.0     0    .      .  º
º14   0     .     0.0     0    .      .  º
º15   0     .     0.0     0    .      .  º
º16   0     .     0.0     0    .      .  º
º17   0     .     0.0     0    .      .  º
º18   0     .     0.0     0    .      .  º
º19   0     .     0.0     0    .      .  º
º20   0     .     0.0     0    .      .  º
º21   0     .     0.0     0    .      .  º
º22   0     .     0.0     0    .      .  º
º23   0     .     0.0     0    .      .  º
º24   0     .     0.0     0    .      .  º
ºADDITIONAL SCREEN(S)                    º
ÈÍÍÍÍÍÍÍÍÍÍÍÍÍÍÍÍÍÍÍÍÍÍÍÍÍÍÍÍÍÍÍÍÍÍÍÍÍÍ¼

ÉÍÍÍÍÍÍÍÍÍÍÍÍÍÍÍÍÍÍÍÍÍÍÍÍÍÍÍÍÍÍÍÍÍÍÍÍÍÍ»
º          DETECTOR TYPE/TIMERS          º
º                                NO    LOG   º
ºDET TYPE LOCK  EXTEND DELAY RESET ENABLEº
º21   0     .     0.0     0    .      .  º
º22   0     .     0.0     0    .      .  º
º23   0     .     0.0     0    .      .  º
º24   0     .     0.0     0    .      .  º
º25   0     .     0.0     0    .      .  º
º26   0     .     0.0     0    .      .  º
º27   0     .     0.0     0    .      .  º
º28   0     .     0.0     0    .      .  º
º29   0     .     0.0     0    .      .  º
º30   0     .     0.0     0    .      .  º
º31   0     .     0.0     0    .      .  º
º32   0     .     0.0     0    .      .  º
ºEND OF SUBMENU                          º
ÈÍÍÍÍÍÍÍÍÍÍÍÍÍÍÍÍÍÍÍÍÍÍÍÍÍÍÍÍÍÍÍÍÍÍÍÍÍÍ¼

ÉÍÍÍÍÍÍÍÍÍÍÍÍÍÍÍÍÍÍÍÍÍÍÍÍÍÍÍÍÍÍÍÍÍÍÍÍÍÍ»
º      DETECTOR PHASE ASSIGNMENT         º
º              PHASE ASSIGNMENT: 1 1 1   º
ºDETECTOR      1 2 3 4 5 6 7 8 9 0 1 2   º
º    1         . . . . . . . . . . . .   º
º    2         . X . . . . . . . . . .   º
º    3         . . X . . . . . . . . .   º
º    4         . . . X . . . . . . . .   º
º    5         . . . . . . . . . . . .   º
º    6         . . . . . . . . . . . .   º
º    7         . . . . . . . . . . . .   º
º    8         . . . . . . . X . . . .   º
º    9         . . . . . . . . . . . .   º
º   10         . . . . . . . . . . . .   º
º   11         . . . . . . . . . . . .   º
º   12         . . . X . . . . . . . .   º
```

```
ºADDITIONAL SCREEN(S)                                          º
ÈÍÍÍÍÍÍÍÍÍÍÍÍÍÍÍÍÍÍÍÍÍÍÍÍÍÍÍÍÍÍÍÍÍÍÍÍÍÍÍÍÍÍÍÍÍÍÍÍÍÍÍÍÍÍ¼

ÉÍÍÍÍÍÍÍÍÍÍÍÍÍÍÍÍÍÍÍÍÍÍÍÍÍÍÍÍÍÍÍÍÍÍÍÍÍÍÍÍÍÍÍÍÍÍÍÍÍÍÍÍÍÍ»
º      DETECTOR PHASE ASSIGNMENT                               º
º               PHASE ASSIGNMENT: 1 1 1                        º
ºDETECTOR       1 2 3 4 5 6 7 8 9 0 1 2                        º
º   13          . . . . . . . . . . . .                        º
º   14          . . . . . . . . . . . .                        º
º   15          . . . . . . X . . . . .                        º
º   16          . . . . . . . X . . . .                        º
º   17          . . . . . . . . . . . .                        º
º   18          . X . . . . . . . . . .                        º
º   19          . . . . . . . . . . . .                        º
º   20          . . . X . . . . . . . .                        º
º   21          . X . . . . . . . . . .                        º
º   22          . . . . . . . . . . . .                        º
º   23          . . . . . . X . . . . .                        º
º   24          . . . . . . . X . . . .                        º
ºADDITIONAL SCREEN(S)                                          º
ÈÍÍÍÍÍÍÍÍÍÍÍÍÍÍÍÍÍÍÍÍÍÍÍÍÍÍÍÍÍÍÍÍÍÍÍÍÍÍÍÍÍÍÍÍÍÍÍÍÍÍÍÍÍÍ¼

♀

ÉÍÍÍÍÍÍÍÍÍÍÍÍÍÍÍÍÍÍÍÍÍÍÍÍÍÍÍÍÍÍÍÍÍÍÍÍÍÍÍÍÍÍÍÍÍÍÍÍÍÍÍÍÍÍ»
ºPED AND SYSTEM DETECTOR LOCAL ASSIGNMENTº
º                                                              º
ºDETECTOR LOG INTERVAL.........  0 MINUTESº
º----------------------------------------º
ºLOCAL          - PHASE PED DETECTOR -     º
ºPED DET         1   2   3   4   5   6     º
ºNUMBER..        1   2   3   4   5   6     º
º                7   8   9  10  11  12     º
ºNUMBER..        7   8   9  10  11  12     º
º----------------------------------------º
ºLOCAL      -- LOCAL SYSTEM DET NUMBER ---º
ºDETECTOR   1   2   3   4   5   6   7   8º
ºNUMBER..   0  10   0  12   0   0   0  16º
º           9  10  11  12  13  14  15  16º
ºNUMBER..   0   0   0   0   0   0   0   0º
ºEND OF SUBMENU                                                º
ÈÍÍÍÍÍÍÍÍÍÍÍÍÍÍÍÍÍÍÍÍÍÍÍÍÍÍÍÍÍÍÍÍÍÍÍÍÍÍÍÍÍÍÍÍÍÍÍÍÍÍÍÍÍÍ¼

ÉÍÍÍÍÍÍÍÍÍÍÍÍÍÍÍÍÍÍÍÍÍÍÍÍÍÍÍÍÍÍÍÍÍÍÍÍÍÍÍÍÍÍÍÍÍÍÍÍÍÍÍÍÍÍ»
º            SPEED DETECTORS                                   º
º                                                              º
º  SPEED DET NUMBER:  ...1....2....3....4º
ºONE DETECTOR SPEED:                                           º
º LOCAL DET NUMBER..     0    0    0    0º
º VEHICLE LENGTH....     0    0    0    0º
º LOOP LENGTH.......     0    0    0    0º
º                                                              º
ºTWO DETECTOR SPEED:                                           º
º LOCAL DET NUMBER..     0    0    0    0º
º SPEED TRAP LENGTH.     0    0    0    0º
º                                                              º
ºENABLE LOG.........     .    .    .    .º
º                                                              º
ºUNITS:  INCHES                                                º
ºADDITIONAL PAGE(S)                              MORE->º
ÈÍÍÍÍÍÍÍÍÍÍÍÍÍÍÍÍÍÍÍÍÍÍÍÍÍÍÍÍÍÍÍÍÍÍÍÍÍÍÍÍÍÍÍÍÍÍÍÍÍÍÍÍÍÍ¼

ÉÍÍÍÍÍÍÍÍÍÍÍÍÍÍÍÍÍÍÍÍÍÍÍÍÍÍÍÍÍÍÍÍÍÍÍÍÍÍÍÍÍÍÍÍÍÍÍÍÍÍÍÍÍÍ»
º            SPEED DETECTORS                                   º
º                                                              º
```

```
º  SPEED DET NUMBER:  ...5....6....7....8º
ºONE DETECTOR SPEED:                      º
º LOCAL DET NUMBER..     0    0    0    0º
º VEHICLE LENGTH....     0    0    0    0º
º LOOP LENGTH.......     0    0    0    0º
º                                         º
ºTWO DETECTOR SPEED:                      º
º LOCAL DET NUMBER..     0    0    0    0º
º SPEED TRAP LENGTH.     0    0    0    0º
º                                         º
ºENABLE LOG.........     .    .    .    .º
º                                         º
ºUNITS:  INCHES                           º
ºADDITIONAL PAGE(S)              <-MORE   º
ÈÍÍÍÍÍÍÍÍÍÍÍÍÍÍÍÍÍÍÍÍÍÍÍÍÍÍÍÍÍÍÍÍÍÍÍÍÍÍ¼

ÉÍÍÍÍÍÍÍÍÍÍÍÍÍÍÍÍÍÍÍÍÍÍÍÍÍÍÍÍÍÍÍÍÍÍÍÍÍÍ»
º            SPEED DETECTORS              º
º                                         º
º  SPEED DET NUMBER:  ...9...10...11...12º
ºONE DETECTOR SPEED:                      º
º LOCAL DET NUMBER..     0    0    0    0º
º VEHICLE LENGTH....     0    0    0    0º
º LOOP LENGTH.......     0    0    0    0º
º                                         º
ºTWO DETECTOR SPEED:                      º
º LOCAL DET NUMBER..     0    0    0    0º
º SPEED TRAP LENGTH.     0    0    0    0º
º                                         º
ºENABLE LOG.........     .    .    .    .º
º                                         º
º                                         º
ºEND OF SUBMENU                  MORE->   º
ÈÍÍÍÍÍÍÍÍÍÍÍÍÍÍÍÍÍÍÍÍÍÍÍÍÍÍÍÍÍÍÍÍÍÍÍÍÍÍ¼

ÉÍÍÍÍÍÍÍÍÍÍÍÍÍÍÍÍÍÍÍÍÍÍÍÍÍÍÍÍÍÍÍÍÍÍÍÍÍÍ»
º            SPEED DETECTORS              º
º                                         º
º  SPEED DET NUMBER:  ..13...14...15...16º
ºONE DETECTOR SPEED:                      º
º LOCAL DET NUMBER..     0    0    0    0º
º VEHICLE LENGTH....     0    0    0    0º
º LOOP LENGTH.......     0    0    0    0º
º                                         º
ºTWO DETECTOR SPEED:                      º
º LOCAL DET NUMBER..     0    0    0    0º
º SPEED TRAP LENGTH.     0    0    0    0º
º                                         º
ºENABLE LOG.........     .    .    .    .º
º                                         º
º                                         º
ºEND OF SUBMENU                  <-MORE   º
ÈÍÍÍÍÍÍÍÍÍÍÍÍÍÍÍÍÍÍÍÍÍÍÍÍÍÍÍÍÍÍÍÍÍÍÍÍÍÍ¼

ÉÍÍÍÍÍÍÍÍÍÍÍÍÍÍÍÍÍÍÍÍÍÍÍÍÍÍÍÍÍÍÍÍÍÍÍÍÍÍ»
º      PED DETECTOR DIAGNOSTIC PLAN       º
º                                         º
ºPLAN DET NUMBER  1  2  3  4  5  6  7  8 º
º  1  DIAG NUM..  0  0  0  0  0  0  0  0 º
º     SCALING...  1  1  1  1  1  1  1  1 º
º  2  DIAG NUM..  0  0  0  0  0  0  0  0 º
º     SCALING...  1  1  1  1  1  1  1  1 º
º  3  DIAG NUM..  0  0  0  0  0  0  0  0 º
```

```
º     SCALING...  1  1  1  1  1  1  1  1 º
º  4  DIAG NUM..  0  0  0  0  0  0  0  0 º
º     SCALING...  1  1  1  1  1  1  1  1 º
º  5  DIAG NUM..  0  0  0  0  0  0  0  0 º
º     SCALING...  1  1  1  1  1  1  1  1 º
º  6  DIAG NUM..  0  0  0  0  0  0  0  0 º
º     SCALING...  1  1  1  1  1  1  1  1 º
ºADDITIONAL SCREEN(S)              MORE->º
ÈÍÍÍÍÍÍÍÍÍÍÍÍÍÍÍÍÍÍÍÍÍÍÍÍÍÍÍÍÍÍÍÍÍÍÍÍÍÍÍÍÍÍ¼

ÉÍÍÍÍÍÍÍÍÍÍÍÍÍÍÍÍÍÍÍÍÍÍÍÍÍÍÍÍÍÍÍÍÍÍÍÍÍÍÍÍÍÍ»
º      PED DETECTOR DIAGNOSTIC PLAN      º
º                                         º
ºPLAN DET NUMBER  1  2  3  4  5  6  7  8 º
º  7  DIAG NUM..  0  0  0  0  0  0  0  0 º
º     SCALING...  1  1  1  1  1  1  1  1 º
º  8  DIAG NUM..  0  0  0  0  0  0  0  0 º
º     SCALING...  1  1  1  1  1  1  1  1 º
º                                         º
º                                         º
º                                         º
º                                         º
º                                         º
º                                         º
º                                         º
º                                         º
ºEND OF SUBMENU                    MORE->º
ÈÍÍÍÍÍÍÍÍÍÍÍÍÍÍÍÍÍÍÍÍÍÍÍÍÍÍÍÍÍÍÍÍÍÍÍÍÍÍÍÍÍÍ¼

ÉÍÍÍÍÍÍÍÍÍÍÍÍÍÍÍÍÍÍÍÍÍÍÍÍÍÍÍÍÍÍÍÍÍÍÍÍÍÍÍÍÍÍ»
º      PED DETECTOR DIAGNOSTIC PLAN      º
º                                         º
ºPLAN DET NUMBER  9 10 11 12              º
º  1  DIAG NUM..  0  0  0  0              º
º     SCALING...  1  1  1  1              º
º  2  DIAG NUM..  0  0  0  0              º
º     SCALING...  1  1  1  1              º
º  3  DIAG NUM..  0  0  0  0              º
º     SCALING...  1  1  1  1              º
º  4  DIAG NUM..  0  0  0  0              º
º     SCALING...  1  1  1  1              º
º  5  DIAG NUM..  0  0  0  0              º
º     SCALING...  1  1  1  1              º
º  6  DIAG NUM..  0  0  0  0              º
º     SCALING...  1  1  1  1              º
ºADDITIONAL SCREEN(S)           <-MORE    º
ÈÍÍÍÍÍÍÍÍÍÍÍÍÍÍÍÍÍÍÍÍÍÍÍÍÍÍÍÍÍÍÍÍÍÍÍÍÍÍÍÍÍÍ¼

ÉÍÍÍÍÍÍÍÍÍÍÍÍÍÍÍÍÍÍÍÍÍÍÍÍÍÍÍÍÍÍÍÍÍÍÍÍÍÍÍÍÍÍ»
º      PED DETECTOR DIAGNOSTIC PLAN      º
º                                         º
ºPLAN DET NUMBER  9 10 11 12              º
º  7  DIAG NUM..  0  0  0  0              º
º     SCALING...  1  1  1  1              º
º  8  DIAG NUM..  0  0  0  0              º
º     SCALING...  1  1  1  1              º
º                                         º
º                                         º
º                                         º
º                                         º
º                                         º
º                                         º
º                                         º
```

```
º                                                                    º
ºEND OF SUBMENU                                <-MORE  º
ÈÍÍÍÍÍÍÍÍÍÍÍÍÍÍÍÍÍÍÍÍÍÍÍÍÍÍÍÍÍÍÍÍÍÍÍÍÍÍÍÍÍÍÍÍÍÍÍÍ¼
♀

ÉÍÍÍÍÍÍÍÍÍÍÍÍÍÍÍÍÍÍÍÍÍÍÍÍÍÍÍÍÍÍÍÍÍÍÍÍÍÍÍÍÍÍÍÍÍÍÍÍ»
º      DETECTOR DIAGNOSTIC INTERVAL                                  º
º                                                                    º
ºDIAGNOSTIC     NO       MAX     ERRATIC                             º
º  NUMBER    ACTIVITY  PRESENCE  COUNTS                              º
º    1          0         0         0                               º
º    2          0         0         0                               º
º    3          0         0         0                               º
º    4          0         0         0                               º
º    5          0         0         0                               º
º    6          0         0         0                               º
º    7          0         0         0                               º
º    8          0         0         0                               º
º    9          0         0         0                               º
º   10          0         0         0                               º
º   11          0         0         0                               º
ºADDITIONAL SCREEN(S)                                                º
ÈÍÍÍÍÍÍÍÍÍÍÍÍÍÍÍÍÍÍÍÍÍÍÍÍÍÍÍÍÍÍÍÍÍÍÍÍÍÍÍÍÍÍÍÍÍÍÍÍ¼

ÉÍÍÍÍÍÍÍÍÍÍÍÍÍÍÍÍÍÍÍÍÍÍÍÍÍÍÍÍÍÍÍÍÍÍÍÍÍÍÍÍÍÍÍÍÍÍÍÍ»
º      DETECTOR DIAGNOSTIC INTERVAL                                  º
º                                                                    º
ºDIAGNOSTIC     NO       MAX     ERRATIC                             º
º  NUMBER    ACTIVITY  PRESENCE  COUNTS                              º
º   12          0         0         0                               º
º   13          0         0         0                               º
º   14          0         0         0                               º
º   15          0         0         0                               º
º   16          0         0         0                               º
º   17          0         0         0                               º
º   18          0         0         0                               º
º   19          0         0         0                               º
º   20          0         0         0                               º
º   21          0         0         0                               º
º   22          0         0         0                               º
ºADDITIONAL SCREEN(S)                                                º
ÈÍÍÍÍÍÍÍÍÍÍÍÍÍÍÍÍÍÍÍÍÍÍÍÍÍÍÍÍÍÍÍÍÍÍÍÍÍÍÍÍÍÍÍÍÍÍÍÍ¼

ÉÍÍÍÍÍÍÍÍÍÍÍÍÍÍÍÍÍÍÍÍÍÍÍÍÍÍÍÍÍÍÍÍÍÍÍÍÍÍÍÍÍÍÍÍÍÍÍÍ»
º      DETECTOR DIAGNOSTIC INTERVAL                                  º
º                                                                    º
ºDIAGNOSTIC     NO       MAX     ERRATIC                             º
º  NUMBER    ACTIVITY  PRESENCE  COUNTS                              º
º   22          0         0         0                               º
º   23          0         0         0                               º
º   24          0         0         0                               º
º   25          0         0         0                               º
º   26          0         0         0                               º
º   27          0         0         0                               º
º   28          0         0         0                               º
º   29          0         0         0                               º
º   30          0         0         0                               º
º   31          0         0         0                               º
º   32          0         0         0                               º
ºEND OF SUBMENU                                                      º
ÈÍÍÍÍÍÍÍÍÍÍÍÍÍÍÍÍÍÍÍÍÍÍÍÍÍÍÍÍÍÍÍÍÍÍÍÍÍÍÍÍÍÍÍÍÍÍÍÍ¼
♀
```

Milliken timing 082017 - Milliken @ 7th 111522

Configuration Phase Sequence Page 1

Phase Ring (MM)1-1-1

Phase															
1	2	3	4	5	6	7	8	9	10	11	12	13	14	15	16
1	1	1	1	2	2	2	2	1	1	2	2	1	1	2	2

Hardware Alternate Sequence Enable: No

Phase Ring Sequence

Sequence	Ring	Phase															
		1	2	3	4	5	6	7	8	9	10	11	12	13	14	15	16
	Barrier Mode	B		B		B		B		B							
1	1	1	2	3	4	9	10	13	14	0	0	0	0	0	0	0	0
1	2	5	6	7	8	11	12	15	16	0	0	0	0	0	0	0	0
2	1	2	1	3	4	10	9	13	14	0	0	0	0	0	0	0	0
2	2	5	6	7	8	11	12	15	16	0	0	0	0	0	0	0	0
3	1	1	2	4	3	9	10	14	13	0	0	0	0	0	0	0	0
3	2	5	6	7	8	11	12	15	16	0	0	0	0	0	0	0	0
4	1	2	1	4	3	10	9	14	13	0	0	0	0	0	0	0	0
4	2	5	6	7	8	11	12	15	16	0	0	0	0	0	0	0	0
5	1	1	2	3	4	9	10	13	14	0	0	0	0	0	0	0	0
5	2	6	5	7	8	12	11	15	16	0	0	0	0	0	0	0	0
6	1	2	1	3	4	10	9	13	14	0	0	0	0	0	0	0	0
6	2	6	5	7	8	12	11	15	16	0	0	0	0	0	0	0	0
7	1	1	2	4	3	9	10	14	13	0	0	0	0	0	0	0	0
7	2	6	5	7	8	12	11	15	16	0	0	0	0	0	0	0	0
8	1	2	1	4	3	10	9	14	13	0	0	0	0	0	0	0	0
8	2	6	5	7	8	12	11	15	16	0	0	0	0	0	0	0	0
9	1	1	2	3	4	9	10	13	14	0	0	0	0	0	0	0	0
9	2	5	6	8	7	11	12	16	15	0	0	0	0	0	0	0	0
10	1	2	1	3	4	10	9	13	14	0	0	0	0	0	0	0	0
10	2	5	6	8	7	11	12	16	15	0	0	0	0	0	0	0	0
11	1	1	2	4	3	9	10	14	13	0	0	0	0	0	0	0	0
11	2	5	6	8	7	11	12	16	15	0	0	0	0	0	0	0	0
12	1	2	1	4	3	10	9	14	13	0	0	0	0	0	0	0	0
12	2	5	6	8	7	11	12	16	15	0	0	0	0	0	0	0	0
13	1	1	2	3	4	9	10	13	14	0	0	0	0	0	0	0	0
13	2	6	5	8	7	12	11	16	15	0	0	0	0	0	0	0	0
14	1	2	1	3	4	10	9	13	14	0	0	0	0	0	0	0	0
14	2	6	5	8	7	12	11	16	15	0	0	0	0	0	0	0	0
15	1	1	2	4	3	9	10	14	13	0	0	0	0	0	0	0	0
15	2	6	5	8	7	12	11	16	15	0	0	0	0	0	0	0	0
16	1	2	1	4	3	10	9	14	13	0	0	0	0	0	0	0	0
16	2	6	5	8	7	12	11	16	15	0	0	0	0	0	0	0	0

Phase Compatibility (MM)1-1-2

Phase 1	Phase 2
1	5
1	6
2	5
2	6
3	7
3	8
4	7
4	8
9	11
9	12
10	11
10	12
13	15
13	16
14	15
14	16

Phase Direction Descriptions

Phase Description

Overlap Direction Descriptions

Overlap Description

Administration (MM)1-7-1
Enable CRC Check: No
CRC: 0000
Request Download Program Data: No
Enable Automatic Backup to Datakey: No

Milliken timing 082017 - Milliken @ 7th 111522

Configuration Phase Sequence Page 2

Phases In Use	In Use(MM)1-2	Exclusive Ped(MM)1-2	Backup Prevent(MM)1-1-3	Simultaneous Gap(MM)1-1-4	Disable(MM)1-1-4
		Phase	Phase Timing Phase Backup	Phase Must Gap with Phase	Phase
1					
2					
4					
5					
6					
8					

Load Switch Assignments (MMU Channel) (MM)1-3

Phase	Overlap	Type	Dim R	Y	G	D	Auto R	Y	Flash Together
1	1	V				+	Yes		
2	2	V				+	Yes		Yes
3	3	O				+	Yes		
4	4	V				+	Yes		Yes
5	5	V				-	Yes		
6	6	V				-	Yes		Yes
7	7	O				-	Yes		
8	8	V				-	Yes		Yes
9	2	P				+			
10	4	P				+			
11	6	P				-			
12	8	P				-			
13	0					-			
14	0					-			
15	0					-			
16	0					-			

Milliken timing 082017 - Milliken @ 7th 111522

Configuration Port 1 (SDLC)

SDLC Options (MM)1-4-1

Bus Interface Terminal/Facilities

BIU	Term and Facility Enable	Detector Rack Enable
1	No	No
2	No	No
3	No	No
4	No	No
5	No	No
6	No	No
7	No	No
8	No	No

Enable TS2/MMU Type Cabinet: No
Enable MMU Extended Status: No
Enable SDLC Stop Time: No
Enable 3 Critical RFE's Lockup: No
MMU To CU SDLC External Start: Enabled
Diagonstics (Test Fixture) Enable: No

Secondary To Secondary Addressing

ID	Term and Facility Enable	Detector Rack Enable
1	No	No
2	No	No
3	No	No
4	No	No
5	No	No
6	No	No
7	No	No
8	No	No

Secondary To Secondary Addressing MMU: No
Secondary To Secondary Addressing Diagonstics: No

MMU Program (MM)1-4-2

Channel Can Serve with Channel

Channel 1	Channel 2

Color Check Enable (MM)1-4-3
Enable Color Check: Yes

Color Check Enable

MMU Channel	Green	Yellow	Red
1	Yes	Yes	Yes
2	Yes	Yes	Yes
4	Yes	Yes	Yes
5	Yes	Yes	Yes
6	Yes	Yes	Yes
8	Yes	Yes	Yes
9	Yes	No	Yes
10	Yes	No	Yes
11	Yes	No	Yes
12	Yes	No	Yes

Milliken timing 082017 - Milliken @ 7th 111522

Configuration Communications

Ethernet Port Configuration (MM)1-5-1

Controller IP:	10.70.10.51
Subnet Mask:	255.255.255.0
Default Gateway IP:	10.70.10.1
Server IP:	10.70.10.1

NTCIP Parameters (MM)1-5-5

Backup Time:	0
UDP Port:	501
Ethernet Priority:	1
Port 2 Priority:	4
Port 3A Priority:	2
Port 3B Priority:	3

Note for 2070: Port 2 is C50S, Port 3A is C21S, and Port 3B is C22S

Port Configuration (MM)1-5-2 to 1-5-4

Port	Protocol	Enable	Data Rate	Data Parity Stop	Modem Setup String	User String	Comm Port Address	System Detector 9-1	Telemetry Response Delay	Duplex Half/Full	Flow Control	AB3418 NTCIP Group Address	AB3418 NTCIP Single Flag Enable	RTS to CTS Delay	RTS Turn Off Delay	Droupout Time	Early RTS	FSK Hardware
2	NTCIP	No	9600	8 N 1	None		1	0	0.0	Full	Yes	0	No	0.0	0.0	10	No	Yes
3A	NTCIP	Yes	9600	8 N 1	None		1	0	0.1	Full	Yes	0	No	0.0	0.0	10	No	Yes
3B	ECPIP	No	1200	8 0 1	None		2	0	0.1	Full	Yes	0	No	3.0	2.0	10	No	Yes

ECPIP Parameters (MM)1-5-6

Expanded System Detector Address: 0

Local System Detector

Local System Detector	Number

Milliken timing 082017 - Milliken @ 7th 111522

Configuration Logging/Display

Enable Event Logs (MM)1-6-1		**Alarm Logs (MM)1-6-1**	**Display Options (MM)1-7-2**
Critical RFE's:	Yes	Enabled: 1 15 16	Key Click Enable: Yes
3 Critical RFE's in 24 Hours:	Yes		Backlight Enable: Yes
MMU Flash Faults:	Yes		
Local Flash Faults:	Yes		
Non-Critical RFE's (Det/Test):	Yes		
Detector Errors:	Yes		
Coordination Errors:	Yes		
Controller Download:	Yes		
Preempt:	Yes		
TSP:	Yes		
Power On/Off:	Yes		
Low Battery:	Yes		
Access:	Yes		
Data Change:	Yes		

Milliken timing 082017 - Milliken @ 7th 111522

Logic Processor Page 1

Statement Control (MM)1-8-1

LP Statement Control

Milliken timing 082017 - Milliken @ 7th 111522

Logic Processor Page 2

Logic Statements (MM)1-8-2

Milliken timing 082017 - Milliken @ 7th 111522

Controller Timing Plan (MM)2-1

Plan 1

Phase	1	2	3	4	5	6	7	8	9	10	11	12	13	14	15	16
Min Green	5	5	0	5	5	5	0	5	5	5	5	5	5	5	5	5
BK Min Green	0	0	0	0	0	0	0	0	0	0	0	0	0	0	0	0
CS Min Green	0	0	0	0	0	0	0	0	0	0	0	0	0	0	0	0
Delay Green	0	0	0	0	0	0	0	0	0	0	0	0	0	0	0	0
Walk	0	10	0	10	0	10	0	10	0	10	0	10	0	10	0	10
Walk 2	0	0	0	0	0	0	0	0	0	0	0	0	0	0	0	0
Walk Max	0	0	0	0	0	0	0	0	0	0	0	0	0	0	0	0
Ped Clear	0	10	0	19	0	10	0	19	0	16	0	16	0	16	0	16
Ped Clear 2	0	0	0	0	0	0	0	0	0	0	0	0	0	0	0	0
Ped Clear Max	0	0	0	0	0	0	0	0	0	0	0	0	0	0	0	0
Ped CO	0	0	0	0	0	0	0	0	0	0	0	0	0	0	0	0
Vehicle Ext	2.0	2.0	2.0	2.0	2.0	2.0	2.0	2.0	5.0	5.0	5.0	5.0	5.0	5.0	5.0	5.0
Vehicle Ext 2	0.0	0.0	0.0	0.0	0.0	0.0	0.0	0.0	0.0	0.0	0.0	0.0	0.0	0.0	0.0	0.0
Max 1	25	45	15	25	25	45	15	25	35	35	35	35	35	35	35	35
Max 2	0	0	0	0	0	0	0	0	40	40	40	40	40	40	40	40
Max 3	0	0	0	0	0	0	0	0	0	0	0	0	0	0	0	0
DYM Max	0	0	0	0	0	0	0	0	0	0	0	0	0	0	0	0
DYM Stp	0.0	0.0	0.0	0.0	0.0	0.0	0.0	0.0	0.0	0.0	0.0	0.0	0.0	0.0	0.0	0.0
Yellow	3.0	4.9	3.0	3.6	3.0	4.9	3.0	3.6	3.0	3.0	3.0	3.0	3.0	3.0	3.0	3.0
Red Clear	1.0	1.1	1.0	2.6	1.0	1.1	1.0	2.6	1.0	1.0	1.0	1.0	1.0	1.0	1.0	1.0
Red Max	0.0	0.0	0.0	0.0	0.0	0.0	0.0	0.0	0.0	0.0	0.0	0.0	0.0	0.0	0.0	0.0
Red Revert	2.0	2.0	2.0	2.0	2.0	2.0	2.0	2.0	2.0	2.0	2.0	2.0	2.0	2.0	2.0	2.0
ACT B4	0	0	0	0	0	0	0	0	0	0	0	0	0	0	0	0
SEC/ACT	0.0	0.0	0.0	0.0	0.0	0.0	0.0	0.0	0.0	0.0	0.0	0.0	0.0	0.0	0.0	0.0
Max Int	0	0	0	0	0	0	0	0	0	0	0	0	0	0	0	0
Time B4	0	0	0	0	0	0	0	0	0	0	0	0	0	0	0	0
Cars Wt	0	0	0	0	0	0	0	0	0	0	0	0	0	0	0	0
STPT Duc	0.0	0.0	0.0	0.0	0.0	0.0	0.0	0.0	0.0	0.0	0.0	0.0	0.0	0.0	0.0	0.0
Time To Reduce	0	0	0	0	0	0	0	0	0	0	0	0	0	0	0	0
Min Gap	0.0	0.0	0.0	0.0	0.0	0.0	0.0	0.0	0.0	0.0	0.0	0.0	0.0	0.0	0.0	0.0

Plan 2

Phase	1	2	3	4	5	6	7	8	9	10	11	12	13	14	15	16
Min Green	5	5	5	5	5	5	5	5	5	5	5	5	5	5	5	5
BK Min Green	0	0	0	0	0	0	0	0	0	0	0	0	0	0	0	0
CS Min Green	0	0	0	0	0	0	0	0	0	0	0	0	0	0	0	0
Delay Green	0	0	0	0	0	0	0	0	0	0	0	0	0	0	0	0
Walk	0	10	0	10	0	10	0	10	0	10	0	10	0	10	0	10
Walk 2	0	0	0	0	0	0	0	0	0	0	0	0	0	0	0	0
Walk Max	0	0	0	0	0	0	0	0	0	0	0	0	0	0	0	0
Ped Clear	0	16	0	16	0	16	0	16	0	16	0	16	0	16	0	16
Ped Clear 2	0	0	0	0	0	0	0	0	0	0	0	0	0	0	0	0
Ped Clear Max	0	0	0	0	0	0	0	0	0	0	0	0	0	0	0	0
Ped CO	0	0	0	0	0	0	0	0	0	0	0	0	0	0	0	0
Vehicle Ext	5.0	5.0	5.0	5.0	5.0	5.0	5.0	5.0	5.0	5.0	5.0	5.0	5.0	5.0	5.0	5.0
Vehicle Ext 2	0.0	0.0	0.0	0.0	0.0	0.0	0.0	0.0	0.0	0.0	0.0	0.0	0.0	0.0	0.0	0.0
Max 1	35	35	35	35	35	35	35	35	35	35	35	35	35	35	35	35
Max 2	40	40	40	40	40	40	40	40	40	40	40	40	40	40	40	40
Max 3	0	0	0	0	0	0	0	0	0	0	0	0	0	0	0	0
DYM Max	0	0	0	0	0	0	0	0	0	0	0	0	0	0	0	0
DYM Stp	0.0	0.0	0.0	0.0	0.0	0.0	0.0	0.0	0.0	0.0	0.0	0.0	0.0	0.0	0.0	0.0
Yellow	3.0	3.0	3.0	3.0	3.0	3.0	3.0	3.0	3.0	3.0	3.0	3.0	3.0	3.0	3.0	3.0
Red Clear	1.0	1.0	1.0	1.0	1.0	1.0	1.0	1.0	1.0	1.0	1.0	1.0	1.0	1.0	1.0	1.0
Red Max	0.0	0.0	0.0	0.0	0.0	0.0	0.0	0.0	0.0	0.0	0.0	0.0	0.0	0.0	0.0	0.0
Red Revert	2.0	2.0	2.0	2.0	2.0	2.0	2.0	2.0	2.0	2.0	2.0	2.0	2.0	2.0	2.0	2.0
ACT B4	0	0	0	0	0	0	0	0	0	0	0	0	0	0	0	0
SEC/ACT	0.0	0.0	0.0	0.0	0.0	0.0	0.0	0.0	0.0	0.0	0.0	0.0	0.0	0.0	0.0	0.0
Max Int	0	0	0	0	0	0	0	0	0	0	0	0	0	0	0	0
Time B4	0	0	0	0	0	0	0	0	0	0	0	0	0	0	0	0
Cars Wt	0	0	0	0	0	0	0	0	0	0	0	0	0	0	0	0
STPT Duc	0.0	0.0	0.0	0.0	0.0	0.0	0.0	0.0	0.0	0.0	0.0	0.0	0.0	0.0	0.0	0.0
Time To Reduce	0	0	0	0	0	0	0	0	0	0	0	0	0	0	0	0
Min Gap	0.0	0.0	0.0	0.0	0.0	0.0	0.0	0.0	0.0	0.0	0.0	0.0	0.0	0.0	0.0	0.0

Plan 3

Phase	1	2	3	4	5	6	7	8	9	10	11	12	13	14	15	16
Min Green	5	5	5	5	5	5	5	5	5	5	5	5	5	5	5	5
BK Min Green	0	0	0	0	0	0	0	0	0	0	0	0	0	0	0	0
CS Min Green	0	0	0	0	0	0	0	0	0	0	0	0	0	0	0	0
Delay Green	0	0	0	0	0	0	0	0	0	0	0	0	0	0	0	0
Walk	0	10	0	10	0	10	0	10	0	10	0	10	0	10	0	10
Walk 2	0	0	0	0	0	0	0	0	0	0	0	0	0	0	0	0
Walk Max	0	0	0	0	0	0	0	0	0	0	0	0	0	0	0	0
Ped Clear	0	16	0	16	0	16	0	16	0	16	0	16	0	16	0	16
Ped Clear 2	0	0	0	0	0	0	0	0	0	0	0	0	0	0	0	0
Ped Clear Max	0	0	0	0	0	0	0	0	0	0	0	0	0	0	0	0
Ped CO	0	0	0	0	0	0	0	0	0	0	0	0	0	0	0	0
Vehicle Ext	5.0	5.0	5.0	5.0	5.0	5.0	5.0	5.0	5.0	5.0	5.0	5.0	5.0	5.0	5.0	5.0
Vehicle Ext 2	0.0	0.0	0.0	0.0	0.0	0.0	0.0	0.0	0.0	0.0	0.0	0.0	0.0	0.0	0.0	0.0
Max 1	35	35	35	35	35	35	35	35	35	35	35	35	35	35	35	35
Max 2	40	40	40	40	40	40	40	40	40	40	40	40	40	40	40	40
Max 3	0	0	0	0	0	0	0	0	0	0	0	0	0	0	0	0
DYM Max	0	0	0	0	0	0	0	0	0	0	0	0	0	0	0	0
DYM Stp	0.0	0.0	0.0	0.0	0.0	0.0	0.0	0.0	0.0	0.0	0.0	0.0	0.0	0.0	0.0	0.0
Yellow	3.0	3.0	3.0	3.0	3.0	3.0	3.0	3.0	3.0	3.0	3.0	3.0	3.0	3.0	3.0	3.0
Red Clear	1.0	1.0	1.0	1.0	1.0	1.0	1.0	1.0	1.0	1.0	1.0	1.0	1.0	1.0	1.0	1.0
Red Max	0.0	0.0	0.0	0.0	0.0	0.0	0.0	0.0	0.0	0.0	0.0	0.0	0.0	0.0	0.0	0.0
Red Revert	2.0	2.0	2.0	2.0	2.0	2.0	2.0	2.0	2.0	2.0	2.0	2.0	2.0	2.0	2.0	2.0
ACT B4	0	0	0	0	0	0	0	0	0	0	0	0	0	0	0	0
SEC/ACT	0.0	0.0	0.0	0.0	0.0	0.0	0.0	0.0	0.0	0.0	0.0	0.0	0.0	0.0	0.0	0.0
Max Int	0	0	0	0	0	0	0	0	0	0	0	0	0	0	0	0
Time B4	0	0	0	0	0	0	0	0	0	0	0	0	0	0	0	0
Cars Wt	0	0	0	0	0	0	0	0	0	0	0	0	0	0	0	0
STPT Duc	0.0	0.0	0.0	0.0	0.0	0.0	0.0	0.0	0.0	0.0	0.0	0.0	0.0	0.0	0.0	0.0
Time To Reduce	0	0	0	0	0	0	0	0	0	0	0	0	0	0	0	0
Min Gap	0.0	0.0	0.0	0.0	0.0	0.0	0.0	0.0	0.0	0.0	0.0	0.0	0.0	0.0	0.0	0.0

Plan 4

Phase	1	2	3	4	5	6	7	8	9	10	11	12	13	14	15	16
Min Green	5	5	5	5	5	5	5	5	5	5	5	5	5	5	5	5
BK Min Green	0	0	0	0	0	0	0	0	0	0	0	0	0	0	0	0
CS Min Green	0	0	0	0	0	0	0	0	0	0	0	0	0	0	0	0
Delay Green	0	0	0	0	0	0	0	0	0	0	0	0	0	0	0	0
Walk	0	10	0	10	0	10	0	10	0	10	0	10	0	10	0	10
Walk 2	0	0	0	0	0	0	0	0	0	0	0	0	0	0	0	0
Walk Max	0	0	0	0	0	0	0	0	0	0	0	0	0	0	0	0
Ped Clear	0	16	0	16	0	16	0	16	0	16	0	16	0	16	0	16
Ped Clear 2	0	0	0	0	0	0	0	0	0	0	0	0	0	0	0	0
Ped Clear Max	0	0	0	0	0	0	0	0	0	0	0	0	0	0	0	0
Ped CO	0	0	0	0	0	0	0	0	0	0	0	0	0	0	0	0
Vehicle Ext	5.0	5.0	5.0	5.0	5.0	5.0	5.0	5.0	5.0	5.0	5.0	5.0	5.0	5.0	5.0	5.0
Vehicle Ext 2	0.0	0.0	0.0	0.0	0.0	0.0	0.0	0.0	0.0	0.0	0.0	0.0	0.0	0.0	0.0	0.0
Max 1	35	35	35	35	35	35	35	35	35	35	35	35	35	35	35	35
Max 2	40	40	40	40	40	40	40	40	40	40	40	40	40	40	40	40
Max 3	0	0	0	0	0	0	0	0	0	0	0	0	0	0	0	0
DYM Max	0	0	0	0	0	0	0	0	0	0	0	0	0	0	0	0
DYM Stp	0.0	0.0	0.0	0.0	0.0	0.0	0.0	0.0	0.0	0.0	0.0	0.0	0.0	0.0	0.0	0.0
Yellow	3.0	3.0	3.0	3.0	3.0	3.0	3.0	3.0	3.0	3.0	3.0	3.0	3.0	3.0	3.0	3.0
Red Clear	1.0	1.0	1.0	1.0	1.0	1.0	1.0	1.0	1.0	1.0	1.0	1.0	1.0	1.0	1.0	1.0
Red Max	0.0	0.0	0.0	0.0	0.0	0.0	0.0	0.0	0.0	0.0	0.0	0.0	0.0	0.0	0.0	0.0
Red Revert	2.0	2.0	2.0	2.0	2.0	2.0	2.0	2.0	2.0	2.0	2.0	2.0	2.0	2.0	2.0	2.0
ACT B4	0	0	0	0	0	0	0	0	0	0	0	0	0	0	0	0
SEC/ACT	0.0	0.0	0.0	0.0	0.0	0.0	0.0	0.0	0.0	0.0	0.0	0.0	0.0	0.0	0.0	0.0
Max Int	0	0	0	0	0	0	0	0	0	0	0	0	0	0	0	0
Time B4	0	0	0	0	0	0	0	0	0	0	0	0	0	0	0	0
Cars Wt	0	0	0	0	0	0	0	0	0	0	0	0	0	0	0	0
STPT Duc	0.0	0.0	0.0	0.0	0.0	0.0	0.0	0.0	0.0	0.0	0.0	0.0	0.0	0.0	0.0	0.0
Time To Reduce	0	0	0	0	0	0	0	0	0	0	0	0	0	0	0	0
Min Gap	0.0	0.0	0.0	0.0	0.0	0.0	0.0	0.0	0.0	0.0	0.0	0.0	0.0	0.0	0.0	0.0

Milliken timing 082017 - Milliken @ 7th 111522

Controller Overlaps

Vehicle Overlaps (MM)2-2

Overlap	Type	Lag Green	Yellow	Red	Advance Green

Phases

Overlap	Phase	Included	Protect	Modifier	Ped Protect	Not Overlap	Lag X Phase	Lag 2 Phase	Flash Green

Guaranteed Minimum Time Data (MM) 2-4
Phase Time Data

Phase	Min Green	Walk	Ped Clear	Yellow	Red Clear	Overlap Green
A01	5	0	7	3.0	0.0	5
B02	5	0	7	3.0	0.0	5
C03	5	0	7	3.0	0.0	5
D04	5	0	7	3.0	0.0	5
E05	5	0	7	3.0	0.0	5
F06	5	0	7	3.0	0.0	5
G07	5	0	7	3.0	0.0	5
H08	5	0	7	3.0	0.0	5
I09	5	0	7	3.0	0.0	5
J10	5	0	7	3.0	0.0	5
K11	5	0	7	3.0	0.0	5
L12	5	0	7	3.0	0.0	5
M13	5	0	7	3.0	0.0	5
N14	5	0	7	3.0	0.0	5
O15	5	0	7	3.0	0.0	5
P16	5	0	7	3.0	0.0	5

Milliken timing 082017 - Milliken @ 7th 111522

Controller Pedestrian Overlaps
Pedestrian Overlaps (MM) 2-3
Included Phase Ped Overlap

Milliken timing 082017 - Milliken @ 7th 111522

Controller Start/Fash (MM) 2-5

Startup

Phase	Phase Setting
4	Y
8	Y

Overlap

Flash > Mon:	Yes
Flash Time:	10
All Red:	5
Power Start Sequence:	1

Automatic Flash

Entry Phase
4
8

Exit Phase
4
8

Overlap Exit

Flash > Mon:	Yes
Exit Flash Interval:	Y
Minimum Auto Flash:	8
Minimumin Recall:	No
Cycle Through Phase:	No

Milliken timing 082017 - Milliken @ 7th 111522

Controller Options

Controller Options (MM)2-6-1

Phase	Flashing Green Phase	Guaranteed Passage	Non Act 1	Non Act 2	Dual Entry	Conditional Service	Conditional Reservice	Ped Reservice	Rest In Walk	Flashing Walk	Ped Clear Yellow	Ped Clear Red	IGRN + Veh Ext
2	No	No	Yes	No	Yes	No	No	No	No	No	No	No	No
4	No	No	No	Yes	Yes	No	No	No	No	No	No	No	No
6	No	No	Yes	No	Yes	No	No	No	No	No	No	No	No
8	No	No	No	Yes	Yes	No	No	No	No	No	No	No	No

Ped Clear Protect: Off Red Revert: 2.0

Act Pre-Time (MM)2-7

Pre-Time Mode Enable: No Free Input Enables Pre-Timed: Yes

Pre-Timed Phase

Phase Recall Options (MM)2-8

Plan	Phase	Lock Detector	Vehicle Recall	Ped Recall	Max Recall	Soft Recall	No Rest	AI Calc
1	2	No	Yes	No	No	No	No	No
1	6	No	Yes	No	No	No	No	No
2	1	Yes	No	No	No	No	No	No
2	2	Yes	No	No	No	No	No	No
2	3	Yes	No	No	No	No	No	No
2	4	Yes	No	No	No	No	No	No
2	5	Yes	No	No	No	No	No	No
2	6	Yes	No	No	No	No	No	No
2	7	Yes	No	No	No	No	No	No
2	8	Yes	No	No	No	No	No	No
2	9	Yes	No	No	No	No	No	No
2	10	Yes	No	No	No	No	No	No
2	11	Yes	No	No	No	No	No	No
2	12	Yes	No	No	No	No	No	No
2	13	Yes	No	No	No	No	No	No
2	14	Yes	No	No	No	No	No	No
2	15	Yes	No	No	No	No	No	No
2	16	Yes	No	No	No	No	No	No
3	1	Yes	No	No	No	No	No	No
3	2	Yes	No	No	No	No	No	No
3	3	Yes	No	No	No	No	No	No
3	4	Yes	No	No	No	No	No	No
3	5	Yes	No	No	No	No	No	No
3	6	Yes	No	No	No	No	No	No
3	7	Yes	No	No	No	No	No	No
3	8	Yes	No	No	No	No	No	No
3	9	Yes	No	No	No	No	No	No
3	10	Yes	No	No	No	No	No	No
3	11	Yes	No	No	No	No	No	No
3	12	Yes	No	No	No	No	No	No
3	13	Yes	No	No	No	No	No	No
3	14	Yes	No	No	No	No	No	No
3	15	Yes	No	No	No	No	No	No
3	16	Yes	No	No	No	No	No	No
4	1	Yes	No	No	No	No	No	No
4	2	Yes	No	No	No	No	No	No
4	3	Yes	No	No	No	No	No	No

4	4	Yes	No	No	No	No	No	No
4	5	Yes	No	No	No	No	No	No
4	6	Yes	No	No	No	No	No	No
4	7	Yes	No	No	No	No	No	No
4	8	Yes	No	No	No	No	No	No
4	9	Yes	No	No	No	No	No	No
4	10	Yes	No	No	No	No	No	No
4	11	Yes	No	No	No	No	No	No
4	12	Yes	No	No	No	No	No	No
4	13	Yes	No	No	No	No	No	No
4	14	Yes	No	No	No	No	No	No
4	15	Yes	No	No	No	No	No	No
4	16	Yes	No	No	No	No	No	No

Milliken timing 082017 - Milliken @ 7th 111522

Coordination Options
Coordination Options (MM)3-1

Manual Pattern:	Auto
ECPI Coord:	Yes
System Source:	HDW
System Format:	STD
Splits In:	Percent
Offsets In:	Percent
Transition:	Smooth
Max Select:	MAXINH
Dwell/Add Time:	0
Dly Coord Wz-Lz:	No
Force Off:	Float
Offset Reference:	Lead
Use Ped Time:	Yes
Ped Recall:	No
Ped Resv:	No
Local Zero Ovrd:	No
Fo Add Ini Green:	No
Re-sync Count:	0
Multisync:	No

Split Demand (MM)3-5

Demand 1 Phase	Demand 2 Phase

Demand	Detector	Call Time	Cycle Count

Auto Perm Minimum Green (Seconds) (MM)3-4

Phase	Min Green

Milliken timing 082017 - Milliken @ 7th 111522

Coordination Pattern Data

Pattern Data (MM)3-2

Pattern	Split Pattern	TS2	Cycle	Std(COS)	Offset Value	Splits In	Offsets In	Actuated Coord
4	4	1-1	100	411	13	Percent	Percent	Yes
6	6	1-3	100	611	11	Percent	Percent	Yes
7	7	2-1	100	411	16	Percent	Percent	No
9	9	2-3	100	611	10	Percent	Percent	No

Pattern	Timing Plan	Actuated Walk Rest	Sequence	Phase Reservice	Action Plan	XArt Pattern	Vehicle Perm 1	Vehicle Perm 2	Vehicle Perm 3
4	1	No	0	No	4	0	0	0	0
6	1	No	0	No	6	0	0	0	0
7	0	No	0	No	0	0	0	0	0
9	0	No	0	No	0	0	0	0	0

Pattern	Ring Split Ext 1	Ring Split Ext 2	Ring Split Ext 3	Ring Split Ext 4	Split Demand Pattern 1	Split Demand Pattern 2	Ring Displ 2	Ring Displ 3	Ring Displ 4
4	0	0	0	0	0	0	0	0	0
6	0	0	0	0	0	0	0	0	0
7	0	0	0	0	0	0	0	0	0
9	0	0	0	0	0	0	0	0	0

Split Preference Phases

Pattern	Phase	Preference 1	Preference 2

Special Functions

Pattern	Function	Output

Split Pattern Data (MM)3-3

Coord Phases

Split Pattern	Phase	Split
4	1	14
4	2	27
4	3	14
4	4	45
4	5	14
4	6	27
4	7	14
4	8	45
6	1	14
6	2	24
6	3	20
6	4	42
6	5	14
6	6	24
6	7	19
6	8	43
7	1	17
7	2	51
7	4	32
7	5	17
7	6	51
7	8	32
9	1	15

Split/Modes

Split Pattern	Mode	Phase 1	2	3	4	5	6	7	8	9	10	11	12	13	14	15	16
4	Coord				X				X								
6	Coord				X				X								
7	Coord	X				X											
9	Coord	X				X											

9	2	55
9	4	30
9	5	15
9	6	55
9	8	30

Milliken timing 082017 - Milliken @ 7th 111522

Preemptor Preempt Plan (MM)4-1

Preempt Phases

Preempt	Phase	Track Clear Veh	Dwell Veh	Dwell Ped	Cycling Veh	Cycling Ped	Exit Phase	Exit Calls	Special Function
3	2	No	Yes	No	No	No	No	No	No
3	5	No	Yes	No	No	No	No	No	No
4	1	No	Yes	No	No	No	No	No	No
4	6	No	Yes	No	No	No	No	No	No
5	4	No	Yes	No	No	No	No	No	No
5	8	No	Yes	No	No	No	No	No	No
6	4	No	Yes	No	No	No	No	No	No
6	8	No	Yes	No	No	No	No	No	No

Preempt Overlaps

Preempt	Overlap	Track Clear	Enable Trailing	Dwell Overlap	Cycling Overlap
3	A	No	No	No	No
3	B	No	No	No	No
3	C	No	No	No	No
3	D	No	No	No	No
3	E	No	No	No	No
3	F	No	No	No	No
3	G	No	No	No	No
3	H	No	No	No	No
3	I	No	No	No	No
3	J	No	No	No	No
3	K	No	No	No	No
3	L	No	No	No	No
3	M	No	No	No	No
3	N	No	No	No	No
3	O	No	No	No	No
3	P	No	No	No	No
4	A	No	No	No	No
4	B	No	No	No	No
4	C	No	No	No	No
4	D	No	No	No	No
4	E	No	No	No	No
4	F	No	No	No	No
4	G	No	No	No	No
4	H	No	No	No	No
4	I	No	No	No	No
4	J	No	No	No	No
4	K	No	No	No	No
4	L	No	No	No	No
4	M	No	No	No	No
4	N	No	No	No	No
4	O	No	No	No	No
4	P	No	No	No	No
5	A	No	No	No	No
5	B	No	No	No	No
5	C	No	No	No	No
5	D	No	No	No	No
5	E	No	No	No	No
5	F	No	No	No	No
5	G	No	No	No	No
5	H	No	No	No	No

5	I	No	No	No	No
5	J	No	No	No	No
5	K	No	No	No	No
5	L	No	No	No	No
5	M	No	No	No	No
5	N	No	No	No	No
5	O	No	No	No	No
5	P	No	No	No	No
6	A	No	No	No	No
6	B	No	No	No	No
6	C	No	No	No	No
6	D	No	No	No	No
6	E	No	No	No	No
6	F	No	No	No	No
6	G	No	No	No	No
6	H	No	No	No	No
6	I	No	No	No	No
6	J	No	No	No	No
6	K	No	No	No	No
6	L	No	No	No	No
6	M	No	No	No	No
6	N	No	No	No	No
6	O	No	No	No	No
6	P	No	No	No	No

Preempt	Enable	Preempt Override	Interlock Enable	Detector Lock	Delay	Inhibit	Override Flash	Duration	CLR > GRN
1	No	Yes	No	Yes	0	0	No	0	No
2	No	Yes	No	Yes	0	0	No	0	No
3	Standard	No	No	No	0	0	No	10	No
4	Standard	No	No	No	0	0	No	10	No
5	Standard	No	No	No	0	0	No	10	No
6	Standard	No	No	No	0	0	No	10	No
7	No	Yes	No	Yes	0	0	No	0	No
8	No	Yes	No	Yes	0	0	No	0	No
9	No	Yes	No	Yes	0	0	No	0	No
10	No	Yes	No	Yes	0	0	No	0	No

Preempt	Term Overlap Asap	PC Through Yellow	Terminate Phase	Ped Dark	Track Clearance Re-service	Dwell Flash	Linked Pmt	Flash Exit Color	Preempt To Coord
1	No	No	No	No	No	Off	0	Green	No
2	No	No	No	No	No	Off	0	Green	No
3	No	No	No	No	No	Off	0	Green	No
4	No	No	No	No	No	Off	0	Green	No
5	No	No	No	No	No	Off	0	Green	No
6	No	No	No	No	No	Off	0	Green	No
7	No	No	No	No	No	Off	0	Green	No
8	No	No	No	No	No	Off	0	Green	No
9	No	No	No	No	No	Off	0	Green	No
10	No	No	No	No	No	Off	0	Green	No

Preempt	Exit Timing Plan	Reservice	Free During Pmt Ring 1	Free During Pmt Ring 2	Free During Pmt Ring 3	Free During Pmt Ring 4
1	0	0	No	No	No	No
2	0	0	No	No	No	No
3	0	0	No	No	No	No
4	0	0	No	No	No	No
5	0	0	No	No	No	No
6	0	0	No	No	No	No

7	0	0	No	No	No	No
8	0	0	No	No	No	No
9	0	0	No	No	No	No
10	0	0	No	No	No	No

Preempt	Entrance Walk	Entrance Ped Clear	Entrance Min Green	Entrance Yellow	Entrance Red	Track Clear Min Green	Gate Down Ext Green	Gate Down Max Green	Track Clear Yellow	Track Clear Red
1	0	255	5	4.0	1.0	0	0	0	4.0	1.0
2	0	255	5	4.0	1.0	0	0	0	4.0	1.0
3	0	255	5	25.5	25.5	0	0	0	25.5	25.5
4	0	255	5	25.5	25.5	0	0	0	25.5	25.5
5	0	255	5	25.5	25.5	0	0	0	25.5	25.5
6	0	255	5	25.5	25.5	0	0	0	25.5	25.5
7	0	255	5	4.0	1.0	0	0	0	4.0	1.0
8	0	255	5	4.0	1.0	0	0	0	4.0	1.0
9	0	255	5	4.0	1.0	0	0	0	4.0	1.0
10	0	255	5	4.0	1.0	0	0	0	4.0	1.0

Preempt	Min Dwell Time	Extend Preempt Input Time	Max Preempt Call Time	Exit Yellow Time	Exit Red Time	Preempt Active Out	Preempt Active Dwell	Other Priority Preempt	Non-Priority Preempt
1	0	0.0	0	4.0	1.0	On	No	Off	Off
2	0	0.0	0	4.0	1.0	On	No	Off	Off
3	10	0.0	60	25.5	25.5	Off	No	Off	Off
4	10	0.0	60	25.5	25.5	Off	No	Off	Off
5	10	0.0	60	25.5	25.5	Off	No	Off	Off
6	10	0.0	60	25.5	25.5	Off	No	Off	Off
7	0	0.0	0	4.0	1.0	On	No	Off	Off
8	0	0.0	0	4.0	1.0	On	No	Off	Off
9	0	0.0	0	4.0	1.0	On	No	Off	Off
10	0	0.0	0	4.0	1.0	On	No	Off	Off

Milliken timing 082017 - Milliken @ 7th 111522

Preemptor Preempt Filtering

Enable Preempt Filtering and TSP/SCP (MM)4-2

Input	Solid	Pulsing
3	Preemption -3	Preemption -7
4	Preemption -4	Preemption -8
5	Preemption -5	Preemption -9
6	Preemption -6	Preemption -10

Milliken timing 082017 - Milliken @ 7th 111522

Time Base Clock/Calendar

Clock/Calendar Options (MM)5-1

Enable Action Plan:	0
Sync Reference Time:	12:00 AM
Sync Reference:	Reference Time
Day Light Savings:	No
Time Reset Input Set Time:	3:30:00
Standard Time From GMT:	-8

Milliken timing 082017 - Milliken @ 7th 111522

Time Base Action Plan

Action Plan (MM)5-2

Plan	Pattern	Veh Det Plan	Flash	Red Reset	Controller Seq	Timing Plan	System Override	Detector Log	Veh Det Diag Plan	Ped Det Diag Plan	Dimming Enable
4	4	0	No	No	0	1	Yes	None	0	0	No
6	6	0	No	No	0	1	Yes	None	0	0	No
55	254 - FREE	0	No	No	0	1	Yes	None	0	0	No

Action Plan Phases

Plan	Phase	Red Rcl	Walk 2	Vex 2	Veh Rcl	Max Rcl	Max 2	Max 3	CS Inhibit	Omit

Acion Plan Special Functions

Plan	Function

Action Plan Auxiliary Functions

Plan	Function

Logic Statement Control

Plan	LP	Statement Control
1	1	E

Milliken timing 082017 - Milliken @ 7th 111522

Time Base Day Plan/Schedule

Day Plan (MM)5-3

Plan	Event	Action Plan	Start Time
1	1	7	6:30 AM
1	2	55	9:00 AM
1	3	9	3:45 PM
1	4	55	7:00 PM

Schedule (MM)5-4

Schedule Number	Day Plan Number	Months	Days of Week	Days of Month
1	1	Jan, Feb, Mar, Apr, May, Jun, Jul, Aug, Sept, Oct, Nov, Dec	Mon, Tues, Wed, Thurs, Fri	1, 2, 3, 4, 5, 6, 7, 8, 9, 10, 11, 12, 13, 14, 15, 16, 17, 18, 19, 20, 21, 22, 23, 24, 25, 26, 27, 28, 29, 30, 31

Milliken timing 082017 - Milliken @ 7th 111522

Time Base Exceptions

Exception Day Program (MM)5-5

Day	Fixed/Float	Month	Day of Week/Month	Week of Month/Year	Day Plan
1	FLOAT	0	0	0	0
2	FLOAT	0	0	0	0
3	FLOAT	0	0	0	0
4	FLOAT	0	0	0	0
5	FLOAT	0	0	0	0
6	FLOAT	0	0	0	0
7	FLOAT	0	0	0	0
8	FLOAT	0	0	0	0
9	FLOAT	0	0	0	0
10	FLOAT	0	0	0	0
11	FLOAT	0	0	0	0
12	FLOAT	0	0	0	0
13	FLOAT	0	0	0	0
14	FLOAT	0	0	0	0
15	FLOAT	0	0	0	0
16	FLOAT	0	0	0	0
17	FLOAT	0	0	0	0
18	FLOAT	0	0	0	0
19	FLOAT	0	0	0	0
20	FLOAT	0	0	0	0
21	FLOAT	0	0	0	0
22	FLOAT	0	0	0	0
23	FLOAT	0	0	0	0
24	FLOAT	0	0	0	0
25	FLOAT	0	0	0	0
26	FLOAT	0	0	0	0
27	FLOAT	0	0	0	0
28	FLOAT	0	0	0	0
29	FLOAT	0	0	0	0
30	FLOAT	0	0	0	0
31	FLOAT	0	0	0	0
32	FLOAT	0	0	0	0
33	FLOAT	0	0	0	0
34	FLOAT	0	0	0	0
35	FLOAT	0	0	0	0
36	FLOAT	0	0	0	0

Milliken timing 082017 - Milliken @ 7th 111522

Detectors

Detectors Page 1

Vehicle Detectors Setup (MM)6-1

Vehicle Plan	Detector Number	Called
1	1	2
1	2	2
1	3	2
1	4	2
1	5	6
1	6	6
1	7	5
1	8	5
1	9	1
1	10	1
1	11	6
1	12	6
1	13	4
1	14	4
1	15	2
1	16	6
1	27	8
1	28	8
2	1	2
4	1	4

Vehicle Detector Setup (MM)6-2 continued

Detector Number	ECPI	TS2 Detector	Detector Description

Vehicle Detector Setup (MM)6-2 continued

Detector Number	Vehicle Plan	Assigned Phase	Switch Phase	Extend Time	Delay Time	Queue Limit	Yellow Lock	Added Option	Call Option	Passage Option	Queue Option	NTCIP Occupancy	NTCIP Volume	ECPI Log	Red Lock
1	1	2	0	0.0	0.0	0	No	No	Yes	Yes	No	No	No	No	No
1	2	1	0	3.0	0.0	0	No	No	Yes	Yes	No	No	No	No	No
1	3	1	0	0.0	0.0	0	No	No	Yes	Yes	No	No	No	No	No
1	4	1	0	0.0	0.0	0	No	No	Yes	Yes	No	No	No	No	No
2	1	2	0	0.0	0.0	0	No	No	Yes	Yes	No	No	No	No	No
2	2	2	0	0.0	0.0	0	No	No	Yes	Yes	No	No	No	No	No
2	3	2	0	0.0	0.0	0	No	No	Yes	Yes	No	No	No	No	No
2	4	2	0	0.0	0.0	0	No	No	Yes	Yes	No	No	No	No	No
3	1	2	0	0.0	0.0	0	No	No	Yes	Yes	No	No	No	No	No
3	2	3	0	0.0	0.0	0	No	No	Yes	Yes	No	No	No	No	No
3	3	3	0	0.0	0.0	0	No	No	Yes	Yes	No	No	No	No	No
3	4	3	0	0.0	0.0	0	No	No	Yes	Yes	No	No	No	No	No
4	1	2	0	0.0	0.0	0	No	No	Yes	Yes	No	No	No	No	No
4	2	4	0	0.0	0.0	0	No	No	Yes	Yes	No	No	No	No	No
4	3	4	0	0.0	0.0	0	No	No	Yes	Yes	No	No	No	No	No
4	4	4	0	0.0	0.0	0	No	No	Yes	Yes	No	No	No	No	No
5	1	6	0	0.0	0.0	0	No	No	Yes	Yes	No	No	No	No	No
5	2	5	0	0.0	0.0	0	No	No	Yes	Yes	No	No	No	No	No
5	3	5	0	0.0	0.0	0	No	No	Yes	Yes	No	No	No	No	No
5	4	5	0	0.0	0.0	0	No	No	Yes	Yes	No	No	No	No	No
6	1	6	0	0.0	0.0	0	No	No	Yes	Yes	No	No	No	No	No
6	2	6	0	0.0	0.0	0	No	No	Yes	Yes	No	No	No	No	No
6	3	6	0	0.0	0.0	0	No	No	Yes	Yes	No	No	No	No	No
6	4	6	0	0.0	0.0	0	No	No	Yes	Yes	No	No	No	No	No
7	1	5	0	0.0	0.0	0	No	No	Yes	Yes	No	No	No	No	No
7	2	7	0	0.0	0.0	0	No	No	Yes	Yes	No	No	No	No	No
7	3	7	0	0.0	0.0	0	No	No	Yes	Yes	No	No	No	No	No
7	4	7	0	0.0	0.0	0	No	No	Yes	Yes	No	No	No	No	No
8	1	5	0	0.0	0.0	0	No	No	Yes	Yes	No	No	No	No	No
8	2	8	0	0.0	0.0	0	No	No	Yes	Yes	No	No	No	No	No
8	3	8	0	0.0	0.0	0	No	No	Yes	Yes	No	No	No	No	No
8	4	8	0	0.0	0.0	0	No	No	Yes	Yes	No	No	No	No	No
9	1	1	0	0.0	0.0	0	No	No	Yes	Yes	No	No	No	No	No
9	2	9	0	0.0	0.0	0	No	No	Yes	Yes	No	No	No	No	No
9	3	9	0	0.0	0.0	0	No	No	Yes	Yes	No	No	No	No	No
9	4	9	0	0.0	0.0	0	No	No	Yes	Yes	No	No	No	No	No
10	1	1	0	0.0	0.0	0	No	No	Yes	Yes	No	No	No	No	No
10	2	10	0	0.0	0.0	0	No	No	Yes	Yes	No	No	No	No	No
10	3	10	0	0.0	0.0	0	No	No	Yes	Yes	No	No	No	No	No
10	4	10	0	0.0	0.0	0	No	No	Yes	Yes	No	No	No	No	No
11	1	6	0	0.0	0.0	0	No	No	Yes	Yes	No	No	No	No	No
11	2	11	0	0.0	0.0	0	No	No	Yes	Yes	No	No	No	No	No
11	3	11	0	0.0	0.0	0	No	No	Yes	Yes	No	No	No	No	No
11	4	11	0	0.0	0.0	0	No	No	Yes	Yes	No	No	No	No	No
12	1	6	0	0.0	0.0	0	No	No	Yes	Yes	No	No	No	No	No
12	2	12	0	0.0	0.0	0	No	No	Yes	Yes	No	No	No	No	No
12	3	12	0	0.0	0.0	0	No	No	Yes	Yes	No	No	No	No	No
12	4	12	0	0.0	0.0	0	No	No	Yes	Yes	No	No	No	No	No
13	1	4	0	0.0	0.0	0	No	No	Yes	Yes	No	No	No	No	No
13	2	13	0	0.0	0.0	0	No	No	Yes	Yes	No	No	No	No	No
13	3	13	0	0.0	0.0	0	No	No	Yes	Yes	No	No	No	No	No
13	4	13	0	0.0	0.0	0	No	No	Yes	Yes	No	No	No	No	No

14	1	4	0	0.0	0.0	0	No	No	Yes	Yes	No	No	No	No	No
14	2	14	0	0.0	0.0	0	No	No	Yes	Yes	No	No	No	No	No
14	3	14	0	0.0	0.0	0	No	No	Yes	Yes	No	No	No	No	No
14	4	14	0	0.0	0.0	0	No	No	Yes	Yes	No	No	No	No	No
15	1	2	0	0.0	0.0	0	No	No	Yes	Yes	No	No	No	No	No
15	2	15	0	0.0	0.0	0	No	No	Yes	Yes	No	No	No	No	No
15	3	15	0	0.0	0.0	0	No	No	Yes	Yes	No	No	No	No	No
15	4	15	0	0.0	0.0	0	No	No	Yes	Yes	No	No	No	No	No
16	1	6	0	0.0	0.0	0	No	No	Yes	Yes	No	No	No	No	No
16	2	16	0	0.0	0.0	0	No	No	Yes	Yes	No	No	No	No	No
16	3	16	0	0.0	0.0	0	No	No	Yes	Yes	No	No	No	No	No
16	4	16	0	0.0	0.0	0	No	No	Yes	Yes	No	No	No	No	No
27	1	8	0	0.0	0.0	0	No	No	Yes	Yes	No	No	No	No	No
28	1	8	0	0.0	0.0	0	No	No	Yes	Yes	No	No	No	No	No

Ped and System Detector Options
(MM)6-4

Phase Ped Detector

Local Ped Detector	Number
1	1
2	2
3	3
4	4
5	5
6	6
7	7
8	8
9	9
10	10
11	11
12	12
13	13
14	14
15	15
16	16

Local System Detector

Local System Detector	Number

Milliken timing 082017 - Milliken @ 7th 111522

Detectors

Detectors Page 2

Log - Speed Detector Setup (MM)6-5

NTCIP Log Period: 0	ECPI Log Period: TBAP	Length Unit: Inch

Speed Detector	Local Detector	One/Two Detector	Vehicle Length	Trap Length	Enable Log
1	0	1	0	0	No
2	0	1	0	0	No
3	0	1	0	0	No
4	0	1	0	0	No
5	0	1	0	0	No
6	0	1	0	0	No
7	0	1	0	0	No
8	0	1	0	0	No
9	0	1	0	0	No
10	0	1	0	0	No
11	0	1	0	0	No
12	0	1	0	0	No
13	0	1	0	0	No
14	0	1	0	0	No
15	0	1	0	0	No
16	0	1	0	0	No

Vehicle Detector Diagnostics (MM)6-6

Plan	Detector	Counts	Act	Pres	Multiplier	Failed Time	Failed Call Delay
1	1	0	0	0	1	255	0
1	2	0	0	0	1	255	0
1	3	0	0	0	1	255	0
1	4	0	0	0	1	255	0
1	5	0	0	0	1	255	0
1	6	0	0	0	1	255	0
1	7	0	0	0	1	255	0
1	8	0	0	0	1	255	0
1	9	0	0	0	1	255	0
1	10	0	0	0	1	255	0
1	11	0	0	0	1	255	0
1	12	0	0	0	1	255	0
1	13	0	0	0	1	255	0
1	14	0	0	0	1	255	0
1	15	0	0	0	1	255	0
1	16	0	0	0	1	255	0
1	17	0	0	0	1	255	0
1	18	0	0	0	1	255	0
1	19	0	0	0	1	255	0
1	20	0	0	0	1	255	0
1	21	0	0	0	1	255	0
1	22	0	0	0	1	255	0
1	23	0	0	0	1	255	0
1	24	0	0	0	1	255	0
1	25	0	0	0	1	255	0
1	26	0	0	0	1	255	0
1	27	0	0	0	1	255	0
1	28	0	0	0	1	255	0

1	29	0	0	0	1	255	0
1	30	0	0	0	1	255	0
1	31	0	0	0	1	255	0
1	32	0	0	0	1	255	0
1	33	0	0	0	1	255	0
1	34	0	0	0	1	255	0
1	35	0	0	0	1	255	0
1	36	0	0	0	1	255	0
1	37	0	0	0	1	255	0
1	38	0	0	0	1	255	0
1	39	0	0	0	1	255	0
1	40	0	0	0	1	255	0
1	41	0	0	0	1	255	0
1	42	0	0	0	1	255	0
1	43	0	0	0	1	255	0
1	44	0	0	0	1	255	0
1	45	0	0	0	1	255	0
1	46	0	0	0	1	255	0
1	47	0	0	0	1	255	0
1	48	0	0	0	1	255	0
1	49	0	0	0	1	255	0
1	50	0	0	0	1	255	0
1	51	0	0	0	1	255	0
1	52	0	0	0	1	255	0
1	53	0	0	0	1	255	0
1	54	0	0	0	1	255	0
1	55	0	0	0	1	255	0
1	56	0	0	0	1	255	0
1	57	0	0	0	1	255	0
1	58	0	0	0	1	255	0
1	59	0	0	0	1	255	0
1	60	0	0	0	1	255	0
1	61	0	0	0	1	255	0
1	62	0	0	0	1	255	0
1	63	0	0	0	1	255	0
1	64	0	0	0	1	255	0
2	1	0	0	0	1	255	0
2	2	0	0	0	1	255	0
2	3	0	0	0	1	255	0
2	4	0	0	0	1	255	0
2	5	0	0	0	1	255	0
2	6	0	0	0	1	255	0
2	7	0	0	0	1	255	0
2	8	0	0	0	1	255	0
2	9	0	0	0	1	255	0
2	10	0	0	0	1	255	0
2	11	0	0	0	1	255	0
2	12	0	0	0	1	255	0
2	13	0	0	0	1	255	0
2	14	0	0	0	1	255	0
2	15	0	0	0	1	255	0
2	16	0	0	0	1	255	0
2	17	0	0	0	1	255	0
2	18	0	0	0	1	255	0
2	19	0	0	0	1	255	0
2	20	0	0	0	1	255	0
2	21	0	0	0	1	255	0
2	22	0	0	0	1	255	0
2	23	0	0	0	1	255	0
2	24	0	0	0	1	255	0

2	25	0	0	0	1	255	0
2	26	0	0	0	1	255	0
2	27	0	0	0	1	255	0
2	28	0	0	0	1	255	0
2	29	0	0	0	1	255	0
2	30	0	0	0	1	255	0
2	31	0	0	0	1	255	0
2	32	0	0	0	1	255	0
2	33	0	0	0	1	255	0
2	34	0	0	0	1	255	0
2	35	0	0	0	1	255	0
2	36	0	0	0	1	255	0
2	37	0	0	0	1	255	0
2	38	0	0	0	1	255	0
2	39	0	0	0	1	255	0
2	40	0	0	0	1	255	0
2	41	0	0	0	1	255	0
2	42	0	0	0	1	255	0
2	43	0	0	0	1	255	0
2	44	0	0	0	1	255	0
2	45	0	0	0	1	255	0
2	46	0	0	0	1	255	0
2	47	0	0	0	1	255	0
2	48	0	0	0	1	255	0
2	49	0	0	0	1	255	0
2	50	0	0	0	1	255	0
2	51	0	0	0	1	255	0
2	52	0	0	0	1	255	0
2	53	0	0	0	1	255	0
2	54	0	0	0	1	255	0
2	55	0	0	0	1	255	0
2	56	0	0	0	1	255	0
2	57	0	0	0	1	255	0
2	58	0	0	0	1	255	0
2	59	0	0	0	1	255	0
2	60	0	0	0	1	255	0
2	61	0	0	0	1	255	0
2	62	0	0	0	1	255	0
2	63	0	0	0	1	255	0
2	64	0	0	0	1	255	0
3	1	0	0	0	1	255	0
3	2	0	0	0	1	255	0
3	3	0	0	0	1	255	0
3	4	0	0	0	1	255	0
3	5	0	0	0	1	255	0
3	6	0	0	0	1	255	0
3	7	0	0	0	1	255	0
3	8	0	0	0	1	255	0
3	9	0	0	0	1	255	0
3	10	0	0	0	1	255	0
3	11	0	0	0	1	255	0
3	12	0	0	0	1	255	0
3	13	0	0	0	1	255	0
3	14	0	0	0	1	255	0
3	15	0	0	0	1	255	0
3	16	0	0	0	1	255	0
3	17	0	0	0	1	255	0
3	18	0	0	0	1	255	0
3	19	0	0	0	1	255	0
3	20	0	0	0	1	255	0

3	21	0	0	0	1	255	0
3	22	0	0	0	1	255	0
3	23	0	0	0	1	255	0
3	24	0	0	0	1	255	0
3	25	0	0	0	1	255	0
3	26	0	0	0	1	255	0
3	27	0	0	0	1	255	0
3	28	0	0	0	1	255	0
3	29	0	0	0	1	255	0
3	30	0	0	0	1	255	0
3	31	0	0	0	1	255	0
3	32	0	0	0	1	255	0
3	33	0	0	0	1	255	0
3	34	0	0	0	1	255	0
3	35	0	0	0	1	255	0
3	36	0	0	0	1	255	0
3	37	0	0	0	1	255	0
3	38	0	0	0	1	255	0
3	39	0	0	0	1	255	0
3	40	0	0	0	1	255	0
3	41	0	0	0	1	255	0
3	42	0	0	0	1	255	0
3	43	0	0	0	1	255	0
3	44	0	0	0	1	255	0
3	45	0	0	0	1	255	0
3	46	0	0	0	1	255	0
3	47	0	0	0	1	255	0
3	48	0	0	0	1	255	0
3	49	0	0	0	1	255	0
3	50	0	0	0	1	255	0
3	51	0	0	0	1	255	0
3	52	0	0	0	1	255	0
3	53	0	0	0	1	255	0
3	54	0	0	0	1	255	0
3	55	0	0	0	1	255	0
3	56	0	0	0	1	255	0
3	57	0	0	0	1	255	0
3	58	0	0	0	1	255	0
3	59	0	0	0	1	255	0
3	60	0	0	0	1	255	0
3	61	0	0	0	1	255	0
3	62	0	0	0	1	255	0
3	63	0	0	0	1	255	0
3	64	0	0	0	1	255	0
4	1	0	0	0	1	255	0
4	2	0	0	0	1	255	0
4	3	0	0	0	1	255	0
4	4	0	0	0	1	255	0
4	5	0	0	0	1	255	0
4	6	0	0	0	1	255	0
4	7	0	0	0	1	255	0
4	8	0	0	0	1	255	0
4	9	0	0	0	1	255	0
4	10	0	0	0	1	255	0
4	11	0	0	0	1	255	0
4	12	0	0	0	1	255	0
4	13	0	0	0	1	255	0
4	14	0	0	0	1	255	0
4	15	0	0	0	1	255	0
4	16	0	0	0	1	255	0

4	17	0	0	0	1	255	0
4	18	0	0	0	1	255	0
4	19	0	0	0	1	255	0
4	20	0	0	0	1	255	0
4	21	0	0	0	1	255	0
4	22	0	0	0	1	255	0
4	23	0	0	0	1	255	0
4	24	0	0	0	1	255	0
4	25	0	0	0	1	255	0
4	26	0	0	0	1	255	0
4	27	0	0	0	1	255	0
4	28	0	0	0	1	255	0
4	29	0	0	0	1	255	0
4	30	0	0	0	1	255	0
4	31	0	0	0	1	255	0
4	32	0	0	0	1	255	0
4	33	0	0	0	1	255	0
4	34	0	0	0	1	255	0
4	35	0	0	0	1	255	0
4	36	0	0	0	1	255	0
4	37	0	0	0	1	255	0
4	38	0	0	0	1	255	0
4	39	0	0	0	1	255	0
4	40	0	0	0	1	255	0
4	41	0	0	0	1	255	0
4	42	0	0	0	1	255	0
4	43	0	0	0	1	255	0
4	44	0	0	0	1	255	0
4	45	0	0	0	1	255	0
4	46	0	0	0	1	255	0
4	47	0	0	0	1	255	0
4	48	0	0	0	1	255	0
4	49	0	0	0	1	255	0
4	50	0	0	0	1	255	0
4	51	0	0	0	1	255	0
4	52	0	0	0	1	255	0
4	53	0	0	0	1	255	0
4	54	0	0	0	1	255	0
4	55	0	0	0	1	255	0
4	56	0	0	0	1	255	0
4	57	0	0	0	1	255	0
4	58	0	0	0	1	255	0
4	59	0	0	0	1	255	0
4	60	0	0	0	1	255	0
4	61	0	0	0	1	255	0
4	62	0	0	0	1	255	0
4	63	0	0	0	1	255	0
4	64	0	0	0	1	255	0

Pedestrian Detector Diagnotics (MM)6-7

Plan	Detector	Counts	Act	Pres	Multiplier

Milliken/Foothill - Milliken @ 6th 110322

Configuration Phase Sequence Page 1

Phase Ring (MM)1-1-1

Phase															
1	2	3	4	5	6	7	8	9	10	11	12	13	14	15	16
1	1	1	1	2	2	2	2	1	1	2	2	1	1	2	2

Hardware Alternate Sequence Enable: No

Phase Ring Sequence

Sequence	Ring	Phase															
		1	2	3	4	5	6	7	8	9	10	11	12	13	14	15	16
	Barrier Mode	B		B		B		B		B							
1	1	1	2	3	4	9	10	13	14	0	0	0	0	0	0	0	0
1	2	5	6	7	8	11	12	15	16	0	0	0	0	0	0	0	0
2	1	2	1	3	4	10	9	13	14	0	0	0	0	0	0	0	0
2	2	5	6	7	8	11	12	15	16	0	0	0	0	0	0	0	0
3	1	1	2	4	3	9	10	14	13	0	0	0	0	0	0	0	0
3	2	5	6	7	8	11	12	15	16	0	0	0	0	0	0	0	0
4	1	2	1	4	3	10	9	14	13	0	0	0	0	0	0	0	0
4	2	5	6	7	8	11	12	15	16	0	0	0	0	0	0	0	0
5	1	1	2	3	4	9	10	13	14	0	0	0	0	0	0	0	0
5	2	6	5	7	8	12	11	15	16	0	0	0	0	0	0	0	0
6	1	2	1	3	4	10	9	13	14	0	0	0	0	0	0	0	0
6	2	6	5	7	8	12	11	15	16	0	0	0	0	0	0	0	0
7	1	1	2	4	3	9	10	14	13	0	0	0	0	0	0	0	0
7	2	6	5	7	8	12	11	15	16	0	0	0	0	0	0	0	0
8	1	2	1	4	3	10	9	14	13	0	0	0	0	0	0	0	0
8	2	6	5	7	8	12	11	15	16	0	0	0	0	0	0	0	0
9	1	1	2	3	4	9	10	13	14	0	0	0	0	0	0	0	0
9	2	5	6	8	7	11	12	16	15	0	0	0	0	0	0	0	0
10	1	2	1	3	4	10	9	13	14	0	0	0	0	0	0	0	0
10	2	5	6	8	7	11	12	16	15	0	0	0	0	0	0	0	0
11	1	1	2	4	3	9	10	14	13	0	0	0	0	0	0	0	0
11	2	5	6	8	7	11	12	16	15	0	0	0	0	0	0	0	0
12	1	2	1	4	3	10	9	14	13	0	0	0	0	0	0	0	0
12	2	5	6	8	7	11	12	16	15	0	0	0	0	0	0	0	0
13	1	1	2	3	4	9	10	13	14	0	0	0	0	0	0	0	0
13	2	6	5	8	7	12	11	16	15	0	0	0	0	0	0	0	0
14	1	2	1	3	4	10	9	13	14	0	0	0	0	0	0	0	0
14	2	6	5	8	7	12	11	16	15	0	0	0	0	0	0	0	0
15	1	1	2	4	3	9	10	14	13	0	0	0	0	0	0	0	0
15	2	6	5	8	7	12	11	16	15	0	0	0	0	0	0	0	0
16	1	2	1	4	3	10	9	14	13	0	0	0	0	0	0	0	0
16	2	6	5	8	7	12	11	16	15	0	0	0	0	0	0	0	0

Phase Compatibility (MM)1-1-2

Phase 1	Phase 2
1	5
1	6
2	5
2	6
3	7
3	8
4	7
4	8
9	11
9	12
10	11
10	12
13	15
13	16
14	15
14	16

Phase Direction Descriptions

Phase Description

Overlap Direction Descriptions

Overlap Description

Administration (MM)1-7-1
Enable CRC Check: No
CRC: 0000
Request Download Program Data: No
Enable Automatic Backup to Datakey: No

Milliken/Foothill - Milliken @ 6th 110322

Configuration Phase Sequence Page 2

In Use(MM)1-2 Phases In Use	Exclusive Ped(MM)1-2 Phase	Backup Prevent(MM)1-1-3 Phase Timing Phase Backup	Simultaneous Gap(MM)1-1-4 Phase	Must Gap with Phase	Disable(MM)1-1-4 Phase
1					
2					
3					
4					
5					
6					
7					
8					

Load Switch Assignments (MMU Channel) (MM)1-3

Phase	Overlap	Type	Dim R	Y	G	D	Auto R	Y	Flash Together
1	1	V				+	Yes		
2	2	V				+	Yes		Yes
3	3	V				+	Yes		
4	4	V				+	Yes		Yes
5	5	V				-	Yes		
6	6	V				-	Yes		Yes
7	7	V				-	Yes		
8	8	V				-	Yes		Yes
9	2	P				+			
10	4	P				+			
11	6	P				-			
12	8	P				-			
13	0					-			
14	0					-			
15	0					-			
16	0					-			

Milliken/Foothill - Milliken @ 6th 110322

Configuration Port 1 (SDLC)

SDLC Options (MM)1-4-1

Bus Interface Terminal/Facilities

BIU	Term and Facility Enable	Detector Rack Enable
1	No	Yes
2	No	Yes
3	No	No
4	No	No
5	No	No
6	No	No
7	No	No
8	No	No

Enable TS2/MMU Type Cabinet: No
Enable MMU Extended Status: No
Enable SDLC Stop Time: No
Enable 3 Critical RFE's Lockup: No
MMU To CU SDLC External Start: Enabled
Diagonstics (Test Fixture) Enable: No

Secondary To Secondary Addressing

ID	Term and Facility Enable	Detector Rack Enable
1	No	No
2	No	No
3	No	No
4	No	No
5	No	No
6	No	No
7	No	No
8	No	No

Secondary To Secondary Addressing MMU: No
Secondary To Secondary Addressing Diagonstics: No

MMU Program (MM)1-4-2

Channel Can Serve with Channel

Channel 1	Channel 2

Color Check Enable (MM)1-4-3
Enable Color Check: Yes

Color Check Enable

MMU Channel	Green	Yellow	Red
1	Yes	Yes	Yes
2	Yes	Yes	Yes
3	Yes	Yes	Yes
4	Yes	Yes	Yes
5	Yes	Yes	Yes
6	Yes	Yes	Yes
7	Yes	Yes	Yes
8	Yes	Yes	Yes
9	Yes	No	Yes
10	Yes	No	Yes

11	Yes	No	Yes
12	Yes	No	Yes

Milliken/Foothill - Milliken @ 6th 110322

Configuration Communications

Ethernet Port Configuration (MM)1-5-1

Controller IP:	10.204.25.50
Subnet Mask:	255.255.255.192
Default Gateway IP:	10.204.25.1
Server IP:	10.10.51.10

NTCIP Parameters (MM)1-5-5

Backup Time:	0
UDP Port:	501
Ethernet Priority:	1
Port 2 Priority:	4
Port 3A Priority:	2
Port 3B Priority:	3

Note for 2070: Port 2 is C50S, Port 3A is C21S, and Port 3B is C22S

Port Configuration (MM)1-5-2 to 1-5-4

Port	Protocol	Enable	Data Rate	Data Parity Stop	Modem Setup String	User String	Comm Port Address	System Detector 9-1	Telemetry Response Delay	Duplex Half/Full	Flow Control	AB3418 NTCIP Group Address	AB3418 NTCIP Single Flag Enable	RTS to CTS Delay	RTS Turn Off Delay	Droupout Time	Early RTS	FSK Hardware
2	NTCIP	Yes	9600	8 N 1	None		1	0	0.0	Full	Yes	0	No	0.0	0.0	10	No	Yes
3A	ECPIP	No	1200	8 0 1	None		0	0	0.1	Full	Yes	0	No	0.0	0.0	10	No	Yes
3B	ECPIP	No	1200	8 0 1	None		0	0	0.0	Full	Yes	0	No	4.5	3.5	10	No	Yes

ECPIP Parameters (MM)1-5-6

Expanded System Detector Address: 0

Local System Detector

Local System Detector	Number

Milliken/Foothill - Milliken @ 6th 110322

Configuration Logging/Display

Enable Event Logs (MM)1-6-1		**Alarm Logs (MM)1-6-1**	**Display Options (MM)1-7-2**
Critical RFE's:	Yes	Enabled: 1 2 15 16	Key Click Enable: Yes
3 Critical RFE's in 24 Hours:	Yes		Backlight Enable: Yes
MMU Flash Faults:	Yes		
Local Flash Faults:	Yes		
Non-Critical RFE's (Det/Test):	Yes		
Detector Errors:	Yes		
Coordination Errors:	Yes		
Controller Download:	Yes		
Preempt:	Yes		
TSP:	Yes		
Power On/Off:	Yes		
Low Battery:	Yes		
Access:	Yes		
Data Change:	Yes		

Milliken/Foothill - Milliken @ 6th 110322

Logic Processor Page 1

Statement Control (MM)1-8-1

LP Statement Control

Milliken/Foothill - Milliken @ 6th 110322

Logic Processor Page 2

Logic Statements (MM)1-8-2

Milliken/Foothill - Milliken @ 6th 110322

Controller Timing Plan (MM)2-1

Plan 1

Phase	1	2	3	4	5	6	7	8	9	10	11	12	13	14	15	16
Min Green	5	10	5	10	5	10	5	10	5	5	5	5	5	5	5	5
BK Min Green	7	7	7	7	7	7	7	7	0	0	0	0	0	0	0	0
CS Min Green	0	0	0	0	0	0	0	0	0	0	0	0	0	0	0	0
Delay Green	0	0	0	0	0	0	0	0	0	0	0	0	0	0	0	0
Walk	0	10	0	10	0	10	0	10	0	10	0	10	0	10	0	10
Walk 2	0	0	0	0	0	0	0	0	0	0	0	0	0	0	0	0
Walk Max	0	0	0	0	0	0	0	0	0	0	0	0	0	0	0	0
Ped Clear	0	20	0	23	0	22	0	20	0	16	0	16	0	16	0	16
Ped Clear 2	0	0	0	0	0	0	0	0	0	0	0	0	0	0	0	0
Ped Clear Max	0	0	0	0	0	0	0	0	0	0	0	0	0	0	0	0
Ped CO	0	0	0	0	0	0	0	0	0	0	0	0	0	0	0	0
Vehicle Ext	3.0	3.0	3.0	3.0	3.0	3.0	3.0	3.0	5.0	5.0	5.0	5.0	5.0	5.0	5.0	5.0
Vehicle Ext 2	0.0	0.0	0.0	0.0	0.0	0.0	0.0	0.0	0.0	0.0	0.0	0.0	0.0	0.0	0.0	0.0
Max 1	15	40	15	30	15	40	15	30	35	35	35	35	35	35	35	35
Max 2	20	45	20	35	20	45	20	35	40	40	40	40	40	40	40	40
Max 3	0	0	0	0	0	0	0	0	0	0	0	0	0	0	0	0
DYM Max	0	0	0	0	0	0	0	0	0	0	0	0	0	0	0	0
DYM Stp	0.0	0.0	0.0	0.0	0.0	0.0	0.0	0.0	0.0	0.0	0.0	0.0	0.0	0.0	0.0	0.0
Yellow	3.0	4.9	3.0	4.3	3.0	4.9	3.0	4.3	3.0	3.0	3.0	3.0	3.0	3.0	3.0	3.0
Red Clear	1.0	2.1	1.0	2.3	1.0	2.1	1.0	2.3	1.0	1.0	1.0	1.0	1.0	1.0	1.0	1.0
Red Max	0.0	0.0	0.0	0.0	0.0	0.0	0.0	0.0	0.0	0.0	0.0	0.0	0.0	0.0	0.0	0.0
Red Revert	2.0	2.0	2.0	2.0	2.0	2.0	2.0	2.0	2.0	2.0	2.0	2.0	2.0	2.0	2.0	2.0
ACT B4	0	0	0	0	0	0	0	0	0	0	0	0	0	0	0	0
SEC/ACT	0.0	0.0	0.0	0.0	0.0	0.0	0.0	0.0	0.0	0.0	0.0	0.0	0.0	0.0	0.0	0.0
Max Int	0	0	0	0	0	0	0	0	0	0	0	0	0	0	0	0
Time B4	0	0	0	0	0	0	0	0	0	0	0	0	0	0	0	0
Cars Wt	0	0	0	0	0	0	0	0	0	0	0	0	0	0	0	0
STPT Duc	0.0	0.0	0.0	0.0	0.0	0.0	0.0	0.0	0.0	0.0	0.0	0.0	0.0	0.0	0.0	0.0
Time To Reduce	0	0	0	0	0	0	0	0	0	0	0	0	0	0	0	0
Min Gap	0.0	0.0	0.0	0.0	0.0	0.0	0.0	0.0	0.0	0.0	0.0	0.0	0.0	0.0	0.0	0.0

Plan 2

Phase	1	2	3	4	5	6	7	8	9	10	11	12	13	14	15	16
Min Green	5	5	5	5	5	5	5	5	5	5	5	5	5	5	5	5
BK Min Green	0	0	0	0	0	0	0	0	0	0	0	0	0	0	0	0
CS Min Green	0	0	0	0	0	0	0	0	0	0	0	0	0	0	0	0
Delay Green	0	0	0	0	0	0	0	0	0	0	0	0	0	0	0	0
Walk	0	10	0	10	0	10	0	10	0	10	0	10	0	10	0	10
Walk 2	0	0	0	0	0	0	0	0	0	0	0	0	0	0	0	0
Walk Max	0	0	0	0	0	0	0	0	0	0	0	0	0	0	0	0
Ped Clear	0	16	0	16	0	16	0	16	0	16	0	16	0	16	0	16
Ped Clear 2	0	0	0	0	0	0	0	0	0	0	0	0	0	0	0	0
Ped Clear Max	0	0	0	0	0	0	0	0	0	0	0	0	0	0	0	0
Ped CO	0	0	0	0	0	0	0	0	0	0	0	0	0	0	0	0
Vehicle Ext	5.0	5.0	5.0	5.0	5.0	5.0	5.0	5.0	5.0	5.0	5.0	5.0	5.0	5.0	5.0	5.0
Vehicle Ext 2	0.0	0.0	0.0	0.0	0.0	0.0	0.0	0.0	0.0	0.0	0.0	0.0	0.0	0.0	0.0	0.0
Max 1	35	35	35	35	35	35	35	35	35	35	35	35	35	35	35	35
Max 2	40	40	40	40	40	40	40	40	40	40	40	40	40	40	40	40
Max 3	0	0	0	0	0	0	0	0	0	0	0	0	0	0	0	0
DYM Max	0	0	0	0	0	0	0	0	0	0	0	0	0	0	0	0
DYM Stp	0.0	0.0	0.0	0.0	0.0	0.0	0.0	0.0	0.0	0.0	0.0	0.0	0.0	0.0	0.0	0.0
Yellow	3.0	3.0	3.0	3.0	3.0	3.0	3.0	3.0	3.0	3.0	3.0	3.0	3.0	3.0	3.0	3.0
Red Clear	1.0	1.0	1.0	1.0	1.0	1.0	1.0	1.0	1.0	1.0	1.0	1.0	1.0	1.0	1.0	1.0
Red Max	0.0	0.0	0.0	0.0	0.0	0.0	0.0	0.0	0.0	0.0	0.0	0.0	0.0	0.0	0.0	0.0
Red Revert	2.0	2.0	2.0	2.0	2.0	2.0	2.0	2.0	2.0	2.0	2.0	2.0	2.0	2.0	2.0	2.0
ACT B4	0	0	0	0	0	0	0	0	0	0	0	0	0	0	0	0
SEC/ACT	0.0	0.0	0.0	0.0	0.0	0.0	0.0	0.0	0.0	0.0	0.0	0.0	0.0	0.0	0.0	0.0
Max Int	0	0	0	0	0	0	0	0	0	0	0	0	0	0	0	0
Time B4	0	0	0	0	0	0	0	0	0	0	0	0	0	0	0	0
Cars Wt	0	0	0	0	0	0	0	0	0	0	0	0	0	0	0	0
STPT Duc	0.0	0.0	0.0	0.0	0.0	0.0	0.0	0.0	0.0	0.0	0.0	0.0	0.0	0.0	0.0	0.0
Time To Reduce	0	0	0	0	0	0	0	0	0	0	0	0	0	0	0	0
Min Gap	0.0	0.0	0.0	0.0	0.0	0.0	0.0	0.0	0.0	0.0	0.0	0.0	0.0	0.0	0.0	0.0

Plan 3

Phase	1	2	3	4	5	6	7	8	9	10	11	12	13	14	15	16
Min Green	5	5	5	5	5	5	5	5	5	5	5	5	5	5	5	5
BK Min Green	0	0	0	0	0	0	0	0	0	0	0	0	0	0	0	0
CS Min Green	0	0	0	0	0	0	0	0	0	0	0	0	0	0	0	0
Delay Green	0	0	0	0	0	0	0	0	0	0	0	0	0	0	0	0
Walk	0	10	0	10	0	10	0	10	0	10	0	10	0	10	0	10
Walk 2	0	0	0	0	0	0	0	0	0	0	0	0	0	0	0	0
Walk Max	0	0	0	0	0	0	0	0	0	0	0	0	0	0	0	0
Ped Clear	0	16	0	16	0	16	0	16	0	16	0	16	0	16	0	16
Ped Clear 2	0	0	0	0	0	0	0	0	0	0	0	0	0	0	0	0
Ped Clear Max	0	0	0	0	0	0	0	0	0	0	0	0	0	0	0	0
Ped CO	0	0	0	0	0	0	0	0	0	0	0	0	0	0	0	0
Vehicle Ext	5.0	5.0	5.0	5.0	5.0	5.0	5.0	5.0	5.0	5.0	5.0	5.0	5.0	5.0	5.0	5.0
Vehicle Ext 2	0.0	0.0	0.0	0.0	0.0	0.0	0.0	0.0	0.0	0.0	0.0	0.0	0.0	0.0	0.0	0.0
Max 1	35	35	35	35	35	35	35	35	35	35	35	35	35	35	35	35
Max 2	40	40	40	40	40	40	40	40	40	40	40	40	40	40	40	40
Max 3	0	0	0	0	0	0	0	0	0	0	0	0	0	0	0	0
DYM Max	0	0	0	0	0	0	0	0	0	0	0	0	0	0	0	0
DYM Stp	0.0	0.0	0.0	0.0	0.0	0.0	0.0	0.0	0.0	0.0	0.0	0.0	0.0	0.0	0.0	0.0
Yellow	3.0	3.0	3.0	3.0	3.0	3.0	3.0	3.0	3.0	3.0	3.0	3.0	3.0	3.0	3.0	3.0
Red Clear	1.0	1.0	1.0	1.0	1.0	1.0	1.0	1.0	1.0	1.0	1.0	1.0	1.0	1.0	1.0	1.0
Red Max	0.0	0.0	0.0	0.0	0.0	0.0	0.0	0.0	0.0	0.0	0.0	0.0	0.0	0.0	0.0	0.0
Red Revert	2.0	2.0	2.0	2.0	2.0	2.0	2.0	2.0	2.0	2.0	2.0	2.0	2.0	2.0	2.0	2.0
ACT B4	0	0	0	0	0	0	0	0	0	0	0	0	0	0	0	0
SEC/ACT	0.0	0.0	0.0	0.0	0.0	0.0	0.0	0.0	0.0	0.0	0.0	0.0	0.0	0.0	0.0	0.0
Max Int	0	0	0	0	0	0	0	0	0	0	0	0	0	0	0	0
Time B4	0	0	0	0	0	0	0	0	0	0	0	0	0	0	0	0
Cars Wt	0	0	0	0	0	0	0	0	0	0	0	0	0	0	0	0
STPT Duc	0.0	0.0	0.0	0.0	0.0	0.0	0.0	0.0	0.0	0.0	0.0	0.0	0.0	0.0	0.0	0.0
Time To Reduce	0	0	0	0	0	0	0	0	0	0	0	0	0	0	0	0
Min Gap	0.0	0.0	0.0	0.0	0.0	0.0	0.0	0.0	0.0	0.0	0.0	0.0	0.0	0.0	0.0	0.0

Plan 4

Phase	1	2	3	4	5	6	7	8	9	10	11	12	13	14	15	16
Min Green	5	5	5	5	5	5	5	5	5	5	5	5	5	5	5	5
BK Min Green	0	0	0	0	0	0	0	0	0	0	0	0	0	0	0	0
CS Min Green	0	0	0	0	0	0	0	0	0	0	0	0	0	0	0	0
Delay Green	0	0	0	0	0	0	0	0	0	0	0	0	0	0	0	0
Walk	0	10	0	10	0	10	0	10	0	10	0	10	0	10	0	10
Walk 2	0	0	0	0	0	0	0	0	0	0	0	0	0	0	0	0
Walk Max	0	0	0	0	0	0	0	0	0	0	0	0	0	0	0	0
Ped Clear	0	16	0	16	0	16	0	16	0	16	0	16	0	16	0	16
Ped Clear 2	0	0	0	0	0	0	0	0	0	0	0	0	0	0	0	0
Ped Clear Max	0	0	0	0	0	0	0	0	0	0	0	0	0	0	0	0
Ped CO	0	0	0	0	0	0	0	0	0	0	0	0	0	0	0	0
Vehicle Ext	5.0	5.0	5.0	5.0	5.0	5.0	5.0	5.0	5.0	5.0	5.0	5.0	5.0	5.0	5.0	5.0
Vehicle Ext 2	0.0	0.0	0.0	0.0	0.0	0.0	0.0	0.0	0.0	0.0	0.0	0.0	0.0	0.0	0.0	0.0
Max 1	35	35	35	35	35	35	35	35	35	35	35	35	35	35	35	35
Max 2	40	40	40	40	40	40	40	40	40	40	40	40	40	40	40	40
Max 3	0	0	0	0	0	0	0	0	0	0	0	0	0	0	0	0
DYM Max	0	0	0	0	0	0	0	0	0	0	0	0	0	0	0	0
DYM Stp	0.0	0.0	0.0	0.0	0.0	0.0	0.0	0.0	0.0	0.0	0.0	0.0	0.0	0.0	0.0	0.0
Yellow	3.0	3.0	3.0	3.0	3.0	3.0	3.0	3.0	3.0	3.0	3.0	3.0	3.0	3.0	3.0	3.0
Red Clear	1.0	1.0	1.0	1.0	1.0	1.0	1.0	1.0	1.0	1.0	1.0	1.0	1.0	1.0	1.0	1.0
Red Max	0.0	0.0	0.0	0.0	0.0	0.0	0.0	0.0	0.0	0.0	0.0	0.0	0.0	0.0	0.0	0.0
Red Revert	2.0	2.0	2.0	2.0	2.0	2.0	2.0	2.0	2.0	2.0	2.0	2.0	2.0	2.0	2.0	2.0
ACT B4	0	0	0	0	0	0	0	0	0	0	0	0	0	0	0	0
SEC/ACT	0.0	0.0	0.0	0.0	0.0	0.0	0.0	0.0	0.0	0.0	0.0	0.0	0.0	0.0	0.0	0.0
Max Int	0	0	0	0	0	0	0	0	0	0	0	0	0	0	0	0
Time B4	0	0	0	0	0	0	0	0	0	0	0	0	0	0	0	0
Cars Wt	0	0	0	0	0	0	0	0	0	0	0	0	0	0	0	0
STPT Duc	0.0	0.0	0.0	0.0	0.0	0.0	0.0	0.0	0.0	0.0	0.0	0.0	0.0	0.0	0.0	0.0
Time To Reduce	0	0	0	0	0	0	0	0	0	0	0	0	0	0	0	0
Min Gap	0.0	0.0	0.0	0.0	0.0	0.0	0.0	0.0	0.0	0.0	0.0	0.0	0.0	0.0	0.0	0.0

Milliken/Foothill - Milliken @ 6th 110322

Controller Overlaps

Vehicle Overlaps (MM)2-2

Overlap	Type	Lag Green	Yellow	Red	Advance Green

Phases

Overlap	Phase	Included	Protect	Modifier	Ped Protect	Not Overlap	Lag X Phase	Lag 2 Phase	Flash Green

Guaranteed Minimum Time Data (MM) 2-4
Phase Time Data

Phase	Min Green	Walk	Ped Clear	Yellow	Red Clear	Overlap Green
A01	5	0	7	3.0	0.0	5
B02	5	0	7	3.0	0.0	5
C03	5	0	7	3.0	0.0	5
D04	5	0	7	3.0	0.0	5
E05	5	0	7	3.0	0.0	5
F06	5	0	7	3.0	0.0	5
G07	5	0	7	3.0	0.0	5
H08	5	0	7	3.0	0.0	5
I09	5	0	7	3.0	0.0	5
J10	5	0	7	3.0	0.0	5
K11	5	0	7	3.0	0.0	5
L12	5	0	7	3.0	0.0	5
M13	5	0	7	3.0	0.0	5
N14	5	0	7	3.0	0.0	5
O15	5	0	7	3.0	0.0	5
P16	5	0	7	3.0	0.0	5

Milliken/Foothill - Milliken @ 6th 110322

Controller Pedestrian Overlaps
Pedestrian Overlaps (MM) 2-3
Included Phase Ped Overlap

Milliken/Foothill - Milliken @ 6th 110322

Controller Start/Fash (MM) 2-5

Startup

Phase	Phase Setting
4	Y
8	Y

Overlap

Flash > Mon:	No
Flash Time:	10
All Red:	5
Power Start Sequence:	1

Automatic Flash

Entry Phase
4
8

Exit Phase
4
8

Overlap Exit

Flash > Mon:	No
Exit Flash Interval:	Y
Minimum Auto Flash:	8
Minimumin Recall:	No
Cycle Through Phase:	No

Milliken/Foothill - Milliken @ 6th 110322

Controller Options

Controller Options (MM)2-6-1

Phase	Flashing Green Phase	Guaranteed Passage	Non Act 1	Non Act 2	Dual Entry	Conditional Service	Conditional Reservice	Ped Reservice	Rest In Walk	Flashing Walk	Ped Clear Yellow	Ped Clear Red	IGRN + Veh Ext
2	No	No	Yes	No	Yes	No	No	No	No	No	No	No	No
4	No	No	No	Yes	Yes	No	No	No	No	No	No	No	No
6	No	No	Yes	No	Yes	No	No	No	No	No	No	No	No
8	No	No	No	Yes	Yes	No	No	No	No	No	No	No	No

Ped Clear Protect: Off Red Revert: 2.0

Act Pre-Time (MM)2-7

Pre-Time Mode Enable: No Free Input Enables Pre-Timed: Yes

Pre-Timed Phase

Phase Recall Options (MM)2-8

Plan	Phase	Lock Detector	Vehicle Recall	Ped Recall	Max Recall	Soft Recall	No Rest	AI Calc
1	2	No	Yes	No	No	No	No	No
1	6	No	Yes	Yes	No	No	No	No
2	1	Yes	No	No	No	No	No	No
2	2	Yes	No	No	No	No	No	No
2	3	Yes	No	No	No	No	No	No
2	4	Yes	No	No	No	No	No	No
2	5	Yes	No	No	No	No	No	No
2	6	Yes	No	No	No	No	No	No
2	7	Yes	No	No	No	No	No	No
2	8	Yes	No	No	No	No	No	No
2	9	Yes	No	No	No	No	No	No
2	10	Yes	No	No	No	No	No	No
2	11	Yes	No	No	No	No	No	No
2	12	Yes	No	No	No	No	No	No
2	13	Yes	No	No	No	No	No	No
2	14	Yes	No	No	No	No	No	No
2	15	Yes	No	No	No	No	No	No
2	16	Yes	No	No	No	No	No	No
3	1	Yes	No	No	No	No	No	No
3	2	Yes	No	No	No	No	No	No
3	3	Yes	No	No	No	No	No	No
3	4	Yes	No	No	No	No	No	No
3	5	Yes	No	No	No	No	No	No
3	6	Yes	No	No	No	No	No	No
3	7	Yes	No	No	No	No	No	No
3	8	Yes	No	No	No	No	No	No
3	9	Yes	No	No	No	No	No	No
3	10	Yes	No	No	No	No	No	No
3	11	Yes	No	No	No	No	No	No
3	12	Yes	No	No	No	No	No	No
3	13	Yes	No	No	No	No	No	No
3	14	Yes	No	No	No	No	No	No
3	15	Yes	No	No	No	No	No	No
3	16	Yes	No	No	No	No	No	No
4	1	Yes	No	No	No	No	No	No
4	2	Yes	No	No	No	No	No	No
4	3	Yes	No	No	No	No	No	No

4	4	Yes	No	No	No	No	No	No
4	5	Yes	No	No	No	No	No	No
4	6	Yes	No	No	No	No	No	No
4	7	Yes	No	No	No	No	No	No
4	8	Yes	No	No	No	No	No	No
4	9	Yes	No	No	No	No	No	No
4	10	Yes	No	No	No	No	No	No
4	11	Yes	No	No	No	No	No	No
4	12	Yes	No	No	No	No	No	No
4	13	Yes	No	No	No	No	No	No
4	14	Yes	No	No	No	No	No	No
4	15	Yes	No	No	No	No	No	No
4	16	Yes	No	No	No	No	No	No

Milliken/Foothill - Milliken @ 6th 110322

Coordination Options
Coordination Options (MM)3-1

Manual Pattern:	55
ECPI Coord:	Yes
System Source:	HDW
System Format:	STD
Splits In:	Percent
Offsets In:	Percent
Transition:	Smooth
Max Select:	MAXINH
Dwell/Add Time:	0
Dly Coord Wz-Lz:	No
Force Off:	Float
Offset Reference:	Lead
Use Ped Time:	Yes
Ped Recall:	No
Ped Resv:	No
Local Zero Ovrd:	No
Fo Add Ini Green:	No
Re-sync Count:	0
Multisync:	No

Split Demand (MM)3-5

Demand 1 Phase	Demand 2 Phase

Demand	Detector	Call Time	Cycle Count

Auto Perm Minimum Green (Seconds) (MM)3-4

Phase	Min Green

Milliken/Foothill - Milliken @ 6th 110322

Coordination Pattern Data

Pattern Data (MM)3-2

Pattern	Split Pattern	TS2	Cycle	Std(COS)	Offset Value	Splits In	Offsets In	Actuated Coord
1	1	0-1	120	112	0	Percent	Percent	No
7	7	2-1	100	411	32	Percent	Percent	No
9	9	2-3	100	611	8	Percent	Percent	No

Pattern	Timing Plan	Actuated Walk Rest	Sequence	Phase Reservice	Action Plan	XArt Pattern	Vehicle Perm 1	Vehicle Perm 2	Vehicle Perm 3
1	0	No	0	No	0	0	0	0	0
7	0	No	0	No	0	0	0	0	0
9	0	No	0	No	0	0	0	0	0

Pattern	Ring Split Ext 1	Ring Split Ext 2	Ring Split Ext 3	Ring Split Ext 4	Split Demand Pattern 1	Split Demand Pattern 2	Ring Displ 2	Ring Displ 3	Ring Displ 4
1	0	0	0	0	0	0	0	0	0
7	0	0	0	0	0	0	0	0	0
9	0	0	0	0	0	0	0	0	0

Split Preference Phases

Pattern	Phase	Preference 1	Preference 2

Special Functions

Pattern	Function	Output

Split Pattern Data (MM)3-3

Coord Phases

Split Pattern	Phase	Split
1	1	15
1	2	40
1	3	15
1	4	30
1	5	15
1	6	40
1	7	15
1	8	30
7	1	15
7	2	35
7	3	15
7	4	35
7	5	15
7	6	35
7	7	15
7	8	35
9	1	15
9	2	35
9	3	15
9	4	35
9	5	15
9	6	35
9	7	15
9	8	35

Split/Modes

Split Pattern	Mode	Phase 1	2	3	4	5	6	7	8	9	10	11	12	13	14	15	16
1	Coord	X				X											
1	Ped Recall	X		X		X		X									
7	Coord	X				X											
9	Vehicle Recall	X				X											

Milliken/Foothill - Milliken @ 6th 110322

Preemptor Preempt Plan (MM)4-1

Preempt Phases

Preempt	Phase	Track Clear Veh	Dwell Veh	Dwell Ped	Cycling Veh	Cycling Ped	Exit Phase	Exit Calls	Special Function
3	2	No	Yes	No	No	No	No	No	No
3	5	No	Yes	No	No	No	No	No	No
4	4	No	Yes	No	No	No	No	No	No
4	7	No	Yes	No	No	No	No	No	No
5	1	No	Yes	No	No	No	No	No	No
5	6	No	Yes	No	No	No	No	No	No
6	3	No	Yes	No	No	No	No	No	No
6	8	No	Yes	No	No	No	No	No	No

Preempt Overlaps

Preempt	Overlap	Track Clear	Enable Trailing	Dwell Overlap	Cycling Overlap
3	A	No	No	No	No
3	B	No	No	No	No
3	C	No	No	No	No
3	D	No	No	No	No
3	E	No	No	No	No
3	F	No	No	No	No
3	G	No	No	No	No
3	H	No	No	No	No
3	I	No	No	No	No
3	J	No	No	No	No
3	K	No	No	No	No
3	L	No	No	No	No
3	M	No	No	No	No
3	N	No	No	No	No
3	O	No	No	No	No
3	P	No	No	No	No
4	A	No	No	No	No
4	B	No	No	No	No
4	C	No	No	No	No
4	D	No	No	No	No
4	E	No	No	No	No
4	F	No	No	No	No
4	G	No	No	No	No
4	H	No	No	No	No
4	I	No	No	No	No
4	J	No	No	No	No
4	K	No	No	No	No
4	L	No	No	No	No
4	M	No	No	No	No
4	N	No	No	No	No
4	O	No	No	No	No
4	P	No	No	No	No
5	A	No	No	No	No
5	B	No	No	No	No
5	C	No	No	No	No
5	D	No	No	No	No
5	E	No	No	No	No
5	F	No	No	No	No
5	G	No	No	No	No
5	H	No	No	No	No

5	I	No	No	No	No
5	J	No	No	No	No
5	K	No	No	No	No
5	L	No	No	No	No
5	M	No	No	No	No
5	N	No	No	No	No
5	O	No	No	No	No
5	P	No	No	No	No
6	A	No	No	No	No
6	B	No	No	No	No
6	C	No	No	No	No
6	D	No	No	No	No
6	E	No	No	No	No
6	F	No	No	No	No
6	G	No	No	No	No
6	H	No	No	No	No
6	I	No	No	No	No
6	J	No	No	No	No
6	K	No	No	No	No
6	L	No	No	No	No
6	M	No	No	No	No
6	N	No	No	No	No
6	O	No	No	No	No
6	P	No	No	No	No

Preempt	Enable	Preempt Override	Interlock Enable	Detector Lock	Delay	Inhibit	Override Flash	Duration	CLR > GRN
1	No	Yes	No	Yes	0	0	No	0	No
2	No	Yes	No	Yes	0	0	No	0	No
3	Standard	No	No	No	0	0	No	10	No
4	Standard	No	No	No	0	0	No	10	No
5	Standard	No	No	No	0	0	No	10	No
6	Standard	No	No	No	0	0	No	10	No
7	No	Yes	No	Yes	0	0	No	0	No
8	No	Yes	No	Yes	0	0	No	0	No
9	No	Yes	No	Yes	0	0	No	0	No
10	No	Yes	No	Yes	0	0	No	0	No

Preempt	Term Overlap Asap	PC Through Yellow	Terminate Phase	Ped Dark	Track Clearance Re-service	Dwell Flash	Linked Pmt	Flash Exit Color	Preempt To Coord
1	No	No	No	No	No	Off	0	Green	No
2	No	No	No	No	No	Off	0	Green	No
3	No	No	No	No	No	Off	0	Green	No
4	No	No	No	No	No	Off	0	Green	No
5	No	No	No	No	No	Off	0	Green	No
6	No	No	No	No	No	Off	0	Green	No
7	No	No	No	No	No	Off	0	Green	No
8	No	No	No	No	No	Off	0	Green	No
9	No	No	No	No	No	Off	0	Green	No
10	No	No	No	No	No	Off	0	Green	No

Preempt	Exit Timing Plan	Reservice	Free During Pmt Ring 1	Free During Pmt Ring 2	Free During Pmt Ring 3	Free During Pmt Ring 4
1	0	0	No	No	No	No
2	0	0	No	No	No	No
3	0	0	No	No	No	No
4	0	0	No	No	No	No
5	0	0	No	No	No	No
6	0	0	No	No	No	No

7	0	0	No	No	No	No
8	0	0	No	No	No	No
9	0	0	No	No	No	No
10	0	0	No	No	No	No

Preempt	Entrance Walk	Entrance Ped Clear	Entrance Min Green	Entrance Yellow	Entrance Red	Track Clear Min Green	Gate Down Ext Green	Gate Down Max Green	Track Clear Yellow	Track Clear Red
1	0	255	5	4.0	1.0	0	0	0	4.0	1.0
2	0	255	5	4.0	1.0	0	0	0	4.0	1.0
3	0	255	5	25.5	25.5	0	0	0	25.5	25.5
4	0	255	5	25.5	25.5	0	0	0	25.5	25.5
5	0	255	5	25.5	25.5	0	0	0	25.5	25.5
6	0	255	5	25.5	25.5	0	0	0	25.5	25.5
7	0	255	5	4.0	1.0	0	0	0	4.0	1.0
8	0	255	5	4.0	1.0	0	0	0	4.0	1.0
9	0	255	5	4.0	1.0	0	0	0	4.0	1.0
10	0	255	5	4.0	1.0	0	0	0	4.0	1.0

Preempt	Min Dwell Time	Extend Preempt Input Time	Max Preempt Call Time	Exit Yellow Time	Exit Red Time	Preempt Active Out	Preempt Active Dwell	Other Priority Preempt	Non-Priority Preempt
1	0	0.0	0	4.0	1.0	On	No	Off	Off
2	0	0.0	0	4.0	1.0	On	No	Off	Off
3	10	0.0	60	25.5	25.5	Off	No	Off	Off
4	10	0.0	60	25.5	25.5	Off	No	Off	Off
5	10	0.0	60	25.5	25.5	Off	No	Off	Off
6	10	0.0	60	25.5	25.5	Off	No	Off	Off
7	0	0.0	0	4.0	1.0	On	No	Off	Off
8	0	0.0	0	4.0	1.0	On	No	Off	Off
9	0	0.0	0	4.0	1.0	On	No	Off	Off
10	0	0.0	0	4.0	1.0	On	No	Off	Off

Milliken/Foothill - Milliken @ 6th 110322

Preemptor Preempt Filtering

Enable Preempt Filtering and TSP/SCP (MM)4-2

Input	Solid	Pulsing
3	Preemption -3	Preemption -7
4	Preemption -4	Preemption -8
5	Preemption -5	Preemption -9
6	Preemption -6	Preemption -10

Milliken/Foothill - Milliken @ 6th 110322

Time Base Clock/Calendar

Clock/Calendar Options (MM)5-1

Enable Action Plan:	0
Sync Reference Time:	12:00 AM
Sync Reference:	Reference Time
Day Light Savings:	No
Time Reset Input Set Time:	3:30:00
Standard Time From GMT:	-8

Milliken/Foothill - Milliken @ 6th 110322

Time Base Action Plan

Action Plan (MM)5-2

Plan	Pattern	Veh Det Plan	Flash	Red Reset	Controller Seq	Timing Plan	System Override	Detector Log	Veh Det Diag Plan	Ped Det Diag Plan	Dimming Enable
4	4	0	No	No	0	1	Yes	None	0	0	No
6	6	0	No	No	0	1	Yes	None	0	0	No
55	254 - FREE	0	No	No	1	1	Yes	None	0	0	No

Action Plan Phases

Plan	Phase	Red Rcl	Walk 2	Vex 2	Veh Rcl	Max Rcl	Max 2	Max 3	CS Inhibit	Omit

Acion Plan Special Functions

Plan	Function

Action Plan Auxiliary Functions

Plan	Function

Logic Statement Control

Plan	LP	Statement Control
1	1	E

Milliken/Foothill - Milliken @ 6th 110322

Time Base Day Plan/Schedule

Day Plan (MM)5-3

Plan	Event	Action Plan	Start Time
1	1	7	6:30 AM
1	2	55	9:00 AM
1	3	9	4:00 PM
1	4	55	7:00 PM

Schedule (MM)5-4

Schedule Number	Day Plan Number	Months	Days of Week	Days of Month
1	1	Jan, Feb, Mar, Apr, May, Jun, Jul, Aug, Sept, Oct, Nov, Dec	Mon, Tues, Wed, Thurs, Fri	1, 2, 3, 4, 5, 6, 7, 8, 9, 10, 11, 12, 13, 14, 15, 16, 17, 18, 19, 20, 21, 22, 23, 24, 25, 26, 27, 28, 29, 30, 31

Milliken/Foothill - Milliken @ 6th 110322

Time Base Exceptions

Exception Day Program (MM)5-5

Day	Fixed/Float	Month	Day of Week/Month	Week of Month/Year	Day Plan
1	FLOAT	0	0	0	0
2	FLOAT	0	0	0	0
3	FLOAT	0	0	0	0
4	FLOAT	0	0	0	0
5	FLOAT	0	0	0	0
6	FLOAT	0	0	0	0
7	FLOAT	0	0	0	0
8	FLOAT	0	0	0	0
9	FLOAT	0	0	0	0
10	FLOAT	0	0	0	0
11	FLOAT	0	0	0	0
12	FLOAT	0	0	0	0
13	FLOAT	0	0	0	0
14	FLOAT	0	0	0	0
15	FLOAT	0	0	0	0
16	FLOAT	0	0	0	0
17	FLOAT	0	0	0	0
18	FLOAT	0	0	0	0
19	FLOAT	0	0	0	0
20	FLOAT	0	0	0	0
21	FLOAT	0	0	0	0
22	FLOAT	0	0	0	0
23	FLOAT	0	0	0	0
24	FLOAT	0	0	0	0
25	FLOAT	0	0	0	0
26	FLOAT	0	0	0	0
27	FLOAT	0	0	0	0
28	FLOAT	0	0	0	0
29	FLOAT	0	0	0	0
30	FLOAT	0	0	0	0
31	FLOAT	0	0	0	0
32	FLOAT	0	0	0	0
33	FLOAT	0	0	0	0
34	FLOAT	0	0	0	0
35	FLOAT	0	0	0	0
36	FLOAT	0	0	0	0

Milliken/Foothill - Milliken @ 6th 110322

Detectors

Detectors Page 1

Vehicle Detectors Setup (MM)6-1

Vehicle Plan	Detector Number	Called
1	1	1
1	2	2
1	3	3
1	4	4
1	5	5
1	6	6
1	7	7
1	8	8
1	9	1
1	10	2
1	11	3
1	12	4
1	13	5
1	14	6
1	15	7
1	16	8
1	17	1
1	18	2
1	19	3
1	20	4
1	21	5
1	22	6
1	23	7
1	24	8
1	26	2
1	28	4
1	30	6
1	32	8
2	1	2
4	1	4

Vehicle Detector Setup (MM)6-2 continued

Detector Number	ECPI	TS2 Detector	Detector Description
17	7	Yes	
18	7	Yes	
19	7	Yes	
20	7	Yes	
21	7	Yes	
22	7	Yes	
23	7	Yes	
24	7	Yes	
25	6	Yes	
27	6	Yes	
29	6	Yes	
31	6	Yes	

Vehicle Detector Setup (MM)6-2 continued

Detector Number	Vehicle Plan	Assigned Phase	Switch Phase	Extend Time	Delay Time	Queue Limit	Yellow Lock	Added Option	Call Option	Passage Option	Queue Option	NTCIP Occupancy	NTCIP Volume	ECPI Log	Red Lock
1	1	1	0	0.0	0.0	0	No	No	Yes	Yes	No	No	No	No	No
1	2	1	0	0.0	0.0	0	No	No	Yes	Yes	No	No	No	No	No
1	3	1	0	0.0	0.0	0	No	No	Yes	Yes	No	No	No	No	No
1	4	1	0	0.0	0.0	0	No	No	Yes	Yes	No	No	No	No	No
2	1	2	0	3.1	0.0	0	No	No	Yes	Yes	No	No	No	No	No
2	2	2	0	0.0	0.0	0	No	No	Yes	Yes	No	No	No	No	No
2	3	2	0	0.0	0.0	0	No	No	Yes	Yes	No	No	No	No	No
2	4	2	0	0.0	0.0	0	No	No	Yes	Yes	No	No	No	No	No
3	1	3	0	0.0	0.0	0	No	No	Yes	Yes	No	No	No	No	No
3	2	3	0	0.0	0.0	0	No	No	Yes	Yes	No	No	No	No	No
3	3	3	0	0.0	0.0	0	No	No	Yes	Yes	No	No	No	No	No
3	4	3	0	0.0	0.0	0	No	No	Yes	Yes	No	No	No	No	No
4	1	4	0	2.7	0.0	0	No	No	Yes	Yes	No	No	No	No	No
4	2	4	0	0.0	0.0	0	No	No	Yes	Yes	No	No	No	No	No
4	3	4	0	0.0	0.0	0	No	No	Yes	Yes	No	No	No	No	No
4	4	4	0	0.0	0.0	0	No	No	Yes	Yes	No	No	No	No	No
5	1	5	0	0.0	0.0	0	No	No	Yes	Yes	No	No	No	No	No
5	2	5	0	0.0	0.0	0	No	No	Yes	Yes	No	No	No	No	No
5	3	5	0	0.0	0.0	0	No	No	Yes	Yes	No	No	No	No	No
5	4	5	0	0.0	0.0	0	No	No	Yes	Yes	No	No	No	No	No
6	1	6	0	3.1	0.0	0	No	No	Yes	Yes	No	No	No	No	No
6	2	6	0	0.0	0.0	0	No	No	Yes	Yes	No	No	No	No	No
6	3	6	0	0.0	0.0	0	No	No	Yes	Yes	No	No	No	No	No
6	4	6	0	0.0	0.0	0	No	No	Yes	Yes	No	No	No	No	No
7	1	7	0	0.0	0.0	0	No	No	Yes	Yes	No	No	No	No	No
7	2	7	0	0.0	0.0	0	No	No	Yes	Yes	No	No	No	No	No
7	3	7	0	0.0	0.0	0	No	No	Yes	Yes	No	No	No	No	No
7	4	7	0	0.0	0.0	0	No	No	Yes	Yes	No	No	No	No	No
8	1	8	0	2.7	0.0	0	No	No	Yes	Yes	No	No	No	No	No
8	2	8	0	0.0	0.0	0	No	No	Yes	Yes	No	No	No	No	No
8	3	8	0	0.0	0.0	0	No	No	Yes	Yes	No	No	No	No	No
8	4	8	0	0.0	0.0	0	No	No	Yes	Yes	No	No	No	No	No
9	1	1	0	0.0	0.0	0	No	No	Yes	Yes	No	No	No	No	No
9	2	9	0	0.0	0.0	0	No	No	Yes	Yes	No	No	No	No	No
9	3	9	0	0.0	0.0	0	No	No	Yes	Yes	No	No	No	No	No
9	4	9	0	0.0	0.0	0	No	No	Yes	Yes	No	No	No	No	No
10	1	2	0	0.0	0.0	0	No	No	Yes	Yes	No	No	No	No	No
10	2	10	0	0.0	0.0	0	No	No	Yes	Yes	No	No	No	No	No
10	3	10	0	0.0	0.0	0	No	No	Yes	Yes	No	No	No	No	No
10	4	10	0	0.0	0.0	0	No	No	Yes	Yes	No	No	No	No	No

11	1	3	0	0.0	0.0	0	No	No	Yes	Yes	No	No	No	No	No
11	2	11	0	0.0	0.0	0	No	No	Yes	Yes	No	No	No	No	No
11	3	11	0	0.0	0.0	0	No	No	Yes	Yes	No	No	No	No	No
11	4	11	0	0.0	0.0	0	No	No	Yes	Yes	No	No	No	No	No
12	1	4	0	0.0	0.0	0	No	No	Yes	Yes	No	No	No	No	No
12	2	12	0	0.0	0.0	0	No	No	Yes	Yes	No	No	No	No	No
12	3	12	0	0.0	0.0	0	No	No	Yes	Yes	No	No	No	No	No
12	4	12	0	0.0	0.0	0	No	No	Yes	Yes	No	No	No	No	No
13	1	5	0	0.0	0.0	0	No	No	Yes	Yes	No	No	No	No	No
13	2	13	0	0.0	0.0	0	No	No	Yes	Yes	No	No	No	No	No
13	3	13	0	0.0	0.0	0	No	No	Yes	Yes	No	No	No	No	No
13	4	13	0	0.0	0.0	0	No	No	Yes	Yes	No	No	No	No	No
14	1	6	0	0.0	0.0	0	No	No	Yes	Yes	No	No	No	No	No
14	2	14	0	0.0	0.0	0	No	No	Yes	Yes	No	No	No	No	No
14	3	14	0	0.0	0.0	0	No	No	Yes	Yes	No	No	No	No	No
14	4	14	0	0.0	0.0	0	No	No	Yes	Yes	No	No	No	No	No
15	1	7	0	0.0	0.0	0	No	No	Yes	Yes	No	No	No	No	No
15	2	15	0	0.0	0.0	0	No	No	Yes	Yes	No	No	No	No	No
15	3	15	0	0.0	0.0	0	No	No	Yes	Yes	No	No	No	No	No
15	4	15	0	0.0	0.0	0	No	No	Yes	Yes	No	No	No	No	No
16	1	8	0	0.0	0.0	0	No	No	Yes	Yes	No	No	No	No	No
16	2	16	0	0.0	0.0	0	No	No	Yes	Yes	No	No	No	No	No
16	3	16	0	0.0	0.0	0	No	No	Yes	Yes	No	No	No	No	No
16	4	16	0	0.0	0.0	0	No	No	Yes	Yes	No	No	No	No	No
17	1	1	0	3.0	0.0	0	Yes	No	Yes	Yes	No	No	No	No	Yes
17	2	0	0	0.0	0.0	0	Yes	No	Yes	Yes	No	No	No	No	Yes
17	3	0	0	0.0	0.0	0	Yes	No	Yes	Yes	No	No	No	No	Yes
17	4	0	0	0.0	0.0	0	Yes	No	Yes	Yes	No	No	No	No	Yes
18	1	2	0	3.0	0.0	0	Yes	No	Yes	Yes	No	No	No	No	Yes
18	2	0	0	0.0	0.0	0	Yes	No	Yes	Yes	No	No	No	No	Yes
18	3	0	0	0.0	0.0	0	Yes	No	Yes	Yes	No	No	No	No	Yes
18	4	0	0	0.0	0.0	0	Yes	No	Yes	Yes	No	No	No	No	Yes
19	1	3	0	3.0	0.0	0	Yes	No	Yes	Yes	No	No	No	No	Yes
19	2	0	0	0.0	0.0	0	Yes	No	Yes	Yes	No	No	No	No	Yes
19	3	0	0	0.0	0.0	0	Yes	No	Yes	Yes	No	No	No	No	Yes
19	4	0	0	0.0	0.0	0	Yes	No	Yes	Yes	No	No	No	No	Yes
20	1	4	0	3.0	0.0	0	Yes	No	Yes	Yes	No	No	No	No	Yes
20	2	0	0	0.0	0.0	0	Yes	No	Yes	Yes	No	No	No	No	Yes
20	3	0	0	0.0	0.0	0	Yes	No	Yes	Yes	No	No	No	No	Yes
20	4	0	0	0.0	0.0	0	Yes	No	Yes	Yes	No	No	No	No	Yes
21	1	5	0	3.0	0.0	0	Yes	No	Yes	Yes	No	No	No	No	Yes
21	2	0	0	0.0	0.0	0	Yes	No	Yes	Yes	No	No	No	No	Yes
21	3	0	0	0.0	0.0	0	Yes	No	Yes	Yes	No	No	No	No	Yes
21	4	0	0	0.0	0.0	0	Yes	No	Yes	Yes	No	No	No	No	Yes
22	1	6	0	3.0	0.0	0	Yes	No	Yes	Yes	No	No	No	No	Yes
22	2	0	0	0.0	0.0	0	Yes	No	Yes	Yes	No	No	No	No	Yes
22	3	0	0	0.0	0.0	0	Yes	No	Yes	Yes	No	No	No	No	Yes
22	4	0	0	0.0	0.0	0	Yes	No	Yes	Yes	No	No	No	No	Yes
23	1	7	0	3.0	0.0	0	Yes	No	Yes	Yes	No	No	No	No	Yes
23	2	0	0	0.0	0.0	0	Yes	No	Yes	Yes	No	No	No	No	Yes
23	3	0	0	0.0	0.0	0	Yes	No	Yes	Yes	No	No	No	No	Yes
23	4	0	0	0.0	0.0	0	Yes	No	Yes	Yes	No	No	No	No	Yes
24	1	8	0	3.0	0.0	0	Yes	No	Yes	Yes	No	No	No	No	Yes
24	2	0	0	0.0	0.0	0	Yes	No	Yes	Yes	No	No	No	No	Yes
24	3	0	0	0.0	0.0	0	Yes	No	Yes	Yes	No	No	No	No	Yes
24	4	0	0	0.0	0.0	0	Yes	No	Yes	Yes	No	No	No	No	Yes
26	1	2	0	0.0	10.0	0	No	No	Yes	Yes	No	No	No	No	No
28	1	4	0	0.0	10.0	0	No	No	Yes	Yes	No	No	No	No	No
30	1	6	0	0.0	10.0	0	No	No	Yes	Yes	No	No	No	No	No
32	1	8	0	0.0	10.0	0	No	No	Yes	Yes	No	No	No	No	No

Ped and System Detector Options
(MM)6-4

Phase Ped Detector

Local Ped Detector	Number
1	1
2	2
3	3
4	4
5	5
6	6
7	7
8	8
9	9
10	10
11	11
12	12
13	13
14	14
15	15
16	16

Local System Detector

Local System Detector	Number

Milliken/Foothill - Milliken @ 6th 110322

Detectors

Detectors Page 2

Log - Speed Detector Setup (MM)6-5

NTCIP Log Period: 60	ECPI Log Period: TBAP	Length Unit: Inch

Speed Detector	Local Detector	One/Two Detector	Vehicle Length	Trap Length	Enable Log
1	0	1	0	0	No
2	0	1	0	0	No
3	0	1	0	0	No
4	0	1	0	0	No
5	0	1	0	0	No
6	0	1	0	0	No
7	0	1	0	0	No
8	0	1	0	0	No
9	0	1	0	0	No
10	0	1	0	0	No
11	0	1	0	0	No
12	0	1	0	0	No
13	0	1	0	0	No
14	0	1	0	0	No
15	0	1	0	0	No
16	0	1	0	0	No

Vehicle Detector Diagnostics (MM)6-6

Plan	Detector	Counts	Act	Pres	Multiplier	Failed Time	Failed Call Delay
1	1	0	0	0	1	255	0
1	2	0	0	0	1	255	0
1	3	0	0	0	1	255	0
1	4	0	0	0	1	255	0
1	5	0	0	0	1	255	0
1	6	0	0	0	1	255	0
1	7	0	0	0	1	255	0
1	8	0	0	0	1	255	0
1	9	0	0	0	1	255	0
1	10	0	0	0	1	255	0
1	11	0	0	0	1	255	0
1	12	0	0	0	1	255	0
1	13	0	0	0	1	255	0
1	14	0	0	0	1	255	0
1	15	0	0	0	1	255	0
1	16	0	0	0	1	255	0
1	17	0	0	0	1	255	0
1	18	0	0	0	1	255	0
1	19	0	0	0	1	255	0
1	20	0	0	0	1	255	0
1	21	0	0	0	1	255	0
1	22	0	0	0	1	255	0
1	23	0	0	0	1	255	0
1	24	0	0	0	1	255	0
1	25	0	0	0	1	255	0
1	26	0	0	0	1	255	0
1	27	0	0	0	1	255	0
1	28	0	0	0	1	255	0

1	29	0	0	0	1	255	0
1	30	0	0	0	1	255	0
1	31	0	0	0	1	255	0
1	32	0	0	0	1	255	0
1	33	0	0	0	1	255	0
1	34	0	0	0	1	255	0
1	35	0	0	0	1	255	0
1	36	0	0	0	1	255	0
1	37	0	0	0	1	255	0
1	38	0	0	0	1	255	0
1	39	0	0	0	1	255	0
1	40	0	0	0	1	255	0
1	41	0	0	0	1	255	0
1	42	0	0	0	1	255	0
1	43	0	0	0	1	255	0
1	44	0	0	0	1	255	0
1	45	0	0	0	1	255	0
1	46	0	0	0	1	255	0
1	47	0	0	0	1	255	0
1	48	0	0	0	1	255	0
1	49	0	0	0	1	255	0
1	50	0	0	0	1	255	0
1	51	0	0	0	1	255	0
1	52	0	0	0	1	255	0
1	53	0	0	0	1	255	0
1	54	0	0	0	1	255	0
1	55	0	0	0	1	255	0
1	56	0	0	0	1	255	0
1	57	0	0	0	1	255	0
1	58	0	0	0	1	255	0
1	59	0	0	0	1	255	0
1	60	0	0	0	1	255	0
1	61	0	0	0	1	255	0
1	62	0	0	0	1	255	0
1	63	0	0	0	1	255	0
1	64	0	0	0	1	255	0
2	1	0	0	0	1	255	0
2	2	0	0	0	1	255	0
2	3	0	0	0	1	255	0
2	4	0	0	0	1	255	0
2	5	0	0	0	1	255	0
2	6	0	0	0	1	255	0
2	7	0	0	0	1	255	0
2	8	0	0	0	1	255	0
2	9	0	0	0	1	255	0
2	10	0	0	0	1	255	0
2	11	0	0	0	1	255	0
2	12	0	0	0	1	255	0
2	13	0	0	0	1	255	0
2	14	0	0	0	1	255	0
2	15	0	0	0	1	255	0
2	16	0	0	0	1	255	0
2	17	0	0	0	1	255	0
2	18	0	0	0	1	255	0
2	19	0	0	0	1	255	0
2	20	0	0	0	1	255	0
2	21	0	0	0	1	255	0
2	22	0	0	0	1	255	0
2	23	0	0	0	1	255	0
2	24	0	0	0	1	255	0

2	25	0	0	0	1	255	0
2	26	0	0	0	1	255	0
2	27	0	0	0	1	255	0
2	28	0	0	0	1	255	0
2	29	0	0	0	1	255	0
2	30	0	0	0	1	255	0
2	31	0	0	0	1	255	0
2	32	0	0	0	1	255	0
2	33	0	0	0	1	255	0
2	34	0	0	0	1	255	0
2	35	0	0	0	1	255	0
2	36	0	0	0	1	255	0
2	37	0	0	0	1	255	0
2	38	0	0	0	1	255	0
2	39	0	0	0	1	255	0
2	40	0	0	0	1	255	0
2	41	0	0	0	1	255	0
2	42	0	0	0	1	255	0
2	43	0	0	0	1	255	0
2	44	0	0	0	1	255	0
2	45	0	0	0	1	255	0
2	46	0	0	0	1	255	0
2	47	0	0	0	1	255	0
2	48	0	0	0	1	255	0
2	49	0	0	0	1	255	0
2	50	0	0	0	1	255	0
2	51	0	0	0	1	255	0
2	52	0	0	0	1	255	0
2	53	0	0	0	1	255	0
2	54	0	0	0	1	255	0
2	55	0	0	0	1	255	0
2	56	0	0	0	1	255	0
2	57	0	0	0	1	255	0
2	58	0	0	0	1	255	0
2	59	0	0	0	1	255	0
2	60	0	0	0	1	255	0
2	61	0	0	0	1	255	0
2	62	0	0	0	1	255	0
2	63	0	0	0	1	255	0
2	64	0	0	0	1	255	0
3	1	0	0	0	1	255	0
3	2	0	0	0	1	255	0
3	3	0	0	0	1	255	0
3	4	0	0	0	1	255	0
3	5	0	0	0	1	255	0
3	6	0	0	0	1	255	0
3	7	0	0	0	1	255	0
3	8	0	0	0	1	255	0
3	9	0	0	0	1	255	0
3	10	0	0	0	1	255	0
3	11	0	0	0	1	255	0
3	12	0	0	0	1	255	0
3	13	0	0	0	1	255	0
3	14	0	0	0	1	255	0
3	15	0	0	0	1	255	0
3	16	0	0	0	1	255	0
3	17	0	0	0	1	255	0
3	18	0	0	0	1	255	0
3	19	0	0	0	1	255	0
3	20	0	0	0	1	255	0

3	21	0	0	0	1	255	0
3	22	0	0	0	1	255	0
3	23	0	0	0	1	255	0
3	24	0	0	0	1	255	0
3	25	0	0	0	1	255	0
3	26	0	0	0	1	255	0
3	27	0	0	0	1	255	0
3	28	0	0	0	1	255	0
3	29	0	0	0	1	255	0
3	30	0	0	0	1	255	0
3	31	0	0	0	1	255	0
3	32	0	0	0	1	255	0
3	33	0	0	0	1	255	0
3	34	0	0	0	1	255	0
3	35	0	0	0	1	255	0
3	36	0	0	0	1	255	0
3	37	0	0	0	1	255	0
3	38	0	0	0	1	255	0
3	39	0	0	0	1	255	0
3	40	0	0	0	1	255	0
3	41	0	0	0	1	255	0
3	42	0	0	0	1	255	0
3	43	0	0	0	1	255	0
3	44	0	0	0	1	255	0
3	45	0	0	0	1	255	0
3	46	0	0	0	1	255	0
3	47	0	0	0	1	255	0
3	48	0	0	0	1	255	0
3	49	0	0	0	1	255	0
3	50	0	0	0	1	255	0
3	51	0	0	0	1	255	0
3	52	0	0	0	1	255	0
3	53	0	0	0	1	255	0
3	54	0	0	0	1	255	0
3	55	0	0	0	1	255	0
3	56	0	0	0	1	255	0
3	57	0	0	0	1	255	0
3	58	0	0	0	1	255	0
3	59	0	0	0	1	255	0
3	60	0	0	0	1	255	0
3	61	0	0	0	1	255	0
3	62	0	0	0	1	255	0
3	63	0	0	0	1	255	0
3	64	0	0	0	1	255	0
4	1	0	0	0	1	255	0
4	2	0	0	0	1	255	0
4	3	0	0	0	1	255	0
4	4	0	0	0	1	255	0
4	5	0	0	0	1	255	0
4	6	0	0	0	1	255	0
4	7	0	0	0	1	255	0
4	8	0	0	0	1	255	0
4	9	0	0	0	1	255	0
4	10	0	0	0	1	255	0
4	11	0	0	0	1	255	0
4	12	0	0	0	1	255	0
4	13	0	0	0	1	255	0
4	14	0	0	0	1	255	0
4	15	0	0	0	1	255	0
4	16	0	0	0	1	255	0

4	17	0	0	0	1	255	0
4	18	0	0	0	1	255	0
4	19	0	0	0	1	255	0
4	20	0	0	0	1	255	0
4	21	0	0	0	1	255	0
4	22	0	0	0	1	255	0
4	23	0	0	0	1	255	0
4	24	0	0	0	1	255	0
4	25	0	0	0	1	255	0
4	26	0	0	0	1	255	0
4	27	0	0	0	1	255	0
4	28	0	0	0	1	255	0
4	29	0	0	0	1	255	0
4	30	0	0	0	1	255	0
4	31	0	0	0	1	255	0
4	32	0	0	0	1	255	0
4	33	0	0	0	1	255	0
4	34	0	0	0	1	255	0
4	35	0	0	0	1	255	0
4	36	0	0	0	1	255	0
4	37	0	0	0	1	255	0
4	38	0	0	0	1	255	0
4	39	0	0	0	1	255	0
4	40	0	0	0	1	255	0
4	41	0	0	0	1	255	0
4	42	0	0	0	1	255	0
4	43	0	0	0	1	255	0
4	44	0	0	0	1	255	0
4	45	0	0	0	1	255	0
4	46	0	0	0	1	255	0
4	47	0	0	0	1	255	0
4	48	0	0	0	1	255	0
4	49	0	0	0	1	255	0
4	50	0	0	0	1	255	0
4	51	0	0	0	1	255	0
4	52	0	0	0	1	255	0
4	53	0	0	0	1	255	0
4	54	0	0	0	1	255	0
4	55	0	0	0	1	255	0
4	56	0	0	0	1	255	0
4	57	0	0	0	1	255	0
4	58	0	0	0	1	255	0
4	59	0	0	0	1	255	0
4	60	0	0	0	1	255	0
4	61	0	0	0	1	255	0
4	62	0	0	0	1	255	0
4	63	0	0	0	1	255	0
4	64	0	0	0	1	255	0

Pedestrian Detector Diagnotics (MM)6-7

Plan	Detector	Counts	Act	Pres	Multiplier

Ontario, CA

ECONOLITE CONTROL. PRODUCTS, INC.

Solutions that Move the World' Trvl

Milliken Ave. @ Fourth St. - 10.211.52.111 - ASC3 - Econolite Type - ASC/3

Configuration Controller Sequence

Phase Ring Sequence.....(Note: Sequences identical to the prior one are not printed)

	01	02	03	04	05	06	07	08	09	10	11	12	13	14	15	16
	B		B		B		B									
Sequence 1																
Ring 1	1	2	3	4	9	10	.	.	.	.	.	.	.	.	.	.
Ring 2	5	6	7	8	11	12	.	.	.	.	.	.	.	.	.	.
Sequence 10																
Ring 1	2	1	3	4	9	10	.	.	.	.	.	.	.	.	.	.
Ring 2	5	6	7	8	11	12	.	.	.	.	.	.	.	.	.	.
Sequence 11																
Ring 1	1	2	4	3	9	10	.	.	.	.	.	.	.	.	.	.
Ring 2	5	6	7	8	11	12	.	.	.	.	.	.	.	.	.	.
Sequence 12																
Ring 1	1	2	3	4	9	10	.	.	.	.	.	.	.	.	.	.
Ring 2	6	5	7	8	11	12	.	.	.	.	.	.	.	.	.	.
Sequence 13																
Ring 1	1	2	3	4	9	10	.	.	.	.	.	.	.	.	.	.
Ring 2	5	6	8	7	11	12	.	.	.	.	.	.	.	.	.	.
Sequence 14																
Ring 1	1	2	3	4	10	9	.	.	.	.	.	.	.	.	.	.
Ring 2	5	6	7	8	11	12	.	.	.	.	.	.	.	.	.	.
Sequence 15																
Ring 1	1	2	3	4	9	10	.	.	.	.	.	.	.	.	.	.
Ring 2	5	6	7	8	12	11	.	.	.	.	.	.	.	.	.	.
Sequence 16																
Ring 1	1	2	3	4	9	10	.	.	.	.	.	.	.	.	.	.
Ring 2	5	6	7	8	11	12	.	.	.	.	.	.	.	.	.	.

Phase	1	2	3	4	5	6	7	8	9	10	11	12	13	14	15	16

Hardware Alternate Sequence Enable: No

Ontario, CA

ECONOLITE CONTROL. PRODUCTS, INC.

Solutions that Move the World' Trvl

Milliken Ave. @ Fourth St. - 10.211.52.111 - ASC3 - Econolite Type - ASC/3

Configuration Port 1 (SDLC)

Port 1 SDLC (MM) 1-4-1

BIU	1	2	3	4	5	6	7	8
Term & Facility								
Detector Rack								

Enable TS2/MMU Type Cabinet: Yes
Enable MMU Extended Status: Yes
Enable SDLC Stop Time: Yes
Enable 3 Critical RFE's Lockup: Yes

MMU Program (MM) 1-4-2

Channel Can Serve With Channel	
Channel 1	**Channel 2**
1	5
1	6
1	11
2	5
2	6
2	9
2	11
3	7
3	8
3	12
4	7
4	8
4	10
4	12
5	9
6	9
6	11
7	10
8	10
8	12
9	11
10	12

Color Check Enable (MM) 1-4-3

Enable Color Check: No

MMU/LS	1	2	3	4	5	6	7	8	9	10	11	12	13	14	15	16
Green																
Yellow																
Red																

Secondary Stations/Tests (MM) 1-4-4

ID	1	2	3	4	5	6	7	8	MMU
Term & Facility									

ID	1	2	3	4	5	6	7	8	Diag
Detector Rack									

Enable SDLC Diagnostic Test: No

Ontario, CA

ECONOLITE CONTROL. PRODUCTS, INC.

Solutions that Move the World' Trvl

Milliken Ave. @ Fourth St. - 10.211.52.111 - ASC3 - Econolite Type - ASC/3

Configuration Communications 1 (SDLC)

Ethernet Port Configuration (MM) 1-5-1

Controller IP:	10.211.52.111
Subnet Mask:	255.255.255.0
Default Gateway IP:	10.211.52.1
Server IP:	10.10.5.28

NTCIP (MM) 1-5-5

NTCIP Backup Time (Sec):	0
NTCIP UDP Port:	501
Ethernet Priority:	1
Port 2 Priority (Port C50S for 2070):	4
Port 3A Priority (Port C21S for 2070):	2
Port 3B Priority (Port C22S for 2070):	3

Port Configuration (MM) 1-5-2 to 1-5-4

Port	2 (C50S)	3A (C21S)	3B (C22S)
Protocol	TERMINAL	NTCIP	ECPIP
Enable	Yes	No	Yes
Data Rate (BPS)	38.4K	19.2K	1200
Data, Parity, Stop	8 N 1	8 N 1	8 O 1
Address	0	0	1
Telemetry Response Delay	0.0	0.0	0.9
Duplex - Half or Full	Full	Full	Full
Flow Control	No	Yes	Yes
Group Address	0	0	0
Single Flag Enable	Yes	Yes	Yes
RTS to CTS Delay	n/a	n/a	3.0
RTS Turn Off Delay	n/a	n/a	2.0
Dropout Time	10	10	300
Early RTS	n/a	n/a	No
Telemetry Mode	n/a	n/a	FSK
ATCS Railroad	0	n/a	n/a
ATCS Railroad Line	0	n/a	n/a
ATCS Group	0	n/a	n/a
Wayside Device	0	n/a	n/a
ATC Device	0	n/a	n/a
Wayside Subnode	0	n/a	n/a
ATC Subnode	0	n/a	n/a

ECPIP (MM) 1-5-6

Controller Address:	1
Expanded System Detector Address:	0

System Detector Assignment

System Detector	Local Detector

Ontario, CA

ECONOLITE CONTROL. PRODUCTS, INC.

Solutions that Move the World' Trvl

Milliken Ave. @ Fourth St. - 10.211.52.111 - ASC3 - Econolite Type - ASC/3

Configuration Logging / Display

Event Logging (MM) 1-6-1

Critical RFE's (MMU/TF)	Yes	3 Critical Errors Within 24 Hours	Yes
MMU Flash Faults	Yes	Local Flash Fault	Yes
Non-Critical RFE's (Det/Test)	Yes	Detector Errors	Yes
Coordination Errors	Yes	Controller Download	Yes
Preemption Events	Yes	TSP Events	Yes
Power On/Off	Yes	Low Battery	Yes
Access	Yes	Data Change	Yes
Online / Offline	Yes		

Alarm Event	1	2	3	4	5	6	7	8	9	10	11	12	13	14	15	16
Enable Logging	X	X	X	X	X	X	X	X	X	X	X	X	X	X	X	X

Display Options (MM) 1-7-2

Key Click Enable:	Yes
Backlight Enable:	Yes
LED Mode:	Auto
Display Mode:	Basic
Screen Format:	Basic
Trans Mode Pop-Up Disable:	No

Sign On (MM) 8-5

Sign On Message Line 1: City of Ontario
Sign On Message Line 2: Milliken @ Fourth

Software Modules (MM) 8-7

Application Version: 02.59.00
OS (Boot) Version: 01.14.03

Ontario, CA

ECONOLITE CONTROL. PRODUCTS, INC.

Solutions that Move the World' Trvl

Milliken Ave. @ Fourth St. - 10.211.52.111 - ASC3 - Econolite Type - ASC/3

Logic Processor Page 1

Logic Statement Control (MM) 1-8-1

Logic #	Statement Control

Ontario, CA

ECONOLITE CONTROL. PRODUCTS, INC.

Solutions that Move the World' Trvl

Milliken Ave. @ Fourth St. - 10.211.52.111 - ASC3 - Econolite Type - ASC/3

Logic Processor Page 2

Logic Statements (MM) 1-8-2

Ontario, CA

IB ECONOUTE CONTROL. PRODUCTS. INC.

Solutions that Move the World Trvl

Milliken Ave. @ Fourth St. - 10.211.52.111 - ASC3 - Econolite Type - ASC/3

Controller Timing Plan (MM) 2-1

Plan 1

Phase	1	2	3	4	5	6	7	8	9	10	11	12	13	14	15	16
Direction																
Min Green	9	9	11	11	9	9	11	11	5	5	5	5	5	5	5	5
Bk Min Green	0	0	0	0	0	0	0	0	0	0	0	0	0	0	0	0
CS Min Green	0	0	0	0	0	0	0	0	0	0	0	0	0	0	0	0
Delay Green	0	0	0	0	0	0	0	0	0	0	0	0	0	0	0	0
Walk	0	5	0	5	0	5	0	5	0	10	0	10	0	10	0	10
Walk2	0	0	0	0	0	0	0	0	0	0	0	0	0	0	0	0
Walk Max	0	0	0	0	0	0	0	0	0	0	0	0	0	0	0	0
Ped Clear	0	37	0	43	0	37	0	43	0	16	0	16	0	16	0	16
Ped Clear 2	0	0	0	0	0	0	0	0	0	0	0	0	0	0	0	0
Ped Clear Max	0	0	0	0	0	0	0	0	0	0	0	0	0	0	0	0
Ped CO	0	0	0	0	0	0	0	0	0	0	0	0	0	0	0	0
Vehicle Ext	2.0	3.5	2.0	3.0	2.0	3.5	2.0	3.0	5.0	5.0	5.0	5.0	5.0	5.0	5.0	5.0
Vehicle Ext 2	0.0	0.0	0.0	0.0	0.0	0.0	0.0	0.0	0.0	0.0	0.0	0.0	0.0	0.0	0.0	0.0
Max1	20	45	20	35	20	45	20	35	35	35	35	35	35	35	35	35
Max2	0	0	0	0	0	0	0	0	40	40	40	40	40	40	40	40
Max3	0	0	0	0	0	0	0	0	0	0	0	0	0	0	0	0
DYM Max	25	40	25	35	25	40	25	35	0	0	0	0	0	0	0	0
Dym Step	5.0	5.0	5.0	5.0	5.0	5.0	5.0	5.0	0.0	0.0	0.0	0.0	0.0	0.0	0.0	0.0
Yellow	5.0	5.0	5.5	5.5	5.0	5.0	5.5	5.5	3.0	3.0	3.0	3.0	3.0	3.0	3.0	3.0
Red Clear	2.0	2.0	2.0	2.0	2.0	2.0	2.0	2.0	1.0	1.0	1.0	1.0	1.0	1.0	1.0	1.0
Red Max	0.0	0.0	0.0	0.0	0.0	0.0	0.0	0.0	0.0	0.0	0.0	0.0	0.0	0.0	0.0	0.0
Red Revert	5.0	5.0	2.0	2.0	5.0	5.0	2.0	2.0	2.0	2.0	2.0	2.0	2.0	2.0	2.0	2.0
Act B4	0	0	0	0	0	0	0	0	0	0	0	0	0	0	0	0
Sec/Act	0.0	0.0	0.0	0.0	0.0	0.0	0.0	0.0	0.0	0.0	0.0	0.0	0.0	0.0	0.0	0.0
Max Int	0	0	0	0	0	0	0	0	0	0	0	0	0	0	0	0
Time B4	0	15	0	10	0	15	0	10	0	0	0	0	0	0	0	0
Cars Wt	0	0	0	0	0	0	0	0	0	0	0	0	0	0	0	0
STPTDuc	0.0	0.0	0.0	0.0	0.0	0.0	0.0	0.0	0.0	0.0	0.0	0.0	0.0	0.0	0.0	0.0
TTReduc	0	20	0	15	0	20	0	15	0	0	0	0	0	0	0	0
Min Gap	0.0	0.0	0.0	0.0	0.0	0.0	0.0	0.0	0.0	0.0	0.0	0.0	0.0	0.0	0.0	0.0

Plan 2

Phase	1	2	3	4	5	6	7	8	9	10	11	12	13	14	15	16
Direction																
Min Green	5	5	5	5	5	5	5	5	5	5	5	5	5	5	5	5
Bk Min Green	0	0	0	0	0	0	0	0	0	0	0	0	0	0	0	0
CS Min Green	0	0	0	0	0	0	0	0	0	0	0	0	0	0	0	0
Delay Green	0	0	0	0	0	0	0	0	0	0	0	0	0	0	0	0
Walk	0	10	0	10	0	10	0	10	0	10	0	10	0	10	0	10
Walk2	0	0	0	0	0	0	0	0	0	0	0	0	0	0	0	0
Walk Max	0	0	0	0	0	0	0	0	0	0	0	0	0	0	0	0
Ped Clear	0	16	0	16	0	16	0	16	0	16	0	16	0	16	0	16
Ped Clear 2	0	0	0	0	0	0	0	0	0	0	0	0	0	0	0	0
Ped Clear Max	0	0	0	0	0	0	0	0	0	0	0	0	0	0	0	0
Ped CO	0	0	0	0	0	0	0	0	0	0	0	0	0	0	0	0
Vehicle Ext	5.0	5.0	5.0	5.0	5.0	5.0	5.0	5.0	5.0	5.0	5.0	5.0	5.0	5.0	5.0	5.0
Vehicle Ext 2	0.0	0.0	0.0	0.0	0.0	0.0	0.0	0.0	0.0	0.0	0.0	0.0	0.0	0.0	0.0	0.0
Max1	35	35	35	35	35	35	35	35	35	35	35	35	35	35	35	35
Max2	40	40	40	40	40	40	40	40	40	40	40	40	40	40	40	40
Max3	0	0	0	0	0	0	0	0	0	0	0	0	0	0	0	0
DYM Max	0	0	0	0	0	0	0	0	0	0	0	0	0	0	0	0
Dym Step	0.0	0.0	0.0	0.0	0.0	0.0	0.0	0.0	0.0	0.0	0.0	0.0	0.0	0.0	0.0	0.0
Yellow	3.0	3.0	3.0	3.0	3.0	3.0	3.0	3.0	3.0	3.0	3.0	3.0	3.0	3.0	3.0	3.0
Red Clear	1.0	1.0	1.0	1.0	1.0	1.0	1.0	1.0	1.0	1.0	1.0	1.0	1.0	1.0	1.0	1.0
Red Max	0.0	0.0	0.0	0.0	0.0	0.0	0.0	0.0	0.0	0.0	0.0	0.0	0.0	0.0	0.0	0.0

Red Revert	2.0	2.0	2.0	2.0	2.0	2.0	2.0	2.0	2.0	2.0	2.0	2.0	2.0	2.0	2.0	2.0
Act B4	0	0	0	0	0	0	0	0	0	0	0	0	0	0	0	0
Sec/Act	0.0	0.0	0.0	0.0	0.0	0.0	0.0	0.0	0.0	0.0	0.0	0.0	0.0	0.0	0.0	0.0
Max Int	0	0	0	0	0	0	0	0	0	0	0	0	0	0	0	0
Time B4	0	0	0	0	0	0	0	0	0	0	0	0	0	0	0	0
Cars Wt	0	0	0	0	0	0	0	0	0	0	0	0	0	0	0	0
STPTDuc	0.0	0.0	0.0	0.0	0.0	0.0	0.0	0.0	0.0	0.0	0.0	0.0	0.0	0.0	0.0	0.0
TTReduc	0	0	0	0	0	0	0	0	0	0	0	0	0	0	0	0
Min Gap	0.0	0.0	0.0	0.0	0.0	0.0	0.0	0.0	0.0	0.0	0.0	0.0	0.0	0.0	0.0	0.0

Plan 3

Phase	1	2	3	4	5	6	7	8	9	10	11	12	13	14	15	16
Direction																
Min Green	5	5	5	5	5	5	5	5	5	5	5	5	5	5	5	5
Bk Min Green	0	0	0	0	0	0	0	0	0	0	0	0	0	0	0	0
CS Min Green	0	0	0	0	0	0	0	0	0	0	0	0	0	0	0	0
Delay Green	0	0	0	0	0	0	0	0	0	0	0	0	0	0	0	0
Walk	0	10	0	10	0	10	0	10	0	10	0	10	0	10	0	10
Walk2	0	0	0	0	0	0	0	0	0	0	0	0	0	0	0	0
Walk Max	0	0	0	0	0	0	0	0	0	0	0	0	0	0	0	0
Ped Clear	0	16	0	16	0	16	0	16	0	16	0	16	0	16	0	16
Ped Clear 2	0	0	0	0	0	0	0	0	0	0	0	0	0	0	0	0
Ped Clear Max	0	0	0	0	0	0	0	0	0	0	0	0	0	0	0	0
Ped CO	0	0	0	0	0	0	0	0	0	0	0	0	0	0	0	0
Vehicle Ext	5.0	5.0	5.0	5.0	5.0	5.0	5.0	5.0	5.0	5.0	5.0	5.0	5.0	5.0	5.0	5.0
Vehicle Ext 2	0.0	0.0	0.0	0.0	0.0	0.0	0.0	0.0	0.0	0.0	0.0	0.0	0.0	0.0	0.0	0.0
Max1	35	35	35	35	35	35	35	35	35	35	35	35	35	35	35	35
Max2	40	40	40	40	40	40	40	40	40	40	40	40	40	40	40	40
Max3	0	0	0	0	0	0	0	0	0	0	0	0	0	0	0	0
DYM Max	0	0	0	0	0	0	0	0	0	0	0	0	0	0	0	0
Dym Step	0.0	0.0	0.0	0.0	0.0	0.0	0.0	0.0	0.0	0.0	0.0	0.0	0.0	0.0	0.0	0.0
Yellow	3.0	3.0	3.0	3.0	3.0	3.0	3.0	3.0	3.0	3.0	3.0	3.0	3.0	3.0	3.0	3.0
Red Clear	1.0	1.0	1.0	1.0	1.0	1.0	1.0	1.0	1.0	1.0	1.0	1.0	1.0	1.0	1.0	1.0
Red Max	0.0	0.0	0.0	0.0	0.0	0.0	0.0	0.0	0.0	0.0	0.0	0.0	0.0	0.0	0.0	0.0
Red Revert	2.0	2.0	2.0	2.0	2.0	2.0	2.0	2.0	2.0	2.0	2.0	2.0	2.0	2.0	2.0	2.0
Act B4	0	0	0	0	0	0	0	0	0	0	0	0	0	0	0	0
Sec/Act	0.0	0.0	0.0	0.0	0.0	0.0	0.0	0.0	0.0	0.0	0.0	0.0	0.0	0.0	0.0	0.0
Max Int	0	0	0	0	0	0	0	0	0	0	0	0	0	0	0	0
Time B4	0	0	0	0	0	0	0	0	0	0	0	0	0	0	0	0
Cars Wt	0	0	0	0	0	0	0	0	0	0	0	0	0	0	0	0
STPTDuc	0.0	0.0	0.0	0.0	0.0	0.0	0.0	0.0	0.0	0.0	0.0	0.0	0.0	0.0	0.0	0.0
TTReduc	0	0	0	0	0	0	0	0	0	0	0	0	0	0	0	0
Min Gap	0.0	0.0	0.0	0.0	0.0	0.0	0.0	0.0	0.0	0.0	0.0	0.0	0.0	0.0	0.0	0.0

Plan 4

Phase	1	2	3	4	5	6	7	8	9	10	11	12	13	14	15	16
Direction																
Min Green	5	5	5	5	5	5	5	5	5	5	5	5	5	5	5	5
Bk Min Green	0	0	0	0	0	0	0	0	0	0	0	0	0	0	0	0
CS Min Green	0	0	0	0	0	0	0	0	0	0	0	0	0	0	0	0
Delay Green	0	0	0	0	0	0	0	0	0	0	0	0	0	0	0	0
Walk	0	10	0	10	0	10	0	10	0	10	0	10	0	10	0	10
Walk2	0	0	0	0	0	0	0	0	0	0	0	0	0	0	0	0
Walk Max	0	0	0	0	0	0	0	0	0	0	0	0	0	0	0	0
Ped Clear	0	16	0	16	0	16	0	16	0	16	0	16	0	16	0	16
Ped Clear 2	0	0	0	0	0	0	0	0	0	0	0	0	0	0	0	0
Ped Clear Max	0	0	0	0	0	0	0	0	0	0	0	0	0	0	0	0
Ped CO	0	0	0	0	0	0	0	0	0	0	0	0	0	0	0	0
Vehicle Ext	5.0	5.0	5.0	5.0	5.0	5.0	5.0	5.0	5.0	5.0	5.0	5.0	5.0	5.0	5.0	5.0
Vehicle Ext 2	0.0	0.0	0.0	0.0	0.0	0.0	0.0	0.0	0.0	0.0	0.0	0.0	0.0	0.0	0.0	0.0
Max1	35	35	35	35	35	35	35	35	35	35	35	35	35	35	35	35
Max2	40	40	40	40	40	40	40	40	40	40	40	40	40	40	40	40
Max3	0	0	0	0	0	0	0	0	0	0	0	0	0	0	0	0
DYM Max	0	0	0	0	0	0	0	0	0	0	0	0	0	0	0	0
Dym Step	0.0	0.0	0.0	0.0	0.0	0.0	0.0	0.0	0.0	0.0	0.0	0.0	0.0	0.0	0.0	0.0
Yellow	3.0	3.0	3.0	3.0	3.0	3.0	3.0	3.0	3.0	3.0	3.0	3.0	3.0	3.0	3.0	3.0
Red Clear	1.0	1.0	1.0	1.0	1.0	1.0	1.0	1.0	1.0	1.0	1.0	1.0	1.0	1.0	1.0	1.0
Red Max	0.0	0.0	0.0	0.0	0.0	0.0	0.0	0.0	0.0	0.0	0.0	0.0	0.0	0.0	0.0	0.0
Red Revert	2.0	2.0	2.0	2.0	2.0	2.0	2.0	2.0	2.0	2.0	2.0	2.0	2.0	2.0	2.0	2.0
Act B4	0	0	0	0	0	0	0	0	0	0	0	0	0	0	0	0
Sec/Act	0.0	0.0	0.0	0.0	0.0	0.0	0.0	0.0	0.0	0.0	0.0	0.0	0.0	0.0	0.0	0.0
Max Int	0	0	0	0	0	0	0	0	0	0	0	0	0	0	0	0
Time B4	0	0	0	0	0	0	0	0	0	0	0	0	0	0	0	0
Cars Wt	0	0	0	0	0	0	0	0	0	0	0	0	0	0	0	0
STPTDuc	0.0	0.0	0.0	0.0	0.0	0.0	0.0	0.0	0.0	0.0	0.0	0.0	0.0	0.0	0.0	0.0
TTReduc	0	0	0	0	0	0	0	0	0	0	0	0	0	0	0	0
Min Gap	0.0	0.0	0.0	0.0	0.0	0.0	0.0	0.0	0.0	0.0	0.0	0.0	0.0	0.0	0.0	0.0

Ontario, CA

ECONOLITE CONTROL. PRODUCTS, INC.

Solutions that Move the World' Trvl

Milliken Ave. @ Fourth St. - 10.211.52.111 - ASC3 - Econolite Type - ASC/3

Controller Overlaps

Vehicle Overlaps (MM) 2-2

Overlap	Type	Lag Green	Yellow	Red	Adv. Green

Phases

Overlap	Phase	Included	Protect	Ped Protect	Not Overlap	Modifier	Lag X Phases	Lag 2 Phases	Flash Green

PPLT FYA

Overlap	Protected Phase (Left Turn)	Permissive Phase (Opposing Thru)	Flashing Arrow Output	Flashing Arrow Output CH	Delay Start of FYA	Delay Start of Clearance	Action Plan SF Bit Disable	Ped Protected Enable

Guaranteed Minimum Time Data (MM) 2-4

Phase	Min Green	Walk	Ped Clear	Yellow	Red Clear	Overlap Green
A01	5	0	7	3.0	0.0	5
B02	5	0	7	3.0	0.0	5
C03	5	0	7	3.0	0.0	5
D04	5	0	7	3.0	0.0	5
E05	5	0	7	3.0	0.0	5
F06	5	0	7	3.0	0.0	5
G07	5	0	7	3.0	0.0	5
H08	5	0	7	3.0	0.0	5
I09	5	0	7	3.0	0.0	5
J10	5	0	7	3.0	0.0	5
K11	5	0	7	3.0	0.0	5
L12	5	0	7	3.0	0.0	5
M13	5	0	7	3.0	0.0	5
N14	5	0	7	3.0	0.0	5
O15	5	0	7	3.0	0.0	5
P16	5	0	7	3.0	0.0	5

Ontario, CA

ECONOLITE CONTROL. PRODUCTS, INC.

Solutions that Move the World' Trvl

Milliken Ave. @ Fourth St. - 10.211.52.111 - ASC3 - Econolite Type - ASC/3

Controller Pedestrian Overlaps
Vehicle / Pedestrian Overlaps (MM) 2-3

Included	Pedestrian Overlaps

Ontario, CA

ECONOLITE CONTROL. PRODUCTS, INC.

Solutions that Move the World' Trvl

Milliken Ave. @ Fourth St. - 10.211.52.111 - ASC3 - Econolite Type - ASC/3

Controller Start / Flash Data (MM) 2-5

Start Up

Phase	Phase Setting
1	.
2	Y
3	.
4	.
5	.
6	Y
7	.
8	.
9	.
10	.
11	.
12	.
13	.
14	.
15	.
16	.

Overlap
A
B
C
D

Flash Thru Mon: No
Flash Time: 15
All Red: 6
Power Start Seq: 1
MUTCD Enabled: No
Y->G: n/a

Automatic Flash

Entry
2
6

Exit
2
6

Overlap Exit
A
B
C
D

Flash Thru Mon: No
Exit Flash: W
Minimum Flash: 5
Mimimum Recall: No
Cycle Through Phase: No

Ontario, CA

ECONOLITE CONTROL. PRODUCTS, INC.

Solutions that Move the World' Trvl

Milliken Ave. @ Fourth St. - 10.211.52.111 - ASC3 - Econolite Type - ASC/3

Controller Options

Controller Options (MM) 2-6-1

Phase	1	2	3	4	5	6	7	8	9	10	11	12	13	14	15	16
Flashing Grn Ph	.	.	.	.	.	.	.	.	.	.	.	.	.	.	.	.
Guar Passage																
Non-Act I																
Non-Act II																
Dual Entry		X		X		X		X								
Cond Service																
Cond Reservice																
Ped Re-Service																
Rest In Walk																
Flashing Walk																
Ped Clr-Yel																
Ped Clr-Red																
IGRN + Veh Ext																

Ped Clear Protect: Off Unit Red Revert: 2.0 MUTCD 3 Seconds Don't Walk: No

Pre-Timed Mode (MM) 2-7

Enable Pre-Timed Mode: No Free Input Disables Pre-Timed: No

Phase	1	2	3	4	5	6	7	8	9	10	11	12	13	14	15	16
Pre-Timed																

Phase Recall Options (MM) 2-8

Plan # 1

	1	2	3	4	5	6	7	8	9	10	11	12	13	14	15	16
Lock Detector																
Vehicle Recall				X				X								
Ped Recall																
Max Recall																
Soft Recall																
No Rest																
AI Calc																

Ontario, CA

ECONOLITE CONTROL. PRODUCTS, INC.

Solutions that Move the World' Trvl

Milliken Ave. @ Fourth St. - 10.211.52.111 - ASC3 - Econolite Type - ASC/3

Coordination Options

Options (MM) 3-1

Manual Pattern	Free	ECPI Coord	Yes
System Source	TBC	System Format	STD
Splits In	Seconds	Offsets In	Seconds
Transition	Smooth	Max Select	MAXINH
Dwell / Add Time	0		
Delay Coord Wk-LZ	No	Force Off	Float
Offset Reference	Lead	Use Ped Time	Yes
Ped Recall	No	Ped Reservice	No
Local Zero Override	No	FO Added Ini Green	No
Re-sync Count	0	Multisync	No

Auto Perm Minimum Green (Seconds) (MM) 3-4

Phase	1	2	3	4	5	6	7	8	9	10	11	12	13	14	15	16
Minimum Green	0	0	0	0	0	0	0	0	0	0	0	0	0	0	0	0

Split Demand (MM) 3-5

Phase	1	2	3	4	5	6	7	8	9	10	11	12	13	14	15	16
Demand 1																
Demand 2																

Demand	1	2
Detector	0	0
Call Time (Sec)	0	0
Cycle Count	0	0

Ontario, CA

ECONOLITE CONTROL. PRODUCTS, INC.

Solutions that Move the World' Trvl

Milliken Ave. @ Fourth St. - 10.211.52.111 - ASC3 - Econolite Type - ASC/3

Coordination Pattern Data
Coordinator Pattern Data (MM) 3-2

Coordinator Pattern # 31

Split Pattern	31	TS2 (Pat-Off)	10-1	Splits In	Seconds
Cycle	120	Std (COS)	0	Offsets In	Seconds
Offset Value	80s	Dwell/Add Time	0		
Actuated Coord	Yes	Timing Plan	0		
Actuated Walk Rest	No	Sequence	12		
Phase Reservice	No	Action Plan	0		
Max Select	MAX 1	Force Off	Fixed		

Split Preference Phases

Phase	1	2	3	4	5	6	7	8	9	10	11	12	13	14	15	16
Description																
Splits (Split Pat 31)	17	38	25	40	17	38	21	42	0	0	0	0	0	0	0	0
Pref 1	0	0	0	0	0	0	0	0	0	0	0	0	0	0	0	0
Pref 2	0	0	0	0	0	0	0	0	0	0	0	0	0	0	0	0

Ring	1	2	3	4
Ring Split Ext	0	0	0	0
Ring Displacement	-	0	0	0
Split Sum	120s	118s	0s	0s

Misc. Data

Veh Perm 1	0	Veh Perm 2	0	Veh Perm 2 Disp	0
Split Demand Pat 1	0	Split Demand Pat 2	0	Crossing Arterial Pat	0

Split Pattern

Phase	1	2	3	4	5	6	7	8	9	10	11	12	13	14	15	16
Coord Phase		X				X										
Vehicle Recall																
Pedestrian Recall																
Recall to Max. Time																
Omit Phase									X	X	X	X	X	X	X	X
Special Funciton Outputs								X								

Coordinator Pattern # 32

Split Pattern	32	TS2 (Pat-Off)	10-2	Splits In	Seconds
Cycle	120	Std (COS)	0	Offsets In	Seconds
Offset Value	39s	Dwell/Add Time	0		
Actuated Coord	Yes	Timing Plan	0		
Actuated Walk Rest	No	Sequence	1		
Phase Reservice	No	Action Plan	0		
Max Select	MAX 1	Force Off	Fixed		

Split Preference Phases

Phase	1	2	3	4	5	6	7	8	9	10	11	12	13	14	15	16
Description																
Splits (Split Pat 32)	22	34	26	38	21	35	20	44	0	0	0	0	0	0	0	0
Pref 1	0	0	0	0	0	0	0	0	0	0	0	0	0	0	0	0
Pref 2	0	0	0	0	0	0	0	0	0	0	0	0	0	0	0	0

Ring	1	2	3	4
Ring Split Ext	0	0	0	0
Ring Displacement	-	0	0	0
Split Sum	120s	120s	0s	0s

Misc. Data

Veh Perm 1	0	Veh Perm 2	0	Veh Perm 2 Disp	0
Split Demand Pat 1	0	Split Demand Pat 2	0	Crossing Arterial Pat	0

Split Pattern

Phase	1	2	3	4	5	6	7	8	9	10	11	12	13	14	15	16
Coord Phase		X				X										
Vehicle Recall																
Pedestrian Recall																
Recall to Max. Time																
Omit Phase									X	X	X	X	X	X	X	X
Special Funciton Outputs																

Coordinator Pattern # 33

Split Pattern	33	TS2 (Pat-Off)	10-3	Splits In	Seconds
Cycle	120	Std (COS)	0	Offsets In	Seconds
Offset Value	24s	Dwell/Add Time	0		
Actuated Coord	Yes	Timing Plan	0		
Actuated Walk Rest	No	Sequence	1		
Phase Reservice	No	Action Plan	0		
Max Select	MAX 1	Force Off	Fixed		

Split Preference Phases

Phase	1	2	3	4	5	6	7	8	9	10	11	12	13	14	15	16
Description																
Splits (Split Pat 33)	21	40	20	39	19	38	20	39	0	0	0	0	0	0	0	0
Pref 1	0	0	0	0	0	0	0	0	0	0	0	0	0	0	0	0
Pref 2	0	0	0	0	0	0	0	0	0	0	0	0	0	0	0	0

Ring	1	2	3	4
Ring Split Ext	0	0	0	0
Ring Displacement	-	0	0	0
Split Sum	120s	116s	0s	0s

Misc. Data

Veh Perm 1	0	Veh Perm 2	0	Veh Perm 2 Disp	0
Split Demand Pat 1	0	Split Demand Pat 2	0	Crossing Arterial Pat	0

Split Pattern

Phase	1	2	3	4	5	6	7	8	9	10	11	12	13	14	15	16
Coord Phase		X				X										
Vehicle Recall																
Pedestrian Recall																
Recall to Max. Time																
Omit Phase									X	X	X	X	X	X	X	X
Special Funciton Outputs																

Coordinator Pattern # 42

Split Pattern	32	TS2 (Pat-Off)	13-3	Splits In	Seconds
Cycle	120	Std (COS)	0	Offsets In	Seconds
Offset Value	80s	Dwell/Add Time	0		
Actuated Coord	Yes	Timing Plan	0		
Actuated Walk Rest	No	Sequence	12		
Phase Reservice	No	Action Plan	0		
Max Select	MAX 1	Force Off	Fixed		

Split Preference Phases

Phase	1	2	3	4	5	6	7	8	9	10	11	12	13	14	15	16
Description																
Splits (Split Pat 32)	22	34	26	38	21	35	20	44	0	0	0	0	0	0	0	0
Pref 1	0	0	0	0	0	0	0	0	0	0	0	0	0	0	0	0
Pref 2	0	0	0	0	0	0	0	0	0	0	0	0	0	0	0	0

Ring	1	2	3	4
Ring Split Ext	0	0	0	0
Ring Displacement	-	0	0	0
Split Sum	120s	120s	0s	0s

Misc. Data

Veh Perm 1	0	Veh Perm 2	0	Veh Perm 2 Disp	0
Split Demand Pat 1	0	Split Demand Pat 2	0	Crossing Arterial Pat	0

Split Pattern

Phase	1	2	3	4	5	6	7	8	9	10	11	12	13	14	15	16
Coord Phase		X				X										
Vehicle Recall																
Pedestrian Recall																
Recall to Max. Time																
Omit Phase									X	X	X	X	X	X	X	X
Special Funciton Outputs																

Coordinator Pattern # 61

Split Pattern	61	TS2 (Pat-Off)	0-0	Splits In	Seconds
Cycle	100	Std (COS)	0	Offsets In	Seconds
Offset Value	68s	Dwell/Add Time	0		
Actuated Coord	Yes	Timing Plan	0		
Actuated Walk Rest	No	Sequence	11		
Phase Reservice	No	Action Plan	0		
Max Select	None	Force Off	None		

Split Preference Phases

Phase	1	2	3	4	5	6	7	8	9	10	11	12	13	14	15	16
Description																
Splits (Split Pat 61)	25	20	15	41	18	26	17	39	0	0	0	0	0	0	0	0
Pref 1	0	0	0	0	0	0	0	0	0	0	0	0	0	0	0	0
Pref 2	0	0	0	0	0	0	0	0	0	0	0	0	0	0	0	0

Ring	1	2	3	4
Ring Split Ext	0	0	0	0
Ring Displacement	-	0	0	0
Split Sum	101s	100s	0s	0s

Misc. Data

Veh Perm 1	0	Veh Perm 2	0	Veh Perm 2 Disp	0
Split Demand Pat 1	0	Split Demand Pat 2	0	Crossing Arterial Pat	0

Split Pattern

Phase	1	2	3	4	5	6	7	8	9	10	11	12	13	14	15	16
Coord Phase				X				X								
Vehicle Recall				X				X								
Pedestrian Recall																
Recall to Max. Time																
Omit Phase									X	X	X	X	X	X	X	X
Special Funciton Outputs																

Coordinator Pattern # 62

Split Pattern	62	TS2 (Pat-Off)	0-0	Splits In	Seconds
Cycle	100	Std (COS)	0	Offsets In	Seconds
Offset Value	90s	Dwell/Add Time	0		
Actuated Coord	Yes	Timing Plan	0		
Actuated Walk Rest	No	Sequence	11		
Phase Reservice	No	Action Plan	0		
Max Select	None	Force Off	None		

Split Preference Phases

Phase	1	2	3	4	5	6	7	8	9	10	11	12	13	14	15	16
Description																
Splits (Split Pat 62)	15	31	21	33	15	31	15	39	0	0	0	0	0	0	0	0
Pref 1	0	0	0	0	0	0	0	0	0	0	0	0	0	0	0	0
Pref 2	0	0	0	0	0	0	0	0	0	0	0	0	0	0	0	0

Ring	1	2	3	4
Ring Split Ext	0	0	0	0
Ring Displacement	-	0	0	0
Split Sum	100s	100s	0s	0s

Misc. Data

Veh Perm 1	0	Veh Perm 2	0	Veh Perm 2 Disp	0
Split Demand Pat 1	0	Split Demand Pat 2	0	Crossing Arterial Pat	0

Split Pattern

Phase	1	2	3	4	5	6	7	8	9	10	11	12	13	14	15	16
Coord Phase				X				X								
Vehicle Recall				X				X								
Pedestrian Recall																
Recall to Max. Time																
Omit Phase									X	X	X	X	X	X	X	X
Special Funciton Outputs																

Coordinator Pattern # 63

Split Pattern	63	TS2 (Pat-Off)	0-0	Splits In	Seconds
Cycle	100	Std (COS)	0	Offsets In	Seconds
Offset Value	59s	Dwell/Add Time	0		
Actuated Coord	Yes	Timing Plan	0		
Actuated Walk Rest	No	Sequence	11		
Phase Reservice	No	Action Plan	0		
Max Select	None	Force Off	None		

Split Preference Phases

Phase	1	2	3	4	5	6	7	8	9	10	11	12	13	14	15	16
Description																
Splits (Split Pat 63)	20	28	18	34	14	34	17	35	0	0	0	0	0	0	0	0
Pref 1	0	0	0	0	0	0	0	0	0	0	0	0	0	0	0	0
Pref 2	0	0	0	0	0	0	0	0	0	0	0	0	0	0	0	0

Ring	1	2	3	4
Ring Split Ext	0	11	0	0
Ring Displacement	-	0	0	0
Split Sum	100s	100s	0s	0s

Misc. Data

Veh Perm 1	0	Veh Perm 2	0	Veh Perm 2 Disp	0
Split Demand Pat 1	0	Split Demand Pat 2	0	Crossing Arterial Pat	0

Split Pattern

Phase	1	2	3	4	5	6	7	8	9	10	11	12	13	14	15	16
Coord Phase				X				X								
Vehicle Recall				X				X								
Pedestrian Recall																
Recall to Max. Time																
Omit Phase									X	X	X	X	X	X	X	X
Special Funciton Outputs																

Coordinator Pattern # 64

Split Pattern	64	TS2 (Pat-Off)	0-0	Splits In	Seconds
Cycle	100	Std (COS)	0	Offsets In	Seconds
Offset Value	20s	Dwell/Add Time	0		
Actuated Coord	Yes	Timing Plan	0		
Actuated Walk Rest	No	Sequence	11		
Phase Reservice	No	Action Plan	0		
Max Select	None	Force Off	None		

Split Preference Phases

Phase	1	2	3	4	5	6	7	8	9	10	11	12	13	14	15	16
Description																
Splits (Split Pat 64)	15	20	31	34	15	20	20	45	0	0	0	0	0	0	0	0
Pref 1	0	0	0	0	0	0	0	0	0	0	0	0	0	0	0	0
Pref 2	0	0	0	0	0	0	0	0	0	0	0	0	0	0	0	0

Ring	1	2	3	4
Ring Split Ext	0	0	0	0
Ring Displacement	-	0	0	0
Split Sum	100s	100s	0s	0s

Misc. Data

Veh Perm 1	0	Veh Perm 2	0	Veh Perm 2 Disp	0
Split Demand Pat 1	0	Split Demand Pat 2	0	Crossing Arterial Pat	0

Split Pattern

Phase	1	2	3	4	5	6	7	8	9	10	11	12	13	14	15	16
Coord Phase				X				X								
Vehicle Recall				X				X								
Pedestrian Recall																
Recall to Max. Time																
Omit Phase									X	X	X	X	X	X	X	X
Special Funciton Outputs																

Ontario, CA

ECONOLITE CONTROL. PRODUCTS, INC.

Solutions that Move the World' Trvl

Milliken Ave. @ Fourth St. - 10.211.52.111 - ASC3 - Econolite Type - ASC/3

Coordination Split Pattern

Split Pattern Data (MM) 3-3

Split Pattern # 31

Phase	1	2	3	4	5	6	7	8	9	10	11	12	13	14	15	16
Description																
Split (seconds)	17	38	25	40	17	38	21	42	0	0	0	0	0	0	0	0
Coord Phase		X				X										
Vehicle Recall																
Pedestrian Recall																
Recall to Max. Time																
Omit Phase									X	X	X	X	X	X	X	X

Ring	1	2	3	4
Split Sum	120s	118s	0s	0s

Split Pattern # 32

Phase	1	2	3	4	5	6	7	8	9	10	11	12	13	14	15	16
Description																
Split (seconds)	22	34	26	38	21	35	20	44	0	0	0	0	0	0	0	0
Coord Phase		X				X										
Vehicle Recall																
Pedestrian Recall																
Recall to Max. Time																
Omit Phase									X	X	X	X	X	X	X	X

Ring	1	2	3	4
Split Sum	120s	120s	0s	0s

Split Pattern # 33

Phase	1	2	3	4	5	6	7	8	9	10	11	12	13	14	15	16
Description																
Split (seconds)	21	40	20	39	19	38	20	39	0	0	0	0	0	0	0	0
Coord Phase		X				X										
Vehicle Recall																
Pedestrian Recall																
Recall to Max. Time																
Omit Phase									X	X	X	X	X	X	X	X

Ring	1	2	3	4
Split Sum	120s	116s	0s	0s

Split Pattern # 42

Phase	1	2	3	4	5	6	7	8	9	10	11	12	13	14	15	16
Description																
Split (seconds)	22	46	20	32	22	46	20	32	0	0	0	0	0	0	0	0
Coord Phase		X				X										
Vehicle Recall																
Pedestrian Recall																
Recall to Max. Time	X	X	X	X	X	X	X	X								
Omit Phase									X	X	X	X	X	X	X	X

Ring	1	2	3	4
Split Sum	120s	120s	0s	0s

Split Pattern # 61

Phase	1	2	3	4	5	6	7	8	9	10	11	12	13	14	15	16
Description																
Split (seconds)	25	20	15	41	18	26	17	39	0	0	0	0	0	0	0	0
Coord Phase				X				X								
Vehicle Recall				X				X								
Pedestrian Recall																
Recall to Max. Time																
Omit Phase									X	X	X	X	X	X	X	X

Ring	1	2	3	4
Split Sum	101s	100s	0s	0s

Split Pattern # 62

Phase	1	2	3	4	5	6	7	8	9	10	11	12	13	14	15	16
Description																
Split (seconds)	15	31	21	33	15	31	15	39	0	0	0	0	0	0	0	0
Coord Phase				X				X								
Vehicle Recall				X				X								
Pedestrian Recall																
Recall to Max. Time																
Omit Phase									X	X	X	X	X	X	X	X

Ring	1	2	3	4
Split Sum	100s	100s	0s	0s

Split Pattern # 63

Phase	1	2	3	4	5	6	7	8	9	10	11	12	13	14	15	16
Description																
Split (seconds)	20	28	18	34	14	34	17	35	0	0	0	0	0	0	0	0
Coord Phase				X				X								
Vehicle Recall				X				X								
Pedestrian Recall																
Recall to Max. Time																
Omit Phase									X	X	X	X	X	X	X	X

Ring	1	2	3	4
Split Sum	100s	100s	0s	0s

Split Pattern # 64

Phase	1	2	3	4	5	6	7	8	9	10	11	12	13	14	15	16
Description																
Split (seconds)	15	20	31	34	15	20	20	45	0	0	0	0	0	0	0	0
Coord Phase				X				X								
Vehicle Recall				X				X								
Pedestrian Recall																
Recall to Max. Time																
Omit Phase									X	X	X	X	X	X	X	X

Ring	1	2	3	4
Split Sum	100s	100s	0s	0s

Ontario, CA

ECONOLITE CONTROL. PRODUCTS, INC.

Solutions that Move the World' Trvl

Milliken Ave. @ Fourth St. - 10.211.52.111 - ASC3 - Econolite Type - ASC/3

Preempt Plan

Preempt Plan (MM) 4-1

Preempt Plan 3

Phase	1	2	3	4	5	6	7	8	9	10	11	12	13	14	15	16
Overlap	**A**	**B**	**C**	**D**	**E**	**F**	**G**	**H**	**I**	**J**	**K**	**L**	**M**	**N**	**O**	**P**
Trk Clr Veh	.	.	.	.	.	.	.	.	.	.	.	.	.	.	.	.
Trk Clr Overlap	.	.	.	.	.	.	.	.	.	.	.	.	.	.	.	.
Enable Trailing																
Dwell Veh	.	X	.	.	X	.	.	.	.	.	.	.	.	.	.	.
Dwell Ped																
Dwell Overlap	.	.	.	.	.	.	.	.	.	.	.	.	.	.	.	.
Cycling Veh	.	.	.	.	.	.	.	.	.	.	.	.	.	.	.	.
Cycling Ped																
Cycling Overlap	.	.	.	.	.	.	.	.	.	.	.	.	.	.	.	.
Exit Phases		X			X											
Exit Calls																
Special Function																

Enable	Yes	Preempt Override	Yes	Interlock Enable	No
Det Lock	Yes	Delay	0	Inhibit	0
Override Flash	No	Duration	0	CLR > GRN	No
Term Ovlp Asap	No	PC Through Yel	No	Terminate Phase	No
Ped Dark	No	Track Clear Rsrv	No	Dwell Flash	Off
Linked Pmt	0	FL Exit Color	Grn	Exit Options	Off
Exit Timing Plan	0	Reservice	0	Fault Type	Hard

Ring	1	2	3	4
Free During Pmt	No	No	No	No

Timing	Walk	Ped Clr	Min Grn	Yellow	Red
Entrance	0	255	5	4.0	1.0
	Min Grn	**Ext Grn**	**Max Grn**	**Yellow**	**Red**
Track Clear	0	0	0	4.0	1.0
	Min Dwell	**Pmt Ext**	**Max Time**	**Yellow**	**Red**
Dwell / Cycle-Exit	0	0.0	0	4.0	1.0

Preemption Active Out	On	Preempt Act Dwell	No
Other - Priority Preempt	Off	Non-Priority Pmt	Off
Inhibit Extension Time	0.0	Ped Priority Return	Off
Veh Priority Return	Off	Queue Delay	Off
Conditional Delay	Off		

Phase	1	2	3	4	5	6	7	8	9	10	11	12	13	14	15	16
Veh Pri Return %	0	0	0	0	0	0	0	0	0	0	0	0	0	0	0	0

Preempt Plan 4

Phase	1	2	3	4	5	6	7	8	9	10	11	12	13	14	15	16
Overlap	A	B	C	D	E	F	G	H	I	J	K	L	M	N	O	P
Trk Clr Veh	.	.	.	.	.	.	.	.	.	.	.	.	.	.	.	.
Trk Clr Overlap	.	.	.	.	.	.	.	.	.	.	.	.	.	.	.	.
Enable Trailing																
Dwell Veh	X	.	.	.	.	X	.	.	.	.	.	.	.	.	.	.
Dwell Ped																
Dwell Overlap	.	.	.	.	.	.	.	.	.	.	.	.	.	.	.	.
Cycling Veh	.	.	.	.	.	.	.	.	.	.	.	.	.	.	.	.
Cycling Ped																
Cycling Overlap	.	.	.	.	.	.	.	.	.	.	.	.	.	.	.	.
Exit Phases	X					X										
Exit Calls																
Special Function																

Enable	Yes	Preempt Override	Yes	Interlock Enable	No
Det Lock	Yes	Delay	0	Inhibit	0
Override Flash	No	Duration	0	CLR > GRN	No
Term Ovlp Asap	No	PC Through Yel	No	Terminate Phase	No
Ped Dark	No	Track Clear Rsrv	No	Dwell Flash	Off
Linked Pmt	0	FL Exit Color	Grn	Exit Options	Off
Exit Timing Plan	0	Reservice	0	Fault Type	Hard

Ring	1	2	3	4
Free During Pmt	No	No	No	No

Timing	Walk	Ped Clr	Min Grn	Yellow	Red
Entrance	0	255	5	4.0	1.0
	Min Grn	**Ext Grn**	**Max Grn**	**Yellow**	**Red**
Track Clear	0	0	0	4.0	1.0
	Min Dwell	**Pmt Ext**	**Max Time**	**Yellow**	**Red**
Dwell / Cycle-Exit	0	0.0	0	4.0	1.0

Preemption Active Out	On	Preempt Act Dwell	No
Other - Priority Preempt	Off	Non-Priority Pmt	Off
Inhibit Extension Time	0.0	Ped Priority Return	Off
Veh Priority Return	Off	Queue Delay	Off
Conditional Delay	Off		

Phase	1	2	3	4	5	6	7	8	9	10	11	12	13	14	15	16
Veh Pri Return %	0	0	0	0	0	0	0	0	0	0	0	0	0	0	0	0

Preempt Plan 5

Phase	1	2	3	4	5	6	7	8	9	10	11	12	13	14	15	16
Overlap	A	B	C	D	E	F	G	H	I	J	K	L	M	N	O	P
Trk Clr Veh	.	.	.	.	.	.	.	.	.	.	.	.	.	.	.	.
Trk Clr Overlap	.	.	.	.	.	.	.	.	.	.	.	.	.	.	.	.
Enable Trailing																
Dwell Veh	.	.	.	X	.	.	X	.	.	.	.	.	.	.	.	.
Dwell Ped																
Dwell Overlap	.	.	.	.	.	.	.	.	.	.	.	.	.	.	.	.
Cycling Veh	.	.	.	.	.	.	.	.	.	.	.	.	.	.	.	.
Cycling Ped																
Cycling Overlap	.	.	.	.	.	.	.	.	.	.	.	.	.	.	.	.
Exit Phases				X			X									
Exit Calls																
Special Function																

Enable	Yes	Preempt Override	Yes	Interlock Enable	No
Det Lock	Yes	Delay	0	Inhibit	0
Override Flash	No	Duration	0	CLR > GRN	No
Term Ovlp Asap	No	PC Through Yel	No	Terminate Phase	No
Ped Dark	No	Track Clear Rsrv	No	Dwell Flash	Off
Linked Pmt	0	FL Exit Color	Grn	Exit Options	Off
Exit Timing Plan	0	Reservice	0	Fault Type	Hard

Ring	1	2	3	4
Free During Pmt	No	No	No	No

Timing	Walk	Ped Clr	Min Grn	Yellow	Red
Entrance	0	255	5	4.0	1.0
	Min Grn	**Ext Grn**	**Max Grn**	**Yellow**	**Red**
Track Clear	0	0	0	4.0	1.0
	Min Dwell	**Pmt Ext**	**Max Time**	**Yellow**	**Red**
Dwell / Cycle-Exit	0	0.0	0	4.0	1.0

Preemption Active Out	On	Preempt Act Dwell	No
Other - Priority Preempt	Off	Non-Priority Pmt	Off
Inhibit Extension Time	0.0	Ped Priority Return	Off
Veh Priority Return	Off	Queue Delay	Off
Conditional Delay	Off		

Phase	1	2	3	4	5	6	7	8	9	10	11	12	13	14	15	16
Veh Pri Return %	0	0	0	0	0	0	0	0	0	0	0	0	0	0	0	0

Preempt Plan 6

Phase	1	2	3	4	5	6	7	8	9	10	11	12	13	14	15	16
Overlap	A	B	C	D	E	F	G	H	I	J	K	L	M	N	O	P
Trk Clr Veh	.	.	.	.	.	.	.	.	.	.	.	.	.	.	.	.
Trk Clr Overlap	.	.	.	.	.	.	.	.	.	.	.	.	.	.	.	.
Enable Trailing																
Dwell Veh	.	.	X	.	.	.	.	X	.	.	.	.	.	.	.	.
Dwell Ped																
Dwell Overlap	.	.	.	.	.	.	.	.	.	.	.	.	.	.	.	.
Cycling Veh	.	.	.	.	.	.	.	.	.	.	.	.	.	.	.	.
Cycling Ped																
Cycling Overlap	.	.	.	.	.	.	.	.	.	.	.	.	.	.	.	.
Exit Phases			X					X								
Exit Calls																
Special Function																

Enable	Yes	Preempt Override	Yes	Interlock Enable	No
Det Lock	Yes	Delay	0	Inhibit	0
Override Flash	No	Duration	0	CLR > GRN	No
Term Ovlp Asap	No	PC Through Yel	No	Terminate Phase	No
Ped Dark	No	Track Clear Rsrv	No	Dwell Flash	Off
Linked Pmt	0	FL Exit Color	Grn	Exit Options	Off
Exit Timing Plan	0	Reservice	0	Fault Type	Hard

Ring	1	2	3	4
Free During Pmt	No	No	No	No

Timing	Walk	Ped Clr	Min Grn	Yellow	Red
Entrance	0	255	5	4.0	1.0
	Min Grn	**Ext Grn**	**Max Grn**	**Yellow**	**Red**
Track Clear	0	0	0	4.0	1.0
	Min Dwell	**Pmt Ext**	**Max Time**	**Yellow**	**Red**
Dwell / Cycle-Exit	0	0.0	0	4.0	1.0

Preemption Active Out	On	Preempt Act Dwell	No
Other - Priority Preempt	Off	Non-Priority Pmt	Off
Inhibit Extension Time	0.0	Ped Priority Return	Off
Veh Priority Return	Off	Queue Delay	Off
Conditional Delay	Off		

Phase	1	2	3	4	5	6	7	8	9	10	11	12	13	14	15	16
Veh Pri Return %	0	0	0	0	0	0	0	0	0	0	0	0	0	0	0	0

Ontario, CA

ECONOLITE CONTROL. PRODUCTS, INC.

Solutions that Move the World' Trvl

Milliken Ave. @ Fourth St. - 10.211.52.111 - ASC3 - Econolite Type - ASC/3

Preempt **Preempt Filtering**
Enable Preempt Filtering & TSP/SCP
(MM) 4-2

Input	Solid	Pulsing
1	...BYPASSED...	...BYPASSED...
2	...BYPASSED...	...BYPASSED...
3	PREEMPTION 3	PREEMPTION 7
4	PREEMPTION 4	PREEMPTION 8
5	PREEMPTION 5	PREEMPTION 9
6	PREEMPTION 6	PREEMPTION 10
7	...BYPASSED...	...BYPASSED...
8	...BYPASSED...	...BYPASSED...
9	...BYPASSED...	...BYPASSED...
10	...BYPASSED...	...BYPASSED...

Ontario, CA

ECONOLITE CONTROL. PRODUCTS, INC.

Solutions that Move the World' Trvl

Milliken Ave. @ Fourth St. - 10.211.52.111 - ASC3 - Econolite Type - ASC/3

Preempt TSP/SCP Plan and Split

TSP / SCP Plan (MM) 4-3

TSP/SCP Plan	Enable Option	Signal Type	Det Lock	Delay Time	Max Presence	PMT Enables Reservice	No Delay in TSP	Action SF Inhibit	Reservice Cycles	Bus Heading
1	No	Solid	No	0	0	No	False	0	0	NB
2	No	Solid	No	0	0	No	False	0	0	SB
3	No	Solid	No	0	0	No	False	0	0	EB
4	No	Solid	No	0	0	No	False	0	0	WB
5	No	Solid	No	0	0	No	False	0	0	.
6	No	Solid	No	0	0	No	False	0	0	.

Mode: TSP
Free Default Pattern: 120
Headway Allowance: 0

TSP/SCP Plan	1	2	3	4	5	6	7	8	9	10	11	12	13	14	15	16
1	.	.	.	.	.	.	.	.	.	.	.	.	.	.	.	.
2	.	.	.	.	.	.	.	.	.	.	.	.	.	.	.	.
3	.	.	.	.	.	.	.	.	.	.	.	.	.	.	.	.
4	.	.	.	.	.	.	.	.	.	.	.	.	.	.	.	.
5	.	.	.	.	.	.	.	.	.	.	.	.	.	.	.	.
6	.	.	.	.	.	.	.	.	.	.	.	.	.	.	.	.

TSP / SCP Split Pattern (MM) 4-4

TSP/SCP Split Pattern	Max Type	Phase															
		1	2	3	4	5	6	7	8	9	10	11	12	13	14	15	16
4	Max Reduction	255	255	255	255	255	255	255	255	255	255	255	255	255	255	255	255

Ontario, CA

ECONOLITE CONTROL. PRODUCTS, INC.

Solutions that Move the World' Trvl

Milliken Ave. @ Fourth St. - 10.211.52.111 - ASC3 - Econolite Type - ASC/3

Time Base Clock/Calendar
Clock/Calendar Data (MM) 5-1

Manual Action Plan:	0
SYNC Reference Time:	00:00
SYNC Reference:	Reference Time
Day Light Savings:	No
Time Reset Input Set Time:	0:00:00
Standard Time From GMT:	0

Ontario, CA

IB ECONOUTE CONTROL. PRODUCTS. INC.

Solutions that Move the World Trvl

Milliken Ave. @ Fourth St. - 10.211.52.111 - ASC3 - Econolite Type - ASC/3

Time Base Action Plan
Action Plan (MM) 5-2

Action Plan - 1

Pattern	Free	Override Sys	Yes
Timing Plan	0	Sequence	1
Veh Detector Plan	0	Det Log	None
Flash	No	Red Rest	No
Veh Det Diag Plan	0	Ped Det Diag Plan	0
Dimming Enable	No	Pmt Veh Priority Ret	No
Pmt Ped Priority Ret	No	Pmt Queue Delay	No
Pmt Cond Delay	No		

Phase	1	2	3	4	5	6	7	8	9	10	11	12	13	14	15	16
Ped Recall																
Walk 2																
Veh Ext 2																
Veh Recall																
Max Recall																
Max 2																
Max 3																
CS Inhibit																
Omit																
Spec Func (1-8)																
Aux Func (1-3)																

	1	2	3	4	5	6	7	8	9	10	11	12	13	14	15
LP 1-15	.	.	.	.	.	.	.	.	.	.	.	.	.	.	.
LP 16-30	.	.	.	.	.	.	.	.	.	.	.	.	.	.	.
LP 31-45	.	.	.	.	.	.	.	.	.	.	.	.	.	.	.
LP 46-60	.	.	.	.	.	.	.	.	.	.	.	.	.	.	.
LP 61-75	.	.	.	.	.	.	.	.	.	.	.	.	.	.	.
LP 76-90	.	.	.	.	.	.	.	.	.	.	.	.	.	.	.
LP 91-100	.	.	.	.	.	.	.	.	.	.					

Action Plan - 31

Pattern	31	Override Sys	Yes
Timing Plan	0	Sequence	12
Veh Detector Plan	0	Det Log	None
Flash	No	Red Rest	No
Veh Det Diag Plan	0	Ped Det Diag Plan	0
Dimming Enable	No	Pmt Veh Priority Ret	No
Pmt Ped Priority Ret	No	Pmt Queue Delay	No
Pmt Cond Delay	No		

Phase	1	2	3	4	5	6	7	8	9	10	11	12	13	14	15	16
Ped Recall																
Walk 2																
Veh Ext 2																
Veh Recall																
Max Recall																
Max 2																
Max 3																
CS Inhibit																
Omit																
Spec Func (1-8)																
Aux Func (1-3)																

	1	2	3	4	5	6	7	8	9	10	11	12	13	14	15
LP 1-15	.	.	.	.	.	.	.	.	.	.	.	.	.	.	.
LP 16-30	.	.	.	.	.	.	.	.	.	.	.	.	.	.	.
LP 31-45	.	.	.	.	.	.	.	.	.	.	.	.	.	.	.
LP 46-60	.	.	.	.	.	.	.	.	.	.	.	.	.	.	.
LP 61-75	.	.	.	.	.	.	.	.	.	.	.	.	.	.	.
LP 76-90	.	.	.	.	.	.	.	.	.	.	.	.	.	.	.
LP 91-100	.	.	.	.	.	.	.	.	.	.					

Action Plan - 32

Pattern	32	Override Sys	Yes
Timing Plan	0	Sequence	1
Veh Detector Plan	0	Det Log	None
Flash	No	Red Rest	No
Veh Det Diag Plan	0	Ped Det Diag Plan	0
Dimming Enable	No	Pmt Veh Priority Ret	No
Pmt Ped Priority Ret	No	Pmt Queue Delay	No
Pmt Cond Delay	No		

Phase	1	2	3	4	5	6	7	8	9	10	11	12	13	14	15	16
Ped Recall																
Walk 2																
Veh Ext 2																
Veh Recall																
Max Recall																
Max 2																
Max 3																
CS Inhibit																
Omit																
Spec Func (1-8)																
Aux Func (1-3)																

	1	2	3	4	5	6	7	8	9	10	11	12	13	14	15
LP 1-15	.	.	.	.	.	.	.	.	.	.	.	.	.	.	.
LP 16-30	.	.	.	.	.	.	.	.	.	.	.	.	.	.	.
LP 31-45	.	.	.	.	.	.	.	.	.	.	.	.	.	.	.
LP 46-60	.	.	.	.	.	.	.	.	.	.	.	.	.	.	.
LP 61-75	.	.	.	.	.	.	.	.	.	.	.	.	.	.	.
LP 76-90	.	.	.	.	.	.	.	.	.	.	.	.	.	.	.
LP 91-100	.	.	.	.	.	.	.	.	.	.					

Action Plan - 33

Pattern	33	Override Sys	Yes
Timing Plan	0	Sequence	1
Veh Detector Plan	0	Det Log	None
Flash	No	Red Rest	No
Veh Det Diag Plan	0	Ped Det Diag Plan	0
Dimming Enable	No	Pmt Veh Priority Ret	No
Pmt Ped Priority Ret	No	Pmt Queue Delay	No
Pmt Cond Delay	No		

Phase	1	2	3	4	5	6	7	8	9	10	11	12	13	14	15	16
Ped Recall																
Walk 2																
Veh Ext 2																
Veh Recall																
Max Recall																
Max 2																
Max 3																
CS Inhibit																
Omit																

Spec Func (1-8)								

Aux Func (1-3)			

	1	2	3	4	5	6	7	8	9	10	11	12	13	14	15
LP 1-15	.	.	.	.	.	.	.	.	.	.	.	.	.	.	.
LP 16-30	.	.	.	.	.	.	.	.	.	.	.	.	.	.	.
LP 31-45	.	.	.	.	.	.	.	.	.	.	.	.	.	.	.
LP 46-60	.	.	.	.	.	.	.	.	.	.	.	.	.	.	.
LP 61-75	.	.	.	.	.	.	.	.	.	.	.	.	.	.	.
LP 76-90	.	.	.	.	.	.	.	.	.	.	.	.	.	.	.
LP 91-100	.	.	.	.	.	.	.	.	.	.					

Action Plan - 61

Pattern	61	Override Sys	No
Timing Plan	0	Sequence	11
Veh Detector Plan	0	Det Log	None
Flash	No	Red Rest	No
Veh Det Diag Plan	0	Ped Det Diag Plan	0
Dimming Enable	No	Pmt Veh Priority Ret	No
Pmt Ped Priority Ret	No	Pmt Queue Delay	No
Pmt Cond Delay	No		

Phase	1	2	3	4	5	6	7	8	9	10	11	12	13	14	15	16
Ped Recall																
Walk 2																
Veh Ext 2																
Veh Recall																
Max Recall																
Max 2																
Max 3																
CS Inhibit																
Omit																

Spec Func (1-8)								

Aux Func (1-3)			

	1	2	3	4	5	6	7	8	9	10	11	12	13	14	15
LP 1-15	.	.	.	.	.	.	.	.	.	.	.	.	.	.	.
LP 16-30	.	.	.	.	.	.	.	.	.	.	.	.	.	.	.
LP 31-45	.	.	.	.	.	.	.	.	.	.	.	.	.	.	.
LP 46-60	.	.	.	.	.	.	.	.	.	.	.	.	.	.	.
LP 61-75	.	.	.	.	.	.	.	.	.	.	.	.	.	.	.
LP 76-90	.	.	.	.	.	.	.	.	.	.	.	.	.	.	.
LP 91-100	.	.	.	.	.	.	.	.	.	.					

Action Plan - 62

Pattern	62	Override Sys	No
Timing Plan	0	Sequence	11
Veh Detector Plan	0	Det Log	None
Flash	No	Red Rest	No
Veh Det Diag Plan	0	Ped Det Diag Plan	0
Dimming Enable	No	Pmt Veh Priority Ret	No
Pmt Ped Priority Ret	No	Pmt Queue Delay	No
Pmt Cond Delay	No		

Phase	1	2	3	4	5	6	7	8	9	10	11	12	13	14	15	16
Ped Recall																
Walk 2																
Veh Ext 2																
Veh Recall																
Max Recall																
Max 2																
Max 3																
CS Inhibit																
Omit																
Spec Func (1-8)																
Aux Func (1-3)																

	1	2	3	4	5	6	7	8	9	10	11	12	13	14	15
LP 1-15	.	.	.	.	.	.	.	.	.	.	.	.	.	.	.
LP 16-30	.	.	.	.	.	.	.	.	.	.	.	.	.	.	.
LP 31-45	.	.	.	.	.	.	.	.	.	.	.	.	.	.	.
LP 46-60	.	.	.	.	.	.	.	.	.	.	.	.	.	.	.
LP 61-75	.	.	.	.	.	.	.	.	.	.	.	.	.	.	.
LP 76-90	.	.	.	.	.	.	.	.	.	.	.	.	.	.	.
LP 91-100	.	.	.	.	.	.	.	.	.	.					

Action Plan - 63

Pattern	63	Override Sys	No
Timing Plan	0	Sequence	11
Veh Detector Plan	0	Det Log	None
Flash	No	Red Rest	No
Veh Det Diag Plan	0	Ped Det Diag Plan	0
Dimming Enable	No	Pmt Veh Priority Ret	No
Pmt Ped Priority Ret	No	Pmt Queue Delay	No
Pmt Cond Delay	No		

Phase	1	2	3	4	5	6	7	8	9	10	11	12	13	14	15	16
Ped Recall																
Walk 2																
Veh Ext 2																
Veh Recall																
Max Recall																
Max 2																
Max 3																
CS Inhibit																
Omit																
Spec Func (1-8)																
Aux Func (1-3)																

	1	2	3	4	5	6	7	8	9	10	11	12	13	14	15
LP 1-15	.	.	.	.	.	.	.	.	.	.	.	.	.	.	.
LP 16-30	.	.	.	.	.	.	.	.	.	.	.	.	.	.	.
LP 31-45	.	.	.	.	.	.	.	.	.	.	.	.	.	.	.
LP 46-60	.	.	.	.	.	.	.	.	.	.	.	.	.	.	.
LP 61-75	.	.	.	.	.	.	.	.	.	.	.	.	.	.	.
LP 76-90	.	.	.	.	.	.	.	.	.	.	.	.	.	.	.
LP 91-100	.	.	.	.	.	.	.	.	.	.					

Action Plan - 64

Pattern	64	Override Sys	No
Timing Plan	0	Sequence	11
Veh Detector Plan	0	Det Log	None
Flash	No	Red Rest	No
Veh Det Diag Plan	0	Ped Det Diag Plan	0
Dimming Enable	No	Pmt Veh Priority Ret	No
Pmt Ped Priority Ret	No	Pmt Queue Delay	No
Pmt Cond Delay	No		

Phase	1	2	3	4	5	6	7	8	9	10	11	12	13	14	15	16
Ped Recall																
Walk 2																
Veh Ext 2																
Veh Recall																
Max Recall																
Max 2																
Max 3																
CS Inhibit																
Omit																

Spec Func (1-8)								
Aux Func (1-3)								

	1	2	3	4	5	6	7	8	9	10	11	12	13	14	15
LP 1-15	.	.	.	.	.	.	.	.	.	.	.	.	.	.	.
LP 16-30	.	.	.	.	.	.	.	.	.	.	.	.	.	.	.
LP 31-45	.	.	.	.	.	.	.	.	.	.	.	.	.	.	.
LP 46-60	.	.	.	.	.	.	.	.	.	.	.	.	.	.	.
LP 61-75	.	.	.	.	.	.	.	.	.	.	.	.	.	.	.
LP 76-90	.	.	.	.	.	.	.	.	.	.	.	.	.	.	.
LP 91-100	.	.	.	.	.	.	.	.	.	.					

Ontario, CA

ECONOLITE CONTROL. PRODUCTS, INC.

Solutions that Move the World' Trvl

Milliken Ave. @ Fourth St. - 10.211.52.111 - ASC3 - Econolite Type - ASC/3

Time Base Day Plan/Schedule
Day Plan (MM) 5-3

Day Plan #2

Event	Action Plan	Start Time
1	1	00:00
2	42	10:00
3	1	20:00

Schedule (MM) 5-4

Schedule Number - 1

Day Plan No.: 1

Month	JAN	FEB	MAR	APR	MAY	JUN	JUL	AUG	SEP	OCT	NOV	DEC
	X	X	X	X	X	X	X	X	X	X	X	X

Day (DOW)	SUN	MON	TUE	WED	THU	FRI	SAT
		X	X	X	X	X	

Day (DOM)	1	2	3	4	5	6	7	8	9	10	11
	X	X	X	X	X	X	X	X	X	X	X
	12	13	14	15	16	17	18	19	20	21	22
	X	X	X	X	X	X	X	X	X	X	X
	23	24	25	26	27	28	29	30	31		
	X	X	X	X	X	X	X	X	X		

Schedule Number - 2

Day Plan No.: 2

Month	JAN	FEB	MAR	APR	MAY	JUN	JUL	AUG	SEP	OCT	NOV	DEC
	X	X	X	X	X	X	X	X	X	X	X	X

Day (DOW)	SUN	MON	TUE	WED	THU	FRI	SAT
	X						X

Day (DOM)	1	2	3	4	5	6	7	8	9	10	11
	X	X	X	X	X	X	X	X	X	X	X
	12	13	14	15	16	17	18	19	20	21	22
	X	X	X	X	X	X	X	X	X	X	X
	23	24	25	26	27	28	29	30	31		
	X	X	X	X	X	X	X	X	X		

Ontario, CA

ECONOLITE CONTROL. PRODUCTS, INC.

Solutions that Move the World' Trvl

Milliken Ave. @ Fourth St. - 10.211.52.111 - ASC3 - Econolite Type - ASC/3

Time Base Exceptions
Exception Day Program (MM) 5-5

Excep Day	Float/Fixed	Mon/Mon	DOW/DOM	WOM/Year	Day Plan

Ontario, CA

ECONOLITE CONTROL. PRODUCTS, INC.

Solutions that Move the World' Trvl

Milliken Ave. @ Fourth St. - 10.211.52.111 - ASC3 - Econolite Type - ASC/3

Detectors

Detectors - Pg 1

Veh Det Phase Assignment (MM) 6-1

Vehicle Detector Plan Number - 1

Veh Detector	Called Phase	Type
1	1	N
2	6	N
3	5	N
4	2	N
5	3	N
6	8	N
7	7	N
8	4	N
9	8	N
10	4	N
11	6	N
12	2	N
17	7	N
18	7	N
19	4	N
20	3	N
21	4	N

Vehicle Detector Plan Number - 2

Veh Detector	Called Phase	Type

Vehicle Detector Plan Number - 3

Veh Detector	Called Phase	Type

Vehicle Detector Plan Number - 4

Veh Detector	Called Phase	Type

Vehicle Detector Setup (MM) 6-2

Veh Detector	Type	TS2 Detector	Description
1	N-NTCIP	Yes	
2	N-NTCIP	Yes	
3	N-NTCIP	Yes	
4	N-NTCIP	Yes	
5	N-NTCIP	Yes	
6	N-NTCIP	Yes	
7	N-NTCIP	Yes	
8	N-NTCIP	Yes	
9	N-NTCIP	Yes	
10	N-NTCIP	Yes	
11	N-NTCIP	Yes	
12	N-NTCIP	Yes	
13	N-NTCIP	Yes	
14	N-NTCIP	Yes	
15	N-NTCIP	Yes	
16	N-NTCIP	Yes	
17	N-NTCIP	Yes	
18	N-NTCIP	Yes	
19	N-NTCIP	Yes	
20	N-NTCIP	Yes	
21	N-NTCIP	Yes	
22	N-NTCIP	Yes	

23	N-NTCIP	Yes	
24	N-NTCIP	Yes	
25	N-NTCIP	Yes	
26	N-NTCIP	Yes	
27	N-NTCIP	Yes	
28	N-NTCIP	Yes	
29	N-NTCIP	Yes	
30	N-NTCIP	Yes	
31	N-NTCIP	Yes	
32	N-NTCIP	Yes	
33	N-NTCIP	Yes	
34	N-NTCIP	Yes	
35	N-NTCIP	Yes	
36	N-NTCIP	Yes	
37	N-NTCIP	Yes	
38	N-NTCIP	Yes	
39	N-NTCIP	Yes	
40	N-NTCIP	Yes	
41	N-NTCIP	Yes	
42	N-NTCIP	Yes	
43	N-NTCIP	Yes	
44	N-NTCIP	Yes	
45	N-NTCIP	Yes	
46	N-NTCIP	Yes	
47	N-NTCIP	Yes	
48	N-NTCIP	Yes	
49	N-NTCIP	Yes	
50	N-NTCIP	Yes	
51	N-NTCIP	Yes	
52	N-NTCIP	Yes	
53	N-NTCIP	Yes	
54	N-NTCIP	Yes	
55	N-NTCIP	Yes	
56	N-NTCIP	Yes	
57	N-NTCIP	Yes	
58	N-NTCIP	Yes	
59	N-NTCIP	Yes	
60	N-NTCIP	Yes	
61	N-NTCIP	Yes	
62	N-NTCIP	Yes	
63	N-NTCIP	Yes	
64	N-NTCIP	Yes	

Vehicle Detector Plan Number - 1

Veh Detector	Phase	ECPI Log	Call Option	Delay Time	Ext Option	Extend Time / Passage Time	Queue Lim. / Discon. Time	Use Added Initial	Cross Switch Ph	Lock In	NTCIP Vol.	NTCIP Occ.	Pmt Queue Delay
1	1	No	Yes	2.0	Passage	0.0	0	No	0	None	No	No	No
2	6	No	Yes	0.0	Passage	0.0	0	No	0	None	No	No	No
3	5	No	Yes	2.0	Passage	0.0	0	No	0	None	No	No	No
4	2	No	Yes	2.0	Passage	0.0	0	No	0	None	No	No	No
5	3	No	Yes	0.0	Passage	0.0	0	No	0	None	No	No	No
6	8	No	Yes	0.0	Passage	0.0	0	No	0	None	No	No	No
7	7	No	Yes	0.0	Passage	0.0	0	No	0	None	No	No	No
8	8	No	Yes	0.0	Passage	0.0	0	No	0	None	No	No	No
9	8	No	No	0.0	Passage	0.0	0	No	0	None	No	No	No
10	4	No	Yes	2.0	Passage	0.0	0	No	0	None	No	No	No
11	6	No	No	0.0	Passage	0.0	0	No	0	None	No	No	No
12	2	No	Yes	2.0	Passage	0.0	0	No	0	None	No	No	No
13	0	No	No	2.0	Passage	0.0	0	No	0	None	No	No	No
14	0	No	Yes	0.0	Passage	0.0	0	No	0	None	No	No	No
15	0	No	No	0.0	Passage	0.0	0	No	0	None	No	No	No
16	0	No	Yes	2.0	Passage	0.0	0	No	0	None	No	No	No
17	7	No	Yes	0.0	None	0.0	0	No	0	None	No	No	No
18	7	No	Yes	0.0	None	0.0	0	No	0	None	No	No	No
19	4	No	Yes	0.0	None	0.0	0	No	0	None	No	No	No
20	3	No	Yes	0.0	Passage	0.0	0	No	0	None	No	No	No

21	4	No	Yes	0.0	None	0.0	0	No	0	None	No	No	No

Vehicle Detector Plan Number - 2

Veh Detector	Phase	ECPI Log	Call Option	Delay Time	Ext Option	Extend Time / Passage Time	Queue Lim. / Discon. Time	Use Added Initial	Cross Switch Ph	Lock In	NTCIP Vol.	NTCIP Occ.	Pmt Queue Delay
1	1	No	Yes	0.0	Passage	0.0	0	No	0	None	No	No	No
2	2	No	Yes	0.0	Passage	0.0	0	No	0	None	No	No	No
3	3	No	Yes	0.0	Passage	0.0	0	No	0	None	No	No	No
4	4	No	Yes	0.0	Passage	0.0	0	No	0	None	No	No	No
5	5	No	Yes	0.0	Passage	0.0	0	No	0	None	No	No	No
6	6	No	Yes	0.0	Passage	0.0	0	No	0	None	No	No	No
7	7	No	Yes	0.0	Passage	0.0	0	No	0	None	No	No	No
8	8	No	Yes	0.0	Passage	0.0	0	No	0	None	No	No	No
9	9	No	Yes	0.0	Passage	0.0	0	No	0	None	No	No	No
10	10	No	Yes	0.0	Passage	0.0	0	No	0	None	No	No	No
11	11	No	Yes	0.0	Passage	0.0	0	No	0	None	No	No	No
12	12	No	Yes	0.0	Passage	0.0	0	No	0	None	No	No	No
13	13	No	Yes	0.0	Passage	0.0	0	No	0	None	No	No	No
14	14	No	Yes	0.0	Passage	0.0	0	No	0	None	No	No	No
15	15	No	Yes	0.0	Passage	0.0	0	No	0	None	No	No	No
16	16	No	Yes	0.0	Passage	0.0	0	No	0	None	No	No	No
20	0	No	Yes	0.0	Passage	0.0	0	No	0	None	No	No	No

Vehicle Detector Plan Number - 3

Veh Detector	Phase	ECPI Log	Call Option	Delay Time	Ext Option	Extend Time / Passage Time	Queue Lim. / Discon. Time	Use Added Initial	Cross Switch Ph	Lock In	NTCIP Vol.	NTCIP Occ.	Pmt Queue Delay
1	1	No	Yes	0.0	Passage	0.0	0	No	0	None	No	No	No
2	2	No	Yes	0.0	Passage	0.0	0	No	0	None	No	No	No
3	3	No	Yes	0.0	Passage	0.0	0	No	0	None	No	No	No
4	4	No	Yes	0.0	Passage	0.0	0	No	0	None	No	No	No
5	5	No	Yes	0.0	Passage	0.0	0	No	0	None	No	No	No
6	6	No	Yes	0.0	Passage	0.0	0	No	0	None	No	No	No
7	7	No	Yes	0.0	Passage	0.0	0	No	0	None	No	No	No
8	8	No	Yes	0.0	Passage	0.0	0	No	0	None	No	No	No
9	9	No	Yes	0.0	Passage	0.0	0	No	0	None	No	No	No
10	10	No	Yes	0.0	Passage	0.0	0	No	0	None	No	No	No
11	11	No	Yes	0.0	Passage	0.0	0	No	0	None	No	No	No
12	12	No	Yes	0.0	Passage	0.0	0	No	0	None	No	No	No
13	13	No	Yes	0.0	Passage	0.0	0	No	0	None	No	No	No
14	14	No	Yes	0.0	Passage	0.0	0	No	0	None	No	No	No
15	15	No	Yes	0.0	Passage	0.0	0	No	0	None	No	No	No
16	16	No	Yes	0.0	Passage	0.0	0	No	0	None	No	No	No
20	0	No	Yes	0.0	Passage	0.0	0	No	0	None	No	No	No

Vehicle Detector Plan Number - 4

Veh Detector	Phase	ECPI Log	Call Option	Delay Time	Ext Option	Extend Time / Passage Time	Queue Lim. / Discon. Time	Use Added Initial	Cross Switch Ph	Lock In	NTCIP Vol.	NTCIP Occ.	Pmt Queue Delay
1	1	No	Yes	0.0	Passage	0.0	0	No	0	None	No	No	No
2	2	No	Yes	0.0	Passage	0.0	0	No	0	None	No	No	No
3	3	No	Yes	0.0	Passage	0.0	0	No	0	None	No	No	No
4	4	No	Yes	0.0	Passage	0.0	0	No	0	None	No	No	No
5	5	No	Yes	0.0	Passage	0.0	0	No	0	None	No	No	No
6	6	No	Yes	0.0	Passage	0.0	0	No	0	None	No	No	No
7	7	No	Yes	0.0	Passage	0.0	0	No	0	None	No	No	No
8	8	No	Yes	0.0	Passage	0.0	0	No	0	None	No	No	No
9	9	No	Yes	0.0	Passage	0.0	0	No	0	None	No	No	No
10	10	No	Yes	0.0	Passage	0.0	0	No	0	None	No	No	No
11	11	No	Yes	0.0	Passage	0.0	0	No	0	None	No	No	No
12	12	No	Yes	0.0	Passage	0.0	0	No	0	None	No	No	No
13	13	No	Yes	0.0	Passage	0.0	0	No	0	None	No	No	No
14	14	No	Yes	0.0	Passage	0.0	0	No	0	None	No	No	No
15	15	No	Yes	0.0	Passage	0.0	0	No	0	None	No	No	No
16	16	No	Yes	0.0	Passage	0.0	0	No	0	None	No	No	No

20	0	No	Yes	0.0	Passage	0.0	0	No	0	None	No	No	No

Ped Detector Phase Assignment (MM) 6-3

Mode: NTCIP

Called Phase	Detector
1	1
2	2
3	3
4	4
5	5
6	6
7	7
8	8
9	9
10	10
11	11
12	12
13	13
14	14
15	15
16	16

Ontario, CA

ECONOLITE CONTROL. PRODUCTS, INC.

Solutions that Move the World' Trvl

Milliken Ave. @ Fourth St. - 10.211.52.111 - ASC3 - Econolite Type - ASC/3

Detectors

Detectors - Pg 2

Log - Speed Detector Setup (MM) 6-4

NTCIP Log Period: 60 ECPI Log Period: 0 Length Unit: Inches

Speed Detector	Local Detector	One/Two Detector	Vehicle Length	Trap length	Enable Log
1	0	1	0	0	No
2	0	1	0	0	No
3	0	1	0	0	No
4	0	1	0	0	No
5	0	1	0	0	No
6	0	1	0	0	No
7	0	1	0	0	No
8	0	1	0	0	No
9	0	1	0	0	No
10	0	1	0	0	No
11	0	1	0	0	No
12	0	1	0	0	No
13	0	1	0	0	No
14	0	1	0	0	No
15	0	1	0	0	No
16	0	1	0	0	No

Vehicle Detector Diagnostics (MM) 6-5

Veh Diagnostic Plan Number - 1

Det	Counts	Act	Pres	Multiplier	Failed Time	Failed Call Delay

Veh Diagnostic Plan Number - 2

Det	Counts	Act	Pres	Multiplier	Failed Time	Failed Call Delay

Veh Diagnostic Plan Number - 3

Det	Counts	Act	Pres	Multiplier	Failed Time	Failed Call Delay

Veh Diagnostic Plan Number - 4

Det	Counts	Act	Pres	Multiplier	Failed Time	Failed Call Delay

Pedestrian Detector Diagnostics (MM) 6-6

Ped Diagnostic Plan Number - 1

Det	Counts	Act	Pres	Multiplier

Ped Diagnostic Plan Number - 2

Det	Counts	Act	Pres	Multiplier

Ped Diagnostic Plan Number - 3

Det	Counts	Act	Pres	Multiplier

Ped Diagnostic Plan Number - 4

Det	Counts	Act	Pres	Multiplier

Ontario, CA

ECONOLITE CONTROL. PRODUCTS, INC.

Solutions that Move the World' Trvl

Milliken Ave. @ Concours - 10.211.51.161 - ASC3 - Econolite Type - ASC/3

Configuration Controller Sequence

Phase Ring Sequence.....(Note: Sequences identical to the prior one are not printed)

	01	02	03	04	05	06	07	08	09	10	11	12	13	14	15	16
	B		B		B		B									
Sequence 1																
Ring 1	1	2	3	4	9	10	.	.	.	.	.	.	.	.	.	.
Ring 2	5	6	7	8	11	12	.	.	.	.	.	.	.	.	.	.
Sequence 10																
Ring 1	2	1	3	4	9	10	.	.	.	.	.	.	.	.	.	.
Ring 2	5	6	7	8	11	12	.	.	.	.	.	.	.	.	.	.
Sequence 11																
Ring 1	1	2	4	3	9	10	.	.	.	.	.	.	.	.	.	.
Ring 2	5	6	7	8	11	12	.	.	.	.	.	.	.	.	.	.
Sequence 12																
Ring 1	1	2	3	4	9	10	.	.	.	.	.	.	.	.	.	.
Ring 2	6	5	7	8	11	12	.	.	.	.	.	.	.	.	.	.
Sequence 13																
Ring 1	1	2	3	4	9	10	.	.	.	.	.	.	.	.	.	.
Ring 2	5	6	8	7	11	12	.	.	.	.	.	.	.	.	.	.
Sequence 14																
Ring 1	1	2	3	4	10	9	.	.	.	.	.	.	.	.	.	.
Ring 2	5	6	7	8	11	12	.	.	.	.	.	.	.	.	.	.
Sequence 15																
Ring 1	1	2	3	4	9	10	.	.	.	.	.	.	.	.	.	.
Ring 2	5	6	7	8	12	11	.	.	.	.	.	.	.	.	.	.
Sequence 16																
Ring 1	1	2	3	4	9	10	.	.	.	.	.	.	.	.	.	.
Ring 2	5	6	7	8	11	12	.	.	.	.	.	.	.	.	.	.

Phase	1	2	3	4	5	6	7	8	9	10	11	12	13	14	15	16

Hardware Alternate Sequence Enable: No

Ontario, CA

ECONOLITE CONTROL. PRODUCTS, INC.

Solutions that Move the World' Trvl

Milliken Ave. @ Concours - 10.211.51.161 - ASC3 - Econolite Type - ASC/3

Configuration Port 1 (SDLC)

Port 1 SDLC (MM) 1-4-1

BIU	1	2	3	4	5	6	7	8
Term & Facility	X	X						
Detector Rack	X							

Enable TS2/MMU Type Cabinet: Yes
Enable MMU Extended Status: Yes
Enable SDLC Stop Time: Yes
Enable 3 Critical RFE's Lockup: Yes

MMU Program (MM) 1-4-2

Channel Can Serve With Channel	
Channel 1	**Channel 2**
1	5
1	6
1	11
2	5
2	6
2	9
2	11
3	7
3	8
3	12
4	7
4	8
4	10
4	12
5	9
6	9
6	11
7	10
8	10
8	12
9	11
10	12

Color Check Enable (MM) 1-4-3

Enable Color Check: Yes

MMU/LS	1	2	3	4	5	6	7	8	9	10	11	12	13	14	15	16
Green																
Yellow																
Red																

Secondary Stations/Tests (MM) 1-4-4

ID	1	2	3	4	5	6	7	8	MMU
Term & Facility									

ID	1	2	3	4	5	6	7	8	Diag
Detector Rack									

Enable SDLC Diagnostic Test: No

Ontario, CA

ECONOLITE CONTROL. PRODUCTS, INC.

Solutions that Move the World' Trvl

Milliken Ave. @ Concours - 10.211.51.161 - ASC3 - Econolite Type - ASC/3

Configuration Communications 1 (SDLC)

Ethernet Port Configuration (MM) 1-5-1

Controller IP:	10.211.51.161
Subnet Mask:	255.255.255.0
Default Gateway IP:	10.211.51.1
Server IP:	10.10.5.28

NTCIP (MM) 1-5-5

NTCIP Backup Time (Sec):	0
NTCIP UDP Port:	501
Ethernet Priority:	1
Port 2 Priority (Port C50S for 2070):	4
Port 3A Priority (Port C21S for 2070):	2
Port 3B Priority (Port C22S for 2070):	3

Port Configuration (MM) 1-5-2 to 1-5-4

Port	2 (C50S)	3A (C21S)	3B (C22S)
Protocol	TERMINAL	NTCIP	ECPIP
Enable	Yes	No	Yes
Data Rate (BPS)	38.4K	19.2K	1200
Data, Parity, Stop	8 N 1	8 N 1	8 O 1
Address	0	0	1
Telemetry Response Delay	0.0	0.0	0.9
Duplex - Half or Full	Half	Full	Full
Flow Control	Yes	Yes	Yes
Group Address	0	0	0
Single Flag Enable	Yes	Yes	Yes
RTS to CTS Delay	n/a	n/a	3.0
RTS Turn Off Delay	n/a	n/a	2.0
Dropout Time	10	10	300
Early RTS	n/a	n/a	No
Telemetry Mode	n/a	n/a	FSK
ATCS Railroad	0	n/a	n/a
ATCS Railroad Line	0	n/a	n/a
ATCS Group	0	n/a	n/a
Wayside Device	0	n/a	n/a
ATC Device	0	n/a	n/a
Wayside Subnode	0	n/a	n/a
ATC Subnode	0	n/a	n/a

ECPIP (MM) 1-5-6

Controller Address:	1
Expanded System Detector Address:	0

System Detector Assignment

System Detector	Local Detector

Ontario, CA

ECONOLITE CONTROL. PRODUCTS, INC.

Solutions that Move the World' Trvl

Milliken Ave. @ Concours - 10.211.51.161 - ASC3 - Econolite Type - ASC/3

Configuration Logging / Display

Event Logging (MM) 1-6-1

Critical RFE's (MMU/TF)	Yes	3 Critical Errors Within 24 Hours	Yes
MMU Flash Faults	Yes	Local Flash Fault	Yes
Non-Critical RFE's (Det/Test)	Yes	Detector Errors	Yes
Coordination Errors	Yes	Controller Download	Yes
Preemption Events	Yes	TSP Events	Yes
Power On/Off	Yes	Low Battery	Yes
Access	Yes	Data Change	Yes
Online / Offline	Yes		

Alarm Event	1	2	3	4	5	6	7	8	9	10	11	12	13	14	15	16
Enable Logging	X	X	X	X	X	X	X	X	X	X	X	X	X	X	X	X

Display Options (MM) 1-7-2

Key Click Enable:	Yes
Backlight Enable:	Yes
LED Mode:	Auto
Display Mode:	Basic
Screen Format:	Basic
Trans Mode Pop-Up Disable:	No

Sign On (MM) 8-5

Sign On Message Line 1: Solving Tomorrow's Traffic
Sign On Message Line 2: Problems ... Today

Software Modules (MM) 8-7

Application Version: 02.59.00
OS (Boot) Version: 01.14.03

Ontario, CA

ECONOLITE CONTROL. PRODUCTS, INC.

Solutions that Move the World' Trvl

Milliken Ave. @ Concours - 10.211.51.161 - ASC3 - Econolite Type - ASC/3

Logic Processor Page 1

Logic Statement Control (MM) 1-8-1

Logic #	Statement Control

Ontario, CA

ECONOLITE CONTROL. PRODUCTS, INC.

Solutions that Move the World' Trvl

Milliken Ave. @ Concours - 10.211.51.161 - ASC3 - Econolite Type - ASC/3

Logic Processor Page 2

Logic Statements (MM) 1-8-2

Ontario, CA

IB ECONOUTE CONTROL. PRODUCTS. INC.

Solutions that Move the World Trvl

Milliken Ave. @ Concours - 10.211.51.161 - ASC3 - Econolite Type - ASC/3

Controller Timing Plan (MM) 2-1

Plan 1

Phase	1	2	3	4	5	6	7	8	9	10	11	12	13	14	15	16
Direction																
Min Green	7	7	9	9	7	7	9	9	5	5	5	5	5	5	5	5
Bk Min Green	0	0	0	0	0	0	0	0	0	0	0	0	0	0	0	0
CS Min Green	0	0	10	0	0	0	10	0	0	0	0	0	0	0	0	0
Delay Green	0	0	0	0	0	0	0	0	0	0	0	0	0	0	0	0
Walk	0	5	0	5	0	5	0	5	0	10	0	10	0	10	0	10
Walk2	0	0	0	0	0	0	0	0	0	0	0	0	0	0	0	0
Walk Max	0	0	0	0	0	0	0	0	0	0	0	0	0	0	0	0
Ped Clear	0	24	0	35	0	24	0	35	0	16	0	16	0	16	0	16
Ped Clear 2	0	0	0	0	0	0	0	0	0	0	0	0	0	0	0	0
Ped Clear Max	0	0	0	0	0	0	0	0	0	0	0	0	0	0	0	0
Ped CO	0	0	0	0	0	0	0	0	0	0	0	0	0	0	0	0
Vehicle Ext	3.0	3.5	3.0	3.5	3.0	3.5	3.5	3.5	5.0	5.0	5.0	5.0	5.0	5.0	5.0	5.0
Vehicle Ext 2	0.0	0.0	0.0	0.0	0.0	0.0	0.0	0.0	0.0	0.0	0.0	0.0	0.0	0.0	0.0	0.0
Max1	20	35	20	20	20	35	20	20	35	35	35	35	35	35	35	35
Max2	0	0	0	0	0	0	0	0	40	40	40	40	40	40	40	40
Max3	0	0	0	0	0	0	0	0	0	0	0	0	0	0	0	0
DYM Max	25	55	25	65	55	55	65	25	0	0	0	0	0	0	0	0
Dym Step	10.0	15.0	5.0	15.0	15.0	15.0	15.0	10.0	0.0	0.0	0.0	0.0	0.0	0.0	0.0	0.0
Yellow	5.0	5.0	4.5	4.5	5.0	5.0	4.5	4.5	3.0	3.0	3.0	3.0	3.0	3.0	3.0	3.0
Red Clear	2.0	2.0	2.0	2.0	2.0	2.0	2.0	2.0	1.0	1.0	1.0	1.0	1.0	1.0	1.0	1.0
Red Max	0.0	0.0	0.0	0.0	0.0	0.0	0.0	0.0	0.0	0.0	0.0	0.0	0.0	0.0	0.0	0.0
Red Revert	5.0	5.0	2.0	2.0	5.0	5.0	2.0	2.0	2.0	2.0	2.0	2.0	2.0	2.0	2.0	2.0
Act B4	0	0	0	0	0	0	0	0	0	0	0	0	0	0	0	0
Sec/Act	0.0	0.0	0.0	0.0	0.0	0.0	0.0	0.0	0.0	0.0	0.0	0.0	0.0	0.0	0.0	0.0
Max Int	0	0	0	0	0	0	0	0	0	0	0	0	0	0	0	0
Time B4	0	0	0	0	0	0	0	0	0	0	0	0	0	0	0	0
Cars Wt	0	0	0	0	0	0	0	0	0	0	0	0	0	0	0	0
STPTDuc	0.0	0.0	0.0	0.0	0.0	0.0	0.0	0.0	0.0	0.0	0.0	0.0	0.0	0.0	0.0	0.0
TTReduc	0	0	0	0	0	0	0	0	0	0	0	0	0	0	0	0
Min Gap	0.0	0.0	0.0	0.0	0.0	0.0	0.0	0.0	0.0	0.0	0.0	0.0	0.0	0.0	0.0	0.0

Plan 2

Phase	1	2	3	4	5	6	7	8	9	10	11	12	13	14	15	16
Direction																
Min Green	5	5	5	5	5	5	5	5	5	5	5	5	5	5	5	5
Bk Min Green	0	0	0	0	0	0	0	0	0	0	0	0	0	0	0	0
CS Min Green	0	0	0	0	0	0	0	0	0	0	0	0	0	0	0	0
Delay Green	0	0	0	0	0	0	0	0	0	0	0	0	0	0	0	0
Walk	0	10	0	10	0	10	0	10	0	10	0	10	0	10	0	10
Walk2	0	0	0	0	0	0	0	0	0	0	0	0	0	0	0	0
Walk Max	0	0	0	0	0	0	0	0	0	0	0	0	0	0	0	0
Ped Clear	0	16	0	16	0	16	0	16	0	16	0	16	0	16	0	16
Ped Clear 2	0	0	0	0	0	0	0	0	0	0	0	0	0	0	0	0
Ped Clear Max	0	0	0	0	0	0	0	0	0	0	0	0	0	0	0	0
Ped CO	0	0	0	0	0	0	0	0	0	0	0	0	0	0	0	0
Vehicle Ext	5.0	5.0	5.0	5.0	5.0	5.0	5.0	5.0	5.0	5.0	5.0	5.0	5.0	5.0	5.0	5.0
Vehicle Ext 2	0.0	0.0	0.0	0.0	0.0	0.0	0.0	0.0	0.0	0.0	0.0	0.0	0.0	0.0	0.0	0.0
Max1	35	35	35	35	35	35	35	35	35	35	35	35	35	35	35	35
Max2	40	40	40	40	40	40	40	40	40	40	40	40	40	40	40	40
Max3	0	0	0	0	0	0	0	0	0	0	0	0	0	0	0	0
DYM Max	0	0	0	0	0	0	0	0	0	0	0	0	0	0	0	0
Dym Step	0.0	0.0	0.0	0.0	0.0	0.0	0.0	0.0	0.0	0.0	0.0	0.0	0.0	0.0	0.0	0.0
Yellow	3.0	3.0	3.0	3.0	3.0	3.0	3.0	3.0	3.0	3.0	3.0	3.0	3.0	3.0	3.0	3.0
Red Clear	1.0	1.0	1.0	1.0	1.0	1.0	1.0	1.0	1.0	1.0	1.0	1.0	1.0	1.0	1.0	1.0
Red Max	0.0	0.0	0.0	0.0	0.0	0.0	0.0	0.0	0.0	0.0	0.0	0.0	0.0	0.0	0.0	0.0

Red Revert	2.0	2.0	2.0	2.0	2.0	2.0	2.0	2.0	2.0	2.0	2.0	2.0	2.0	2.0	2.0	2.0
Act B4	0	0	0	0	0	0	0	0	0	0	0	0	0	0	0	0
Sec/Act	0.0	0.0	0.0	0.0	0.0	0.0	0.0	0.0	0.0	0.0	0.0	0.0	0.0	0.0	0.0	0.0
Max Int	0	0	0	0	0	0	0	0	0	0	0	0	0	0	0	0
Time B4	0	0	0	0	0	0	0	0	0	0	0	0	0	0	0	0
Cars Wt	0	0	0	0	0	0	0	0	0	0	0	0	0	0	0	0
STPTDuc	0.0	0.0	0.0	0.0	0.0	0.0	0.0	0.0	0.0	0.0	0.0	0.0	0.0	0.0	0.0	0.0
TTReduc	0	0	0	0	0	0	0	0	0	0	0	0	0	0	0	0
Min Gap	0.0	0.0	0.0	0.0	0.0	0.0	0.0	0.0	0.0	0.0	0.0	0.0	0.0	0.0	0.0	0.0

Plan 3

Phase	1	2	3	4	5	6	7	8	9	10	11	12	13	14	15	16
Direction																
Min Green	5	5	5	5	5	5	5	5	5	5	5	5	5	5	5	5
Bk Min Green	0	0	0	0	0	0	0	0	0	0	0	0	0	0	0	0
CS Min Green	0	0	0	0	0	0	0	0	0	0	0	0	0	0	0	0
Delay Green	0	0	0	0	0	0	0	0	0	0	0	0	0	0	0	0
Walk	0	10	0	10	0	10	0	10	0	10	0	10	0	10	0	10
Walk2	0	0	0	0	0	0	0	0	0	0	0	0	0	0	0	0
Walk Max	0	0	0	0	0	0	0	0	0	0	0	0	0	0	0	0
Ped Clear	0	16	0	16	0	16	0	16	0	16	0	16	0	16	0	16
Ped Clear 2	0	0	0	0	0	0	0	0	0	0	0	0	0	0	0	0
Ped Clear Max	0	0	0	0	0	0	0	0	0	0	0	0	0	0	0	0
Ped CO	0	0	0	0	0	0	0	0	0	0	0	0	0	0	0	0
Vehicle Ext	5.0	5.0	5.0	5.0	5.0	5.0	5.0	5.0	5.0	5.0	5.0	5.0	5.0	5.0	5.0	5.0
Vehicle Ext 2	0.0	0.0	0.0	0.0	0.0	0.0	0.0	0.0	0.0	0.0	0.0	0.0	0.0	0.0	0.0	0.0
Max1	35	35	35	35	35	35	35	35	35	35	35	35	35	35	35	35
Max2	40	40	40	40	40	40	40	40	40	40	40	40	40	40	40	40
Max3	0	0	0	0	0	0	0	0	0	0	0	0	0	0	0	0
DYM Max	0	0	0	0	0	0	0	0	0	0	0	0	0	0	0	0
Dym Step	0.0	0.0	0.0	0.0	0.0	0.0	0.0	0.0	0.0	0.0	0.0	0.0	0.0	0.0	0.0	0.0
Yellow	3.0	3.0	3.0	3.0	3.0	3.0	3.0	3.0	3.0	3.0	3.0	3.0	3.0	3.0	3.0	3.0
Red Clear	1.0	1.0	1.0	1.0	1.0	1.0	1.0	1.0	1.0	1.0	1.0	1.0	1.0	1.0	1.0	1.0
Red Max	0.0	0.0	0.0	0.0	0.0	0.0	0.0	0.0	0.0	0.0	0.0	0.0	0.0	0.0	0.0	0.0
Red Revert	2.0	2.0	2.0	2.0	2.0	2.0	2.0	2.0	2.0	2.0	2.0	2.0	2.0	2.0	2.0	2.0
Act B4	0	0	0	0	0	0	0	0	0	0	0	0	0	0	0	0
Sec/Act	0.0	0.0	0.0	0.0	0.0	0.0	0.0	0.0	0.0	0.0	0.0	0.0	0.0	0.0	0.0	0.0
Max Int	0	0	0	0	0	0	0	0	0	0	0	0	0	0	0	0
Time B4	0	0	0	0	0	0	0	0	0	0	0	0	0	0	0	0
Cars Wt	0	0	0	0	0	0	0	0	0	0	0	0	0	0	0	0
STPTDuc	0.0	0.0	0.0	0.0	0.0	0.0	0.0	0.0	0.0	0.0	0.0	0.0	0.0	0.0	0.0	0.0
TTReduc	0	0	0	0	0	0	0	0	0	0	0	0	0	0	0	0
Min Gap	0.0	0.0	0.0	0.0	0.0	0.0	0.0	0.0	0.0	0.0	0.0	0.0	0.0	0.0	0.0	0.0

Plan 4

Phase	1	2	3	4	5	6	7	8	9	10	11	12	13	14	15	16
Direction																
Min Green	5	5	5	5	5	5	5	5	5	5	5	5	5	5	5	5
Bk Min Green	0	0	0	0	0	0	0	0	0	0	0	0	0	0	0	0
CS Min Green	0	0	0	0	0	0	0	0	0	0	0	0	0	0	0	0
Delay Green	0	0	0	0	0	0	0	0	0	0	0	0	0	0	0	0
Walk	0	10	0	10	0	10	0	10	0	10	0	10	0	10	0	10
Walk2	0	0	0	0	0	0	0	0	0	0	0	0	0	0	0	0
Walk Max	0	0	0	0	0	0	0	0	0	0	0	0	0	0	0	0
Ped Clear	0	16	0	16	0	16	0	16	0	16	0	16	0	16	0	16
Ped Clear 2	0	0	0	0	0	0	0	0	0	0	0	0	0	0	0	0
Ped Clear Max	0	0	0	0	0	0	0	0	0	0	0	0	0	0	0	0
Ped CO	0	0	0	0	0	0	0	0	0	0	0	0	0	0	0	0
Vehicle Ext	5.0	5.0	5.0	5.0	5.0	5.0	5.0	5.0	5.0	5.0	5.0	5.0	5.0	5.0	5.0	5.0
Vehicle Ext 2	0.0	0.0	0.0	0.0	0.0	0.0	0.0	0.0	0.0	0.0	0.0	0.0	0.0	0.0	0.0	0.0
Max1	35	35	35	35	35	35	35	35	35	35	35	35	35	35	35	35
Max2	40	40	40	40	40	40	40	40	40	40	40	40	40	40	40	40
Max3	0	0	0	0	0	0	0	0	0	0	0	0	0	0	0	0
DYM Max	0	0	0	0	0	0	0	0	0	0	0	0	0	0	0	0
Dym Step	0.0	0.0	0.0	0.0	0.0	0.0	0.0	0.0	0.0	0.0	0.0	0.0	0.0	0.0	0.0	0.0
Yellow	3.0	3.0	3.0	3.0	3.0	3.0	3.0	3.0	3.0	3.0	3.0	3.0	3.0	3.0	3.0	3.0
Red Clear	1.0	1.0	1.0	1.0	1.0	1.0	1.0	1.0	1.0	1.0	1.0	1.0	1.0	1.0	1.0	1.0
Red Max	0.0	0.0	0.0	0.0	0.0	0.0	0.0	0.0	0.0	0.0	0.0	0.0	0.0	0.0	0.0	0.0
Red Revert	2.0	2.0	2.0	2.0	2.0	2.0	2.0	2.0	2.0	2.0	2.0	2.0	2.0	2.0	2.0	2.0
Act B4	0	0	0	0	0	0	0	0	0	0	0	0	0	0	0	0
Sec/Act	0.0	0.0	0.0	0.0	0.0	0.0	0.0	0.0	0.0	0.0	0.0	0.0	0.0	0.0	0.0	0.0
Max Int	0	0	0	0	0	0	0	0	0	0	0	0	0	0	0	0
Time B4	0	0	0	0	0	0	0	0	0	0	0	0	0	0	0	0
Cars Wt	0	0	0	0	0	0	0	0	0	0	0	0	0	0	0	0
STPTDuc	0.0	0.0	0.0	0.0	0.0	0.0	0.0	0.0	0.0	0.0	0.0	0.0	0.0	0.0	0.0	0.0
TTReduc	0	0	0	0	0	0	0	0	0	0	0	0	0	0	0	0
Min Gap	0.0	0.0	0.0	0.0	0.0	0.0	0.0	0.0	0.0	0.0	0.0	0.0	0.0	0.0	0.0	0.0

Ontario, CA

ECONOLITE CONTROL. PRODUCTS, INC.

Solutions that Move the World' Trvl

Milliken Ave. @ Concours - 10.211.51.161 - ASC3 - Econolite Type - ASC/3

Controller Overlaps

Vehicle Overlaps (MM) 2-2

Overlap	Type	Lag Green	Yellow	Red	Adv. Green

Phases

Overlap	Phase	Included	Protect	Ped Protect	Not Overlap	Modifier	Lag X Phases	Lag 2 Phases	Flash Green

PPLT FYA

Overlap	Protected Phase (Left Turn)	Permissive Phase (Opposing Thru)	Flashing Arrow Output	Flashing Arrow Output CH	Delay Start of FYA	Delay Start of Clearance	Action Plan SF Bit Disable	Ped Protected Enable

Guaranteed Minimum Time Data (MM) 2-4

Phase	Min Green	Walk	Ped Clear	Yellow	Red Clear	Overlap Green
A01	5	0	7	3.0	0.0	5
B02	5	0	7	3.0	0.0	5
C03	5	0	7	3.0	0.0	5
D04	5	0	7	3.0	0.0	5
E05	5	0	7	3.0	0.0	5
F06	5	0	7	3.0	0.0	5
G07	5	0	7	3.0	0.0	5
H08	5	0	7	3.0	0.0	5
I09	5	0	7	3.0	0.0	5
J10	5	0	7	3.0	0.0	5
K11	5	0	7	3.0	0.0	5
L12	5	0	7	3.0	0.0	5
M13	5	0	7	3.0	0.0	5
N14	5	0	7	3.0	0.0	5
O15	5	0	7	3.0	0.0	5
P16	5	0	7	3.0	0.0	5

Ontario, CA

ECONOLITE CONTROL. PRODUCTS, INC.

Solutions that Move the World' Trvl

Milliken Ave. @ Concours - 10.211.51.161 - ASC3 - Econolite Type - ASC/3

Controller Pedestrian Overlaps
Vehicle / Pedestrian Overlaps (MM) 2-3

Included	Pedestrian Overlaps

Ontario, CA

ECONOLITE CONTROL. PRODUCTS, INC.

Solutions that Move the World' Trvl

Milliken Ave. @ Concours - 10.211.51.161 - ASC3 - Econolite Type - ASC/3

Controller Start / Flash Data (MM) 2-5

Start Up

Phase	Phase Setting
1	.
2	G
3	.
4	.
5	.
6	G
7	.
8	.
9	.
10	.
11	.
12	.
13	.
14	.
15	.
16	.

Overlap
A
B
C
D

Flash Thru Mon: No
Flash Time: 15
All Red: 6
Power Start Seq: 1
MUTCD Enabled: No
Y->G: n/a

Automatic Flash

Entry
2
6

Exit
2
6

Overlap Exit
A
B
C
D

Flash Thru Mon: No
Exit Flash: W
Minimum Flash: 5
Mimimum Recall: No
Cycle Through Phase: No

Ontario, CA

ECONOLITE CONTROL. PRODUCTS, INC.

Solutions that Move the World' Trvl

Milliken Ave. @ Concours - 10.211.51.161 - ASC3 - Econolite Type - ASC/3

Controller Options

Controller Options (MM) 2-6-1

Phase	1	2	3	4	5	6	7	8	9	10	11	12	13	14	15	16
Flashing Grn Ph	.	.	.	.	.	.	.	.	.	.	.	.	.	.	.	.
Guar Passage																
Non-Act I																
Non-Act II																
Dual Entry		X		X		X		X								
Cond Service			X				X									
Cond Reservice																
Ped Re-Service																
Rest In Walk																
Flashing Walk																
Ped Clr-Yel																
Ped Clr-Red																
IGRN + Veh Ext																

Ped Clear Protect: Off Unit Red Revert: 2.0 MUTCD 3 Seconds Don't Walk: No

Pre-Timed Mode (MM) 2-7

Enable Pre-Timed Mode: No Free Input Disables Pre-Timed: No

Phase	1	2	3	4	5	6	7	8	9	10	11	12	13	14	15	16
Pre-Timed																

Phase Recall Options (MM) 2-8

Plan # 1

	1	2	3	4	5	6	7	8	9	10	11	12	13	14	15	16
Lock Detector																
Vehicle Recall		X				X										
Ped Recall																
Max Recall																
Soft Recall																
No Rest																
AI Calc																

Ontario, CA

ECONOLITE CONTROL. PRODUCTS, INC.

Solutions that Move the World' Trvl

Milliken Ave. @ Concours - 10.211.51.161 - ASC3 - Econolite Type - ASC/3

Coordination Options

Options (MM) 3-1

Manual Pattern	Auto	ECPI Coord	Yes
System Source	TBC	System Format	STD
Splits In	Seconds	Offsets In	Seconds
Transition	Smooth	Max Select	MAXINH
Dwell / Add Time	0		
Delay Coord Wk-LZ	No	Force Off	Float
Offset Reference	Lead	Use Ped Time	Yes
Ped Recall	No	Ped Reservice	No
Local Zero Override	No	FO Added Ini Green	No
Re-sync Count	0	Multisync	No

Auto Perm Minimum Green (Seconds) (MM) 3-4

Phase	1	2	3	4	5	6	7	8	9	10	11	12	13	14	15	16
Minimum Green	0	0	0	0	0	0	0	0	0	0	0	0	0	0	0	0

Split Demand (MM) 3-5

Phase	1	2	3	4	5	6	7	8	9	10	11	12	13	14	15	16
Demand 1																
Demand 2																

Demand	1	2
Detector	0	0
Call Time (Sec)	0	0
Cycle Count	0	0

Ontario, CA

ECONOLITE CONTROL. PRODUCTS, INC.

Solutions that Move the World' Trvl

Milliken Ave. @ Concours - 10.211.51.161 - ASC3 - Econolite Type - ASC/3

Coordination Pattern Data
Coordinator Pattern Data (MM) 3-2

Coordinator Pattern # 61

Split Pattern	61	TS2 (Pat-Off)	0-0	Splits In	Seconds
Cycle	100	Std (COS)	0	Offsets In	Seconds
Offset Value	68s	Dwell/Add Time	0		
Actuated Coord	Yes	Timing Plan	0		
Actuated Walk Rest	No	Sequence	11		
Phase Reservice	No	Action Plan	0		
Max Select	None	Force Off	None		

Split Preference Phases

Phase	1	2	3	4	5	6	7	8	9	10	11	12	13	14	15	16
Description																
Splits (Split Pat 61)	25	20	15	41	18	26	17	39	0	0	0	0	0	0	0	0
Pref 1	0	0	0	0	0	0	0	0	0	0	0	0	0	0	0	0
Pref 2	0	0	0	0	0	0	0	0	0	0	0	0	0	0	0	0

Ring	1	2	3	4
Ring Split Ext	0	0	0	0
Ring Displacement	-	0	0	0
Split Sum	101s	100s	0s	0s

Misc. Data

Veh Perm 1	0	Veh Perm 2	0	Veh Perm 2 Disp	0
Split Demand Pat 1	0	Split Demand Pat 2	0	Crossing Arterial Pat	0

Split Pattern

Phase	1	2	3	4	5	6	7	8	9	10	11	12	13	14	15	16
Coord Phase				X				X								
Vehicle Recall				X				X								
Pedestrian Recall																
Recall to Max. Time																
Omit Phase									X	X	X	X	X	X	X	X
Special Funciton Outputs																

Coordinator Pattern # 62

Split Pattern	62	TS2 (Pat-Off)	0-0	Splits In	Seconds
Cycle	100	Std (COS)	0	Offsets In	Seconds
Offset Value	90s	Dwell/Add Time	0		
Actuated Coord	Yes	Timing Plan	0		
Actuated Walk Rest	No	Sequence	11		
Phase Reservice	No	Action Plan	0		
Max Select	None	Force Off	None		

Split Preference Phases

Phase	1	2	3	4	5	6	7	8	9	10	11	12	13	14	15	16
Description																
Splits (Split Pat 62)	15	31	21	33	15	31	15	39	0	0	0	0	0	0	0	0
Pref 1	0	0	0	0	0	0	0	0	0	0	0	0	0	0	0	0
Pref 2	0	0	0	0	0	0	0	0	0	0	0	0	0	0	0	0

Ring	1	2	3	4
Ring Split Ext	0	0	0	0
Ring Displacement	-	0	0	0
Split Sum	100s	100s	0s	0s

Misc. Data

Veh Perm 1	0	Veh Perm 2	0	Veh Perm 2 Disp	0
Split Demand Pat 1	0	Split Demand Pat 2	0	Crossing Arterial Pat	0

Split Pattern

Phase	1	2	3	4	5	6	7	8	9	10	11	12	13	14	15	16
Coord Phase				X				X								
Vehicle Recall				X				X								
Pedestrian Recall																
Recall to Max. Time																
Omit Phase									X	X	X	X	X	X	X	X
Special Funciton Outputs																

Coordinator Pattern # 63

Split Pattern	63	TS2 (Pat-Off)	0-0	Splits In	Seconds
Cycle	100	Std (COS)	0	Offsets In	Seconds
Offset Value	59s	Dwell/Add Time	0		
Actuated Coord	Yes	Timing Plan	0		
Actuated Walk Rest	No	Sequence	11		
Phase Reservice	No	Action Plan	0		
Max Select	None	Force Off	None		

Split Preference Phases

Phase	1	2	3	4	5	6	7	8	9	10	11	12	13	14	15	16
Description																
Splits (Split Pat 63)	20	28	18	34	14	34	17	35	0	0	0	0	0	0	0	0
Pref 1	0	0	0	0	0	0	0	0	0	0	0	0	0	0	0	0
Pref 2	0	0	0	0	0	0	0	0	0	0	0	0	0	0	0	0

Ring	1	2	3	4
Ring Split Ext	0	11	0	0
Ring Displacement	-	0	0	0
Split Sum	100s	100s	0s	0s

Misc. Data

Veh Perm 1	0	Veh Perm 2	0	Veh Perm 2 Disp	0
Split Demand Pat 1	0	Split Demand Pat 2	0	Crossing Arterial Pat	0

Split Pattern

Phase	1	2	3	4	5	6	7	8	9	10	11	12	13	14	15	16
Coord Phase				X				X								
Vehicle Recall				X				X								
Pedestrian Recall																
Recall to Max. Time																
Omit Phase									X	X	X	X	X	X	X	X
Special Funciton Outputs																

Coordinator Pattern # 64

Split Pattern	64	TS2 (Pat-Off)	0-0	Splits In	Seconds
Cycle	100	Std (COS)	0	Offsets In	Seconds
Offset Value	20s	Dwell/Add Time	0		
Actuated Coord	Yes	Timing Plan	0		
Actuated Walk Rest	No	Sequence	11		
Phase Reservice	No	Action Plan	0		
Max Select	None	Force Off	None		

Split Preference Phases

Phase	1	2	3	4	5	6	7	8	9	10	11	12	13	14	15	16
Description																
Splits (Split Pat 64)	15	20	31	34	15	20	20	45	0	0	0	0	0	0	0	0
Pref 1	0	0	0	0	0	0	0	0	0	0	0	0	0	0	0	0
Pref 2	0	0	0	0	0	0	0	0	0	0	0	0	0	0	0	0

Ring	1	2	3	4
Ring Split Ext	0	0	0	0
Ring Displacement	-	0	0	0
Split Sum	100s	100s	0s	0s

Misc. Data

Veh Perm 1	0	Veh Perm 2	0	Veh Perm 2 Disp	0
Split Demand Pat 1	0	Split Demand Pat 2	0	Crossing Arterial Pat	0

Split Pattern

Phase	1	2	3	4	5	6	7	8	9	10	11	12	13	14	15	16
Coord Phase				X				X								
Vehicle Recall				X				X								
Pedestrian Recall																
Recall to Max. Time																
Omit Phase									X	X	X	X	X	X	X	X
Special Funciton Outputs																

Ontario, CA

ECONOLITE CONTROL. PRODUCTS, INC.

Solutions that Move the World' Trvl

Milliken Ave. @ Concours - 10.211.51.161 - ASC3 - Econolite Type - ASC/3

Coordination Split Pattern

Split Pattern Data (MM) 3-3

Split Pattern # 61

Phase	1	2	3	4	5	6	7	8	9	10	11	12	13	14	15	16
Description																
Split (seconds)	25	20	15	41	18	26	17	39	0	0	0	0	0	0	0	0
Coord Phase				X				X								
Vehicle Recall				X				X								
Pedestrian Recall																
Recall to Max. Time																
Omit Phase									X	X	X	X	X	X	X	X

Ring	1	2	3	4
Split Sum	101s	100s	0s	0s

Split Pattern # 62

Phase	1	2	3	4	5	6	7	8	9	10	11	12	13	14	15	16
Description																
Split (seconds)	15	31	21	33	15	31	15	39	0	0	0	0	0	0	0	0
Coord Phase				X				X								
Vehicle Recall				X				X								
Pedestrian Recall																
Recall to Max. Time																
Omit Phase									X	X	X	X	X	X	X	X

Ring	1	2	3	4
Split Sum	100s	100s	0s	0s

Split Pattern # 63

Phase	1	2	3	4	5	6	7	8	9	10	11	12	13	14	15	16
Description																
Split (seconds)	20	28	18	34	14	34	17	35	0	0	0	0	0	0	0	0
Coord Phase				X				X								
Vehicle Recall				X				X								
Pedestrian Recall																
Recall to Max. Time																
Omit Phase									X	X	X	X	X	X	X	X

Ring	1	2	3	4
Split Sum	100s	100s	0s	0s

Split Pattern # 64

Phase	1	2	3	4	5	6	7	8	9	10	11	12	13	14	15	16
Description																
Split (seconds)	15	20	31	34	15	20	20	45	0	0	0	0	0	0	0	0
Coord Phase				X				X								
Vehicle Recall				X				X								
Pedestrian Recall																
Recall to Max. Time																
Omit Phase									X	X	X	X	X	X	X	X

Ring	1	2	3	4
Split Sum	100s	100s	0s	0s

Ontario, CA

ECONOLITE CONTROL. PRODUCTS, INC.

Solutions that Move the World' Trvl

Milliken Ave. @ Concours - 10.211.51.161 - ASC3 - Econolite Type - ASC/3

Preempt Plan

Preempt Plan (MM) 4-1

Preempt Plan 3

Phase	1	2	3	4	5	6	7	8	9	10	11	12	13	14	15	16
Overlap	**A**	**B**	**C**	**D**	**E**	**F**	**G**	**H**	**I**	**J**	**K**	**L**	**M**	**N**	**O**	**P**
Trk Clr Veh	.	.	.	.	.	.	.	.	.	.	.	.	.	.	.	.
Trk Clr Overlap	.	.	.	.	.	.	.	.	.	.	.	.	.	.	.	.
Enable Trailing																
Dwell Veh	.	X	.	.	X	.	.	.	.	.	.	.	.	.	.	.
Dwell Ped																
Dwell Overlap	.	.	.	.	.	.	.	.	.	.	.	.	.	.	.	.
Cycling Veh	.	.	.	.	.	.	.	.	.	.	.	.	.	.	.	.
Cycling Ped																
Cycling Overlap	.	.	.	.	.	.	.	.	.	.	.	.	.	.	.	.
Exit Phases		X			X											
Exit Calls																
Special Function																

Enable	Yes	Preempt Override	Yes	Interlock Enable	No
Det Lock	Yes	Delay	0	Inhibit	0
Override Flash	No	Duration	0	CLR > GRN	No
Term Ovlp Asap	No	PC Through Yel	No	Terminate Phase	No
Ped Dark	No	Track Clear Rsrv	No	Dwell Flash	Off
Linked Pmt	0	FL Exit Color	Grn	Exit Options	Off
Exit Timing Plan	0	Reservice	0	Fault Type	Hard

Ring	1	2	3	4
Free During Pmt	No	No	No	No

Timing	Walk	Ped Clr	Min Grn	Yellow	Red
Entrance	0	255	5	4.0	1.0
	Min Grn	**Ext Grn**	**Max Grn**	**Yellow**	**Red**
Track Clear	0	0	0	4.0	1.0
	Min Dwell	**Pmt Ext**	**Max Time**	**Yellow**	**Red**
Dwell / Cycle-Exit	0	0.0	0	4.0	1.0

Preemption Active Out	On	Preempt Act Dwell	No
Other - Priority Preempt	Off	Non-Priority Pmt	Off
Inhibit Extension Time	0.0	Ped Priority Return	Off
Veh Priority Return	Off	Queue Delay	Off
Conditional Delay	Off		

Phase	1	2	3	4	5	6	7	8	9	10	11	12	13	14	15	16
Veh Pri Return %	0	0	0	0	0	0	0	0	0	0	0	0	0	0	0	0

Preempt Plan 4

Phase	1	2	3	4	5	6	7	8	9	10	11	12	13	14	15	16
Overlap	A	B	C	D	E	F	G	H	I	J	K	L	M	N	O	P
Trk Clr Veh	.	.	.	.	.	.	.	.	.	.	.	.	.	.	.	.
Trk Clr Overlap	.	.	.	.	.	.	.	.	.	.	.	.	.	.	.	.
Enable Trailing																
Dwell Veh	X	.	.	.	.	X	.	.	.	.	.	.	.	.	.	.
Dwell Ped																
Dwell Overlap	.	.	.	.	.	.	.	.	.	.	.	.	.	.	.	.
Cycling Veh	.	.	.	.	.	.	.	.	.	.	.	.	.	.	.	.
Cycling Ped																
Cycling Overlap	.	.	.	.	.	.	.	.	.	.	.	.	.	.	.	.
Exit Phases	X					X										
Exit Calls																
Special Function																

Enable	Yes	Preempt Override	Yes	Interlock Enable	No
Det Lock	Yes	Delay	0	Inhibit	0
Override Flash	No	Duration	0	CLR > GRN	No
Term Ovlp Asap	No	PC Through Yel	No	Terminate Phase	No
Ped Dark	No	Track Clear Rsrv	No	Dwell Flash	Off
Linked Pmt	0	FL Exit Color	Grn	Exit Options	Off
Exit Timing Plan	0	Reservice	0	Fault Type	Hard

Ring	1	2	3	4
Free During Pmt	No	No	No	No

Timing	Walk	Ped Clr	Min Grn	Yellow	Red
Entrance	0	255	5	4.0	1.0
	Min Grn	**Ext Grn**	**Max Grn**	**Yellow**	**Red**
Track Clear	0	0	0	4.0	1.0
	Min Dwell	**Pmt Ext**	**Max Time**	**Yellow**	**Red**
Dwell / Cycle-Exit	0	0.0	0	4.0	1.0

Preemption Active Out	On	Preempt Act Dwell	No
Other - Priority Preempt	Off	Non-Priority Pmt	Off
Inhibit Extension Time	0.0	Ped Priority Return	Off
Veh Priority Return	Off	Queue Delay	Off
Conditional Delay	Off		

Phase	1	2	3	4	5	6	7	8	9	10	11	12	13	14	15	16
Veh Pri Return %	0	0	0	0	0	0	0	0	0	0	0	0	0	0	0	0

Preempt Plan 5

Phase	1	2	3	4	5	6	7	8	9	10	11	12	13	14	15	16
Overlap	A	B	C	D	E	F	G	H	I	J	K	L	M	N	O	P
Trk Clr Veh	.	.	.	.	.	.	.	.	.	.	.	.	.	.	.	.
Trk Clr Overlap	.	.	.	.	.	.	.	.	.	.	.	.	.	.	.	.
Enable Trailing																
Dwell Veh	.	.	.	X	.	.	X	.	.	.	.	.	.	.	.	.
Dwell Ped																
Dwell Overlap	.	.	.	.	.	.	.	.	.	.	.	.	.	.	.	.
Cycling Veh	.	.	.	.	.	.	.	.	.	.	.	.	.	.	.	.
Cycling Ped																
Cycling Overlap	.	.	.	.	.	.	.	.	.	.	.	.	.	.	.	.
Exit Phases				X			X									
Exit Calls																
Special Function																

Enable	Yes	Preempt Override	Yes	Interlock Enable	No
Det Lock	Yes	Delay	0	Inhibit	0
Override Flash	No	Duration	0	CLR > GRN	No
Term Ovlp Asap	No	PC Through Yel	No	Terminate Phase	No
Ped Dark	No	Track Clear Rsrv	No	Dwell Flash	Off
Linked Pmt	0	FL Exit Color	Grn	Exit Options	Off
Exit Timing Plan	0	Reservice	0	Fault Type	Hard

Ring	1	2	3	4
Free During Pmt	No	No	No	No

Timing	Walk	Ped Clr	Min Grn	Yellow	Red
Entrance	0	255	5	4.0	1.0
	Min Grn	**Ext Grn**	**Max Grn**	**Yellow**	**Red**
Track Clear	0	0	0	4.0	1.0
	Min Dwell	**Pmt Ext**	**Max Time**	**Yellow**	**Red**
Dwell / Cycle-Exit	0	0.0	0	4.0	1.0

Preemption Active Out	On	Preempt Act Dwell	No
Other - Priority Preempt	Off	Non-Priority Pmt	Off
Inhibit Extension Time	0.0	Ped Priority Return	Off
Veh Priority Return	Off	Queue Delay	Off
Conditional Delay	Off		

Phase	1	2	3	4	5	6	7	8	9	10	11	12	13	14	15	16
Veh Pri Return %	0	0	0	0	0	0	0	0	0	0	0	0	0	0	0	0

Preempt Plan 6

Phase	1	2	3	4	5	6	7	8	9	10	11	12	13	14	15	16
Overlap	A	B	C	D	E	F	G	H	I	J	K	L	M	N	O	P
Trk Clr Veh	.	.	.	.	.	.	.	.	.	.	.	.	.	.	.	.
Trk Clr Overlap	.	.	.	.	.	.	.	.	.	.	.	.	.	.	.	.
Enable Trailing																
Dwell Veh	.	.	X	.	.	.	.	X	.	.	.	.	.	.	.	.
Dwell Ped																
Dwell Overlap	.	.	.	.	.	.	.	.	.	.	.	.	.	.	.	.
Cycling Veh	.	.	.	.	.	.	.	.	.	.	.	.	.	.	.	.
Cycling Ped																
Cycling Overlap	.	.	.	.	.	.	.	.	.	.	.	.	.	.	.	.
Exit Phases			X					X								
Exit Calls																
Special Function																

Enable	Yes	Preempt Override	Yes	Interlock Enable	No
Det Lock	Yes	Delay	0	Inhibit	0
Override Flash	No	Duration	0	CLR > GRN	No
Term Ovlp Asap	No	PC Through Yel	No	Terminate Phase	No
Ped Dark	No	Track Clear Rsrv	No	Dwell Flash	Off
Linked Pmt	0	FL Exit Color	Grn	Exit Options	Off
Exit Timing Plan	0	Reservice	0	Fault Type	Hard

Ring	1	2	3	4
Free During Pmt	No	No	No	No

Timing	Walk	Ped Clr	Min Grn	Yellow	Red
Entrance	0	255	5	4.0	1.0
	Min Grn	**Ext Grn**	**Max Grn**	**Yellow**	**Red**
Track Clear	0	0	0	4.0	1.0
	Min Dwell	**Pmt Ext**	**Max Time**	**Yellow**	**Red**
Dwell / Cycle-Exit	0	0.0	0	4.0	1.0

Preemption Active Out	On	Preempt Act Dwell	No
Other - Priority Preempt	Off	Non-Priority Pmt	Off
Inhibit Extension Time	0.0	Ped Priority Return	Off
Veh Priority Return	Off	Queue Delay	Off
Conditional Delay	Off		

Phase	1	2	3	4	5	6	7	8	9	10	11	12	13	14	15	16
Veh Pri Return %	0	0	0	0	0	0	0	0	0	0	0	0	0	0	0	0

Ontario, CA

ECONOLITE CONTROL. PRODUCTS, INC.

Solutions that Move the World' Trvl

Milliken Ave. @ Concours - 10.211.51.161 - ASC3 - Econolite Type - ASC/3

Preempt **Preempt Filtering**
Enable Preempt Filtering & TSP/SCP
(MM) 4-2

Input	Solid	Pulsing
1	...BYPASSED...	...BYPASSED...
2	...BYPASSED...	...BYPASSED...
3	PREEMPTION 3	PREEMPTION 7
4	PREEMPTION 4	PREEMPTION 8
5	PREEMPTION 5	PREEMPTION 9
6	PREEMPTION 6	PREEMPTION 10
7	...BYPASSED...	...BYPASSED...
8	...BYPASSED...	...BYPASSED...
9	...BYPASSED...	...BYPASSED...
10	...BYPASSED...	...BYPASSED...

Ontario, CA

ECONOLITE CONTROL. PRODUCTS, INC.

Solutions that Move the World' Trvl

Milliken Ave. @ Concours - 10.211.51.161 - ASC3 - Econolite Type - ASC/3

Preempt TSP/SCP Plan and Split

TSP / SCP Plan (MM) 4-3

TSP/SCP Plan	Enable Option	Signal Type	Det Lock	Delay Time	Max Presence	PMT Enables Reservice	No Delay in TSP	Action SF Inhibit	Reservice Cycles	Bus Heading
1	No	Solid	No	0	0	No	False	0	0	NB
2	No	Solid	No	0	0	No	False	0	0	SB
3	No	Solid	No	0	0	No	False	0	0	EB
4	No	Solid	No	0	0	No	False	0	0	WB
5	No	Solid	No	0	0	No	False	0	0	.
6	No	Solid	No	0	0	No	False	0	0	.

Mode: TSP
Free Default Pattern: 120
Headway Allowance: 0

TSP/SCP Plan	1	2	3	4	5	6	7	8	9	10	11	12	13	14	15	16
1	.	.	.	.	.	.	.	.	.	.	.	.	.	.	.	.
2	.	.	.	.	.	.	.	.	.	.	.	.	.	.	.	.
3	.	.	.	.	.	.	.	.	.	.	.	.	.	.	.	.
4	.	.	.	.	.	.	.	.	.	.	.	.	.	.	.	.
5	.	.	.	.	.	.	.	.	.	.	.	.	.	.	.	.
6	.	.	.	.	.	.	.	.	.	.	.	.	.	.	.	.

TSP / SCP Split Pattern (MM) 4-4

TSP/SCP Split Pattern	Max Type	Phase															
		1	2	3	4	5	6	7	8	9	10	11	12	13	14	15	16
4	Max Reduction	255	255	255	255	255	255	255	255	255	255	255	255	255	255	255	255

Ontario, CA

ECONOLITE CONTROL. PRODUCTS, INC.

Solutions that Move the World' Trvl

Milliken Ave. @ Concours - 10.211.51.161 - ASC3 - Econolite Type - ASC/3

Time Base Clock/Calendar
Clock/Calendar Data (MM) 5-1

Manual Action Plan:	0
SYNC Reference Time:	00:00
SYNC Reference:	Reference Time
Day Light Savings:	No
Time Reset Input Set Time:	3:30:00
Standard Time From GMT:	0

Ontario, CA

IB ECONOUTE CONTROL. PRODUCTS. INC.

Solutions that Move the World Trvl

Milliken Ave. @ Concours - 10.211.51.161 - ASC3 - Econolite Type - ASC/3

Time Base Action Plan
Action Plan (MM) 5-2

Action Plan - 1

Pattern	Free	Override Sys	Yes
Timing Plan	0	Sequence	1
Veh Detector Plan	0	Det Log	None
Flash	No	Red Rest	No
Veh Det Diag Plan	0	Ped Det Diag Plan	0
Dimming Enable	No	Pmt Veh Priority Ret	No
Pmt Ped Priority Ret	No	Pmt Queue Delay	No
Pmt Cond Delay	No		

Phase	1	2	3	4	5	6	7	8	9	10	11	12	13	14	15	16
Ped Recall																
Walk 2																
Veh Ext 2																
Veh Recall																
Max Recall																
Max 2																
Max 3																
CS Inhibit																
Omit																
Spec Func (1-8)																
Aux Func (1-3)																

	1	2	3	4	5	6	7	8	9	10	11	12	13	14	15
LP 1-15	.	.	.	.	.	.	.	.	.	.	.	.	.	.	.
LP 16-30	.	.	.	.	.	.	.	.	.	.	.	.	.	.	.
LP 31-45	.	.	.	.	.	.	.	.	.	.	.	.	.	.	.
LP 46-60	.	.	.	.	.	.	.	.	.	.	.	.	.	.	.
LP 61-75	.	.	.	.	.	.	.	.	.	.	.	.	.	.	.
LP 76-90	.	.	.	.	.	.	.	.	.	.	.	.	.	.	.
LP 91-100	.	.	.	.	.	.	.	.	.	.					

Action Plan - 31

Pattern	31	Override Sys	No
Timing Plan	0	Sequence	0
Veh Detector Plan	0	Det Log	None
Flash	No	Red Rest	No
Veh Det Diag Plan	0	Ped Det Diag Plan	0
Dimming Enable	No	Pmt Veh Priority Ret	No
Pmt Ped Priority Ret	No	Pmt Queue Delay	No
Pmt Cond Delay	No		

Phase	1	2	3	4	5	6	7	8	9	10	11	12	13	14	15	16
Ped Recall																
Walk 2																
Veh Ext 2																
Veh Recall																
Max Recall																
Max 2																
Max 3																
CS Inhibit																
Omit																

Spec Func (1-8)								

Aux Func (1-3)			

	1	2	3	4	5	6	7	8	9	10	11	12	13	14	15
LP 1-15	.	.	.	.	.	.	.	.	.	.	.	.	.	.	.
LP 16-30	.	.	.	.	.	.	.	.	.	.	.	.	.	.	.
LP 31-45	.	.	.	.	.	.	.	.	.	.	.	.	.	.	.
LP 46-60	.	.	.	.	.	.	.	.	.	.	.	.	.	.	.
LP 61-75	.	.	.	.	.	.	.	.	.	.	.	.	.	.	.
LP 76-90	.	.	.	.	.	.	.	.	.	.	.	.	.	.	.
LP 91-100	.	.	.	.	.	.	.	.	.	.					

Action Plan - 32

Pattern	32	Override Sys	No
Timing Plan	0	Sequence	0
Veh Detector Plan	0	Det Log	None
Flash	No	Red Rest	No
Veh Det Diag Plan	0	Ped Det Diag Plan	0
Dimming Enable	No	Pmt Veh Priority Ret	No
Pmt Ped Priority Ret	No	Pmt Queue Delay	No
Pmt Cond Delay	No		

Phase	1	2	3	4	5	6	7	8	9	10	11	12	13	14	15	16
Ped Recall																
Walk 2																
Veh Ext 2																
Veh Recall																
Max Recall																
Max 2																
Max 3																
CS Inhibit																
Omit																

Spec Func (1-8)								

Aux Func (1-3)			

	1	2	3	4	5	6	7	8	9	10	11	12	13	14	15
LP 1-15	.	.	.	.	.	.	.	.	.	.	.	.	.	.	.
LP 16-30	.	.	.	.	.	.	.	.	.	.	.	.	.	.	.
LP 31-45	.	.	.	.	.	.	.	.	.	.	.	.	.	.	.
LP 46-60	.	.	.	.	.	.	.	.	.	.	.	.	.	.	.
LP 61-75	.	.	.	.	.	.	.	.	.	.	.	.	.	.	.
LP 76-90	.	.	.	.	.	.	.	.	.	.	.	.	.	.	.
LP 91-100	.	.	.	.	.	.	.	.	.	.					

Action Plan - 33

Pattern	33	Override Sys	No
Timing Plan	0	Sequence	0
Veh Detector Plan	0	Det Log	None
Flash	No	Red Rest	No
Veh Det Diag Plan	0	Ped Det Diag Plan	0
Dimming Enable	No	Pmt Veh Priority Ret	No
Pmt Ped Priority Ret	No	Pmt Queue Delay	No
Pmt Cond Delay	No		

Phase	1	2	3	4	5	6	7	8	9	10	11	12	13	14	15	16
Ped Recall																
Walk 2																
Veh Ext 2																
Veh Recall																
Max Recall																
Max 2																
Max 3																
CS Inhibit																
Omit																

Spec Func (1-8)								

Aux Func (1-3)			

	1	2	3	4	5	6	7	8	9	10	11	12	13	14	15
LP 1-15	.	.	.	.	.	.	.	.	.	.	.	.	.	.	.
LP 16-30	.	.	.	.	.	.	.	.	.	.	.	.	.	.	.
LP 31-45	.	.	.	.	.	.	.	.	.	.	.	.	.	.	.
LP 46-60	.	.	.	.	.	.	.	.	.	.	.	.	.	.	.
LP 61-75	.	.	.	.	.	.	.	.	.	.	.	.	.	.	.
LP 76-90	.	.	.	.	.	.	.	.	.	.	.	.	.	.	.
LP 91-100	.	.	.	.	.	.	.	.	.	.					

Action Plan - 61

Pattern	61	Override Sys	No
Timing Plan	0	Sequence	11
Veh Detector Plan	0	Det Log	None
Flash	No	Red Rest	No
Veh Det Diag Plan	0	Ped Det Diag Plan	0
Dimming Enable	No	Pmt Veh Priority Ret	No
Pmt Ped Priority Ret	No	Pmt Queue Delay	No
Pmt Cond Delay	No		

Phase	1	2	3	4	5	6	7	8	9	10	11	12	13	14	15	16
Ped Recall																
Walk 2																
Veh Ext 2																
Veh Recall																
Max Recall																
Max 2																
Max 3																
CS Inhibit																
Omit																

Spec Func (1-8)								

Aux Func (1-3)			

	1	2	3	4	5	6	7	8	9	10	11	12	13	14	15
LP 1-15	.	.	.	.	.	.	.	.	.	.	.	.	.	.	.
LP 16-30	.	.	.	.	.	.	.	.	.	.	.	.	.	.	.
LP 31-45	.	.	.	.	.	.	.	.	.	.	.	.	.	.	.
LP 46-60	.	.	.	.	.	.	.	.	.	.	.	.	.	.	.
LP 61-75	.	.	.	.	.	.	.	.	.	.	.	.	.	.	.
LP 76-90	.	.	.	.	.	.	.	.	.	.	.	.	.	.	.
LP 91-100	.	.	.	.	.	.	.	.	.	.					

Action Plan - 62

Pattern	62	Override Sys	No
Timing Plan	0	Sequence	11
Veh Detector Plan	0	Det Log	None
Flash	No	Red Rest	No
Veh Det Diag Plan	0	Ped Det Diag Plan	0
Dimming Enable	No	Pmt Veh Priority Ret	No
Pmt Ped Priority Ret	No	Pmt Queue Delay	No
Pmt Cond Delay	No		

Phase	1	2	3	4	5	6	7	8	9	10	11	12	13	14	15	16
Ped Recall																
Walk 2																
Veh Ext 2																
Veh Recall																
Max Recall																
Max 2																
Max 3																
CS Inhibit																
Omit																

Spec Func (1-8)								

Aux Func (1-3)			

	1	2	3	4	5	6	7	8	9	10	11	12	13	14	15
LP 1-15	.	.	.	.	.	.	.	.	.	.	.	.	.	.	.
LP 16-30	.	.	.	.	.	.	.	.	.	.	.	.	.	.	.
LP 31-45	.	.	.	.	.	.	.	.	.	.	.	.	.	.	.
LP 46-60	.	.	.	.	.	.	.	.	.	.	.	.	.	.	.
LP 61-75	.	.	.	.	.	.	.	.	.	.	.	.	.	.	.
LP 76-90	.	.	.	.	.	.	.	.	.	.	.	.	.	.	.
LP 91-100	.	.	.	.	.	.	.	.	.	.					

Action Plan - 63

Pattern	63	Override Sys	No
Timing Plan	0	Sequence	11
Veh Detector Plan	0	Det Log	None
Flash	No	Red Rest	No
Veh Det Diag Plan	0	Ped Det Diag Plan	0
Dimming Enable	No	Pmt Veh Priority Ret	No
Pmt Ped Priority Ret	No	Pmt Queue Delay	No
Pmt Cond Delay	No		

Phase	1	2	3	4	5	6	7	8	9	10	11	12	13	14	15	16
Ped Recall																
Walk 2																
Veh Ext 2																
Veh Recall																
Max Recall																
Max 2																
Max 3																
CS Inhibit																
Omit																

Spec Func (1-8)								

Aux Func (1-3)			

	1	2	3	4	5	6	7	8	9	10	11	12	13	14	15
LP 1-15	.	.	.	.	.	.	.	.	.	.	.	.	.	.	.
LP 16-30	.	.	.	.	.	.	.	.	.	.	.	.	.	.	.
LP 31-45	.	.	.	.	.	.	.	.	.	.	.	.	.	.	.
LP 46-60	.	.	.	.	.	.	.	.	.	.	.	.	.	.	.
LP 61-75	.	.	.	.	.	.	.	.	.	.	.	.	.	.	.
LP 76-90	.	.	.	.	.	.	.	.	.	.	.	.	.	.	.
LP 91-100	.	.	.	.	.	.	.	.	.	.					

Action Plan - 64

Pattern	64	Override Sys	No
Timing Plan	0	Sequence	11
Veh Detector Plan	0	Det Log	None
Flash	No	Red Rest	No
Veh Det Diag Plan	0	Ped Det Diag Plan	0
Dimming Enable	No	Pmt Veh Priority Ret	No
Pmt Ped Priority Ret	No	Pmt Queue Delay	No
Pmt Cond Delay	No		

Phase	1	2	3	4	5	6	7	8	9	10	11	12	13	14	15	16
Ped Recall																
Walk 2																
Veh Ext 2																
Veh Recall																
Max Recall																
Max 2																
Max 3																
CS Inhibit																
Omit																
Spec Func (1-8)																
Aux Func (1-3)																

	1	2	3	4	5	6	7	8	9	10	11	12	13	14	15
LP 1-15	.	.	.	.	.	.	.	.	.	.	.	.	.	.	.
LP 16-30	.	.	.	.	.	.	.	.	.	.	.	.	.	.	.
LP 31-45	.	.	.	.	.	.	.	.	.	.	.	.	.	.	.
LP 46-60	.	.	.	.	.	.	.	.	.	.	.	.	.	.	.
LP 61-75	.	.	.	.	.	.	.	.	.	.	.	.	.	.	.
LP 76-90	.	.	.	.	.	.	.	.	.	.	.	.	.	.	.
LP 91-100	.	.	.	.	.	.	.	.	.	.					

Action Plan - 99

Pattern	Free	Override Sys	No
Timing Plan	0	Sequence	0
Veh Detector Plan	0	Det Log	None
Flash	No	Red Rest	No
Veh Det Diag Plan	0	Ped Det Diag Plan	0
Dimming Enable	No	Pmt Veh Priority Ret	No
Pmt Ped Priority Ret	No	Pmt Queue Delay	No
Pmt Cond Delay	No		

Phase	1	2	3	4	5	6	7	8	9	10	11	12	13	14	15	16
Ped Recall																
Walk 2																
Veh Ext 2																
Veh Recall																
Max Recall																
Max 2																
Max 3																
CS Inhibit																
Omit																
Spec Func (1-8)																
Aux Func (1-3)																

	1	2	3	4	5	6	7	8	9	10	11	12	13	14	15
LP 1-15	.	.	.	.	.	.	.	.	.	.	.	.	.	.	.
LP 16-30	.	.	.	.	.	.	.	.	.	.	.	.	.	.	.
LP 31-45	.	.	.	.	.	.	.	.	.	.	.	.	.	.	.
LP 46-60	.	.	.	.	.	.	.	.	.	.	.	.	.	.	.
LP 61-75	.	.	.	.	.	.	.	.	.	.	.	.	.	.	.
LP 76-90	.	.	.	.	.	.	.	.	.	.	.	.	.	.	.
LP 91-100	.	.	.	.	.	.	.	.	.	.					

Ontario, CA

ECONOLITE CONTROL. PRODUCTS, INC.

Solutions that Move the World' Trvl

Milliken Ave. @ Concours - 10.211.51.161 - ASC3 - Econolite Type - ASC/3

Time Base Day Plan/Schedule
Day Plan (MM) 5-3

Day Plan #1

Event	Action Plan	Start Time
1	99	00:00
2	31	06:00
3	32	10:00
4	33	15:00
5	99	20:00

Day Plan #2

Event	Action Plan	Start Time
1	1	00:00
2	64	10:00
3	1	20:00

Schedule (MM) 5-4

Schedule Number - 1

Day Plan No.: 1

Month	JAN	FEB	MAR	APR	MAY	JUN	JUL	AUG	SEP	OCT	NOV	DEC
	X	X	X	X	X	X	X	X	X	X	X	X

Day (DOW)	SUN	MON	TUE	WED	THU	FRI	SAT
		X	X	X	X	X	

Day (DOM)	1	2	3	4	5	6	7	8	9	10	11
	X	X	X	X	X	X	X	X	X	X	X
	12	13	14	15	16	17	18	19	20	21	22
	X	X	X	X	X	X	X	X	X	X	X
	23	24	25	26	27	28	29	30	31		
	X	X	X	X	X	X	X	X	X		

Schedule Number - 2

Day Plan No.: 2

Month	JAN	FEB	MAR	APR	MAY	JUN	JUL	AUG	SEP	OCT	NOV	DEC
	X	X	X	X	X	X	X	X	X	X	X	X

Day (DOW)	SUN	MON	TUE	WED	THU	FRI	SAT
	X						X

Day (DOM)	1	2	3	4	5	6	7	8	9	10	11
	X	X	X	X	X	X	X	X	X	X	X
	12	13	14	15	16	17	18	19	20	21	22
	X	X	X	X	X	X	X	X	X	X	X
	23	24	25	26	27	28	29	30	31		
	X	X	X	X	X	X	X	X	X		

Ontario, CA

ECONOLITE CONTROL. PRODUCTS, INC.

Solutions that Move the World' Trvl

Milliken Ave. @ Concours - 10.211.51.161 - ASC3 - Econolite Type - ASC/3

Time Base Exceptions
Exception Day Program (MM) 5-5

Excep Day	Float/Fixed	Mon/Mon	DOW/DOM	WOM/Year	Day Plan

Ontario, CA

ECONOLITE CONTROL. PRODUCTS, INC.

Solutions that Move the World' Trvl

Milliken Ave. @ Concours - 10.211.51.161 - ASC3 - Econolite Type - ASC/3

Detectors

Detectors - Pg 1

Veh Det Phase Assignment (MM) 6-1

Vehicle Detector Plan Number - 1

Veh Detector	Called Phase	Type
1	1	N
2	2	N
3	3	N
4	4	N
5	5	N
6	6	N
7	7	N
8	8	N
10	2	N
12	4	N
14	6	N
16	8	N

Vehicle Detector Plan Number - 2

Veh Detector	Called Phase	Type

Vehicle Detector Plan Number - 3

Veh Detector	Called Phase	Type

Vehicle Detector Plan Number - 4

Veh Detector	Called Phase	Type

Vehicle Detector Setup (MM) 6-2

Veh Detector	Type	TS2 Detector	Description
1	N-NTCIP	Yes	
2	N-NTCIP	Yes	
3	N-NTCIP	Yes	
4	N-NTCIP	Yes	
5	N-NTCIP	Yes	
6	N-NTCIP	Yes	
7	N-NTCIP	Yes	
8	N-NTCIP	Yes	
9	N-NTCIP	Yes	
10	N-NTCIP	Yes	
11	N-NTCIP	Yes	
12	N-NTCIP	Yes	
13	N-NTCIP	Yes	
14	N-NTCIP	Yes	
15	N-NTCIP	Yes	
16	N-NTCIP	Yes	
17	N-NTCIP	Yes	
18	N-NTCIP	Yes	
19	N-NTCIP	Yes	
20	N-NTCIP	Yes	
21	N-NTCIP	Yes	
22	N-NTCIP	Yes	
23	N-NTCIP	Yes	
24	N-NTCIP	Yes	
25	N-NTCIP	Yes	
26	N-NTCIP	Yes	
27	N-NTCIP	Yes	

28	N-NTCIP	Yes	
29	N-NTCIP	Yes	
30	N-NTCIP	Yes	
31	N-NTCIP	Yes	
32	N-NTCIP	Yes	
33	N-NTCIP	Yes	
34	N-NTCIP	Yes	
35	N-NTCIP	Yes	
36	N-NTCIP	Yes	
37	N-NTCIP	Yes	
38	N-NTCIP	Yes	
39	N-NTCIP	Yes	
40	N-NTCIP	Yes	
41	N-NTCIP	Yes	
42	N-NTCIP	Yes	
43	N-NTCIP	Yes	
44	N-NTCIP	Yes	
45	N-NTCIP	Yes	
46	N-NTCIP	Yes	
47	N-NTCIP	Yes	
48	N-NTCIP	Yes	
49	N-NTCIP	Yes	
50	N-NTCIP	Yes	
51	N-NTCIP	Yes	
52	N-NTCIP	Yes	
53	N-NTCIP	Yes	
54	N-NTCIP	Yes	
55	N-NTCIP	Yes	
56	N-NTCIP	Yes	
57	N-NTCIP	Yes	
58	N-NTCIP	Yes	
59	N-NTCIP	Yes	
60	N-NTCIP	Yes	
61	N-NTCIP	Yes	
62	N-NTCIP	Yes	
63	N-NTCIP	Yes	
64	N-NTCIP	Yes	

Vehicle Detector Plan Number - 1

Veh Detector	Phase	ECPI Log	Call Option	Delay Time	Ext Option	Extend Time / Passage Time	Queue Lim. / Discon. Time	Use Added Initial	Cross Switch Ph	Lock In	NTCIP Vol.	NTCIP Occ.	Pmt Queue Delay
1	1	No	Yes	2.0	Passage	0.0	0	No	0	None	No	No	No
2	2	No	Yes	0.0	Passage	0.0	0	No	0	None	No	No	No
3	3	No	Yes	2.0	Passage	0.0	0	No	0	None	No	No	No
4	4	No	Yes	2.0	Passage	0.0	0	No	0	None	No	No	No
5	5	No	Yes	2.0	Passage	0.0	0	No	0	None	No	No	No
6	6	No	Yes	0.0	Passage	0.0	0	No	0	None	No	No	No
7	7	No	Yes	2.0	Passage	0.0	0	No	0	None	No	No	No
8	8	No	Yes	0.0	Passage	0.0	0	No	0	None	No	No	No
9	0	No	No	0.0	Passage	0.0	0	No	0	None	No	No	No
10	2	No	Yes	2.0	Passage	0.0	0	No	0	None	No	No	No
11	0	No	No	0.0	Passage	0.0	0	No	0	None	No	No	No
12	4	No	Yes	2.0	Passage	0.0	0	No	0	None	No	No	No
13	0	No	No	2.0	Passage	0.0	0	No	0	None	No	No	No
14	6	No	Yes	0.0	Passage	0.0	0	No	0	None	No	No	No
15	0	No	No	0.0	Passage	0.0	0	No	0	None	No	No	No
16	8	No	Yes	2.0	Passage	0.0	0	No	0	None	No	No	No
21	5	No	No	0.0	None	0.0	0	No	0	None	No	No	No
22	6	No	No	0.0	None	0.0	0	No	0	None	No	No	No
23	7	No	No	0.0	None	0.0	0	No	0	None	No	No	No
24	8	No	No	0.0	None	0.0	0	No	0	None	No	No	No

Vehicle Detector Plan Number - 2

Veh Detector	Phase	ECPI Log	Call Option	Delay Time	Ext Option	Extend Time / Passage	Queue Lim. / Discon.	Use Added Initial	Cross Switch Ph	Lock In	NTCIP Vol.	NTCIP Occ.	Pmt Queue Delay

						Time	Time						
1	1	No	Yes	0.0	Passage	0.0	0	No	0	None	No	No	No
2	2	No	Yes	0.0	Passage	0.0	0	No	0	None	No	No	No
3	3	No	Yes	0.0	Passage	0.0	0	No	0	None	No	No	No
4	4	No	Yes	0.0	Passage	0.0	0	No	0	None	No	No	No
5	5	No	Yes	0.0	Passage	0.0	0	No	0	None	No	No	No
6	6	No	Yes	0.0	Passage	0.0	0	No	0	None	No	No	No
7	7	No	Yes	0.0	Passage	0.0	0	No	0	None	No	No	No
8	8	No	Yes	0.0	Passage	0.0	0	No	0	None	No	No	No
9	9	No	Yes	0.0	Passage	0.0	0	No	0	None	No	No	No
10	10	No	Yes	0.0	Passage	0.0	0	No	0	None	No	No	No
11	11	No	Yes	0.0	Passage	0.0	0	No	0	None	No	No	No
12	12	No	Yes	0.0	Passage	0.0	0	No	0	None	No	No	No
13	13	No	Yes	0.0	Passage	0.0	0	No	0	None	No	No	No
14	14	No	Yes	0.0	Passage	0.0	0	No	0	None	No	No	No
15	15	No	Yes	0.0	Passage	0.0	0	No	0	None	No	No	No
16	16	No	Yes	0.0	Passage	0.0	0	No	0	None	No	No	No

Vehicle Detector Plan Number - 3

Veh Detector	Phase	ECPI Log	Call Option	Delay Time	Ext Option	Extend Time / Passage Time	Queue Lim. / Discon. Time	Use Added Initial	Cross Switch Ph	Lock In	NTCIP Vol.	NTCIP Occ.	Pmt Queue Delay
1	1	No	Yes	0.0	Passage	0.0	0	No	0	None	No	No	No
2	2	No	Yes	0.0	Passage	0.0	0	No	0	None	No	No	No
3	3	No	Yes	0.0	Passage	0.0	0	No	0	None	No	No	No
4	4	No	Yes	0.0	Passage	0.0	0	No	0	None	No	No	No
5	5	No	Yes	0.0	Passage	0.0	0	No	0	None	No	No	No
6	6	No	Yes	0.0	Passage	0.0	0	No	0	None	No	No	No
7	7	No	Yes	0.0	Passage	0.0	0	No	0	None	No	No	No
8	8	No	Yes	0.0	Passage	0.0	0	No	0	None	No	No	No
9	9	No	Yes	0.0	Passage	0.0	0	No	0	None	No	No	No
10	10	No	Yes	0.0	Passage	0.0	0	No	0	None	No	No	No
11	11	No	Yes	0.0	Passage	0.0	0	No	0	None	No	No	No
12	12	No	Yes	0.0	Passage	0.0	0	No	0	None	No	No	No
13	13	No	Yes	0.0	Passage	0.0	0	No	0	None	No	No	No
14	14	No	Yes	0.0	Passage	0.0	0	No	0	None	No	No	No
15	15	No	Yes	0.0	Passage	0.0	0	No	0	None	No	No	No
16	16	No	Yes	0.0	Passage	0.0	0	No	0	None	No	No	No

Vehicle Detector Plan Number - 4

Veh Detector	Phase	ECPI Log	Call Option	Delay Time	Ext Option	Extend Time / Passage Time	Queue Lim. / Discon. Time	Use Added Initial	Cross Switch Ph	Lock In	NTCIP Vol.	NTCIP Occ.	Pmt Queue Delay
1	1	No	Yes	0.0	Passage	0.0	0	No	0	None	No	No	No
2	2	No	Yes	0.0	Passage	0.0	0	No	0	None	No	No	No
3	3	No	Yes	0.0	Passage	0.0	0	No	0	None	No	No	No
4	4	No	Yes	0.0	Passage	0.0	0	No	0	None	No	No	No
5	5	No	Yes	0.0	Passage	0.0	0	No	0	None	No	No	No
6	6	No	Yes	0.0	Passage	0.0	0	No	0	None	No	No	No
7	7	No	Yes	0.0	Passage	0.0	0	No	0	None	No	No	No
8	8	No	Yes	0.0	Passage	0.0	0	No	0	None	No	No	No
9	9	No	Yes	0.0	Passage	0.0	0	No	0	None	No	No	No
10	10	No	Yes	0.0	Passage	0.0	0	No	0	None	No	No	No
11	11	No	Yes	0.0	Passage	0.0	0	No	0	None	No	No	No
12	12	No	Yes	0.0	Passage	0.0	0	No	0	None	No	No	No
13	13	No	Yes	0.0	Passage	0.0	0	No	0	None	No	No	No
14	14	No	Yes	0.0	Passage	0.0	0	No	0	None	No	No	No
15	15	No	Yes	0.0	Passage	0.0	0	No	0	None	No	No	No
16	16	No	Yes	0.0	Passage	0.0	0	No	0	None	No	No	No

Ped Detector Phase Assignment (MM) 6-3

Mode: NTCIP

Called Phase	Detector
1	1
2	2
3	3

4	4
5	5
6	6
7	7
8	8
9	9
10	10
11	11
12	12
13	13
14	14
15	15
16	16

Ontario, CA

ECONOLITE CONTROL. PRODUCTS, INC.

Solutions that Move the World' Trvl

Milliken Ave. @ Concours - 10.211.51.161 - ASC3 - Econolite Type - ASC/3

Detectors

Detectors - Pg 2

Log - Speed Detector Setup (MM) 6-4

NTCIP Log Period: 60 ECPI Log Period: 0 Length Unit: Inches

Speed Detector	Local Detector	One/Two Detector	Vehicle Length	Trap length	Enable Log
1	0	1	0	0	No
2	0	1	0	0	No
3	0	1	0	0	No
4	0	1	0	0	No
5	0	1	0	0	No
6	0	1	0	0	No
7	0	1	0	0	No
8	0	1	0	0	No
9	0	1	0	0	No
10	0	1	0	0	No
11	0	1	0	0	No
12	0	1	0	0	No
13	0	1	0	0	No
14	0	1	0	0	No
15	0	1	0	0	No
16	0	1	0	0	No

Vehicle Detector Diagnostics (MM) 6-5

Veh Diagnostic Plan Number - 1

Det	Counts	Act	Pres	Multiplier	Failed Time	Failed Call Delay

Veh Diagnostic Plan Number - 2

Det	Counts	Act	Pres	Multiplier	Failed Time	Failed Call Delay

Veh Diagnostic Plan Number - 3

Det	Counts	Act	Pres	Multiplier	Failed Time	Failed Call Delay

Veh Diagnostic Plan Number - 4

Det	Counts	Act	Pres	Multiplier	Failed Time	Failed Call Delay

Pedestrian Detector Diagnostics (MM) 6-6

Ped Diagnostic Plan Number - 1

Det	Counts	Act	Pres	Multiplier

Ped Diagnostic Plan Number - 2

Det	Counts	Act	Pres	Multiplier

Ped Diagnostic Plan Number - 3

Det	Counts	Act	Pres	Multiplier

Ped Diagnostic Plan Number - 4

Det	Counts	Act	Pres	Multiplier

Ontario, CA

ECONOLITE

MOVING TRAFFIC FORWARD

Milliken Ave @ Inland Empire Boulevard - 10.211.51.171 - ASC3 - Econolite Type - ASC/3

Configuration Controller Sequence

Phase Ring Sequence and Assignment (MM) 1-1-1

Hardware Alternate Sequence Enable: No

Phase Ring Sequence.....(Note: Sequences identical to the prior one are not printed)

	01	02	03	04	05	06	07	08	09	10	11	12	13	14	15	16
	B		B		B		B									
Sequence 1																
Ring 1	1	2	3	4	9	10	.	.	.	.	.	.	.	.	.	.
Ring 2	5	6	7	8	11	12	.	.	.	.	.	.	.	.	.	.
Sequence 2																
Ring 1	2	1	3	4	9	10	.	.	.	.	.	.	.	.	.	.
Ring 2	5	6	7	8	11	12	.	.	.	.	.	.	.	.	.	.
Sequence 3																
Ring 1	1	2	4	3	9	10	.	.	.	.	.	.	.	.	.	.
Ring 2	5	6	7	8	11	12	.	.	.	.	.	.	.	.	.	.
Sequence 4																
Ring 1	1	2	4	3	10	9	.	.	.	.	.	.	.	.	.	.
Ring 2	5	6	7	8	11	12	.	.	.	.	.	.	.	.	.	.
Sequence 5																
Ring 1	1	2	3	4	9	10	.	.	.	.	.	.	.	.	.	.
Ring 2	6	5	7	8	11	12	.	.	.	.	.	.	.	.	.	.
Sequence 6																
Ring 1	1	2	3	4	10	9	.	.	.	.	.	.	.	.	.	.
Ring 2	6	5	7	8	11	12	.	.	.	.	.	.	.	.	.	.
Sequence 7																
Ring 1	1	2	3	4	9	10	.	.	.	.	.	.	.	.	.	.
Ring 2	6	5	7	8	12	11	.	.	.	.	.	.	.	.	.	.
Sequence 8																
Ring 1	1	2	3	4	10	9	.	.	.	.	.	.	.	.	.	.
Ring 2	6	5	7	8	12	11	.	.	.	.	.	.	.	.	.	.
Sequence 9																
Ring 1	1	2	3	4	9	10	.	.	.	.	.	.	.	.	.	.
Ring 2	5	6	8	7	11	12	.	.	.	.	.	.	.	.	.	.
Sequence 10																
Ring 1	2	1	3	4	10	9	.	.	.	.	.	.	.	.	.	.
Ring 2	5	6	8	7	11	12	.	.	.	.	.	.	.	.	.	.
Sequence 11																
Ring 1	1	2	4	3	9	10	.	.	.	.	.	.	.	.	.	.
Ring 2	5	6	8	7	11	12	.	.	.	.	.	.	.	.	.	.
Sequence 12																
Ring 1	2	1	4	3	10	9	.	.	.	.	.	.	.	.	.	.

Ring 2	|	**5**	**6**	|	**8**	**7**	|	**11**	**12**	|	.	.	.	.	.	.	.	.	.	.
Sequence 13																					
Ring 1	|	**1**	**2**	|	**3**	**4**	|	**9**	**10**	|	.	.	.	.	.	.	.	.	.	.
Ring 2	|	**6**	**5**	|	**8**	**7**	|	**12**	**11**	|	.	.	.	.	.	.	.	.	.	.
Sequence 14																					
Ring 1	|	**2**	**1**	|	**3**	**4**	|	**10**	**9**	|	.	.	.	.	.	.	.	.	.	.
Ring 2	|	**6**	**5**	|	**8**	**7**	|	**12**	**11**	|	.	.	.	.	.	.	.	.	.	.
Sequence 15																					
Ring 1	|	**1**	**2**	|	**4**	**3**	|	**9**	**10**	|	.	.	.	.	.	.	.	.	.	.
Ring 2	|	**6**	**5**	|	**8**	**7**	|	**12**	**11**	|	.	.	.	.	.	.	.	.	.	.
Sequence 16																					
Ring 1	|	**2**	**1**	|	**4**	**3**	|	**10**	**9**	|	.	.	.	.	.	.	.	.	.	.
Ring 2	|	**6**	**5**	|	**8**	**7**	|	**12**	**11**	|	.	.	.	.	.	.	.	.	.	.

Phases In Use/Exclusive Ped (MM) 1-2

Phase	**1**	**2**	**3**	**4**	**5**	**6**	**7**	**8**	**9**	**10**	**11**	**12**	**13**	**14**	**15**	**16**
Phases In Use	X	X	X	X	X	X	X	X								
Exclusive Ped																

Phase Compatibility (MM) 1-1-2

Phase	
n/a	Barrier Mode

Phase and Overlap Descriptions

Phase	**1**	**2**	**3**	**4**	**5**	**6**	**7**	**8**	**9**	**10**	**11**	**12**	**13**	**14**	**15**	**16**
Description																
Overlap	**A**	**B**	**C**	**D**	**E**	**F**	**G**	**H**	**I**	**J**	**K**	**L**	**M**	**N**	**O**	**P**
Description																

Administration (MM) 1-7-1

Enable Controller/Cabinet Interlock CRC	No
CRC (16 bit)	828B
Enable Automatic Backup to Datakey	No

Backup Prevent (MM) 1-1-3

Phases	1	2	3	4	5	6	7	8	9	10	11	12	13	14	15	16
Timing Phases 1		.	.	.	.	.	.	.	.	.	.	.	.	.	.	.
2	.		.	.	.	.	.	.	.	.	.	.	.	.	.	.
3	.	.		.	.	.	.	.	.	.	.	.	.	.	.	.
4	.	.	.		.	.	.	.	.	.	.	.	.	.	.	.
5	.	.	.	.		.	.	.	.	.	.	.	.	.	.	.
6	.	.	.	.	.		.	.	.	.	.	.	.	.	.	.
7	.	.	.	.	.	.		.	.	.	.	.	.	.	.	.
8	.	.	.	.	.	.	.		.	.	.	.	.	.	.	.
9	.	.	.	.	.	.	.	.		.	.	.	.	.	.	.
10	.	.	.	.	.	.	.	.	.		.	.	.	.	.	.
11	.	.	.	.	.	.	.	.	.	.		.	.	.	.	.
12	.	.	.	.	.	.	.	.	.	.	.		.	.	.	.
13	.	.	.	.	.	.	.	.	.	.	.	.		.	.	.
14	.	.	.	.	.	.	.	.	.	.	.	.	.		.	.
15	.	.	.	.	.	.	.	.	.	.	.	.	.	.		.
16	.	.	.	.	.	.	.	.	.	.	.	.	.	.	.	

Simultaneous Gap (MM) 1-1-4

Phases	1	2	3	4	5	6	7	8	9	10	11	12	13	14	15	16
1		.	.	.	.	.	.	.	.	.	.	.	.	.	.	.
2	.		.	.	.	.	.	.	.	.	.	.	.	.	.	.
3	.	.		.	.	.	.	.	.	.	.	.	.	.	.	.
4	.	.	.		.	.	.	.	.	.	.	.	.	.	.	.
5	.	.	.	.		.	.	.	.	.	.	.	.	.	.	.
Phase 6	.	.	.	.	.		.	.	.	.	.	.	.	.	.	.
Must 7	.	.	.	.	.	.		.	.	.	.	.	.	.	.	.
Gap 8	.	.	.	.	.	.	.		.	.	.	.	.	.	.	.
With 9	.	.	.	.	.	.	.	.		.	.	.	.	.	.	.
Phase 10	.	.	.	.	.	.	.	.	.		.	.	.	.	.	.
11	.	.	.	.	.	.	.	.	.	.		.	.	.	.	.
12	.	.	.	.	.	.	.	.	.	.	.		.	.	.	.
13	.	.	.	.	.	.	.	.	.	.	.	.		.	.	.
14	.	.	.	.	.	.	.	.	.	.	.	.	.		.	.
15	.	.	.	.	.	.	.	.	.	.	.	.	.	.		.
16	.	.	.	.	.	.	.	.	.	.	.	.	.	.	.	
Disable	.	.	.	.	.	.	.	.	.	.	.	.	.	.	.	.

Load Switch Assignments (MM) 1-3

	Phase / Overlap	Type	Dimming				Power Up	Auto		Flash Together
			Red	Yellow	Green	Dark		Red	Yellow	
1	1	V				-	Auto	X		
2	2	V				-	Auto	X		X
3	3	V				-	Auto	X		
4	4	V				-	Auto	X		X
5	5	V				+	Auto	X		
6	6	V				+	Auto	X		X
7	7	V				+	Auto	X		
8	8	V				+	Auto	X		X
9	2	P				-	Auto	X		

10	4	P				-	Auto	X		
11	6	P				+	Auto	X		
12	8	P				+	Auto	X		
13	0	.				-	Auto	X		
14	0	.				+	Auto	X		
15	0	.				-	Auto	X		
16	0	.				+	Auto	X		

Ontario, CA

ECONOLITE

MOVING TRAFFIC FORWARD

Milliken Ave @ Inland Empire Boulevard - 10.211.51.171 - ASC3 - Econolite Type - ASC/3

Configuration Port 1 (SDLC)

Port 1 SDLC (MM) 1-4-1

BIU	1	2	3	4	5	6	7	8
Term & Facility	X	X						
Detector Rack	X							

Enable TS2/MMU Type Cabinet: Yes
Enable MMU Extended Status: Yes
Enable SDLC Stop Time: Yes
Enable 3 Critical RFE's Lockup: Yes

MMU Program (MM) 1-4-2

Channel Can Serve With Channel	
Channel 1	**Channel 2**
1	5
1	6
1	11
2	5
2	6
2	9
2	11
3	7
3	8
3	12
4	7
4	8
4	10
4	12
5	9
6	9
6	11
7	10
8	10
8	12
9	11
10	12

Color Check Enable (MM) 1-4-3

Enable Color Check: Yes

MMU/LS	1	2	3	4	5	6	7	8	9	10	11	12	13	14	15	16
Green													X	X	X	X
Yellow									X	X	X	X	X	X	X	X
Red													X	X	X	X

Secondary Stations/Tests (MM) 1-4-4

ID	1	2	3	4	5	6	7	8	MMU
Term & Facility									

ID	1	2	3	4	5	6	7	8	Diag
Detector Rack									

Enable SDLC Diagnostic Test: No

Ontario, CA

ECONOLITE

MOVING TRAFFIC FORWARD

Milliken Ave @ Inland Empire Boulevard - 10.211.51.171 - ASC3 - Econolite Type - ASC/3

Configuration Communications 1 (SDLC)

Ethernet Port Configuration (MM) 1-5-1

DHCP Enable:	No
Controller IP:	10.211.51.171
Subnet Mask:	255.255.255.0
Default Gateway IP:	10.211.51.1
Server IP:	10.10.5.28

NTCIP (MM) 1-5-5

NTCIP Backup Time (Sec):	0
NTCIP UDP Port:	501
Ethernet Priority:	1
Port 2 Priority (Port C50S for 2070):	4
Port 3A Priority (Port C21S for 2070):	2
Port 3B Priority (Port C22S for 2070):	3

Port Configuration (MM) 1-5-2 to 1-5-4

Port	2 (C50S)	3A (C21S)	3B (C22S)
Protocol	TERMINAL	NTCIP	ECPIP
Enable	Yes	No	No
Data Rate (BPS)	38.4K	19.2K	1200
Data, Parity, Stop	8 N 1	8 N 1	8 O 1
Address	0	0	1
Telemetry Response Delay	0.0	0.0	0.9
Duplex - Half or Full	Half	Full	Full
Flow Control	No	Yes	Yes
Group Address	0	0	0
Single Flag Enable	Yes	Yes	Yes
RTS to CTS Delay	n/a	n/a	3.0
RTS Turn Off Delay	n/a	n/a	2.0
Dropout Time	10	10	300
Early RTS	n/a	n/a	No
Telemetry Mode	n/a	n/a	FSK
ATCS Railroad	0	n/a	n/a
ATCS Railroad Line	0	n/a	n/a
ATCS Group	0	n/a	n/a
Wayside Device	0	n/a	n/a
ATC Device	0	n/a	n/a
Wayside Subnode	0	n/a	n/a
ATC Subnode	0	n/a	n/a

ECPIP (MM) 1-5-6

Controller Address:	1
Expanded System Detector Address:	0

System Detector Assignment

System Detector	Local Detector

Ontario, CA

ECONOLITE

MOVING TRAFFIC FORWARD

Milliken Ave @ Inland Empire Boulevard - 10.211.51.171 - ASC3 - Econolite Type - ASC/3

Configuration Logging / Display

Event Logging (MM) 1-6-1

Critical RFE's (MMU/TF)	Yes	3 Critical Errors Within 24 Hours	Yes
MMU Flash Faults	Yes	Local Flash Fault	Yes
Non-Critical RFE's (Det/Test)	Yes	Detector Errors	Yes
Coordination Errors	Yes	Controller Download	Yes
Preemption Events	Yes	TSP Events	Yes
Power On/Off	Yes	Low Battery	Yes
Access	Yes	Data Change	Yes
Online / Offline	Yes		

Alarm Event	1	2	3	4	5	6	7	8	9	10	11	12	13	14	15	16
Enable Logging	X	X	X	X	X	X	X	X	X	X	X	X	X	X	X	X

Display Options (MM) 1-7-2

Key Click Enable:	Yes
Backlight Enable:	Yes
LED Mode:	Auto
Display Mode:	Basic
Screen Format:	Basic
Trans Mode Pop-Up Disable:	No

Sign On (MM) 8-5

Sign On Message Line 1: Milliken @ I E B
Sign On Message Line 2: City of Ontario

Software Modules (MM) 8-7

Application Version: 02.65.30
OS (Boot) Version: 01.14.03

Ontario, CA

ECONOLITE

MOVING TRAFFIC FORWARD

Milliken Ave @ Inland Empire Boulevard - 10.211.51.171 - ASC3 - Econolite Type - ASC/3

Logic Processor Page 1

Logic Statement Control (MM) 1-8-1

Logic #	Statement Control

Ontario, CA

ECONOLITE

MOVING TRAFFIC FORWARD

Milliken Ave @ Inland Empire Boulevard - 10.211.51.171 - ASC3 - Econolite Type - ASC/3

Logic Processor Page 2

Logic Statements (MM) 1-8-2

Ontario, CA

- ECOIMOLITE

MOVING TRAFFIC FORWARD

Milliken Ave @ Inland Empire Boulevard - 10.211.51.171 - ASC3 - Econolite Type - ASC/3

Controller Timing Plan (MM) 2-1

Plan 1

Phase	1	2	3	4	5	6	7	8	9	10	11	12	13	14	15	16
Direction																
Min Green	8	8	10	10	8	8	10	10	5	5	5	5	5	5	5	5
Bk Min Green	0	0	0	0	0	0	0	0	0	0	0	0	0	0	0	0
CS Min Green	0	0	0	0	0	0	0	0	0	0	0	0	0	0	0	0
Delay Green	0	0	0	0	0	0	0	0	0	0	0	0	0	0	0	0
Walk	0	4	0	4	0	4	0	4	0	10	0	10	0	10	0	10
Walk2	0	0	0	0	0	0	0	0	0	0	0	0	0	0	0	0
Walk Max	0	0	0	0	0	0	0	0	0	0	0	0	0	0	0	0
Ped Clear	0	30	0	39	0	30	0	39	0	16	0	16	0	16	0	16
Ped Clear 2	0	0	0	0	0	0	0	0	0	0	0	0	0	0	0	0
Ped Clear Max	0	0	0	0	0	0	0	0	0	0	0	0	0	0	0	0
Ped CO	0	0	0	0	0	0	0	0	0	0	0	0	0	0	0	0
Vehicle Ext	2.0	3.0	2.0	2.5	2.0	3.0	2.0	2.5	5.0	5.0	5.0	5.0	5.0	5.0	5.0	5.0
Vehicle Ext 2	0.0	0.0	0.0	0.0	0.0	0.0	0.0	0.0	0.0	0.0	0.0	0.0	0.0	0.0	0.0	0.0
Max1	20	35	20	25	20	35	20	25	35	35	35	35	35	35	35	35
Max2	0	0	0	0	0	0	0	0	40	40	40	40	40	40	40	40
Max3	0	0	0	0	0	0	0	0	0	0	0	0	0	0	0	0
DYM Max	25	55	25	65	55	55	65	25	0	0	0	0	0	0	0	0
Dym Step	10.0	10.0	5.0	10.0	10.0	10.0	5.0	10.0	0.0	0.0	0.0	0.0	0.0	0.0	0.0	0.0
Yellow	5.0	5.0	5.0	5.0	5.0	5.0	5.0	5.0	3.0	3.0	3.0	3.0	3.0	3.0	3.0	3.0
Red Clear	2.0	2.0	2.0	2.0	2.0	2.0	2.0	2.0	1.0	1.0	1.0	1.0	1.0	1.0	1.0	1.0
Red Max	0.0	0.0	0.0	0.0	0.0	0.0	0.0	0.0	0.0	0.0	0.0	0.0	0.0	0.0	0.0	0.0
Red Revert	5.0	5.0	5.0	5.0	5.0	5.0	5.0	5.0	2.0	2.0	2.0	2.0	2.0	2.0	2.0	2.0
Act B4	0	0	0	0	0	0	0	0	0	0	0	0	0	0	0	0
Sec/Act	0.0	0.0	0.0	0.0	0.0	0.0	0.0	0.0	0.0	0.0	0.0	0.0	0.0	0.0	0.0	0.0
Max Int	0	0	0	0	0	0	0	0	0	0	0	0	0	0	0	0
Time B4	0	0	0	0	0	0	0	0	0	0	0	0	0	0	0	0
Cars Wt	0	0	0	0	0	0	0	0	0	0	0	0	0	0	0	0
STPTDuc	0.0	0.0	0.0	0.0	0.0	0.0	0.0	0.0	0.0	0.0	0.0	0.0	0.0	0.0	0.0	0.0
TTReduc	0	0	0	0	0	0	0	0	0	0	0	0	0	0	0	0
Min Gap	0.0	0.0	0.0	0.0	0.0	0.0	0.0	0.0	0.0	0.0	0.0	0.0	0.0	0.0	0.0	0.0

Plan 2

Phase	1	2	3	4	5	6	7	8	9	10	11	12	13	14	15	16
Direction																
Min Green	5	5	5	5	5	5	5	5	5	5	5	5	5	5	5	5
Bk Min Green	0	0	0	0	0	0	0	0	0	0	0	0	0	0	0	0
CS Min Green	0	0	0	0	0	0	0	0	0	0	0	0	0	0	0	0
Delay Green	0	0	0	0	0	0	0	0	0	0	0	0	0	0	0	0
Walk	0	10	0	10	0	10	0	10	0	10	0	10	0	10	0	10
Walk2	0	0	0	0	0	0	0	0	0	0	0	0	0	0	0	0
Walk Max	0	0	0	0	0	0	0	0	0	0	0	0	0	0	0	0
Ped Clear	0	16	0	16	0	16	0	16	0	16	0	16	0	16	0	16
Ped Clear 2	0	0	0	0	0	0	0	0	0	0	0	0	0	0	0	0
Ped Clear Max	0	0	0	0	0	0	0	0	0	0	0	0	0	0	0	0
Ped CO	0	0	0	0	0	0	0	0	0	0	0	0	0	0	0	0
Vehicle Ext	5.0	5.0	5.0	5.0	5.0	5.0	5.0	5.0	5.0	5.0	5.0	5.0	5.0	5.0	5.0	5.0
Vehicle Ext 2	0.0	0.0	0.0	0.0	0.0	0.0	0.0	0.0	0.0	0.0	0.0	0.0	0.0	0.0	0.0	0.0
Max1	35	35	35	35	35	35	35	35	35	35	35	35	35	35	35	35
Max2	40	40	40	40	40	40	40	40	40	40	40	40	40	40	40	40
Max3	0	0	0	0	0	0	0	0	0	0	0	0	0	0	0	0
DYM Max	0	0	0	0	0	0	0	0	0	0	0	0	0	0	0	0
Dym Step	0.0	0.0	0.0	0.0	0.0	0.0	0.0	0.0	0.0	0.0	0.0	0.0	0.0	0.0	0.0	0.0
Yellow	3.0	3.0	3.0	3.0	3.0	3.0	3.0	3.0	3.0	3.0	3.0	3.0	3.0	3.0	3.0	3.0
Red Clear	1.0	1.0	1.0	1.0	1.0	1.0	1.0	1.0	1.0	1.0	1.0	1.0	1.0	1.0	1.0	1.0
Red Max	0.0	0.0	0.0	0.0	0.0	0.0	0.0	0.0	0.0	0.0	0.0	0.0	0.0	0.0	0.0	0.0
Red Revert	2.0	2.0	2.0	2.0	2.0	2.0	2.0	2.0	2.0	2.0	2.0	2.0	2.0	2.0	2.0	2.0
Act B4	0	0	0	0	0	0	0	0	0	0	0	0	0	0	0	0
Sec/Act	0.0	0.0	0.0	0.0	0.0	0.0	0.0	0.0	0.0	0.0	0.0	0.0	0.0	0.0	0.0	0.0
Max Int	0	0	0	0	0	0	0	0	0	0	0	0	0	0	0	0
Time B4	0	0	0	0	0	0	0	0	0	0	0	0	0	0	0	0
Cars Wt	0	0	0	0	0	0	0	0	0	0	0	0	0	0	0	0
STPTDuc	0.0	0.0	0.0	0.0	0.0	0.0	0.0	0.0	0.0	0.0	0.0	0.0	0.0	0.0	0.0	0.0
TTReduc	0	0	0	0	0	0	0	0	0	0	0	0	0	0	0	0
Min Gap	0.0	0.0	0.0	0.0	0.0	0.0	0.0	0.0	0.0	0.0	0.0	0.0	0.0	0.0	0.0	0.0

Plan 3

Phase	1	2	3	4	5	6	7	8	9	10	11	12	13	14	15	16
Direction																
Min Green	5	5	5	5	5	5	5	5	5	5	5	5	5	5	5	5
Bk Min Green	0	0	0	0	0	0	0	0	0	0	0	0	0	0	0	0
CS Min Green	0	0	0	0	0	0	0	0	0	0	0	0	0	0	0	0
Delay Green	0	0	0	0	0	0	0	0	0	0	0	0	0	0	0	0
Walk	0	10	0	10	0	10	0	10	0	10	0	10	0	10	0	10
Walk2	0	0	0	0	0	0	0	0	0	0	0	0	0	0	0	0
Walk Max	0	0	0	0	0	0	0	0	0	0	0	0	0	0	0	0
Ped Clear	0	16	0	16	0	16	0	16	0	16	0	16	0	16	0	16
Ped Clear 2	0	0	0	0	0	0	0	0	0	0	0	0	0	0	0	0
Ped Clear Max	0	0	0	0	0	0	0	0	0	0	0	0	0	0	0	0
Ped CO	0	0	0	0	0	0	0	0	0	0	0	0	0	0	0	0
Vehicle Ext	5.0	5.0	5.0	5.0	5.0	5.0	5.0	5.0	5.0	5.0	5.0	5.0	5.0	5.0	5.0	5.0
Vehicle Ext 2	0.0	0.0	0.0	0.0	0.0	0.0	0.0	0.0	0.0	0.0	0.0	0.0	0.0	0.0	0.0	0.0
Max1	35	35	35	35	35	35	35	35	35	35	35	35	35	35	35	35
Max2	40	40	40	40	40	40	40	40	40	40	40	40	40	40	40	40
Max3	0	0	0	0	0	0	0	0	0	0	0	0	0	0	0	0
DYM Max	0	0	0	0	0	0	0	0	0	0	0	0	0	0	0	0
Dym Step	0.0	0.0	0.0	0.0	0.0	0.0	0.0	0.0	0.0	0.0	0.0	0.0	0.0	0.0	0.0	0.0
Yellow	3.0	3.0	3.0	3.0	3.0	3.0	3.0	3.0	3.0	3.0	3.0	3.0	3.0	3.0	3.0	3.0
Red Clear	1.0	1.0	1.0	1.0	1.0	1.0	1.0	1.0	1.0	1.0	1.0	1.0	1.0	1.0	1.0	1.0
Red Max	0.0	0.0	0.0	0.0	0.0	0.0	0.0	0.0	0.0	0.0	0.0	0.0	0.0	0.0	0.0	0.0
Red Revert	2.0	2.0	2.0	2.0	2.0	2.0	2.0	2.0	2.0	2.0	2.0	2.0	2.0	2.0	2.0	2.0
Act B4	0	0	0	0	0	0	0	0	0	0	0	0	0	0	0	0
Sec/Act	0.0	0.0	0.0	0.0	0.0	0.0	0.0	0.0	0.0	0.0	0.0	0.0	0.0	0.0	0.0	0.0
Max Int	0	0	0	0	0	0	0	0	0	0	0	0	0	0	0	0
Time B4	0	0	0	0	0	0	0	0	0	0	0	0	0	0	0	0
Cars Wt	0	0	0	0	0	0	0	0	0	0	0	0	0	0	0	0
STPTDuc	0.0	0.0	0.0	0.0	0.0	0.0	0.0	0.0	0.0	0.0	0.0	0.0	0.0	0.0	0.0	0.0
TTReduc	0	0	0	0	0	0	0	0	0	0	0	0	0	0	0	0
Min Gap	0.0	0.0	0.0	0.0	0.0	0.0	0.0	0.0	0.0	0.0	0.0	0.0	0.0	0.0	0.0	0.0

Plan 4

Phase	1	2	3	4	5	6	7	8	9	10	11	12	13	14	15	16
Direction																
Min Green	5	5	5	5	5	5	5	5	5	5	5	5	5	5	5	5
Bk Min Green	0	0	0	0	0	0	0	0	0	0	0	0	0	0	0	0
CS Min Green	0	0	0	0	0	0	0	0	0	0	0	0	0	0	0	0
Delay Green	0	0	0	0	0	0	0	0	0	0	0	0	0	0	0	0
Walk	0	10	0	10	0	10	0	10	0	10	0	10	0	10	0	10
Walk2	0	0	0	0	0	0	0	0	0	0	0	0	0	0	0	0
Walk Max	0	0	0	0	0	0	0	0	0	0	0	0	0	0	0	0
Ped Clear	0	16	0	16	0	16	0	16	0	16	0	16	0	16	0	16
Ped Clear 2	0	0	0	0	0	0	0	0	0	0	0	0	0	0	0	0
Ped Clear Max	0	0	0	0	0	0	0	0	0	0	0	0	0	0	0	0
Ped CO	0	0	0	0	0	0	0	0	0	0	0	0	0	0	0	0
Vehicle Ext	5.0	5.0	5.0	5.0	5.0	5.0	5.0	5.0	5.0	5.0	5.0	5.0	5.0	5.0	5.0	5.0
Vehicle Ext 2	0.0	0.0	0.0	0.0	0.0	0.0	0.0	0.0	0.0	0.0	0.0	0.0	0.0	0.0	0.0	0.0
Max1	35	35	35	35	35	35	35	35	35	35	35	35	35	35	35	35
Max2	40	40	40	40	40	40	40	40	40	40	40	40	40	40	40	40
Max3	0	0	0	0	0	0	0	0	0	0	0	0	0	0	0	0
DYM Max	0	0	0	0	0	0	0	0	0	0	0	0	0	0	0	0
Dym Step	0.0	0.0	0.0	0.0	0.0	0.0	0.0	0.0	0.0	0.0	0.0	0.0	0.0	0.0	0.0	0.0
Yellow	3.0	3.0	3.0	3.0	3.0	3.0	3.0	3.0	3.0	3.0	3.0	3.0	3.0	3.0	3.0	3.0
Red Clear	1.0	1.0	1.0	1.0	1.0	1.0	1.0	1.0	1.0	1.0	1.0	1.0	1.0	1.0	1.0	1.0
Red Max	0.0	0.0	0.0	0.0	0.0	0.0	0.0	0.0	0.0	0.0	0.0	0.0	0.0	0.0	0.0	0.0
Red Revert	2.0	2.0	2.0	2.0	2.0	2.0	2.0	2.0	2.0	2.0	2.0	2.0	2.0	2.0	2.0	2.0
Act B4	0	0	0	0	0	0	0	0	0	0	0	0	0	0	0	0
Sec/Act	0.0	0.0	0.0	0.0	0.0	0.0	0.0	0.0	0.0	0.0	0.0	0.0	0.0	0.0	0.0	0.0
Max Int	0	0	0	0	0	0	0	0	0	0	0	0	0	0	0	0
Time B4	0	0	0	0	0	0	0	0	0	0	0	0	0	0	0	0
Cars Wt	0	0	0	0	0	0	0	0	0	0	0	0	0	0	0	0
STPTDuc	0.0	0.0	0.0	0.0	0.0	0.0	0.0	0.0	0.0	0.0	0.0	0.0	0.0	0.0	0.0	0.0
TTReduc	0	0	0	0	0	0	0	0	0	0	0	0	0	0	0	0
Min Gap	0.0	0.0	0.0	0.0	0.0	0.0	0.0	0.0	0.0	0.0	0.0	0.0	0.0	0.0	0.0	0.0

Ontario, CA

ECONOLITE

MOVING TRAFFIC FORWARD

Milliken Ave @ Inland Empire Boulevard - 10.211.51.171 - ASC3 - Econolite Type - ASC/3

Controller Overlaps

Vehicle Overlaps (MM) 2-2

Overlap	Type	Lag Green	Yellow	Red	Adv. Green

Phases

Overlap	Phase	Included	Protect	Ped Protect	Not Overlap	Modifier	Lag X Phases	Lag 2 Phases	Flash Green

PPLT FYA

Overlap	Protected Phase (Left Turn)	Permissive Phase (Opposing Thru)	Flashing Arrow Output	Flashing Arrow Output CH	Delay Start of FYA	Delay Start of Clearance	Action Plan SF Bit Disable	Ped Protected Enable

Guaranteed Minimum Time Data (MM) 2-4

Phase	Min Green	Walk	Ped Clear	Yellow	Red Clear	Overlap Green
A01	5	0	7	3.0	0.0	5
B02	5	0	7	3.0	0.0	5
C03	5	0	7	3.0	0.0	5
D04	5	0	7	3.0	0.0	5
E05	5	0	7	3.0	0.0	5
F06	5	0	7	3.0	0.0	5
G07	5	0	7	3.0	0.0	5
H08	5	0	7	3.0	0.0	5
I09	5	0	7	3.0	0.0	5
J10	5	0	7	3.0	0.0	5
K11	5	0	7	3.0	0.0	5
L12	5	0	7	3.0	0.0	5
M13	5	0	7	3.0	0.0	5
N14	5	0	7	3.0	0.0	5
O15	5	0	7	3.0	0.0	5
P16	5	0	7	3.0	0.0	5

Ontario, CA

ECONOLITE

MOVING TRAFFIC FORWARD

Milliken Ave @ Inland Empire Boulevard - 10.211.51.171 - ASC3 - Econolite Type - ASC/3

Controller Pedestrian Overlaps
Vehicle / Pedestrian Overlaps (MM) 2-3

Included	Pedestrian Overlaps

Ontario, CA

ECONOLITE

MOVING TRAFFIC FORWARD

Milliken Ave @ Inland Empire Boulevard - 10.211.51.171 - ASC3 - Econolite Type - ASC/3

Controller Start / Flash Data (MM) 2-5

Start Up

Phase	Phase Setting
1	.
2	G
3	.
4	.
5	.
6	G
7	.
8	.
9	.
10	.
11	.
12	.
13	.
14	.
15	.
16	.

Overlap
A
B
C
D

Flash Thru Mon: No
Flash Time: 15
All Red: 6
Power Start Seq: 1
MUTCD Enabled: Yes
Y->G: No

Automatic Flash

Entry
2
6

Exit
2

6

Overlap Exit
A
B
C
D

Flash Thru Mon:	No
Exit Flash:	W
Minimum Flash:	5
Mimimum Recall:	No
Cycle Through Phase:	No

Ontario, CA

- ECOIMOLITE

MOVING TRAFFIC FORWARD

Milliken Ave @ Inland Empire Boulevard - 10.211.51.171 - ASC3 - Econolite Type - ASC/3

Controller Options

Controller Options (MM) 2-6-1

Phase	1	2	3	4	5	6	7	8	9	10	11	12	13	14	15	16
Flashing Grn Ph	.	.	.	.	.	.	.	.	.	.	.	.	.	.	.	.
Guar Passage																
Non-Act I																
Non-Act II																
Dual Entry		X		X		X		X								
Cond Service			X				X									
Cond Reservice																
Ped Re-Service																
Rest In Walk																
Flashing Walk																
Ped Clr-Yel																
Ped Clr-Red																
IGRN + Veh Ext																

Ped Clear Protect: Off Unit Red Revert: 2.0 MUTCD 3 Seconds Don't Walk: No

Pre-Timed Mode (MM) 2-7

Enable Pre-Timed Mode: No Free Input Disables Pre-Timed: No

Phase	1		3	4		6	7		9	10	11	12	13	14	15	16
Pre-Timed																

Phase Recall Options (MM) 2-8

Plan # 1

	1	2	3	4	5	6	7	8	9	10	11	12	13	14	15	16
Lock Detector																
Vehicle Recall		X				X										
Ped Recall																
Max Recall																
Soft Recall																
No Rest																
AI Calc																

Ontario, CA

ECONOLITE

MOVING TRAFFIC FORWARD

Milliken Ave @ Inland Empire Boulevard - 10.211.51.171 - ASC3 - Econolite Type - ASC/3

Coordination Options

Options (MM) 3-1

Manual Pattern	Free	ECPI Coord	Yes
System Source	TBC	System Format	PTN
Splits In	Percent	Offsets In	Percent
Transition	Smooth	Max Select	MAXINH
Dwell / Add Time	0		
Delay Coord Wk-LZ	No	Force Off	Float
Offset Reference	Lead	Use Ped Time	Yes
Ped Recall	No	Ped Reservice	No
Local Zero Override	No	FO Added Ini Green	No
Re-sync Count	0	Multisync	No

Auto Perm Minimum Green (Seconds) (MM) 3-4

Phase	1	2	3	4	5	6	7	8	9	10	11	12	13	14	15	16
Minimum Green	0	0	0	0	0	0	0	0	0	0	0	0	0	0	0	0

Split Demand (MM) 3-5

Phase	1	2	3	4	5	6	7	8	9	10	11	12	13	14	15	16
Demand 1																
Demand 2																

Demand	1	2
Detector	0	0
Call Time (Sec)	0	0
Cycle Count	0	0

Ontario, CA

ECONOLITE

MOVING TRAFFIC FORWARD

Milliken Ave @ Inland Empire Boulevard - 10.211.51.171 - ASC3 - Econolite Type - ASC/3

Coordination Pattern Data
Coordinator Pattern Data (MM) 3-2

Coordinator Pattern # 11

Split Pattern	11	TS2 (Pat-Off)	3-2	Splits In	Percent
Cycle	100	Std (COS)	0	Offsets In	Percent
Offset Value	91%	Dwell/Add Time	0		
Actuated Coord	Yes	Timing Plan	0		
Actuated Walk Rest	No	Sequence	3		
Phase Reservice	No	Action Plan	0		
Max Select	MAXINH	Force Off	Float		

Split Preference Phases

Phase	1	2	3	4	5	6	7	8	9	10	11	12	13	14	15	16
Description																
Splits (Split Pat 11)	15	50	20	15	15	50	20	15	0	0	0	0	0	0	0	0
Pref 1	0	0	0	0	0	0	0	0	0	0	0	0	0	0	0	0
Pref 2	0	0	0	0	0	0	0	0	0	0	0	0	0	0	0	0

Ring	1	2	3	4
Ring Split Ext	0	0	0	0
Ring Displacement	-	0	0	0
Split Sum	100%	100%	0%	0%

Misc. Data

Veh Perm 1	0	Veh Perm 2	0	Veh Perm 2 Disp	0
Split Demand Pat 1	0	Split Demand Pat 2	0	Crossing Arterial Pat	0

Split Pattern

Phase	1	2	3	4	5	6	7	8	9	10	11	12	13	14	15	16
Coord Phase		X				X										
Vehicle Recall		X				X										
Pedestrian Recall																
Recall to Max. Time																
Omit Phase									X	X	X	X	X	X	X	X
Special Funciton Outputs																

Coordinator Pattern # 12

Split Pattern	12	TS2 (Pat-Off)	3-3	Splits In	Percent
Cycle	90	Std (COS)	0	Offsets In	Percent
Offset Value	0%	Dwell/Add Time	0		
Actuated Coord	Yes	Timing Plan	0		
Actuated Walk Rest	No	Sequence	3		
Phase Reservice	No	Action Plan	0		
Max Select	MAXINH	Force Off	Float		

Split Preference Phases

Phase	1	2	3	4	5	6	7	8	9	10	11	12	13	14	15	16
Description																
Splits (Split Pat 12)	15	50	10	25	10	55	10	25	0	0	0	0	0	0	0	0
Pref 1	0	0	0	0	0	0	0	0	0	0	0	0	0	0	0	0
Pref 2	0	0	0	0	0	0	0	0	0	0	0	0	0	0	0	0

Ring	1	2	3	4
Ring Split Ext	0	0	0	0
Ring Displacement	-	0	0	0
Split Sum	100%	100%	0%	0%

Misc. Data

Veh Perm 1	0	Veh Perm 2	0	Veh Perm 2 Disp	0	
Split Demand Pat 1	0	Split Demand Pat 2	0	Crossing Arterial Pat	0	

Split Pattern

Phase	1	2	3	4	5	6	7	8	9	10	11	12	13	14	15	16
Coord Phase		X				X										
Vehicle Recall		X				X										
Pedestrian Recall																
Recall to Max. Time																
Omit Phase									X	X	X	X	X	X	X	X
Special Funciton Outputs																

Coordinator Pattern # 13

Split Pattern	13	TS2 (Pat-Off)	4-1	Splits In	Percent
Cycle	100	Std (COS)	0	Offsets In	Percent
Offset Value	80%	Dwell/Add Time	0		
Actuated Coord	Yes	Timing Plan	0		
Actuated Walk Rest	No	Sequence	0		
Phase Reservice	No	Action Plan	0		
Max Select	MAXINH	Force Off	Float		

Split Preference Phases

Phase	1	2	3	4	5	6	7	8	9	10	11	12	13	14	15	16
Description																

Splits (Split Pat 13)	20	35	9	36	20	35	9	36	0	0	0	0	0	0	0	0
Pref 1	0	0	0	0	0	0	0	0	0	0	0	0	0	0	0	0
Pref 2	0	0	0	0	0	0	0	0	0	0	0	0	0	0	0	0

Ring	1	2	3	4
Ring Split Ext	0	0	0	0
Ring Displacement	-	0	0	0
Split Sum	100%	100%	0%	0%

Misc. Data

Veh Perm 1	0	Veh Perm 2	0	Veh Perm 2 Disp	0	
Split Demand Pat 1	0	Split Demand Pat 2	0	Crossing Arterial Pat	0	

Split Pattern

Phase	1	2	3	4	5	6	7	8	9	10	11	12	13	14	15	16
Coord Phase		X				X										
Vehicle Recall		X				X										
Pedestrian Recall																
Recall to Max. Time																
Omit Phase									X	X	X	X	X	X	X	X
Special Funciton Outputs																

Coordinator Pattern # 31

Split Pattern	31	TS2 (Pat-Off)	10-1	Splits In	Percent
Cycle	100	Std (COS)	0	Offsets In	Percent
Offset Value	74%	Dwell/Add Time	0		
Actuated Coord	Yes	Timing Plan	0		
Actuated Walk Rest	No	Sequence	2		
Phase Reservice	No	Action Plan	0		
Max Select	MAXINH	Force Off	Float		

Split Preference Phases

Phase	1	2	3	4	5	6	7	8	9	10	11	12	13	14	15	16
Description																
Splits (Split Pat 31)	14	49	14	23	23	40	14	23	0	0	0	0	0	0	0	0
Pref 1	0	0	0	0	0	0	0	0	0	0	0	0	0	0	0	0
Pref 2	0	0	0	0	0	0	0	0	0	0	0	0	0	0	0	0

Ring	1	2	3	4
Ring Split Ext	0	0	0	0
Ring Displacement	-	0	0	0
Split Sum	100%	100%	0%	0%

Misc. Data

Veh Perm 1	0	Veh Perm 2	0	Veh Perm 2 Disp	0	
Split Demand Pat 1	0	Split Demand Pat 2	0	Crossing Arterial Pat	0	

Split Pattern

Phase	1	2	3	4	5	6	7	8	9	10	11	12	13	14	15	16
Coord Phase		X				X										
Vehicle Recall																
Pedestrian Recall																
Recall to Max. Time																
Omit Phase									X	X	X	X	X	X	X	X
Special Funciton Outputs																

Coordinator Pattern # 32

Split Pattern	32	TS2 (Pat-Off)	10-2	Splits In	Percent
Cycle	100	Std (COS)	0	Offsets In	Percent
Offset Value	94%	Dwell/Add Time	0		
Actuated Coord	Yes	Timing Plan	0		
Actuated Walk Rest	No	Sequence	2		
Phase Reservice	No	Action Plan	0		
Max Select	MAXINH	Force Off	Fixed		

Split Preference Phases

Phase	1	2	3	4	5	6	7	8	9	10	11	12	13	14	15	16
Description																

Splits (Split Pat 32)	14	49	20	17	22	41	20	17	0	0	0	0	0	0	0	0
Pref 1	0	0	0	0	0	0	0	0	0	0	0	0	0	0	0	0
Pref 2	0	0	0	0	0	0	0	0	0	0	0	0	0	0	0	0

Ring	1	2	3	4
Ring Split Ext	0	0	0	0
Ring Displacement	-	0	0	0
Split Sum	100%	100%	0%	0%

Misc. Data

Veh Perm 1	0	Veh Perm 2	0	Veh Perm 2 Disp	0	
Split Demand Pat 1	0	Split Demand Pat 2	0	Crossing Arterial Pat	0	

Split Pattern

Phase	1	2	3	4	5	6	7	8	9	10	11	12	13	14	15	16
Coord Phase		X				X										
Vehicle Recall		X				X										
Pedestrian Recall																
Recall to Max. Time																
Omit Phase									X	X	X	X	X	X	X	X
Special Funciton Outputs																

Coordinator Pattern # 33

Split Pattern	33	TS2 (Pat-Off)	10-3	Splits In	Percent
Cycle	100	Std (COS)	0	Offsets In	Percent
Offset Value	83%	Dwell/Add Time	0		
Actuated Coord	Yes	Timing Plan	0		
Actuated Walk Rest	No	Sequence	2		
Phase Reservice	No	Action Plan	0		
Max Select	MAXINH	Force Off	Float		

Split Preference Phases

Phase	1	2	3	4	5	6	7	8	9	10	11	12	13	14	15	16
Description																
Splits (Split Pat 33)	14	39	21	26	20	33	21	26	0	0	0	0	0	0	0	0
Pref 1	0	0	0	0	0	0	0	0	0	0	0	0	0	0	0	0
Pref 2	0	0	0	0	0	0	0	0	0	0	0	0	0	0	0	0

Ring	1	2	3	4
Ring Split Ext	0	0	0	0
Ring Displacement	-	0	0	0
Split Sum	100%	100%	0%	0%

Misc. Data

Veh Perm 1	0	Veh Perm 2	0	Veh Perm 2 Disp	0	
Split Demand Pat 1	0	Split Demand Pat 2	0	Crossing Arterial Pat	0	

Split Pattern

Phase	1	2	3	4	5	6	7	8	9	10	11	12	13	14	15	16
Coord Phase		X				X										
Vehicle Recall		X				X										
Pedestrian Recall																
Recall to Max. Time																
Omit Phase									X	X	X	X	X	X	X	X
Special Funciton Outputs																

Coordinator Pattern # 61

Split Pattern	61	TS2 (Pat-Off)	0-0	Splits In	Percent
Cycle	100	Std (COS)	0	Offsets In	Percent
Offset Value	68%	Dwell/Add Time	0		
Actuated Coord	Yes	Timing Plan	0		
Actuated Walk Rest	No	Sequence	11		
Phase Reservice	No	Action Plan	0		
Max Select	None	Force Off	None		

Split Preference Phases

Phase	1	2	3	4	5	6	7	8	9	10	11	12	13	14	15	16
Description																

Splits (Split Pat 61)	25	20	15	41	18	26	17	39	0	0	0	0	0	0	0	0
Pref 1	0	0	0	0	0	0	0	0	0	0	0	0	0	0	0	0
Pref 2	0	0	0	0	0	0	0	0	0	0	0	0	0	0	0	0

Ring	1	2	3	4
Ring Split Ext	0	0	0	0
Ring Displacement	-	0	0	0
Split Sum	101%	100%	0%	0%

Misc. Data

Veh Perm 1	0	Veh Perm 2	0	Veh Perm 2 Disp	0	
Split Demand Pat 1	0	Split Demand Pat 2	0	Crossing Arterial Pat	0	

Split Pattern

Phase	1	2	3	4	5	6	7	8	9	10	11	12	13	14	15	16
Coord Phase				X				X								
Vehicle Recall				X				X								
Pedestrian Recall																
Recall to Max. Time																
Omit Phase									X	X	X	X	X	X	X	X
Special Funciton Outputs																

Coordinator Pattern # 62

Split Pattern	62	TS2 (Pat-Off)	0-0	Splits In	Percent
Cycle	100	Std (COS)	0	Offsets In	Percent
Offset Value	90%	Dwell/Add Time	0		
Actuated Coord	Yes	Timing Plan	0		
Actuated Walk Rest	No	Sequence	11		
Phase Reservice	No	Action Plan	0		
Max Select	None	Force Off	None		

Split Preference Phases

Phase	1	2	3	4	5	6	7	8	9	10	11	12	13	14	15	16
Description																
Splits (Split Pat 62)	15	31	21	33	15	31	15	39	0	0	0	0	0	0	0	0
Pref 1	0	0	0	0	0	0	0	0	0	0	0	0	0	0	0	0
Pref 2	0	0	0	0	0	0	0	0	0	0	0	0	0	0	0	0

Ring	1	2	3	4
Ring Split Ext	0	0	0	0
Ring Displacement	-	0	0	0
Split Sum	100%	100%	0%	0%

Misc. Data

Veh Perm 1	0	Veh Perm 2	0	Veh Perm 2 Disp	0	
Split Demand Pat 1	0	Split Demand Pat 2	0	Crossing Arterial Pat	0	

Split Pattern

Phase	1	2	3	4	5	6	7	8	9	10	11	12	13	14	15	16
Coord Phase				X				X								
Vehicle Recall				X				X								
Pedestrian Recall																
Recall to Max. Time																
Omit Phase									X	X	X	X	X	X	X	X
Special Funciton Outputs																

Coordinator Pattern # 63

Split Pattern	63	TS2 (Pat-Off)	0-0	Splits In	Percent
Cycle	100	Std (COS)	0	Offsets In	Percent
Offset Value	59%	Dwell/Add Time	0		
Actuated Coord	Yes	Timing Plan	0		
Actuated Walk Rest	No	Sequence	11		
Phase Reservice	No	Action Plan	0		
Max Select	None	Force Off	None		

Split Preference Phases

Phase	1	2	3	4	5	6	7	8	9	10	11	12	13	14	15	16
Description																

Splits (Split Pat 63)	20	28	18	34	14	34	17	35	0	0	0	0	0	0	0	0
Pref 1	0	0	0	0	0	0	0	0	0	0	0	0	0	0	0	0
Pref 2	0	0	0	0	0	0	0	0	0	0	0	0	0	0	0	0

Ring	1	2	3	4
Ring Split Ext	0	11	0	0
Ring Displacement	-	0	0	0
Split Sum	100%	100%	0%	0%

Misc. Data

Veh Perm 1	0	Veh Perm 2	0	Veh Perm 2 Disp	0	
Split Demand Pat 1	0	Split Demand Pat 2	0	Crossing Arterial Pat	0	

Split Pattern

Phase	1	2	3	4	5	6	7	8	9	10	11	12	13	14	15	16
Coord Phase				X				X								
Vehicle Recall				X				X								
Pedestrian Recall																
Recall to Max. Time																
Omit Phase									X	X	X	X	X	X	X	X
Special Funciton Outputs																

Coordinator Pattern # 64

Split Pattern	64	TS2 (Pat-Off)	0-0	Splits In	Percent
Cycle	100	Std (COS)	0	Offsets In	Percent
Offset Value	20%	Dwell/Add Time	0		
Actuated Coord	Yes	Timing Plan	0		
Actuated Walk Rest	No	Sequence	11		
Phase Reservice	No	Action Plan	0		
Max Select	MAXINH	Force Off	Float		

Split Preference Phases

Phase	1	2	3	4	5	6	7	8	9	10	11	12	13	14	15	16
Description																
Splits (Split Pat 64)	15	20	31	34	15	20	20	45	0	0	0	0	0	0	0	0
Pref 1	0	0	0	0	0	0	0	0	0	0	0	0	0	0	0	0
Pref 2	0	0	0	0	0	0	0	0	0	0	0	0	0	0	0	0

Ring	1	2	3	4
Ring Split Ext	0	0	0	0
Ring Displacement	-	0	0	0
Split Sum	100%	100%	0%	0%

Misc. Data

Veh Perm 1	0	Veh Perm 2	0	Veh Perm 2 Disp	0
Split Demand Pat 1	0	Split Demand Pat 2	0	Crossing Arterial Pat	0

Split Pattern

Phase	1	2	3	4	5	6	7	8	9	10	11	12	13	14	15	16
Coord Phase				X				X								
Vehicle Recall				X				X								
Pedestrian Recall																
Recall to Max. Time																
Omit Phase									X	X	X	X	X	X	X	X
Special Funciton Outputs																

Ontario, CA

• ECOIMOLITE

MOVING TRAFFIC FORWARD

Milliken Ave @ Inland Empire Boulevard - 10.211.51.171 - ASC3 - Econolite Type - ASC/3

Coordination Split Pattern
Split Pattern Data (MM) 3-3

Split Pattern # 11

Phase	1	2	3	4	5	6	7	8	9	10	11	12	13	14	15	16
Description																
Split (percent)	15	50	20	15	15	50	20	15	0	0	0	0	0	0	0	0
Coord Phase		X				X										
Vehicle Recall		X				X										
Pedestrian Recall																
Recall to Max. Time																
Omit Phase									X	X	X	X	X	X	X	X

Ring	1	2	3	4
Split Sum	100%	100%	0%	0%

Split Pattern # 12

Phase	1	2	3	4	5	6	7	8	9	10	11	12	13	14	15	16
Description																
Split (percent)	15	50	10	25	10	55	10	25	0	0	0	0	0	0	0	0
Coord Phase		X				X										
Vehicle Recall		X				X										
Pedestrian Recall																
Recall to Max. Time																
Omit Phase									X	X	X	X	X	X	X	X

Ring	1	2	3	4
Split Sum	100%	100%	0%	0%

Split Pattern # 13

Phase	1	2	3	4	5	6	7	8	9	10	11	12	13	14	15	16
Description																
Split (percent)	20	35	9	36	20	35	9	36	0	0	0	0	0	0	0	0
Coord Phase		X				X										
Vehicle Recall		X				X										
Pedestrian Recall																
Recall to Max. Time																
Omit Phase									X	X	X	X	X	X	X	X

Ring	1	2	3	4
Split Sum	100%	100%	0%	0%

Split Pattern # 31

Phase	1	2	3	4	5	6	7	8	9	10	11	12	13	14	15	16
Description																
Split (percent)	14	49	14	23	23	40	14	23	0	0	0	0	0	0	0	0
Coord Phase		X				X										
Vehicle Recall																
Pedestrian Recall																
Recall to Max. Time																
Omit Phase									X	X	X	X	X	X	X	X

Ring	1	2	3	4
Split Sum	100%	100%	0%	0%

Split Pattern # 32

Phase	1	2	3	4	5	6	7	8	9	10	11	12	13	14	15	16
Description																
Split (percent)	14	49	20	17	22	41	20	17	0	0	0	0	0	0	0	0
Coord Phase		X				X										
Vehicle Recall		X				X										
Pedestrian Recall																
Recall to Max. Time																
Omit Phase									X	X	X	X	X	X	X	X

Ring	1	2	3	4
Split Sum	100%	100%	0%	0%

Split Pattern # 33

Phase	1	2	3	4	5	6	7	8	9	10	11	12	13	14	15	16
Description																
Split (percent)	14	39	21	26	20	33	21	26	0	0	0	0	0	0	0	0
Coord Phase		X				X										
Vehicle Recall		X				X										
Pedestrian Recall																
Recall to Max. Time																
Omit Phase									X	X	X	X	X	X	X	X

Ring	1	2	3	4
Split Sum	100%	100%	0%	0%

Split Pattern # 61

Phase	1	2	3	4	5	6	7	8	9	10	11	12	13	14	15	16
Description																
Split (percent)	25	20	15	41	18	26	17	39	0	0	0	0	0	0	0	0
Coord Phase				X				X								
Vehicle Recall				X				X								
Pedestrian Recall																
Recall to Max. Time																
Omit Phase									X	X	X	X	X	X	X	X

Ring	1	2	3	4
Split Sum	101%	100%	0%	0%

Split Pattern # 62

Phase	1	2	3	4	5	6	7	8	9	10	11	12	13	14	15	16
Description																
Split (percent)	15	31	21	33	15	31	15	39	0	0	0	0	0	0	0	0
Coord Phase				X				X								
Vehicle Recall				X				X								
Pedestrian Recall																
Recall to Max. Time																
Omit Phase									X	X	X	X	X	X	X	X

Ring	1	2	3	4
Split Sum	100%	100%	0%	0%

Split Pattern # 63

Phase	1	2	3	4	5	6	7	8	9	10	11	12	13	14	15	16
Description																
Split (percent)	20	28	18	34	14	34	17	35	0	0	0	0	0	0	0	0
Coord Phase				X				X								
Vehicle Recall				X				X								
Pedestrian Recall																
Recall to Max. Time																
Omit Phase									X	X	X	X	X	X	X	X

Ring	1	2	3	4
Split Sum	100%	100%	0%	0%

Split Pattern # 64

Phase	1	2	3	4	5	6	7	8	9	10	11	12	13	14	15	16
Description																
Split (percent)	15	20	31	34	15	20	20	45	0	0	0	0	0	0	0	0
Coord Phase				X				X								
Vehicle Recall				X				X								
Pedestrian Recall																

Recall to Max. Time																
Omit Phase									X	X	X	X	X	X	X	X

Ring	1	2	3	4
Split Sum	100%	100%	0%	0%

Ontario, CA

- ECOIMOLITE

MOVING TRAFFIC FORWARD

Milliken Ave @ Inland Empire Boulevard - 10.211.51.171 - ASC3 - Econolite Type - ASC/3

Preempt Plan

Preempt Plan (MM) 4-1

Preempt Plan 3

Phase	1	2	3	4	5	6	7	8	9	10	11	12	13	14	15	16
Overlap	A	B	C	D	E	F	G	H	I	J	K	L	M	N	O	P
Trk Clr Veh	.	.	.	.	.	.	.	.	.	.	.	.	.	.	.	.
Trk Clr Overlap	.	.	.	.	.	.	.	.	.	.	.	.	.	.	.	.
Enable Trailing																
Dwell Veh	.	X	.	.	X	.	.	.	.	.	.	.	.	.	.	.
Dwell Ped																
Dwell Overlap	.	.	.	.	.	.	.	.	.	.	.	.	.	.	.	.
Cycling Veh	.	.	.	.	.	.	.	.	.	.	.	.	.	.	.	.
Cycling Ped																
Cycling Overlap	.	.	.	.	.	.	.	.	.	.	.	.	.	.	.	.
Exit Phases		X			X											
Exit Calls																
Special Function																

Enable	Yes	Preempt Override	Yes	Interlock Enable	No
Det Lock	Yes	Delay	0	Inhibit	0
Override Flash	No	Duration	0	CLR > GRN	No
Term Ovlp Asap	No	PC Through Yel	No	Terminate Phase	No
Ped Dark	No	Track Clear Rsrv	No	Dwell Flash	Off
Linked Pmt	0	FL Exit Color	Grn	Exit Options	Off
Exit Timing Plan	0	Reservice	0	Fault Type	Hard

Ring	1	2	3	4
Free During Pmt	No	No	No	No

Timing	Walk	Ped Clr	Min Grn	Yellow	Red
Entrance	0	255	5	4.0	1.0
	Min Grn	**Ext Grn**	**Max Grn**	**Yellow**	**Red**
Track Clear	0	0	0	4.0	1.0
	Min Dwell	**Pmt Ext**	**Max Time**	**Yellow**	**Red**
Dwell / Cycle-Exit	0	0.0	0	4.0	1.0

Preemption Active Out	On	Preempt Act Dwell	No
Other - Priority Preempt	Off	Non-Priority Pmt	Off
Inhibit Extension Time	0.0	Ped Priority Return	Off
Veh Priority Return	Off	Queue Delay	Off
Conditional Delay	Off		

Phase	1	2	3	4	5	6	7	8	9	10	11	12	13	14	15	16
Veh Pri Return %	0	0	0	0	0	0	0	0	0	0	0	0	0	0	0	0

Preempt Plan 4

Phase	1	2	3	4	5	6	7	8	9	10	11	12	13	14	15	16
Overlap	**A**	**B**	**C**	**D**	**E**	**F**	**G**	**H**	**I**	**J**	**K**	**L**	**M**	**N**	**O**	**P**
Trk Clr Veh	.	.	.	.	.	.	.	.	.	.	.	.	.	.	.	.
Trk Clr Overlap	.	.	.	.	.	.	.	.	.	.	.	.	.	.	.	.
Enable Trailing																
Dwell Veh	X	.	.	.	.	X	.	.	.	.	.	.	.	.	.	.
Dwell Ped																
Dwell Overlap	.	.	.	.	.	.	.	.	.	.	.	.	.	.	.	.
Cycling Veh	.	.	.	.	.	.	.	.	.	.	.	.	.	.	.	.
Cycling Ped																
Cycling Overlap	.	.	.	.	.	.	.	.	.	.	.	.	.	.	.	.
Exit Phases	X					X										
Exit Calls																
Special Function																

Enable	Yes	Preempt Override	Yes	Interlock Enable	No
Det Lock	Yes	Delay	0	Inhibit	0
Override Flash	No	Duration	0	CLR > GRN	No
Term Ovlp Asap	No	PC Through Yel	No	Terminate Phase	No
Ped Dark	No	Track Clear Rsrv	No	Dwell Flash	Off
Linked Pmt	0	FL Exit Color	Grn	Exit Options	Off
Exit Timing Plan	0	Reservice	0	Fault Type	Hard

Ring	1	2	3	4
Free During Pmt	No	No	No	No

Timing	Walk	Ped Clr	Min Grn	Yellow	Red
Entrance	0	255	5	4.0	1.0
	Min Grn	**Ext Grn**	**Max Grn**	**Yellow**	**Red**
Track Clear	0	0	0	4.0	1.0
	Min Dwell	**Pmt Ext**	**Max Time**	**Yellow**	**Red**

Dwell / Cycle-Exit	0	0.0	0	4.0	1.0

Preemption Active Out	On	Preempt Act Dwell	No
Other - Priority Preempt	Off	Non-Priority Pmt	Off
Inhibit Extension Time	0.0	Ped Priority Return	Off
Veh Priority Return	Off	Queue Delay	Off
Conditional Delay	Off		

Phase	**1**	**2**	**3**	**4**	**5**	**6**	**7**	**8**	**9**	**10**	**11**	**12**	**13**	**14**	**15**	**16**
Veh Pri Return %	0	0	0	0	0	0	0	0	0	0	0	0	0	0	0	0

Preempt Plan 5

Phase	**1**	**2**	**3**	**4**	**5**	**6**	**7**	**8**	**9**	**10**	**11**	**12**	**13**	**14**	**15**	**16**
Overlap	**A**	**B**	**C**	**D**	**E**	**F**	**G**	**H**	**I**	**J**	**K**	**L**	**M**	**N**	**O**	**P**
Trk Clr Veh	.	.	.	.	.	.	.	.	.	.	.	.	.	.	.	.
Trk Clr Overlap	.	.	.	.	.	.	.	.	.	.	.	.	.	.	.	.
Enable Trailing																
Dwell Veh	.	.	.	X	.	.	X	.	.	.	.	.	.	.	.	.
Dwell Ped																
Dwell Overlap	.	.	.	.	.	.	.	.	.	.	.	.	.	.	.	.
Cycling Veh	.	.	.	.	.	.	.	.	.	.	.	.	.	.	.	.
Cycling Ped																
Cycling Overlap	.	.	.	.	.	.	.	.	.	.	.	.	.	.	.	.
Exit Phases				X			X									
Exit Calls																
Special Function																

Enable	Yes	Preempt Override	Yes	Interlock Enable	No
Det Lock	Yes	Delay	0	Inhibit	0
Override Flash	No	Duration	0	CLR > GRN	No
Term Ovlp Asap	No	PC Through Yel	No	Terminate Phase	No
Ped Dark	No	Track Clear Rsrv	No	Dwell Flash	Off
Linked Pmt	0	FL Exit Color	Grn	Exit Options	Off
Exit Timing Plan	0	Reservice	0	Fault Type	Hard

Ring	**1**	**2**	**3**	**4**
Free During Pmt	No	No	No	No

Timing	**Walk**	**Ped Clr**	**Min Grn**	**Yellow**	**Red**
Entrance	0	255	5	4.0	1.0
	Min Grn	**Ext Grn**	**Max Grn**	**Yellow**	**Red**
Track Clear	0	0	0	4.0	1.0
				Yellow	**Red**

	Min Dwell	Pmt Ext	Max Time		
Dwell / Cycle-Exit	0	0.0	0	4.0	1.0

Preemption Active Out	On	Preempt Act Dwell	No
Other - Priority Preempt	Off	Non-Priority Pmt	Off
Inhibit Extension Time	0.0	Ped Priority Return	Off
Veh Priority Return	Off	Queue Delay	Off
Conditional Delay	Off		

Phase	1	2	3	4	5	6	7	8	9	10	11	12	13	14	15	16
Veh Pri Return %	0	0	0	0	0	0	0	0	0	0	0	0	0	0	0	0

Preempt Plan 6

Phase	1	2	3	4	5	6	7	8	9	10	11	12	13	14	15	16
Overlap	A	B	C	D	E	F	G	H	I	J	K	L	M	N	O	P
Trk Clr Veh	.	.	.	.	.	.	.	.	.	.	.	.	.	.	.	.
Trk Clr Overlap	.	.	.	.	.	.	.	.	.	.	.	.	.	.	.	.
Enable Trailing																
Dwell Veh	.	.	X	.	.	.	.	X	.	.	.	.	.	.	.	.
Dwell Ped																
Dwell Overlap	.	.	.	.	.	.	.	.	.	.	.	.	.	.	.	.
Cycling Veh	.	.	.	.	.	.	.	.	.	.	.	.	.	.	.	.
Cycling Ped																
Cycling Overlap	.	.	.	.	.	.	.	.	.	.	.	.	.	.	.	.
Exit Phases			X					X								
Exit Calls																
Special Function																

Enable	Yes	Preempt Override	Yes	Interlock Enable	No
Det Lock	Yes	Delay	0	Inhibit	0
Override Flash	No	Duration	0	CLR > GRN	No
Term Ovlp Asap	No	PC Through Yel	No	Terminate Phase	No
Ped Dark	No	Track Clear Rsrv	No	Dwell Flash	Off
Linked Pmt	0	FL Exit Color	Grn	Exit Options	Off
Exit Timing Plan	0	Reservice	0	Fault Type	Hard

Ring	1	2	3	4
Free During Pmt	No	No	No	No

Timing	Walk	Ped Clr	Min Grn	Yellow	Red
Entrance	0	255	5	4.0	1.0
	Min Grn	Ext Grn	Max Grn	Yellow	Red

Track Clear	0	0	0	4.0	1.0
	Min Dwell	**Pmt Ext**	**Max Time**	**Yellow**	**Red**
Dwell / Cycle-Exit	0	0.0	0	4.0	1.0

Preemption Active Out	On	Preempt Act Dwell	No
Other - Priority Preempt	Off	Non-Priority Pmt	Off
Inhibit Extension Time	0.0	Ped Priority Return	Off
Veh Priority Return	Off	Queue Delay	Off
Conditional Delay	Off		

Phase	**1**	**2**	**3**	**4**	**5**	**6**	**7**	**8**	**9**	**10**	**11**	**12**	**13**	**14**	**15**	**16**
Veh Pri Return %	0	0	0	0	0	0	0	0	0	0	0	0	0	0	0	0

Ontario, CA

ECONOLITE

MOVING TRAFFIC FORWARD

Milliken Ave @ Inland Empire Boulevard - 10.211.51.171 - ASC3 - Econolite Type - ASC/3

Preempt Preempt Filtering
Enable Preempt Filtering & TSP/SCP (MM) 4-2

Input	Solid	Pulsing
1	...BYPASSED...	...BYPASSED...
2	...BYPASSED...	...BYPASSED...
3	PREEMPTION 3	PREEMPTION 7
4	PREEMPTION 4	PREEMPTION 8
5	PREEMPTION 5	PREEMPTION 9
6	PREEMPTION 6	PREEMPTION 10
7	...BYPASSED...	...BYPASSED...
8	...BYPASSED...	...BYPASSED...
9	...BYPASSED...	...BYPASSED...
10	...BYPASSED...	...BYPASSED...

Ontario, CA

- ECOIMOLITE

MOVING TRAFFIC FORWARD

Milliken Ave @ Inland Empire Boulevard - 10.211.51.171 - ASC3 - Econolite Type - ASC/3

Preempt TSP/SCP Plan and Split

TSP / SCP Plan (MM) 4-3

TSP/SCP Plan	Enable Option	Signal Type	Det Lock	Delay Time	Max Presence	PMT Enables Reservice	No Delay in TSP	Action SF Inhibit	Reservice Cycles	Bus Heading
1	No	Solid	No	0	0	No	False	0	0	NB
2	No	Solid	No	0	0	No	False	0	0	SB
3	No	Solid	No	0	0	No	False	0	0	EB
4	No	Solid	No	0	0	No	False	0	0	WB
5	No	Solid	No	0	0	No	False	0	0	.
6	No	Solid	No	0	0	No	False	0	0	.

Mode: TSP
Free Default Pattern: 120
Headway Allowance: 0

TSP/SCP Plan	1	2	3	4	5	6	7	8	9	10	11	12	13	14	15	16
1	.	.	.	.	.	.	.	.	.	.	.	.	.	.	.	.
2	.	.	.	.	.	.	.	.	.	.	.	.	.	.	.	.
3	.	.	.	.	.	.	.	.	.	.	.	.	.	.	.	.
4	.	.	.	.	.	.	.	.	.	.	.	.	.	.	.	.
5	.	.	.	.	.	.	.	.	.	.	.	.	.	.	.	.
6	.	.	.	.	.	.	.	.	.	.	.	.	.	.	.	.

TSP / SCP Split Pattern (MM) 4-4

TSP/SCP Split Pattern	Max Type	Phase															
		1	2	3	4	5	6	7	8	9	10	11	12	13	14	15	16
4	Max Reduction	255	255	255	255	255	255	255	255	255	255	255	255	255	255	255	255

Ontario, CA

ECONOLITE

MOVING TRAFFIC FORWARD

Milliken Ave @ Inland Empire Boulevard - 10.211.51.171 - ASC3 - Econolite Type - ASC/3

Time Base Clock/Calendar

Clock/Calendar Data (MM) 5-1

Manual Action Plan:	0
SYNC Reference Time:	00:00
SYNC Reference:	Reference Time
Day Light Savings:	No
Time Reset Input Set Time:	3:30:00
Standard Time From GMT:	0

Ontario, CA

- ECOIMOLITE

MOVING TRAFFIC FORWARD

Milliken Ave @ Inland Empire Boulevard - 10.211.51.171 - ASC3 - Econolite Type - ASC/3

Time Base Action Plan
Action Plan (MM) 5-2

Action Plan - 1

Pattern	Free	Override Sys	Yes
Timing Plan	0	Sequence	1
Veh Detector Plan	0	Det Log	None
Flash	No	Red Rest	No
Veh Det Diag Plan	0	Ped Det Diag Plan	0
Dimming Enable	No	Pmt Veh Priority Ret	No
Pmt Ped Priority Ret	No	Pmt Queue Delay	No
Pmt Cond Delay	No		

Phase	1	2	3	4	5	6	7	8	9	10	11	12	13	14	15	16
Ped Recall																
Walk 2																
Veh Ext 2																
Veh Recall																
Max Recall																
Max 2																
Max 3																
CS Inhibit																
Omit																
Spec Func (1-8)																
Aux Func (1-3)																

	1	2	3	4	5	6	7	8	9	10	11	12	13	14	15
LP 1-15	.	.	.	.	.	.	.	.	.	.	.	.	.	.	.
LP 16-30	.	.	.	.	.	.	.	.	.	.	.	.	.	.	.
LP 31-45	.	.	.	.	.	.	.	.	.	.	.	.	.	.	.
LP 46-60	.	.	.	.	.	.	.	.	.	.	.	.	.	.	.
LP 61-75	.	.	.	.	.	.	.	.	.	.	.	.	.	.	.
LP 76-90	.	.	.	.	.	.	.	.	.	.	.	.	.	.	.
LP 91-100	.	.	.	.	.	.	.	.	.	.					

Action Plan - 11

Pattern	11	Override Sys	No
Timing Plan	0	Sequence	3
Veh Detector Plan	0	Det Log	None
Flash	No	Red Rest	No
Veh Det Diag Plan	0	Ped Det Diag Plan	0
Dimming Enable	No	Pmt Veh Priority Ret	No
Pmt Ped Priority Ret	No	Pmt Queue Delay	No
Pmt Cond Delay	No		

Phase	1	2	3	4	5	6	7	8	9	10	11	12	13	14	15	16
Ped Recall																
Walk 2																
Veh Ext 2																
Veh Recall		X				X										
Max Recall																
Max 2																
Max 3																
CS Inhibit																
Omit																

Spec Func (1-8)								

Aux Func (1-3)			

	1	2	3	4	5	6	7	8	9	10	11	12	13	14	15
LP 1-15	.	.	.	.	.	.	.	.	.	.	.	.	.	.	.
LP 16-30	.	.	.	.	.	.	.	.	.	.	.	.	.	.	.
LP 31-45	.	.	.	.	.	.	.	.	.	.	.	.	.	.	.
LP 46-60	.	.	.	.	.	.	.	.	.	.	.	.	.	.	.
LP 61-75	.	.	.	.	.	.	.	.	.	.	.	.	.	.	.
LP 76-90	.	.	.	.	.	.	.	.	.	.	.	.	.	.	.
LP 91-100	.	.	.	.	.	.	.	.	.	.					

Action Plan - 12

Pattern	12	Override Sys	No
Timing Plan	0	Sequence	3
Veh Detector Plan	0	Det Log	None
Flash	No	Red Rest	No
Veh Det Diag Plan	0	Ped Det Diag Plan	0
Dimming Enable	No	Pmt Veh Priority Ret	No
Pmt Ped Priority Ret	No	Pmt Queue Delay	No
Pmt Cond Delay	No		

Phase	1	2	3	4	5	6	7	8	9	10	11	12	13	14	15	16
Ped Recall																
Walk 2																

Phase	1	2	3	4	5	6	7	8	9	10	11	12	13	14	15	16
Veh Ext 2																
Veh Recall		X				X										
Max Recall																
Max 2																
Max 3																
CS Inhibit																
Omit																

Spec Func (1-8)								

Aux Func (1-3)			

	1	2	3	4	5	6	7	8	9	10	11	12	13	14	15
LP 1-15	.	.	.	.	.	.	.	.	.	.	.	.	.	.	.
LP 16-30	.	.	.	.	.	.	.	.	.	.	.	.	.	.	.
LP 31-45	.	.	.	.	.	.	.	.	.	.	.	.	.	.	.
LP 46-60	.	.	.	.	.	.	.	.	.	.	.	.	.	.	.
LP 61-75	.	.	.	.	.	.	.	.	.	.	.	.	.	.	.
LP 76-90	.	.	.	.	.	.	.	.	.	.	.	.	.	.	.
LP 91-100	.	.	.	.	.	.	.	.	.	.					

Action Plan - 13

Pattern	13	Override Sys	No
Timing Plan	0	Sequence	0
Veh Detector Plan	0	Det Log	None
Flash	No	Red Rest	No
Veh Det Diag Plan	0	Ped Det Diag Plan	0
Dimming Enable	No	Pmt Veh Priority Ret	No
Pmt Ped Priority Ret	No	Pmt Queue Delay	No
Pmt Cond Delay	No		

Phase	1	2	3	4	5	6	7	8	9	10	11	12	13	14	15	16
Ped Recall																
Walk 2																
Veh Ext 2																
Veh Recall																
Max Recall																
Max 2																
Max 3																
CS Inhibit																
Omit																

Spec Func (1-8)								

Aux Func (1-3)			

	1	2	3	4	5	6	7	8	9	10	11	12	13	14	15
LP 1-15	.	.	.	.	.	.	.	.	.	.	.	.	.	.	.
LP 16-30	.	.	.	.	.	.	.	.	.	.	.	.	.	.	.
LP 31-45	.	.	.	.	.	.	.	.	.	.	.	.	.	.	.
LP 46-60	.	.	.	.	.	.	.	.	.	.	.	.	.	.	.
LP 61-75	.	.	.	.	.	.	.	.	.	.	.	.	.	.	.
LP 76-90	.	.	.	.	.	.	.	.	.	.	.	.	.	.	.
LP 91-100	.	.	.	.	.	.	.	.	.	.					

Action Plan - 31

Pattern	31	Override Sys	No
Timing Plan	0	Sequence	2
Veh Detector Plan	0	Det Log	None
Flash	No	Red Rest	No
Veh Det Diag Plan	0	Ped Det Diag Plan	0
Dimming Enable	No	Pmt Veh Priority Ret	No
Pmt Ped Priority Ret	No	Pmt Queue Delay	No
Pmt Cond Delay	No		

Phase	1	2	3	4	5	6	7	8	9	10	11	12	13	14	15	16
Ped Recall																
Walk 2																

Phase	1	2	3	4	5	6	7	8	9	10	11	12	13	14	15	16
Veh Ext 2																
Veh Recall																
Max Recall																
Max 2																
Max 3																
CS Inhibit																
Omit																

Spec Func (1-8)								

Aux Func (1-3)			

	1	2	3	4	5	6	7	8	9	10	11	12	13	14	15
LP 1-15	.	.	.	.	.	.	.	.	.	.	.	.	.	.	.
LP 16-30	.	.	.	.	.	.	.	.	.	.	.	.	.	.	.
LP 31-45	.	.	.	.	.	.	.	.	.	.	.	.	.	.	.
LP 46-60	.	.	.	.	.	.	.	.	.	.	.	.	.	.	.
LP 61-75	.	.	.	.	.	.	.	.	.	.	.	.	.	.	.
LP 76-90	.	.	.	.	.	.	.	.	.	.	.	.	.	.	.
LP 91-100	.	.	.	.	.	.	.	.	.	.					

Action Plan - 32

Pattern	32	Override Sys	No
Timing Plan	0	Sequence	2
Veh Detector Plan	0	Det Log	None
Flash	No	Red Rest	No
Veh Det Diag Plan	0	Ped Det Diag Plan	0
Dimming Enable	No	Pmt Veh Priority Ret	No
Pmt Ped Priority Ret	No	Pmt Queue Delay	No
Pmt Cond Delay	No		

Phase	1	2	3	4	5	6	7	8	9	10	11	12	13	14	15	16
Ped Recall																
Walk 2																
Veh Ext 2																
Veh Recall																
Max Recall																
Max 2																
Max 3																
CS Inhibit																
Omit																

Spec Func (1-8)								

Aux Func (1-3)			

	1	2	3	4	5	6	7	8	9	10	11	12	13	14	15
LP 1-15	.	.	.	.	.	.	.	.	.	.	.	.	.	.	.
LP 16-30	.	.	.	.	.	.	.	.	.	.	.	.	.	.	.
LP 31-45	.	.	.	.	.	.	.	.	.	.	.	.	.	.	.
LP 46-60	.	.	.	.	.	.	.	.	.	.	.	.	.	.	.
LP 61-75	.	.	.	.	.	.	.	.	.	.	.	.	.	.	.
LP 76-90	.	.	.	.	.	.	.	.	.	.	.	.	.	.	.
LP 91-100	.	.	.	.	.	.	.	.	.	.					

Action Plan - 33

Pattern	33	Override Sys	No
Timing Plan	0	Sequence	2
Veh Detector Plan	0	Det Log	None
Flash	No	Red Rest	No
Veh Det Diag Plan	0	Ped Det Diag Plan	0
Dimming Enable	No	Pmt Veh Priority Ret	No
Pmt Ped Priority Ret	No	Pmt Queue Delay	No
Pmt Cond Delay	No		

Phase	1	2	3	4	5	6	7	8	9	10	11	12	13	14	15	16
Ped Recall																
Walk 2																

Phase	1	2	3	4	5	6	7	8	9	10	11	12	13	14	15	16
Veh Ext 2																
Veh Recall																
Max Recall																
Max 2																
Max 3																
CS Inhibit																
Omit																

Spec Func (1-8)								

Aux Func (1-3)			

	1	2	3	4	5	6	7	8	9	10	11	12	13	14	15
LP 1-15	.	.	.	.	.	.	.	.	.	.	.	.	.	.	.
LP 16-30	.	.	.	.	.	.	.	.	.	.	.	.	.	.	.
LP 31-45	.	.	.	.	.	.	.	.	.	.	.	.	.	.	.
LP 46-60	.	.	.	.	.	.	.	.	.	.	.	.	.	.	.
LP 61-75	.	.	.	.	.	.	.	.	.	.	.	.	.	.	.
LP 76-90	.	.	.	.	.	.	.	.	.	.	.	.	.	.	.
LP 91-100	.	.	.	.	.	.	.	.	.	.					

Action Plan - 61

Pattern	61	Override Sys	No
Timing Plan	0	Sequence	11
Veh Detector Plan	0	Det Log	None
Flash	No	Red Rest	No
Veh Det Diag Plan	0	Ped Det Diag Plan	0
Dimming Enable	No	Pmt Veh Priority Ret	No
Pmt Ped Priority Ret	No	Pmt Queue Delay	No
Pmt Cond Delay	No		

Phase	1	2	3	4	5	6	7	8	9	10	11	12	13	14	15	16
Ped Recall																
Walk 2																
Veh Ext 2																
Veh Recall																
Max Recall																
Max 2																
Max 3																
CS Inhibit																
Omit																

Spec Func (1-8)								

Aux Func (1-3)			

	1	2	3	4	5	6	7	8	9	10	11	12	13	14	15
LP 1-15	.	.	.	.	.	.	.	.	.	.	.	.	.	.	.
LP 16-30	.	.	.	.	.	.	.	.	.	.	.	.	.	.	.
LP 31-45	.	.	.	.	.	.	.	.	.	.	.	.	.	.	.
LP 46-60	.	.	.	.	.	.	.	.	.	.	.	.	.	.	.
LP 61-75	.	.	.	.	.	.	.	.	.	.	.	.	.	.	.
LP 76-90	.	.	.	.	.	.	.	.	.	.	.	.	.	.	.
LP 91-100	.	.	.	.	.	.	.	.	.	.					

Action Plan - 62

Pattern	62	Override Sys	No
Timing Plan	0	Sequence	11
Veh Detector Plan	0	Det Log	None
Flash	No	Red Rest	No
Veh Det Diag Plan	0	Ped Det Diag Plan	0
Dimming Enable	No	Pmt Veh Priority Ret	No
Pmt Ped Priority Ret	No	Pmt Queue Delay	No
Pmt Cond Delay	No		

Phase	1	2	3	4	5	6	7	8	9	10	11	12	13	14	15	16
Ped Recall																
Walk 2																

Phase	1	2	3	4	5	6	7	8	9	10	11	12	13	14	15	16
Veh Ext 2																
Veh Recall																
Max Recall																
Max 2																
Max 3																
CS Inhibit																
Omit																
Spec Func (1-8)																
Aux Func (1-3)																

	1	2	3	4	5	6	7	8	9	10	11	12	13	14	15
LP 1-15	.	.	.	.	.	.	.	.	.	.	.	.	.	.	.
LP 16-30	.	.	.	.	.	.	.	.	.	.	.	.	.	.	.
LP 31-45	.	.	.	.	.	.	.	.	.	.	.	.	.	.	.
LP 46-60	.	.	.	.	.	.	.	.	.	.	.	.	.	.	.
LP 61-75	.	.	.	.	.	.	.	.	.	.	.	.	.	.	.
LP 76-90	.	.	.	.	.	.	.	.	.	.	.	.	.	.	.
LP 91-100	.	.	.	.	.	.	.	.	.	.					

Action Plan - 63

Pattern	63	Override Sys	No
Timing Plan	0	Sequence	11
Veh Detector Plan	0	Det Log	None
Flash	No	Red Rest	No
Veh Det Diag Plan	0	Ped Det Diag Plan	0
Dimming Enable	No	Pmt Veh Priority Ret	No
Pmt Ped Priority Ret	No	Pmt Queue Delay	No
Pmt Cond Delay	No		

Phase	1	2	3	4	5	6	7	8	9	10	11	12	13	14	15	16
Ped Recall																
Walk 2																
Veh Ext 2																
Veh Recall																
Max Recall																
Max 2																
Max 3																
CS Inhibit																
Omit																

Spec Func (1-8)								

Aux Func (1-3)			

	1	2	3	4	5	6	7	8	9	10	11	12	13	14	15
LP 1-15	.	.	.	.	.	.	.	.	.	.	.	.	.	.	.
LP 16-30	.	.	.	.	.	.	.	.	.	.	.	.	.	.	.
LP 31-45	.	.	.	.	.	.	.	.	.	.	.	.	.	.	.
LP 46-60	.	.	.	.	.	.	.	.	.	.	.	.	.	.	.
LP 61-75	.	.	.	.	.	.	.	.	.	.	.	.	.	.	.
LP 76-90	.	.	.	.	.	.	.	.	.	.	.	.	.	.	.
LP 91-100	.	.	.	.	.	.	.	.	.	.					

Action Plan - 64

Pattern	64	Override Sys	No
Timing Plan	0	Sequence	11
Veh Detector Plan	0	Det Log	None
Flash	No	Red Rest	No
Veh Det Diag Plan	0	Ped Det Diag Plan	0
Dimming Enable	No	Pmt Veh Priority Ret	No
Pmt Ped Priority Ret	No	Pmt Queue Delay	No
Pmt Cond Delay	No		

Phase	1	2	3	4	5	6	7	8	9	10	11	12	13	14	15	16
Ped Recall																
Walk 2																

Phase	1	2	3	4	5	6	7	8	9	10	11	12	13	14	15	16
Veh Ext 2																
Veh Recall																
Max Recall																
Max 2																
Max 3																
CS Inhibit																
Omit																

Spec Func (1-8)								

Aux Func (1-3)			

	1	2	3	4	5	6	7	8	9	10	11	12	13	14	15
LP 1-15	.	.	.	.	.	.	.	.	.	.	.	.	.	.	.
LP 16-30	.	.	.	.	.	.	.	.	.	.	.	.	.	.	.
LP 31-45	.	.	.	.	.	.	.	.	.	.	.	.	.	.	.
LP 46-60	.	.	.	.	.	.	.	.	.	.	.	.	.	.	.
LP 61-75	.	.	.	.	.	.	.	.	.	.	.	.	.	.	.
LP 76-90	.	.	.	.	.	.	.	.	.	.	.	.	.	.	.
LP 91-100	.	.	.	.	.	.	.	.	.	.					

Action Plan - 99

Pattern	99	Override Sys	No
Timing Plan	1	Sequence	1
Veh Detector Plan	0	Det Log	None
Flash	No	Red Rest	No
Veh Det Diag Plan	0	Ped Det Diag Plan	0
Dimming Enable	No	Pmt Veh Priority Ret	No
Pmt Ped Priority Ret	No	Pmt Queue Delay	No
Pmt Cond Delay	No		

Phase	1	2	3	4	5	6	7	8	9	10	11	12	13	14	15	16
Ped Recall																
Walk 2																
Veh Ext 2																
Veh Recall		X				X										
Max Recall																
Max 2																
Max 3																
CS Inhibit																
Omit																

Spec Func (1-8)								

Aux Func (1-3)			

	1	2	3	4	5	6	7	8	9	10	11	12	13	14	15
LP 1-15	.	.	.	.	.	.	.	.	.	.	.	.	.	.	.
LP 16-30	.	.	.	.	.	.	.	.	.	.	.	.	.	.	.
LP 31-45	.	.	.	.	.	.	.	.	.	.	.	.	.	.	.
LP 46-60	.	.	.	.	.	.	.	.	.	.	.	.	.	.	.
LP 61-75	.	.	.	.	.	.	.	.	.	.	.	.	.	.	.
LP 76-90	.	.	.	.	.	.	.	.	.	.	.	.	.	.	.
LP 91-100	.	.	.	.	.	.	.	.	.	.					

Ontario, CA

ECONOLITE

MOVING TRAFFIC FORWARD

Milliken Ave @ Inland Empire Boulevard - 10.211.51.171 - ASC3 - Econolite Type - ASC/3

Time Base Day Plan/Schedule
Day Plan (MM) 5-3

Day Plan #1

Event	Action Plan	Start Time
1	99	00:00
2	31	06:00
3	32	10:00
4	33	15:00
5	99	20:00

Day Plan #2

Event	Action Plan	Start Time
1	99	00:00
2	11	10:00
3	99	20:00

Schedule (MM) 5-4

Schedule Number - 1

Day Plan No.: 1

Month	JAN	FEB	MAR	APR	MAY	JUN	JUL	AUG	SEP	OCT	NOV	DEC
	X	X	X	X	X	X	X	X	X	X	X	X

Day (DOW)	SUN	MON	TUE	WED	THU	FRI	SAT
		X	X	X	X	X	

Day (DOM)	1	2	3	4	5	6	7	8	9	10	11
	X	X	X	X	X	X	X	X	X	X	X
	12	**13**	**14**	**15**	**16**	**17**	**18**	**19**	**20**	**21**	**22**
	X	X	X	X	X	X	X	X	X	X	X
	23	**24**	**25**	**26**	**27**	**28**	**29**	**30**	**31**		
	X	X	X	X	X	X	X	X	X		

Schedule Number - 2

Day Plan No.: 2

Month	JAN	FEB	MAR	APR	MAY	JUN	JUL	AUG	SEP	OCT	NOV	DEC
	X	X	X	X	X	X	X	X	X	X	X	X

Day (DOW)	SUN	MON	TUE	WED	THU	FRI	SAT
	X						X

Day (DOM)	1	2	3	4	5	6	7	8	9	10	11
	X	X	X	X	X	X	X	X	X	X	X
	12	**13**	**14**	**15**	**16**	**17**	**18**	**19**	**20**	**21**	**22**
	X	X	X	X	X	X	X	X	X	X	X
	23	**24**	**25**	**26**	**27**	**28**	**29**	**30**	**31**		
	X	X	X	X	X	X	X	X	X		

Ontario, CA

ECONOLITE

MOVING TRAFFIC FORWARD

Milliken Ave @ Inland Empire Boulevard - 10.211.51.171 - ASC3 - Econolite Type - ASC/3

Time Base Exceptions

Exception Day Program (MM) 5-5

Excep Day	Float/Fixed	Mon/Mon	DOW/DOM	WOM/Year	Day Plan

Ontario, CA

ECONOLITE

MOVING TRAFFIC FORWARD

Milliken Ave @ Inland Empire Boulevard - 10.211.51.171 - ASC3 - Econolite Type - ASC/3

Detectors

Detectors - Pg 1

Veh Det Phase Assignment (MM) 6-1

Vehicle Detector Plan Number - 1

Veh Detector	Assigned Phase	Called Phase	Type
1	1	1	N
2	2	2	N
3	3	3	N
4	4	4	N
5	5	5	N
6	6	6	N
7	7	7	N
8	8	8	N
9	0	1	N
10	2	2	N
12	4	4	N
14	6	6	N
16	8	8	N
21	5		N
22	6		N
23	7		N
24	8		N

Vehicle Detector Plan Number - 2

Veh Detector	Assigned Phase	Called Phase	Type
1	1		N
2	2		N
3	3		N
4	4		N
5	5		N
6	6		N
7	7		N
8	8		N
9	9		N
10	10		N
11	11		N
12	12		N
13	13		N
14	14		N
15	15		N
16	16		N

Vehicle Detector Plan Number - 3

Veh Detector	Assigned Phase	Called Phase	Type
1	1		N
2	2		N
3	3		N
4	4		N
5	5		N
6	6		N
7	7		N
8	8		N
9	9		N
10	10		N
11	11		N
12	12		N
13	13		N
14	14		N
15	15		N
16	16		N

Vehicle Detector Plan Number - 4

Veh Detector	Assigned Phase	Called Phase	Type
1	1		N
2	2		N
3	3		N
4	4		N
5	5		N
6	6		N
7	7		N
8	8		N
9	9		N
10	10		N
11	11		N
12	12		N
13	13		N
14	14		N
15	15		N
16	16		N

Vehicle Detector Setup (MM) 6-2

Veh Detector	Type	TS2 Detector	Description
1	N-NTCIP	Yes	
2	N-NTCIP	Yes	
3	N-NTCIP	Yes	
4	N-NTCIP	Yes	
5	N-NTCIP	Yes	
6	N-NTCIP	Yes	
7	N-NTCIP	Yes	
8	N-NTCIP	Yes	
9	N-NTCIP	Yes	

10	N-NTCIP	Yes	
11	N-NTCIP	Yes	
12	N-NTCIP	Yes	
13	N-NTCIP	Yes	
14	N-NTCIP	Yes	
15	N-NTCIP	Yes	
16	N-NTCIP	Yes	
17	N-NTCIP	Yes	
18	N-NTCIP	Yes	
19	N-NTCIP	Yes	
20	N-NTCIP	Yes	
21	N-NTCIP	Yes	
22	N-NTCIP	Yes	
23	N-NTCIP	Yes	
24	N-NTCIP	Yes	
25	N-NTCIP	Yes	
26	N-NTCIP	Yes	
27	N-NTCIP	Yes	
28	N-NTCIP	Yes	
29	N-NTCIP	Yes	
30	N-NTCIP	Yes	
31	N-NTCIP	Yes	
32	N-NTCIP	Yes	
33	N-NTCIP	Yes	
34	N-NTCIP	Yes	
35	N-NTCIP	Yes	
36	N-NTCIP	Yes	
37	N-NTCIP	Yes	
38	N-NTCIP	Yes	
39	N-NTCIP	Yes	
40	N-NTCIP	Yes	
41	N-NTCIP	Yes	
42	N-NTCIP	Yes	
43	N-NTCIP	Yes	
44	N-NTCIP	Yes	
45	N-NTCIP	Yes	
46	N-NTCIP	Yes	
47	N-NTCIP	Yes	
48	N-NTCIP	Yes	
49	N-NTCIP	Yes	
50	N-NTCIP	Yes	
51	N-NTCIP	Yes	
52	N-NTCIP	Yes	
53	N-NTCIP	Yes	
54	N-NTCIP	Yes	
55	N-NTCIP	Yes	
56	N-NTCIP	Yes	
57	N-NTCIP	Yes	
58	N-NTCIP	Yes	
59	N-NTCIP	Yes	
60	N-NTCIP	Yes	

61	N-NTCIP	Yes	
62	N-NTCIP	Yes	
63	N-NTCIP	Yes	
64	N-NTCIP	Yes	

Vehicle Detector Plan Number - 1

Veh Detector	Phase	ECPI Log	Call Option	Delay Time	Ext Option	Extend Time / Passage Time	Queue Lim. / Discon. Time	Use Added Initial	Cross Switch Ph	Lock In	NTCIP Vol.	NTCIP Occ.	Pmt Queue Delay
1	1	No	Yes	2.0	Passage	0.0	0	No	0	None	No	No	No
2	2	No	Yes	0.0	Passage	0.0	0	No	0	None	No	No	No
3	3	No	Yes	2.0	Passage	0.0	0	No	0	None	No	No	No
4	4	No	Yes	2.0	Passage	0.0	0	No	0	None	No	No	No
5	5	No	Yes	2.0	Passage	0.0	0	No	0	None	No	No	No
6	6	No	Yes	0.0	Passage	0.0	0	No	0	None	No	No	No
7	7	No	Yes	2.0	Passage	0.0	0	No	0	None	No	No	No
8	8	No	Yes	2.0	Passage	0.0	0	No	0	None	No	No	No
9	0	No	No	0.0	Passage	0.0	0	No	0	None	No	No	No
10	2	No	Yes	2.0	Passage	0.0	0	No	0	None	No	No	No
11	0	No	No	0.0	Passage	0.0	0	No	0	None	No	No	No
12	4	No	Yes	4.0	Passage	0.0	0	No	0	None	No	No	No
13	0	No	No	2.0	Passage	0.0	0	No	0	None	No	No	No
14	6	No	Yes	0.0	Passage	0.0	0	No	0	None	No	No	No
15	0	No	No	0.0	Passage	0.0	0	No	0	None	No	No	No
16	8	No	Yes	4.0	Passage	0.0	0	No	0	None	No	No	No
21	5	No	No	0.0	None	0.0	0	No	0	None	No	No	No
22	6	No	No	0.0	None	0.0	0	No	0	None	No	No	No
23	7	No	No	0.0	None	0.0	0	No	0	None	No	No	No
24	8	No	No	0.0	None	0.0	0	No	0	None	No	No	No

Vehicle Detector Plan Number - 2

Veh Detector	Phase	ECPI Log	Call Option	Delay Time	Ext Option	Extend Time / Passage Time	Queue Lim. / Discon. Time	Use Added Initial	Cross Switch Ph	Lock In	NTCIP Vol.	NTCIP Occ.	Pmt Queue Delay
1	1	No	Yes	0.0	Passage	0.0	0	No	0	None	No	No	No
2	2	No	Yes	0.0	Passage	0.0	0	No	0	None	No	No	No
3	3	No	Yes	0.0	Passage	0.0	0	No	0	None	No	No	No
4	4	No	Yes	0.0	Passage	0.0	0	No	0	None	No	No	No
5	5	No	Yes	0.0	Passage	0.0	0	No	0	None	No	No	No
6	6	No	Yes	0.0	Passage	0.0	0	No	0	None	No	No	No
7	7	No	Yes	0.0	Passage	0.0	0	No	0	None	No	No	No
8	8	No	Yes	0.0	Passage	0.0	0	No	0	None	No	No	No
9	9	No	Yes	0.0	Passage	0.0	0	No	0	None	No	No	No
10	10	No	Yes	0.0	Passage	0.0	0	No	0	None	No	No	No
11	11	No	Yes	0.0	Passage	0.0	0	No	0	None	No	No	No
12	12	No	Yes	0.0	Passage	0.0	0	No	0	None	No	No	No
13	13	No	Yes	0.0	Passage	0.0	0	No	0	None	No	No	No
14	14	No	Yes	0.0	Passage	0.0	0	No	0	None	No	No	No
15	15	No	Yes	0.0	Passage	0.0	0	No	0	None	No	No	No

16	16	No	Yes	0.0	Passage	0.0	0	No	0	None	No	No	No

Vehicle Detector Plan Number - 3

Veh Detector	Phase	ECPI Log	Call Option	Delay Time	Ext Option	Extend Time / Passage Time	Queue Lim. / Discon. Time	Use Added Initial	Cross Switch Ph	Lock In	NTCIP Vol.	NTCIP Occ.	Pmt Queue Delay
1	1	No	Yes	0.0	Passage	0.0	0	No	0	None	No	No	No
2	2	No	Yes	0.0	Passage	0.0	0	No	0	None	No	No	No
3	3	No	Yes	0.0	Passage	0.0	0	No	0	None	No	No	No
4	4	No	Yes	0.0	Passage	0.0	0	No	0	None	No	No	No
5	5	No	Yes	0.0	Passage	0.0	0	No	0	None	No	No	No
6	6	No	Yes	0.0	Passage	0.0	0	No	0	None	No	No	No
7	7	No	Yes	0.0	Passage	0.0	0	No	0	None	No	No	No
8	8	No	Yes	0.0	Passage	0.0	0	No	0	None	No	No	No
9	9	No	Yes	0.0	Passage	0.0	0	No	0	None	No	No	No
10	10	No	Yes	0.0	Passage	0.0	0	No	0	None	No	No	No
11	11	No	Yes	0.0	Passage	0.0	0	No	0	None	No	No	No
12	12	No	Yes	0.0	Passage	0.0	0	No	0	None	No	No	No
13	13	No	Yes	0.0	Passage	0.0	0	No	0	None	No	No	No
14	14	No	Yes	0.0	Passage	0.0	0	No	0	None	No	No	No
15	15	No	Yes	0.0	Passage	0.0	0	No	0	None	No	No	No
16	16	No	Yes	0.0	Passage	0.0	0	No	0	None	No	No	No

Vehicle Detector Plan Number - 4

Veh Detector	Phase	ECPI Log	Call Option	Delay Time	Ext Option	Extend Time / Passage Time	Queue Lim. / Discon. Time	Use Added Initial	Cross Switch Ph	Lock In	NTCIP Vol.	NTCIP Occ.	Pmt Queue Delay
1	1	No	Yes	0.0	Passage	0.0	0	No	0	None	No	No	No
2	2	No	Yes	0.0	Passage	0.0	0	No	0	None	No	No	No
3	3	No	Yes	0.0	Passage	0.0	0	No	0	None	No	No	No
4	4	No	Yes	0.0	Passage	0.0	0	No	0	None	No	No	No
5	5	No	Yes	0.0	Passage	0.0	0	No	0	None	No	No	No
6	6	No	Yes	0.0	Passage	0.0	0	No	0	None	No	No	No
7	7	No	Yes	0.0	Passage	0.0	0	No	0	None	No	No	No
8	8	No	Yes	0.0	Passage	0.0	0	No	0	None	No	No	No
9	9	No	Yes	0.0	Passage	0.0	0	No	0	None	No	No	No
10	10	No	Yes	0.0	Passage	0.0	0	No	0	None	No	No	No
11	11	No	Yes	0.0	Passage	0.0	0	No	0	None	No	No	No
12	12	No	Yes	0.0	Passage	0.0	0	No	0	None	No	No	No
13	13	No	Yes	0.0	Passage	0.0	0	No	0	None	No	No	No
14	14	No	Yes	0.0	Passage	0.0	0	No	0	None	No	No	No
15	15	No	Yes	0.0	Passage	0.0	0	No	0	None	No	No	No
16	16	No	Yes	0.0	Passage	0.0	0	No	0	None	No	No	No

Ped Detector Phase Assignment (MM) 6-3

Mode: NTCIP

Called Phase	Detector

Called Phase	Detector
1	1
2	2
3	3
4	4
5	5
6	6
7	7
8	8
9	9
10	10
11	11
12	12
13	13
14	14
15	15
16	16

Ontario, CA

ECONOLITE

MOVING TRAFFIC FORWARD

Milliken Ave @ Inland Empire Boulevard - 10.211.51.171 - ASC3 - Econolite Type - ASC/3

Detectors

Detectors - Pg 2

Log - Speed Detector Setup (MM) 6-4

NTCIP Log Period: 60 | ECPI Log Period: 0 | Length Unit: Inches

Speed Detector	Local Detector	One/Two Detector	Vehicle Length	Trap length	Enable Log
1	0	1	0	0	No
2	0	1	0	0	No
3	0	1	0	0	No
4	0	1	0	0	No
5	0	1	0	0	No
6	0	1	0	0	No
7	0	1	0	0	No
8	0	1	0	0	No
9	0	1	0	0	No
10	0	1	0	0	No
11	0	1	0	0	No
12	0	1	0	0	No
13	0	1	0	0	No
14	0	1	0	0	No
15	0	1	0	0	No
16	0	1	0	0	No

Vehicle Detector Diagnostics (MM) 6-5

Veh Diagnostic Plan Number - 1

Det	Counts	Act	Pres	Multiplier	Failed Time	Failed Call Delay

Veh Diagnostic Plan Number - 2

Det	Counts	Act	Pres	Multiplier	Failed Time	Failed Call Delay

Veh Diagnostic Plan Number - 3

Det	Counts	Act	Pres	Multiplier	Failed Time	Failed Call Delay

Veh Diagnostic Plan Number - 4

Det	Counts	Act	Pres	Multiplier	Failed Time	Failed Call Delay

Pedestrian Detector Diagnostics (MM) 6-6

Ped Diagnostic Plan Number - 1

Det	Counts	Act	Pres	Multiplier

Ped Diagnostic Plan Number - 2

Det	Counts	Act	Pres	Multiplier

Ped Diagnostic Plan Number - 3

Det	Counts	Act	Pres	Multiplier

Ped Diagnostic Plan Number - 4

Det	Counts	Act	Pres	Multiplier

Location: San Bernardino Fwy WB Milliken Ave
System: Milliken
District: 08
Master At: Here
I/C: Copper
Designed By:
Installed By: RCN
Service Info:

Timing Change:	Date Start:	Date End:	Designed:	Installed:
	11/13/1996			

		FLASH
PHASE	1) SB LEFT TURN	[ ]
	2) NB THROUGH	[ ]
	3) WB LEFT TURN	[ ]
	4) WB OFF RAMP AND THRU	[ ]
	5) NB LFT TURN	[ ]
	6) SB THROUGH	[ ]
	7) EB LEFT TURN	[ ]
	8) EB THRU	[ ]
OVERLAP	A)	[ ]
	B)	[ ]
	C)	[ ]
	D)	[ ]
	E)	[ ]
	F)	[ ]

Intersection Layout

Comments and Notes:

RAM Checksum

Page 2: 4590	Page 8: B445
Page 3: 6078	Page 9: D2FD
Page 4: F9F7	Page 10: 6F66
Page 5: 191A	Page 11: 8D1A
Page 6: 191A	Page 12: 8D98
Page 7: 324B	Page 13: 86F7

CONFIGURATION PHASE FLAGS

Phases (2-1-1-1)	
Permitted	1 2 3 4 5 6 7 8
Restricted	. . . . .

Phase Recalls (2-1-1-2)	
Vehicle Min	. 2 . . . 6 . .
Vehicle Max	. . . . .
Pedestrian	. . . . .
Bicycle	. . . . .

Phase Locks (2-1-1-3)	
Red	. . . . .
Yellow	1 2 3 4 5 6 7 8
Force/Max	. . . . .

Phase Features (2-1-1-4) *	
Double Entry	. . . . .
Rest In Walk	. . . . .
Rest In Red	. . . . .
Walk 2	. 2 . . . . .
Max Green 2	. . . . .
Max Green 3	. . . . .

Startup (2-1-1-5)	
First Green Phases	. 2 . . . 6 . .
Yellow Start Phases	. . . . .
Vehicle Calls	1 2 3 4 5 6 7 8
Pedestrian Calls	. 2 . 4 . 6 . 8
Yellow Start Overlaps	. . . . .
Startup All-Red	5.0

Call To Phase (2-1-2-1)		Omit On Green	
1	. . . . .	1	. . . . .
2	. . . . .	2	. . . . .
3	. . . . .	3	. . . . .
4	. . . . .	4	. . . . .
5	. . . . .	5	. . . . .
6	. . . . .	6	. . . . .
7	. . . . .	7	. . . . .
8	. . . . .	8	. . . . .

Flashing Colors (2-1-2-2)	
Yellow Flash Phases	. . . . .
Yellow Flash Overlap	. . . . .
Flash In Red Phases	. . . . .
Flash In Red Overlaps	. . . . .

Special Operation (2-1-2-3)	
Single Exit Phase	. . . . .
Driveway Signal Phases	. . . . .
Driveway Signal Overlaps	. . . . .
Leading Ped Phases	. . . . .

Protected Permissive (2-1-2-4)	
Protected Permissive	. . . . .

Pedestrian (2-1-3) *	
P1	. . . . .
P2	. 2 . . . . .
P3	. . . . .
P4	. . . . .
P5	. . . . .
P6	. . . . .
P7	. . . . .
P8	. . . . .

Overlap (2-1-4) *

Overlap	Parent	Omit	No Start	Not
A	. . . . . 6 7 .	. . . . .	. . . . .	. . . . .
B	. . 3	. . . . .	. . . . .	. . . . .
C	. . . . .	. . . . .	. . . . .	. . . . .
D	. . . . .	. . . . .	. . . . .	. . . . .
E	. . . . .	. . . . .	. . . . .	. . . . .
F	. . . . .	. . . . .	. . . . .	. . . . .

PHASE TIMING

Phase (2-2)	-1- *	-2- *	-3- *	-4- *	-5- *	-6- *	-7- *	-8- *
--- Walk 1 ---	0	0	0	0	0	0	0	0
Flash Don't Walk	0	38	0	0	0	0	0	0
Minimum Green	5	5	5	5	5	5	5	5
Det Limit	0	0	0	0	0	0	0	0
Max Initial	0	0	0	0	0	0	0	0
Max Green 1	30	60	30	50	40	50	50	40
Max Green 2	30	60	30	50	40	50	50	40
Max Green 3	30	60	30	50	40	50	50	40
Extension	2.0	2.0	2.0	2.0	2.0	2.0	2.0	2.0
Maximum Gap	2.0	2.0	2.0	2.0	2.0	2.0	2.0	2.0
Minimum Gap	2.0	2.0	2.0	2.0	2.0	2.0	2.0	2.0
Add Per Vehicle	0.0	0.0	0.0	0.0	0.0	0.0	0.0	0.0
Reduce Gap By	0.0	0.0	0.0	0.0	0.0	0.0	0.0	0.0
Reduce Every	0.0	0.0	0.0	0.0	0.0	0.0	0.0	0.0
Yellow	3.0	4.0	3.0	4.0	3.0	4.0	3.0	4.0
All-Red	2.0	2.0	2.0	2.0	2.0	2.0	2.0	2.0
Ped/Bike (2-3)	-1-	-2- *	-3-	-4-	-5-	-6-	-7-	-8-
--- Walk 2 ---	0	7	0	0	0	0	0	0
Delay/Early Walk	0	0	0	0	0	0	0	0
Solid Don't Walk	0	0	0	0	0	0	0	0
Bike Green	0	0	0	0	0	0	0	0
Bike All-Red	0.0	0.0	0.0	0.0	0.0	0.0	0.0	0.0

OVERLAP TIMING

Overlap (2-4)	A	B	C	D	E	F
Green	0.0	0.0	0.0	0.0	0.0	0.0
Yellow	5.0	5.0	5.0	5.0	5.0	5.0
Red	0.0	0.0	0.0	0.0	0.0	0.0

Red Revert

Red Revert (2-5)	
Time	5.0
All-Red Sec/Min (2-6)	
All-Red Sec/Min:	SEC

Max 2 Extension

Max/Gap Out (2-7)	
Max Cnt	0
Gap Cnt	0

Local Plan 1...9 (7-1) TIMING DATA

COORDINATION

[Offsets] Green Factors or Press [F] to Select Force-Off

	*	Cycle	Multi	Perm	A	B	C	-1-	-2-	-3-	-4-	-5-	-6-	-7-	-8-
Plan 1	Green Factor	120						17	21	17	43	25	13	39	21
Plan 2	Green Factor	120						18	18	20	42	24	12	39	23
Plan 3	Green Factor	120						18	21	16	43	26	13	38	21
Plan 4	Green Factor														
Plan 5	Green Factor														
Plan 6	Green Factor														
Plan 7	Green Factor														
Plan 8	Green Factor														
Plan 9	Green Factor														

Master Timer Sync (7-A)	
Enable in Plans	
1-9	. . . . .
11-19	. . . . .
21-29	. . . . .

Master Sub Master	
Input	
Output	

Local Plan 1...9 (7-1) PHASE FLAGS

	Lag	Sync	Hold	Omit	Veh Min	Veh Max	Ped	Bike
Plan 1	. 2 . 4 . 6 . 8	. 2 . . . 6 . .	. . . . .	. . . . .	1 . . 4 5 . . 8	. . 3 . . . 7 .	. . . . .	. . . . .
Plan 2	. 2 . 4 . 6 . 8	. 2 . . . 6 . .	. . . . .	. . . . .	1 . . 4 5 . . 8	. . 3 . . . 7 .	. . . . .	. . . . .
Plan 3	. 2 . 4 . 6 . 8	. 2 . . . 6 . .	. . . . .	. . . . .	1 . . 4 5 . . 8	. . 3 . . . 7 .	. . . . .	. . . . .
Plan 4	. . . . .	. . . . .	. . . . .	. . . . .	. . . . .	. . . . .	. . . . .	. . . . .
Plan 5	. . . . .	. . . . .	. . . . .	. . . . .	. . . . .	. . . . .	. . . . .	. . . . .
Plan 6	. . . . .	. . . . .	. . . . .	. . . . .	. . . . .	. . . . .	. . . . .	. . . . .
Plan 7	. . . . .	. . . . .	. . . . .	. . . . .	. . . . .	. . . . .	. . . . .	. . . . .
Plan 8	. . . . .	. . . . .	. . . . .	. . . . .	. . . . .	. . . . .	. . . . .	. . . . .
Plan 9	. . . . .	. . . . .	. . . . .	. . . . .	. . . . .	. . . . .	. . . . .	. . . . .

FREE PLAN PHASE FLAGS

(7-E) Free	
Lag	Omit
. 2 . 4 . 6 . 8	. . . . .
Veh Min	Veh Max
. 2 . . . 6 . .	. . . . .
Ped	Bike
. . . . .	. . . . .
Cond	Cond Grn
. . . . .	10

MANUAL COMMANDS

Manual Plan (4-1)	
Plan	OffSet
	A

Plan: 1-9
15 or 254 = Flash
14 or 255 = Free
Offset A, B, or C

Special Function Override (4-2)			
#	Control	#	Control
1	NORMAL	3	NORMAL
2	NORMAL	4	NORMAL

Detector Reset	(4-3)
Local Manual (4-4)	OFF

Local Plan 11...19 (7-2) TIMING DATA COORDINATION

[Offsets] Green Factors or Press [F] to Select Force-Off

		Cycle	Multi	Perm	A	B	C	-1-	-2-	-3-	-4-	-5-	-6-	-7-	-8-
Plan 11	Green Factor														
Plan 12	Green Factor														
Plan 13	Green Factor														
Plan 14	Green Factor														
Plan 15	Green Factor														
Plan 16	Green Factor														
Plan 17	Green Factor														
Plan 18	Green Factor														
Plan 19	Green Factor														

Local Plan 11...19 (7-2) PHASE FLAGS

	Lag	Sync	Hold	Omit	Veh Min	Veh Max	Ped	Bike
Plan 11	. . . . .	. . . . .	. . . . .	. . . . .	. . . . .	. . . . .	. . . . .	. . . . .
Plan 12	. . . . .	. . . . .	. . . . .	. . . . .	. . . . .	. . . . .	. . . . .	. . . . .
Plan 13	. . . . .	. . . . .	. . . . .	. . . . .	. . . . .	. . . . .	. . . . .	. . . . .
Plan 14	. . . . .	. . . . .	. . . . .	. . . . .	. . . . .	. . . . .	. . . . .	. . . . .
Plan 15	. . . . .	. . . . .	. . . . .	. . . . .	. . . . .	. . . . .	. . . . .	. . . . .
Plan 16	. . . . .	. . . . .	. . . . .	. . . . .	. . . . .	. . . . .	. . . . .	. . . . .
Plan 17	. . . . .	. . . . .	. . . . .	. . . . .	. . . . .	. . . . .	. . . . .	. . . . .
Plan 18	. . . . .	. . . . .	. . . . .	. . . . .	. . . . .	. . . . .	. . . . .	. . . . .
Plan 19	. . . . .	. . . . .	. . . . .	. . . . .	. . . . .	. . . . .	. . . . .	. . . . .

Local Plan 21...29 (7-3) TIMING DATA COORDINATION

[Offsets] Green Factors or Press [F] to Select Force-Off

		Cycle	Multi	Perm	A	B	C	-1-	-2-	-3-	-4-	-5-	-6-	-7-	-8-
Plan 21	Green Factor														
Plan 22	Green Factor														
Plan 23	Green Factor														
Plan 24	Green Factor														
Plan 25	Green Factor														
Plan 26	Green Factor														
Plan 27	Green Factor														
Plan 28	Green Factor														
Plan 29	Green Factor														

Local Plan 21...29 (7-3) PHASE FLAGS

	Lag	Sync	Hold	Omit	Veh Min	Veh Max	Ped	Bike
Plan 21	.....	.....	.....	.....	.....	.....	.....	.....
Plan 22	.....	.....	.....	.....	.....	.....	.....	.....
Plan 23	.....	.....	.....	.....	.....	.....	.....	.....
Plan 24	.....	.....	.....	.....	.....	.....	.....	.....
Plan 25	.....	.....	.....	.....	.....	.....	.....	.....
Plan 26	.....	.....	.....	.....	.....	.....	.....	.....
Plan 27	.....	.....	.....	.....	.....	.....	.....	.....
Plan 28	.....	.....	.....	.....	.....	.....	.....	.....
Plan 29	.....	.....	.....	.....	.....	.....	.....	.....

DETECTORS

Detector Attributes (5-1) *				Slot	Detector Configuration (5-2)				
Det	Type	Phases	Lock		Det	Delay	Extend	Recall	Port
1	COUNT+CALL+EXTEND	1	NO	I1U	1			10	3.2
2	COUNT+CALL+EXTEND	1	NO	I1L	2			10	7.2
3	COUNT+CALL+EXTEND	. 2	NO	I2U	3			10	1.1
4	COUNT+CALL+EXTEND	. 2	NO	I2L	4			10	1.5
5	COUNT+CALL+EXTEND	. 2	NO	I3U	5			10	4.5
6	CALL+EXTEND	. 2	NO	I3L	6			10	6.2
7	COUNT+CALL+EXTEND	. 2	NO	I4U	7			10	2.1
8	COUNT+CALL+EXTEND	. 2	NO	I4L	8			10	7.4
9	COUNT+CALL+EXTEND	. . 3	NO	I5U	9			10	3.4
10	COUNT+CALL+EXTEND	. . 3	NO	I5L	10			10	7.6
11	COUNT+CALL+EXTEND	. . . 4 . . .	NO	I6U	11			10	1.3
12	COUNT+CALL+EXTEND	. . . 4 . . .	NO	I6L	12			10	1.7
13	COUNT+CALL+EXTEND	. . . . . 7 .	NO	I7U	13			10	4.7
14	CALL+EXTEND	. . . 4 . . .	NO	I7L	14			10	6.4
15	COUNT+CALL+EXTEND	. . . 4 . . .	NO	I8U	15			10	2.3
16	COUNT+CALL+EXTEND	. . . 4 . . .	NO	I8L	16			10	7.8
17	COUNT+CALL+EXTEND	1	NO	I9U	17			10	3.6
18	COUNT+CALL+EXTEND	. . 3	NO	I9L	18			10	3.8
19	COUNT+CALL+EXTEND	. 2	NO	I10U	19			10	4.1
20	COUNT+CALL+EXTEND	. . . 4 . . .	NO	I10L	20			10	4.2
21	COUNT+CALL+EXTEND	. . . . 5 . .	NO	J1U	21			10	3.1
22	COUNT+CALL+EXTEND	. . . . 5 . .	NO	J1L	22			10	7.1
23	COUNT+CALL+EXTEND	. . . . . 6 .	NO	J2U	23			10	1.2
24	COUNT+CALL+EXTEND	. . . . . 6 .	NO	J2L	24			10	1.6
25	COUNT+CALL+EXTEND	. . . . . 6 .	NO	J3U	25			10	4.6
26	CALL+EXTEND	. . . . . 6 .	NO	J3L	26			10	6.3
27	COUNT+CALL+EXTEND	. . . . . 6 .	NO	J4U	27			10	2.2
28	COUNT+CALL+EXTEND	. . . . . 6 .	NO	J4L	28			10	7.3
29	COUNT+CALL+EXTEND	. . . . . 7 .	NO	J5U	29			10	3.3
30	COUNT+CALL+EXTEND	. . . . . 7 .	NO	J5L	30			10	7.5
31	COUNT+CALL+EXTEND	 8	NO	J6U	31			10	1.4
32	COUNT+CALL+EXTEND	 8	NO	J6L	32			10	1.8
33	COUNT+CALL+EXTEND	 8	NO	J7U	33			10	4.8
34	CALL+EXTEND	 8	NO	J7L	34			10	6.5
35	COUNT+CALL+EXTEND	 8	NO	J8U	35			10	2.4
36	COUNT+CALL+EXTEND	 8	NO	J8L	36			10	7.7
37	COUNT+CALL+EXTEND	. . . . 5 . .	NO	J9U	37			10	3.5
38	COUNT+CALL+EXTEND	. . . . . 7 .	NO	J9L	38			10	3.7
39	COUNT+CALL+EXTEND	. . . . . 6 .	NO	J10U	39			10	4.3
40	COUNT+CALL+EXTEND	 8	NO	J10L	40			10	4.4
41	PEDESTRIAN	. 2	NO	I 12U	41			10	5.1
42	PEDESTRIAN	. . . 4 . . .	NO	I 12L	42			10	5.3
43	PEDESTRIAN	. . . . . 6 .	NO	I 13U	43			10	5.2
44	PEDESTRIAN	 8	NO	I 13L	44			10	5.4

Failure Times(5-3)	Minutes
Maximum On Time	
Fail Reset Time	

Failure Override (5-4)	
Detectors 1-8	. . . . .
Detectors 9-16	. . . . .
Detectors17-24	. . . . .
Detectors 25-32	. . . . .
Detectors 33-40	. . . . .
Detectors 41-44	. . . . .

System Detector Assignment (5-5)

Sys Det	1	2	3	4	5	6	7	8
Det Num								
Sys Det	9	10	11	12	13	14	15	16
Det Num								

CIC Operation (5-6-1)	
Enable in Plans	. . . . .

CIC Values (5-6-2)	Volume	Occupancy	Demand
Smoothing	0.66	0.66	0.66
Multiplier	4.0	0.33	
Exponent	0.50	1.00	

Detector-to-Phase Assignment (5-6-3)

Sys Det	1	2	3	4	5	6	7	8
Phase								
Sys Det	9	10	11	12	13	14	15	16
Phase								

Input File Port-Bit Assignments

332 Cabinet - For Reference Only

	1	2	3	4	5	6	7	8	9	10	11	12	13	14
I-	3.2	1.1	4.5	2.1	3.4	1.3	4.7	2.3	3.6	4.1	6.6	5.1	5.2	6.7
	7.2	1.5	6.2	7.4	7.6	1.7	6.4	7.8	3.8	4.2	2.7	5.3	5.4	6.8
J-	3.1	1.2	4.6	2.2	3.3	1.4	4.8	2.4	3.5	4.3	2.8	5.5	5.6	2.5
	7.1	1.6	6.3	7.3	7.5	1.8	6.5	7.7	3.7	4.4	6.1	5.7	5.8	2.6

TOD SCHEDULE

Table 1 (8-2-1) *		
Time	Plan	OS
0500	1	A
1000	2	A
1500	3	A
2300	255	A
		A
		A
		A
		A
		A
		A
		A
		A
		A
		A
		A
		A

Table 2 (8-2-2) *		
Time	Plan	OS
	255	A
		A
		A
		A
		A
		A
		A
		A
		A
		A
		A
		A
		A
		A
		A
		A

Table 3 (8-2-3)		
Time	Plan	OS
		A
		A
		A
		A
		A
		A
		A
		A
		A
		A
		A
		A
		A
		A
		A
		A

Table 4 (8-2-4)		
Time	Plan	OS
		A
		A
		A
		A
		A
		A
		A
		A
		A
		A
		A
		A
		A
		A
		A
		A

Table 5 (8-2-5)		
Time	Plan	OS
		A
		A
		A
		A
		A
		A
		A
		A
		A
		A
		A
		A
		A
		A
		A
		A

Table 6 (8-2-6)		
Time	Plan	OS
		A
		A
		A
		A
		A
		A
		A
		A
		A
		A
		A
		A
		A
		A
		A
		A

WEEKDAY ASSIGNMENT

Weekday Table Assignments (8-2-7)						
Mon	Tue	Wed	Thu	Fri	Sat	Sun
1	1	1	1	1	2	2

HOLIDAY TABLES

Floating Holiday Table (8-2-8)

#	Mnth	Week	DOW	Table
1			.....	
2			.....	
3			.....	
4			.....	
5			.....	
6			.....	
7			.....	
8			.....	
9			.....	
10			.....	
11			.....	
12			.....	
13			.....	
14			.....	
15			.....	
16			.....	

Fixed Holiday Table (8-2-9)

#	Mnth	Day	DOW	Table
1			.....	
2			.....	
3			.....	
4			.....	
5			.....	
6			.....	
7			.....	
8			.....	
9			.....	
10			.....	
11			.....	
12			.....	
13			.....	
14			.....	
15			.....	
16			.....	

Solar Clock Data (8-4)

North Latitude	34
West Longitude	118
Local Time Zone	8

Sabbatical Clock (8-5)

Hebrew	Ped Recall
Sabbath	.....
Holiday	.....

Daylight Saving (8-6)

Enabled	YES

TOD FUNCTIONS

TOD Functions (8-3)

#	Start	End	DOW	Action	Phases
1			.....		.....
2			.....		.....
3			.....		.....
4			.....		.....
5			.....		.....
6			.....		.....
7			.....		.....
8			.....		.....
9			.....		.....
10			.....		.....
11			.....		.....
12			.....		.....
13			.....		.....
14			.....		.....
15			.....		.....
16			.....		.....

Action Codes:

0. None
1. Permitted
2. Restricted
4. Veh Min Recall
5. Veh Max Recall
6. Ped Recall
7. Bike Recall
8. Red Lock
9. Yellow Lock
10. Force/Max Lock
11. Double Entry
12. Y-Coord C
13. Y-Coord D
14. Free
15. Flashing
16. Walk 2
17. Max Green 2
18. Max Green 3
19. Rest in Walk
20. Rest in Red
21. Free Lag Phases
22. Special Functions
23. Truck Preempt
24. Conditional Service
25. Conditional Service
26. Leading Ped
27. Traffic Actuated Max 2
41. Protected Permissive
42. Protected Permissive

Action Code = Phases added to normal setting

100+Action Code = Phases removed

200+Action Code = Phases replaced

COMMUNICATIONS

C2 (6-1-1)	*
Address	1
Protocol	AB3418
Limit Access	
Baud	1200
Parity	NONE
Data Bits	8
Stop Bits	1
RTS On Time	20
RTS Off Time	20
Handshaking	NORMAL

C20 (6-1-2)	
Address	
Protocol	AB3418
Limit Access	
Baud	1200
Parity	NONE
Data Bits	8
Stop Bits	1
RTS On Time	20
RTS Off Time	20
Handshaking	NORMAL

C21 (6-1-3)	
Address	
Protocol	AB3418
Limit Access	
Baud	1200
Parity	NONE
Data Bits	8
Stop Bits	1
RTS On Time	20
RTS Off Time	20
Handshaking	NORMAL

Limit Access:

0-None
1-Status Only
2-Status, Set Pattern, Time
3-Status, Set Pattern, Time, Manual Plan

SOFT LOGIC

Soft Logic (6-2)

#	Data	OP	Data	OP	Data	OP	Data
1							
2							
3							
4							
5							
6							
7							
8							
9							
10							
11							
12							
13							
14							
15							
16							

*Refer to User's Manual for Data and OP Codes

CALLBACK NUMBERS

Callback Numbers (6-3...3)

Line Out	
Local Toll	
Long Distance	
Delay	10
Area Code	
Phone Number	

Line Out	
Local Toll	
Long Distance	
Delay	10
Area Code	
Phone Number	

Line Out	
Local Toll	
Long Distance	
Delay	10
Area Code	
Phone Number	

NETWORK

Network (6-4)

Address	
Protocol	AB3418
Port	27000
IP Mode	STATIC

IP Address	0 . 0 . 0 . 0
Netmask	255 . 255 . 255 . 0
Broadcast	0 . 0 . 0 . 254
Gateway	0 . 0 . 0 . 1

RAILROAD PREEMPTION

RR 1

(3-1-1)	Timing	Phase Flags (3-1-2)			Pedestrian Flags (3-1-3)			Overlap Flags (3-1-4)		
Delay		Grn Hold	Yel Flash	Red Flash	Walk	Flash DW	Solid DW	Grn Hold	Yel Flash	Red Flash
Clear 1	10	. 2 . . 5 . . .	. . . .	. . . .	. . . .	. . . .	. 2 . 4 . 6 . 8	. . . . . .	. . . . . .	. . . . . .
Clear 2		. . . .	. . . .	. . . .	. . . .	. . . .	. . . .	. . . . . .	. . . . . .	. . . . . .
Clear 3		. . . .	. . . .	. . . .	. . . .	. . . .	. . . .	. . . . . .	. . . . . .	. . . . . .
Hold		. . . .	. . . .	1 2 3 4 5 6 7 8	. . . .	. . . .	. . . .	. . . . . .	. . . . . .	A B C D E F
Exit	5									
Min Grn										
Ped Clr										

Exit Parameters (3-1-5)			
Phase Green	Overlap Green	Vehicle Recall	Ped Call
. . . .	. . . . . .	1 2 3 4 5 6 7 8	. 2 . 4 . 6 . 8

Configuration (3-1-6)			
Port	Gate Port	Latching	Power-Up
2.5	0.0	YES	FLASHING

RR 2

(3-2-1)	Timing	Phase Flags (3-2-2)			Pedestrian Flags (3-2-3)			Overlap Flags (3-2-4)		
Delay		Grn Hold	Yel Flash	Red Flash	Walk	Flash DW	Solid DW	Grn Hold	Yel Flash	Red Flash
Clear 1	10	. . . 4 . . 7 .	. . . .	. . . .	. . . .	. . . .	. 2 . 4 . 6 . 8	. . . . . .	. . . . . .	. . . . . .
Clear 2		. . . .	. . . .	. . . .	. . . .	. . . .	. . . .	. . . . . .	. . . . . .	. . . . . .
Clear 3		. . . .	. . . .	. . . .	. . . .	. . . .	. . . .	. . . . . .	. . . . . .	. . . . . .
Hold		1 2 3 . . 6 . .	. . . .	. . . .	. 2 . . . 6 . .	. . . .	. . . 4 . . . 8	. . . . . .	. . . . . .	. . . . . .
Exit										
Min Grn										
Ped Clr										

Exit Parameters (3-2-5)			
Phase Green	Overlap Green	Vehicle Recall	Ped Recall
. . . .	. . . . . .	. . . 4 . . 7 .	. . . .

Configuration (3-2-6)			
Port	Gate Port	Latching	Power-up
2.6	0.0	YES	DARK

EMERGENCY VEHICLE PREEMPTION

EVA (3-A)

Preempt Timers			Phase Green	Overlap Green
Delay	Clear	Max		
*	10	30	. 2 . . 5 . . .	. . . . . .

Port	Latching	Phase Termination
5.5	NO	ADVANCE

EVB (3-B)

Preempt Timers			Phase Green	Overlap Green
Delay	Clear	Max		
*	10	30	. . . 4 . . 7 .	. . . . . .

Port	Latching	Phase Termination
5.6	NO	ADVANCE

EVC (3-C)

Preempt Timers			Phase Green	Overlap Green
Delay	Clear	Max		
*	10	30	1 . . . . 6 . .	. . . . . .

Port	Latching	Phase Termination
5.7	NO	ADVANCE

EVD (3-D)

Preempt Timers			Phase Green	Overlap Green
Delay	Clear	Max		
*	10	60	. . 3 8	. . . . . .

Port	Latching	Phase Termination
5.8	NO	ADVANCE

INPUTS

		7 Wire I/C (2-1-5-1)			
		Input	Port	Input	Port
Enable	NO	R1	3.8	Free	3.6
Max ON		R2	3.5	D2	2.8
Max OFF		R3	3.7	D3	6.1

Manual Control (2-1-5-2)	
Input	Port
Manual Advance	6.6
Advance Enable	6.6

Cabinet Status (2-1-5-3)	
Input	Port
Flash Bus	
Door Ajar	
Flash Sense	6.7
Stop Time	6.8

Special Function (2-1-5-4)	
Input	Port
1	
2	
3	
4	

Battery Backup (2-1-5-5)	
Port	Operation
	NORMAL

Y-Coordination (2-1-5-6)	
Port C	Port D
6.1	2.8

OUTPUTS

Loadswitch Assignments (2-1-6)							+
A	1	2	22	3	4	24	9
B	5	6	26	7	8	28	10
X	13	14	0	11	12	0	0

Loadswitch Codes:

0 Unused (no output)
1-8 Vehicle 1-8
9-14 Overlap A-F
21-28 Ped 1-8
41-47 Special Functions
41 Protected Permissive Flashing Phase 1
43 Protected Permissive Flashing Phase 3
45 Protected Permissive Flashing Phase 5
47 Protected Permissive Flashing Phase 7
51-57 Special Functions
71-72 Seven Wire I/C

\+ middle output of loadswitches 3 and 6 Channel 9 and 10

YELLOW YIELD COORDINATION

					Force-Offs											
Y-Coord Plans (7-C,D)	Long Grn	No Grn	Offset	Perm	-1-	-2-	-3-	-4-	-5-	-6-	-7-	-8-	Coord	Lag	Min Recall	Restricted
Plan C													. 2 . . . 6 . .	. 2 . 4 . 6 . 8	. . . . .	. . . . .
Plan D													. 2 . . . 6 . .	. 2 . 4 . 6 . 8	. . . . .	. . . . .

TRANSIT PRIORITY

Local Plans (3-E) 1...9 11...19		Early Green	Green Extend	Inhibit Cycles	Phase 1 Minimum	Phase 2 Minimum	Phase 3 Minimum	Phase 4 Minimum	Phase 5 Minimum	Phase 6 Minimum	Phase 7 Minimum	Phase 8 Minimum
Plan 1	Green Factor											
Plan 2	Green Factor											
Plan 3	Green Factor											
Plan 4	Green Factor											
Plan 5	Green Factor											
Plan 6	Green Factor											
Plan 7	Green Factor											
Plan 8	Green Factor											
Plan 9	Green Factor											
Plan 11	Green Factor											
Plan 12	Green Factor											
Plan 13	Green Factor											
Plan 14	Green Factor											
Plan 15	Green Factor											
Plan 16	Green Factor											
Plan 17	Green Factor											
Plan 18	Green Factor											
Plan 19	Green Factor											

Transit Priority Configuration (3-E-A)				Indicator Output	
Enable in Plans		Input	Type	Stop	Go
Plan 1-9	. . . . .	0.0	OPT	0	0
Plan 11-19	. . . . .	0.0	OPT	0	0

Queue Jump (3-E-B)	
Grn Hold	Hold Phase
	. . . . .
	. . . . .

Free Plans (3-E-E)	
Max Grn Hold	Hold Phase
	. . . . .

Access Utilities (9-5)	
Password	***
Timeout	30

TRUCK PRIORITY

Truck Priority (3-F)	Passage	CarryOver	Clearance	Next Priority	Phase Green	Det 2 Port	Det 3 Port	Det 4 Port	Sign Output	Slave Input	Slave Output
					. . . . .	0.0	0.0	0.0	0	0.0	0

Location: San Bernardino Fwy EB Milliken Ave
System: Milliken
District: 08
Master At: W/B
I/C:
Designed By:
Installed By: RCN
Service Info:

Timing Change:	Date Start:	Date End:	Designed:	Installed:
	11/13/1996			

Intersection Layout

		FLASH
PHASE	1)	[ ]
	2) NB Milliken Ave	[ ]
	3)	[ ]
	4) EB Off Ramp	[ ]
	5) NBLT Milliken Ave	[ ]
	6) SB Milliken Ave	[ ]
	7)	[ ]
	8)	[ ]

OVERLAP	A)	[ ]
	B)	[ ]
	C)	[ ]
	D)	[ ]
	E)	[ ]
	F)	[ ]

Comments and Notes:

RAM Checksum

Page 2: 2304	Page 8: 663C
Page 3: F07F	Page 9: D2FD
Page 4: BF7F	Page 10: FA07
Page 5: 191A	Page 11: C3CB
Page 6: 191A	Page 12: D68F
Page 7: 3AC2	Page 13: 86F7

Post Mile: 8.994

Printed: 10/19/2022

CONFIGURATION PHASE FLAGS

Phases (2-1-1-1) *	
Permitted	. 2 . 4 5 6 . .
Restricted	. . . . .

Phase Recalls (2-1-1-2) *	
Vehicle Min	. . . . .
Vehicle Max	. . . . .
Pedestrian	. . . . .
Bicycle	. . . . .

Phase Locks (2-1-1-3) *	
Red	. . . . .
Yellow	. . . . .
Force/Max	. . . . .

Phase Features (2-1-1-4)	
Double Entry	. . . . .
Rest In Walk	. . . . .
Rest In Red	. . . . .
Walk 2	. . . . .
Max Green 2	. . . . .
Max Green 3	. . . . .

Startup (2-1-1-5)	
First Green Phases	. 2 . . . 6 . .
Yellow Start Phases	. . . . .
Vehicle Calls	1 2 3 4 5 6 7 8
Pedestrian Calls	. 2 . 4 . 6 . 8
Yellow Start Overlaps	. . . . .
Startup All-Red	5.0

	Call To Phase (2-1-2-1)		Omit On Green
1	. . . . .	1	. . . . .
2	. . . . .	2	. . . . .
3	. . . . .	3	. . . . .
4	. . . . .	4	. . . . .
5	. . . . .	5	. . . . .
6	. . . . .	6	. . . . .
7	. . . . .	7	. . . . .
8	. . . . .	8	. . . . .

Flashing Colors (2-1-2-2)	
Yellow Flash Phases	. . . . .
Yellow Flash Overlap	. . . . .
Flash In Red Phases	. . . . .
Flash In Red Overlaps	. . . . .

Special Operation (2-1-2-3)	
Single Exit Phase	. . . . .
Driveway Signal Phases	. . . . .
Driveway Signal Overlaps	. . . . .
Leading Ped Phases	. . . . .

Protected Permissive (2-1-2-4)	
Protected Permissive	. . . . .

Pedestrian (2-1-3) *	
P1	. . . . .
P2	. . . . .
P3	. . . . .
P4	. . . . .
P5	. . . . .
P6	. . . . .
P7	. . . . .
P8	. . . . .

Overlap (2-1-4) *				
Overlap	Parent	Omit	No Start	Not
A	. . . 4 5 . . .	. . . . .	. . . . .	. . . . .
B	. . . 4 . 6 . .	. . . . .	. . . . .	. . . . .
C	. . . . .	. . . . .	. . . . .	. . . . .
D	. . . . .	. . . . .	. . . . .	. . . . .
E	. . . . .	. . . . .	. . . . .	. . . . .
F	. . . . .	. . . . .	. . . . .	. . . . .

PHASE TIMING

Phase (2-2)	-1-	-2- *	-3-	-4- *	-5- *	-6- *	-7-	-8-
--- Walk 1 ---	0	0	0	0	0	0	0	10
Flash Don't Walk	0	0	0	0	0	0	0	10
Minimum Green	10	5	10	5	5	0	10	10
Det Limit	10	0	10	0	0	0	10	10
Max Initial	10	0	10	0	0	0	10	10
Max Green 1	50	80	50	55	50	50	50	50
Max Green 2	50	80	50	55	50	50	50	50
Max Green 3	50	80	50	55	50	50	50	50
Extension	5.0	2.0	5.0	2.0	2.0	2.0	5.0	5.0
Maximum Gap	5.0	2.0	5.0	2.0	2.0	2.0	5.0	5.0
Minimum Gap	5.0	2.0	5.0	2.0	2.0	2.0	5.0	5.0
Add Per Vehicle	1.0	0.0	1.0	0.0	0.0	0.0	1.0	1.0
Reduce Gap By	0.0	0.0	0.0	0.0	0.0	0.0	0.0	0.0
Reduce Every	1.0	0.0	1.0	0.0	0.0	0.0	1.0	1.0
Yellow	5.0	5.2	5.0	4.1	3.0	5.2	5.0	5.0
All-Red	1.0	1.0	1.0	1.0	1.0	1.0	1.0	1.0
Ped/Bike (2-3)	**-1-**	**-2-**	**-3-**	**-4-**	**-5-**	**-6-**	**-7-**	**-8-**
--- Walk 2 ---	0	0	0	0	0	0	0	0
Delay/Early Walk	0	0	0	0	0	0	0	0
Solid Don't Walk	0	0	0	0	0	0	0	0
Bike Green	0	0	0	0	0	0	0	0
Bike All-Red	0.0	0.0	0.0	0.0	0.0	0.0	0.0	0.0

OVERLAP TIMING

Overlap (2-4)	A	B	C	D	E	F
Green	0.0	0.0	0.0	0.0	0.0	0.0
Yellow	5.0	5.0	5.0	5.0	5.0	5.0
Red	0.0	0.0	0.0	0.0	0.0	0.0

Red Revert

Red Revert (2-5)	
Time	5.0
All-Red Sec/Min (2-6)	
All-Red Sec/Min:	SEC

Max 2 Extension

Max/Gap Out (2-7)	
Max Cnt	0
Gap Cnt	0

Local Plan 1...9 (7-1) TIMING DATA

COORDINATION

[Offsets] Green Factors or Press [F] to Select Force-Off

	*	Cycle	Multi	Perm	A	B	C	-1-	-2-	-3-	-4-	-5-	-6-	-7-	-8-
Plan 1	Green Factor	120							61		46	36	20		
Plan 2	Green Factor	120							62		45	37	20		
Plan 3	Green Factor	120							65		42	36	24		
Plan 4	Green Factor														
Plan 5	Green Factor														
Plan 6	Green Factor														
Plan 7	Green Factor														
Plan 8	Green Factor														
Plan 9	Green Factor														

Master Timer Sync (7-A)	
Enable in Plans	
1-9	. . . . .
11-19	. . . . .
21-29	. . . . .

Master Sub Master	
Input	
Output	

FREE PLAN PHASE FLAGS

(7-E) Free	
Lag	Omit
. 2 . 4 . 6 . 8	. . . . .
Veh Min	Veh Max
. 2 . . . 6 . .	. . . . .
Ped	Bike
. . . . .	. . . . .
Cond	Cond Grn
. . . . .	10

Local Plan 1...9 (7-1) PHASE FLAGS

	Lag	Sync	Hold	Omit	Veh Min	Veh Max	Ped	Bike
Plan 1	. 2 . 4 . 6 . 8	. 2 . . . 6 . .	. . . . .	. . . . .	. . . . 5 . . .	. . . 4	. . . . .	. . . . .
Plan 2	. 2 . 4 . 6 . 8	. 2 . . . 6 . .	. . . . .	. . . . .	. . . . 5 . . .	. . . 4	. . . . .	. . . . .
Plan 3	. 2 . 4 . 6 . 8	. 2 . . . 6 . .	. . . . .	. . . . .	. . . . 5 . . .	. . . 4	. . . . .	. . . . .
Plan 4	. . . . .	. . . . .	. . . . .	. . . . .	. . . . .	. . . . .	. . . . .	. . . . .
Plan 5	. . . . .	. . . . .	. . . . .	. . . . .	. . . . .	. . . . .	. . . . .	. . . . .
Plan 6	. . . . .	. . . . .	. . . . .	. . . . .	. . . . .	. . . . .	. . . . .	. . . . .
Plan 7	. . . . .	. . . . .	. . . . .	. . . . .	. . . . .	. . . . .	. . . . .	. . . . .
Plan 8	. . . . .	. . . . .	. . . . .	. . . . .	. . . . .	. . . . .	. . . . .	. . . . .
Plan 9	. . . . .	. . . . .	. . . . .	. . . . .	. . . . .	. . . . .	. . . . .	. . . . .

MANUAL COMMANDS

Manual Plan (4-1)	
Plan	OffSet
	A

Plan: 1-9
15 or 254 = Flash
14 or 255 = Free
Offset A, B, or C

Special Function Override (4-2)			
#	Control	#	Control
1	NORMAL	3	NORMAL
2	NORMAL	4	NORMAL

Detector Reset	(4-3)
Local Manual (4-4)	OFF

Local Plan 11...19 (7-2) TIMING DATA COORDINATION

[Offsets] Green Factors or Press [F] to Select Force-Off

		Cycle	Multi	Perm	A	B	C	-1-	-2-	-3-	-4-	-5-	-6-	-7-	-8-
Plan 11	Green Factor														
Plan 12	Green Factor														
Plan 13	Green Factor														
Plan 14	Green Factor														
Plan 15	Green Factor														
Plan 16	Green Factor														
Plan 17	Green Factor														
Plan 18	Green Factor														
Plan 19	Green Factor														

Local Plan 11...19 (7-2) PHASE FLAGS

	Lag	Sync	Hold	Omit	Veh Min	Veh Max	Ped	Bike
Plan 11	.....	.....	.....	.....	.....	.....	.....	.....
Plan 12	.....	.....	.....	.....	.....	.....	.....	.....
Plan 13	.....	.....	.....	.....	.....	.....	.....	.....
Plan 14	.....	.....	.....	.....	.....	.....	.....	.....
Plan 15	.....	.....	.....	.....	.....	.....	.....	.....
Plan 16	.....	.....	.....	.....	.....	.....	.....	.....
Plan 17	.....	.....	.....	.....	.....	.....	.....	.....
Plan 18	.....	.....	.....	.....	.....	.....	.....	.....
Plan 19	.....	.....	.....	.....	.....	.....	.....	.....

Local Plan 21...29 (7-3) TIMING DATA

COORDINATION

[Offsets] Green Factors or Press [F] to Select Force-Off

		Cycle	Multi	Perm	A	B	C	-1-	-2-	-3-	-4-	-5-	-6-	-7-	-8-
Plan 21	Green Factor														
Plan 22	Green Factor														
Plan 23	Green Factor														
Plan 24	Green Factor														
Plan 25	Green Factor														
Plan 26	Green Factor														
Plan 27	Green Factor														
Plan 28	Green Factor														
Plan 29	Green Factor														

Local Plan 21...29 (7-3) PHASE FLAGS

	Lag	Sync	Hold	Omit	Veh Min	Veh Max	Ped	Bike
Plan 21	.....	.....	.....	.....	.....	.....	.....	.....
Plan 22	.....	.....	.....	.....	.....	.....	.....	.....
Plan 23	.....	.....	.....	.....	.....	.....	.....	.....
Plan 24	.....	.....	.....	.....	.....	.....	.....	.....
Plan 25	.....	.....	.....	.....	.....	.....	.....	.....
Plan 26	.....	.....	.....	.....	.....	.....	.....	.....
Plan 27	.....	.....	.....	.....	.....	.....	.....	.....
Plan 28	.....	.....	.....	.....	.....	.....	.....	.....
Plan 29	.....	.....	.....	.....	.....	.....	.....	.....

DETECTORS

Detector Attributes (5-1)				Slot	Detector Configuration (5-2)				
Det	Type	Phases	Lock		Det	Delay	Extend	Recall	Port
1	COUNT+CALL+EXTEND	1	NO	I1U	1			10	3.2
2	COUNT+CALL+EXTEND	1	NO	I1L	2			10	7.2
3	COUNT+CALL+EXTEND	. 2	NO	I2U	3			10	1.1
4	COUNT+CALL+EXTEND	. 2	NO	I2L	4			10	1.5
5	COUNT+CALL+EXTEND	. 2	NO	I3U	5			10	4.5
6	CALL+EXTEND	. 2	NO	I3L	6			10	6.2
7	LIMITED	. 2	NO	I4U	7			10	2.1
8	COUNT+CALL+EXTEND	. 2	NO	I4L	8			10	7.4
9	COUNT+CALL+EXTEND	. . 3	NO	I5U	9			10	3.4
10	COUNT+CALL+EXTEND	. . 3	NO	I5L	10			10	7.6
11	COUNT+CALL+EXTEND	. . . 4 . . .	NO	I6U	11			10	1.3
12	COUNT+CALL+EXTEND	. . . 4 . . .	NO	I6L	12			10	1.7
13	COUNT+CALL+EXTEND	. . . 4 . . .	NO	I7U	13			10	4.7
14	CALL+EXTEND	. . . 4 . . .	NO	I7L	14			10	6.4
15	LIMITED	. . . 4 . . .	NO	I8U	15			10	2.3
16	COUNT+CALL+EXTEND	. . . 4 . . .	NO	I8L	16			10	7.8
17	COUNT+CALL+EXTEND	1	NO	I9U	17			10	3.6
18	COUNT+CALL+EXTEND	. . 3	NO	I9L	18			10	3.8
19	COUNT+CALL+EXTEND	. 2	NO	I10U	19			10	4.1
20	COUNT+CALL+EXTEND	. . . 4 . . .	NO	I10L	20			10	4.2
21	COUNT+CALL+EXTEND	. . . . 5 . .	NO	J1U	21			10	3.1
22	COUNT+CALL+EXTEND	. . . . 5 . .	NO	J1L	22			10	7.1
23	COUNT+CALL+EXTEND	. . . . . 6 .	NO	J2U	23			10	1.2
24	COUNT+CALL+EXTEND	. . . . . 6 .	NO	J2L	24			10	1.6
25	COUNT+CALL+EXTEND	. . . . . 6 .	NO	J3U	25			10	4.6
26	COUNT+CALL+EXTEND	. . . . . 6 .	NO	J3L	26			10	6.3
27	COUNT+CALL+EXTEND	. . . . . 6 .	NO	J4U	27			10	2.2
28	COUNT+CALL+EXTEND	. . . . . 6 .	NO	J4L	28			10	7.3
29	COUNT+CALL+EXTEND	. . . . . 7 .	NO	J5U	29			10	3.3
30	COUNT+CALL+EXTEND	. . . . . 7 .	NO	J5L	30			10	7.5
31	COUNT+CALL+EXTEND	 8	NO	J6U	31			10	1.4
32	COUNT+CALL+EXTEND	 8	NO	J6L	32			10	1.8
33	COUNT+CALL+EXTEND	 8	NO	J7U	33			10	4.8
34	CALL+EXTEND	 8	NO	J7L	34			10	6.5
35	COUNT+CALL+EXTEND	 8	NO	J8U	35			10	2.4
36	COUNT+CALL+EXTEND	 8	NO	J8L	36			10	7.7
37	COUNT+CALL+EXTEND	. . . . 5 . .	NO	J9U	37			10	3.5
38	COUNT+CALL+EXTEND	. . . . . 7 .	NO	J9L	38			10	3.7
39	COUNT+CALL+EXTEND	. . . . . 6 .	NO	J10U	39			10	4.3
40	COUNT+CALL+EXTEND	 8	NO	J10L	40			10	4.4
41	PEDESTRIAN	. 2	NO	I 12U	41			10	5.1
42	PEDESTRIAN	. . . 4 . . .	NO	I 12L	42			10	5.3
43	PEDESTRIAN	. . . . . 6 .	NO	I 13U	43			10	5.2
44	PEDESTRIAN	 8	NO	I 13L	44			10	5.4

Failure Times(5-3)	Minutes
Maximum On Time	
Fail Reset Time	

Failure Override (5-4)	
Detectors 1-8	. . . . .
Detectors 9-16	. . . . .
Detectors17-24	. . . . .
Detectors 25-32	. . . . .
Detectors 33-40	. . . . .
Detectors 41-44	. . . . .

System Detector Assignment (5-5)								
Sys Det	1	2	3	4	5	6	7	8
Det Num								
Sys Det	9	10	11	12	13	14	15	16
Det Num								

CIC Operation (5-6-1)	
Enable in Plans	. . . . .

CIC Values (5-6-2)	Volume	Occupancy	Demand
Smoothing	0.66	0.66	0.66
Multiplier	4.0	0.33	
Exponent	0.50	1.00	

Detector-to-Phase Assignment (5-6-3)								
Sys Det	1	2	3	4	5	6	7	8
Phase								
Sys Det	9	10	11	12	13	14	15	16
Phase								

Input File Port-Bit Assignments

332 Cabinet - For Reference Only

	1	2	3	4	5	6	7	8	9	10	11	12	13	14
I-	3.2	1.1	4.5	2.1	3.4	1.3	4.7	2.3	3.6	4.1	6.6	5.1	5.2	6.7
	7.2	1.5	6.2	7.4	7.6	1.7	6.4	7.8	3.8	4.2	2.7	5.3	5.4	6.8
J-	3.1	1.2	4.6	2.2	3.3	1.4	4.8	2.4	3.5	4.3	2.8	5.5	5.6	2.5
	7.1	1.6	6.3	7.3	7.5	1.8	6.5	7.7	3.7	4.4	6.1	5.7	5.8	2.6

TOD SCHEDULE

Table 1 (8-2-1) *		
Time	Plan	OS
0500	1	A
1000	2	A
1500	3	A
2200	255	A
		A
		A
		A
		A
		A
		A
		A
		A
		A
		A
		A
		A
		A

Table 2 (8-2-2)		
Time	Plan	OS
		A
		A
		A
		A
		A
		A
		A
		A
		A
		A
		A
		A
		A
		A
		A
		A
		A

Table 3 (8-2-3)		
Time	Plan	OS
		A
		A
		A
		A
		A
		A
		A
		A
		A
		A
		A
		A
		A
		A
		A
		A
		A

Table 4 (8-2-4)		
Time	Plan	OS
		A
		A
		A
		A
		A
		A
		A
		A
		A
		A
		A
		A
		A
		A
		A
		A
		A

Table 5 (8-2-5)		
Time	Plan	OS
		A
		A
		A
		A
		A
		A
		A
		A
		A
		A
		A
		A
		A
		A
		A
		A
		A

Table 6 (8-2-6)		
Time	Plan	OS
		A
		A
		A
		A
		A
		A
		A
		A
		A
		A
		A
		A
		A
		A
		A
		A
		A

WEEKDAY ASSIGNMENT

Weekday Table Assignments (8-2-7)						
Mon	Tue	Wed	Thu	Fri	Sat	Sun
1	1	1	1	1	2	2

HOLIDAY TABLES

Floating Holiday Table (8-2-8)

#	Mnth	Week	DOW	Table
1			.....	
2			.....	
3			.....	
4			.....	
5			.....	
6			.....	
7			.....	
8			.....	
9			.....	
10			.....	
11			.....	
12			.....	
13			.....	
14			.....	
15			.....	
16			.....	

Fixed Holiday Table (8-2-9)

#	Mnth	Day	DOW	Table
1			.....	
2			.....	
3			.....	
4			.....	
5			.....	
6			.....	
7			.....	
8			.....	
9			.....	
10			.....	
11			.....	
12			.....	
13			.....	
14			.....	
15			.....	
16			.....	

Solar Clock Data (8-4)

North Latitude	34
West Longitude	118
Local Time Zone	8

Sabbatical Clock (8-5)

Hebrew	Ped Recall
Sabbath	.....
Holiday	.....

Daylight Saving (8-6)

Enabled	YES

TOD FUNCTIONS

TOD Functions (8-3)

#	Start	End	DOW	Action	Phases
1			.....		.....
2			.....		.....
3			.....		.....
4			.....		.....
5			.....		.....
6			.....		.....
7			.....		.....
8			.....		.....
9			.....		.....
10			.....		.....
11			.....		.....
12			.....		.....
13			.....		.....
14			.....		.....
15			.....		.....
16			.....		.....

Action Codes:

0. None
1. Permitted
2. Restricted
4. Veh Min Recall
5. Veh Max Recall
6. Ped Recall
7. Bike Recall
8. Red Lock
9. Yellow Lock
10. Force/Max Lock
11. Double Entry
12. Y-Coord C
13. Y-Coord D
14. Free
15. Flashing
16. Walk 2
17. Max Green 2
18. Max Green 3
19. Rest in Walk
20. Rest in Red
21. Free Lag Phases
22. Special Functions
23. Truck Preempt
24. Conditional Service
25. Conditional Service
26. Leading Ped
27. Traffic Actuated Max 2
41. Protected Permissive
42. Protected Permissive

Action Code = Phases added to normal setting

100+Action Code = Phases removed

200+Action Code = Phases replaced

COMMUNICATIONS

C2 (6-1-1)	*
Address	2
Protocol	AB3418
Limit Access	
Baud	1200
Parity	NONE
Data Bits	8
Stop Bits	1
RTS On Time	20
RTS Off Time	20
Handshaking	NORMAL

C20 (6-1-2)	
Address	
Protocol	AB3418
Limit Access	
Baud	1200
Parity	NONE
Data Bits	8
Stop Bits	1
RTS On Time	20
RTS Off Time	20
Handshaking	NORMAL

C21 (6-1-3)	
Address	
Protocol	AB3418
Limit Access	
Baud	1200
Parity	NONE
Data Bits	8
Stop Bits	1
RTS On Time	20
RTS Off Time	20
Handshaking	NORMAL

Limit Access:

0-None
1-Status Only
2-Status, Set Pattern, Time
3-Status, Set Pattern, Time, Manual Plan

SOFT LOGIC

Soft Logic (6-2)

#	Data	OP	Data	OP	Data	OP	Data
1							
2							
3							
4							
5							
6							
7							
8							
9							
10							
11							
12							
13							
14							
15							
16							

*Refer to User's Manual for Data and OP Codes

CALLBACK NUMBERS

Callback Numbers (6-3...3)	
Line Out	
Local Toll	
Long Distance	
Delay	10
Area Code	
Phone Number	

Line Out	
Local Toll	
Long Distance	
Delay	10
Area Code	
Phone Number	

Line Out	
Local Toll	
Long Distance	
Delay	10
Area Code	
Phone Number	

NETWORK

Network (6-4)	*
Address	
Protocol	AB3418
Port	27000
IP Mode	STATIC

IP Address	10	.	20	.	70	.	51
Netmask	255	.	255	.	255	.	0
Broadcast	10	.	20	.	70	.	255
Gateway	10	.	20	.	70	.	255

RAILROAD PREEMPTION

RR 1

(3-1-1)	Timing	Phase Flags (3-1-2)			Pedestrian Flags (3-1-3)			Overlap Flags (3-1-4)		
Delay		Grn Hold	Yel Flash	Red Flash	Walk	Flash DW	Solid DW	Grn Hold	Yel Flash	Red Flash
Clear 1	10	. 2 . . 5 . . .	. . . .	. . . .	. . . .	. . . .	. 2 . 4 . 6 . 8	. . . . . .	. . . . . .	. . . . . .
Clear 2		. . . .	. . . .	. . . .	. . . .	. . . .	. . . .	. . . . . .	. . . . . .	. . . . . .
Clear 3		. . . .	. . . .	. . . .	. . . .	. . . .	. . . .	. . . . . .	. . . . . .	. . . . . .
Hold		. . . .	. . . .	1 2 3 4 5 6 7 8	. . . .	. . . .	. . . .	. . . . . .	. . . . . .	A B C D E F
Exit	5									
Min Grn										
Ped Clr										

Exit Parameters (3-1-5)			
Phase Green	Overlap Green	Vehicle Recall	Ped Call
. . . .	. . . . . .	1 2 3 4 5 6 7 8	. 2 . 4 . 6 . 8

Configuration (3-1-6)			
Port	Gate Port	Latching	Power-Up
2.5	0.0	YES	FLASHING

RR 2

(3-2-1)	Timing	Phase Flags (3-2-2)			Pedestrian Flags (3-2-3)			Overlap Flags (3-2-4)		
Delay		Grn Hold	Yel Flash	Red Flash	Walk	Flash DW	Solid DW	Grn Hold	Yel Flash	Red Flash
Clear 1	10	. . . 4 . . 7 .	. . . .	. . . .	. . . .	. . . .	. 2 . 4 . 6 . 8	. . . . . .	. . . . . .	. . . . . .
Clear 2		. . . .	. . . .	. . . .	. . . .	. . . .	. . . .	. . . . . .	. . . . . .	. . . . . .
Clear 3		. . . .	. . . .	. . . .	. . . .	. . . .	. . . .	. . . . . .	. . . . . .	. . . . . .
Hold		1 2 3 . . 6 . .	. . . .	. . . .	. 2 . . . 6 . .	. . . .	. . . 4 . . . 8	. . . . . .	. . . . . .	. . . . . .
Exit										
Min Grn										
Ped Clr										

Exit Parameters (3-2-5)			
Phase Green	Overlap Green	Vehicle Recall	Ped Recall
. . . .	. . . . . .	. . . 4 . . 7 .	. . . .

Configuration (3-2-6)			
Port	Gate Port	Latching	Power-up
2.6	0.0	YES	DARK

EMERGENCY VEHICLE PREEMPTION

EVA (3-A)

Preempt Timers			Phase Green	Overlap Green
Delay	Clear	Max		
	30	30	. 2 . . 5 . . .	. . . . . .

Port	Latching	Phase Termination
5.5	NO	ADVANCE

EVB (3-B)

Preempt Timers			Phase Green	Overlap Green
Delay	Clear	Max		
	30	30	. . . 4 . . 7 .	. . . . . .

Port	Latching	Phase Termination
5.6	NO	ADVANCE

EVC (3-C)

Preempt Timers			Phase Green	Overlap Green
Delay	Clear	Max		
	30	30	1 . . . . 6 . .	. . . . . .

Port	Latching	Phase Termination
5.7	NO	ADVANCE

EVD (3-D)

Preempt Timers			Phase Green	Overlap Green
Delay	Clear	Max		
	30	30	. . 3 8	. . . . . .

Port	Latching	Phase Termination
5.8	NO	ADVANCE

INPUTS

		7 Wire I/C (2-1-5-1)			
		Input	Port	Input	Port
Enable	NO	R1	3.8	Free	3.6
Max ON		R2	3.5	D2	2.8
Max OFF		R3	3.7	D3	6.1

Manual Control (2-1-5-2) *	
Input	Port
Manual Advance	0.0
Advance Enable	0.0

Cabinet Status (2-1-5-3)	
Input	Port
Flash Bus	
Door Ajar	
Flash Sense	6.7
Stop Time	6.8

Special Function (2-1-5-4)	
Input	Port
1	
2	
3	
4	

Battery Backup (2-1-5-5) *	
Port	Operation
2.7	FLASHING

Y-Coordination (2-1-5-6)	
Port C	Port D
6.1	2.8

OUTPUTS

Loadswitch Assignments (2-1-6) +							
A	1	2	22	3	4	24	9
B	5	6	26	7	8	28	10
X	13	14	0	11	12	0	0

Loadswitch Codes:

0 Unused (no output)
1-8 Vehicle 1-8
9-14 Overlap A-F
21-28 Ped 1-8
41-47 Special Functions
41 Protected Permissive Flashing Phase 1
43 Protected Permissive Flashing Phase 3
45 Protected Permissive Flashing Phase 5
47 Protected Permissive Flashing Phase 7
51-57 Special Functions
71-72 Seven Wire I/C

+ middle output of loadswitches 3 and 6
Channel 9 and 10

YELLOW YIELD COORDINATION

					Force-Offs											
Y-Coord Plans (7-C,D)	Long Grn	No Grn	Offset	Perm	-1-	-2-	-3-	-4-	-5-	-6-	-7-	-8-	Coord	Lag	Min Recall	Restricted
Plan C													. 2 . . . 6 . .	. 2 . 4 . 6 . 8	. . . . .	. . . . .
Plan D													. 2 . . . 6 . .	. 2 . 4 . 6 . 8	. . . . .	. . . . .

TRANSIT PRIORITY

Local Plans (3-E) 1...9 11...19		Early Green	Green Extend	Inhibit Cycles	Phase 1 Minimum	Phase 2 Minimum	Phase 3 Minimum	Phase 4 Minimum	Phase 5 Minimum	Phase 6 Minimum	Phase 7 Minimum	Phase 8 Minimum
Plan 1	Green Factor											
Plan 2	Green Factor											
Plan 3	Green Factor											
Plan 4	Green Factor											
Plan 5	Green Factor											
Plan 6	Green Factor											
Plan 7	Green Factor											
Plan 8	Green Factor											
Plan 9	Green Factor											
Plan 11	Green Factor											
Plan 12	Green Factor											
Plan 13	Green Factor											
Plan 14	Green Factor											
Plan 15	Green Factor											
Plan 16	Green Factor											
Plan 17	Green Factor											
Plan 18	Green Factor											
Plan 19	Green Factor											

Transit Priority Configuration (3-E-A)				Indicator Output	
Enable in Plans		Input	Type	Stop	Go
Plan 1-9	. . . . .	0.0	OPT	0	0
Plan 11-19	. . . . .	0.0	OPT	0	0

Queue Jump (3-E-B)	
Grn Hold	Hold Phase
	. . . . .
	. . . . .

Free Plans (3-E-E)	
Max Grn Hold	Hold Phase
	. . . . .

Access Utilities (9-5)	
Password	***
Timeout	30

TRUCK PRIORITY

Truck Priority (3-F)	Passage	CarryOver	Clearance	Next Priority	Phase Green	Det 2 Port	Det 3 Port	Det 4 Port	Sign Output	Slave Input	Slave Output
					. . . . .	0.0	0.0	0.0	0	0.0	0

Ontario, CA

ECONOLITE CONTROL. PRODUCTS, INC.

Solutions that Move the World' Trvl

Milliken Ave @ Guasti - 10.211.51.11 - ASC3 - Econolite Type - ASC/3

Configuration Controller Sequence

Phase Ring Sequence.....(Note: Sequences identical to the prior one are not printed)

	01	02	03	04	05	06	07	08	09	10	11	12	13	14	15	16
	B		B		B		B		B							
Sequence 1																
Ring 1	1	2	3	4	9	10	13	14	.	.	.	.	.	.	.	.
Ring 2	5	6	7	8	11	12	15	16	.	.	.	.	.	.	.	.
Sequence 2																
Ring 1	2	1	3	4	10	9	13	14	.	.	.	.	.	.	.	.
Ring 2	5	6	7	8	11	12	15	16	.	.	.	.	.	.	.	.
Sequence 3																
Ring 1	1	2	4	3	9	10	14	13	.	.	.	.	.	.	.	.
Ring 2	5	6	7	8	11	12	15	16	.	.	.	.	.	.	.	.
Sequence 4																
Ring 1	2	1	4	3	10	9	14	13	.	.	.	.	.	.	.	.
Ring 2	5	6	7	8	11	12	15	16	.	.	.	.	.	.	.	.
Sequence 5																
Ring 1	1	2	3	4	9	10	13	14	.	.	.	.	.	.	.	.
Ring 2	6	5	7	8	12	11	15	16	.	.	.	.	.	.	.	.
Sequence 6																
Ring 1	2	1	3	4	10	9	13	14	.	.	.	.	.	.	.	.
Ring 2	6	5	7	8	12	11	15	16	.	.	.	.	.	.	.	.
Sequence 7																
Ring 1	1	2	4	3	9	10	14	13	.	.	.	.	.	.	.	.
Ring 2	6	5	7	8	12	11	15	16	.	.	.	.	.	.	.	.
Sequence 8																
Ring 1	2	1	4	3	10	9	14	13	.	.	.	.	.	.	.	.
Ring 2	6	5	7	8	12	11	15	16	.	.	.	.	.	.	.	.
Sequence 9																
Ring 1	1	2	3	4	9	10	13	14	.	.	.	.	.	.	.	.
Ring 2	5	6	8	7	11	12	16	15	.	.	.	.	.	.	.	.
Sequence 10																
Ring 1	2	1	3	4	10	9	13	14	.	.	.	.	.	.	.	.
Ring 2	5	6	8	7	11	12	16	15	.	.	.	.	.	.	.	.
Sequence 11																
Ring 1	1	2	4	3	9	10	14	13	.	.	.	.	.	.	.	.
Ring 2	5	6	8	7	11	12	16	15	.	.	.	.	.	.	.	.
Sequence 12																
Ring 1	2	1	4	3	10	9	14	13	.	.	.	.	.	.	.	.
Ring 2	5	6	8	7	11	12	16	15	.	.	.	.	.	.	.	.
Sequence 13																
Ring 1	1	2	3	4	9	10	13	14	.	.	.	.	.	.	.	.
Ring 2	6	5	8	7	12	11	16	15	.	.	.	.	.	.	.	.
Sequence 14																
Ring 1	2	1	3	4	10	9	13	14	.	.	.	.	.	.	.	.
Ring 2	6	5	8	7	12	11	16	15	.	.	.	.	.	.	.	.
Sequence 15																
Ring 1	1	2	4	3	9	10	14	13	.	.	.	.	.	.	.	.
Ring 2	6	5	8	7	12	11	16	15	.	.	.	.	.	.	.	.
Sequence 16																
Ring 1	2	1	4	3	10	9	14	13	.	.	.	.	.	.	.	.
Ring 2	6	5	8	7	12	11	16	15	.	.	.	.	.	.	.	.

Phase	1	2	3	4	5	6	7	8	9	10	11	12	13	14	15	16

Hardware Alternate Sequence Enable: No

Ontario, CA

ECONOLITE CONTROL. PRODUCTS, INC.

Solutions that Move the World' Trvl

Milliken Ave @ Guasti - 10.211.51.11 - ASC3 - Econolite Type - ASC/3

Configuration Port 1 (SDLC)

Port 1 SDLC (MM) 1-4-1

BIU	1	2	3	4	5	6	7	8
Term & Facility								
Detector Rack								

Enable TS2/MMU Type Cabinet: No
Enable MMU Extended Status: No
Enable SDLC Stop Time: No
Enable 3 Critical RFE's Lockup: Yes

MMU Program (MM) 1-4-2

Channel Can Serve With Channel	
Channel 1	**Channel 2**

Color Check Enable (MM) 1-4-3

Enable Color Check: Yes

MMU/LS	1	2	3	4	5	6	7	8	9	10	11	12	13	14	15	16
Green																
Yellow																
Red																

Secondary Stations/Tests (MM) 1-4-4

ID	1	2	3	4	5	6	7	8	MMU
Term & Facility									

ID	1	2	3	4	5	6	7	8	Diag
Detector Rack									

Enable SDLC Diagnostic Test: No

Ontario, CA

ECONOLITE CONTROL. PRODUCTS, INC.

Solutions that Move the World' Trvl

Milliken Ave @ Guasti - 10.211.51.11 - ASC3 - Econolite Type - ASC/3

Configuration Communications 1 (SDLC)

Ethernet Port Configuration (MM) 1-5-1

Controller IP:	10.211.51.11
Subnet Mask:	255.255.255.0
Default Gateway IP:	10.211.51.1
Server IP:	10.10.5.28

NTCIP (MM) 1-5-5

NTCIP Backup Time (Sec):	0
NTCIP UDP Port:	501
Ethernet Priority:	1
Port 2 Priority (Port C50S for 2070):	4
Port 3A Priority (Port C21S for 2070):	2
Port 3B Priority (Port C22S for 2070):	3

Port Configuration (MM) 1-5-2 to 1-5-4

Port	2 (C50S)	3A (C21S)	3B (C22S)
Protocol	TERMINAL	NTCIP	ECPIP
Enable	Yes	No	No
Data Rate (BPS)	57.6K	9600	1200
Data, Parity, Stop	8 N 1	8 N 1	8 O 1
Address	0	1	1
Telemetry Response Delay	0.0	0.0	0.9
Duplex - Half or Full	Full	Full	Full
Flow Control	No	Yes	Yes
Group Address	0	0	0
Single Flag Enable	Yes	Yes	Yes
RTS to CTS Delay	n/a	n/a	3.0
RTS Turn Off Delay	n/a	n/a	2.0
Dropout Time	10	10	300
Early RTS	n/a	n/a	No
Telemetry Mode	n/a	n/a	FSK
ATCS Railroad	0	n/a	n/a
ATCS Railroad Line	0	n/a	n/a
ATCS Group	0	n/a	n/a
Wayside Device	0	n/a	n/a
ATC Device	0	n/a	n/a
Wayside Subnode	0	n/a	n/a
ATC Subnode	0	n/a	n/a

ECPIP (MM) 1-5-6

Controller Address:	1
Expanded System Detector Address:	0

System Detector Assignment

System Detector	Local Detector

Ontario, CA

ECONOLITE CONTROL. PRODUCTS, INC.

Solutions that Move the World' Trvl

Milliken Ave @ Guasti - 10.211.51.11 - ASC3 - Econolite Type - ASC/3

Configuration Logging / Display

Event Logging (MM) 1-6-1

Critical RFE's (MMU/TF)	Yes	3 Critical Errors Within 24 Hours	Yes
MMU Flash Faults	Yes	Local Flash Fault	Yes
Non-Critical RFE's (Det/Test)	Yes	Detector Errors	Yes
Coordination Errors	Yes	Controller Download	Yes
Preemption Events	Yes	TSP Events	Yes
Power On/Off	Yes	Low Battery	Yes
Access	Yes	Data Change	Yes
Online / Offline	Yes		

Alarm Event	1	2	3	4	5	6	7	8	9	10	11	12	13	14	15	16
Enable Logging	X	X	X	X	X	X	X	X	X	X	X	X	X	X	X	X

Display Options (MM) 1-7-2

Key Click Enable:	Yes
Backlight Enable:	Yes
LED Mode:	Auto
Display Mode:	Advanced
Screen Format:	Advanced
Trans Mode Pop-Up Disable:	No

Sign On (MM) 8-5

Sign On Message Line 1: Solutions that Move the World
Sign On Message Line 2:

Software Modules (MM) 8-7

Application Version: 02.57.00
OS (Boot) Version: 01.14.03

Ontario, CA

ECONOLITE CONTROL. PRODUCTS, INC.

Solutions that Move the World' Trvl

Milliken Ave @ Guasti - 10.211.51.11 - ASC3 - Econolite Type - ASC/3

Logic Processor Page 1

Logic Statement Control (MM) 1-8-1

Logic #	Statement Control

Ontario, CA

ECONOLITE CONTROL. PRODUCTS, INC.

Solutions that Move the World' Trvl

Milliken Ave @ Guasti - 10.211.51.11 - ASC3 - Econolite Type - ASC/3

Logic Processor Page 2

Logic Statements (MM) 1-8-2

Ontario, CA

IB ECONOUTE CONTROL. PRODUCTS. INC.

Solutions that Move the World Trvl

Milliken Ave @ Guasti - 10.211.51.11 - ASC3 - Econolite Type - ASC/3

Controller Timing Plan (MM) 2-1

Plan 1

Phase	1	2	3	4	5	6	7	8	9	10	11	12	13	14	15	16
Direction																
Min Green	8	8	11	11	8	8	11	11	0	0	0	0	0	0	0	0
Bk Min Green	8	8	11	11	8	8	11	11	0	0	0	0	0	0	0	0
CS Min Green	0	0	0	0	0	0	0	0	0	0	0	0	0	0	0	0
Delay Green	0	0	0	0	0	0	0	0	0	0	0	0	0	0	0	0
Walk	0	5	0	0	0	5	0	5	0	0	0	0	0	0	0	0
Walk2	0	0	0	0	0	0	0	0	0	0	0	0	0	0	0	0
Walk Max	0	0	0	0	0	0	0	0	0	0	0	0	0	0	0	0
Ped Clear	0	30	0	0	0	30	0	45	0	0	0	0	0	0	0	0
Ped Clear 2	0	0	0	0	0	0	0	0	0	0	0	0	0	0	0	0
Ped Clear Max	0	0	0	0	0	0	0	0	0	0	0	0	0	0	0	0
Ped CO	0	0	0	0	0	0	0	0	0	0	0	0	0	0	0	0
Vehicle Ext	4.0	4.5	4.0	4.0	4.0	4.5	4.0	4.0	0.0	0.0	0.0	0.0	0.0	0.0	0.0	0.0
Vehicle Ext 2	0.0	0.0	0.0	0.0	0.0	0.0	0.0	0.0	0.0	0.0	0.0	0.0	0.0	0.0	0.0	0.0
Max1	25	40	25	30	25	40	30	30	0	0	0	0	0	0	0	0
Max2	35	50	35	40	35	50	35	40	0	0	0	0	0	0	0	0
Max3	40	60	40	50	40	60	40	50	0	0	0	0	0	0	0	0
DYM Max	40	60	40	50	40	60	40	50	0	0	0	0	0	0	0	0
Dym Step	5.0	10.0	5.0	10.0	5.0	10.0	5.0	10.0	0.0	0.0	0.0	0.0	0.0	0.0	0.0	0.0
Yellow	5.0	5.0	4.5	4.5	5.0	5.0	4.5	4.5	0.0	0.0	0.0	0.0	0.0	0.0	0.0	0.0
Red Clear	2.0	2.0	2.0	2.0	2.0	2.0	2.0	2.0	0.0	0.0	0.0	0.0	0.0	0.0	0.0	1.0
Red Max	0.0	0.0	0.0	0.0	0.0	0.0	0.0	0.0	0.0	0.0	0.0	0.0	0.0	0.0	0.0	0.0
Red Revert	2.0	2.0	2.0	2.0	2.0	2.0	2.0	2.0	2.0	2.0	2.0	2.0	2.0	2.0	2.0	2.0
Act B4	0	0	0	0	0	0	0	0	0	0	0	0	0	0	0	0
Sec/Act	0.0	0.0	0.0	0.0	0.0	0.0	0.0	0.0	0.0	0.0	0.0	0.0	0.0	0.0	0.0	0.0
Max Int	0	0	0	0	0	0	0	0	0	0	0	0	0	0	0	0
Time B4	0	0	0	0	0	0	0	0	0	0	0	0	0	0	0	0
Cars Wt	0	0	0	0	0	0	0	0	0	0	0	0	0	0	0	0
STPTDuc	0.0	0.0	0.0	0.0	0.0	0.0	0.0	0.0	0.0	0.0	0.0	0.0	0.0	0.0	0.0	0.0
TTReduc	0	0	0	0	0	0	0	0	0	0	0	0	0	0	0	0
Min Gap	0.0	0.0	0.0	0.0	0.0	0.0	0.0	0.0	0.0	0.0	0.0	0.0	0.0	0.0	0.0	0.0

Plan 2

Phase	1	2	3	4	5	6	7	8	9	10	11	12	13	14	15	16
Direction																
Min Green	5	5	5	5	5	5	5	5	5	5	5	5	5	5	5	5
Bk Min Green	0	0	0	0	0	0	0	0	0	0	0	0	0	0	0	0
CS Min Green	0	0	0	0	0	0	0	0	0	0	0	0	0	0	0	0
Delay Green	0	0	0	0	0	0	0	0	0	0	0	0	0	0	0	0
Walk	0	10	0	10	0	10	0	10	0	10	0	10	0	10	0	10
Walk2	0	0	0	0	0	0	0	0	0	0	0	0	0	0	0	0
Walk Max	0	0	0	0	0	0	0	0	0	0	0	0	0	0	0	0
Ped Clear	0	16	0	16	0	16	0	16	0	16	0	16	0	16	0	16
Ped Clear 2	0	0	0	0	0	0	0	0	0	0	0	0	0	0	0	0
Ped Clear Max	0	0	0	0	0	0	0	0	0	0	0	0	0	0	0	0
Ped CO	0	0	0	0	0	0	0	0	0	0	0	0	0	0	0	0
Vehicle Ext	5.0	5.0	5.0	5.0	5.0	5.0	5.0	5.0	5.0	5.0	5.0	5.0	5.0	5.0	5.0	5.0
Vehicle Ext 2	0.0	0.0	0.0	0.0	0.0	0.0	0.0	0.0	0.0	0.0	0.0	0.0	0.0	0.0	0.0	0.0
Max1	35	35	35	35	35	35	35	35	35	35	35	35	35	35	35	35
Max2	40	40	40	40	40	40	40	40	40	40	40	40	40	40	40	40
Max3	0	0	0	0	0	0	0	0	0	0	0	0	0	0	0	0
DYM Max	0	0	0	0	0	0	0	0	0	0	0	0	0	0	0	0
Dym Step	0.0	0.0	0.0	0.0	0.0	0.0	0.0	0.0	0.0	0.0	0.0	0.0	0.0	0.0	0.0	0.0
Yellow	3.0	3.0	3.0	3.0	3.0	3.0	3.0	3.0	3.0	3.0	3.0	3.0	3.0	3.0	3.0	3.0
Red Clear	1.0	1.0	1.0	1.0	1.0	1.0	1.0	1.0	1.0	1.0	1.0	1.0	1.0	1.0	1.0	1.0
Red Max	0.0	0.0	0.0	0.0	0.0	0.0	0.0	0.0	0.0	0.0	0.0	0.0	0.0	0.0	0.0	0.0

Red Revert	2.0	2.0	2.0	2.0	2.0	2.0	2.0	2.0	2.0	2.0	2.0	2.0	2.0	2.0	2.0	2.0
Act B4	0	0	0	0	0	0	0	0	0	0	0	0	0	0	0	0
Sec/Act	0.0	0.0	0.0	0.0	0.0	0.0	0.0	0.0	0.0	0.0	0.0	0.0	0.0	0.0	0.0	0.0
Max Int	0	0	0	0	0	0	0	0	0	0	0	0	0	0	0	0
Time B4	0	0	0	0	0	0	0	0	0	0	0	0	0	0	0	0
Cars Wt	0	0	0	0	0	0	0	0	0	0	0	0	0	0	0	0
STPTDuc	0.0	0.0	0.0	0.0	0.0	0.0	0.0	0.0	0.0	0.0	0.0	0.0	0.0	0.0	0.0	0.0
TTReduc	0	0	0	0	0	0	0	0	0	0	0	0	0	0	0	0
Min Gap	0.0	0.0	0.0	0.0	0.0	0.0	0.0	0.0	0.0	0.0	0.0	0.0	0.0	0.0	0.0	0.0

Plan 3

Phase	1	2	3	4	5	6	7	8	9	10	11	12	13	14	15	16
Direction																
Min Green	5	5	5	5	5	5	5	5	5	5	5	5	5	5	5	5
Bk Min Green	0	0	0	0	0	0	0	0	0	0	0	0	0	0	0	0
CS Min Green	0	0	0	0	0	0	0	0	0	0	0	0	0	0	0	0
Delay Green	0	0	0	0	0	0	0	0	0	0	0	0	0	0	0	0
Walk	0	10	0	10	0	10	0	10	0	10	0	10	0	10	0	10
Walk2	0	0	0	0	0	0	0	0	0	0	0	0	0	0	0	0
Walk Max	0	0	0	0	0	0	0	0	0	0	0	0	0	0	0	0
Ped Clear	0	16	0	16	0	16	0	16	0	16	0	16	0	16	0	16
Ped Clear 2	0	0	0	0	0	0	0	0	0	0	0	0	0	0	0	0
Ped Clear Max	0	0	0	0	0	0	0	0	0	0	0	0	0	0	0	0
Ped CO	0	0	0	0	0	0	0	0	0	0	0	0	0	0	0	0
Vehicle Ext	5.0	5.0	5.0	5.0	5.0	5.0	5.0	5.0	5.0	5.0	5.0	5.0	5.0	5.0	5.0	5.0
Vehicle Ext 2	0.0	0.0	0.0	0.0	0.0	0.0	0.0	0.0	0.0	0.0	0.0	0.0	0.0	0.0	0.0	0.0
Max1	35	35	35	35	35	35	35	35	35	35	35	35	35	35	35	35
Max2	40	40	40	40	40	40	40	40	40	40	40	40	40	40	40	40
Max3	0	0	0	0	0	0	0	0	0	0	0	0	0	0	0	0
DYM Max	0	0	0	0	0	0	0	0	0	0	0	0	0	0	0	0
Dym Step	0.0	0.0	0.0	0.0	0.0	0.0	0.0	0.0	0.0	0.0	0.0	0.0	0.0	0.0	0.0	0.0
Yellow	3.0	3.0	3.0	3.0	3.0	3.0	3.0	3.0	3.0	3.0	3.0	3.0	3.0	3.0	3.0	3.0
Red Clear	1.0	1.0	1.0	1.0	1.0	1.0	1.0	1.0	1.0	1.0	1.0	1.0	1.0	1.0	1.0	1.0
Red Max	0.0	0.0	0.0	0.0	0.0	0.0	0.0	0.0	0.0	0.0	0.0	0.0	0.0	0.0	0.0	0.0
Red Revert	2.0	2.0	2.0	2.0	2.0	2.0	2.0	2.0	2.0	2.0	2.0	2.0	2.0	2.0	2.0	2.0
Act B4	0	0	0	0	0	0	0	0	0	0	0	0	0	0	0	0
Sec/Act	0.0	0.0	0.0	0.0	0.0	0.0	0.0	0.0	0.0	0.0	0.0	0.0	0.0	0.0	0.0	0.0
Max Int	0	0	0	0	0	0	0	0	0	0	0	0	0	0	0	0
Time B4	0	0	0	0	0	0	0	0	0	0	0	0	0	0	0	0
Cars Wt	0	0	0	0	0	0	0	0	0	0	0	0	0	0	0	0
STPTDuc	0.0	0.0	0.0	0.0	0.0	0.0	0.0	0.0	0.0	0.0	0.0	0.0	0.0	0.0	0.0	0.0
TTReduc	0	0	0	0	0	0	0	0	0	0	0	0	0	0	0	0
Min Gap	0.0	0.0	0.0	0.0	0.0	0.0	0.0	0.0	0.0	0.0	0.0	0.0	0.0	0.0	0.0	0.0

Plan 4

Phase	1	2	3	4	5	6	7	8	9	10	11	12	13	14	15	16
Direction																
Min Green	5	5	5	5	5	5	5	5	5	5	5	5	5	5	5	5
Bk Min Green	0	0	0	0	0	0	0	0	0	0	0	0	0	0	0	0
CS Min Green	0	0	0	0	0	0	0	0	0	0	0	0	0	0	0	0
Delay Green	0	0	0	0	0	0	0	0	0	0	0	0	0	0	0	0
Walk	0	10	0	10	0	10	0	10	0	10	0	10	0	10	0	10
Walk2	0	0	0	0	0	0	0	0	0	0	0	0	0	0	0	0
Walk Max	0	0	0	0	0	0	0	0	0	0	0	0	0	0	0	0
Ped Clear	0	16	0	16	0	16	0	16	0	16	0	16	0	16	0	16
Ped Clear 2	0	0	0	0	0	0	0	0	0	0	0	0	0	0	0	0
Ped Clear Max	0	0	0	0	0	0	0	0	0	0	0	0	0	0	0	0
Ped CO	0	0	0	0	0	0	0	0	0	0	0	0	0	0	0	0
Vehicle Ext	5.0	5.0	5.0	5.0	5.0	5.0	5.0	5.0	5.0	5.0	5.0	5.0	5.0	5.0	5.0	5.0
Vehicle Ext 2	0.0	0.0	0.0	0.0	0.0	0.0	0.0	0.0	0.0	0.0	0.0	0.0	0.0	0.0	0.0	0.0
Max1	35	35	35	35	35	35	35	35	35	35	35	35	35	35	35	35
Max2	40	40	40	40	40	40	40	40	40	40	40	40	40	40	40	40
Max3	0	0	0	0	0	0	0	0	0	0	0	0	0	0	0	0
DYM Max	0	0	0	0	0	0	0	0	0	0	0	0	0	0	0	0
Dym Step	0.0	0.0	0.0	0.0	0.0	0.0	0.0	0.0	0.0	0.0	0.0	0.0	0.0	0.0	0.0	0.0
Yellow	3.0	3.0	3.0	3.0	3.0	3.0	3.0	3.0	3.0	3.0	3.0	3.0	3.0	3.0	3.0	3.0
Red Clear	1.0	1.0	1.0	1.0	1.0	1.0	1.0	1.0	1.0	1.0	1.0	1.0	1.0	1.0	1.0	1.0
Red Max	0.0	0.0	0.0	0.0	0.0	0.0	0.0	0.0	0.0	0.0	0.0	0.0	0.0	0.0	0.0	0.0
Red Revert	2.0	2.0	2.0	2.0	2.0	2.0	2.0	2.0	2.0	2.0	2.0	2.0	2.0	2.0	2.0	2.0
Act B4	0	0	0	0	0	0	0	0	0	0	0	0	0	0	0	0
Sec/Act	0.0	0.0	0.0	0.0	0.0	0.0	0.0	0.0	0.0	0.0	0.0	0.0	0.0	0.0	0.0	0.0
Max Int	0	0	0	0	0	0	0	0	0	0	0	0	0	0	0	0
Time B4	0	0	0	0	0	0	0	0	0	0	0	0	0	0	0	0
Cars Wt	0	0	0	0	0	0	0	0	0	0	0	0	0	0	0	0
STPTDuc	0.0	0.0	0.0	0.0	0.0	0.0	0.0	0.0	0.0	0.0	0.0	0.0	0.0	0.0	0.0	0.0
TTReduc	0	0	0	0	0	0	0	0	0	0	0	0	0	0	0	0
Min Gap	0.0	0.0	0.0	0.0	0.0	0.0	0.0	0.0	0.0	0.0	0.0	0.0	0.0	0.0	0.0	0.0

Ontario, CA

ECONOLITE CONTROL. PRODUCTS, INC.

Solutions that Move the World' Trvl

Milliken Ave @ Guasti - 10.211.51.11 - ASC3 - Econolite Type - ASC/3

Controller Overlaps

Vehicle Overlaps (MM) 2-2

Overlap	Type	Lag Green	Yellow	Red	Adv. Green

Phases

Overlap	Phase	Included	Protect	Ped Protect	Not Overlap	Modifier	Lag X Phases	Lag 2 Phases	Flash Green

PPLT FYA

Overlap	Protected Phase (Left Turn)	Permissive Phase (Opposing Thru)	Flashing Arrow Output	Flashing Arrow Output CH	Delay Start of FYA	Delay Start of Clearance	Action Plan SF Bit Disable	Ped Protected Enable

Guaranteed Minimum Time Data (MM) 2-4

Phase	Min Green	Walk	Ped Clear	Yellow	Red Clear	Overlap Green
A01	5	0	7	3.0	0.0	5
B02	5	0	7	3.0	0.0	5
C03	5	0	7	3.0	0.0	5
D04	5	0	7	3.0	0.0	5
E05	5	0	7	3.0	0.0	5
F06	5	0	7	3.0	0.0	5
G07	5	0	7	3.0	0.0	5
H08	5	0	7	3.0	0.0	5
I09	5	0	7	3.0	0.0	5
J10	5	0	7	3.0	0.0	5
K11	5	0	7	3.0	0.0	5
L12	5	0	7	3.0	0.0	5
M13	5	0	7	3.0	0.0	5
N14	5	0	7	3.0	0.0	5
O15	5	0	7	3.0	0.0	5
P16	5	0	7	3.0	0.0	5

Ontario, CA

ECONOLITE CONTROL. PRODUCTS, INC.

Solutions that Move the World' Trvl

Milliken Ave @ Guasti - 10.211.51.11 - ASC3 - Econolite Type - ASC/3

Controller Pedestrian Overlaps
Vehicle / Pedestrian Overlaps (MM) 2-3

Included	Pedestrian Overlaps

Ontario, CA

ECONOLITE CONTROL. PRODUCTS, INC.

Solutions that Move the World' Trvl

Milliken Ave @ Guasti - 10.211.51.11 - ASC3 - Econolite Type - ASC/3

Controller Start / Flash Data (MM) 2-5

Start Up

Phase	Phase Setting
1	.
2	.
3	.
4	Y
5	.
6	.
7	.
8	Y
9	.
10	.
11	.
12	.
13	.
14	.
15	.
16	.

Overlap
A
B
C
D

Flash Thru Mon: No
Flash Time: 0
All Red: 6
Power Start Seq: 1
MUTCD Enabled: No
Y->G: n/a

Automatic Flash

Entry
2
6

Exit
2
6

Overlap Exit
A
B
C
D

Flash Thru Mon: No
Exit Flash: W
Minimum Flash: 8
Mimimum Recall: No
Cycle Through Phase: No

Ontario, CA

ECONOLITE CONTROL. PRODUCTS, INC.

Solutions that Move the World' Trvl

Milliken Ave @ Guasti - 10.211.51.11 - ASC3 - Econolite Type - ASC/3

Controller Options

Controller Options (MM) 2-6-1

Phase	1	2	3	4	5	6	7	8	9	10	11	12	13	14	15	16
Flashing Grn Ph	.	.	.	.	.	.	.	.	.	.	.	.	.	.	.	.
Guar Passage																
Non-Act I																
Non-Act II																
Dual Entry		X		X		X		X								
Cond Service																
Cond Reservice																
Ped Re-Service																
Rest In Walk																
Flashing Walk																
Ped Clr-Yel																
Ped Clr-Red																
IGRN + Veh Ext																

Ped Clear Protect: Off Unit Red Revert: 2.0 MUTCD 3 Seconds Don't Walk: No

Pre-Timed Mode (MM) 2-7

Enable Pre-Timed Mode: No Free Input Disables Pre-Timed: No

Phase	1	2	3	4	5	6	7	8	9	10	11	12	13	14	15	16
Pre-Timed																

Phase Recall Options (MM) 2-8

Plan # 1

	1	2	3	4	5	6	7	8	9	10	11	12	13	14	15	16
Lock Detector																
Vehicle Recall																
Ped Recall																
Max Recall																
Soft Recall		X				X										
No Rest																
AI Calc																

Ontario, CA

ECONOLITE CONTROL. PRODUCTS, INC.

Solutions that Move the World' Trvl

Milliken Ave @ Guasti - 10.211.51.11 - ASC3 - Econolite Type - ASC/3

Coordination Options

Options (MM) 3-1

Manual Pattern	Auto	ECPI Coord	Yes
System Source	TBC	System Format	STD
Splits In	Percent	Offsets In	Percent
Transition	Smooth	Max Select	MAXINH
Dwell / Add Time	0		
Delay Coord Wk-LZ	No	Force Off	Fixed
Offset Reference	Lead	Use Ped Time	Yes
Ped Recall	No	Ped Reservice	No
Local Zero Override	No	FO Added Ini Green	No
Re-sync Count	0	Multisync	No

Auto Perm Minimum Green (Seconds) (MM) 3-4

Phase	1	2	3	4	5	6	7	8	9	10	11	12	13	14	15	16
Minimum Green	0	0	0	0	0	0	0	0	0	0	0	0	0	0	0	0

Split Demand (MM) 3-5

Phase	1	2	3	4	5	6	7	8	9	10	11	12	13	14	15	16
Demand 1																
Demand 2																

Demand	1	2
Detector	0	0
Call Time (Sec)	0	0
Cycle Count	0	0

Ontario, CA

ECONOLITE CONTROL. PRODUCTS, INC.

Solutions that Move the World' Trvl

Milliken Ave @ Guasti - 10.211.51.11 - ASC3 - Econolite Type - ASC/3

Coordination Pattern Data
Coordinator Pattern Data (MM) 3-2

Coordinator Pattern # 1

Split Pattern	1	TS2 (Pat-Off)	0-1	Splits In	Percent
Cycle	145	Std (COS)	9	Offsets In	Percent
Offset Value	29%	Dwell/Add Time	0		
Actuated Coord	Yes	Timing Plan	0		
Actuated Walk Rest	No	Sequence	2		
Phase Reservice	No	Action Plan	0		
Max Select	None	Force Off	None		

Split Preference Phases

Phase	1	2	3	4	5	6	7	8	9	10	11	12	13	14	15	16
Description																
Splits (Split Pat 1)	17	26	29	28	19	24	28	29	0	0	0	0	0	0	0	0
Pref 1	0	0	0	0	0	0	0	0	0	0	0	0	0	0	0	0
Pref 2	0	0	0	0	0	0	0	0	0	0	0	0	0	0	0	0

Ring	1	2	3	4
Ring Split Ext	0	0	0	0
Ring Displacement	-	0	0	0
Split Sum	100%	100%	0%	0%

Misc. Data

Veh Perm 1	0	Veh Perm 2	0	Veh Perm 2 Disp	0
Split Demand Pat 1	0	Split Demand Pat 2	0	Crossing Arterial Pat	0

Split Pattern

Phase	1	2	3	4	5	6	7	8	9	10	11	12	13	14	15	16
Coord Phase		X				X										
Vehicle Recall																
Pedestrian Recall																
Recall to Max. Time																
Omit Phase									X	X	X	X	X	X	X	X
Special Funciton Outputs																

Coordinator Pattern # 2

Split Pattern	2	TS2 (Pat-Off)	0-2	Splits In	Percent
Cycle	145	Std (COS)	17	Offsets In	Percent
Offset Value	31%	Dwell/Add Time	0		
Actuated Coord	Yes	Timing Plan	0		
Actuated Walk Rest	No	Sequence	1		
Phase Reservice	No	Action Plan	0		
Max Select	None	Force Off	None		

Split Preference Phases

Phase	1	2	3	4	5	6	7	8	9	10	11	12	13	14	15	16
Description																
Splits (Split Pat 2)	19	26	29	26	21	23	26	29	0	0	0	0	0	0	0	0
Pref 1	0	0	0	0	0	0	0	0	0	0	0	0	0	0	0	0
Pref 2	0	0	0	0	0	0	0	0	0	0	0	0	0	0	0	0

Ring	1	2	3	4
Ring Split Ext	0	0	0	0
Ring Displacement	-	0	0	0
Split Sum	100%	99%	0%	0%

Misc. Data

Veh Perm 1	0	Veh Perm 2	0	Veh Perm 2 Disp	0
Split Demand Pat 1	0	Split Demand Pat 2	0	Crossing Arterial Pat	0

Split Pattern

Phase	1	2	3	4	5	6	7	8	9	10	11	12	13	14	15	16
Coord Phase		X				X										
Vehicle Recall																
Pedestrian Recall																
Recall to Max. Time																
Omit Phase									X	X	X	X	X	X	X	X
Special Funciton Outputs																

Coordinator Pattern # 3

Split Pattern	3	TS2 (Pat-Off)	0-3	Splits In	Percent
Cycle	145	Std (COS)	25	Offsets In	Percent
Offset Value	32%	Dwell/Add Time	0		
Actuated Coord	Yes	Timing Plan	0		
Actuated Walk Rest	No	Sequence	1		
Phase Reservice	No	Action Plan	0		
Max Select	None	Force Off	None		

Split Preference Phases

Phase	1	2	3	4	5	6	7	8	9	10	11	12	13	14	15	16
Description																
Splits (Split Pat 3)	17	27	29	27	20	24	27	29	0	0	0	0	0	0	0	0
Pref 1	0	0	0	0	0	0	0	0	0	0	0	0	0	0	0	0
Pref 2	0	0	0	0	0	0	0	0	0	0	0	0	0	0	0	0

Ring	1	2	3	4
Ring Split Ext	0	0	0	0
Ring Displacement	-	0	0	0
Split Sum	100%	100%	0%	0%

Misc. Data

Veh Perm 1	0	Veh Perm 2	0	Veh Perm 2 Disp	0
Split Demand Pat 1	0	Split Demand Pat 2	0	Crossing Arterial Pat	0

Split Pattern

Phase	1	2	3	4	5	6	7	8	9	10	11	12	13	14	15	16
Coord Phase		X				X										
Vehicle Recall																
Pedestrian Recall																
Recall to Max. Time																
Omit Phase									X	X	X	X	X	X	X	X
Special Funciton Outputs																

Ontario, CA

ECONOLITE CONTROL. PRODUCTS, INC.

Solutions that Move the World' Trvl

Milliken Ave @ Guasti - 10.211.51.11 - ASC3 - Econolite Type - ASC/3

Coordination Split Pattern

Split Pattern Data (MM) 3-3

Split Pattern # 1

Phase	1	2	3	4	5	6	7	8	9	10	11	12	13	14	15	16
Description																
Split (percent)	17	26	29	28	19	24	28	29	0	0	0	0	0	0	0	0
Coord Phase		X				X										
Vehicle Recall																
Pedestrian Recall																
Recall to Max. Time																
Omit Phase									X	X	X	X	X	X	X	X

Ring	1	2	3	4
Split Sum	100%	100%	0%	0%

Split Pattern # 2

Phase	1	2	3	4	5	6	7	8	9	10	11	12	13	14	15	16
Description																
Split (percent)	19	26	29	26	21	23	26	29	0	0	0	0	0	0	0	0
Coord Phase		X				X										
Vehicle Recall																
Pedestrian Recall																
Recall to Max. Time																
Omit Phase									X	X	X	X	X	X	X	X

Ring	1	2	3	4
Split Sum	100%	99%	0%	0%

Split Pattern # 3

Phase	1	2	3	4	5	6	7	8	9	10	11	12	13	14	15	16
Description																
Split (percent)	17	27	29	27	20	24	27	29	0	0	0	0	0	0	0	0
Coord Phase		X				X										
Vehicle Recall																
Pedestrian Recall																
Recall to Max. Time																
Omit Phase									X	X	X	X	X	X	X	X

Ring	1	2	3	4
Split Sum	100%	100%	0%	0%

Ontario, CA

ECONOLITE CONTROL. PRODUCTS, INC.

Solutions that Move the World' Trvl

Milliken Ave @ Guasti - 10.211.51.11 - ASC3 - Econolite Type - ASC/3

Preempt Plan

Preempt Plan (MM) 4-1

Preempt Plan 3

Phase	1	2	3	4	5	6	7	8	9	10	11	12	13	14	15	16
Overlap	A	B	C	D	E	F	G	H	I	J	K	L	M	N	O	P
Trk Clr Veh	.	.	.	.	.	.	.	.	.	.	.	.	.	.	.	.
Trk Clr Overlap	.	.	.	.	.	.	.	.	.	.	.	.	.	.	.	.
Enable Trailing	X	X	X	X	X	X	X	X	X	X	X	X	X	X	X	X
Dwell Veh	.	X	.	.	X	.	.	.	.	.	.	.	.	.	.	.
Dwell Ped																
Dwell Overlap	.	.	.	.	.	.	.	.	.	.	.	.	.	.	.	.
Cycling Veh	.	.	.	.	.	.	.	.	.	.	.	.	.	.	.	.
Cycling Ped																
Cycling Overlap	.	.	.	.	.	.	.	.	.	.	.	.	.	.	.	.
Exit Phases																
Exit Calls																
Special Function																

Enable	Yes	Preempt Override	Yes	Interlock Enable	No
Det Lock	Yes	Delay	0	Inhibit	0
Override Flash	Yes	Duration	5	CLR > GRN	No
Term Ovlp Asap	No	PC Through Yel	No	Terminate Phase	No
Ped Dark	No	Track Clear Rsrv	No	Dwell Flash	Off
Linked Pmt	0	FL Exit Color	Grn	Exit Options	Off
Exit Timing Plan	0	Reservice	0	Fault Type	Hard

Ring	1	2	3	4
Free During Pmt	No	No	No	No

Timing	Walk	Ped Clr	Min Grn	Yellow	Red
Entrance	0	12	1	4.0	1.0
	Min Grn	Ext Grn	Max Grn	Yellow	Red
Track Clear	0	0	0	4.0	1.0
	Min Dwell	Pmt Ext	Max Time	Yellow	Red
Dwell / Cycle-Exit	0	0.0	60	4.0	1.0

Preemption Active Out	On	Preempt Act Dwell	No
Other - Priority Preempt	Off	Non-Priority Pmt	Off
Inhibit Extension Time	0.0	Ped Priority Return	Off
Veh Priority Return	Off	Queue Delay	Off
Conditional Delay	Off		

Phase	1	2	3	4	5	6	7	8	9	10	11	12	13	14	15	16
Veh Pri Return %	0	0	0	0	0	0	0	0	0	0	0	0	0	0	0	0

Preempt Plan 4

Phase	1	2	3	4	5	6	7	8	9	10	11	12	13	14	15	16
Overlap	A	B	C	D	E	F	G	H	I	J	K	L	M	N	O	P
Trk Clr Veh	.	.	.	.	.	.	.	.	.	.	.	.	.	.	.	.
Trk Clr Overlap	.	.	.	.	.	.	.	.	.	.	.	.	.	.	.	.
Enable Trailing	X	X	X	X	X	X	X	X	X	X	X	X	X	X	X	X
Dwell Veh	X	.	.	.	.	X	.	.	.	.	.	.	.	.	.	.
Dwell Ped																
Dwell Overlap	.	.	.	.	.	.	.	.	.	.	.	.	.	.	.	.
Cycling Veh	.	.	.	.	.	.	.	.	.	.	.	.	.	.	.	.
Cycling Ped																
Cycling Overlap	.	.	.	.	.	.	.	.	.	.	.	.	.	.	.	.
Exit Phases																
Exit Calls																
Special Function																

Enable	Yes	Preempt Override	Yes	Interlock Enable	No
Det Lock	Yes	Delay	0	Inhibit	0
Override Flash	Yes	Duration	0	CLR > GRN	No
Term Ovlp Asap	No	PC Through Yel	No	Terminate Phase	No
Ped Dark	No	Track Clear Rsrv	No	Dwell Flash	Off
Linked Pmt	0	FL Exit Color	Grn	Exit Options	Off
Exit Timing Plan	0	Reservice	0	Fault Type	Hard

Ring	1	2	3	4
Free During Pmt	No	No	No	No

Timing	Walk	Ped Clr	Min Grn	Yellow	Red
Entrance	0	12	1	4.0	1.0
	Min Grn	**Ext Grn**	**Max Grn**	**Yellow**	**Red**
Track Clear	0	0	0	4.0	1.0
	Min Dwell	**Pmt Ext**	**Max Time**	**Yellow**	**Red**
Dwell / Cycle-Exit	0	0.0	60	4.0	1.0

Preemption Active Out	On	Preempt Act Dwell	No
Other - Priority Preempt	Off	Non-Priority Pmt	Off
Inhibit Extension Time	0.0	Ped Priority Return	Off
Veh Priority Return	Off	Queue Delay	Off
Conditional Delay	Off		

Phase	1	2	3	4	5	6	7	8	9	10	11	12	13	14	15	16
Veh Pri Return %	0	0	0	0	0	0	0	0	0	0	0	0	0	0	0	0

Preempt Plan 5

Phase	1	2	3	4	5	6	7	8	9	10	11	12	13	14	15	16
Overlap	A	B	C	D	E	F	G	H	I	J	K	L	M	N	O	P
Trk Clr Veh	.	.	.	.	.	.	.	.	.	.	.	.	.	.	.	.
Trk Clr Overlap	.	.	.	.	.	.	.	.	.	.	.	.	.	.	.	.
Enable Trailing	X	X	X	X	X	X	X	X	X	X	X	X	X	X	X	X
Dwell Veh	.	.	.	X	.	.	X	.	.	.	.	.	.	.	.	.
Dwell Ped																
Dwell Overlap	.	.	.	.	.	.	.	.	.	.	.	.	.	.	.	.
Cycling Veh	.	.	.	.	.	.	.	.	.	.	.	.	.	.	.	.
Cycling Ped																
Cycling Overlap	.	.	.	.	.	.	.	.	.	.	.	.	.	.	.	.
Exit Phases																
Exit Calls																
Special Function																

Enable	Yes	Preempt Override	Yes	Interlock Enable	No
Det Lock	Yes	Delay	0	Inhibit	0
Override Flash	Yes	Duration	0	CLR > GRN	No
Term Ovlp Asap	No	PC Through Yel	No	Terminate Phase	No
Ped Dark	No	Track Clear Rsrv	No	Dwell Flash	Off
Linked Pmt	0	FL Exit Color	Grn	Exit Options	Off
Exit Timing Plan	0	Reservice	0	Fault Type	Hard

Ring	1	2	3	4
Free During Pmt	No	No	No	No

Timing	Walk	Ped Clr	Min Grn	Yellow	Red
Entrance	0	12	1	4.0	1.0
	Min Grn	**Ext Grn**	**Max Grn**	**Yellow**	**Red**
Track Clear	0	0	0	4.0	1.0
	Min Dwell	**Pmt Ext**	**Max Time**	**Yellow**	**Red**
Dwell / Cycle-Exit	0	0.0	60	4.0	1.0

Preemption Active Out	On	Preempt Act Dwell	No
Other - Priority Preempt	Off	Non-Priority Pmt	Off
Inhibit Extension Time	0.0	Ped Priority Return	Off
Veh Priority Return	Off	Queue Delay	Off
Conditional Delay	Off		

Phase	1	2	3	4	5	6	7	8	9	10	11	12	13	14	15	16
Veh Pri Return %	0	0	0	0	0	0	0	0	0	0	0	0	0	0	0	0

Preempt Plan 6

Phase	1	2	3	4	5	6	7	8	9	10	11	12	13	14	15	16
Overlap	A	B	C	D	E	F	G	H	I	J	K	L	M	N	O	P
Trk Clr Veh	.	.	.	.	.	.	.	.	.	.	.	.	.	.	.	.
Trk Clr Overlap	.	.	.	.	.	.	.	.	.	.	.	.	.	.	.	.
Enable Trailing	X	X	X	X	X	X	X	X	X	X	X	X	X	X	X	X
Dwell Veh	.	.	X	.	.	.	.	X	.	.	.	.	.	.	.	.
Dwell Ped																
Dwell Overlap	.	.	.	.	.	.	.	.	.	.	.	.	.	.	.	.
Cycling Veh	.	.	.	.	.	.	.	.	.	.	.	.	.	.	.	.
Cycling Ped																
Cycling Overlap	.	.	.	.	.	.	.	.	.	.	.	.	.	.	.	.
Exit Phases																
Exit Calls																
Special Function																

Enable	Yes	Preempt Override	Yes	Interlock Enable	No
Det Lock	Yes	Delay	0	Inhibit	0
Override Flash	Yes	Duration	0	CLR > GRN	No
Term Ovlp Asap	No	PC Through Yel	No	Terminate Phase	No
Ped Dark	No	Track Clear Rsrv	No	Dwell Flash	Off
Linked Pmt	0	FL Exit Color	Grn	Exit Options	Off
Exit Timing Plan	0	Reservice	0	Fault Type	Hard

Ring	1	2	3	4
Free During Pmt	No	No	No	No

Timing	Walk	Ped Clr	Min Grn	Yellow	Red
Entrance	0	12	1	4.0	1.0
	Min Grn	**Ext Grn**	**Max Grn**	**Yellow**	**Red**
Track Clear	0	0	0	4.0	1.0
	Min Dwell	**Pmt Ext**	**Max Time**	**Yellow**	**Red**
Dwell / Cycle-Exit	0	0.0	60	4.0	1.0

Preemption Active Out	On	Preempt Act Dwell	No
Other - Priority Preempt	Off	Non-Priority Pmt	Off
Inhibit Extension Time	0.0	Ped Priority Return	Off
Veh Priority Return	Off	Queue Delay	Off
Conditional Delay	Off		

Phase	1	2	3	4	5	6	7	8	9	10	11	12	13	14	15	16
Veh Pri Return %	0	0	0	0	0	0	0	0	0	0	0	0	0	0	0	0

Ontario, CA

ECONOLITE CONTROL. PRODUCTS, INC.

Solutions that Move the World' Trvl

Milliken Ave @ Guasti - 10.211.51.11 - ASC3 - Econolite Type - ASC/3

Preempt **Preempt Filtering**
Enable Preempt Filtering & TSP/SCP
(MM) 4-2

Input	Solid	Pulsing
1	...BYPASSED...	...BYPASSED...
2	...BYPASSED...	...BYPASSED...
3	PREEMPTION 3	PREEMPTION 7
4	PREEMPTION 4	PREEMPTION 8
5	PREEMPTION 5	PREEMPTION 9
6	PREEMPTION 6	PREEMPTION 10
7	...BYPASSED...	...BYPASSED...
8	...BYPASSED...	...BYPASSED...
9	...BYPASSED...	...BYPASSED...
10	...BYPASSED...	...BYPASSED...

Ontario, CA

ECONOLITE CONTROL. PRODUCTS, INC.

Solutions that Move the World' Trvl

Milliken Ave @ Guasti - 10.211.51.11 - ASC3 - Econolite Type - ASC/3

Preempt TSP/SCP Plan and Split

TSP / SCP Plan (MM) 4-3

TSP/SCP Plan	Enable Option	Signal Type	Det Lock	Delay Time	Max Presence	PMT Enables Reservice	No Delay in TSP	Action SF Inhibit	Reservice Cycles	Bus Heading
1	No	Solid	No	0	0	No	False	0	0	NB
2	No	Solid	No	0	0	No	False	0	0	SB
3	No	Solid	No	0	0	No	False	0	0	EB
4	No	Solid	No	0	0	No	False	0	0	WB
5	No	Solid	No	0	0	No	False	0	0	.
6	No	Solid	No	0	0	No	False	0	0	.

Mode: TSP
Free Default Pattern: 120
Headway Allowance: 0

TSP/SCP Plan	1	2	3	4	5	6	7	8	9	10	11	12	13	14	15	16
1	.	.	.	.	.	.	.	.	.	.	.	.	.	.	.	.
2	.	.	.	.	.	.	.	.	.	.	.	.	.	.	.	.
3	.	.	.	.	.	.	.	.	.	.	.	.	.	.	.	.
4	.	.	.	.	.	.	.	.	.	.	.	.	.	.	.	.
5	.	.	.	.	.	.	.	.	.	.	.	.	.	.	.	.
6	.	.	.	.	.	.	.	.	.	.	.	.	.	.	.	.

TSP / SCP Split Pattern (MM) 4-4

TSP/SCP Split Pattern	Max Type	Phase															
		1	2	3	4	5	6	7	8	9	10	11	12	13	14	15	16
4	Max Reduction	255	255	255	255	255	255	255	255	255	255	255	255	255	255	255	255

Ontario, CA

ECONOLITE CONTROL. PRODUCTS, INC.

Solutions that Move the World' Trvl

Milliken Ave @ Guasti - 10.211.51.11 - ASC3 - Econolite Type - ASC/3

Time Base Clock/Calendar
Clock/Calendar Data (MM) 5-1

Manual Action Plan:	0
SYNC Reference Time:	00:00
SYNC Reference:	Reference Time
Day Light Savings:	No
Time Reset Input Set Time:	3:30:00
Standard Time From GMT:	0

Ontario, CA

IB ECONOUTE CONTROL. PRODUCTS. INC.

Solutions that Move the World Trvl

Milliken Ave @ Guasti - 10.211.51.11 - ASC3 - Econolite Type - ASC/3

Time Base Action Plan
Action Plan (MM) 5-2

Action Plan - 1

Pattern	1	Override Sys	No
Timing Plan	0	Sequence	2
Veh Detector Plan	0	Det Log	None
Flash	No	Red Rest	No
Veh Det Diag Plan	0	Ped Det Diag Plan	0
Dimming Enable	No	Pmt Veh Priority Ret	No
Pmt Ped Priority Ret	No	Pmt Queue Delay	No
Pmt Cond Delay	No		

Phase	1	2	3	4	5	6	7	8	9	10	11	12	13	14	15	16
Ped Recall																
Walk 2																
Veh Ext 2																
Veh Recall																
Max Recall																
Max 2																
Max 3																
CS Inhibit																
Omit																
Spec Func (1-8)																
Aux Func (1-3)																

	1	2	3	4	5	6	7	8	9	10	11	12	13	14	15
LP 1-15	.	.	.	.	.	.	.	.	.	.	.	.	.	.	.
LP 16-30	.	.	.	.	.	.	.	.	.	.	.	.	.	.	.
LP 31-45	.	.	.	.	.	.	.	.	.	.	.	.	.	.	.
LP 46-60	.	.	.	.	.	.	.	.	.	.	.	.	.	.	.
LP 61-75	.	.	.	.	.	.	.	.	.	.	.	.	.	.	.
LP 76-90	.	.	.	.	.	.	.	.	.	.	.	.	.	.	.
LP 91-100	.	.	.	.	.	.	.	.	.	.					

Action Plan - 2

Pattern	2	Override Sys	No
Timing Plan	0	Sequence	1
Veh Detector Plan	0	Det Log	None
Flash	No	Red Rest	No
Veh Det Diag Plan	0	Ped Det Diag Plan	0
Dimming Enable	No	Pmt Veh Priority Ret	No
Pmt Ped Priority Ret	No	Pmt Queue Delay	No
Pmt Cond Delay	No		

Phase	1	2	3	4	5	6	7	8	9	10	11	12	13	14	15	16
Ped Recall																
Walk 2																
Veh Ext 2																
Veh Recall																
Max Recall																
Max 2																
Max 3																
CS Inhibit																
Omit																
Spec Func (1-8)																
Aux Func (1-3)																

	1	2	3	4	5	6	7	8	9	10	11	12	13	14	15
LP 1-15	.	.	.	.	.	.	.	.	.	.	.	.	.	.	.
LP 16-30	.	.	.	.	.	.	.	.	.	.	.	.	.	.	.
LP 31-45	.	.	.	.	.	.	.	.	.	.	.	.	.	.	.
LP 46-60	.	.	.	.	.	.	.	.	.	.	.	.	.	.	.
LP 61-75	.	.	.	.	.	.	.	.	.	.	.	.	.	.	.
LP 76-90	.	.	.	.	.	.	.	.	.	.	.	.	.	.	.
LP 91-100	.	.	.	.	.	.	.	.	.	.					

Action Plan - 3

Pattern	3	Override Sys	No
Timing Plan	0	Sequence	1
Veh Detector Plan	0	Det Log	None
Flash	No	Red Rest	No
Veh Det Diag Plan	0	Ped Det Diag Plan	0
Dimming Enable	No	Pmt Veh Priority Ret	No
Pmt Ped Priority Ret	No	Pmt Queue Delay	No
Pmt Cond Delay	No		

Phase	1	2	3	4	5	6	7	8	9	10	11	12	13	14	15	16
Ped Recall																
Walk 2																
Veh Ext 2																
Veh Recall																
Max Recall																
Max 2																
Max 3																
CS Inhibit																
Omit																
Spec Func (1-8)																
Aux Func (1-3)																

	1	2	3	4	5	6	7	8	9	10	11	12	13	14	15
LP 1-15	.	.	.	.	.	.	.	.	.	.	.	.	.	.	.
LP 16-30	.	.	.	.	.	.	.	.	.	.	.	.	.	.	.
LP 31-45	.	.	.	.	.	.	.	.	.	.	.	.	.	.	.
LP 46-60	.	.	.	.	.	.	.	.	.	.	.	.	.	.	.
LP 61-75	.	.	.	.	.	.	.	.	.	.	.	.	.	.	.
LP 76-90	.	.	.	.	.	.	.	.	.	.	.	.	.	.	.
LP 91-100	.	.	.	.	.	.	.	.	.	.					

Action Plan - 55

Pattern	Free	Override Sys	No
Timing Plan	0	Sequence	0
Veh Detector Plan	0	Det Log	None
Flash	No	Red Rest	No
Veh Det Diag Plan	0	Ped Det Diag Plan	0
Dimming Enable	No	Pmt Veh Priority Ret	No
Pmt Ped Priority Ret	No	Pmt Queue Delay	No
Pmt Cond Delay	No		

Phase	1	2	3	4	5	6	7	8	9	10	11	12	13	14	15	16
Ped Recall																
Walk 2																
Veh Ext 2																
Veh Recall																
Max Recall																
Max 2																
Max 3																
CS Inhibit																
Omit																

Spec Func (1-8)								

Aux Func (1-3)			

	1	2	3	4	5	6	7	8	9	10	11	12	13	14	15
LP 1-15	.	.	.	.	.	.	.	.	.	.	.	.	.	.	.
LP 16-30	.	.	.	.	.	.	.	.	.	.	.	.	.	.	.
LP 31-45	.	.	.	.	.	.	.	.	.	.	.	.	.	.	.
LP 46-60	.	.	.	.	.	.	.	.	.	.	.	.	.	.	.
LP 61-75	.	.	.	.	.	.	.	.	.	.	.	.	.	.	.
LP 76-90	.	.	.	.	.	.	.	.	.	.	.	.	.	.	.
LP 91-100	.	.	.	.	.	.	.	.	.	.					

Ontario, CA

ECONOLITE CONTROL. PRODUCTS, INC.

Solutions that Move the World' Trvl

Milliken Ave @ Guasti - 10.211.51.11 - ASC3 - Econolite Type - ASC/3

Time Base Day Plan/Schedule
Day Plan (MM) 5-3

Day Plan #1

Event	Action Plan	Start Time
1	55	00:00
2	1	06:00
3	2	10:00
4	3	15:00
5	55	19:00

Schedule (MM) 5-4

Schedule Number - 1

Day Plan No.: 1

Month	JAN	FEB	MAR	APR	MAY	JUN	JUL	AUG	SEP	OCT	NOV	DEC
	X	X	X	X	X	X	X	X	X	X	X	X

Day (DOW)	SUN	MON	TUE	WED	THU	FRI	SAT
		X	X	X	X	X	

Day (DOM)	1	2	3	4	5	6	7	8	9	10	11
	X	X	X	X	X	X	X	X	X	X	X
	12	13	14	15	16	17	18	19	20	21	22
	X	X	X	X	X	X	X	X	X	X	X
	23	24	25	26	27	28	29	30	31		
	X	X	X	X	X	X	X	X	X		

Schedule Number - 2

Day Plan No.: 1

Month	JAN	FEB	MAR	APR	MAY	JUN	JUL	AUG	SEP	OCT	NOV	DEC
	X	X	X	X	X	X	X	X	X	X	X	X

Day (DOW)	SUN	MON	TUE	WED	THU	FRI	SAT
	X						X

Day (DOM)	1	2	3	4	5	6	7	8	9	10	11
	X	X	X	X	X	X	X	X	X	X	X
	12	13	14	15	16	17	18	19	20	21	22
	X	X	X	X	X	X	X	X	X	X	X
	23	24	25	26	27	28	29	30	31		
	X	X	X	X	X	X	X	X	X		

Ontario, CA

ECONOLITE CONTROL. PRODUCTS, INC.

Solutions that Move the World' Trvl

Milliken Ave @ Guasti - 10.211.51.11 - ASC3 - Econolite Type - ASC/3

Time Base Exceptions
Exception Day Program (MM) 5-5

Excep Day	Float/Fixed	Mon/Mon	DOW/DOM	WOM/Year	Day Plan

Ontario, CA

ECONOLITE CONTROL. PRODUCTS, INC.

Solutions that Move the World' Trvl

Milliken Ave @ Guasti - 10.211.51.11 - ASC3 - Econolite Type - ASC/3

Detectors

Detectors - Pg 1

Veh Det Phase Assignment (MM) 6-1

Vehicle Detector Plan Number - 1

Veh Detector	Called Phase	Type

Vehicle Detector Plan Number - 2

Veh Detector	Called Phase	Type

Vehicle Detector Plan Number - 3

Veh Detector	Called Phase	Type

Vehicle Detector Plan Number - 4

Veh Detector	Called Phase	Type

Vehicle Detector Setup (MM) 6-2

Veh Detector	Type	TS2 Detector	Description
1	S-STANDARD	Yes	
2	S-STANDARD	Yes	
3	S-STANDARD	Yes	
4	S-STANDARD	Yes	
5	S-STANDARD	Yes	
6	S-STANDARD	Yes	
7	S-STANDARD	Yes	
8	S-STANDARD	Yes	
9	S-STANDARD	Yes	
10	S-STANDARD	Yes	
11	S-STANDARD	Yes	
12	S-STANDARD	Yes	
13	S-STANDARD	Yes	
14	S-STANDARD	Yes	
15	S-STANDARD	Yes	
16	S-STANDARD	Yes	
17	S-STANDARD	Yes	
18	S-STANDARD	Yes	
19	N-NTCIP	Yes	
20	S-STANDARD	Yes	
21	N-NTCIP	Yes	
22	S-STANDARD	Yes	
23	N-NTCIP	Yes	
24	S-STANDARD	Yes	
25	N-NTCIP	Yes	
26	N-NTCIP	Yes	
27	N-NTCIP	Yes	
28	N-NTCIP	Yes	
29	N-NTCIP	Yes	
30	N-NTCIP	Yes	
31	N-NTCIP	Yes	
32	N-NTCIP	Yes	

Vehicle Detector Plan Number - 1

Veh Detector	Phase	ECPI Log	Call Option	Delay Time	Ext Option	Extend Time / Passage Time	Queue Lim. / Discon. Time	Use Added Initial	Cross Switch Ph	Lock In	NTCIP Vol.	NTCIP Occ.	Pmt Queue Delay

1	1	No	Yes	0.0	Passage	0.0	0	No	0	None	No	No	No
2	2	No	Yes	0.0	Passage	0.0	0	No	0	None	No	No	No
3	3	No	Yes	0.0	Passage	0.0	0	No	0	None	No	No	No
4	4	No	Yes	0.0	Passage	0.0	0	No	0	None	No	No	No
5	5	No	Yes	0.0	Passage	0.0	0	No	0	None	No	No	No
6	6	No	Yes	0.0	Passage	0.0	0	No	0	None	No	No	No
7	7	No	Yes	0.0	Passage	0.0	0	No	0	None	No	No	No
8	8	No	Yes	0.0	Passage	0.0	0	No	0	None	No	No	No
9	1	No	Yes	0.0	Passage	0.0	0	No	0	None	No	No	No
10	2	No	Yes	0.0	Passage	0.0	0	No	0	None	No	No	No
11	3	No	Yes	0.0	Passage	0.0	0	No	0	None	No	No	No
12	4	No	Yes	0.0	Passage	0.0	0	No	0	None	No	No	No
13	5	No	Yes	0.0	Passage	0.0	0	No	0	None	No	No	No
14	6	No	Yes	0.0	Passage	0.0	0	No	0	None	No	No	No
15	7	No	Yes	0.0	Passage	0.0	0	No	0	None	No	No	No
16	8	No	Yes	0.0	Passage	0.0	0	No	0	None	No	No	No
17	0	No	Yes	0.0	Passage	0.0	0	No	0	None	No	No	No
18	2	No	Yes	0.0	Passage	0.0	0	No	0	None	No	No	No
19	0	No	Yes	0.0	Passage	0.0	0	No	0	None	No	No	No
20	4	No	Yes	0.0	Passage	0.0	0	No	0	None	No	No	No
21	0	No	Yes	0.0	Passage	0.0	0	No	0	None	No	No	No
22	6	No	Yes	0.0	Passage	0.0	0	No	0	None	No	No	No
23	0	No	Yes	0.0	Passage	0.0	0	No	0	None	No	No	No
24	8	No	Yes	10.0	Passage	0.0	0	No	0	None	No	No	No
25	0	No	Yes	0.0	Passage	0.0	0	No	0	None	No	No	No
26	0	No	Yes	0.0	Passage	0.0	0	No	0	None	No	No	No
27	0	No	Yes	0.0	Passage	0.0	0	No	0	None	No	No	No
28	0	No	Yes	0.0	Passage	0.0	0	No	0	None	No	No	No
29	0	No	Yes	0.0	Passage	0.0	0	No	0	None	No	No	No
30	0	No	Yes	0.0	Passage	0.0	0	No	0	None	No	No	No
31	0	No	Yes	0.0	Passage	0.0	0	No	0	None	No	No	No
32	0	No	Yes	0.0	Passage	0.0	0	No	0	None	No	No	No

Vehicle Detector Plan Number - 2

Veh Detector	Phase	ECPI Log	Call Option	Delay Time	Ext Option	Extend Time / Passage Time	Queue Lim. / Discon. Time	Use Added Initial	Cross Switch Ph	Lock In	NTCIP Vol.	NTCIP Occ.	Pmt Queue Delay
1	1	No	Yes	0.0	Passage	0.0	0	No	0	None	No	No	No
2	2	No	Yes	0.0	Passage	0.0	0	No	0	None	No	No	No
3	3	No	Yes	0.0	Passage	0.0	0	No	0	None	No	No	No
4	4	No	Yes	0.0	Passage	0.0	0	No	0	None	No	No	No
5	5	No	Yes	0.0	Passage	0.0	0	No	0	None	No	No	No
6	6	No	Yes	0.0	Passage	0.0	0	No	0	None	No	No	No
7	7	No	Yes	0.0	Passage	0.0	0	No	0	None	No	No	No
8	8	No	Yes	0.0	Passage	0.0	0	No	0	None	No	No	No
9	9	No	Yes	0.0	Passage	0.0	0	No	0	None	No	No	No
10	10	No	Yes	0.0	Passage	0.0	0	No	0	None	No	No	No
11	11	No	Yes	0.0	Passage	0.0	0	No	0	None	No	No	No
12	12	No	Yes	0.0	Passage	0.0	0	No	0	None	No	No	No
13	13	No	Yes	0.0	Passage	0.0	0	No	0	None	No	No	No
14	14	No	Yes	0.0	Passage	0.0	0	No	0	None	No	No	No
15	15	No	Yes	0.0	Passage	0.0	0	No	0	None	No	No	No
16	16	No	Yes	0.0	Passage	0.0	0	No	0	None	No	No	No
17	0	No	Yes	0.0	Passage	0.0	0	No	0	None	No	No	No
18	0	No	Yes	0.0	Passage	0.0	0	No	0	None	No	No	No
19	0	No	Yes	0.0	Passage	0.0	0	No	0	None	No	No	No
20	0	No	Yes	0.0	Passage	0.0	0	No	0	None	No	No	No
21	0	No	Yes	0.0	Passage	0.0	0	No	0	None	No	No	No
22	0	No	Yes	0.0	Passage	0.0	0	No	0	None	No	No	No
23	0	No	Yes	0.0	Passage	0.0	0	No	0	None	No	No	No
24	0	No	Yes	0.0	Passage	0.0	0	No	0	None	No	No	No
25	0	No	Yes	0.0	Passage	0.0	0	No	0	None	No	No	No
26	0	No	Yes	0.0	Passage	0.0	0	No	0	None	No	No	No
27	0	No	Yes	0.0	Passage	0.0	0	No	0	None	No	No	No
28	0	No	Yes	0.0	Passage	0.0	0	No	0	None	No	No	No
29	0	No	Yes	0.0	Passage	0.0	0	No	0	None	No	No	No
30	0	No	Yes	0.0	Passage	0.0	0	No	0	None	No	No	No
31	0	No	Yes	0.0	Passage	0.0	0	No	0	None	No	No	No

32	0	No	Yes	0.0	Passage	0.0	0	No	0	None	No	No	No

Vehicle Detector Plan Number - 3

Veh Detector	Phase	ECPI Log	Call Option	Delay Time	Ext Option	Extend Time / Passage Time	Queue Lim. / Discon. Time	Use Added Initial	Cross Switch Ph	Lock In	NTCIP Vol.	NTCIP Occ.	Pmt Queue Delay
1	1	No	Yes	0.0	Passage	0.0	0	No	0	None	No	No	No
2	2	No	Yes	0.0	Passage	0.0	0	No	0	None	No	No	No
3	3	No	Yes	0.0	Passage	0.0	0	No	0	None	No	No	No
4	4	No	Yes	0.0	Passage	0.0	0	No	0	None	No	No	No
5	5	No	Yes	0.0	Passage	0.0	0	No	0	None	No	No	No
6	6	No	Yes	0.0	Passage	0.0	0	No	0	None	No	No	No
7	7	No	Yes	0.0	Passage	0.0	0	No	0	None	No	No	No
8	8	No	Yes	0.0	Passage	0.0	0	No	0	None	No	No	No
9	9	No	Yes	0.0	Passage	0.0	0	No	0	None	No	No	No
10	10	No	Yes	0.0	Passage	0.0	0	No	0	None	No	No	No
11	11	No	Yes	0.0	Passage	0.0	0	No	0	None	No	No	No
12	12	No	Yes	0.0	Passage	0.0	0	No	0	None	No	No	No
13	13	No	Yes	0.0	Passage	0.0	0	No	0	None	No	No	No
14	14	No	Yes	0.0	Passage	0.0	0	No	0	None	No	No	No
15	15	No	Yes	0.0	Passage	0.0	0	No	0	None	No	No	No
16	16	No	Yes	0.0	Passage	0.0	0	No	0	None	No	No	No
17	0	No	Yes	0.0	Passage	0.0	0	No	0	None	No	No	No
18	0	No	Yes	0.0	Passage	0.0	0	No	0	None	No	No	No
19	0	No	Yes	0.0	Passage	0.0	0	No	0	None	No	No	No
20	0	No	Yes	0.0	Passage	0.0	0	No	0	None	No	No	No
21	0	No	Yes	0.0	Passage	0.0	0	No	0	None	No	No	No
22	0	No	Yes	0.0	Passage	0.0	0	No	0	None	No	No	No
23	0	No	Yes	0.0	Passage	0.0	0	No	0	None	No	No	No
24	0	No	Yes	0.0	Passage	0.0	0	No	0	None	No	No	No
25	0	No	Yes	0.0	Passage	0.0	0	No	0	None	No	No	No
26	0	No	Yes	0.0	Passage	0.0	0	No	0	None	No	No	No
27	0	No	Yes	0.0	Passage	0.0	0	No	0	None	No	No	No
28	0	No	Yes	0.0	Passage	0.0	0	No	0	None	No	No	No
29	0	No	Yes	0.0	Passage	0.0	0	No	0	None	No	No	No
30	0	No	Yes	0.0	Passage	0.0	0	No	0	None	No	No	No
31	0	No	Yes	0.0	Passage	0.0	0	No	0	None	No	No	No
32	0	No	Yes	0.0	Passage	0.0	0	No	0	None	No	No	No

Vehicle Detector Plan Number - 4

Veh Detector	Phase	ECPI Log	Call Option	Delay Time	Ext Option	Extend Time / Passage Time	Queue Lim. / Discon. Time	Use Added Initial	Cross Switch Ph	Lock In	NTCIP Vol.	NTCIP Occ.	Pmt Queue Delay
1	1	No	Yes	0.0	Passage	0.0	0	No	0	None	No	No	No
2	2	No	Yes	0.0	Passage	0.0	0	No	0	None	No	No	No
3	3	No	Yes	0.0	Passage	0.0	0	No	0	None	No	No	No
4	4	No	Yes	0.0	Passage	0.0	0	No	0	None	No	No	No
5	5	No	Yes	0.0	Passage	0.0	0	No	0	None	No	No	No
6	6	No	Yes	0.0	Passage	0.0	0	No	0	None	No	No	No
7	7	No	Yes	0.0	Passage	0.0	0	No	0	None	No	No	No
8	8	No	Yes	0.0	Passage	0.0	0	No	0	None	No	No	No
9	9	No	Yes	0.0	Passage	0.0	0	No	0	None	No	No	No
10	10	No	Yes	0.0	Passage	0.0	0	No	0	None	No	No	No
11	11	No	Yes	0.0	Passage	0.0	0	No	0	None	No	No	No
12	12	No	Yes	0.0	Passage	0.0	0	No	0	None	No	No	No
13	13	No	Yes	0.0	Passage	0.0	0	No	0	None	No	No	No
14	14	No	Yes	0.0	Passage	0.0	0	No	0	None	No	No	No
15	15	No	Yes	0.0	Passage	0.0	0	No	0	None	No	No	No
16	16	No	Yes	0.0	Passage	0.0	0	No	0	None	No	No	No
17	0	No	Yes	0.0	Passage	0.0	0	No	0	None	No	No	No
18	0	No	Yes	0.0	Passage	0.0	0	No	0	None	No	No	No
19	0	No	Yes	0.0	Passage	0.0	0	No	0	None	No	No	No
20	0	No	Yes	0.0	Passage	0.0	0	No	0	None	No	No	No
21	0	No	Yes	0.0	Passage	0.0	0	No	0	None	No	No	No
22	0	No	Yes	0.0	Passage	0.0	0	No	0	None	No	No	No
23	0	No	Yes	0.0	Passage	0.0	0	No	0	None	No	No	No
24	0	No	Yes	0.0	Passage	0.0	0	No	0	None	No	No	No

25	0	No	Yes	0.0	Passage	0.0	0	No	0	None	No	No	No
26	0	No	Yes	0.0	Passage	0.0	0	No	0	None	No	No	No
27	0	No	Yes	0.0	Passage	0.0	0	No	0	None	No	No	No
28	0	No	Yes	0.0	Passage	0.0	0	No	0	None	No	No	No
29	0	No	Yes	0.0	Passage	0.0	0	No	0	None	No	No	No
30	0	No	Yes	0.0	Passage	0.0	0	No	0	None	No	No	No
31	0	No	Yes	0.0	Passage	0.0	0	No	0	None	No	No	No
32	0	No	Yes	0.0	Passage	0.0	0	No	0	None	No	No	No

Ped Detector Phase Assignment (MM) 6-3

Mode: NTCIP

Called Phase	Detector
1	1
2	2
3	3
4	4
5	5
6	6
7	7
8	8
9	9
10	10
11	11
12	12
13	13
14	14
15	15
16	16

Ontario, CA

ECONOLITE CONTROL. PRODUCTS, INC.

Solutions that Move the World' Trvl

Milliken Ave @ Guasti - 10.211.51.11 - ASC3 - Econolite Type - ASC/3

Detectors

Detectors - Pg 2

Log - Speed Detector Setup (MM) 6-4

NTCIP Log Period: 60 ECPI Log Period: 0 Length Unit: Inches

Speed Detector	Local Detector	One/Two Detector	Vehicle Length	Trap length	Enable Log
1	0	1	0	0	No
2	0	1	0	0	No
3	0	1	0	0	No
4	0	1	0	0	No
5	0	1	0	0	No
6	0	1	0	0	No
7	0	1	0	0	No
8	0	1	0	0	No
9	0	1	0	0	No
10	0	1	0	0	No
11	0	1	0	0	No
12	0	1	0	0	No
13	0	1	0	0	No
14	0	1	0	0	No
15	0	1	0	0	No
16	0	1	0	0	No

Vehicle Detector Diagnostics (MM) 6-5

Veh Diagnostic Plan Number - 1

Det	Counts	Act	Pres	Multiplier	Failed Time	Failed Call Delay

Veh Diagnostic Plan Number - 2

Det	Counts	Act	Pres	Multiplier	Failed Time	Failed Call Delay

Veh Diagnostic Plan Number - 3

Det	Counts	Act	Pres	Multiplier	Failed Time	Failed Call Delay

Veh Diagnostic Plan Number - 4

Det	Counts	Act	Pres	Multiplier	Failed Time	Failed Call Delay

Pedestrian Detector Diagnostics (MM) 6-6

Ped Diagnostic Plan Number - 1

Det	Counts	Act	Pres	Multiplier

Ped Diagnostic Plan Number - 2

Det	Counts	Act	Pres	Multiplier

Ped Diagnostic Plan Number - 3

Det	Counts	Act	Pres	Multiplier

Ped Diagnostic Plan Number - 4

Det	Counts	Act	Pres	Multiplier

APPENDIX F1



Movement	EBT	EBR	WBL	WBT	NBL	NBR
Lane Configurations	++1*					
Traffic Volume (veh/h)	772	70	66	715	29	11
Future Volume (veh/h)	772	70	66	715	29	11
Initial Q (Qb), veh	0	0	0	0	0	0
Ped-Bike Adj(A_pbT)		1.00	1.00		1.00	1.00
Parking Bus, Adj	1.00	1.00	1.00	1.00	1.00	1.00
Work Zone On Approach	No			No	No	
Adj Sat Flow, veh/h/ln	1900	1900	1900	1900	1900	1900
Adj Flow Rate, veh/h	858	78	73	794	32	12
Peak Hour Factor	0.90	0.90	0.90	0.90	0.90	0.90
Percent Heavy Veh, %	0	0	0	0	0	0
Cap, veh/h	1105	100	103	1809	1872	950
Arrive On Green	0.23	0.23	0.06	0.35	0.53	0.53
Sat Flow, veh/h	5012	438	1810	5358	3510	1610
Grp Volume(v), veh/h	612	324	73	794	32	12
Grp Sat Flow(s),veh/h/ln	1729	1821	1810	1729	1755	1610
Q Serve(g_s), s	18.3	18.4	4.4	12.9	0.5	0.3
Cycle Q Clear(g_c), s	18.3	18.4	4.4	12.9	0.5	0.3
Prop In Lane		0.24	1.00		1.00	1.00
Lane Grp Cap(c), veh/h	789	416	103	1809	1872	950
V/C Ratio(X)	0.78	0.78	0.71	0.44	0.02	0.01
Avail Cap(c_a), veh/h	1100	579	329	2924	1872	950
HCM Platoon Ratio	1.00	1.00	1.00	1.00	1.00	1.00
Upstream Filter(I)	1.00	1.00	0.84	0.84	1.00	1.00
Uniform Delay (d), s/veh	39.8	39.9	51.0	27.6	12.1	9.3
Incr Delay (d2), s/veh	2.3	4.5	5.5	0.1	0.0	0.0
Initial Q Delay(d3),s/veh	0.0	0.0	0.0	0.0	0.0	0.0
%ile BackOfQ(50%),veh/ln	7.6	8.3	2.1	5.1	0.2	0.1
Unsig. Movement Delay, s/veh						
LnGrp Delay(d),s/veh	42.1	44.4	56.5	27.7	12.1	9.3
LnGrp LOS	D	D	E	C	B	A
Approach Vol, veh/h	936			867	44	
Approach Delay, s/veh	42.9			30.1	11.4	
Approach LOS	D			C	B	

Timer - Assigned Phs		2	3	4		8
Phs Duration (G+Y+Rc), s		64.6	13.2	32.1		45.4
Change Period (Y+Rc), s		6.0	7.0	7.0		7.0
Max Green Setting (Gmax), s		35.0	20.0	35.0		62.0
Max Q Clear Time (g_c+I1), s		2.5	6.4	20.4		14.9
Green Ext Time (p_c), s		0.1	0.1	4.7		5.6

Intersection Summary	
HCM 6th Ctrl Delay	36.2
HCM 6th LOS	D



Movement	EBL	EBT	EBR	WBL	WBT	WBR	NBL	NBT	NBR	SBL	SBT	SBR
Lane Configurations				*¡	+++	¡*¡*	*¡*¡	++T*				
Traffic Volume (veh/h)	426	337	20	54	354	358	18	30	12	258	108	409
Future Volume (veh/h)	426	337	20	54	354	358	18	30	12	258	108	409
Initial Q (Qb), veh	0	0	0	0	0	0	0	0	0	0	0	0
Ped-Bike Adj(A_pbT)	1.00		1.00	1.00		1.00	1.00		1.00	1.00		1.00
Parking Bus, Adj	1.00	1.00	1.00	1.00	1.00	1.00	1.00	1.00	1.00	1.00	1.00	1.00
Work Zone On Approach		No			No			No			No	
Adj Sat Flow, veh/h/ln	1900	1900	1900	1900	1900	1900	1900	1900	1900	1900	1900	1900
Adj Flow Rate, veh/h	473	374	22	60	393	398	20	33	13	287	120	454
Peak Hour Factor	0.90	0.90	0.90	0.90	0.90	0.90	0.90	0.90	0.90	0.90	0.90	0.90
Percent Heavy Veh, %	0	0	0	0	0	0	0	0	0	0	0	0
Cap, veh/h	453	1191	69	108	872	477	131	1592	560	334	1727	770
Arrive On Green	0.13	0.24	0.24	0.06	0.17	0.17	0.04	0.42	0.42	0.10	0.48	0.48
Sat Flow, veh/h	3510	5014	292	1810	5187	2834	3510	3787	1331	3510	3610	1609
Grp Volume(v), veh/h	473	257	139	60	393	398	20	30	16	287	120	454
Grp Sat Flow(s),veh/h/ln	1755	1729	1847	1810	1729	1417	1755	1729	1660	1755	1805	1609
Q Serve(g_s), s	20.0	9.5	9.6	5.0	10.6	21.1	0.9	0.8	0.9	12.5	2.8	31.8
Cycle Q Clear(g_c), s	20.0	9.5	9.6	5.0	10.6	21.1	0.9	0.8	0.9	12.5	2.8	31.8
Prop In Lane	1.00		0.16	1.00		1.00	1.00		0.80	1.00		1.00
Lane Grp Cap(c), veh/h	453	822	439	108	872	477	131	1454	698	334	1727	770
V/C Ratio(X)	1.04	0.31	0.32	0.56	0.45	0.84	0.15	0.02	0.02	0.86	0.07	0.59
Avail Cap(c_a), veh/h	453	959	513	233	1439	786	464	1454	698	464	1727	770
HCM Platoon Ratio	1.00	1.00	1.00	1.00	1.00	1.00	1.00	1.00	1.00	1.00	1.00	1.00
Upstream Filter(I)	0.53	0.53	0.53	0.94	0.94	0.94	1.00	1.00	1.00	1.00	1.00	1.00
Uniform Delay (d), s/veh	67.5	48.7	48.7	70.9	58.0	62.4	72.2	26.3	26.3	69.1	21.8	29.4
Incr Delay (d2), s/veh	42.9	0.1	0.2	1.6	0.3	3.0	0.2	0.0	0.1	8.6	0.1	3.3
Initial Q Delay(d3),s/veh	0.0	0.0	0.0	0.0	0.0	0.0	0.0	0.0	0.0	0.0	0.0	0.0
%ile BackOfQ(50%),veh/ln	11.5	4.0	4.4	2.3	4.6	7.6	0.4	0.3	0.4	5.9	1.2	12.5
Unsig. Movement Delay, s/veh												
LnGrp Delay(d),s/veh	110.4	48.7	48.9	72.4	58.3	65.3	72.4	26.3	26.3	77.7	21.9	32.7
LnGrp LOS	F	D	D	E	E	E	E	C	C	E	C	C
Approach Vol, veh/h		869			851			66			861	
Approach Delay, s/veh		82.4			62.6			40.3			46.2	
Approach LOS		F			E			D			D	

Timer - Assigned Phs	1	2	3	4	5	6	7	8
Phs Duration (G+Y+Rc), s	13.3	81.7	27.0	33.1	22.3	72.7	16.2	43.8
Change Period (Y+Rc), s	7.5	7.5	7.0	7.0	7.5	7.5	7.0	7.0
Max Green Setting (Gmax), s	20.5	42.5	20.0	43.0	20.5	42.5	20.0	43.0
Max Q Clear Time (g_c+I1), s	12.9	33.8	22.0	23.1	14.5	2.9	7.0	11.6
Green Ext Time (p_c), s	0.0	1.2	0.0	3.0	0.3	0.2	0.0	1.8

Intersection Summary	
HCM 6th Ctrl Delay	63.2
HCM 6th LOS	E



Movement	EBT	EBR	WBL	WBT	NBL	NBR
Lane Configurations	+++	j*		+++	↰	↱
Traffic Volume (veh/h)	598	9	74	692	74	98
Future Volume (veh/h)	598	9	74	692	74	98
Initial Q (Qb), veh	0	0	0	0	0	0
Ped-Bike Adj(A_pbT)		1.00	1.00		1.00	1.00
Parking Bus, Adj	1.00	1.00	1.00	1.00	1.00	1.00
Work Zone On Approach	No			No	No	
Adj Sat Flow, veh/h/ln	1900	1900	1900	1900	1900	1900
Adj Flow Rate, veh/h	664	0	82	769	82	109
Peak Hour Factor	0.90	0.90	0.90	0.90	0.90	0.90
Percent Heavy Veh, %	0	0	0	0	0	0
Cap, veh/h	1043		107	1754	936	833
Arrive On Green	0.20	0.00	0.02	0.11	0.52	0.52
Sat Flow, veh/h	5358	1610	1810	5358	1810	1610
Grp Volume(v), veh/h	664	0	82	769	82	109
Grp Sat Flow(s),veh/h/ln	1729	1610	1810	1729	1810	1610
Q Serve(g_s), s	10.6	0.0	4.1	12.5	2.1	3.2
Cycle Q Clear(g_c), s	10.6	0.0	4.1	12.5	2.1	3.2
Prop In Lane		1.00	1.00		1.00	1.00
Lane Grp Cap(c), veh/h	1043		107	1754	936	833
V/C Ratio(X)	0.64		0.76	0.44	0.09	0.13
Avail Cap(c_a), veh/h	2017		302	3285	936	833
HCM Platoon Ratio	1.00	1.00	0.33	0.33	1.00	1.00
Upstream Filter(I)	0.82	0.00	0.94	0.94	1.00	1.00
Uniform Delay (d), s/veh	32.9	0.0	43.5	32.0	11.0	11.2
Incr Delay (d2), s/veh	0.6	0.0	7.6	0.2	0.2	0.3
Initial Q Delay(d3),s/veh	0.0	0.0	0.0	0.0	0.0	0.0
%ile BackOfQ(50%),veh/ln	4.4	0.0	2.0	5.5	0.8	1.0
Unsig. Movement Delay, s/veh						
LnGrp Delay(d),s/veh	33.6	0.0	51.1	32.2	11.2	11.6
LnGrp LOS	C		D	C	B	B
Approach Vol, veh/h	664			851	191	
Approach Delay, s/veh	33.6			34.0	11.4	
Approach LOS	C			C	B	

Timer - Assigned Phs	2	3	4		8
Phs Duration (G+Y+Rc), s	52.6	12.3	25.1		37.4
Change Period (Y+Rc), s	6.0	7.0	7.0		7.0
Max Green Setting (Gmax), s	20.0	15.0	35.0		57.0
Max Q Clear Time (g_c+I1), s	5.2	6.1	12.6		14.5
Green Ext Time (p_c), s	0.3	0.1	5.5		6.6

Intersection Summary	
HCM 6th Ctrl Delay	31.3
HCM 6th LOS	C

Notes

Unsignalized Delay for [EBR] is excluded from calculations of the approach delay and intersection delay.



Movement	EBT	EBR	WBL	WBT	NBL	NBR
Lane Configurations	fff	↱	*1	W	W	↱
Traffic Volume (veh/h)	652	44	70	699	67	56
Future Volume (veh/h)	652	44	70	699	67	56
Initial Q (Qb), veh	0	0	0	0	0	0
Ped-Bike Adj(A_pbT)		1.00	1.00		1.00	1.00
Parking Bus, Adj	1.00	1.00	1.00	1.00	1.00	1.00
Work Zone On Approach	No			No	No	
Adj Sat Flow, veh/h/ln	1900	1900	1900	1900	1900	1900
Adj Flow Rate, veh/h	733	0	79	785	91	46
Peak Hour Factor	0.89	0.89	0.89	0.89	0.89	0.89
Percent Heavy Veh, %	0	0	0	0	0	0
Cap, veh/h	1017		139	1818	1868	831
Arrive On Green	0.39	0.00	0.08	0.35	0.52	0.52
Sat Flow, veh/h	5358	1610	1810	5358	3619	1610
Grp Volume(v), veh/h	733	0	79	785	91	46
Grp Sat Flow(s),veh/h/ln	1729	1610	1810	1729	1810	1610
Q Serve(g_s), s	10.8	0.0	3.8	10.4	1.1	1.3
Cycle Q Clear(g_c), s	10.8	0.0	3.8	10.4	1.1	1.3
Prop In Lane		1.00	1.00		1.00	1.00
Lane Grp Cap(c), veh/h	1017		139	1818	1868	831
V/C Ratio(X)	0.72		0.57	0.43	0.05	0.06
Avail Cap(c_a), veh/h	1729		402	3285	1868	831
HCM Platoon Ratio	2.00	2.00	1.00	1.00	1.00	1.00
Upstream Filter(I)	0.84	0.00	1.00	1.00	1.00	1.00
Uniform Delay (d), s/veh	25.3	0.0	40.1	22.4	10.8	10.8
Incr Delay (d2), s/veh	1.0	0.0	1.4	0.2	0.0	0.1
Initial Q Delay(d3),s/veh	0.0	0.0	0.0	0.0	0.0	0.0
%ile BackOfQ(50%),veh/ln	8.5	0.0	1.6	3.9	0.5	0.4
Unsig. Movement Delay, s/veh						
LnGrp Delay(d),s/veh	26.3	0.0	41.5	22.6	10.9	11.0
LnGrp LOS	C		D	C	B	B
Approach Vol, veh/h	733			864	137	
Approach Delay, s/veh	26.3			24.3	10.9	
Approach LOS	C			C	B	

Timer - Assigned Phs	2	3	4		8
Phs Duration (G+Y+Rc), s	51.5	13.9	24.7		38.5
Change Period (Y+Rc), s	5.0	7.0	7.0		7.0
Max Green Setting (Gmax), s	21.0	20.0	30.0		57.0
Max Q Clear Time (g_c+I1), s	3.3	5.8	12.8		12.4
Green Ext Time (p_c), s	0.3	0.1	4.9		6.8

Intersection Summary	
HCM 6th Ctrl Delay	24.1
HCM 6th LOS	C

Notes

User approved volume balancing among the lanes for turning movement.
User approved ignoring U-Turning movement.
Unsignalized Delay for [EBR] is excluded from calculations of the approach delay and intersection delay.

Intersection	
Int Delay, s/veh	0.1

Movement	EBL	EBR	NBL	NBT	SBT	SBR
Lane Configurations		¡*		f+f	+++	¡*
Traffic Vol, veh/h	0	14	0	830	1115	62
Future Vol, veh/h	0	14	0	830	1115	62
Conflicting Peds, #/hr	0	0	0	0	0	0
Sign Control	Stop	Stop	Free	Free	Free	Free
RT Channelized	-	None	-	None	-	None
Storage Length	-	0	-	-	-	175
Veh in Median Storage, #	0	-	-	0	0	-
Grade, %	0	-	-	0	0	-
Peak Hour Factor	97	97	97	97	97	97
Heavy Vehicles, %	0	0	0	0	0	0
Mvmt Flow	0	14	0	856	1149	64

Major/Minor	Minor2		Major1		Major2	
Conflicting Flow All	-	575	-	0	-	0
Stage 1	-	-	-	-	-	-
Stage 2	-	-	-	-	-	-
Critical Hdwy	-	7.1	-	-	-	-
Critical Hdwy Stg 1	-	-	-	-	-	-
Critical Hdwy Stg 2	-	-	-	-	-	-
Follow-up Hdwy	-	3.9	-	-	-	-
Pot Cap-1 Maneuver	0	399	0	-	-	-
Stage 1	0	-	0	-	-	-
Stage 2	0	-	0	-	-	-
Platoon blocked, %				-	-	-
Mov Cap-1 Maneuver	-	399	-	-	-	-
Mov Cap-2 Maneuver	-	-	-	-	-	-
Stage 1	-	-	-	-	-	-
Stage 2	-	-	-	-	-	-

Approach	EB	NB	SB
HCM Control Delay, s	14.4	0	0
HCM LOS	B		

Minor Lane/Major Mvmt	NBT	EBLn1	SBT	SBR
Capacity (veh/h)	-	399	-	-
HCM Lane V/C Ratio	-	0.036	-	-
HCM Control Delay (s)	-	14.4	-	-
HCM Lane LOS	-	B	-	-
HCM 95th %tile Q(veh)	-	0.1	-	-

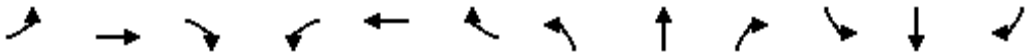

Movement	EBL	EBT	EBR	WBL	WBT	WBR	NBL	NBT	NBR	SBL	SBT	SBR
Lane Configurations	*i	T*		*i	T*		*i	++T*		*i	f+'b	
Traffic Volume (veh/h)	42	0	23	11	0	9	98	779	40	16	1106	7
Future Volume (veh/h)	42	0	23	11	0	9	98	779	40	16	1106	7
Initial Q (Qb), veh	0	0	0	0	0	0	0	0	0	0	0	0
Ped-Bike Adj(A_pbT)	1.00		1.00	1.00		1.00	1.00		1.00	1.00		0.98
Parking Bus, Adj	1.00	1.00	1.00	1.00	1.00	1.00	1.00	1.00	1.00	1.00	1.00	1.00
Work Zone On Approach		No			No			No			No	
Adj Sat Flow, veh/h/ln	1900	1900	1900	1900	1900	1900	1900	1900	1900	1900	1900	1900
Adj Flow Rate, veh/h	45	0	24	12	0	10	104	829	43	17	1177	7
Peak Hour Factor	0.94	0.94	0.94	0.94	0.94	0.94	0.94	0.94	0.94	0.94	0.94	0.94
Percent Heavy Veh, %	0	0	0	0	0	0	0	0	0	0	0	0
Cap, veh/h	140	0	90	127	0	90	133	3895	201	34	3810	23
Arrive On Green	0.06	0.00	0.06	0.06	0.00	0.06	0.07	0.77	0.77	0.02	0.72	0.72
Sat Flow, veh/h	1427	0	1610	1409	0	1610	1810	5050	261	1810	5320	32
Grp Volume(v), veh/h	45	0	24	12	0	10	104	567	305	17	765	419
Grp Sat Flow(s),veh/h/ln	1427	0	1610	1409	0	1610	1810	1729	1853	1810	1729	1894
Q Serve(g_s), s	3.2	0.0	1.5	0.9	0.0	0.6	5.9	4.7	4.7	1.0	8.5	8.5
Cycle Q Clear(g_c), s	3.9	0.0	1.5	2.4	0.0	0.6	5.9	4.7	4.7	1.0	8.5	8.5
Prop In Lane	1.00		1.00	1.00		1.00	1.00		0.14	1.00		0.02
Lane Grp Cap(c), veh/h	140	0	90	127	0	90	133	2667	1429	34	2477	1356
V/C Ratio(X)	0.32	0.00	0.27	0.09	0.00	0.11	0.78	0.21	0.21	0.50	0.31	0.31
Avail Cap(c_a), veh/h	479	0	472	462	0	472	224	2667	1429	224	2477	1356
HCM Platoon Ratio	1.00	1.00	1.00	1.00	1.00	1.00	1.00	1.00	1.00	1.00	1.00	1.00
Upstream Filter(I)	1.00	0.00	1.00	1.00	0.00	1.00	1.00	1.00	1.00	1.00	1.00	1.00
Uniform Delay (d), s/veh	48.9	0.0	47.5	48.6	0.0	47.1	47.8	3.3	3.3	51.0	5.4	5.4
Incr Delay (d2), s/veh	2.8	0.0	3.3	0.7	0.0	1.2	18.7	0.2	0.3	22.8	0.3	0.6
Initial Q Delay(d3),s/veh	0.0	0.0	0.0	0.0	0.0	0.0	0.0	0.0	0.0	0.0	0.0	0.0
%ile BackOfQ(50%),veh/ln	1.3	0.0	0.7	0.3	0.0	0.3	3.3	1.0	1.2	0.6	2.3	2.6
Unsig. Movement Delay, s/veh												
LnGrp Delay(d),s/veh	51.7	0.0	50.9	49.3	0.0	48.3	66.5	3.5	3.6	73.9	5.8	6.0
LnGrp LOS	D	A	D	D	A	D	E	A	A	E	A	A
Approach Vol, veh/h		69			22			976			1201	
Approach Delay, s/veh		51.4			48.8			10.2			6.8	
Approach LOS		D			D			B			A	

Timer - Assigned Phs	1	2		4	5	6		8				
Phs Duration (G+Y+Rc), s	6.0	87.0		12.1	11.7	81.2		12.1				
Change Period (Y+Rc), s	4.0	* 6		6.2	4.0	* 6		6.2				
Max Green Setting (Gmax), s	13.0	* 45		30.8	13.0	* 45		30.8				
Max Q Clear Time (g_c+I1), s	3.0	6.7		5.9	7.9	10.5		4.4				
Green Ext Time (p_c), s	0.0	11.9		0.4	0.2	16.6		0.1				

Intersection Summary		
HCM 6th Ctrl Delay		10.0
HCM 6th LOS		B

Notes

* HCM 6th computational engine requires equal clearance times for the phases crossing the barrier.



Movement	EBT	EBR	WBL	WBT	NBL	NBR
Lane Configurations	++1*					
Traffic Volume (veh/h)	1478	107	61	772	36	37
Future Volume (veh/h)	1478	107	61	772	36	37
Initial Q (Qb), veh	0	0	0	0	0	0
Ped-Bike Adj(A_pbT)		1.00	1.00		1.00	1.00
Parking Bus, Adj	1.00	1.00	1.00	1.00	1.00	1.00
Work Zone On Approach	No			No	No	
Adj Sat Flow, veh/h/ln	1900	1900	1900	1900	1900	1900
Adj Flow Rate, veh/h	1540	111	64	804	38	39
Peak Hour Factor	0.96	0.96	0.96	0.96	0.96	0.96
Percent Heavy Veh, %	0	0	0	0	0	0
Cap, veh/h	1571	113	99	2264	1563	805
Arrive On Green	0.32	0.32	0.05	0.44	0.45	0.45
Sat Flow, veh/h	5109	356	1810	5358	3510	1610
Grp Volume(v), veh/h	1078	573	64	804	38	39
Grp Sat Flow(s),veh/h/ln	1729	1836	1810	1729	1755	1610
Q Serve(g_s), s	34.0	34.0	3.8	11.4	0.7	1.4
Cycle Q Clear(g_c), s	34.0	34.0	3.8	11.4	0.7	1.4
Prop In Lane		0.19	1.00		1.00	1.00
Lane Grp Cap(c), veh/h	1100	584	99	2264	1563	805
V/C Ratio(X)	0.98	0.98	0.65	0.36	0.02	0.05
Avail Cap(c_a), veh/h	1100	584	329	2924	1563	805
HCM Platoon Ratio	1.00	1.00	1.00	1.00	1.00	1.00
Upstream Filter(I)	1.00	1.00	0.85	0.85	1.00	1.00
Uniform Delay (d), s/veh	37.2	37.2	51.0	20.7	17.1	14.1
Incr Delay (d2), s/veh	22.3	32.2	4.4	0.1	0.0	0.1
Initial Q Delay(d3),s/veh	0.0	0.0	0.0	0.0	0.0	0.0
%ile BackOfQ(50%),veh/ln	16.8	19.4	1.8	4.3	0.3	0.5
Unsig. Movement Delay, s/veh						
LnGrp Delay(d),s/veh	59.5	69.3	55.4	20.8	17.1	14.2
LnGrp LOS	E	E	E	C	B	B
Approach Vol, veh/h	1651			868	77	
Approach Delay, s/veh	62.9			23.3	15.6	
Approach LOS	E			C	B	

Timer - Assigned Phs		2	3	4		8
Phs Duration (G+Y+Rc), s		55.0	13.0	42.0		55.0
Change Period (Y+Rc), s		6.0	7.0	7.0		7.0
Max Green Setting (Gmax), s		35.0	20.0	35.0		62.0
Max Q Clear Time (g_c+I1), s		3.4	5.8	36.0		13.4
Green Ext Time (p_c), s		0.2	0.1	0.0		5.7

Intersection Summary	
HCM 6th Ctrl Delay	48.3
HCM 6th LOS	D



Movement	EBL	EBT	EBR	WBL	WBT	WBR	NBL	NBT	NBR	SBL	SBT	SBR
Lane Configurations				*i	+++	i*i*	*i*i	++T*				
Traffic Volume (veh/h)	739	759	17	56	455	500	12	74	49	405	98	366
Future Volume (veh/h)	739	759	17	56	455	500	12	74	49	405	98	366
Initial Q (Qb), veh	0	0	0	0	0	0	0	0	0	0	0	0
Ped-Bike Adj(A_pbT)	1.00		1.00	1.00		1.00	1.00		1.00	1.00		1.00
Parking Bus, Adj	1.00	1.00	1.00	1.00	1.00	1.00	1.00	1.00	1.00	1.00	1.00	1.00
Work Zone On Approach		No			No			No			No	
Adj Sat Flow, veh/h/ln	1900	1900	1900	1900	1900	1900	1900	1900	1900	1900	1900	1900
Adj Flow Rate, veh/h	786	807	18	60	484	532	13	79	52	431	104	389
Peak Hour Factor	0.94	0.94	0.94	0.94	0.94	0.94	0.94	0.94	0.94	0.94	0.94	0.94
Percent Heavy Veh, %	0	0	0	0	0	0	0	0	0	0	0	0
Cap, veh/h	453	1491	33	108	1121	613	97	1160	540	464	1588	709
Arrive On Green	0.13	0.29	0.29	0.06	0.22	0.22	0.03	0.34	0.34	0.13	0.44	0.44
Sat Flow, veh/h	3510	5221	116	1810	5187	2834	3510	3458	1610	3510	3610	1610
Grp Volume(v), veh/h	786	534	291	60	484	532	13	79	52	431	104	389
Grp Sat Flow(s),veh/h/ln	1755	1729	1879	1810	1729	1417	1755	1729	1610	1755	1805	1610
Q Serve(g_s), s	20.0	20.2	20.3	5.0	12.5	28.1	0.6	2.4	3.4	18.8	2.6	27.6
Cycle Q Clear(g_c), s	20.0	20.2	20.3	5.0	12.5	28.1	0.6	2.4	3.4	18.8	2.6	27.6
Prop In Lane	1.00		0.06	1.00		1.00	1.00		1.00	1.00		1.00
Lane Grp Cap(c), veh/h	453	988	537	108	1121	613	97	1160	540	464	1588	709
V/C Ratio(X)	1.74	0.54	0.54	0.56	0.43	0.87	0.13	0.07	0.10	0.93	0.07	0.55
Avail Cap(c_a), veh/h	453	988	537	233	1439	786	464	1160	540	464	1588	709
HCM Platoon Ratio	1.00	1.00	1.00	1.00	1.00	1.00	1.00	1.00	1.00	1.00	1.00	1.00
Upstream Filter(I)	0.46	0.46	0.46	0.94	0.94	0.94	1.00	1.00	1.00	1.00	1.00	1.00
Uniform Delay (d), s/veh	67.5	46.8	46.8	70.9	52.5	58.6	73.5	35.0	35.4	66.5	25.0	32.0
Incr Delay (d2), s/veh	335.1	0.2	0.4	1.6	0.2	7.4	0.2	0.1	0.4	24.7	0.1	3.0
Initial Q Delay(d3),s/veh	0.0	0.0	0.0	0.0	0.0	0.0	0.0	0.0	0.0	0.0	0.0	0.0
%ile BackOfQ(50%),veh/ln	29.8	8.5	9.4	2.3	5.3	10.4	0.3	1.0	1.4	9.8	1.1	11.0
Unsig. Movement Delay, s/veh												
LnGrp Delay(d),s/veh	402.6	47.0	47.2	72.4	52.7	66.0	73.8	35.1	35.7	91.2	25.1	35.1
LnGrp LOS	F	D	D	E	D	E	E	D	D	F	C	D
Approach Vol, veh/h		1611			1076			144			924	
Approach Delay, s/veh		220.5			60.4			38.8			60.1	
Approach LOS		F			E			D			E	

Timer - Assigned Phs	1	2	3	4	5	6	7	8
Phs Duration (G+Y+Rc), s	31.8	75.7	27.0	40.5	28.0	59.5	16.2	51.3
Change Period (Y+Rc), s	7.5	7.5	7.0	7.0	7.5	7.5	7.0	7.0
Max Green Setting (Gmax), s	20.5	42.5	20.0	43.0	20.5	42.5	20.0	43.0
Max Q Clear Time (g_c+I1), s	12.6	29.6	22.0	30.1	20.8	5.4	7.0	22.3
Green Ext Time (p_c), s	0.0	1.2	0.0	3.4	0.0	0.6	0.0	3.7

Intersection Summary	
HCM 6th Ctrl Delay	128.2
HCM 6th LOS	F



Movement	EBT	EBR	WBL	WBT	NBL	NBR
Lane Configurations	+++	j*		+++	↰	↱
Traffic Volume (veh/h)	1206	7	65	886	125	219
Future Volume (veh/h)	1206	7	65	886	125	219
Initial Q (Qb), veh	0	0	0	0	0	0
Ped-Bike Adj(A_pbT)		1.00	1.00		1.00	1.00
Parking Bus, Adj	1.00	1.00	1.00	1.00	1.00	1.00
Work Zone On Approach	No			No	No	
Adj Sat Flow, veh/h/ln	1900	1900	1900	1900	1900	1900
Adj Flow Rate, veh/h	1340	0	72	984	139	243
Peak Hour Factor	0.90	0.90	0.90	0.90	0.90	0.90
Percent Heavy Veh, %	0	0	0	0	0	0
Cap, veh/h	1769		101	2461	690	614
Arrive On Green	0.34	0.00	0.02	0.16	0.38	0.38
Sat Flow, veh/h	5358	1610	1810	5358	1810	1610
Grp Volume(v), veh/h	1340	0	72	984	139	243
Grp Sat Flow(s),veh/h/ln	1729	1610	1810	1729	1810	1610
Q Serve(g_s), s	20.7	0.0	3.6	15.4	4.6	9.9
Cycle Q Clear(g_c), s	20.7	0.0	3.6	15.4	4.6	9.9
Prop In Lane		1.00	1.00		1.00	1.00
Lane Grp Cap(c), veh/h	1769		101	2461	690	614
V/C Ratio(X)	0.76		0.72	0.40	0.20	0.40
Avail Cap(c_a), veh/h	2017		302	3285	690	614
HCM Platoon Ratio	1.00	1.00	0.33	0.33	1.00	1.00
Upstream Filter(I)	0.60	0.00	0.94	0.94	1.00	1.00
Uniform Delay (d), s/veh	26.3	0.0	43.5	26.4	18.7	20.3
Incr Delay (d2), s/veh	1.0	0.0	6.4	0.1	0.7	1.9
Initial Q Delay(d3),s/veh	0.0	0.0	0.0	0.0	0.0	0.0
%ile BackOfQ(50%),veh/ln	8.3	0.0	1.7	7.0	1.9	3.7
Unsig. Movement Delay, s/veh						
LnGrp Delay(d),s/veh	27.3	0.0	49.9	26.5	19.3	22.2
LnGrp LOS	C		D	C	B	C
Approach Vol, veh/h	1340			1056	382	
Approach Delay, s/veh	27.3			28.1	21.2	
Approach LOS	C			C	C	

Timer - Assigned Phs	2	3	4		8
Phs Duration (G+Y+Rc), s	40.3	12.0	37.7		49.7
Change Period (Y+Rc), s	6.0	7.0	7.0		7.0
Max Green Setting (Gmax), s	20.0	15.0	35.0		57.0
Max Q Clear Time (g_c+I1), s	11.9	5.6	22.7		17.4
Green Ext Time (p_c), s	0.6	0.1	8.0		8.9

Intersection Summary	
HCM 6th Ctrl Delay	26.8
HCM 6th LOS	C

Notes

Unsignalized Delay for [EBR] is excluded from calculations of the approach delay and intersection delay.



Movement	EBT	EBR	WBL	WBT	NBL	NBR
Lane Configurations	fff	↱	*1	W	W	↱
Traffic Volume (veh/h)	1397	28	57	889	62	70
Future Volume (veh/h)	1397	28	57	889	62	70
Initial Q (Qb), veh	0	0	0	0	0	0
Ped-Bike Adj(A_pbT)		1.00	1.00		1.00	1.00
Parking Bus, Adj	1.00	1.00	1.00	1.00	1.00	1.00
Work Zone On Approach	No			No	No	
Adj Sat Flow, veh/h/ln	1900	1900	1900	1900	1900	1900
Adj Flow Rate, veh/h	1588	0	65	1010	98	50
Peak Hour Factor	0.88	0.88	0.88	0.88	0.88	0.88
Percent Heavy Veh, %	0	0	0	0	0	0
Cap, veh/h	1694		129	2468	1415	629
Arrive On Green	0.65	0.00	0.07	0.48	0.39	0.39
Sat Flow, veh/h	5358	1610	1810	5358	3619	1610
Grp Volume(v), veh/h	1588	0	65	1010	98	50
Grp Sat Flow(s),veh/h/ln	1729	1610	1810	1729	1810	1610
Q Serve(g_s), s	24.7	0.0	3.1	11.4	1.5	1.8
Cycle Q Clear(g_c), s	24.7	0.0	3.1	11.4	1.5	1.8
Prop In Lane		1.00	1.00		1.00	1.00
Lane Grp Cap(c), veh/h	1694		129	2468	1415	629
V/C Ratio(X)	0.94		0.50	0.41	0.07	0.08
Avail Cap(c_a), veh/h	1729		402	3285	1415	629
HCM Platoon Ratio	2.00	2.00	1.00	1.00	1.00	1.00
Upstream Filter(I)	0.66	0.00	1.00	1.00	1.00	1.00
Uniform Delay (d), s/veh	14.8	0.0	40.3	15.4	17.2	17.2
Incr Delay (d2), s/veh	7.3	0.0	1.1	0.1	0.1	0.2
Initial Q Delay(d3),s/veh	0.0	0.0	0.0	0.0	0.0	0.0
%ile BackOfQ(50%),veh/ln	5.4	0.0	1.3	3.9	0.7	0.6
Unsig. Movement Delay, s/veh						
LnGrp Delay(d),s/veh	22.1	0.0	41.4	15.5	17.3	17.5
LnGrp LOS	C		D	B	B	B
Approach Vol, veh/h	1588			1075	148	
Approach Delay, s/veh	22.1			17.1	17.3	
Approach LOS	C			B	B	

Timer - Assigned Phs	2	3	4		8
Phs Duration (G+Y+Rc), s	40.2	13.4	36.4		49.8
Change Period (Y+Rc), s	5.0	7.0	7.0		7.0
Max Green Setting (Gmax), s	21.0	20.0	30.0		57.0
Max Q Clear Time (g_c+I1), s	3.8	5.1	26.7		13.4
Green Ext Time (p_c), s	0.3	0.0	2.7		9.4

Intersection Summary	
HCM 6th Ctrl Delay	19.9
HCM 6th LOS	B

Notes

User approved volume balancing among the lanes for turning movement.
User approved ignoring U-Turning movement.
Unsignalized Delay for [EBR] is excluded from calculations of the approach delay and intersection delay.

Intersection	
Int Delay, s/veh	0.2

Movement	EBL	EBR	NBL	NBT	SBT	SBR
Lane Configurations		¡*		f+f	+++	¡*
Traffic Vol, veh/h	0	39	0	1870	967	28
Future Vol, veh/h	0	39	0	1870	967	28
Conflicting Peds, #/hr	0	0	0	0	0	0
Sign Control	Stop	Stop	Free	Free	Free	Free
RT Channelized	-	None	-	None	-	None
Storage Length	-	0	-	-	-	175
Veh in Median Storage, #	0	-	-	0	0	-
Grade, %	0	-	-	0	0	-
Peak Hour Factor	95	95	95	95	95	95
Heavy Vehicles, %	0	0	0	0	0	0
Mvmt Flow	0	41	0	1968	1018	29

Major/Minor	Minor2		Major1		Major2	
Conflicting Flow All	-	509	-	0	-	0
Stage 1	-	-	-	-	-	-
Stage 2	-	-	-	-	-	-
Critical Hdwy	-	7.1	-	-	-	-
Critical Hdwy Stg 1	-	-	-	-	-	-
Critical Hdwy Stg 2	-	-	-	-	-	-
Follow-up Hdwy	-	3.9	-	-	-	-
Pot Cap-1 Maneuver	0	440	0	-	-	-
Stage 1	0	-	0	-	-	-
Stage 2	0	-	0	-	-	-
Platoon blocked, %				-	-	-
Mov Cap-1 Maneuver	-	440	-	-	-	-
Mov Cap-2 Maneuver	-	-	-	-	-	-
Stage 1	-	-	-	-	-	-
Stage 2	-	-	-	-	-	-

Approach	EB	NB	SB
HCM Control Delay, s	14	0	0
HCM LOS	B		

Minor Lane/Major Mvmt	NBT	EBLn1	SBT	SBR
Capacity (veh/h)	-	440	-	-
HCM Lane V/C Ratio	-	0.093	-	-
HCM Control Delay (s)	-	14	-	-
HCM Lane LOS	-	B	-	-
HCM 95th %tile Q(veh)	-	0.3	-	-

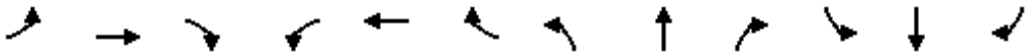

Movement	EBL	EBT	EBR	WBL	WBT	WBR	NBL	NBT	NBR	SBL	SBT	SBR
Lane Configurations	*i	T*		*i	T*		*i	++T*		*i	f+'b	
Traffic Volume (veh/h)	127	2	79	26	3	30	70	1713	8	14	985	7
Future Volume (veh/h)	127	2	79	26	3	30	70	1713	8	14	985	7
Initial Q (Qb), veh	0	0	0	0	0	0	0	0	0	0	0	0
Ped-Bike Adj(A_pbT)	1.00		1.00	1.00		1.00	1.00		0.98	1.00		1.00
Parking Bus, Adj	1.00	1.00	1.00	1.00	1.00	1.00	1.00	1.00	1.00	1.00	1.00	1.00
Work Zone On Approach		No			No			No			No	
Adj Sat Flow, veh/h/ln	1900	1900	1900	1900	1900	1900	1900	1900	1900	1900	1900	1900
Adj Flow Rate, veh/h	135	2	84	28	3	32	74	1822	9	15	1048	7
Peak Hour Factor	0.94	0.94	0.94	0.94	0.94	0.94	0.94	0.94	0.94	0.94	0.94	0.94
Percent Heavy Veh, %	0	0	0	0	0	0	0	0	0	0	0	0
Cap, veh/h	242	5	229	195	20	217	97	3679	18	30	3477	23
Arrive On Green	0.15	0.15	0.15	0.15	0.15	0.15	0.05	0.69	0.69	0.02	0.65	0.65
Sat Flow, veh/h	1395	38	1578	1332	140	1492	1810	5326	26	1810	5316	36
Grp Volume(v), veh/h	135	0	86	28	0	35	74	1183	648	15	682	373
Grp Sat Flow(s),veh/h/ln	1395	0	1616	1332	0	1632	1810	1729	1895	1810	1729	1893
Q Serve(g_s), s	10.3	0.0	5.3	2.1	0.0	2.1	4.4	17.7	17.7	0.9	9.3	9.3
Cycle Q Clear(g_c), s	12.4	0.0	5.3	7.4	0.0	2.1	4.4	17.7	17.7	0.9	9.3	9.3
Prop In Lane	1.00		0.98	1.00		0.91	1.00		0.01	1.00		0.02
Lane Grp Cap(c), veh/h	242	0	235	195	0	237	97	2389	1309	30	2262	1238
V/C Ratio(X)	0.56	0.00	0.37	0.14	0.00	0.15	0.77	0.50	0.50	0.50	0.30	0.30
Avail Cap(c_a), veh/h	443	0	467	387	0	472	197	2389	1309	197	2262	1238
HCM Platoon Ratio	1.00	1.00	1.00	1.00	1.00	1.00	1.00	1.00	1.00	1.00	1.00	1.00
Upstream Filter(I)	1.00	0.00	1.00	1.00	0.00	1.00	1.00	1.00	1.00	1.00	1.00	1.00
Uniform Delay (d), s/veh	46.5	0.0	42.4	45.8	0.0	41.1	51.4	8.0	8.0	53.6	8.2	8.2
Incr Delay (d2), s/veh	4.2	0.0	2.0	0.7	0.0	0.6	23.0	0.7	1.3	24.5	0.3	0.6
Initial Q Delay(d3),s/veh	0.0	0.0	0.0	0.0	0.0	0.0	0.0	0.0	0.0	0.0	0.0	0.0
%ile BackOfQ(50%),veh/ln	3.9	0.0	2.3	0.8	0.0	0.9	2.6	5.3	6.1	0.6	3.0	3.4
Unsig. Movement Delay, s/veh												
LnGrp Delay(d),s/veh	50.7	0.0	44.5	46.5	0.0	41.7	74.4	8.7	9.3	78.1	8.5	8.8
LnGrp LOS	D	A	D	D	A	D	E	A	A	E	A	A
Approach Vol, veh/h		221			63			1905			1070	
Approach Delay, s/veh		48.3			43.8			11.5			9.6	
Approach LOS		D			D			B			A	

Timer - Assigned Phs	1	2		4	5	6		8				
Phs Duration (G+Y+Rc), s	5.8	82.0		22.2	9.9	77.9		22.2				
Change Period (Y+Rc), s	4.0	* 6		6.2	4.0	* 6		6.2				
Max Green Setting (Gmax), s	12.0	* 50		31.8	12.0	* 50		31.8				
Max Q Clear Time (g_c+I1), s	2.9	19.7		14.4	6.4	11.3		9.4				
Green Ext Time (p_c), s	0.0	23.9		1.6	0.1	15.1		0.4				

Intersection Summary		
HCM 6th Ctrl Delay		14.0
HCM 6th LOS		B

Notes

* HCM 6th computational engine requires equal clearance times for the phases crossing the barrier.



Movement	EBT	EBR	WBL	WBT	NBL	NBR
Lane Configurations	++1*					
Traffic Volume (veh/h)	873	144	69	746	198	29
Future Volume (veh/h)	873	144	69	746	198	29
Initial Q (Qb), veh	0	0	0	0	0	0
Ped-Bike Adj(A_pbT)		1.00	1.00		1.00	1.00
Parking Bus, Adj	1.00	1.00	1.00	1.00	1.00	1.00
Work Zone On Approach	No			No	No	
Adj Sat Flow, veh/h/ln	1900	1900	1900	1900	1900	1900
Adj Flow Rate, veh/h	970	160	77	829	220	32
Peak Hour Factor	0.90	0.90	0.90	0.90	0.90	0.90
Percent Heavy Veh, %	0	0	0	0	0	0
Cap, veh/h	1144	188	104	1952	1775	907
Arrive On Green	0.26	0.26	0.06	0.38	0.51	0.51
Sat Flow, veh/h	4658	738	1810	5358	3510	1610
Grp Volume(v), veh/h	747	383	77	829	220	32
Grp Sat Flow(s),veh/h/ln	1729	1767	1810	1729	1755	1610
Q Serve(g_s), s	22.6	22.7	4.6	13.1	3.6	1.0
Cycle Q Clear(g_c), s	22.6	22.7	4.6	13.1	3.6	1.0
Prop In Lane		0.42	1.00		1.00	1.00
Lane Grp Cap(c), veh/h	882	451	104	1952	1775	907
V/C Ratio(X)	0.85	0.85	0.74	0.42	0.12	0.04
Avail Cap(c_a), veh/h	975	498	395	2924	1775	907
HCM Platoon Ratio	1.00	1.00	1.00	1.00	1.00	1.00
Upstream Filter(I)	1.00	1.00	0.83	0.83	1.00	1.00
Uniform Delay (d), s/veh	38.9	39.0	51.0	25.5	14.3	10.7
Incr Delay (d2), s/veh	6.5	12.2	6.2	0.1	0.1	0.1
Initial Q Delay(d3),s/veh	0.0	0.0	0.0	0.0	0.0	0.0
%ile BackOfQ(50%),veh/ln	9.8	10.8	2.2	5.0	1.5	0.3
Unsig. Movement Delay, s/veh						
LnGrp Delay(d),s/veh	45.5	51.2	57.2	25.6	14.5	10.8
LnGrp LOS	D	D	E	C	B	B
Approach Vol, veh/h	1130			906	252	
Approach Delay, s/veh	47.4			28.3	14.0	
Approach LOS	D			C	B	

Timer - Assigned Phs		2	3	4		8
Phs Duration (G+Y+Rc), s		61.6	13.3	35.1		48.4
Change Period (Y+Rc), s		6.0	7.0	7.0		7.0
Max Green Setting (Gmax), s		35.0	24.0	31.0		62.0
Max Q Clear Time (g_c+I1), s		5.6	6.6	24.7		15.1
Green Ext Time (p_c), s		0.7	0.1	3.4		5.9

Intersection Summary	
HCM 6th Ctrl Delay	36.2
HCM 6th LOS	D



Movement	EBL	EBT	EBR	WBL	WBT	WBR	NBL	NBT	NBR	SBL	SBT	SBR
Lane Configurations				*i	+++	i*i*	*i*i	++T*				
Traffic Volume (veh/h)	530	342	30	59	360	364	33	121	28	301	229	422
Future Volume (veh/h)	530	342	30	59	360	364	33	121	28	301	229	422
Initial Q (Qb), veh	0	0	0	0	0	0	0	0	0	0	0	0
Ped-Bike Adj(A_pbT)	1.00		1.00	1.00		1.00	1.00		1.00	1.00		1.00
Parking Bus, Adj	1.00	1.00	1.00	1.00	1.00	1.00	1.00	1.00	1.00	1.00	1.00	1.00
Work Zone On Approach		No			No			No			No	
Adj Sat Flow, veh/h/ln	1900	1900	1900	1900	1900	1900	1900	1900	1900	1900	1900	1900
Adj Flow Rate, veh/h	589	380	33	66	400	404	37	134	31	334	254	469
Peak Hour Factor	0.90	0.90	0.90	0.90	0.90	0.90	0.90	0.90	0.90	0.90	0.90	0.90
Percent Heavy Veh, %	0	0	0	0	0	0	0	0	0	0	0	0
Cap, veh/h	453	1162	99	110	884	483	180	1726	377	380	1668	743
Arrive On Green	0.13	0.24	0.24	0.06	0.17	0.17	0.05	0.41	0.41	0.11	0.46	0.46
Sat Flow, veh/h	3510	4867	417	1810	5187	2834	3510	4260	930	3510	3610	1609
Grp Volume(v), veh/h	589	268	145	66	400	404	37	107	58	334	254	469
Grp Sat Flow(s),veh/h/ln	1755	1729	1825	1810	1729	1417	1755	1729	1733	1755	1805	1609
Q Serve(g_s), s	20.0	9.9	10.2	5.5	10.7	21.4	1.6	3.0	3.2	14.5	6.3	34.3
Cycle Q Clear(g_c), s	20.0	9.9	10.2	5.5	10.7	21.4	1.6	3.0	3.2	14.5	6.3	34.3
Prop In Lane	1.00		0.23	1.00		1.00	1.00		0.54	1.00		1.00
Lane Grp Cap(c), veh/h	453	826	436	110	884	483	180	1401	702	380	1668	743
V/C Ratio(X)	1.30	0.33	0.33	0.60	0.45	0.84	0.21	0.08	0.08	0.88	0.15	0.63
Avail Cap(c_a), veh/h	453	959	506	233	1439	786	464	1401	702	464	1668	743
HCM Platoon Ratio	1.00	1.00	1.00	1.00	1.00	1.00	1.00	1.00	1.00	1.00	1.00	1.00
Upstream Filter(I)	0.48	0.48	0.48	0.96	0.96	0.96	1.00	1.00	1.00	1.00	1.00	1.00
Uniform Delay (d), s/veh	67.5	48.7	48.8	71.0	57.8	62.2	70.5	28.3	28.4	68.1	24.1	31.7
Incr Delay (d2), s/veh	143.0	0.1	0.2	1.9	0.3	3.2	0.2	0.1	0.2	13.3	0.2	4.0
Initial Q Delay(d3),s/veh	0.0	0.0	0.0	0.0	0.0	0.0	0.0	0.0	0.0	0.0	0.0	0.0
%ile BackOfQ(50%),veh/ln	17.8	4.2	4.6	2.6	4.6	7.7	0.7	1.3	1.4	7.1	2.7	13.7
Unsig. Movement Delay, s/veh												
LnGrp Delay(d),s/veh	210.5	48.8	48.9	72.8	58.0	65.4	70.7	28.4	28.6	81.4	24.3	35.7
LnGrp LOS	F	D	D	E	E	E	E	C	C	F	C	D
Approach Vol, veh/h		1002			870			202			1057	
Approach Delay, s/veh		143.8			62.6			36.2			47.4	
Approach LOS		F			E			D			D	

Timer - Assigned Phs	1	2	3	4	5	6	7	8
Phs Duration (G+Y+Rc), s	15.5	79.1	27.0	33.4	24.3	70.3	16.4	44.0
Change Period (Y+Rc), s	7.5	7.5	7.0	7.0	7.5	7.5	7.0	7.0
Max Green Setting (Gmax), s	20.5	42.5	20.0	43.0	20.5	42.5	20.0	43.0
Max Q Clear Time (g_c+I1), s	13.6	36.3	22.0	23.4	16.5	5.2	7.5	12.2
Green Ext Time (p_c), s	0.0	1.4	0.0	3.1	0.3	0.8	0.0	1.8

Intersection Summary	
HCM 6th Ctrl Delay	81.8
HCM 6th LOS	F



Movement	EBT	EBR	WBL	WBT	NBL	NBR
Lane Configurations	+++	j*		+++	↰	↱
Traffic Volume (veh/h)	654	17	248	707	75	215
Future Volume (veh/h)	654	17	248	707	75	215
Initial Q (Qb), veh	0	0	0	0	0	0
Ped-Bike Adj(A_pbT)		1.00	1.00		1.00	1.00
Parking Bus, Adj	1.00	1.00	1.00	1.00	1.00	1.00
Work Zone On Approach	No			No	No	
Adj Sat Flow, veh/h/ln	1900	1900	1900	1900	1900	1900
Adj Flow Rate, veh/h	727	0	276	786	83	239
Peak Hour Factor	0.90	0.90	0.90	0.90	0.90	0.90
Percent Heavy Veh, %	0	0	0	0	0	0
Cap, veh/h	1136		241	2231	770	685
Arrive On Green	0.22	0.00	0.27	0.86	0.43	0.43
Sat Flow, veh/h	5358	1610	1810	5358	1810	1610
Grp Volume(v), veh/h	727	0	276	786	83	239
Grp Sat Flow(s),veh/h/ln	1729	1610	1810	1729	1810	1610
Q Serve(g_s), s	11.5	0.0	12.0	2.7	2.5	9.0
Cycle Q Clear(g_c), s	11.5	0.0	12.0	2.7	2.5	9.0
Prop In Lane		1.00	1.00		1.00	1.00
Lane Grp Cap(c), veh/h	1136		241	2231	770	685
V/C Ratio(X)	0.64		1.14	0.35	0.11	0.35
Avail Cap(c_a), veh/h	2132		241	3227	770	685
HCM Platoon Ratio	1.00	1.00	2.00	2.00	1.00	1.00
Upstream Filter(I)	0.79	0.00	0.93	0.93	1.00	1.00
Uniform Delay (d), s/veh	31.9	0.0	33.0	3.8	15.6	17.4
Incr Delay (d2), s/veh	0.6	0.0	100.4	0.1	0.3	1.4
Initial Q Delay(d3),s/veh	0.0	0.0	0.0	0.0	0.0	0.0
%ile BackOfQ(50%),veh/ln	4.7	0.0	10.8	0.7	1.0	3.2
Unsig. Movement Delay, s/veh						
LnGrp Delay(d),s/veh	32.5	0.0	133.4	3.9	15.8	18.8
LnGrp LOS	C		F	A	B	B
Approach Vol, veh/h	727			1062	322	
Approach Delay, s/veh	32.5			37.5	18.1	
Approach LOS	C			D	B	

Timer - Assigned Phs	2	3	4		8
Phs Duration (G+Y+Rc), s	44.3	19.0	26.7		45.7
Change Period (Y+Rc), s	6.0	7.0	7.0		7.0
Max Green Setting (Gmax), s	21.0	12.0	37.0		56.0
Max Q Clear Time (g_c+I1), s	11.0	14.0	13.5		4.7
Green Ext Time (p_c), s	0.5	0.0	6.2		6.9

Intersection Summary	
HCM 6th Ctrl Delay	32.8
HCM 6th LOS	C

Notes

Unsignalized Delay for [EBR] is excluded from calculations of the approach delay and intersection delay.



Movement	EBT	EBR	WBL	WBT	NBL	NBR
Lane Configurations	fff	↱	*1	W	W	↱
Traffic Volume (veh/h)	825	44	76	856	98	150
Future Volume (veh/h)	825	44	76	856	98	150
Initial Q (Qb), veh	0	0	0	0	0	0
Ped-Bike Adj(A_pbT)		1.00	1.00		1.00	1.00
Parking Bus, Adj	1.00	1.00	1.00	1.00	1.00	1.00
Work Zone On Approach	No			No	No	
Adj Sat Flow, veh/h/ln	1900	1900	1900	1900	1900	1900
Adj Flow Rate, veh/h	927	0	85	962	93	187
Peak Hour Factor	0.89	0.89	0.89	0.89	0.89	0.89
Percent Heavy Veh, %	0	0	0	0	0	0
Cap, veh/h	1271		142	2080	843	1499
Arrive On Green	0.08	0.00	0.08	0.40	0.47	0.47
Sat Flow, veh/h	5358	1610	1810	5358	1810	3220
Grp Volume(v), veh/h	927	0	85	962	93	187
Grp Sat Flow(s),veh/h/ln	1729	1610	1810	1729	1810	1610
Q Serve(g_s), s	15.7	0.0	4.1	12.3	2.6	3.0
Cycle Q Clear(g_c), s	15.7	0.0	4.1	12.3	2.6	3.0
Prop In Lane		1.00	1.00		1.00	1.00
Lane Grp Cap(c), veh/h	1271		142	2080	843	1499
V/C Ratio(X)	0.73		0.60	0.46	0.11	0.12
Avail Cap(c_a), veh/h	1556		462	3285	843	1499
HCM Platoon Ratio	0.33	0.33	1.00	1.00	1.00	1.00
Upstream Filter(I)	0.84	0.00	1.00	1.00	1.00	1.00
Uniform Delay (d), s/veh	38.4	0.0	40.1	19.8	13.5	13.6
Incr Delay (d2), s/veh	1.3	0.0	1.5	0.2	0.3	0.2
Initial Q Delay(d3),s/veh	0.0	0.0	0.0	0.0	0.0	0.0
%ile BackOfQ(50%),veh/ln	7.3	0.0	1.8	4.4	1.1	1.0
Unsig. Movement Delay, s/veh						
LnGrp Delay(d),s/veh	39.7	0.0	41.6	20.0	13.8	13.8
LnGrp LOS	D		D	C	B	B
Approach Vol, veh/h	927			1047	280	
Approach Delay, s/veh	39.7			21.8	13.8	
Approach LOS	D			C	B	

Timer - Assigned Phs	2	3	4		8
Phs Duration (G+Y+Rc), s	46.9	14.0	29.0		43.1
Change Period (Y+Rc), s	5.0	7.0	7.0		7.0
Max Green Setting (Gmax), s	21.0	23.0	27.0		57.0
Max Q Clear Time (g_c+I1), s	5.0	6.1	17.7		14.3
Green Ext Time (p_c), s	0.7	0.1	4.3		8.8

Intersection Summary	
HCM 6th Ctrl Delay	28.2
HCM 6th LOS	C

Notes

User approved volume balancing among the lanes for turning movement.
User approved ignoring U-Turning movement.
Unsignalized Delay for [EBR] is excluded from calculations of the approach delay and intersection delay.

Intersection	
Int Delay, s/veh	0.1

Movement	EBL	EBR	NBL	NBT	SBT	SBR
Lane Configurations		¡*		f+f	+++	¡*
Traffic Vol, veh/h	0	14	0	868	1149	63
Future Vol, veh/h	0	14	0	868	1149	63
Conflicting Peds, #/hr	0	0	0	0	0	0
Sign Control	Stop	Stop	Free	Free	Free	Free
RT Channelized	-	None	-	None	-	None
Storage Length	-	0	-	-	-	175
Veh in Median Storage, #	0	-	-	0	0	-
Grade, %	0	-	-	0	0	-
Peak Hour Factor	97	97	97	97	97	97
Heavy Vehicles, %	0	0	0	0	0	0
Mvmt Flow	0	14	0	895	1185	65

Major/Minor	Minor2		Major1		Major2	
Conflicting Flow All	-	593	-	0	-	0
Stage 1	-	-	-	-	-	-
Stage 2	-	-	-	-	-	-
Critical Hdwy	-	7.1	-	-	-	-
Critical Hdwy Stg 1	-	-	-	-	-	-
Critical Hdwy Stg 2	-	-	-	-	-	-
Follow-up Hdwy	-	3.9	-	-	-	-
Pot Cap-1 Maneuver	0	388	0	-	-	-
Stage 1	0	-	0	-	-	-
Stage 2	0	-	0	-	-	-
Platoon blocked, %				-	-	-
Mov Cap-1 Maneuver	-	388	-	-	-	-
Mov Cap-2 Maneuver	-	-	-	-	-	-
Stage 1	-	-	-	-	-	-
Stage 2	-	-	-	-	-	-

Approach	EB	NB	SB
HCM Control Delay, s	14.6	0	0
HCM LOS	B		

Minor Lane/Major Mvmt	NBT	EBLn1	SBT	SBR
Capacity (veh/h)	-	388	-	-
HCM Lane V/C Ratio	-	0.037	-	-
HCM Control Delay (s)	-	14.6	-	-
HCM Lane LOS	-	B	-	-
HCM 95th %tile Q(veh)	-	0.1	-	-

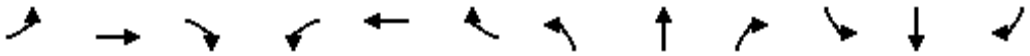

Movement	EBL	EBT	EBR	WBL	WBT	WBR	NBL	NBT	NBR	SBL	SBT	SBR
Lane Configurations	*i	T*		*i	T*		*i	++T*		*i	f+'b	
Traffic Volume (veh/h)	76	0	33	11	0	10	100	782	41	17	1138	9
Future Volume (veh/h)	76	0	33	11	0	10	100	782	41	17	1138	9
Initial Q (Qb), veh	0	0	0	0	0	0	0	0	0	0	0	0
Ped-Bike Adj(A_pbT)	1.00		1.00	1.00		1.00	1.00		1.00	1.00		0.98
Parking Bus, Adj	1.00	1.00	1.00	1.00	1.00	1.00	1.00	1.00	1.00	1.00	1.00	1.00
Work Zone On Approach		No			No			No			No	
Adj Sat Flow, veh/h/ln	1900	1900	1900	1900	1900	1900	1900	1900	1900	1900	1900	1900
Adj Flow Rate, veh/h	81	0	35	12	0	11	106	832	44	18	1211	10
Peak Hour Factor	0.94	0.94	0.94	0.94	0.94	0.94	0.94	0.94	0.94	0.94	0.94	0.94
Percent Heavy Veh, %	0	0	0	0	0	0	0	0	0	0	0	0
Cap, veh/h	183	0	140	161	0	140	136	3731	197	35	3630	30
Arrive On Green	0.09	0.00	0.09	0.09	0.00	0.09	0.07	0.74	0.74	0.02	0.68	0.68
Sat Flow, veh/h	1426	0	1610	1395	0	1610	1810	5044	266	1810	5305	44
Grp Volume(v), veh/h	81	0	35	12	0	11	106	570	306	18	789	432
Grp Sat Flow(s),veh/h/ln	1426	0	1610	1395	0	1610	1810	1729	1852	1810	1729	1891
Q Serve(g_s), s	5.8	0.0	2.1	0.9	0.0	0.7	6.0	5.4	5.4	1.0	9.8	9.8
Cycle Q Clear(g_c), s	6.5	0.0	2.1	3.0	0.0	0.7	6.0	5.4	5.4	1.0	9.8	9.8
Prop In Lane	1.00		1.00	1.00		1.00	1.00		0.14	1.00		0.02
Lane Grp Cap(c), veh/h	183	0	140	161	0	140	136	2558	1370	35	2366	1294
V/C Ratio(X)	0.44	0.00	0.25	0.07	0.00	0.08	0.78	0.22	0.22	0.51	0.33	0.33
Avail Cap(c_a), veh/h	478	0	472	450	0	472	224	2558	1370	224	2366	1294
HCM Platoon Ratio	1.00	1.00	1.00	1.00	1.00	1.00	1.00	1.00	1.00	1.00	1.00	1.00
Upstream Filter(I)	1.00	0.00	1.00	1.00	0.00	1.00	1.00	1.00	1.00	1.00	1.00	1.00
Uniform Delay (d), s/veh	47.1	0.0	44.8	46.2	0.0	44.1	47.7	4.3	4.3	51.0	6.8	6.8
Incr Delay (d2), s/veh	3.6	0.0	2.0	0.4	0.0	0.5	18.5	0.2	0.4	22.5	0.4	0.7
Initial Q Delay(d3),s/veh	0.0	0.0	0.0	0.0	0.0	0.0	0.0	0.0	0.0	0.0	0.0	0.0
%ile BackOfQ(50%),veh/ln	2.3	0.0	0.9	0.3	0.0	0.3	3.3	1.4	1.5	0.7	2.9	3.3
Unsig. Movement Delay, s/veh												
LnGrp Delay(d),s/veh	50.6	0.0	46.8	46.6	0.0	44.6	66.3	4.5	4.6	73.5	7.2	7.5
LnGrp LOS	D	A	D	D	A	D	E	A	A	E	A	A
Approach Vol, veh/h		116			23			982			1239	
Approach Delay, s/veh		49.5			45.6			11.2			8.2	
Approach LOS		D			D			B			A	

Timer - Assigned Phs	1	2		4	5	6		8				
Phs Duration (G+Y+Rc), s	6.0	83.7		15.3	11.9	77.8		15.3				
Change Period (Y+Rc), s	4.0	* 6		6.2	4.0	* 6		6.2				
Max Green Setting (Gmax), s	13.0	* 45		30.8	13.0	* 45		30.8				
Max Q Clear Time (g_c+I1), s	3.0	7.4		8.5	8.0	11.8		5.0				
Green Ext Time (p_c), s	0.0	11.9		0.8	0.2	16.9		0.1				

Intersection Summary		
HCM 6th Ctrl Delay		11.9
HCM 6th LOS		B

Notes

* HCM 6th computational engine requires equal clearance times for the phases crossing the barrier.



Movement	EBT	EBR	WBL	WBT	NBL	NBR
Lane Configurations	++1*					
Traffic Volume (veh/h)	1530	144	62	826	112	57
Future Volume (veh/h)	1530	144	62	826	112	57
Initial Q (Qb), veh	0	0	0	0	0	0
Ped-Bike Adj(A_pbT)		1.00	1.00		1.00	1.00
Parking Bus, Adj	1.00	1.00	1.00	1.00	1.00	1.00
Work Zone On Approach	No			No	No	
Adj Sat Flow, veh/h/ln	1900	1900	1900	1900	1900	1900
Adj Flow Rate, veh/h	1594	150	65	860	117	59
Peak Hour Factor	0.96	0.96	0.96	0.96	0.96	0.96
Percent Heavy Veh, %	0	0	0	0	0	0
Cap, veh/h	1535	144	99	2265	1563	805
Arrive On Green	0.32	0.32	0.05	0.44	0.45	0.45
Sat Flow, veh/h	4994	453	1810	5358	3510	1610
Grp Volume(v), veh/h	1142	602	65	860	117	59
Grp Sat Flow(s),veh/h/ln	1729	1818	1810	1729	1755	1610
Q Serve(g_s), s	35.0	35.0	3.9	12.3	2.1	2.1
Cycle Q Clear(g_c), s	35.0	35.0	3.9	12.3	2.1	2.1
Prop In Lane		0.25	1.00		1.00	1.00
Lane Grp Cap(c), veh/h	1100	579	99	2265	1563	805
V/C Ratio(X)	1.04	1.04	0.65	0.38	0.07	0.07
Avail Cap(c_a), veh/h	1100	579	329	2924	1563	805
HCM Platoon Ratio	1.00	1.00	1.00	1.00	1.00	1.00
Upstream Filter(I)	1.00	1.00	0.85	0.85	1.00	1.00
Uniform Delay (d), s/veh	37.5	37.5	51.0	20.9	17.5	14.3
Incr Delay (d2), s/veh	37.6	48.2	4.5	0.1	0.1	0.2
Initial Q Delay(d3),s/veh	0.0	0.0	0.0	0.0	0.0	0.0
%ile BackOfQ(50%),veh/ln	19.5	22.2	1.8	4.6	0.9	0.7
Unsig. Movement Delay, s/veh						
LnGrp Delay(d),s/veh	75.1	85.7	55.5	21.0	17.6	14.4
LnGrp LOS	F	F	E	C	B	B
Approach Vol, veh/h	1744			925	176	
Approach Delay, s/veh	78.7			23.4	16.6	
Approach LOS	E			C	B	

Timer - Assigned Phs	2	3	4	8
Phs Duration (G+Y+Rc), s	55.0	13.0	42.0	55.0
Change Period (Y+Rc), s	6.0	7.0	7.0	7.0
Max Green Setting (Gmax), s	35.0	20.0	35.0	62.0
Max Q Clear Time (g_c+I1), s	4.1	5.9	37.0	14.3
Green Ext Time (p_c), s	0.4	0.1	0.0	6.2

Intersection Summary	
HCM 6th Ctrl Delay	56.9
HCM 6th LOS	E



Movement	EBL	EBT	EBR	WBL	WBT	WBR	NBL	NBT	NBR	SBL	SBT	SBR
Lane Configurations				*i	+++	i*i*	*i*i	++T*				
Traffic Volume (veh/h)	790	775	23	84	474	587	12	81	51	477	159	401
Future Volume (veh/h)	790	775	23	84	474	587	12	81	51	477	159	401
Initial Q (Qb), veh	0	0	0	0	0	0	0	0	0	0	0	0
Ped-Bike Adj(A_pbT)	1.00		1.00	1.00		1.00	1.00		1.00	1.00		1.00
Parking Bus, Adj	1.00	1.00	1.00	1.00	1.00	1.00	1.00	1.00	1.00	1.00	1.00	1.00
Work Zone On Approach		No			No			No			No	
Adj Sat Flow, veh/h/ln	1900	1900	1900	1900	1900	1900	1900	1900	1900	1900	1900	1900
Adj Flow Rate, veh/h	840	824	24	89	504	624	13	86	54	507	169	427
Peak Hour Factor	0.94	0.94	0.94	0.94	0.94	0.94	0.94	0.94	0.94	0.94	0.94	0.94
Percent Heavy Veh, %	0	0	0	0	0	0	0	0	0	0	0	0
Cap, veh/h	453	1611	47	114	1271	695	97	1060	493	464	1484	662
Arrive On Green	0.13	0.31	0.31	0.06	0.25	0.25	0.03	0.31	0.31	0.13	0.41	0.41
Sat Flow, veh/h	3510	5180	151	1810	5187	2834	3510	3458	1610	3510	3610	1610
Grp Volume(v), veh/h	840	550	298	89	504	624	13	86	54	507	169	427
Grp Sat Flow(s),veh/h/ln	1755	1729	1873	1810	1729	1417	1755	1729	1610	1755	1805	1610
Q Serve(g_s), s	20.0	20.2	20.2	7.5	12.6	33.0	0.6	2.7	3.7	20.5	4.5	32.9
Cycle Q Clear(g_c), s	20.0	20.2	20.2	7.5	12.6	33.0	0.6	2.7	3.7	20.5	4.5	32.9
Prop In Lane	1.00		0.08	1.00		1.00	1.00		1.00	1.00		1.00
Lane Grp Cap(c), veh/h	453	1076	583	114	1271	695	97	1060	493	464	1484	662
V/C Ratio(X)	1.85	0.51	0.51	0.78	0.40	0.90	0.13	0.08	0.11	1.09	0.11	0.65
Avail Cap(c_a), veh/h	453	1076	583	233	1439	786	464	1060	493	464	1484	662
HCM Platoon Ratio	1.00	1.00	1.00	1.00	1.00	1.00	1.00	1.00	1.00	1.00	1.00	1.00
Upstream Filter(I)	0.52	0.52	0.52	0.93	0.93	0.93	1.00	1.00	1.00	1.00	1.00	1.00
Uniform Delay (d), s/veh	67.5	43.7	43.8	71.5	48.9	56.6	73.5	38.2	38.6	67.3	28.2	36.6
Incr Delay (d2), s/veh	388.9	0.2	0.3	4.0	0.1	11.2	0.2	0.1	0.4	69.0	0.2	4.8
Initial Q Delay(d3),s/veh	0.0	0.0	0.0	0.0	0.0	0.0	0.0	0.0	0.0	0.0	0.0	0.0
%ile BackOfQ(50%),veh/ln	38.2	8.5	9.2	3.5	5.4	12.6	0.3	1.2	1.6	13.4	1.9	13.4
Unsig. Movement Delay, s/veh												
LnGrp Delay(d),s/veh	456.4	43.9	44.1	75.5	49.1	67.8	73.8	38.4	39.0	136.3	28.4	41.4
LnGrp LOS	F	D	D	E	D	E	E	D	D	F	C	D
Approach Vol, veh/h		1688			1217			153			1103	
Approach Delay, s/veh		249.2			60.6			41.6			83.0	
Approach LOS		F			E			D			F	

Timer - Assigned Phs	1	2	3	4	5	6	7	8
Phs Duration (G+Y+Rc), s	11.8	71.2	27.0	45.0	28.0	55.0	16.8	55.2
Change Period (Y+Rc), s	7.5	7.5	7.0	7.0	7.5	7.5	7.0	7.0
Max Green Setting (Gmax), s	20.5	42.5	20.0	43.0	20.5	42.5	20.0	43.0
Max Q Clear Time (g_c+I1), s	12.6	34.9	22.0	35.0	22.5	5.7	9.5	22.2
Green Ext Time (p_c), s	0.0	1.2	0.0	3.0	0.0	0.7	0.1	3.9

Intersection Summary		
HCM 6th Ctrl Delay		142.4
HCM 6th LOS		F



Movement	EBT	EBR	WBL	WBT	NBL	NBR
Lane Configurations	+++	j*		+++	↰	↱
Traffic Volume (veh/h)	1294	9	136	1018	127	222
Future Volume (veh/h)	1294	9	136	1018	127	222
Initial Q (Qb), veh	0	0	0	0	0	0
Ped-Bike Adj(A_pbT)		1.00	1.00		1.00	1.00
Parking Bus, Adj	1.00	1.00	1.00	1.00	1.00	1.00
Work Zone On Approach	No			No	No	
Adj Sat Flow, veh/h/ln	1900	1900	1900	1900	1900	1900
Adj Flow Rate, veh/h	1438	0	151	1131	141	247
Peak Hour Factor	0.90	0.90	0.90	0.90	0.90	0.90
Percent Heavy Veh, %	0	0	0	0	0	0
Cap, veh/h	1837		188	2780	578	515
Arrive On Green	0.35	0.00	0.03	0.18	0.32	0.32
Sat Flow, veh/h	5358	1610	1810	5358	1810	1610
Grp Volume(v), veh/h	1438	0	151	1131	141	247
Grp Sat Flow(s),veh/h/ln	1729	1610	1810	1729	1810	1610
Q Serve(g_s), s	22.3	0.0	7.5	17.4	5.2	11.1
Cycle Q Clear(g_c), s	22.3	0.0	7.5	17.4	5.2	11.1
Prop In Lane		1.00	1.00		1.00	1.00
Lane Grp Cap(c), veh/h	1837		188	2780	578	515
V/C Ratio(X)	0.78		0.80	0.41	0.24	0.48
Avail Cap(c_a), veh/h	2017		302	3285	578	515
HCM Platoon Ratio	1.00	1.00	0.33	0.33	1.00	1.00
Upstream Filter(I)	0.55	0.00	0.91	0.91	1.00	1.00
Uniform Delay (d), s/veh	26.0	0.0	42.5	24.4	22.6	24.6
Incr Delay (d2), s/veh	1.1	0.0	5.4	0.1	1.0	3.2
Initial Q Delay(d3),s/veh	0.0	0.0	0.0	0.0	0.0	0.0
%ile BackOfQ(50%),veh/ln	9.0	0.0	3.6	7.9	2.2	4.3
Unsig. Movement Delay, s/veh						
LnGrp Delay(d),s/veh	27.1	0.0	47.9	24.5	23.6	27.8
LnGrp LOS	C		D	C	C	C
Approach Vol, veh/h	1438			1282	388	
Approach Delay, s/veh	27.1			27.2	26.3	
Approach LOS	C			C	C	

Timer - Assigned Phs	2	3	4		8
Phs Duration (G+Y+Rc), s	34.8	16.4	38.9		55.2
Change Period (Y+Rc), s	6.0	7.0	7.0		7.0
Max Green Setting (Gmax), s	20.0	15.0	35.0		57.0
Max Q Clear Time (g_c+I1), s	13.1	9.5	24.3		19.4
Green Ext Time (p_c), s	0.5	0.1	7.6		10.6

Intersection Summary	
HCM 6th Ctrl Delay	27.0
HCM 6th LOS	C

Notes

Unsignalized Delay for [EBR] is excluded from calculations of the approach delay and intersection delay.



Movement	EBT	EBR	WBL	WBT	NBL	NBR
Lane Configurations	fff	↱	*1	W	W	↱
Traffic Volume (veh/h)	1488	28	59	1086	67	78
Future Volume (veh/h)	1488	28	59	1086	67	78
Initial Q (Qb), veh	0	0	0	0	0	0
Ped-Bike Adj(A_pbT)		1.00	1.00		1.00	1.00
Parking Bus, Adj	1.00	1.00	1.00	1.00	1.00	1.00
Work Zone On Approach	No			No	No	
Adj Sat Flow, veh/h/ln	1900	1900	1900	1900	1900	1900
Adj Flow Rate, veh/h	1691	0	67	1234	108	55
Peak Hour Factor	0.88	0.88	0.88	0.88	0.88	0.88
Percent Heavy Veh, %	0	0	0	0	0	0
Cap, veh/h	1729		131	2507	1387	617
Arrive On Green	0.67	0.00	0.07	0.48	0.38	0.38
Sat Flow, veh/h	5358	1610	1810	5358	3619	1610
Grp Volume(v), veh/h	1691	0	67	1234	108	55
Grp Sat Flow(s),veh/h/ln	1729	1610	1810	1729	1810	1610
Q Serve(g_s), s	28.1	0.0	3.2	14.5	1.7	2.0
Cycle Q Clear(g_c), s	28.1	0.0	3.2	14.5	1.7	2.0
Prop In Lane		1.00	1.00		1.00	1.00
Lane Grp Cap(c), veh/h	1729		131	2507	1387	617
V/C Ratio(X)	0.98		0.51	0.49	0.08	0.09
Avail Cap(c_a), veh/h	1729		402	3285	1387	617
HCM Platoon Ratio	2.00	2.00	1.00	1.00	1.00	1.00
Upstream Filter(I)	0.59	0.00	1.00	1.00	1.00	1.00
Uniform Delay (d), s/veh	14.7	0.0	40.2	15.8	17.6	17.7
Incr Delay (d2), s/veh	12.0	0.0	1.2	0.2	0.1	0.3
Initial Q Delay(d3),s/veh	0.0	0.0	0.0	0.0	0.0	0.0
%ile BackOfQ(50%),veh/ln	6.3	0.0	1.4	5.0	0.7	0.7
Unsig. Movement Delay, s/veh						
LnGrp Delay(d),s/veh	26.7	0.0	41.4	15.9	17.7	18.0
LnGrp LOS	C		D	B	B	B
Approach Vol, veh/h	1691			1301	163	
Approach Delay, s/veh	26.7			17.3	17.8	
Approach LOS	C			B	B	

Timer - Assigned Phs	2	3	4		8
Phs Duration (G+Y+Rc), s	39.5	13.5	37.0		50.5
Change Period (Y+Rc), s	5.0	7.0	7.0		7.0
Max Green Setting (Gmax), s	21.0	20.0	30.0		57.0
Max Q Clear Time (g_c+I1), s	4.0	5.2	30.1		16.5
Green Ext Time (p_c), s	0.3	0.0	0.0		12.2

Intersection Summary	
HCM 6th Ctrl Delay	22.3
HCM 6th LOS	C

Notes

User approved volume balancing among the lanes for turning movement.
User approved ignoring U-Turning movement.
Unsignalized Delay for [EBR] is excluded from calculations of the approach delay and intersection delay.

Intersection	
Int Delay, s/veh	0.2

Movement	EBL	EBR	NBL	NBT	SBT	SBR
Lane Configurations		¡*		f+f	+++	¡*
Traffic Vol, veh/h	0	40	0	1930	991	28
Future Vol, veh/h	0	40	0	1930	991	28
Conflicting Peds, #/hr	0	0	0	0	0	0
Sign Control	Stop	Stop	Free	Free	Free	Free
RT Channelized	-	None	-	None	-	None
Storage Length	-	0	-	-	-	175
Veh in Median Storage, #	0	-	-	0	0	-
Grade, %	0	-	-	0	0	-
Peak Hour Factor	95	95	95	95	95	95
Heavy Vehicles, %	0	0	0	0	0	0
Mvmt Flow	0	42	0	2032	1043	29

Major/Minor	Minor2		Major1		Major2	
Conflicting Flow All	-	522	-	0	-	0
Stage 1	-	-	-	-	-	-
Stage 2	-	-	-	-	-	-
Critical Hdwy	-	7.1	-	-	-	-
Critical Hdwy Stg 1	-	-	-	-	-	-
Critical Hdwy Stg 2	-	-	-	-	-	-
Follow-up Hdwy	-	3.9	-	-	-	-
Pot Cap-1 Maneuver	0	432	0	-	-	-
Stage 1	0	-	0	-	-	-
Stage 2	0	-	0	-	-	-
Platoon blocked, %				-	-	-
Mov Cap-1 Maneuver	-	432	-	-	-	-
Mov Cap-2 Maneuver	-	-	-	-	-	-
Stage 1	-	-	-	-	-	-
Stage 2	-	-	-	-	-	-

Approach	EB	NB	SB
HCM Control Delay, s	14.2	0	0
HCM LOS	B		

Minor Lane/Major Mvmt	NBT	EBLn1	SBT	SBR
Capacity (veh/h)	-	432	-	-
HCM Lane V/C Ratio	-	0.097	-	-
HCM Control Delay (s)	-	14.2	-	-
HCM Lane LOS	-	B	-	-
HCM 95th %tile Q(veh)	-	0.3	-	-

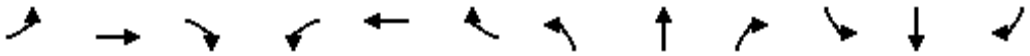

Movement	EBL	EBT	EBR	WBL	WBT	WBR	NBL	NBT	NBR	SBL	SBT	SBR
Lane Configurations	*i	T*		*i	T*		*i	++T*		*i	f+'b	
Traffic Volume (veh/h)	146	2	80	26	5	32	103	1752	8	16	1000	15
Future Volume (veh/h)	146	2	80	26	5	32	103	1752	8	16	1000	15
Initial Q (Qb), veh	0	0	0	0	0	0	0	0	0	0	0	0
Ped-Bike Adj(A_pbT)	1.00		1.00	1.00		1.00	1.00		0.98	1.00		1.00
Parking Bus, Adj	1.00	1.00	1.00	1.00	1.00	1.00	1.00	1.00	1.00	1.00	1.00	1.00
Work Zone On Approach		No			No			No			No	
Adj Sat Flow, veh/h/ln	1900	1900	1900	1900	1900	1900	1900	1900	1900	1900	1900	1900
Adj Flow Rate, veh/h	155	2	85	28	5	34	110	1864	9	17	1064	16
Peak Hour Factor	0.94	0.94	0.94	0.94	0.94	0.94	0.94	0.94	0.94	0.94	0.94	0.94
Percent Heavy Veh, %	0	0	0	0	0	0	0	0	0	0	0	0
Cap, veh/h	262	6	255	217	34	232	139	3583	17	33	3234	49
Arrive On Green	0.16	0.16	0.16	0.16	0.16	0.16	0.08	0.67	0.67	0.02	0.61	0.61
Sat Flow, veh/h	1390	37	1579	1331	211	1432	1810	5327	26	1810	5264	79
Grp Volume(v), veh/h	155	0	87	28	0	39	110	1210	663	17	699	381
Grp Sat Flow(s),veh/h/ln	1390	0	1616	1331	0	1642	1810	1729	1895	1810	1729	1885
Q Serve(g_s), s	11.9	0.0	5.2	2.1	0.0	2.2	6.6	19.4	19.4	1.0	10.7	10.7
Cycle Q Clear(g_c), s	14.1	0.0	5.2	7.3	0.0	2.2	6.6	19.4	19.4	1.0	10.7	10.7
Prop In Lane	1.00		0.98	1.00		0.87	1.00		0.01	1.00		0.04
Lane Grp Cap(c), veh/h	262	0	261	217	0	266	139	2326	1274	33	2125	1158
V/C Ratio(X)	0.59	0.00	0.33	0.13	0.00	0.15	0.79	0.52	0.52	0.51	0.33	0.33
Avail Cap(c_a), veh/h	439	0	467	387	0	475	197	2326	1274	197	2125	1158
HCM Platoon Ratio	1.00	1.00	1.00	1.00	1.00	1.00	1.00	1.00	1.00	1.00	1.00	1.00
Upstream Filter(I)	1.00	0.00	1.00	1.00	0.00	1.00	1.00	1.00	1.00	1.00	1.00	1.00
Uniform Delay (d), s/veh	45.6	0.0	40.8	44.1	0.0	39.6	49.9	9.1	9.1	53.5	10.2	10.2
Incr Delay (d2), s/veh	4.5	0.0	1.6	0.6	0.0	0.5	21.3	0.8	1.5	23.5	0.4	0.8
Initial Q Delay(d3),s/veh	0.0	0.0	0.0	0.0	0.0	0.0	0.0	0.0	0.0	0.0	0.0	0.0
%ile BackOfQ(50%),veh/ln	4.4	0.0	2.2	0.7	0.0	1.0	3.7	6.1	6.9	0.7	3.6	4.1
Unsig. Movement Delay, s/veh												
LnGrp Delay(d),s/veh	50.1	0.0	42.4	44.7	0.0	40.1	71.3	9.9	10.6	77.0	10.7	11.0
LnGrp LOS	D	A	D	D	A	D	E	A	B	E	B	B
Approach Vol, veh/h		242			67			1983			1097	
Approach Delay, s/veh		47.4			42.0			13.5			11.8	
Approach LOS		D			D			B			B	

Timer - Assigned Phs	1	2		4	5	6		8				
Phs Duration (G+Y+Rc), s	6.0	80.0		24.0	12.4	73.6		24.0				
Change Period (Y+Rc), s	4.0	* 6		6.2	4.0	* 6		6.2				
Max Green Setting (Gmax), s	12.0	* 50		31.8	12.0	* 50		31.8				
Max Q Clear Time (g_c+I1), s	3.0	21.4		16.1	8.6	12.7		9.3				
Green Ext Time (p_c), s	0.0	23.2		1.7	0.1	15.4		0.5				

Intersection Summary		
HCM 6th Ctrl Delay		16.0
HCM 6th LOS		B

Notes

* HCM 6th computational engine requires equal clearance times for the phases crossing the barrier.



Movement	EBT	EBR	WBL	WBT	NBL	NBR
Lane Configurations	++1*					
Traffic Volume (veh/h)	873	144	66	746	198	29
Future Volume (veh/h)	873	144	66	746	198	29
Initial Q (Qb), veh	0	0	0	0	0	0
Ped-Bike Adj(A_pbT)		1.00	1.00		1.00	1.00
Parking Bus, Adj	1.00	1.00	1.00	1.00	1.00	1.00
Work Zone On Approach	No			No	No	
Adj Sat Flow, veh/h/ln	1900	1900	1900	1900	1900	1900
Adj Flow Rate, veh/h	970	160	73	829	220	32
Peak Hour Factor	0.90	0.90	0.90	0.90	0.90	0.90
Percent Heavy Veh, %	0	0	0	0	0	0
Cap, veh/h	1192	196	103	2003	1740	890
Arrive On Green	0.27	0.27	0.06	0.39	0.50	0.50
Sat Flow, veh/h	4658	738	1810	5358	3510	1610
Grp Volume(v), veh/h	747	383	73	829	220	32
Grp Sat Flow(s),veh/h/ln	1729	1767	1810	1729	1755	1610
Q Serve(g_s), s	22.3	22.4	4.4	12.8	3.7	1.0
Cycle Q Clear(g_c), s	22.3	22.4	4.4	12.8	3.7	1.0
Prop In Lane		0.42	1.00		1.00	1.00
Lane Grp Cap(c), veh/h	919	470	103	2003	1740	890
V/C Ratio(X)	0.81	0.82	0.71	0.41	0.13	0.04
Avail Cap(c_a), veh/h	1100	562	329	2924	1740	890
HCM Platoon Ratio	1.00	1.00	1.00	1.00	1.00	1.00
Upstream Filter(I)	1.00	1.00	0.83	0.83	1.00	1.00
Uniform Delay (d), s/veh	37.8	37.9	51.0	24.7	14.9	11.2
Incr Delay (d2), s/veh	4.0	7.8	5.5	0.1	0.1	0.1
Initial Q Delay(d3),s/veh	0.0	0.0	0.0	0.0	0.0	0.0
%ile BackOfQ(50%),veh/ln	9.4	10.1	2.1	4.9	1.5	0.3
Unsig. Movement Delay, s/veh						
LnGrp Delay(d),s/veh	41.9	45.6	56.5	24.8	15.1	11.3
LnGrp LOS	D	D	E	C	B	B
Approach Vol, veh/h	1130			902	252	
Approach Delay, s/veh	43.1			27.3	14.6	
Approach LOS	D			C	B	

Timer - Assigned Phs		2	3	4		8
Phs Duration (G+Y+Rc), s		60.5	13.2	36.2		49.5
Change Period (Y+Rc), s		6.0	7.0	7.0		7.0
Max Green Setting (Gmax), s		35.0	20.0	35.0		62.0
Max Q Clear Time (g_c+I1), s		5.7	6.4	24.4		14.8
Green Ext Time (p_c), s		0.7	0.1	4.9		5.9

Intersection Summary	
HCM 6th Ctrl Delay	33.8
HCM 6th LOS	C



Movement	EBL	EBT	EBR	WBL	WBT	WBR	NBL	NBT	NBR	SBL	SBT	SBR
Lane Configurations					*i	+++	i*i*	*i*i	++T*			
Traffic Volume (veh/h)	530	342	30	59	360	360	33	121	28	301	226	419
Future Volume (veh/h)	530	342	30	59	360	360	33	121	28	301	226	419
Initial Q (Qb), veh	0	0	0	0	0	0	0	0	0	0	0	0
Ped-Bike Adj(A_pbT)	1.00		1.00	1.00		1.00	1.00		1.00	1.00		1.00
Parking Bus, Adj	1.00	1.00	1.00	1.00	1.00	1.00	1.00	1.00	1.00	1.00	1.00	1.00
Work Zone On Approach		No			No			No			No	
Adj Sat Flow, veh/h/ln	1900	1900	1900	1900	1900	1900	1900	1900	1900	1900	1900	1900
Adj Flow Rate, veh/h	589	380	33	66	400	400	37	134	31	334	251	466
Peak Hour Factor	0.90	0.90	0.90	0.90	0.90	0.90	0.90	0.90	0.90	0.90	0.90	0.90
Percent Heavy Veh, %	0	0	0	0	0	0	0	0	0	0	0	0
Cap, veh/h	476	1186	101	110	876	479	180	1705	372	380	1650	736
Arrive On Green	0.14	0.24	0.24	0.06	0.17	0.17	0.05	0.40	0.40	0.11	0.46	0.46
Sat Flow, veh/h	3510	4867	417	1810	5187	2834	3510	4260	930	3510	3610	1609
Grp Volume(v), veh/h	589	268	145	66	400	400	37	107	58	334	251	466
Grp Sat Flow(s),veh/h/ln	1755	1729	1825	1810	1729	1417	1755	1729	1733	1755	1805	1609
Q Serve(g_s), s	21.0	9.9	10.1	5.5	10.8	21.2	1.6	3.0	3.2	14.5	6.3	34.3
Cycle Q Clear(g_c), s	21.0	9.9	10.1	5.5	10.8	21.2	1.6	3.0	3.2	14.5	6.3	34.3
Prop In Lane	1.00		0.23	1.00		1.00	1.00		0.54	1.00		1.00
Lane Grp Cap(c), veh/h	476	842	445	110	876	479	180	1384	693	380	1650	736
V/C Ratio(X)	1.24	0.32	0.33	0.60	0.46	0.84	0.21	0.08	0.08	0.88	0.15	0.63
Avail Cap(c_a), veh/h	476	959	506	233	1406	768	464	1384	693	464	1650	736
HCM Platoon Ratio	1.00	1.00	1.00	1.00	1.00	1.00	1.00	1.00	1.00	1.00	1.00	1.00
Upstream Filter(I)	0.49	0.49	0.49	0.96	0.96	0.96	1.00	1.00	1.00	1.00	1.00	1.00
Uniform Delay (d), s/veh	67.0	48.1	48.2	71.0	58.0	62.3	70.5	28.8	28.8	68.1	24.5	32.2
Incr Delay (d2), s/veh	116.2	0.1	0.2	1.9	0.3	3.4	0.2	0.1	0.2	13.3	0.2	4.1
Initial Q Delay(d3),s/veh	0.0	0.0	0.0	0.0	0.0	0.0	0.0	0.0	0.0	0.0	0.0	0.0
%ile BackOfQ(50%),veh/ln	16.9	4.2	4.5	2.6	4.6	7.7	0.7	1.3	1.4	7.1	2.7	13.7
Unsig. Movement Delay, s/veh												
LnGrp Delay(d),s/veh	183.2	48.1	48.3	72.8	58.3	65.8	70.7	28.9	29.1	81.4	24.7	36.3
LnGrp LOS	F	D	D	E	E	E	E	C	C	F	C	D
Approach Vol, veh/h		1002			866			202			1051	
Approach Delay, s/veh		127.5			62.8			36.6			47.9	
Approach LOS		F			E			D			D	

Timer - Assigned Phs	1	2	3	4	5	6	7	8
Phs Duration (G+Y+Rc), s	15.5	78.4	28.0	33.2	24.3	69.5	16.4	44.8
Change Period (Y+Rc), s	7.5	7.5	7.0	7.0	7.5	7.5	7.0	7.0
Max Green Setting (Gmax), s	20.5	42.5	21.0	42.0	20.5	42.5	20.0	43.0
Max Q Clear Time (g_c+I1), s	13.6	36.3	23.0	23.2	16.5	5.2	7.5	12.1
Green Ext Time (p_c), s	0.0	1.4	0.0	3.0	0.3	0.8	0.0	1.8

Intersection Summary	
HCM 6th Ctrl Delay	76.9
HCM 6th LOS	E



Movement	EBT	EBR	WBL	WBT	NBL	NBR
Lane Configurations	+++	j*		+++	↰	↱
Traffic Volume (veh/h)	654	17	244	707	71	214
Future Volume (veh/h)	654	17	244	707	71	214
Initial Q (Qb), veh	0	0	0	0	0	0
Ped-Bike Adj(A_pbT)		1.00	1.00		1.00	1.00
Parking Bus, Adj	1.00	1.00	1.00	1.00	1.00	1.00
Work Zone On Approach	No			No	No	
Adj Sat Flow, veh/h/ln	1900	1900	1900	1900	1900	1900
Adj Flow Rate, veh/h	727	0	271	786	79	238
Peak Hour Factor	0.90	0.90	0.90	0.90	0.90	0.90
Percent Heavy Veh, %	0	0	0	0	0	0
Cap, veh/h	1125		299	2386	716	637
Arrive On Green	0.22	0.00	0.33	0.92	0.40	0.40
Sat Flow, veh/h	5358	1610	1810	5358	1810	1610
Grp Volume(v), veh/h	727	0	271	786	79	238
Grp Sat Flow(s),veh/h/ln	1729	1610	1810	1729	1810	1610
Q Serve(g_s), s	11.5	0.0	12.9	1.6	2.5	9.4
Cycle Q Clear(g_c), s	11.5	0.0	12.9	1.6	2.5	9.4
Prop In Lane		1.00	1.00		1.00	1.00
Lane Grp Cap(c), veh/h	1125		299	2386	716	637
V/C Ratio(X)	0.65		0.91	0.33	0.11	0.37
Avail Cap(c_a), veh/h	2017		302	3285	716	637
HCM Platoon Ratio	1.00	1.00	2.00	2.00	1.00	1.00
Upstream Filter(I)	0.80	0.00	0.93	0.93	1.00	1.00
Uniform Delay (d), s/veh	32.1	0.0	29.5	2.0	17.2	19.3
Incr Delay (d2), s/veh	0.6	0.0	27.3	0.1	0.3	1.7
Initial Q Delay(d3),s/veh	0.0	0.0	0.0	0.0	0.0	0.0
%ile BackOfQ(50%),veh/ln	4.8	0.0	6.5	0.4	1.0	3.5
Unsig. Movement Delay, s/veh						
LnGrp Delay(d),s/veh	32.7	0.0	56.7	2.1	17.5	21.0
LnGrp LOS	C		E	A	B	C
Approach Vol, veh/h	727			1057	317	
Approach Delay, s/veh	32.7			16.1	20.1	
Approach LOS	C			B	C	

Timer - Assigned Phs	2	3	4		8
Phs Duration (G+Y+Rc), s	41.6	21.9	26.5		48.4
Change Period (Y+Rc), s	6.0	7.0	7.0		7.0
Max Green Setting (Gmax), s	20.0	15.0	35.0		57.0
Max Q Clear Time (g_c+I1), s	11.4	14.9	13.5		3.6
Green Ext Time (p_c), s	0.5	0.0	6.0		6.9

Intersection Summary	
HCM 6th Ctrl Delay	22.5
HCM 6th LOS	C

Notes

Unsignalized Delay for [EBR] is excluded from calculations of the approach delay and intersection delay.



Movement	EBT	EBR	WBL	WBT	NBL	NBR
Lane Configurations	fff	↱	*1	W	W	↱
Traffic Volume (veh/h)	824	44	75	852	98	149
Future Volume (veh/h)	824	44	75	852	98	149
Initial Q (Qb), veh	0	0	0	0	0	0
Ped-Bike Adj(A_pbT)		1.00	1.00		1.00	1.00
Parking Bus, Adj	1.00	1.00	1.00	1.00	1.00	1.00
Work Zone On Approach	No			No	No	
Adj Sat Flow, veh/h/ln	1900	1900	1900	1900	1900	1900
Adj Flow Rate, veh/h	926	0	84	957	92	186
Peak Hour Factor	0.89	0.89	0.89	0.89	0.89	0.89
Percent Heavy Veh, %	0	0	0	0	0	0
Cap, veh/h	1367		141	2175	810	1441
Arrive On Green	0.09	0.00	0.08	0.42	0.45	0.45
Sat Flow, veh/h	5358	1610	1810	5358	1810	3220
Grp Volume(v), veh/h	926	0	84	957	92	186
Grp Sat Flow(s),veh/h/ln	1729	1610	1810	1729	1810	1610
Q Serve(g_s), s	15.6	0.0	4.0	11.8	2.7	3.0
Cycle Q Clear(g_c), s	15.6	0.0	4.0	11.8	2.7	3.0
Prop In Lane		1.00	1.00		1.00	1.00
Lane Grp Cap(c), veh/h	1367		141	2175	810	1441
V/C Ratio(X)	0.68		0.60	0.44	0.11	0.13
Avail Cap(c_a), veh/h	1960		362	3400	810	1441
HCM Platoon Ratio	0.33	0.33	1.00	1.00	1.00	1.00
Upstream Filter(I)	0.83	0.00	1.00	1.00	1.00	1.00
Uniform Delay (d), s/veh	37.4	0.0	40.1	18.6	14.5	14.6
Incr Delay (d2), s/veh	0.6	0.0	1.5	0.2	0.3	0.2
Initial Q Delay(d3),s/veh	0.0	0.0	0.0	0.0	0.0	0.0
%ile BackOfQ(50%),veh/ln	7.2	0.0	1.8	4.2	1.1	1.0
Unsig. Movement Delay, s/veh						
LnGrp Delay(d),s/veh	38.0	0.0	41.6	18.8	14.8	14.8
LnGrp LOS	D		D	B	B	B
Approach Vol, veh/h	926			1041	278	
Approach Delay, s/veh	38.0			20.6	14.8	
Approach LOS	D			C	B	

Timer - Assigned Phs	2	3	4		8
Phs Duration (G+Y+Rc), s	45.3	14.0	30.7		44.7
Change Period (Y+Rc), s	5.0	7.0	7.0		7.0
Max Green Setting (Gmax), s	19.0	18.0	34.0		59.0
Max Q Clear Time (g_c+I1), s	5.0	6.0	17.6		13.8
Green Ext Time (p_c), s	0.6	0.1	6.1		8.8

Intersection Summary	
HCM 6th Ctrl Delay	27.1
HCM 6th LOS	C

Notes

User approved volume balancing among the lanes for turning movement.
User approved ignoring U-Turning movement.
Unsignalized Delay for [EBR] is excluded from calculations of the approach delay and intersection delay.

Intersection	
Int Delay, s/veh	0.1

Movement	EBL	EBR	NBL	NBT	SBT	SBR
Lane Configurations		¡*		f+f	+++	¡*
Traffic Vol, veh/h	0	15	0	868	1149	63
Future Vol, veh/h	0	15	0	868	1149	63
Conflicting Peds, #/hr	0	0	0	0	0	0
Sign Control	Stop	Stop	Free	Free	Free	Free
RT Channelized	-	None	-	None	-	None
Storage Length	-	0	-	-	-	175
Veh in Median Storage, #	0	-	-	0	0	-
Grade, %	0	-	-	0	0	-
Peak Hour Factor	97	97	97	97	97	97
Heavy Vehicles, %	0	0	0	0	0	0
Mvmt Flow	0	15	0	895	1185	65

Major/Minor	Minor2		Major1		Major2	
Conflicting Flow All	-	593	-	0	-	0
Stage 1	-	-	-	-	-	-
Stage 2	-	-	-	-	-	-
Critical Hdwy	-	7.1	-	-	-	-
Critical Hdwy Stg 1	-	-	-	-	-	-
Critical Hdwy Stg 2	-	-	-	-	-	-
Follow-up Hdwy	-	3.9	-	-	-	-
Pot Cap-1 Maneuver	0	388	0	-	-	-
Stage 1	0	-	0	-	-	-
Stage 2	0	-	0	-	-	-
Platoon blocked, %				-	-	-
Mov Cap-1 Maneuver	-	388	-	-	-	-
Mov Cap-2 Maneuver	-	-	-	-	-	-
Stage 1	-	-	-	-	-	-
Stage 2	-	-	-	-	-	-

Approach	EB	NB	SB
HCM Control Delay, s	14.7	0	0
HCM LOS	B		

Minor Lane/Major Mvmt	NBT	EBLn1	SBT	SBR
Capacity (veh/h)	-	388	-	-
HCM Lane V/C Ratio	-	0.04	-	-
HCM Control Delay (s)	-	14.7	-	-
HCM Lane LOS	-	B	-	-
HCM 95th %tile Q(veh)	-	0.1	-	-

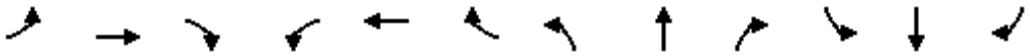

Movement	EBL	EBT	EBR	WBL	WBT	WBR	NBL	NBT	NBR	SBL	SBT	SBR
Lane Configurations	*i	T*		*i	T*		*i	++T*		*i	f+'b	
Traffic Volume (veh/h)	76	0	33	11	0	10	101	782	41	17	1139	9
Future Volume (veh/h)	76	0	33	11	0	10	101	782	41	17	1139	9
Initial Q (Qb), veh	0	0	0	0	0	0	0	0	0	0	0	0
Ped-Bike Adj(A_pbT)	1.00		1.00	1.00		1.00	1.00		1.00	1.00		0.98
Parking Bus, Adj	1.00	1.00	1.00	1.00	1.00	1.00	1.00	1.00	1.00	1.00	1.00	1.00
Work Zone On Approach		No			No			No			No	
Adj Sat Flow, veh/h/ln	1900	1900	1900	1900	1900	1900	1900	1900	1900	1900	1900	1900
Adj Flow Rate, veh/h	81	0	35	12	0	11	107	832	44	18	1212	10
Peak Hour Factor	0.94	0.94	0.94	0.94	0.94	0.94	0.94	0.94	0.94	0.94	0.94	0.94
Percent Heavy Veh, %	0	0	0	0	0	0	0	0	0	0	0	0
Cap, veh/h	183	0	140	161	0	140	137	3731	197	35	3626	30
Arrive On Green	0.09	0.00	0.09	0.09	0.00	0.09	0.08	0.74	0.74	0.02	0.68	0.68
Sat Flow, veh/h	1426	0	1610	1395	0	1610	1810	5044	266	1810	5305	44
Grp Volume(v), veh/h	81	0	35	12	0	11	107	570	306	18	790	432
Grp Sat Flow(s),veh/h/ln	1426	0	1610	1395	0	1610	1810	1729	1852	1810	1729	1891
Q Serve(g_s), s	5.8	0.0	2.1	0.9	0.0	0.7	6.1	5.4	5.4	1.0	9.8	9.8
Cycle Q Clear(g_c), s	6.5	0.0	2.1	3.0	0.0	0.7	6.1	5.4	5.4	1.0	9.8	9.8
Prop In Lane	1.00		1.00	1.00		1.00	1.00		0.14	1.00		0.02
Lane Grp Cap(c), veh/h	183	0	140	161	0	140	137	2558	1370	35	2364	1293
V/C Ratio(X)	0.44	0.00	0.25	0.07	0.00	0.08	0.78	0.22	0.22	0.51	0.33	0.33
Avail Cap(c_a), veh/h	478	0	472	450	0	472	224	2558	1370	224	2364	1293
HCM Platoon Ratio	1.00	1.00	1.00	1.00	1.00	1.00	1.00	1.00	1.00	1.00	1.00	1.00
Upstream Filter(I)	1.00	0.00	1.00	1.00	0.00	1.00	1.00	1.00	1.00	1.00	1.00	1.00
Uniform Delay (d), s/veh	47.1	0.0	44.8	46.2	0.0	44.1	47.7	4.3	4.3	51.0	6.8	6.8
Incr Delay (d2), s/veh	3.6	0.0	2.0	0.4	0.0	0.5	18.5	0.2	0.4	22.5	0.4	0.7
Initial Q Delay(d3),s/veh	0.0	0.0	0.0	0.0	0.0	0.0	0.0	0.0	0.0	0.0	0.0	0.0
%ile BackOfQ(50%),veh/ln	2.3	0.0	0.9	0.3	0.0	0.3	3.3	1.4	1.5	0.7	2.9	3.3
Unsig. Movement Delay, s/veh												
LnGrp Delay(d),s/veh	50.6	0.0	46.8	46.6	0.0	44.6	66.2	4.5	4.6	73.5	7.2	7.5
LnGrp LOS	D	A	D	D	A	D	E	A	A	E	A	A
Approach Vol, veh/h		116			23			983			1240	
Approach Delay, s/veh		49.5			45.6			11.2			8.3	
Approach LOS		D			D			B			A	

Timer - Assigned Phs	1	2		4	5	6		8				
Phs Duration (G+Y+Rc), s	6.0	83.7		15.3	11.9	77.8		15.3				
Change Period (Y+Rc), s	4.0	* 6		6.2	4.0	* 6		6.2				
Max Green Setting (Gmax), s	13.0	* 45		30.8	13.0	* 45		30.8				
Max Q Clear Time (g_c+I1), s	3.0	7.4		8.5	8.1	11.8		5.0				
Green Ext Time (p_c), s	0.0	11.9		0.8	0.2	16.9		0.1				

Intersection Summary		
HCM 6th Ctrl Delay		11.9
HCM 6th LOS		B

Notes

* HCM 6th computational engine requires equal clearance times for the phases crossing the barrier.



Movement	EBT	EBR	WBL	WBT	NBL	NBR
Lane Configurations	++1*					
Traffic Volume (veh/h)	1530	144	60	826	112	57
Future Volume (veh/h)	1530	144	60	826	112	57
Initial Q (Qb), veh	0	0	0	0	0	0
Ped-Bike Adj(A_pbT)		1.00	1.00		1.00	1.00
Parking Bus, Adj	1.00	1.00	1.00	1.00	1.00	1.00
Work Zone On Approach	No			No	No	
Adj Sat Flow, veh/h/ln	1900	1900	1900	1900	1900	1900
Adj Flow Rate, veh/h	1594	150	62	860	117	59
Peak Hour Factor	0.96	0.96	0.96	0.96	0.96	0.96
Percent Heavy Veh, %	0	0	0	0	0	0
Cap, veh/h	1535	144	98	2261	1565	805
Arrive On Green	0.32	0.32	0.05	0.44	0.45	0.45
Sat Flow, veh/h	4994	453	1810	5358	3510	1610
Grp Volume(v), veh/h	1142	602	62	860	117	59
Grp Sat Flow(s),veh/h/ln	1729	1818	1810	1729	1755	1610
Q Serve(g_s), s	35.0	35.0	3.7	12.3	2.1	2.1
Cycle Q Clear(g_c), s	35.0	35.0	3.7	12.3	2.1	2.1
Prop In Lane		0.25	1.00		1.00	1.00
Lane Grp Cap(c), veh/h	1100	579	98	2261	1565	805
V/C Ratio(X)	1.04	1.04	0.63	0.38	0.07	0.07
Avail Cap(c_a), veh/h	1100	579	329	2924	1565	805
HCM Platoon Ratio	1.00	1.00	1.00	1.00	1.00	1.00
Upstream Filter(I)	1.00	1.00	0.84	0.84	1.00	1.00
Uniform Delay (d), s/veh	37.5	37.5	51.0	21.0	17.5	14.3
Incr Delay (d2), s/veh	37.6	48.2	4.2	0.1	0.1	0.2
Initial Q Delay(d3),s/veh	0.0	0.0	0.0	0.0	0.0	0.0
%ile BackOfQ(50%),veh/ln	19.5	22.2	1.7	4.6	0.9	0.7
Unsig. Movement Delay, s/veh						
LnGrp Delay(d),s/veh	75.1	85.7	55.1	21.1	17.6	14.4
LnGrp LOS	F	F	E	C	B	B
Approach Vol, veh/h	1744			922	176	
Approach Delay, s/veh	78.7			23.4	16.5	
Approach LOS	E			C	B	

Timer - Assigned Phs	2	3	4	8
Phs Duration (G+Y+Rc), s	55.1	12.9	42.0	54.9
Change Period (Y+Rc), s	6.0	7.0	7.0	7.0
Max Green Setting (Gmax), s	35.0	20.0	35.0	62.0
Max Q Clear Time (g_c+I1), s	4.1	5.7	37.0	14.3
Green Ext Time (p_c), s	0.4	0.1	0.0	6.2

Intersection Summary	
HCM 6th Ctrl Delay	56.9
HCM 6th LOS	E



Movement	EBL	EBT	EBR	WBL	WBT	WBR	NBL	NBT	NBR	SBL	SBT	SBR
Lane Configurations				*i	+++	i*i*	*i*i	++T*				
Traffic Volume (veh/h)	790	775	23	84	474	583	12	81	51	477	158	399
Future Volume (veh/h)	790	775	23	84	474	583	12	81	51	477	158	399
Initial Q (Qb), veh	0	0	0	0	0	0	0	0	0	0	0	0
Ped-Bike Adj(A_pbT)	1.00		1.00	1.00		1.00	1.00		1.00	1.00		1.00
Parking Bus, Adj	1.00	1.00	1.00	1.00	1.00	1.00	1.00	1.00	1.00	1.00	1.00	1.00
Work Zone On Approach		No			No			No			No	
Adj Sat Flow, veh/h/ln	1900	1900	1900	1900	1900	1900	1900	1900	1900	1900	1900	1900
Adj Flow Rate, veh/h	840	824	24	89	504	620	13	86	54	507	168	424
Peak Hour Factor	0.94	0.94	0.94	0.94	0.94	0.94	0.94	0.94	0.94	0.94	0.94	0.94
Percent Heavy Veh, %	0	0	0	0	0	0	0	0	0	0	0	0
Cap, veh/h	476	1632	47	114	1259	688	97	1046	487	464	1469	655
Arrive On Green	0.14	0.32	0.32	0.06	0.24	0.24	0.03	0.30	0.30	0.13	0.41	0.41
Sat Flow, veh/h	3510	5180	151	1810	5187	2834	3510	3458	1610	3510	3610	1610
Grp Volume(v), veh/h	840	550	298	89	504	620	13	86	54	507	168	424
Grp Sat Flow(s),veh/h/ln	1755	1729	1873	1810	1729	1417	1755	1729	1610	1755	1805	1610
Q Serve(g_s), s	21.0	20.1	20.1	7.5	12.6	32.9	0.6	2.8	3.8	20.5	4.5	32.9
Cycle Q Clear(g_c), s	21.0	20.1	20.1	7.5	12.6	32.9	0.6	2.8	3.8	20.5	4.5	32.9
Prop In Lane	1.00		0.08	1.00		1.00	1.00		1.00	1.00		1.00
Lane Grp Cap(c), veh/h	476	1090	590	114	1259	688	97	1046	487	464	1469	655
V/C Ratio(X)	1.77	0.50	0.51	0.78	0.40	0.90	0.13	0.08	0.11	1.09	0.11	0.65
Avail Cap(c_a), veh/h	476	1090	590	233	1406	768	464	1046	487	464	1469	655
HCM Platoon Ratio	1.00	1.00	1.00	1.00	1.00	1.00	1.00	1.00	1.00	1.00	1.00	1.00
Upstream Filter(I)	0.52	0.52	0.52	0.93	0.93	0.93	1.00	1.00	1.00	1.00	1.00	1.00
Uniform Delay (d), s/veh	67.0	43.2	43.2	71.5	49.2	56.9	73.5	38.7	39.0	67.3	28.6	37.0
Incr Delay (d2), s/veh	349.2	0.1	0.3	4.0	0.1	11.9	0.2	0.2	0.5	69.0	0.2	4.9
Initial Q Delay(d3),s/veh	0.0	0.0	0.0	0.0	0.0	0.0	0.0	0.0	0.0	0.0	0.0	0.0
%ile BackOfQ(50%),veh/ln	32.3	8.4	9.2	3.5	5.4	12.6	0.3	1.2	1.6	13.4	2.0	13.4
Unsig. Movement Delay, s/veh												
LnGrp Delay(d),s/veh	416.2	43.4	43.5	75.5	49.4	68.8	73.8	38.8	39.5	136.3	28.7	41.9
LnGrp LOS	F	D	D	E	D	E	E	D	D	F	C	D
Approach Vol, veh/h		1688			1213			153			1099	
Approach Delay, s/veh		229.0			61.2			42.0			83.4	
Approach LOS		F			E			D			F	

Timer - Assigned Phs	1	2	3	4	5	6	7	8
Phs Duration (G+Y+Rc), s	11.8	70.6	28.0	44.6	28.0	54.4	16.8	55.8
Change Period (Y+Rc), s	7.5	7.5	7.0	7.0	7.5	7.5	7.0	7.0
Max Green Setting (Gmax), s	20.5	42.5	21.0	42.0	20.5	42.5	20.0	43.0
Max Q Clear Time (g_c+I1), s	2.6	34.9	23.0	34.9	22.5	5.8	9.5	22.1
Green Ext Time (p_c), s	0.0	1.2	0.0	2.8	0.0	0.7	0.1	3.9

Intersection Summary		
HCM 6th Ctrl Delay		134.6
HCM 6th LOS		F



Movement	EBT	EBR	WBL	WBT	NBL	NBR
Lane Configurations	+++	j*		+++	↰	↱
Traffic Volume (veh/h)	1294	9	134	1018	123	219
Future Volume (veh/h)	1294	9	134	1018	123	219
Initial Q (Qb), veh	0	0	0	0	0	0
Ped-Bike Adj(A_pbT)		1.00	1.00		1.00	1.00
Parking Bus, Adj	1.00	1.00	1.00	1.00	1.00	1.00
Work Zone On Approach	No			No	No	
Adj Sat Flow, veh/h/ln	1900	1900	1900	1900	1900	1900
Adj Flow Rate, veh/h	1438	0	149	1131	137	243
Peak Hour Factor	0.90	0.90	0.90	0.90	0.90	0.90
Percent Heavy Veh, %	0	0	0	0	0	0
Cap, veh/h	1837		186	2774	581	517
Arrive On Green	0.35	0.00	0.03	0.18	0.32	0.32
Sat Flow, veh/h	5358	1610	1810	5358	1810	1610
Grp Volume(v), veh/h	1438	0	149	1131	137	243
Grp Sat Flow(s),veh/h/ln	1729	1610	1810	1729	1810	1610
Q Serve(g_s), s	22.3	0.0	7.4	17.4	5.0	10.9
Cycle Q Clear(g_c), s	22.3	0.0	7.4	17.4	5.0	10.9
Prop In Lane		1.00	1.00		1.00	1.00
Lane Grp Cap(c), veh/h	1837		186	2774	581	517
V/C Ratio(X)	0.78		0.80	0.41	0.24	0.47
Avail Cap(c_a), veh/h	2017		302	3285	581	517
HCM Platoon Ratio	1.00	1.00	0.33	0.33	1.00	1.00
Upstream Filter(I)	0.56	0.00	0.91	0.91	1.00	1.00
Uniform Delay (d), s/veh	26.0	0.0	42.6	24.4	22.5	24.4
Incr Delay (d2), s/veh	1.1	0.0	5.4	0.1	1.0	3.1
Initial Q Delay(d3),s/veh	0.0	0.0	0.0	0.0	0.0	0.0
%ile BackOfQ(50%),veh/ln	9.0	0.0	3.6	7.9	2.1	4.2
Unsig. Movement Delay, s/veh						
LnGrp Delay(d),s/veh	27.1	0.0	47.9	24.5	23.4	27.5
LnGrp LOS	C		D	C	C	C
Approach Vol, veh/h	1438			1280	380	
Approach Delay, s/veh	27.1			27.2	26.0	
Approach LOS	C			C	C	

Timer - Assigned Phs	2	3	4		8
Phs Duration (G+Y+Rc), s	34.9	16.2	38.9		55.1
Change Period (Y+Rc), s	6.0	7.0	7.0		7.0
Max Green Setting (Gmax), s	20.0	15.0	35.0		57.0
Max Q Clear Time (g_c+I1), s	12.9	9.4	24.3		19.4
Green Ext Time (p_c), s	0.5	0.1	7.6		10.6

Intersection Summary	
HCM 6th Ctrl Delay	27.0
HCM 6th LOS	C

Notes

Unsignalized Delay for [EBR] is excluded from calculations of the approach delay and intersection delay.



Movement	EBT	EBR	WBL	WBT	NBL	NBR
Lane Configurations	fff	↱	*1	W	W	↱
Traffic Volume (veh/h)	1485	28	58	1084	67	77
Future Volume (veh/h)	1485	28	58	1084	67	77
Initial Q (Qb), veh	0	0	0	0	0	0
Ped-Bike Adj(A_pbT)		1.00	1.00		1.00	1.00
Parking Bus, Adj	1.00	1.00	1.00	1.00	1.00	1.00
Work Zone On Approach	No			No	No	
Adj Sat Flow, veh/h/ln	1900	1900	1900	1900	1900	1900
Adj Flow Rate, veh/h	1688	0	66	1232	107	55
Peak Hour Factor	0.88	0.88	0.88	0.88	0.88	0.88
Percent Heavy Veh, %	0	0	0	0	0	0
Cap, veh/h	1729		130	2505	1389	618
Arrive On Green	0.67	0.00	0.07	0.48	0.38	0.38
Sat Flow, veh/h	5358	1610	1810	5358	3619	1610
Grp Volume(v), veh/h	1688	0	66	1232	107	55
Grp Sat Flow(s),veh/h/ln	1729	1610	1810	1729	1810	1610
Q Serve(g_s), s	28.0	0.0	3.2	14.5	1.7	2.0
Cycle Q Clear(g_c), s	28.0	0.0	3.2	14.5	1.7	2.0
Prop In Lane		1.00	1.00		1.00	1.00
Lane Grp Cap(c), veh/h	1729		130	2505	1389	618
V/C Ratio(X)	0.98		0.51	0.49	0.08	0.09
Avail Cap(c_a), veh/h	1729		402	3285	1389	618
HCM Platoon Ratio	2.00	2.00	1.00	1.00	1.00	1.00
Upstream Filter(I)	0.59	0.00	1.00	1.00	1.00	1.00
Uniform Delay (d), s/veh	14.7	0.0	40.2	15.8	17.6	17.7
Incr Delay (d2), s/veh	11.7	0.0	1.1	0.2	0.1	0.3
Initial Q Delay(d3),s/veh	0.0	0.0	0.0	0.0	0.0	0.0
%ile BackOfQ(50%),veh/ln	6.2	0.0	1.4	5.0	0.7	0.7
Unsig. Movement Delay, s/veh						
LnGrp Delay(d),s/veh	26.3	0.0	41.4	16.0	17.7	18.0
LnGrp LOS	C		D	B	B	B
Approach Vol, veh/h	1688			1298	162	
Approach Delay, s/veh	26.3			17.3	17.8	
Approach LOS	C			B	B	

Timer - Assigned Phs	2	3	4	8
Phs Duration (G+Y+Rc), s	39.5	13.5	37.0	50.5
Change Period (Y+Rc), s	5.0	7.0	7.0	7.0
Max Green Setting (Gmax), s	21.0	20.0	30.0	57.0
Max Q Clear Time (g_c+I1), s	4.0	5.2	30.0	16.5
Green Ext Time (p_c), s	0.3	0.0	0.0	12.2

Intersection Summary	
HCM 6th Ctrl Delay	22.2
HCM 6th LOS	C

Notes

User approved volume balancing among the lanes for turning movement.
User approved ignoring U-Turning movement.
Unsignalized Delay for [EBR] is excluded from calculations of the approach delay and intersection delay.

Intersection	
Int Delay, s/veh	0.2

Movement	EBL	EBR	NBL	NBT	SBT	SBR
Lane Configurations		¡*		f+f	+++	¡*
Traffic Vol, veh/h	0	41	0	1930	991	28
Future Vol, veh/h	0	41	0	1930	991	28
Conflicting Peds, #/hr	0	0	0	0	0	0
Sign Control	Stop	Stop	Free	Free	Free	Free
RT Channelized	-	None	-	None	-	None
Storage Length	-	0	-	-	-	175
Veh in Median Storage, #	0	-	-	0	0	-
Grade, %	0	-	-	0	0	-
Peak Hour Factor	95	95	95	95	95	95
Heavy Vehicles, %	0	0	0	0	0	0
Mvmt Flow	0	43	0	2032	1043	29

Major/Minor	Minor2		Major1		Major2	
Conflicting Flow All	-	522	-	0	-	0
Stage 1	-	-	-	-	-	-
Stage 2	-	-	-	-	-	-
Critical Hdwy	-	7.1	-	-	-	-
Critical Hdwy Stg 1	-	-	-	-	-	-
Critical Hdwy Stg 2	-	-	-	-	-	-
Follow-up Hdwy	-	3.9	-	-	-	-
Pot Cap-1 Maneuver	0	432	0	-	-	-
Stage 1	0	-	0	-	-	-
Stage 2	0	-	0	-	-	-
Platoon blocked, %				-	-	-
Mov Cap-1 Maneuver	-	432	-	-	-	-
Mov Cap-2 Maneuver	-	-	-	-	-	-
Stage 1	-	-	-	-	-	-
Stage 2	-	-	-	-	-	-

Approach	EB	NB	SB
HCM Control Delay, s	14.3	0	0
HCM LOS	B		

Minor Lane/Major Mvmt	NBT	EBLn1	SBT	SBR
Capacity (veh/h)	-	432	-	-
HCM Lane V/C Ratio	-	0.1	-	-
HCM Control Delay (s)	-	14.3	-	-
HCM Lane LOS	-	B	-	-
HCM 95th %tile Q(veh)	-	0.3	-	-

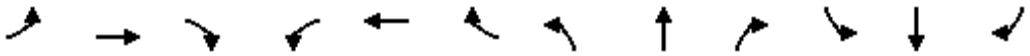

Movement	EBL	EBT	EBR	WBL	WBT	WBR	NBL	NBT	NBR	SBL	SBT	SBR
Lane Configurations	*i	T*		*i	T*		*i	++T*		*i	f+'b	
Traffic Volume (veh/h)	146	2	80	26	5	32	104	1752	8	16	1001	15
Future Volume (veh/h)	146	2	80	26	5	32	104	1752	8	16	1001	15
Initial Q (Qb), veh	0	0	0	0	0	0	0	0	0	0	0	0
Ped-Bike Adj(A_pbT)	1.00		1.00	1.00		1.00	1.00		0.98	1.00		1.00
Parking Bus, Adj	1.00	1.00	1.00	1.00	1.00	1.00	1.00	1.00	1.00	1.00	1.00	1.00
Work Zone On Approach		No			No			No			No	
Adj Sat Flow, veh/h/ln	1900	1900	1900	1900	1900	1900	1900	1900	1900	1900	1900	1900
Adj Flow Rate, veh/h	155	2	85	28	5	34	111	1864	9	17	1065	16
Peak Hour Factor	0.94	0.94	0.94	0.94	0.94	0.94	0.94	0.94	0.94	0.94	0.94	0.94
Percent Heavy Veh, %	0	0	0	0	0	0	0	0	0	0	0	0
Cap, veh/h	262	6	255	217	34	232	140	3583	17	33	3231	49
Arrive On Green	0.16	0.16	0.16	0.16	0.16	0.16	0.08	0.67	0.67	0.02	0.61	0.61
Sat Flow, veh/h	1390	37	1579	1331	211	1432	1810	5327	26	1810	5264	79
Grp Volume(v), veh/h	155	0	87	28	0	39	111	1210	663	17	699	382
Grp Sat Flow(s),veh/h/ln	1390	0	1616	1331	0	1642	1810	1729	1895	1810	1729	1885
Q Serve(g_s), s	11.9	0.0	5.2	2.1	0.0	2.2	6.6	19.4	19.4	1.0	10.8	10.8
Cycle Q Clear(g_c), s	14.1	0.0	5.2	7.3	0.0	2.2	6.6	19.4	19.4	1.0	10.8	10.8
Prop In Lane	1.00		0.98	1.00		0.87	1.00		0.01	1.00		0.04
Lane Grp Cap(c), veh/h	262	0	261	217	0	266	140	2326	1274	33	2123	1157
V/C Ratio(X)	0.59	0.00	0.33	0.13	0.00	0.15	0.80	0.52	0.52	0.51	0.33	0.33
Avail Cap(c_a), veh/h	439	0	467	387	0	475	197	2326	1274	197	2123	1157
HCM Platoon Ratio	1.00	1.00	1.00	1.00	1.00	1.00	1.00	1.00	1.00	1.00	1.00	1.00
Upstream Filter(I)	1.00	0.00	1.00	1.00	0.00	1.00	1.00	1.00	1.00	1.00	1.00	1.00
Uniform Delay (d), s/veh	45.6	0.0	40.8	44.1	0.0	39.6	49.9	9.1	9.1	53.5	10.3	10.3
Incr Delay (d2), s/veh	4.5	0.0	1.6	0.6	0.0	0.5	21.5	0.8	1.5	23.5	0.4	0.8
Initial Q Delay(d3),s/veh	0.0	0.0	0.0	0.0	0.0	0.0	0.0	0.0	0.0	0.0	0.0	0.0
%ile BackOfQ(50%),veh/ln	4.4	0.0	2.2	0.7	0.0	1.0	3.7	6.1	6.9	0.7	3.6	4.1
Unsig. Movement Delay, s/veh												
LnGrp Delay(d),s/veh	50.1	0.0	42.4	44.7	0.0	40.1	71.4	9.9	10.6	77.0	10.7	11.0
LnGrp LOS	D	A	D	D	A	D	E	A	B	E	B	B
Approach Vol, veh/h		242			67			1984			1098	
Approach Delay, s/veh		47.4			42.0			13.6			11.8	
Approach LOS		D			D			B			B	

Timer - Assigned Phs	1	2		4	5	6		8				
Phs Duration (G+Y+Rc), s	6.0	80.0		24.0	12.5	73.5		24.0				
Change Period (Y+Rc), s	4.0	* 6		6.2	4.0	* 6		6.2				
Max Green Setting (Gmax), s	12.0	* 50		31.8	12.0	* 50		31.8				
Max Q Clear Time (g_c+I1), s	3.0	21.4		16.1	8.6	12.8		9.3				
Green Ext Time (p_c), s	0.0	23.2		1.7	0.1	15.4		0.5				

Intersection Summary			
HCM 6th Ctrl Delay		16.0	
HCM 6th LOS		B	

Notes

* HCM 6th computational engine requires equal clearance times for the phases crossing the barrier.



Movement	EBT	EBR	WBL	WBT	NBL	NBR
Lane Configurations	++1*					
Traffic Volume (veh/h)	1099	308	75	815	573	69
Future Volume (veh/h)	1099	308	75	815	573	69
Initial Q (Qb), veh	0	0	0	0	0	0
Ped-Bike Adj(A_pbT)		1.00	1.00		1.00	1.00
Parking Bus, Adj	1.00	1.00	1.00	1.00	1.00	1.00
Work Zone On Approach	No			No	No	
Adj Sat Flow, veh/h/ln	1900	1900	1900	1900	1900	1900
Adj Flow Rate, veh/h	1157	324	79	858	603	73
Peak Hour Factor	0.95	0.95	0.95	0.95	0.95	0.95
Percent Heavy Veh, %	0	0	0	0	0	0
Cap, veh/h	1208	338	105	2187	1616	834
Arrive On Green	0.30	0.30	0.06	0.42	0.46	0.46
Sat Flow, veh/h	4198	1128	1810	5358	3510	1610
Grp Volume(v), veh/h	993	488	79	858	603	73
Grp Sat Flow(s),veh/h/ln	1729	1697	1810	1729	1755	1610
Q Serve(g_s), s	31.0	31.0	4.7	12.6	12.3	2.5
Cycle Q Clear(g_c), s	31.0	31.0	4.7	12.6	12.3	2.5
Prop In Lane		0.66	1.00		1.00	1.00
Lane Grp Cap(c), veh/h	1037	509	105	2187	1616	834
V/C Ratio(X)	0.96	0.96	0.75	0.39	0.37	0.09
Avail Cap(c_a), veh/h	1037	509	362	2924	1616	834
HCM Platoon Ratio	1.00	1.00	1.00	1.00	1.00	1.00
Upstream Filter(I)	1.00	1.00	0.83	0.83	1.00	1.00
Uniform Delay (d), s/veh	37.8	37.8	51.0	22.0	19.3	13.4
Incr Delay (d2), s/veh	18.6	29.4	6.6	0.1	0.7	0.2
Initial Q Delay(d3),s/veh	0.0	0.0	0.0	0.0	0.0	0.0
%ile BackOfQ(50%),veh/ln	14.9	16.2	2.3	4.8	5.2	0.9
Unsig. Movement Delay, s/veh						
LnGrp Delay(d),s/veh	56.4	67.2	57.6	22.1	20.0	13.6
LnGrp LOS	E	E	E	C	C	B
Approach Vol, veh/h	1481			937	676	
Approach Delay, s/veh	59.9			25.1	19.3	
Approach LOS	E			C	B	

Timer - Assigned Phs		2	3	4		8
Phs Duration (G+Y+Rc), s		56.6	13.4	40.0		53.4
Change Period (Y+Rc), s		6.0	7.0	7.0		7.0
Max Green Setting (Gmax), s		35.0	22.0	33.0		62.0
Max Q Clear Time (g_c+I1), s		14.3	6.7	33.0		14.6
Green Ext Time (p_c), s		1.9	0.1	0.0		6.2

Intersection Summary	
HCM 6th Ctrl Delay	40.5
HCM 6th LOS	D



Movement	EBL	EBT	EBR	WBL	WBT	WBR	NBL	NBT	NBR	SBL	SBT	SBR
Lane Configurations				*¡	+++	¡*¡*	*¡*¡	++T*				
Traffic Volume (veh/h)	762	354	52	70	372	376	67	322	62	396	497	451
Future Volume (veh/h)	762	354	52	70	372	376	67	322	62	396	497	451
Initial Q (Qb), veh	0	0	0	0	0	0	0	0	0	0	0	0
Ped-Bike Adj(A_pbT)	1.00		1.00	1.00		1.00	1.00		1.00	1.00		1.00
Parking Bus, Adj	1.00	1.00	1.00	1.00	1.00	1.00	1.00	1.00	1.00	1.00	1.00	1.00
Work Zone On Approach		No			No			No			No	
Adj Sat Flow, veh/h/ln	1900	1900	1900	1900	1900	1900	1900	1900	1900	1900	1900	1900
Adj Flow Rate, veh/h	802	373	55	74	392	396	71	339	65	417	523	475
Peak Hour Factor	0.95	0.95	0.95	0.95	0.95	0.95	0.95	0.95	0.95	0.95	0.95	0.95
Percent Heavy Veh, %	0	0	0	0	0	0	0	0	0	0	0	0
Cap, veh/h	453	1075	155	112	869	475	216	1697	315	458	1642	732
Arrive On Green	0.13	0.23	0.23	0.06	0.17	0.17	0.06	0.39	0.39	0.13	0.45	0.45
Sat Flow, veh/h	3510	4580	659	1810	5187	2834	3510	4395	816	3510	3610	1609
Grp Volume(v), veh/h	802	279	149	74	392	396	71	264	140	417	523	475
Grp Sat Flow(s),veh/h/ln	1755	1729	1781	1810	1729	1417	1755	1729	1753	1755	1805	1609
Q Serve(g_s), s	20.0	10.4	10.8	6.2	10.5	21.0	3.0	7.9	8.2	18.2	14.3	35.4
Cycle Q Clear(g_c), s	20.0	10.4	10.8	6.2	10.5	21.0	3.0	7.9	8.2	18.2	14.3	35.4
Prop In Lane	1.00		0.37	1.00		1.00	1.00		0.47	1.00		1.00
Lane Grp Cap(c), veh/h	453	811	418	112	869	475	216	1335	677	458	1642	732
V/C Ratio(X)	1.77	0.34	0.36	0.66	0.45	0.83	0.33	0.20	0.21	0.91	0.32	0.65
Avail Cap(c_a), veh/h	453	959	494	233	1439	786	464	1335	677	464	1642	732
HCM Platoon Ratio	1.00	1.00	1.00	1.00	1.00	1.00	1.00	1.00	1.00	1.00	1.00	1.00
Upstream Filter(I)	0.47	0.47	0.47	0.97	0.97	0.97	1.00	1.00	1.00	1.00	1.00	1.00
Uniform Delay (d), s/veh	67.5	49.4	49.5	71.1	58.1	62.4	69.7	31.6	31.7	66.5	26.9	32.7
Incr Delay (d2), s/veh	351.0	0.1	0.2	2.4	0.3	3.0	0.3	0.3	0.7	21.4	0.5	4.4
Initial Q Delay(d3),s/veh	0.0	0.0	0.0	0.0	0.0	0.0	0.0	0.0	0.0	0.0	0.0	0.0
%ile BackOfQ(50%),veh/ln	30.8	4.4	4.7	2.9	4.6	7.6	1.4	3.4	3.7	9.3	6.1	14.2
Unsig. Movement Delay, s/veh												
LnGrp Delay(d),s/veh	418.5	49.5	49.7	73.5	58.4	65.4	70.0	32.0	32.4	87.9	27.4	37.1
LnGrp LOS	F	D	D	E	E	E	E	C	C	F	C	D
Approach Vol, veh/h		1230			862			475			1415	
Approach Delay, s/veh		290.1			62.9			37.8			48.5	
Approach LOS		F			E			D			D	

Timer - Assigned Phs	1	2	3	4	5	6	7	8
Phs Duration (G+Y+Rc), s	17.0	78.0	27.0	33.0	27.7	67.3	16.6	43.4
Change Period (Y+Rc), s	7.5	7.5	7.0	7.0	7.5	7.5	7.0	7.0
Max Green Setting (Gmax), s	20.5	42.5	20.0	43.0	20.5	42.5	20.0	43.0
Max Q Clear Time (g_c+I1), s	15.0	37.4	22.0	23.0	20.2	10.2	8.2	12.8
Green Ext Time (p_c), s	0.1	1.9	0.0	3.0	0.0	2.1	0.0	1.9

Intersection Summary	
HCM 6th Ctrl Delay	125.0
HCM 6th LOS	F



Movement	EBT	EBR	WBL	WBT	NBL	NBR
Lane Configurations	+++	j*		+++	↰	↱
Traffic Volume (veh/h)	777	35	634	740	78	476
Future Volume (veh/h)	777	35	634	740	78	476
Initial Q (Qb), veh	0	0	0	0	0	0
Ped-Bike Adj(A_pbT)		1.00	1.00		1.00	1.00
Parking Bus, Adj	1.00	1.00	1.00	1.00	1.00	1.00
Work Zone On Approach	No			No	No	
Adj Sat Flow, veh/h/ln	1900	1900	1900	1900	1900	1900
Adj Flow Rate, veh/h	818	0	667	779	82	501
Peak Hour Factor	0.95	0.95	0.95	0.95	0.95	0.95
Percent Heavy Veh, %	0	0	0	0	0	0
Cap, veh/h	1240		302	2508	673	599
Arrive On Green	0.24	0.00	0.33	0.97	0.37	0.37
Sat Flow, veh/h	5358	1610	1810	5358	1810	1610
Grp Volume(v), veh/h	818	0	667	779	82	501
Grp Sat Flow(s),veh/h/ln	1729	1610	1810	1729	1810	1610
Q Serve(g_s), s	12.8	0.0	15.0	0.6	2.7	25.5
Cycle Q Clear(g_c), s	12.8	0.0	15.0	0.6	2.7	25.5
Prop In Lane		1.00	1.00		1.00	1.00
Lane Grp Cap(c), veh/h	1240		302	2508	673	599
V/C Ratio(X)	0.66		2.21	0.31	0.12	0.84
Avail Cap(c_a), veh/h	2017		302	3285	673	599
HCM Platoon Ratio	1.00	1.00	2.00	2.00	1.00	1.00
Upstream Filter(I)	0.73	0.00	0.87	0.87	1.00	1.00
Uniform Delay (d), s/veh	30.9	0.0	30.0	0.8	18.6	25.8
Incr Delay (d2), s/veh	0.5	0.0	554.6	0.1	0.4	13.0
Initial Q Delay(d3),s/veh	0.0	0.0	0.0	0.0	0.0	0.0
%ile BackOfQ(50%),veh/ln	5.3	0.0	51.2	0.2	1.1	10.8
Unsig. Movement Delay, s/veh						
LnGrp Delay(d),s/veh	31.5	0.0	584.6	0.9	19.0	38.8
LnGrp LOS	C		F	A	B	D
Approach Vol, veh/h	818			1446	583	
Approach Delay, s/veh	31.5			270.1	36.0	
Approach LOS	C			F	D	

Timer - Assigned Phs	2	3	4		8
Phs Duration (G+Y+Rc), s	39.5	22.0	28.5		50.5
Change Period (Y+Rc), s	6.0	7.0	7.0		7.0
Max Green Setting (Gmax), s	20.0	15.0	35.0		57.0
Max Q Clear Time (g_c+I1), s	27.5	17.0	14.8		2.6
Green Ext Time (p_c), s	0.0	0.0	6.7		6.8

Intersection Summary	
HCM 6th Ctrl Delay	153.6
HCM 6th LOS	F

Notes

Unsignalized Delay for [EBR] is excluded from calculations of the approach delay and intersection delay.



Movement	EBT	EBR	WBL	WBT	NBL	NBR
Lane Configurations	fff	↱	*1	W	W	↱
Traffic Volume (veh/h)	1208	45	90	1206	168	359
Future Volume (veh/h)	1208	45	90	1206	168	359
Initial Q (Qb), veh	0	0	0	0	0	0
Ped-Bike Adj(A_pbT)		1.00	1.00		1.00	1.00
Parking Bus, Adj	1.00	1.00	1.00	1.00	1.00	1.00
Work Zone On Approach	No			No	No	
Adj Sat Flow, veh/h/ln	1900	1900	1900	1900	1900	1900
Adj Flow Rate, veh/h	1272	0	95	1269	177	378
Peak Hour Factor	0.95	0.95	0.95	0.95	0.95	0.95
Percent Heavy Veh, %	0	0	0	0	0	0
Cap, veh/h	1504		146	2325	757	1347
Arrive On Green	0.10	0.00	0.08	0.45	0.42	0.42
Sat Flow, veh/h	5358	1610	1810	5358	1810	3220
Grp Volume(v), veh/h	1272	0	95	1269	177	378
Grp Sat Flow(s),veh/h/ln	1729	1610	1810	1729	1810	1610
Q Serve(g_s), s	21.7	0.0	4.6	16.1	5.7	7.0
Cycle Q Clear(g_c), s	21.7	0.0	4.6	16.1	5.7	7.0
Prop In Lane		1.00	1.00		1.00	1.00
Lane Grp Cap(c), veh/h	1504		146	2325	757	1347
V/C Ratio(X)	0.85		0.65	0.55	0.23	0.28
Avail Cap(c_a), veh/h	1556		462	3285	757	1347
HCM Platoon Ratio	0.33	0.33	1.00	1.00	1.00	1.00
Upstream Filter(I)	0.76	0.00	1.00	1.00	1.00	1.00
Uniform Delay (d), s/veh	38.7	0.0	40.1	18.1	16.9	17.2
Incr Delay (d2), s/veh	3.5	0.0	1.8	0.2	0.7	0.5
Initial Q Delay(d3),s/veh	0.0	0.0	0.0	0.0	0.0	0.0
%ile BackOfQ(50%),veh/ln	10.3	0.0	2.0	5.7	2.5	2.4
Unsig. Movement Delay, s/veh						
LnGrp Delay(d),s/veh	42.2	0.0	42.0	18.4	17.6	17.8
LnGrp LOS	D		D	B	B	B
Approach Vol, veh/h	1272			1364	555	
Approach Delay, s/veh	42.2			20.0	17.7	
Approach LOS	D			C	B	

Timer - Assigned Phs	2	3	4		8
Phs Duration (G+Y+Rc), s	42.7	14.3	33.1		47.3
Change Period (Y+Rc), s	5.0	7.0	7.0		7.0
Max Green Setting (Gmax), s	21.0	23.0	27.0		57.0
Max Q Clear Time (g_c+I1), s	9.0	6.6	23.7		18.1
Green Ext Time (p_c), s	1.4	0.1	2.4		12.6

Intersection Summary	
HCM 6th Ctrl Delay	28.5
HCM 6th LOS	C

Notes

User approved volume balancing among the lanes for turning movement.
User approved ignoring U-Turning movement.
Unsignalized Delay for [EBR] is excluded from calculations of the approach delay and intersection delay.

Intersection	
Int Delay, s/veh	0.1

Movement	EBL	EBR	NBL	NBT	SBT	SBR
Lane Configurations		¡*		f+f	+++	¡*
Traffic Vol, veh/h	0	15	0	951	1226	65
Future Vol, veh/h	0	15	0	951	1226	65
Conflicting Peds, #/hr	0	0	0	0	0	0
Sign Control	Stop	Stop	Free	Free	Free	Free
RT Channelized	-	None	-	None	-	None
Storage Length	-	0	-	-	-	175
Veh in Median Storage, #	0	-	-	0	0	-
Grade, %	0	-	-	0	0	-
Peak Hour Factor	97	97	97	97	97	97
Heavy Vehicles, %	0	0	0	0	0	0
Mvmt Flow	0	15	0	980	1264	67

Major/Minor	Minor2		Major1		Major2	
Conflicting Flow All	-	632	-	0	-	0
Stage 1	-	-	-	-	-	-
Stage 2	-	-	-	-	-	-
Critical Hdwy	-	7.1	-	-	-	-
Critical Hdwy Stg 1	-	-	-	-	-	-
Critical Hdwy Stg 2	-	-	-	-	-	-
Follow-up Hdwy	-	3.9	-	-	-	-
Pot Cap-1 Maneuver	0	367	0	-	-	-
Stage 1	0	-	0	-	-	-
Stage 2	0	-	0	-	-	-
Platoon blocked, %				-	-	-
Mov Cap-1 Maneuver	-	367	-	-	-	-
Mov Cap-2 Maneuver	-	-	-	-	-	-
Stage 1	-	-	-	-	-	-
Stage 2	-	-	-	-	-	-

Approach	EB	NB	SB
HCM Control Delay, s	15.2	0	0
HCM LOS	C		

Minor Lane/Major Mvmt	NBT	EBLn1	SBT	SBR
Capacity (veh/h)	-	367	-	-
HCM Lane V/C Ratio	-	0.042	-	-
HCM Control Delay (s)	-	15.2	-	-
HCM Lane LOS	-	C	-	-
HCM 95th %tile Q(veh)	-	0.1	-	-

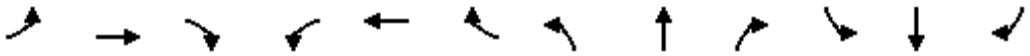

Movement	EBL	EBT	EBR	WBL	WBT	WBR	NBL	NBT	NBR	SBL	SBT	SBR
Lane Configurations	*i	T*		*i	T*		*i	++T*		*i	f+'b	
Traffic Volume (veh/h)	151	0	54	12	0	12	106	788	42	20	1208	12
Future Volume (veh/h)	151	0	54	12	0	12	106	788	42	20	1208	12
Initial Q (Qb), veh	0	0	0	0	0	0	0	0	0	0	0	0
Ped-Bike Adj(A_pbT)	1.00		1.00	1.00		1.00	1.00		1.00	1.00		0.98
Parking Bus, Adj	1.00	1.00	1.00	1.00	1.00	1.00	1.00	1.00	1.00	1.00	1.00	1.00
Work Zone On Approach		No			No			No			No	
Adj Sat Flow, veh/h/ln	1900	1900	1900	1900	1900	1900	1900	1900	1900	1900	1900	1900
Adj Flow Rate, veh/h	159	0	57	13	0	13	112	829	44	21	1272	13
Peak Hour Factor	0.95	0.95	0.95	0.95	0.95	0.95	0.95	0.95	0.95	0.95	0.95	0.94
Percent Heavy Veh, %	0	0	0	0	0	0	0	0	0	0	0	0
Cap, veh/h	269	0	238	228	0	238	142	3410	180	39	3279	34
Arrive On Green	0.15	0.00	0.15	0.15	0.00	0.15	0.08	0.68	0.68	0.02	0.62	0.62
Sat Flow, veh/h	1423	0	1610	1368	0	1610	1810	5043	267	1810	5293	54
Grp Volume(v), veh/h	159	0	57	13	0	13	112	568	305	21	831	454
Grp Sat Flow(s),veh/h/ln	1423	0	1610	1368	0	1610	1810	1729	1852	1810	1729	1889
Q Serve(g_s), s	11.3	0.0	3.3	0.9	0.0	0.7	6.4	6.7	6.7	1.2	12.6	12.6
Cycle Q Clear(g_c), s	12.1	0.0	3.3	4.2	0.0	0.7	6.4	6.7	6.7	1.2	12.6	12.6
Prop In Lane	1.00		1.00	1.00		1.00	1.00		0.14	1.00		0.03
Lane Grp Cap(c), veh/h	269	0	238	228	0	238	142	2338	1252	39	2142	1170
V/C Ratio(X)	0.59	0.00	0.24	0.06	0.00	0.05	0.79	0.24	0.24	0.53	0.39	0.39
Avail Cap(c_a), veh/h	476	0	472	427	0	472	224	2338	1252	224	2142	1170
HCM Platoon Ratio	1.00	1.00	1.00	1.00	1.00	1.00	1.00	1.00	1.00	1.00	1.00	1.00
Upstream Filter(I)	1.00	0.00	1.00	1.00	0.00	1.00	1.00	1.00	1.00	1.00	1.00	1.00
Uniform Delay (d), s/veh	43.6	0.0	39.5	41.4	0.0	38.5	47.5	6.6	6.6	50.8	10.0	10.0
Incr Delay (d2), s/veh	4.4	0.0	1.1	0.2	0.0	0.2	18.2	0.2	0.5	21.7	0.5	1.0
Initial Q Delay(d3),s/veh	0.0	0.0	0.0	0.0	0.0	0.0	0.0	0.0	0.0	0.0	0.0	0.0
%ile BackOfQ(50%),veh/ln	4.3	0.0	1.4	0.3	0.0	0.3	3.5	2.0	2.2	0.8	4.2	4.7
Unsig. Movement Delay, s/veh												
LnGrp Delay(d),s/veh	48.0	0.0	40.6	41.6	0.0	38.7	65.7	6.8	7.1	72.6	10.5	11.0
LnGrp LOS	D	A	D	D	A	D	E	A	A	E	B	B
Approach Vol, veh/h		216			26			985			1306	
Approach Delay, s/veh		46.1			40.1			13.6			11.7	
Approach LOS		D			D			B			B	

Timer - Assigned Phs	1	2		4	5	6		8				
Phs Duration (G+Y+Rc), s	6.3	77.0		21.7	12.3	71.0		21.7				
Change Period (Y+Rc), s	4.0	* 6		6.2	4.0	* 6		6.2				
Max Green Setting (Gmax), s	13.0	* 45		30.8	13.0	* 45		30.8				
Max Q Clear Time (g_c+I1), s	3.2	8.7		14.1	8.4	14.6		6.2				
Green Ext Time (p_c), s	0.0	11.7		1.4	0.2	17.0		0.1				

Intersection Summary		
HCM 6th Ctrl Delay		15.7
HCM 6th LOS		B

Notes

* HCM 6th computational engine requires equal clearance times for the phases crossing the barrier.



Movement	EBT	EBR	WBL	WBT	NBL	NBR
Lane Configurations	++1*					
Traffic Volume (veh/h)	1647	226	63	946	280	101
Future Volume (veh/h)	1647	226	63	946	280	101
Initial Q (Qb), veh	0	0	0	0	0	0
Ped-Bike Adj(A_pbT)		1.00	1.00		1.00	1.00
Parking Bus, Adj	1.00	1.00	1.00	1.00	1.00	1.00
Work Zone On Approach	No			No	No	
Adj Sat Flow, veh/h/ln	1900	1900	1900	1900	1900	1900
Adj Flow Rate, veh/h	1716	235	66	985	292	105
Peak Hour Factor	0.96	0.96	0.96	0.96	0.96	0.96
Percent Heavy Veh, %	0	0	0	0	0	0
Cap, veh/h	1469	200	100	2267	1562	805
Arrive On Green	0.32	0.32	0.06	0.44	0.44	0.44
Sat Flow, veh/h	4787	629	1810	5358	3510	1610
Grp Volume(v), veh/h	1283	668	66	985	292	105
Grp Sat Flow(s),veh/h/ln	1729	1787	1810	1729	1755	1610
Q Serve(g_s), s	35.0	35.0	3.9	14.5	5.5	3.8
Cycle Q Clear(g_c), s	35.0	35.0	3.9	14.5	5.5	3.8
Prop In Lane		0.35	1.00		1.00	1.00
Lane Grp Cap(c), veh/h	1100	569	100	2267	1562	805
V/C Ratio(X)	1.17	1.17	0.66	0.43	0.19	0.13
Avail Cap(c_a), veh/h	1100	569	329	2924	1562	805
HCM Platoon Ratio	1.00	1.00	1.00	1.00	1.00	1.00
Upstream Filter(I)	1.00	1.00	0.85	0.85	1.00	1.00
Uniform Delay (d), s/veh	37.5	37.5	51.0	21.5	18.5	14.7
Incr Delay (d2), s/veh	85.0	95.9	4.7	0.1	0.3	0.3
Initial Q Delay(d3),s/veh	0.0	0.0	0.0	0.0	0.0	0.0
%ile BackOfQ(50%),veh/ln	26.7	29.4	1.8	5.5	2.3	1.4
Unsig. Movement Delay, s/veh						
LnGrp Delay(d),s/veh	122.5	133.4	55.6	21.6	18.8	15.0
LnGrp LOS	F	F	E	C	B	B
Approach Vol, veh/h	1951			1051	397	
Approach Delay, s/veh	126.2			23.8	17.8	
Approach LOS	F			C	B	

Timer - Assigned Phs		2	3	4		8
Phs Duration (G+Y+Rc), s		54.9	13.1	42.0		55.1
Change Period (Y+Rc), s		6.0	7.0	7.0		7.0
Max Green Setting (Gmax), s		35.0	20.0	35.0		62.0
Max Q Clear Time (g_c+I1), s		7.5	5.9	37.0		16.5
Green Ext Time (p_c), s		1.1	0.1	0.0		7.3

Intersection Summary	
HCM 6th Ctrl Delay	81.9
HCM 6th LOS	F



Movement	EBL	EBT	EBR	WBL	WBT	WBR	NBL	NBT	NBR	SBL	SBT	SBR
Lane Configurations				*i	+++	i*i*	*i*i	++T*				
Traffic Volume (veh/h)	903	810	35	146	516	779	13	98	57	637	296	480
Future Volume (veh/h)	903	810	35	146	516	779	13	98	57	637	296	480
Initial Q (Qb), veh	0	0	0	0	0	0	0	0	0	0	0	0
Ped-Bike Adj(A_pbT)	1.00		1.00	1.00		1.00	1.00		1.00	1.00		1.00
Parking Bus, Adj	1.00	1.00	1.00	1.00	1.00	1.00	1.00	1.00	1.00	1.00	1.00	1.00
Work Zone On Approach		No			No			No			No	
Adj Sat Flow, veh/h/ln	1900	1900	1900	1900	1900	1900	1900	1900	1900	1900	1900	1900
Adj Flow Rate, veh/h	951	853	37	154	543	820	14	103	60	671	312	505
Peak Hour Factor	0.95	0.95	0.95	0.95	0.95	0.95	0.95	0.95	0.95	0.95	0.95	0.95
Percent Heavy Veh, %	0	0	0	0	0	0	0	0	0	0	0	0
Cap, veh/h	453	1576	68	176	1439	786	103	948	441	464	1362	607
Arrive On Green	0.13	0.31	0.31	0.10	0.28	0.28	0.03	0.27	0.27	0.13	0.38	0.38
Sat Flow, veh/h	3510	5098	221	1810	5187	2834	3510	3458	1610	3510	3610	1610
Grp Volume(v), veh/h	951	578	312	154	543	820	14	103	60	671	312	505
Grp Sat Flow(s),veh/h/ln	1755	1729	1860	1810	1729	1417	1755	1729	1610	1755	1805	1610
Q Serve(g_s), s	20.0	21.5	21.6	13.0	13.1	43.0	0.6	3.5	4.4	20.5	9.1	44.1
Cycle Q Clear(g_c), s	20.0	21.5	21.6	13.0	13.1	43.0	0.6	3.5	4.4	20.5	9.1	44.1
Prop In Lane	1.00		0.12	1.00		1.00	1.00		1.00	1.00		1.00
Lane Grp Cap(c), veh/h	453	1069	575	176	1439	786	103	948	441	464	1362	607
V/C Ratio(X)	2.10	0.54	0.54	0.88	0.38	1.04	0.14	0.11	0.14	1.45	0.23	0.83
Avail Cap(c_a), veh/h	453	1069	575	233	1439	786	464	948	441	464	1362	607
HCM Platoon Ratio	1.00	1.00	1.00	1.00	1.00	1.00	1.00	1.00	1.00	1.00	1.00	1.00
Upstream Filter(I)	0.36	0.36	0.36	0.91	0.91	0.91	1.00	1.00	1.00	1.00	1.00	1.00
Uniform Delay (d), s/veh	67.5	44.4	44.4	69.0	45.2	56.0	73.3	42.1	42.4	67.3	32.9	43.8
Incr Delay (d2), s/veh	497.5	0.2	0.3	18.4	0.1	42.4	0.2	0.2	0.6	212.2	0.4	12.5
Initial Q Delay(d3),s/veh	0.0	0.0	0.0	0.0	0.0	0.0	0.0	0.0	0.0	0.0	0.0	0.0
%ile BackOfQ(50%),veh/ln	40.1	9.0	9.8	6.8	5.5	19.5	0.3	1.5	1.8	22.7	4.0	19.1
Unsig. Movement Delay, s/veh												
LnGrp Delay(d),s/veh	565.0	44.6	44.7	87.4	45.3	98.4	73.6	42.3	43.0	279.5	33.3	56.3
LnGrp LOS	F	D	D	F	D	F	E	D	D	F	C	E
Approach Vol, veh/h		1841			1517			177			1488	
Approach Delay, s/veh		313.4			78.3			45.0			152.1	
Approach LOS		F			E			D			F	

Timer - Assigned Phs	1	2	3	4	5	6	7	8
Phs Duration (G+Y+Rc), s	12.0	66.0	27.0	50.0	28.0	50.0	22.1	54.9
Change Period (Y+Rc), s	7.5	7.5	7.0	7.0	7.5	7.5	7.0	7.0
Max Green Setting (Gmax), s	20.5	42.5	20.0	43.0	20.5	42.5	20.0	43.0
Max Q Clear Time (g_c+I1), s	12.6	46.1	22.0	45.0	22.5	6.4	15.0	23.6
Green Ext Time (p_c), s	0.0	0.0	0.0	0.0	0.0	0.8	0.1	4.0

Intersection Summary		
HCM 6th Ctrl Delay		185.2
HCM 6th LOS		F



Movement	EBT	EBR	WBL	WBT	NBL	NBR
Lane Configurations	+++	j*		+++	↰	↱
Traffic Volume (veh/h)	1491	12	293	1310	131	228
Future Volume (veh/h)	1491	12	293	1310	131	228
Initial Q (Qb), veh	0	0	0	0	0	0
Ped-Bike Adj(A_pbT)		1.00	1.00		1.00	1.00
Parking Bus, Adj	1.00	1.00	1.00	1.00	1.00	1.00
Work Zone On Approach	No			No	No	
Adj Sat Flow, veh/h/ln	1900	1900	1900	1900	1900	1900
Adj Flow Rate, veh/h	1569	0	308	1379	138	240
Peak Hour Factor	0.95	0.95	0.95	0.95	0.95	0.95
Percent Heavy Veh, %	0	0	0	0	0	0
Cap, veh/h	1945		281	3156	447	398
Arrive On Green	0.38	0.00	0.10	0.41	0.25	0.25
Sat Flow, veh/h	5358	1610	1810	5358	1810	1610
Grp Volume(v), veh/h	1569	0	308	1379	138	240
Grp Sat Flow(s),veh/h/ln	1729	1610	1810	1729	1810	1610
Q Serve(g_s), s	24.4	0.0	14.0	17.2	5.6	11.9
Cycle Q Clear(g_c), s	24.4	0.0	14.0	17.2	5.6	11.9
Prop In Lane		1.00	1.00		1.00	1.00
Lane Grp Cap(c), veh/h	1945		281	3156	447	398
V/C Ratio(X)	0.81		1.09	0.44	0.31	0.60
Avail Cap(c_a), veh/h	2075		281	3285	447	398
HCM Platoon Ratio	1.00	1.00	0.67	0.67	1.00	1.00
Upstream Filter(I)	0.43	0.00	0.85	0.85	1.00	1.00
Uniform Delay (d), s/veh	25.2	0.0	40.3	15.5	27.6	30.0
Incr Delay (d2), s/veh	1.0	0.0	77.1	0.1	1.8	6.6
Initial Q Delay(d3),s/veh	0.0	0.0	0.0	0.0	0.0	0.0
%ile BackOfQ(50%),veh/ln	9.7	0.0	12.2	6.9	2.5	5.0
Unsig. Movement Delay, s/veh						
LnGrp Delay(d),s/veh	26.2	0.0	117.4	15.6	29.4	36.6
LnGrp LOS	C		F	B	C	D
Approach Vol, veh/h	1569			1687	378	
Approach Delay, s/veh	26.2			34.2	34.0	
Approach LOS	C			C	C	

Timer - Assigned Phs	2	3	4		8
Phs Duration (G+Y+Rc), s	28.2	21.0	40.8		61.8
Change Period (Y+Rc), s	6.0	7.0	7.0		7.0
Max Green Setting (Gmax), s	20.0	14.0	36.0		57.0
Max Q Clear Time (g_c+I1), s	13.9	16.0	26.4		19.2
Green Ext Time (p_c), s	0.5	0.0	7.4		14.0

Intersection Summary	
HCM 6th Ctrl Delay	30.8
HCM 6th LOS	C

Notes

Unsignalized Delay for [EBR] is excluded from calculations of the approach delay and intersection delay.



Movement	EBT	EBR	WBL	WBT	NBL	NBR
Lane Configurations	fff	↱	*1	W	W	↱
Traffic Volume (veh/h)	1690	29	64	1525	78	95
Future Volume (veh/h)	1690	29	64	1525	78	95
Initial Q (Qb), veh	0	0	0	0	0	0
Ped-Bike Adj(A_pbT)		1.00	1.00		1.00	1.00
Parking Bus, Adj	1.00	1.00	1.00	1.00	1.00	1.00
Work Zone On Approach	No			No	No	
Adj Sat Flow, veh/h/ln	1900	1900	1900	1900	1900	1900
Adj Flow Rate, veh/h	1779	0	67	1605	61	123
Peak Hour Factor	0.95	0.95	0.95	0.95	0.95	0.95
Percent Heavy Veh, %	0	0	0	0	0	0
Cap, veh/h	1729		131	2507	694	1234
Arrive On Green	0.67	0.00	0.07	0.48	0.38	0.38
Sat Flow, veh/h	5358	1610	1810	5358	1810	3220
Grp Volume(v), veh/h	1779	0	67	1605	61	123
Grp Sat Flow(s),veh/h/ln	1729	1610	1810	1729	1810	1610
Q Serve(g_s), s	30.0	0.0	3.2	20.8	1.9	2.2
Cycle Q Clear(g_c), s	30.0	0.0	3.2	20.8	1.9	2.2
Prop In Lane		1.00	1.00		1.00	1.00
Lane Grp Cap(c), veh/h	1729		131	2507	694	1234
V/C Ratio(X)	1.03		0.51	0.64	0.09	0.10
Avail Cap(c_a), veh/h	1729		402	3285	694	1234
HCM Platoon Ratio	2.00	2.00	1.00	1.00	1.00	1.00
Upstream Filter(I)	0.56	0.00	1.00	1.00	1.00	1.00
Uniform Delay (d), s/veh	15.0	0.0	40.2	17.4	17.7	17.8
Incr Delay (d2), s/veh	24.2	0.0	1.2	0.3	0.3	0.2
Initial Q Delay(d3),s/veh	0.0	0.0	0.0	0.0	0.0	0.0
%ile BackOfQ(50%),veh/ln	8.3	0.0	1.4	7.1	0.9	0.8
Unsig. Movement Delay, s/veh						
LnGrp Delay(d),s/veh	39.2	0.0	41.4	17.7	18.0	18.0
LnGrp LOS	F		D	B	B	B
Approach Vol, veh/h	1779			1672	184	
Approach Delay, s/veh	39.2			18.7	18.0	
Approach LOS	D			B	B	

Timer - Assigned Phs	2	3	4		8
Phs Duration (G+Y+Rc), s	39.5	13.5	37.0		50.5
Change Period (Y+Rc), s	5.0	7.0	7.0		7.0
Max Green Setting (Gmax), s	21.0	20.0	30.0		57.0
Max Q Clear Time (g_c+I1), s	4.2	5.2	32.0		22.8
Green Ext Time (p_c), s	0.4	0.0	0.0		16.6

Intersection Summary	
HCM 6th Ctrl Delay	28.7
HCM 6th LOS	C

Notes

User approved volume balancing among the lanes for turning movement.
User approved ignoring U-Turning movement.
Unsignalized Delay for [EBR] is excluded from calculations of the approach delay and intersection delay.

Intersection	
Int Delay, s/veh	0.2

Movement	EBL	EBR	NBL	NBT	SBT	SBR
Lane Configurations		¡*		f+f	+++	¡*
Traffic Vol, veh/h	0	42	0	2063	1045	29
Future Vol, veh/h	0	42	0	2063	1045	29
Conflicting Peds, #/hr	0	0	0	0	0	0
Sign Control	Stop	Stop	Free	Free	Free	Free
RT Channelized	-	None	-	None	-	None
Storage Length	-	0	-	-	-	175
Veh in Median Storage, #	0	-	-	0	0	-
Grade, %	0	-	-	0	0	-
Peak Hour Factor	95	95	95	95	95	95
Heavy Vehicles, %	0	0	0	0	0	0
Mvmt Flow	0	44	0	2172	1100	31

Major/Minor	Minor2		Major1		Major2	
Conflicting Flow All	-	550	-	0	-	0
Stage 1	-	-	-	-	-	-
Stage 2	-	-	-	-	-	-
Critical Hdwy	-	7.1	-	-	-	-
Critical Hdwy Stg 1	-	-	-	-	-	-
Critical Hdwy Stg 2	-	-	-	-	-	-
Follow-up Hdwy	-	3.9	-	-	-	-
Pot Cap-1 Maneuver	0	414	0	-	-	-
Stage 1	0	-	0	-	-	-
Stage 2	0	-	0	-	-	-
Platoon blocked, %				-	-	-
Mov Cap-1 Maneuver	-	414	-	-	-	-
Mov Cap-2 Maneuver	-	-	-	-	-	-
Stage 1	-	-	-	-	-	-
Stage 2	-	-	-	-	-	-

Approach	EB	NB	SB
HCM Control Delay, s	14.7	0	0
HCM LOS	B		

Minor Lane/Major Mvmt	NBT	EBLn1	SBT	SBR
Capacity (veh/h)	-	414	-	-
HCM Lane V/C Ratio	-	0.107	-	-
HCM Control Delay (s)	-	14.7	-	-
HCM Lane LOS	-	B	-	-
HCM 95th %tile Q(veh)	-	0.4	-	-

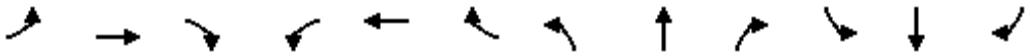

Movement	EBL	EBT	EBR	WBL	WBT	WBR	NBL	NBT	NBR	SBL	SBT	SBR
Lane Configurations	*i	T*		*i	T*		*i	++T*		*i	f+'b	
Traffic Volume (veh/h)	189	2	83	27	8	35	176	1839	8	19	1034	34
Future Volume (veh/h)	189	2	83	27	8	35	176	1839	8	19	1034	34
Initial Q (Qb), veh	0	0	0	0	0	0	0	0	0	0	0	0
Ped-Bike Adj(A_pbT)	1.00		1.00	1.00		1.00	1.00		0.98	1.00		1.00
Parking Bus, Adj	1.00	1.00	1.00	1.00	1.00	1.00	1.00	1.00	1.00	1.00	1.00	1.00
Work Zone On Approach		No			No			No			No	
Adj Sat Flow, veh/h/ln	1900	1900	1900	1900	1900	1900	1900	1900	1900	1900	1900	1900
Adj Flow Rate, veh/h	199	2	87	28	8	37	185	1936	8	20	1088	36
Peak Hour Factor	0.95	0.95	0.95	0.95	0.95	0.95	0.95	0.95	0.95	0.95	0.95	0.95
Percent Heavy Veh, %	0	0	0	0	0	0	0	0	0	0	0	0
Cap, veh/h	305	7	309	263	58	266	197	3392	14	38	2825	93
Arrive On Green	0.20	0.20	0.20	0.20	0.20	0.20	0.11	0.64	0.64	0.02	0.55	0.55
Sat Flow, veh/h	1383	36	1579	1329	294	1361	1810	5331	22	1810	5156	170
Grp Volume(v), veh/h	199	0	89	28	0	45	185	1256	688	20	729	395
Grp Sat Flow(s),veh/h/ln	1383	0	1616	1329	0	1655	1810	1729	1895	1810	1729	1868
Q Serve(g_s), s	15.3	0.0	5.2	2.0	0.0	2.5	11.2	22.8	22.8	1.2	13.3	13.3
Cycle Q Clear(g_c), s	17.8	0.0	5.2	7.2	0.0	2.5	11.2	22.8	22.8	1.2	13.3	13.3
Prop In Lane	1.00		0.98	1.00		0.82	1.00		0.01	1.00		0.09
Lane Grp Cap(c), veh/h	305	0	316	263	0	324	197	2200	1206	38	1895	1024
V/C Ratio(X)	0.65	0.00	0.28	0.11	0.00	0.14	0.94	0.57	0.57	0.53	0.38	0.39
Avail Cap(c_a), veh/h	434	0	467	387	0	478	197	2200	1206	197	1895	1024
HCM Platoon Ratio	1.00	1.00	1.00	1.00	1.00	1.00	1.00	1.00	1.00	1.00	1.00	1.00
Upstream Filter(I)	1.00	0.00	1.00	1.00	0.00	1.00	1.00	1.00	1.00	1.00	1.00	1.00
Uniform Delay (d), s/veh	43.9	0.0	37.7	40.7	0.0	36.6	48.6	11.4	11.4	53.3	14.2	14.2
Incr Delay (d2), s/veh	5.0	0.0	1.0	0.4	0.0	0.4	47.4	1.1	2.0	22.7	0.6	1.1
Initial Q Delay(d3),s/veh	0.0	0.0	0.0	0.0	0.0	0.0	0.0	0.0	0.0	0.0	0.0	0.0
%ile BackOfQ(50%),veh/ln	5.7	0.0	2.2	0.7	0.0	1.1	7.4	7.6	8.6	0.8	4.8	5.3
Unsig. Movement Delay, s/veh												
LnGrp Delay(d),s/veh	48.9	0.0	38.7	41.1	0.0	37.0	96.0	12.5	13.4	76.0	14.8	15.3
LnGrp LOS	D	A	D	D	A	D	F	B	B	E	B	B
Approach Vol, veh/h		288			73			2129			1144	
Approach Delay, s/veh		45.7			38.6			20.0			16.1	
Approach LOS		D			D			C			B	

Timer - Assigned Phs	1	2		4	5	6		8				
Phs Duration (G+Y+Rc), s	6.3	76.0		27.7	16.0	66.3		27.7				
Change Period (Y+Rc), s	4.0	* 6		6.2	4.0	* 6		6.2				
Max Green Setting (Gmax), s	12.0	* 50		31.8	12.0	* 50		31.8				
Max Q Clear Time (g_c+I1), s	3.2	24.8		19.8	13.2	15.3		9.2				
Green Ext Time (p_c), s	0.0	21.3		1.8	0.0	15.7		0.5				

Intersection Summary		
HCM 6th Ctrl Delay		21.2
HCM 6th LOS		C

Notes

* HCM 6th computational engine requires equal clearance times for the phases crossing the barrier.



Movement	EBT	EBR	WBL	WBT	NBL	NBR
Lane Configurations	++1*					
Traffic Volume (veh/h)	1099	308	62	815	573	69
Future Volume (veh/h)	1099	308	62	815	573	69
Initial Q (Qb), veh	0	0	0	0	0	0
Ped-Bike Adj(A_pbT)		1.00	1.00		1.00	1.00
Parking Bus, Adj	1.00	1.00	1.00	1.00	1.00	1.00
Work Zone On Approach	No			No	No	
Adj Sat Flow, veh/h/ln	1900	1900	1900	1900	1900	1900
Adj Flow Rate, veh/h	1221	342	69	906	637	77
Peak Hour Factor	0.90	0.90	0.90	0.90	0.90	0.90
Percent Heavy Veh, %	0	0	0	0	0	0
Cap, veh/h	1279	358	101	2268	1561	806
Arrive On Green	0.32	0.32	0.06	0.44	0.44	0.44
Sat Flow, veh/h	4198	1128	1810	5358	3510	1610
Grp Volume(v), veh/h	1048	515	69	906	637	77
Grp Sat Flow(s),veh/h/ln	1729	1697	1810	1729	1755	1610
Q Serve(g_s), s	32.7	32.7	4.1	13.1	13.5	2.8
Cycle Q Clear(g_c), s	32.7	32.7	4.1	13.1	13.5	2.8
Prop In Lane		0.66	1.00		1.00	1.00
Lane Grp Cap(c), veh/h	1098	539	101	2268	1561	806
V/C Ratio(X)	0.95	0.95	0.68	0.40	0.41	0.10
Avail Cap(c_a), veh/h	1100	540	329	2924	1561	806
HCM Platoon Ratio	1.00	1.00	1.00	1.00	1.00	1.00
Upstream Filter(I)	1.00	1.00	0.82	0.82	1.00	1.00
Uniform Delay (d), s/veh	36.7	36.8	51.0	21.1	20.7	14.4
Incr Delay (d2), s/veh	17.2	27.7	4.9	0.1	0.8	0.2
Initial Q Delay(d3),s/veh	0.0	0.0	0.0	0.0	0.0	0.0
%ile BackOfQ(50%),veh/ln	15.5	16.7	1.9	4.9	5.7	1.0
Unsig. Movement Delay, s/veh						
LnGrp Delay(d),s/veh	54.0	64.4	55.8	21.2	21.5	14.6
LnGrp LOS	D	E	E	C	C	B
Approach Vol, veh/h	1563			975	714	
Approach Delay, s/veh	57.4			23.7	20.8	
Approach LOS	E			C	C	

Timer - Assigned Phs		2	3	4		8
Phs Duration (G+Y+Rc), s		54.9	13.1	41.9		55.1
Change Period (Y+Rc), s		6.0	7.0	7.0		7.0
Max Green Setting (Gmax), s		35.0	20.0	35.0		62.0
Max Q Clear Time (g_c+I1), s		15.5	6.1	34.7		15.1
Green Ext Time (p_c), s		2.0	0.1	0.3		6.6

Intersection Summary	
HCM 6th Ctrl Delay	39.3
HCM 6th LOS	D



Movement	EBL	EBT	EBR	WBL	WBT	WBR	NBL	NBT	NBR	SBL	SBT	SBR
Lane Configurations				*i	+++	i*i*	*i*i	++T*				
Traffic Volume (veh/h)	762	354	52	70	372	364	67	322	62	396	495	438
Future Volume (veh/h)	762	354	52	70	372	364	67	322	62	396	495	438
Initial Q (Qb), veh	0	0	0	0	0	0	0	0	0	0	0	0
Ped-Bike Adj(A_pbT)	1.00		1.00	1.00		1.00	1.00		1.00	1.00		1.00
Parking Bus, Adj	1.00	1.00	1.00	1.00	1.00	1.00	1.00	1.00	1.00	1.00	1.00	1.00
Work Zone On Approach		No			No			No			No	
Adj Sat Flow, veh/h/ln	1900	1900	1900	1900	1900	1900	1900	1900	1900	1900	1900	1900
Adj Flow Rate, veh/h	847	393	58	78	413	404	74	358	69	440	550	487
Peak Hour Factor	0.90	0.90	0.90	0.90	0.90	0.90	0.90	0.90	0.90	0.90	0.90	0.90
Percent Heavy Veh, %	0	0	0	0	0	0	0	0	0	0	0	0
Cap, veh/h	498	1145	165	113	884	483	217	1617	302	464	1584	706
Arrive On Green	0.14	0.25	0.25	0.06	0.17	0.17	0.06	0.37	0.37	0.13	0.44	0.44
Sat Flow, veh/h	3510	4579	660	1810	5187	2834	3510	4390	820	3510	3610	1609
Grp Volume(v), veh/h	847	295	156	78	413	404	74	280	147	440	550	487
Grp Sat Flow(s),veh/h/ln	1755	1729	1781	1810	1729	1417	1755	1729	1752	1755	1805	1609
Q Serve(g_s), s	22.0	10.8	11.2	6.5	11.1	21.4	3.1	8.6	9.0	19.3	15.6	37.8
Cycle Q Clear(g_c), s	22.0	10.8	11.2	6.5	11.1	21.4	3.1	8.6	9.0	19.3	15.6	37.8
Prop In Lane	1.00		0.37	1.00		1.00	1.00		0.47	1.00		1.00
Lane Grp Cap(c), veh/h	498	865	445	113	884	483	217	1274	645	464	1584	706
V/C Ratio(X)	1.70	0.34	0.35	0.69	0.47	0.84	0.34	0.22	0.23	0.95	0.35	0.69
Avail Cap(c_a), veh/h	498	959	494	233	1372	750	464	1274	645	464	1584	706
HCM Platoon Ratio	1.00	1.00	1.00	1.00	1.00	1.00	1.00	1.00	1.00	1.00	1.00	1.00
Upstream Filter(I)	0.45	0.45	0.45	0.97	0.97	0.97	1.00	1.00	1.00	1.00	1.00	1.00
Uniform Delay (d), s/veh	66.5	47.6	47.8	71.2	58.0	62.2	69.7	33.6	33.8	66.7	28.8	35.0
Incr Delay (d2), s/veh	318.9	0.1	0.2	2.7	0.3	4.0	0.3	0.4	0.8	28.6	0.6	5.5
Initial Q Delay(d3),s/veh	0.0	0.0	0.0	0.0	0.0	0.0	0.0	0.0	0.0	0.0	0.0	0.0
%ile BackOfQ(50%),veh/ln	31.7	4.6	4.9	3.1	4.8	7.8	1.4	3.7	4.0	10.3	6.8	15.3
Unsig. Movement Delay, s/veh												
LnGrp Delay(d),s/veh	385.4	47.7	47.9	74.0	58.2	66.2	70.0	34.0	34.6	95.4	29.4	40.5
LnGrp LOS	F	D	D	E	E	E	E	C	C	F	C	D
Approach Vol, veh/h		1298			895			501			1477	
Approach Delay, s/veh		268.1			63.2			39.5			52.7	
Approach LOS		F			E			D			D	

Timer - Assigned Phs	1	2	3	4	5	6	7	8
Phs Duration (G+Y+Rc), s	17.1	75.5	29.0	33.4	28.0	64.6	16.7	45.8
Change Period (Y+Rc), s	7.5	7.5	7.0	7.0	7.5	7.5	7.0	7.0
Max Green Setting (Gmax), s	20.5	42.5	22.0	41.0	20.5	42.5	20.0	43.0
Max Q Clear Time (g_c+I1), s	15.1	39.8	24.0	23.4	21.3	11.0	8.5	13.2
Green Ext Time (p_c), s	0.1	1.2	0.0	3.0	0.0	2.2	0.1	2.0

Intersection Summary	
HCM 6th Ctrl Delay	120.4
HCM 6th LOS	F



Movement	EBT	EBR	WBL	WBT	NBL	NBR
Lane Configurations	+++	j*		+++	↰	↱
Traffic Volume (veh/h)	777	35	631	740	66	475
Future Volume (veh/h)	777	35	631	740	66	475
Initial Q (Qb), veh	0	0	0	0	0	0
Ped-Bike Adj(A_pbT)		1.00	1.00		1.00	1.00
Parking Bus, Adj	1.00	1.00	1.00	1.00	1.00	1.00
Work Zone On Approach	No			No	No	
Adj Sat Flow, veh/h/ln	1900	1900	1900	1900	1900	1900
Adj Flow Rate, veh/h	863	0	701	822	73	528
Peak Hour Factor	0.90	0.90	0.90	0.90	0.90	0.90
Percent Heavy Veh, %	0	0	0	0	0	0
Cap, veh/h	1286		322	2611	637	567
Arrive On Green	0.25	0.00	0.36	1.00	0.35	0.35
Sat Flow, veh/h	5358	1610	1810	5358	1810	1610
Grp Volume(v), veh/h	863	0	701	822	73	528
Grp Sat Flow(s),veh/h/ln	1729	1610	1810	1729	1810	1610
Q Serve(g_s), s	13.5	0.0	16.0	0.0	2.5	28.4
Cycle Q Clear(g_c), s	13.5	0.0	16.0	0.0	2.5	28.4
Prop In Lane		1.00	1.00		1.00	1.00
Lane Grp Cap(c), veh/h	1286		322	2611	637	567
V/C Ratio(X)	0.67		2.18	0.31	0.11	0.93
Avail Cap(c_a), veh/h	1960		322	3285	637	567
HCM Platoon Ratio	1.00	1.00	2.00	2.00	1.00	1.00
Upstream Filter(I)	0.74	0.00	0.86	0.86	1.00	1.00
Uniform Delay (d), s/veh	30.5	0.0	29.0	0.0	19.7	28.1
Incr Delay (d2), s/veh	0.5	0.0	539.3	0.1	0.4	24.1
Initial Q Delay(d3),s/veh	0.0	0.0	0.0	0.0	0.0	0.0
%ile BackOfQ(50%),veh/ln	5.6	0.0	53.1	0.0	1.0	13.6
Unsig. Movement Delay, s/veh						
LnGrp Delay(d),s/veh	31.1	0.0	568.3	0.1	20.0	52.2
LnGrp LOS	C		F	A	C	D
Approach Vol, veh/h	863			1523	601	
Approach Delay, s/veh	31.1			261.6	48.3	
Approach LOS	C			F	D	

Timer - Assigned Phs	2	3	4		8
Phs Duration (G+Y+Rc), s	37.7	23.0	29.3		52.3
Change Period (Y+Rc), s	6.0	7.0	7.0		7.0
Max Green Setting (Gmax), s	20.0	16.0	34.0		57.0
Max Q Clear Time (g_c+I1), s	30.4	18.0	15.5		2.0
Green Ext Time (p_c), s	0.0	0.0	6.8		7.3

Intersection Summary	
HCM 6th Ctrl Delay	152.1
HCM 6th LOS	F

Notes

Unsignalized Delay for [EBR] is excluded from calculations of the approach delay and intersection delay.



Movement	EBT	EBR	WBL	WBT	NBL	NBR
Lane Configurations	fff	↱	*1	W	W	↱
Traffic Volume (veh/h)	1207	45	88	1203	168	358
Future Volume (veh/h)	1207	45	88	1203	168	358
Initial Q (Qb), veh	0	0	0	0	0	0
Ped-Bike Adj(A_pbT)		1.00	1.00		1.00	1.00
Parking Bus, Adj	1.00	1.00	1.00	1.00	1.00	1.00
Work Zone On Approach	No			No	No	
Adj Sat Flow, veh/h/ln	1900	1900	1900	1900	1900	1900
Adj Flow Rate, veh/h	1356	0	99	1352	189	402
Peak Hour Factor	0.89	0.89	0.89	0.89	0.89	0.89
Percent Heavy Veh, %	0	0	0	0	0	0
Cap, veh/h	1548		147	2374	740	1317
Arrive On Green	0.20	0.00	0.08	0.46	0.41	0.41
Sat Flow, veh/h	5358	1610	1810	5358	1810	3220
Grp Volume(v), veh/h	1356	0	99	1352	189	402
Grp Sat Flow(s),veh/h/ln	1729	1610	1810	1729	1810	1610
Q Serve(g_s), s	22.8	0.0	4.8	17.2	6.2	7.6
Cycle Q Clear(g_c), s	22.8	0.0	4.8	17.2	6.2	7.6
Prop In Lane		1.00	1.00		1.00	1.00
Lane Grp Cap(c), veh/h	1548		147	2374	740	1317
V/C Ratio(X)	0.88		0.67	0.57	0.26	0.31
Avail Cap(c_a), veh/h	1585		452	3285	740	1317
HCM Platoon Ratio	0.67	0.67	1.00	1.00	1.00	1.00
Upstream Filter(I)	0.72	0.00	1.00	1.00	1.00	1.00
Uniform Delay (d), s/veh	34.4	0.0	40.2	17.9	17.6	18.0
Incr Delay (d2), s/veh	4.3	0.0	2.0	0.3	0.8	0.6
Initial Q Delay(d3),s/veh	0.0	0.0	0.0	0.0	0.0	0.0
%ile BackOfQ(50%),veh/ln	10.2	0.0	2.1	6.0	2.7	2.6
Unsig. Movement Delay, s/veh						
LnGrp Delay(d),s/veh	38.7	0.0	42.2	18.2	18.4	18.6
LnGrp LOS	D		D	B	B	B
Approach Vol, veh/h	1356			1451	591	
Approach Delay, s/veh	38.7			19.8	18.5	
Approach LOS	D			B	B	

Timer - Assigned Phs	2	3	4		8
Phs Duration (G+Y+Rc), s	41.8	14.3	33.9		48.2
Change Period (Y+Rc), s	5.0	7.0	7.0		7.0
Max Green Setting (Gmax), s	21.0	22.5	27.5		57.0
Max Q Clear Time (g_c+I1), s	9.6	6.8	24.8		19.2
Green Ext Time (p_c), s	1.4	0.1	2.0		13.6

Intersection Summary	
HCM 6th Ctrl Delay	27.1
HCM 6th LOS	C

Notes

User approved volume balancing among the lanes for turning movement.
User approved ignoring U-Turning movement.
Unsignalized Delay for [EBR] is excluded from calculations of the approach delay and intersection delay.

Intersection	
Int Delay, s/veh	0.1

Movement	EBL	EBR	NBL	NBT	SBT	SBR
Lane Configurations		¡*		f+f	+++	¡*
Traffic Vol, veh/h	0	16	0	951	1226	65
Future Vol, veh/h	0	16	0	951	1226	65
Conflicting Peds, #/hr	0	0	0	0	0	0
Sign Control	Stop	Stop	Free	Free	Free	Free
RT Channelized	-	None	-	None	-	None
Storage Length	-	0	-	-	-	175
Veh in Median Storage, #	0	-	-	0	0	-
Grade, %	0	-	-	0	0	-
Peak Hour Factor	97	97	97	97	97	97
Heavy Vehicles, %	0	0	0	0	0	0
Mvmt Flow	0	16	0	980	1264	67

Major/Minor	Minor2		Major1		Major2	
Conflicting Flow All	-	632	-	0	-	0
Stage 1	-	-	-	-	-	-
Stage 2	-	-	-	-	-	-
Critical Hdwy	-	7.1	-	-	-	-
Critical Hdwy Stg 1	-	-	-	-	-	-
Critical Hdwy Stg 2	-	-	-	-	-	-
Follow-up Hdwy	-	3.9	-	-	-	-
Pot Cap-1 Maneuver	0	367	0	-	-	-
Stage 1	0	-	0	-	-	-
Stage 2	0	-	0	-	-	-
Platoon blocked, %				-	-	-
Mov Cap-1 Maneuver	-	367	-	-	-	-
Mov Cap-2 Maneuver	-	-	-	-	-	-
Stage 1	-	-	-	-	-	-
Stage 2	-	-	-	-	-	-

Approach	EB	NB	SB
HCM Control Delay, s	15.3	0	0
HCM LOS	C		

Minor Lane/Major Mvmt	NBT	EBLn1	SBT	SBR
Capacity (veh/h)	-	367	-	-
HCM Lane V/C Ratio	-	0.045	-	-
HCM Control Delay (s)	-	15.3	-	-
HCM Lane LOS	-	C	-	-
HCM 95th %tile Q(veh)	-	0.1	-	-

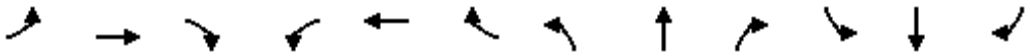

Movement	EBL	EBT	EBR	WBL	WBT	WBR	NBL	NBT	NBR	SBL	SBT	SBR
Lane Configurations	*i	T*		*i	T*		*i	++T*		*i	f+'b	
Traffic Volume (veh/h)	151	0	54	12	0	12	107	788	42	20	1209	12
Future Volume (veh/h)	151	0	54	12	0	12	107	788	42	20	1209	12
Initial Q (Qb), veh	0	0	0	0	0	0	0	0	0	0	0	0
Ped-Bike Adj(A_pbT)	1.00		1.00	1.00		1.00	1.00		1.00	1.00		0.98
Parking Bus, Adj	1.00	1.00	1.00	1.00	1.00	1.00	1.00	1.00	1.00	1.00	1.00	1.00
Work Zone On Approach		No			No			No			No	
Adj Sat Flow, veh/h/ln	1900	1900	1900	1900	1900	1900	1900	1900	1900	1900	1900	1900
Adj Flow Rate, veh/h	161	0	57	13	0	13	114	838	45	21	1286	13
Peak Hour Factor	0.94	0.94	0.94	0.94	0.94	0.94	0.94	0.94	0.94	0.94	0.94	0.94
Percent Heavy Veh, %	0	0	0	0	0	0	0	0	0	0	0	0
Cap, veh/h	271	0	240	230	0	240	144	3401	182	39	3265	33
Arrive On Green	0.15	0.00	0.15	0.15	0.00	0.15	0.08	0.67	0.67	0.02	0.62	0.62
Sat Flow, veh/h	1423	0	1610	1368	0	1610	1810	5040	270	1810	5293	54
Grp Volume(v), veh/h	161	0	57	13	0	13	114	574	309	21	840	459
Grp Sat Flow(s),veh/h/ln	1423	0	1610	1368	0	1610	1810	1729	1851	1810	1729	1889
Q Serve(g_s), s	11.5	0.0	3.3	0.9	0.0	0.7	6.5	6.8	6.8	1.2	12.9	12.9
Cycle Q Clear(g_c), s	12.2	0.0	3.3	4.2	0.0	0.7	6.5	6.8	6.8	1.2	12.9	12.9
Prop In Lane	1.00		1.00	1.00		1.00	1.00		0.15	1.00		0.03
Lane Grp Cap(c), veh/h	271	0	240	230	0	240	144	2334	1249	39	2133	1165
V/C Ratio(X)	0.59	0.00	0.24	0.06	0.00	0.05	0.79	0.25	0.25	0.53	0.39	0.39
Avail Cap(c_a), veh/h	476	0	472	427	0	472	224	2334	1249	224	2133	1165
HCM Platoon Ratio	1.00	1.00	1.00	1.00	1.00	1.00	1.00	1.00	1.00	1.00	1.00	1.00
Upstream Filter(I)	1.00	0.00	1.00	1.00	0.00	1.00	1.00	1.00	1.00	1.00	1.00	1.00
Uniform Delay (d), s/veh	43.6	0.0	39.4	41.2	0.0	38.3	47.4	6.7	6.7	50.8	10.2	10.2
Incr Delay (d2), s/veh	4.4	0.0	1.1	0.2	0.0	0.2	18.4	0.3	0.5	21.7	0.5	1.0
Initial Q Delay(d3),s/veh	0.0	0.0	0.0	0.0	0.0	0.0	0.0	0.0	0.0	0.0	0.0	0.0
%ile BackOfQ(50%),veh/ln	4.4	0.0	1.4	0.3	0.0	0.3	3.5	2.0	2.3	0.8	4.3	4.8
Unsig. Movement Delay, s/veh												
LnGrp Delay(d),s/veh	48.0	0.0	40.5	41.5	0.0	38.5	65.9	6.9	7.1	72.6	10.7	11.2
LnGrp LOS	D	A	D	D	A	D	E	A	A	E	B	B
Approach Vol, veh/h		218			26			997			1320	
Approach Delay, s/veh		46.0			40.0			13.7			11.9	
Approach LOS		D			D			B			B	

Timer - Assigned Phs	1	2		4	5	6		8				
Phs Duration (G+Y+Rc), s	6.3	76.9		21.9	12.4	70.8		21.9				
Change Period (Y+Rc), s	4.0	* 6		6.2	4.0	* 6		6.2				
Max Green Setting (Gmax), s	13.0	* 45		30.8	13.0	* 45		30.8				
Max Q Clear Time (g_c+I1), s	3.2	8.8		14.2	8.5	14.9		6.2				
Green Ext Time (p_c), s	0.0	11.8		1.4	0.2	17.1		0.1				

Intersection Summary		
HCM 6th Ctrl Delay		15.8
HCM 6th LOS		B

Notes

* HCM 6th computational engine requires equal clearance times for the phases crossing the barrier.



Movement	EBT	EBR	WBL	WBT	NBL	NBR
Lane Configurations	++1*					
Traffic Volume (veh/h)	1647	226	57	946	280	101
Future Volume (veh/h)	1647	226	57	946	280	101
Initial Q (Qb), veh	0	0	0	0	0	0
Ped-Bike Adj(A_pbT)		1.00	1.00		1.00	1.00
Parking Bus, Adj	1.00	1.00	1.00	1.00	1.00	1.00
Work Zone On Approach	No			No	No	
Adj Sat Flow, veh/h/ln	1900	1900	1900	1900	1900	1900
Adj Flow Rate, veh/h	1716	235	59	985	292	105
Peak Hour Factor	0.96	0.96	0.96	0.96	0.96	0.96
Percent Heavy Veh, %	0	0	0	0	0	0
Cap, veh/h	1511	206	96	2303	1537	790
Arrive On Green	0.33	0.33	0.05	0.44	0.44	0.44
Sat Flow, veh/h	4787	629	1810	5358	3510	1610
Grp Volume(v), veh/h	1283	668	59	985	292	105
Grp Sat Flow(s),veh/h/ln	1729	1787	1810	1729	1755	1610
Q Serve(g_s), s	36.0	36.0	3.5	14.3	5.6	3.9
Cycle Q Clear(g_c), s	36.0	36.0	3.5	14.3	5.6	3.9
Prop In Lane		0.35	1.00		1.00	1.00
Lane Grp Cap(c), veh/h	1132	585	96	2303	1537	790
V/C Ratio(X)	1.13	1.14	0.61	0.43	0.19	0.13
Avail Cap(c_a), veh/h	1132	585	313	2924	1537	790
HCM Platoon Ratio	1.00	1.00	1.00	1.00	1.00	1.00
Upstream Filter(I)	1.00	1.00	0.85	0.85	1.00	1.00
Uniform Delay (d), s/veh	37.0	37.0	51.0	21.0	19.0	15.2
Incr Delay (d2), s/veh	71.6	82.9	4.0	0.1	0.3	0.3
Initial Q Delay(d3),s/veh	0.0	0.0	0.0	0.0	0.0	0.0
%ile BackOfQ(50%),veh/ln	25.4	28.0	1.6	5.4	2.4	1.4
Unsig. Movement Delay, s/veh						
LnGrp Delay(d),s/veh	108.6	119.9	54.9	21.1	19.2	15.6
LnGrp LOS	F	F	D	C	B	B
Approach Vol, veh/h	1951			1044	397	
Approach Delay, s/veh	112.5			23.0	18.3	
Approach LOS	F			C	B	

Timer - Assigned Phs		2	3	4		8
Phs Duration (G+Y+Rc), s		54.2	12.8	43.0		55.8
Change Period (Y+Rc), s		6.0	7.0	7.0		7.0
Max Green Setting (Gmax), s		35.0	19.0	36.0		62.0
Max Q Clear Time (g_c+I1), s		7.6	5.5	38.0		16.3
Green Ext Time (p_c), s		1.1	0.1	0.0		7.3

Intersection Summary	
HCM 6th Ctrl Delay	73.9
HCM 6th LOS	E



Movement	EBL	EBT	EBR	WBL	WBT	WBR	NBL	NBT	NBR	SBL	SBT	SBR
Lane Configurations				*i	+++	i*i*	*i*i	++T*				
Traffic Volume (veh/h)	903	810	35	146	516	772	13	98	57	637	295	474
Future Volume (veh/h)	903	810	35	146	516	772	13	98	57	637	295	474
Initial Q (Qb), veh	0	0	0	0	0	0	0	0	0	0	0	0
Ped-Bike Adj(A_pbT)	1.00		1.00	1.00		1.00	1.00		1.00	1.00		1.00
Parking Bus, Adj	1.00	1.00	1.00	1.00	1.00	1.00	1.00	1.00	1.00	1.00	1.00	1.00
Work Zone On Approach		No			No			No			No	
Adj Sat Flow, veh/h/ln	1900	1900	1900	1900	1900	1900	1900	1900	1900	1900	1900	1900
Adj Flow Rate, veh/h	951	853	37	154	543	813	14	103	60	671	311	499
Peak Hour Factor	0.95	0.95	0.95	0.95	0.95	0.95	0.95	0.95	0.95	0.95	0.95	0.95
Percent Heavy Veh, %	0	0	0	0	0	0	0	0	0	0	0	0
Cap, veh/h	453	1576	68	176	1439	786	103	948	441	464	1362	607
Arrive On Green	0.13	0.31	0.31	0.10	0.28	0.28	0.03	0.27	0.27	0.13	0.38	0.38
Sat Flow, veh/h	3510	5098	221	1810	5187	2834	3510	3458	1610	3510	3610	1610
Grp Volume(v), veh/h	951	578	312	154	543	813	14	103	60	671	311	499
Grp Sat Flow(s),veh/h/ln	1755	1729	1860	1810	1729	1417	1755	1729	1610	1755	1805	1610
Q Serve(g_s), s	20.0	21.5	21.6	13.0	13.1	43.0	0.6	3.5	4.4	20.5	9.1	43.3
Cycle Q Clear(g_c), s	20.0	21.5	21.6	13.0	13.1	43.0	0.6	3.5	4.4	20.5	9.1	43.3
Prop In Lane	1.00		0.12	1.00		1.00	1.00		1.00	1.00		1.00
Lane Grp Cap(c), veh/h	453	1069	575	176	1439	786	103	948	441	464	1362	607
V/C Ratio(X)	2.10	0.54	0.54	0.88	0.38	1.03	0.14	0.11	0.14	1.45	0.23	0.82
Avail Cap(c_a), veh/h	453	1069	575	233	1439	786	464	948	441	464	1362	607
HCM Platoon Ratio	1.00	1.00	1.00	1.00	1.00	1.00	1.00	1.00	1.00	1.00	1.00	1.00
Upstream Filter(I)	0.38	0.38	0.38	0.91	0.91	0.91	1.00	1.00	1.00	1.00	1.00	1.00
Uniform Delay (d), s/veh	67.5	44.4	44.4	69.0	45.2	56.0	73.3	42.1	42.4	67.3	32.9	43.6
Incr Delay (d2), s/veh	497.6	0.2	0.3	18.4	0.1	39.7	0.2	0.2	0.6	212.2	0.4	11.9
Initial Q Delay(d3),s/veh	0.0	0.0	0.0	0.0	0.0	0.0	0.0	0.0	0.0	0.0	0.0	0.0
%ile BackOfQ(50%),veh/ln	40.1	9.0	9.8	6.8	5.5	19.2	0.3	1.5	1.8	22.7	4.0	18.7
Unsig. Movement Delay, s/veh												
LnGrp Delay(d),s/veh	565.1	44.6	44.8	87.4	45.3	95.7	73.6	42.3	43.0	279.5	33.3	55.4
LnGrp LOS	F	D	D	F	D	F	E	D	D	F	C	E
Approach Vol, veh/h		1841			1510			177			1481	
Approach Delay, s/veh		313.5			76.8			45.0			152.3	
Approach LOS		F			E			D			F	

Timer - Assigned Phs	1	2	3	4	5	6	7	8
Phs Duration (G+Y+Rc), s	12.0	66.0	27.0	50.0	28.0	50.0	22.1	54.9
Change Period (Y+Rc), s	7.5	7.5	7.0	7.0	7.5	7.5	7.0	7.0
Max Green Setting (Gmax), s	20.5	42.5	20.0	43.0	20.5	42.5	20.0	43.0
Max Q Clear Time (g_c+I1), s	12.6	45.3	22.0	45.0	22.5	6.4	15.0	23.6
Green Ext Time (p_c), s	0.0	0.0	0.0	0.0	0.0	0.8	0.1	4.0

Intersection Summary	
HCM 6th Ctrl Delay	185.0
HCM 6th LOS	F



Movement	EBT	EBR	WBL	WBT	NBL	NBR
Lane Configurations	+++	j*		+++	↰	↱
Traffic Volume (veh/h)	1491	12	291	1310	124	225
Future Volume (veh/h)	1491	12	291	1310	124	225
Initial Q (Qb), veh	0	0	0	0	0	0
Ped-Bike Adj(A_pbT)		1.00	1.00		1.00	1.00
Parking Bus, Adj	1.00	1.00	1.00	1.00	1.00	1.00
Work Zone On Approach	No			No	No	
Adj Sat Flow, veh/h/ln	1900	1900	1900	1900	1900	1900
Adj Flow Rate, veh/h	1569	0	306	1379	131	237
Peak Hour Factor	0.95	0.95	0.95	0.95	0.95	0.95
Percent Heavy Veh, %	0	0	0	0	0	0
Cap, veh/h	1945		281	3156	447	398
Arrive On Green	0.38	0.00	0.10	0.41	0.25	0.25
Sat Flow, veh/h	5358	1610	1810	5358	1810	1610
Grp Volume(v), veh/h	1569	0	306	1379	131	237
Grp Sat Flow(s),veh/h/ln	1729	1610	1810	1729	1810	1610
Q Serve(g_s), s	24.4	0.0	14.0	17.2	5.3	11.7
Cycle Q Clear(g_c), s	24.4	0.0	14.0	17.2	5.3	11.7
Prop In Lane		1.00	1.00		1.00	1.00
Lane Grp Cap(c), veh/h	1945		281	3156	447	398
V/C Ratio(X)	0.81		1.09	0.44	0.29	0.60
Avail Cap(c_a), veh/h	2075		281	3285	447	398
HCM Platoon Ratio	1.00	1.00	0.67	0.67	1.00	1.00
Upstream Filter(I)	0.43	0.00	0.85	0.85	1.00	1.00
Uniform Delay (d), s/veh	25.2	0.0	40.3	15.5	27.5	29.9
Incr Delay (d2), s/veh	1.0	0.0	74.8	0.1	1.7	6.4
Initial Q Delay(d3),s/veh	0.0	0.0	0.0	0.0	0.0	0.0
%ile BackOfQ(50%),veh/ln	9.7	0.0	12.0	6.9	2.3	4.9
Unsig. Movement Delay, s/veh						
LnGrp Delay(d),s/veh	26.2	0.0	115.1	15.6	29.1	36.3
LnGrp LOS	C		F	B	C	D
Approach Vol, veh/h	1569			1685	368	
Approach Delay, s/veh	26.2			33.7	33.8	
Approach LOS	C			C	C	

Timer - Assigned Phs	2	3	4		8
Phs Duration (G+Y+Rc), s	28.2	21.0	40.8		61.8
Change Period (Y+Rc), s	6.0	7.0	7.0		7.0
Max Green Setting (Gmax), s	20.0	14.0	36.0		57.0
Max Q Clear Time (g_c+I1), s	13.7	16.0	26.4		19.2
Green Ext Time (p_c), s	0.5	0.0	7.4		14.0

Intersection Summary	
HCM 6th Ctrl Delay	30.5
HCM 6th LOS	C

Notes

Unsignalized Delay for [EBR] is excluded from calculations of the approach delay and intersection delay.



Movement	EBT	EBR	WBL	WBT	NBL	NBR
Lane Configurations	fff	r	*1 W	W		r
Traffic Volume (veh/h)	1687	29	62	1523	78	94
Future Volume (veh/h)	1687	29	62	1523	78	94
Initial Q (Qb), veh	0	0	0	0	0	0
Ped-Bike Adj(A_pbT)		1.00	1.00		1.00	1.00
Parking Bus, Adj	1.00	1.00	1.00	1.00	1.00	1.00
Work Zone On Approach	No			No	No	
Adj Sat Flow, veh/h/ln	1900	1900	1900	1900	1900	1900
Adj Flow Rate, veh/h	1776	0	65	1603	60	122
Peak Hour Factor	0.95	0.95	0.95	0.95	0.95	0.95
Percent Heavy Veh, %	0	0	0	0	0	0
Cap, veh/h	1729		129	2503	695	1237
Arrive On Green	0.67	0.00	0.07	0.48	0.38	0.38
Sat Flow, veh/h	5358	1610	1810	5358	1810	3220
Grp Volume(v), veh/h	1776	0	65	1603	60	122
Grp Sat Flow(s),veh/h/ln	1729	1610	1810	1729	1810	1610
Q Serve(g_s), s	30.0	0.0	3.1	20.8	1.9	2.2
Cycle Q Clear(g_c), s	30.0	0.0	3.1	20.8	1.9	2.2
Prop In Lane		1.00	1.00		1.00	1.00
Lane Grp Cap(c), veh/h	1729		129	2503	695	1237
V/C Ratio(X)	1.03		0.50	0.64	0.09	0.10
Avail Cap(c_a), veh/h	1729		402	3285	695	1237
HCM Platoon Ratio	2.00	2.00	1.00	1.00	1.00	1.00
Upstream Filter(I)	0.56	0.00	1.00	1.00	1.00	1.00
Uniform Delay (d), s/veh	15.0	0.0	40.3	17.4	17.7	17.7
Incr Delay (d2), s/veh	23.6	0.0	1.1	0.3	0.2	0.2
Initial Q Delay(d3),s/veh	0.0	0.0	0.0	0.0	0.0	0.0
%ile BackOfQ(50%),veh/ln	8.2	0.0	1.3	7.2	0.8	0.8
Unsig. Movement Delay, s/veh						
LnGrp Delay(d),s/veh	38.6	0.0	41.4	17.8	17.9	17.9
LnGrp LOS	F		D	B	B	B
Approach Vol, veh/h	1776			1668	182	
Approach Delay, s/veh	38.6			18.7	17.9	
Approach LOS	D			B	B	

Timer - Assigned Phs	2	3	4		8
Phs Duration (G+Y+Rc), s	39.6	13.4	37.0		50.4
Change Period (Y+Rc), s	5.0	7.0	7.0		7.0
Max Green Setting (Gmax), s	21.0	20.0	30.0		57.0
Max Q Clear Time (g_c+I1), s	4.2	5.1	32.0		22.8
Green Ext Time (p_c), s	0.4	0.0	0.0		16.6

Intersection Summary	
HCM 6th Ctrl Delay	28.4
HCM 6th LOS	C

Notes

User approved volume balancing among the lanes for turning movement.
User approved ignoring U-Turning movement.
Unsignalized Delay for [EBR] is excluded from calculations of the approach delay and intersection delay.

Intersection	
Int Delay, s/veh	0.2

Movement	EBL	EBR	NBL	NBT	SBT	SBR
Lane Configurations		¡*		f+f	+++	¡*
Traffic Vol, veh/h	0	43	0	2063	1045	29
Future Vol, veh/h	0	43	0	2063	1045	29
Conflicting Peds, #/hr	0	0	0	0	0	0
Sign Control	Stop	Stop	Free	Free	Free	Free
RT Channelized	-	None	-	None	-	None
Storage Length	-	0	-	-	-	175
Veh in Median Storage, #	0	-	-	0	0	-
Grade, %	0	-	-	0	0	-
Peak Hour Factor	95	95	95	95	95	95
Heavy Vehicles, %	0	0	0	0	0	0
Mvmt Flow	0	45	0	2172	1100	31

Major/Minor	Minor2		Major1		Major2	
Conflicting Flow All	-	550	-	0	-	0
Stage 1	-	-	-	-	-	-
Stage 2	-	-	-	-	-	-
Critical Hdwy	-	7.1	-	-	-	-
Critical Hdwy Stg 1	-	-	-	-	-	-
Critical Hdwy Stg 2	-	-	-	-	-	-
Follow-up Hdwy	-	3.9	-	-	-	-
Pot Cap-1 Maneuver	0	414	0	-	-	-
Stage 1	0	-	0	-	-	-
Stage 2	0	-	0	-	-	-
Platoon blocked, %				-	-	-
Mov Cap-1 Maneuver	-	414	-	-	-	-
Mov Cap-2 Maneuver	-	-	-	-	-	-
Stage 1	-	-	-	-	-	-
Stage 2	-	-	-	-	-	-

Approach	EB	NB	SB
HCM Control Delay, s	14.8	0	0
HCM LOS	B		

Minor Lane/Major Mvmt	NBT	EBLn1	SBT	SBR
Capacity (veh/h)	-	414	-	-
HCM Lane V/C Ratio	-	0.109	-	-
HCM Control Delay (s)	-	14.8	-	-
HCM Lane LOS	-	B	-	-
HCM 95th %tile Q(veh)	-	0.4	-	-

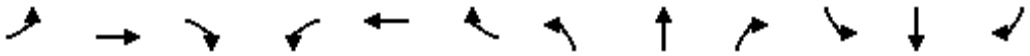

Movement	EBL	EBT	EBR	WBL	WBT	WBR	NBL	NBT	NBR	SBL	SBT	SBR
Lane Configurations	*i	T*		*i	T*		*i	++T*		*i	f+'b	
Traffic Volume (veh/h)	189	2	83	27	8	35	177	1839	8	19	1035	34
Future Volume (veh/h)	189	2	83	27	8	35	177	1839	8	19	1035	34
Initial Q (Qb), veh	0	0	0	0	0	0	0	0	0	0	0	0
Ped-Bike Adj(A_pbT)	1.00		1.00	1.00		1.00	1.00		0.98	1.00		1.00
Parking Bus, Adj	1.00	1.00	1.00	1.00	1.00	1.00	1.00	1.00	1.00	1.00	1.00	1.00
Work Zone On Approach		No			No			No			No	
Adj Sat Flow, veh/h/ln	1900	1900	1900	1900	1900	1900	1900	1900	1900	1900	1900	1900
Adj Flow Rate, veh/h	199	2	87	28	8	37	186	1936	8	20	1089	36
Peak Hour Factor	0.95	0.95	0.95	0.95	0.95	0.95	0.95	0.95	0.95	0.95	0.95	0.95
Percent Heavy Veh, %	0	0	0	0	0	0	0	0	0	0	0	0
Cap, veh/h	305	7	309	263	58	266	197	3392	14	38	2825	93
Arrive On Green	0.20	0.20	0.20	0.20	0.20	0.20	0.11	0.64	0.64	0.02	0.55	0.55
Sat Flow, veh/h	1383	36	1579	1329	294	1361	1810	5331	22	1810	5156	170
Grp Volume(v), veh/h	199	0	89	28	0	45	186	1256	688	20	730	395
Grp Sat Flow(s),veh/h/ln	1383	0	1616	1329	0	1655	1810	1729	1895	1810	1729	1868
Q Serve(g_s), s	15.3	0.0	5.2	2.0	0.0	2.5	11.2	22.8	22.8	1.2	13.3	13.3
Cycle Q Clear(g_c), s	17.8	0.0	5.2	7.2	0.0	2.5	11.2	22.8	22.8	1.2	13.3	13.3
Prop In Lane	1.00		0.98	1.00		0.82	1.00		0.01	1.00		0.09
Lane Grp Cap(c), veh/h	305	0	316	263	0	324	197	2200	1206	38	1895	1024
V/C Ratio(X)	0.65	0.00	0.28	0.11	0.00	0.14	0.94	0.57	0.57	0.53	0.39	0.39
Avail Cap(c_a), veh/h	434	0	467	387	0	478	197	2200	1206	197	1895	1024
HCM Platoon Ratio	1.00	1.00	1.00	1.00	1.00	1.00	1.00	1.00	1.00	1.00	1.00	1.00
Upstream Filter(I)	1.00	0.00	1.00	1.00	0.00	1.00	1.00	1.00	1.00	1.00	1.00	1.00
Uniform Delay (d), s/veh	43.9	0.0	37.7	40.7	0.0	36.6	48.7	11.4	11.4	53.3	14.2	14.3
Incr Delay (d2), s/veh	5.0	0.0	1.0	0.4	0.0	0.4	48.6	1.1	2.0	22.7	0.6	1.1
Initial Q Delay(d3),s/veh	0.0	0.0	0.0	0.0	0.0	0.0	0.0	0.0	0.0	0.0	0.0	0.0
%ile BackOfQ(50%),veh/ln	5.7	0.0	2.2	0.7	0.0	1.1	7.5	7.6	8.6	0.8	4.8	5.3
Unsig. Movement Delay, s/veh												
LnGrp Delay(d),s/veh	48.9	0.0	38.7	41.1	0.0	37.0	97.3	12.5	13.4	76.0	14.8	15.4
LnGrp LOS	D	A	D	D	A	D	F	B	B	E	B	B
Approach Vol, veh/h		288			73			2130			1145	
Approach Delay, s/veh		45.7			38.6			20.2			16.1	
Approach LOS		D			D			C			B	

Timer - Assigned Phs	1	2		4	5	6		8				
Phs Duration (G+Y+Rc), s	6.3	76.0		27.7	16.0	66.3		27.7				
Change Period (Y+Rc), s	4.0	* 6		6.2	4.0	* 6		6.2				
Max Green Setting (Gmax), s	12.0	* 50		31.8	12.0	* 50		31.8				
Max Q Clear Time (g_c+I1), s	3.2	24.8		19.8	13.2	15.3		9.2				
Green Ext Time (p_c), s	0.0	21.3		1.8	0.0	15.7		0.5				

Intersection Summary		
HCM 6th Ctrl Delay		21.3
HCM 6th LOS		C

Notes

* HCM 6th computational engine requires equal clearance times for the phases crossing the barrier.

Movement	EBL	EBT	EBR	WBL	WBT	WBR	NBL	NBT	NBR	SBL	SBT	SBR
Lane Configurations					+++	¡*¡*	*¡*¡	++1*				
Traffic Volume (veh/h)	790	775	23	84	474	583	12	81	51	477	158	399
Future Volume (veh/h)	790	775	23	84	474	583	12	81	51	477	158	399
Initial Q (Qb), veh	0	0	0	0	0	0	0	0	0	0	0	0
Ped-Bike Adj(A_pbT)	1.00		1.00	1.00		1.00	1.00		1.00	1.00		1.00
Parking Bus, Adj	1.00	1.00	1.00	1.00	1.00	1.00	1.00	1.00	1.00	1.00	1.00	1.00
Work Zone On Approach		No			No			No			No	
Adj Sat Flow, veh/h/ln	1900	1900	1900	1900	1900	1900	1900	1900	1900	1900	1900	1900
Adj Flow Rate, veh/h	840	824	24	89	504	620	13	86	54	507	168	424
Peak Hour Factor	0.94	0.94	0.94	0.94	0.94	0.94	0.94	0.94	0.94	0.94	0.94	0.94
Percent Heavy Veh, %	0	0	0	0	0	0	0	0	0	0	0	0
Cap, veh/h	861	2046	59	114	1104	603	97	674	314	562	1181	527
Arrive On Green	0.25	0.39	0.39	0.06	0.21	0.21	0.03	0.19	0.19	0.16	0.33	0.33
Sat Flow, veh/h	3510	5180	151	1810	5187	2834	3510	3458	1610	3510	3610	1610
Grp Volume(v), veh/h	840	550	298	89	504	620	13	86	54	507	168	424
Grp Sat Flow(s),veh/h/ln	1755	1729	1873	1810	1729	1417	1755	1729	1610	1755	1805	1610
Q Serve(g_s), s	36.8	17.7	17.8	7.5	13.1	33.0	0.6	3.2	4.3	22.0	5.1	37.3
Cycle Q Clear(g_c), s	36.8	17.7	17.8	7.5	13.1	33.0	0.6	3.2	4.3	22.0	5.1	37.3
Prop In Lane	1.00		0.08	1.00		1.00	1.00		1.00	1.00		1.00
Lane Grp Cap(c), veh/h	861	1366	740	114	1104	603	97	674	314	562	1181	527
V/C Ratio(X)	0.98	0.40	0.40	0.78	0.46	1.03	0.13	0.13	0.17	0.90	0.14	0.80
Avail Cap(c_a), veh/h	861	1366	740	175	1104	603	226	674	314	872	1181	527
HCM Platoon Ratio	1.00	1.00	1.00	1.00	1.00	1.00	1.00	1.00	1.00	1.00	1.00	1.00
Upstream Filter(I)	0.52	0.52	0.52	0.93	0.93	0.93	1.00	1.00	1.00	1.00	1.00	1.00
Uniform Delay (d), s/veh	58.0	33.7	33.7	71.5	53.2	61.0	73.5	51.5	52.0	63.9	36.8	47.6
Incr Delay (d2), s/veh	16.6	0.1	0.1	4.7	0.2	42.6	0.2	0.4	1.2	6.0	0.3	12.4
Initial Q Delay(d3),s/veh	0.0	0.0	0.0	0.0	0.0	0.0	0.0	0.0	0.0	0.0	0.0	0.0
%ile BackOfQ(50%),veh/ln	17.8	7.3	7.9	3.6	5.6	15.1	0.3	1.4	1.9	10.1	2.3	16.3
Unsig. Movement Delay, s/veh												
LnGrp Delay(d),s/veh	74.7	33.8	33.9	76.3	53.4	103.6	73.8	51.9	53.2	69.9	37.0	60.0
LnGrp LOS	E	C	C	E	D	F	E	D	D	E	D	E
Approach Vol, veh/h		1688			1213			153			1099	
Approach Delay, s/veh		54.2			80.7			54.2			61.1	
Approach LOS		D			F			D			E	

Timer - Assigned Phs	1	2	3	4	5	6	7	8
Phs Duration (G+Y+Rc), s	11.8	58.2	45.0	40.0	32.3	37.7	16.8	68.2
Change Period (Y+Rc), s	7.5	7.5	7.0	7.0	7.5	7.5	7.0	7.0
Max Green Setting (Gmax), s	10.0	45.0	38.0	33.0	38.5	16.5	15.0	56.0
Max Q Clear Time (g_c+I1), s	2.6	39.3	38.8	35.0	24.0	6.3	9.5	19.8
Green Ext Time (p_c), s	0.0	1.0	0.0	0.0	0.8	0.4	0.0	4.2

Intersection Summary	
HCM 6th Ctrl Delay	63.7
HCM 6th LOS	E

Movement	EBL	EBT	EBR	WBL	WBT	WBR	NBL	NBT	NBR	SBL	SBT	SBR
Lane Configurations					+++	¡*¡*	*¡*¡	++1*				
Traffic Volume (veh/h)	762	354	52	70	372	364	67	322	62	396	495	438
Future Volume (veh/h)	762	354	52	70	372	364	67	322	62	396	495	438
Initial Q (Qb), veh	0	0	0	0	0	0	0	0	0	0	0	0
Ped-Bike Adj(A_pbT)	1.00		1.00	1.00		1.00	1.00		1.00	1.00		1.00
Parking Bus, Adj	1.00	1.00	1.00	1.00	1.00	1.00	1.00	1.00	1.00	1.00	1.00	1.00
Work Zone On Approach		No			No			No			No	
Adj Sat Flow, veh/h/ln	1900	1900	1900	1900	1900	1900	1900	1900	1900	1900	1900	1900
Adj Flow Rate, veh/h	847	393	58	78	413	404	74	358	69	440	550	487
Peak Hour Factor	0.90	0.90	0.90	0.90	0.90	0.90	0.90	0.90	0.90	0.90	0.90	0.90
Percent Heavy Veh, %	0	0	0	0	0	0	0	0	0	0	0	0
Cap, veh/h	894	1606	232	113	822	449	217	1140	213	492	1220	544
Arrive On Green	0.25	0.35	0.35	0.06	0.16	0.16	0.06	0.26	0.26	0.14	0.34	0.34
Sat Flow, veh/h	3510	4579	660	1810	5187	2834	3510	4390	820	3510	3610	1609
Grp Volume(v), veh/h	847	295	156	78	413	404	74	280	147	440	550	487
Grp Sat Flow(s),veh/h/ln	1755	1729	1781	1810	1729	1417	1755	1729	1752	1755	1805	1609
Q Serve(g_s), s	36.7	9.4	9.7	6.5	11.3	21.7	3.1	10.1	10.5	19.1	18.4	44.5
Cycle Q Clear(g_c), s	36.7	9.4	9.7	6.5	11.3	21.7	3.1	10.1	10.5	19.1	18.4	44.5
Prop In Lane	1.00		0.37	1.00		1.00	1.00		0.47	1.00		1.00
Lane Grp Cap(c), veh/h	894	1213	625	113	822	449	217	898	455	492	1220	544
V/C Ratio(X)	0.95	0.24	0.25	0.69	0.50	0.90	0.34	0.31	0.32	0.89	0.45	0.90
Avail Cap(c_a), veh/h	951	1227	632	152	870	475	238	898	455	736	1220	544
HCM Platoon Ratio	1.00	1.00	1.00	1.00	1.00	1.00	1.00	1.00	1.00	1.00	1.00	1.00
Upstream Filter(I)	0.45	0.45	0.45	0.98	0.98	0.98	1.00	1.00	1.00	1.00	1.00	1.00
Uniform Delay (d), s/veh	56.8	35.7	35.8	71.2	59.6	64.0	69.7	46.2	46.4	65.5	40.1	48.7
Incr Delay (d2), s/veh	9.4	0.0	0.1	3.6	0.3	18.7	0.3	0.9	1.9	7.0	1.2	19.9
Initial Q Delay(d3),s/veh	0.0	0.0	0.0	0.0	0.0	0.0	0.0	0.0	0.0	0.0	0.0	0.0
%ile BackOfQ(50%),veh/ln	17.0	3.9	4.2	3.1	4.9	8.8	1.4	4.5	4.9	8.8	8.2	20.3
Unsig. Movement Delay, s/veh												
LnGrp Delay(d),s/veh	66.1	35.7	35.9	74.9	60.0	82.7	70.0	47.1	48.3	72.5	41.3	68.6
LnGrp LOS	E	D	D	E	E	F	E	D	D	E	D	E
Approach Vol, veh/h		1298			895			501			1477	
Approach Delay, s/veh		55.6			71.5			50.8			59.6	
Approach LOS		E			E			D			E	

Timer - Assigned Phs	1	2	3	4	5	6	7	8
Phs Duration (G+Y+Rc), s	17.1	59.9	46.5	31.5	29.2	47.7	16.7	61.4
Change Period (Y+Rc), s	7.5	7.5	7.0	7.0	7.5	7.5	7.0	7.0
Max Green Setting (Gmax), s	10.5	47.5	42.0	26.0	32.5	25.5	13.0	55.0
Max Q Clear Time (g_c+I1), s	5.1	46.5	38.7	23.7	21.1	12.5	8.5	11.7
Green Ext Time (p_c), s	0.0	0.5	0.7	0.9	0.6	1.7	0.0	2.1

Intersection Summary	
HCM 6th Ctrl Delay	59.9
HCM 6th LOS	E



Movement	EBT	EBR	WBL	WBT	NBL	NBR
Lane Configurations	+++	j*		+++	↰	↱
Traffic Volume (veh/h)	777	35	631	740	66	475
Future Volume (veh/h)	777	35	631	740	66	475
Initial Q (Qb), veh	0	0	0	0	0	0
Ped-Bike Adj(A_pbT)		1.00	1.00		1.00	1.00
Parking Bus, Adj	1.00	1.00	1.00	1.00	1.00	1.00
Work Zone On Approach	No			No	No	
Adj Sat Flow, veh/h/ln	1900	1900	1900	1900	1900	1900
Adj Flow Rate, veh/h	863	0	701	822	73	528
Peak Hour Factor	0.90	0.90	0.90	0.90	0.90	0.90
Percent Heavy Veh, %	0	0	0	0	0	0
Cap, veh/h	922		603	3055	483	429
Arrive On Green	0.18	0.00	0.67	1.00	0.27	0.27
Sat Flow, veh/h	5358	1610	1810	5358	1810	1610
Grp Volume(v), veh/h	863	0	701	822	73	528
Grp Sat Flow(s),veh/h/ln	1729	1610	1810	1729	1810	1610
Q Serve(g_s), s	14.8	0.0	30.0	0.0	2.8	24.0
Cycle Q Clear(g_c), s	14.8	0.0	30.0	0.0	2.8	24.0
Prop In Lane		1.00	1.00		1.00	1.00
Lane Grp Cap(c), veh/h	922		603	3055	483	429
V/C Ratio(X)	0.94		1.16	0.27	0.15	1.23
Avail Cap(c_a), veh/h	922		603	3055	483	429
HCM Platoon Ratio	1.00	1.00	2.00	2.00	1.00	1.00
Upstream Filter(I)	0.82	0.00	0.86	0.86	1.00	1.00
Uniform Delay (d), s/veh	36.5	0.0	15.0	0.0	25.2	33.0
Incr Delay (d2), s/veh	14.2	0.0	88.2	0.0	0.7	122.3
Initial Q Delay(d3),s/veh	0.0	0.0	0.0	0.0	0.0	0.0
%ile BackOfQ(50%),veh/ln	7.3	0.0	19.4	0.0	1.2	23.1
Unsig. Movement Delay, s/veh						
LnGrp Delay(d),s/veh	50.7	0.0	103.2	0.0	25.9	155.3
LnGrp LOS	D		F	A	C	F
Approach Vol, veh/h	863			1523	601	
Approach Delay, s/veh	50.7			47.5	139.6	
Approach LOS	D			D	F	

Timer - Assigned Phs	2	3	4		8
Phs Duration (G+Y+Rc), s	30.0	37.0	23.0		60.0
Change Period (Y+Rc), s	6.0	7.0	7.0		7.0
Max Green Setting (Gmax), s	24.0	30.0	16.0		53.0
Max Q Clear Time (g_c+I1), s	26.0	32.0	16.8		2.0
Green Ext Time (p_c), s	0.0	0.0	0.0		7.3

Intersection Summary	
HCM 6th Ctrl Delay	67.0
HCM 6th LOS	E

Notes

Unsignalized Delay for [EBR] is excluded from calculations of the approach delay and intersection delay.

Movement	EBL	EBT	EBR	WBL	WBT	WBR	NBL	NBT	NBR	SBL	SBT	SBR
Lane Configurations					+++	¡*¡*	*¡*¡	++1*				
Traffic Volume (veh/h)	903	810	35	146	516	772	13	98	57	637	295	474
Future Volume (veh/h)	903	810	35	146	516	772	13	98	57	637	295	474
Initial Q (Qb), veh	0	0	0	0	0	0	0	0	0	0	0	0
Ped-Bike Adj(A_pbT)	1.00		1.00	1.00		1.00	1.00		1.00	1.00		1.00
Parking Bus, Adj	1.00	1.00	1.00	1.00	1.00	1.00	1.00	1.00	1.00	1.00	1.00	1.00
Work Zone On Approach		No			No			No			No	
Adj Sat Flow, veh/h/ln	1900	1900	1900	1900	1900	1900	1900	1900	1900	1900	1900	1900
Adj Flow Rate, veh/h	951	853	37	154	543	813	14	103	60	671	311	499
Peak Hour Factor	0.95	0.95	0.95	0.95	0.95	0.95	0.95	0.95	0.95	0.95	0.95	0.95
Percent Heavy Veh, %	0	0	0	0	0	0	0	0	0	0	0	0
Cap, veh/h	838	1904	82	176	1205	658	103	472	220	722	1129	504
Arrive On Green	0.24	0.37	0.37	0.10	0.23	0.23	0.03	0.14	0.14	0.21	0.31	0.31
Sat Flow, veh/h	3510	5098	221	1810	5187	2834	3510	3458	1610	3510	3610	1610
Grp Volume(v), veh/h	951	578	312	154	543	813	14	103	60	671	311	499
Grp Sat Flow(s),veh/h/ln	1755	1729	1860	1810	1729	1417	1755	1729	1610	1755	1805	1610
Q Serve(g_s), s	37.0	19.5	19.6	13.0	13.9	36.0	0.6	4.1	5.2	29.1	10.0	47.8
Cycle Q Clear(g_c), s	37.0	19.5	19.6	13.0	13.9	36.0	0.6	4.1	5.2	29.1	10.0	47.8
Prop In Lane	1.00		0.12	1.00		1.00	1.00		1.00	1.00		1.00
Lane Grp Cap(c), veh/h	838	1291	695	176	1205	658	103	472	220	722	1129	504
V/C Ratio(X)	1.13	0.45	0.45	0.87	0.45	1.24	0.14	0.22	0.27	0.93	0.28	0.99
Avail Cap(c_a), veh/h	838	1291	695	292	1205	658	238	472	220	827	1129	504
HCM Platoon Ratio	1.00	1.00	1.00	1.00	1.00	1.00	1.00	1.00	1.00	1.00	1.00	1.00
Upstream Filter(I)	0.38	0.38	0.38	0.91	0.91	0.91	1.00	1.00	1.00	1.00	1.00	1.00
Uniform Delay (d), s/veh	59.0	36.5	36.6	69.0	51.0	59.5	73.3	59.6	60.0	60.5	40.1	53.0
Incr Delay (d2), s/veh	66.9	0.1	0.1	7.4	0.2	117.6	0.2	1.1	3.1	14.7	0.6	37.9
Initial Q Delay(d3),s/veh	0.0	0.0	0.0	0.0	0.0	0.0	0.0	0.0	0.0	0.0	0.0	0.0
%ile BackOfQ(50%),veh/ln	23.7	8.1	8.7	6.3	5.9	23.3	0.3	1.9	2.3	14.1	4.5	24.0
Unsig. Movement Delay, s/veh												
LnGrp Delay(d),s/veh	125.9	36.6	36.7	76.4	51.2	177.1	73.6	60.6	63.1	75.2	40.7	91.0
LnGrp LOS	F	D	D	E	D	F	E	E	E	E	D	F
Approach Vol, veh/h		1841			1510			177			1481	
Approach Delay, s/veh		82.8			121.6			62.5			73.3	
Approach LOS		F			F			E			E	

Timer - Assigned Phs	1	2	3	4	5	6	7	8
Phs Duration (G+Y+Rc), s	12.0	56.0	44.0	43.0	39.4	28.6	22.1	64.9
Change Period (Y+Rc), s	7.5	7.5	7.0	7.0	7.5	7.5	7.0	7.0
Max Green Setting (Gmax), s	10.5	42.5	37.0	36.0	36.5	16.5	25.0	48.0
Max Q Clear Time (g_c+I1), s	2.6	49.8	39.0	38.0	31.1	7.2	15.0	21.6
Green Ext Time (p_c), s	0.0	0.0	0.0	0.0	0.8	0.5	0.1	4.3

Intersection Summary	
HCM 6th Ctrl Delay	90.9
HCM 6th LOS	F

APPENDIX F2



Movement	EBT	EBR	WBL	WBT	NBL	NBR
Lane Configurations	f+T*		*¡	+f+	*¡*¡	r
Traffic Volume (veh/h)	798	95	65	701	85	17
Future Volume (veh/h)	798	95	65	701	85	17
Initial Q (Qb), veh	0	0	0	0	0	0
Ped-Bike Adj(A_pbT)		1.00	1.00		1.00	1.00
Parking Bus, Adj	1.00	1.00	1.00	1.00	1.00	1.00
Work Zone On Approach	No			No	No	
Adj Sat Flow, veh/h/ln	1900	1900	1900	1900	1900	1900
Adj Flow Rate, veh/h	887	106	72	779	94	19
Peak Hour Factor	0.90	0.90	0.90	0.90	0.90	0.90
Percent Heavy Veh, %	0	0	0	0	0	0
Cap, veh/h	1128	134	102	1869	1831	931
Arrive On Green	0.24	0.24	0.06	0.36	0.52	0.52
Sat Flow, veh/h	4869	559	1810	5358	3510	1610
Grp Volume(v), veh/h	652	341	72	779	94	19
Grp Sat Flow(s),veh/h/ln	1729	1799	1810	1729	1755	1610
Q Serve(g_s), s	19.4	19.6	4.3	12.4	1.4	0.6
Cycle Q Clear(g_c), s	19.4	19.6	4.3	12.4	1.4	0.6
Prop In Lane		0.31	1.00		1.00	1.00
Lane Grp Cap(c), veh/h	830	432	102	1869	1831	931
V/C Ratio(X)	0.79	0.79	0.70	0.42	0.05	0.02
Avail Cap(c_a), veh/h	1100	573	329	2924	1831	931
HCM Platoon Ratio	1.00	1.00	1.00	1.00	1.00	1.00
Upstream Filter(I)	1.00	1.00	0.85	0.85	1.00	1.00
Uniform Delay (d), s/veh	39.1	39.2	51.0	26.5	12.9	9.9
Incr Delay (d2), s/veh	2.8	5.4	5.5	0.1	0.1	0.0
Initial Q Delay(d3), s/veh	0.0	0.0	0.0	0.0	0.0	0.0
%ile BackOfQ(50%),veh/ln	8.1	8.8	2.0	4.8	0.6	0.2
Unsig. Movement Delay, s/veh						
LnGrp Delay(d), s/veh	41.9	44.6	56.4	26.6	13.0	9.9
LnGrp LOS	D	D	E	C	B	A
Approach Vol, veh/h	993			851	113	
Approach Delay, s/veh	42.8			29.1	12.5	
Approach LOS	D			C	B	

Timer - Assigned Phs		2	3	4		8
Phs Duration (G+Y+Rc), s		63.4	13.2	33.4		46.6
Change Period (Y+Rc), s		6.0	7.0	7.0		7.0
Max Green Setting (Gmax), s		35.0	20.0	35.0		62.0
Max Q Clear Time (g_c+I1), s		3.4	6.3	21.6		14.4
Green Ext Time (p_c), s		0.3	0.1	4.9		5.5

Intersection Summary	
HCM 6th Ctrl Delay, s/veh	35.1
HCM 6th LOS	D

> - ■>< ← < A t / VI 7

Movement	EBL	EBT	EBR	WBL	WBT	WBR	NBL	NBT	NBR	SBL	SBT	SBR
Lane Configurations	↰↰		↱↱	↰↰		rr	'i'i	tttt	i>	'i'i	+++	↱
Traffic Volume (veh/h)	688	0	378	193	0	382	100	602	391	485	706	445
Future Volume (veh/h)	688	0	378	193	0	382	100	602	391	485	706	445
Initial Q (Qb), veh	0	0	0	0	0	0	0	0	0	0	0	0
Ped-Bike Adj(A_pbT)	1.00		1.00	1.00		1.00	1.00		1.00	1.00		1.00
Parking Bus, Adj	1.00	1.00	1.00	1.00	1.00	1.00	1.00	1.00	1.00	1.00	1.00	1.00
Work Zone On Approach		No			No			No			No	
Adj Sat Flow, veh/h/ln	1900	0	1900	1900	0	1900	1900	1900	1900	1900	1900	1900
Adj Flow Rate, veh/h	748	0	411	210	0	415	109	654	0	527	767	0
Peak Hour Factor	0.92	0.92	0.92	0.92	0.92	0.92	0.92	0.92	0.92	0.92	0.92	0.92
Percent Heavy Veh, %	0	0	0	0	0	0	0	0	0	0	0	0
Cap, veh/h	821	0	0	821	0	0	1256	2514		601	1028	
Arrive On Green	0.23	0.00	0.00	0.23	0.00	0.00	0.36	0.38	0.00	0.17	0.20	0.00
Sat Flow, veh/h	3510	748		3510	210		3510	6536	1610	3510	5187	1610
Grp Volume(v), veh/h	748	48.9		210	31.3		109	654	0	527	767	0
Grp Sat Flow(s),veh/h/ln	1755	D		1755	C		1755	1634	1610	1755	1729	1610
Q Serve(g_s), s	20.7			4.9			2.1	6.8	0.0	14.6	13.9	0.0
Cycle Q Clear(g_c), s	20.7			4.9			2.1	6.8	0.0	14.6	13.9	0.0
Prop In Lane	1.00			1.00			1.00		1.00	1.00		1.00
Lane Grp Cap(c), veh/h	821			821			1256	2514		601	1028	
V/C Ratio(X)	0.91			0.26			0.09	0.26		0.88	0.75	
Avail Cap(c_a), veh/h	913			913			1256	2514		737	1504	
HCM Platoon Ratio	1.00			1.00			1.00	1.00	1.00	1.00	1.00	1.00
Upstream Filter(I)	1.00			1.00			0.81	0.81	0.00	1.00	1.00	0.00
Uniform Delay (d), s/veh	37.3			31.2			21.3	21.0	0.0	40.4	37.7	0.0
Incr Delay (d2), s/veh	11.6			0.1			0.0	0.2	0.0	8.7	4.9	0.0
Initial Q Delay(d3), s/veh	0.0			0.0			0.0	0.0	0.0	0.0	0.0	0.0
%ile BackOfQ(50%),veh/ln	10.0			2.0			0.8	2.5	0.0	6.7	6.0	0.0
Unsig. Movement Delay, s/veh												
LnGrp Delay(d), s/veh	48.9			31.3			21.3	21.2	0.0	49.1	42.7	0.0
LnGrp LOS	D			C			C	C		D	D	
Approach Vol, veh/h								763			1294	
Approach Delay, s/veh								21.2			45.3	
Approach LOS								C			D	

Timer - Assigned Phs	1	2	3		5	6	7
Phs Duration (G+Y+Rc), s	34.1	45.5	30.4		42.8	26.8	30.4
Change Period (Y+Rc), s	7.0	7.0	7.0		7.0	7.0	7.0
Max Green Setting (Gmax), s	21.0	19.0	26.0		11.0	29.0	26.0
Max Q Clear Time (g_c+I1), s	16.6	8.8	6.9		4.1	15.9	22.7
Green Ext Time (p_c), s	0.5	2.8	0.3		0.1	3.8	0.7

Intersection Summary	
HCM 6th Ctrl Delay, s/veh	39.1
HCM 6th LOS	D

Notes

Unsignalized Delay for [NBR, SBR] is excluded from calculations of the approach delay and intersection delay.

> - ■>< ← < A t / VI 7

Movement	EBL	EBT	EBR	WBL	WBT	WBR	NBL	NBT	NBR	SBL	SBT	SBR
Lane Configurations	↰	++	ƒ	'i'i	++	↱↱	'ft	tttt*		'i'i	tttfc	
Traffic Volume (veh/h)	306	124	19	19	54	62	57	726	80	341	766	169
Future Volume (veh/h)	306	124	19	19	54	62	57	726	80	341	766	169
Initial Q (Qb), veh	0	0	0	0	0	0	0	0	0	0	0	0
Ped-Bike Adj(A_pbT)	1.00		1.00	1.00		0.99	1.00		1.00	1.00		1.00
Parking Bus, Adj	1.00	1.00	1.00	1.00	1.00	1.00	1.00	1.00	1.00	1.00	1.00	1.00
Work Zone On Approach		No			No			No			No	
Adj Sat Flow, veh/h/ln	1900	1900	1900	1900	1900	1900	1900	1900	1900	1900	1900	1900
Adj Flow Rate, veh/h	336	136	21	21	59	68	63	798	88	375	842	186
Peak Hour Factor	0.91	0.91	0.91	0.91	0.91	0.91	0.91	0.91	0.91	0.91	0.91	0.91
Percent Heavy Veh, %	0	0	0	0	0	0	0	0	0	0	0	0
Cap, veh/h	268	656	293	142	267	207	259	2704	294	428	2731	590
Arrive On Green	0.15	0.18	0.18	0.04	0.07	0.07	0.07	0.45	0.45	0.12	0.50	0.50
Sat Flow, veh/h	1810	3610	1610	3510	3610	2791	3510	6029	655	3510	5419	1170
Grp Volume(v), veh/h	336	136	21	21	59	68	63	647	239	375	760	268
Grp Sat Flow(s),veh/h/ln	1810	1805	1610	1755	1805	1396	1755	1634	1782	1755	1634	1688
Q Serve(g_s), s	20.0	4.3	1.5	0.8	2.1	3.1	2.3	11.3	11.6	14.2	12.3	12.7
Cycle Q Clear(g_c), s	20.0	4.3	1.5	0.8	2.1	3.1	2.3	11.3	11.6	14.2	12.3	12.7
Prop In Lane	1.00		1.00	1.00		1.00	1.00		0.37	1.00		0.69
Lane Grp Cap(c), veh/h	268	656	293	142	267	207	259	2198	799	428	2470	851
V/C Ratio(X)	1.25	0.21	0.07	0.15	0.22	0.33	0.24	0.29	0.30	0.88	0.31	0.32
Avail Cap(c_a), veh/h	268	656	293	520	535	414	520	2198	799	520	2470	851
HCM Platoon Ratio	1.00	1.00	1.00	1.00	1.00	1.00	1.00	1.00	1.00	1.00	1.00	1.00
Upstream Filter(I)	1.00	1.00	1.00	1.00	1.00	1.00	1.00	1.00	1.00	0.71	0.71	0.71
Uniform Delay (d), s/veh	57.5	47.0	45.8	62.5	58.8	59.3	59.0	23.7	23.7	58.3	19.7	19.7
Incr Delay (d2), s/veh	140.9	0.2	0.1	0.2	0.4	0.9	0.2	0.3	1.0	8.9	0.2	0.7
Initial Q Delay(d3), s/veh	0.0	0.0	0.0	0.0	0.0	0.0	0.0	0.0	0.0	0.0	0.0	0.0
%ile BackOfQ(50%),veh/ln	19.5	1.9	0.6	0.3	0.9	1.1	1.0	4.3	4.9	6.6	4.5	4.9
Unsig. Movement Delay, s/veh												
LnGrp Delay(d), s/veh	198.4	47.1	45.9	62.7	59.2	60.2	59.1	24.0	24.7	67.1	19.9	20.4
LnGrp LOS	F	D	D	E	E	E	E	C	C	E	B	C
Approach Vol, veh/h		493			148			949			1403	
Approach Delay, s/veh		150.2			60.2			26.5			32.6	
Approach LOS		F			E			C			C	

Timer - Assigned Phs	1	2	3	4	5	6	7	8
Phs Duration (G+Y+Rc), s	24.0	68.0	12.0	31.0	16.5	75.5	26.5	16.5
Change Period (Y+Rc), s	7.5	7.5	6.5	6.5	6.5	7.5	6.5	6.5
Max Green Setting (Gmax), s	20.0	47.0	20.0	20.0	20.0	48.0	20.0	20.0
Max Q Clear Time (g_c+I1), s	16.3	13.6	2.8	6.3	4.3	14.7	22.0	5.1
Green Ext Time (p_c), s	0.3	3.5	0.0	0.6	0.1	4.3	0.0	0.4

Intersection Summary	
HCM 6th Ctrl Delay, s/veh	51.4
HCM 6th LOS	D

> - ■>< ← < A t / VI 7

Movement	EBL	EBT	EBR	WBL	WBT	WBR	NBL	NBT	NBR	SBL	SBT	SBR
Lane Configurations	*i*i	t +T*		↰	↑↑↑	↱↱	*i*i	f +1*		↰↰	↑↑	↱
Traffic Volume (veh/h)	457	334	23	54	344	346	23	60	17	260	145	399
Future Volume (veh/h)	457	334	23	54	344	346	23	60	17	260	145	399
Initial Q (Qb), veh	0	0	0	0	0	0	0	0	0	0	0	0
Ped-Bike Adj(A_pbT)	1.00		1.00	1.00		1.00	1.00		1.00	1.00		1.00
Parking Bus, Adj	1.00	1.00	1.00	1.00	1.00	1.00	1.00	1.00	1.00	1.00	1.00	1.00
Work Zone On Approach		No			No			No			No	
Adj Sat Flow, veh/h/ln	1900	1900	1900	1900	1900	1900	1900	1900	1900	1900	1900	1900
Adj Flow Rate, veh/h	508	371	26	60	382	384	26	67	19	289	161	443
Peak Hour Factor	0.90	0.90	0.90	0.90	0.90	0.90	0.90	0.90	0.90	0.90	0.90	0.90
Percent Heavy Veh, %	0	0	0	0	0	0	0	0	0	0	0	0
Cap, veh/h	453	1151	80	108	845	462	153	1740	456	336	1724	768
Arrive On Green	0.13	0.23	0.23	0.06	0.16	0.16	0.04	0.43	0.43	0.10	0.48	0.48
Sat Flow, veh/h	3510	4953	343	1810	5187	2834	3510	4093	1072	3510	3610	1609
Grp Volume(v), veh/h	508	258	139	60	382	384	26	56	30	289	161	443
Grp Sat Flow(s),veh/h/ln	1755	1729	1838	1810	1729	1417	1755	1729	1707	1755	1805	1609
Q Serve(g_s), s	20.0	9.6	9.8	5.0	10.3	20.3	1.1	1.5	1.6	12.6	3.8	30.8
Cycle Q Clear(g_c), s	20.0	9.6	9.8	5.0	10.3	20.3	1.1	1.5	1.6	12.6	3.8	30.8
Prop In Lane	1.00		0.19	1.00		1.00	1.00		0.63	1.00		1.00
Lane Grp Cap(c), veh/h	453	803	427	108	845	462	153	1470	726	336	1724	768
V/C Ratio(X)	1.12	0.32	0.33	0.56	0.45	0.83	0.17	0.04	0.04	0.86	0.09	0.58
Avail Cap(c_a), veh/h	453	959	510	233	1439	786	464	1470	726	464	1724	768
HCM Platoon Ratio	1.00	1.00	1.00	1.00	1.00	1.00	1.00	1.00	1.00	1.00	1.00	1.00
Upstream Filter(I)	0.52	0.52	0.52	0.96	0.96	0.96	1.00	1.00	1.00	1.00	1.00	1.00
Uniform Delay (d), s/veh	67.5	49.3	49.4	70.9	58.6	62.8	71.4	26.0	26.1	69.0	22.1	29.2
Incr Delay (d2), s/veh	69.6	0.1	0.2	1.6	0.3	2.9	0.2	0.0	0.1	8.8	0.1	3.1
Initial Q Delay(d3), s/veh	0.0	0.0	0.0	0.0	0.0	0.0	0.0	0.0	0.0	0.0	0.0	0.0
%ile BackOfQ(50%),veh/ln	18.1	4.1	4.4	2.3	4.5	7.3	0.5	0.6	0.7	5.9	1.6	12.1
Unsig. Movement Delay, s/veh												
LnGrp Delay(d), s/veh	137.1	49.4	49.6	72.5	58.9	65.7	71.6	26.1	26.2	77.8	22.3	32.3
LnGrp LOS	F	D	D	E	E	E	E	C	C	E	C	C
Approach Vol, veh/h		905			826			112			893	
Approach Delay, s/veh		98.7			63.0			36.7			45.2	
Approach LOS		F			E			D			D	

Timer - Assigned Phs	1	2	3	4	5	6	7	8
Phs Duration (G+Y+Rc), s	14.2	81.5	27.0	32.3	22.3	73.4	16.2	43.0
Change Period (Y+Rc), s	7.5	7.5	7.0	7.0	7.5	7.5	7.0	7.0
Max Green Setting (Gmax), s	20.5	42.5	20.0	43.0	20.5	42.5	20.0	43.0
Max Q Clear Time (g_c+I1), s	13.1	32.8	22.0	22.3	14.6	3.6	7.0	11.8
Green Ext Time (p_c), s	0.0	1.4	0.0	2.9	0.3	0.4	0.0	1.8

Intersection Summary	
HCM 6th Ctrl Delay, s/veh	67.9
HCM 6th LOS	E



Movement	EBT	EBR	WBL	WBT	NBL	NBR
Lane Configurations	+M	i*	↰	+ft	↰	↱
Traffic Volume (veh/h)	599	12	131	671	73	136
Future Volume (veh/h)	599	12	131	671	73	136
Initial Q (Qb), veh	0	0	0	0	0	0
Ped-Bike Adj(A_pbT)		1.00	1.00		1.00	1.00
Parking Bus, Adj	1.00	1.00	1.00	1.00	1.00	1.00
Work Zone On Approach	No			No	No	
Adj Sat Flow, veh/h/ln	1900	1900	1900	1900	1900	1900
Adj Flow Rate, veh/h	666	0	146	746	81	151
Peak Hour Factor	0.90	0.90	0.90	0.90	0.90	0.90
Percent Heavy Veh, %	0	0	0	0	0	0
Cap, veh/h	1046		181	1967	862	767
Arrive On Green	0.20	0.00	0.10	0.38	0.48	0.48
Sat Flow, veh/h	5358	1610	1810	5358	1810	1610
Grp Volume(v), veh/h	666	0	146	746	81	151
Grp Sat Flow(s),veh/h/ln	1729	1610	1810	1729	1810	1610
Q Serve(g_s), s	10.6	0.0	7.1	9.4	2.2	4.9
Cycle Q Clear(g_c), s	10.6	0.0	7.1	9.4	2.2	4.9
Prop In Lane		1.00	1.00		1.00	1.00
Lane Grp Cap(c), veh/h	1046		181	1967	862	767
V/C Ratio(X)	0.64		0.81	0.38	0.09	0.20
Avail Cap(c_a), veh/h	2017		302	3285	862	767
HCM Platoon Ratio	1.00	1.00	1.00	1.00	1.00	1.00
Upstream Filter(I)	0.82	0.00	1.00	1.00	1.00	1.00
Uniform Delay (d), s/veh	32.9	0.0	39.7	20.3	12.9	13.6
Incr Delay (d2), s/veh	0.6	0.0	6.3	0.1	0.2	0.6
Initial Q Delay(d3), s/veh	0.0	0.0	0.0	0.0	0.0	0.0
%ile BackOfQ(50%),veh/ln	4.4	0.0	3.3	3.4	0.8	1.7
Unsig. Movement Delay, s/veh						
LnGrp Delay(d), s/veh	33.5	0.0	45.9	20.4	13.1	14.2
LnGrp LOS	C		D	C	B	B
Approach Vol, veh/h	666			892	232	
Approach Delay, s/veh	33.5			24.6	13.8	
Approach LOS	C			C	B	

Timer - Assigned Phs	2	3	4		8
Phs Duration (G+Y+Rc), s	48.9	16.0	25.1		41.1
Change Period (Y+Rc), s	6.0	7.0	7.0		7.0
Max Green Setting (Gmax), s	20.0	15.0	35.0		57.0
Max Q Clear Time (g_c+I1), s	6.9	9.1	12.6		11.4
Green Ext Time (p_c), s	0.4	0.1	5.6		6.4

Intersection Summary	
HCM 6th Ctrl Delay, s/veh	26.5
HCM 6th LOS	C

Notes

Unsignalized Delay for [EBR] is excluded from calculations of the approach delay and intersection delay.



Movement	EBL	EBT	EBR	WBL	WBT	WBR	NBL	NBT	NBR	SBL	SBT	SBR
Lane Configurations												
Traffic Volume (veh/h)	53	0	26	11	0	9	99	780	40	16	1117	8
Future Volume (veh/h)	53	0	26	11	0	9	99	780	40	16	1117	8
Initial Q (Qb), veh	0	0	0	0	0	0	0	0	0	0	0	0
Ped-Bike Adj(A_pbT)	1.00		1.00	1.00		1.00	1.00		1.00	1.00		0.98
Parking Bus, Adj	1.00	1.00	1.00	1.00	1.00	1.00	1.00	1.00	1.00	1.00	1.00	1.00
Work Zone On Approach		No			No			No			No	
Adj Sat Flow, veh/h/ln	1900	1900	1900	1900	1900	1900	1900	1900	1900	1900	1900	1900
Adj Flow Rate, veh/h	56	0	28	12	0	10	105	830	43	17	1188	9
Peak Hour Factor	0.94	0.94	0.94	0.94	0.94	0.94	0.94	0.94	0.94	0.94	0.94	0.94
Percent Heavy Veh, %	0	0	0	0	0	0	0	0	0	0	0	0
Cap, veh/h	154	0	105	137	0	105	134	3847	199	34	3749	28
Arrive On Green	0.07	0.00	0.07	0.07	0.00	0.07	0.07	0.76	0.76	0.02	0.71	0.71
Sat Flow, veh/h	1427	0	1610	1404	0	1610	1810	5050	261	1810	5310	40
Grp Volume(v), veh/h	56	0	28	12	0	10	105	568	305	17	774	423
Grp Sat Flow(s),veh/h/ln	1427	0	1610	1404	0	1610	1810	1729	1853	1810	1729	1892
Q Serve(g_s), s	4.0	0.0	1.7	0.9	0.0	0.6	6.0	4.9	4.9	1.0	8.9	8.9
Cycle Q Clear(g_c), s	4.6	0.0	1.7	2.6	0.0	0.6	6.0	4.9	4.9	1.0	8.9	8.9
Prop In Lane	1.00		1.00	1.00		1.00	1.00		0.14	1.00		0.02
Lane Grp Cap(c), veh/h	154	0	105	137	0	105	134	2634	1411	34	2441	1336
V/C Ratio(X)	0.36	0.00	0.27	0.09	0.00	0.09	0.78	0.22	0.22	0.50	0.32	0.32
Avail Cap(c_a), veh/h	479	0	472	457	0	472	224	2634	1411	224	2441	1336
HCM Platoon Ratio	1.00	1.00	1.00	1.00	1.00	1.00	1.00	1.00	1.00	1.00	1.00	1.00
Upstream Filter(I)	1.00	0.00	1.00	1.00	0.00	1.00	0.95	0.95	0.95	1.00	1.00	1.00
Uniform Delay (d), s/veh	48.3	0.0	46.7	47.9	0.0	46.1	47.8	3.6	3.6	51.0	5.8	5.8
Incr Delay (d2), s/veh	3.1	0.0	2.8	0.6	0.0	0.8	17.8	0.2	0.3	22.8	0.3	0.6
Initial Q Delay(d3), s/veh	0.0	0.0	0.0	0.0	0.0	0.0	0.0	0.0	0.0	0.0	0.0	0.0
%ile BackOfQ(50%),veh/ln	1.6	0.0	0.8	0.3	0.0	0.3	3.3	1.1	1.3	0.6	2.5	2.8
Unsig. Movement Delay, s/veh												
LnGrp Delay(d), s/veh	51.4	0.0	49.5	48.5	0.0	47.0	65.6	3.7	3.9	73.9	6.2	6.5
LnGrp LOS	D		D	D		D	E	A	A	E	A	A
Approach Vol, veh/h		84			22			978			1214	
Approach Delay, s/veh		50.8			47.8			10.4			7.2	
Approach LOS		D			D			B			A	

Timer - Assigned Phs	1	2		4	5	6		8
Phs Duration (G+Y+Rc), s	6.0	86.0		13.1	11.8	80.1		13.1
Change Period (Y+Rc), s	4.0	6.0		6.2	4.0	6.0		6.2
Max Green Setting (Gmax), s	13.0	45.0		30.8	13.0	45.0		30.8
Max Q Clear Time (g_c+I1), s	3.0	6.9		6.6	8.0	10.9		4.6
Green Ext Time (p_c), s	0.0	11.9		0.6	0.2	16.7		0.1

Intersection Summary		
HCM 6th Ctrl Delay, s/veh		10.6
HCM 6th LOS		B

> - ■>< ← < A t / VI 7

Movement	EBL	EBT	EBR	WBL	WBT	WBR	NBL	NBT	NBR	SBL	SBT	SBR
Lane Configurations	*i*i	ttt	i*	↰↰	++	f	*i*i	ttt	i*	*i*i	+++	↱
Traffic Volume (veh/h)	128	233	103	80	265	101	155	721	106	133	749	273
Future Volume (veh/h)	128	233	103	80	265	101	155	721	106	133	749	273
Initial Q (Qb), veh	0	0	0	0	0	0	0	0	0	0	0	0
Ped-Bike Adj(A_pbT)	1.00		1.00	1.00		1.00	1.00		1.00	1.00		1.00
Parking Bus, Adj	1.00	1.00	1.00	1.00	1.00	1.00	1.00	1.00	1.00	1.00	1.00	1.00
Work Zone On Approach		No			No			No			No	
Adj Sat Flow, veh/h/ln	1900	1900	1900	1900	1900	1900	1900	1900	1900	1900	1900	1900
Adj Flow Rate, veh/h	138	251	111	86	285	109	167	775	114	143	805	294
Peak Hour Factor	0.93	0.93	0.93	0.93	0.93	0.93	0.93	0.93	0.93	0.93	0.93	0.93
Percent Heavy Veh, %	0	0	0	0	0	0	0	0	0	0	0	0
Cap, veh/h	201	671	208	148	412	183	231	2974	923	206	2937	911
Arrive On Green	0.06	0.13	0.13	0.04	0.11	0.11	0.07	0.57	0.57	0.06	0.57	0.57
Sat Flow, veh/h	3510	5187	1610	3510	3610	1606	3510	5187	1610	3510	5187	1609
Grp Volume(v), veh/h	138	251	111	86	285	109	167	775	114	143	805	294
Grp Sat Flow(s),veh/h/ln	1755	1729	1610	1755	1805	1606	1755	1729	1610	1755	1729	1609
Q Serve(g_s), s	4.2	4.9	7.1	2.6	8.4	7.1	5.1	8.2	3.6	4.4	8.8	10.7
Cycle Q Clear(g_c), s	4.2	4.9	7.1	2.6	8.4	7.1	5.1	8.2	3.6	4.4	8.8	10.7
Prop In Lane	1.00		1.00	1.00		1.00	1.00		1.00	1.00		1.00
Lane Grp Cap(c), veh/h	201	671	208	148	412	183	231	2974	923	206	2937	911
V/C Ratio(X)	0.69	0.37	0.53	0.58	0.69	0.59	0.72	0.26	0.12	0.69	0.27	0.32
Avail Cap(c_a), veh/h	351	1575	489	351	1096	488	351	2974	923	351	2937	911
HCM Platoon Ratio	1.00	1.00	1.00	1.00	1.00	1.00	1.00	1.00	1.00	1.00	1.00	1.00
Upstream Filter(I)	1.00	1.00	1.00	1.00	1.00	1.00	1.00	1.00	1.00	0.94	0.94	0.94
Uniform Delay (d), s/veh	50.9	43.8	44.8	51.7	46.9	46.3	50.4	11.8	10.8	50.8	12.2	12.7
Incr Delay (d2), s/veh	4.1	0.3	2.1	3.6	2.1	3.1	4.2	0.2	0.3	3.9	0.2	0.9
Initial Q Delay(d3), s/veh	0.0	0.0	0.0	0.0	0.0	0.0	0.0	0.0	0.0	0.0	0.0	0.0
%ile BackOfQ(50%),veh/ln	1.9	2.0	2.9	1.2	3.8	2.9	2.3	2.9	1.2	2.0	3.1	3.7
Unsig. Movement Delay, s/veh												
LnGrp Delay(d), s/veh	55.0	44.2	46.9	55.3	48.9	49.3	54.6	12.0	11.0	54.7	12.5	13.5
LnGrp LOS	E	D	D	E	D	D	D	B	B	D	B	B
Approach Vol, veh/h		500			480			1056			1242	
Approach Delay, s/veh		47.8			50.2			18.6			17.6	
Approach LOS		D			D			B			B	

Timer - Assigned Phs	1	2	3	4	5	6	7	8
Phs Duration (G+Y+Rc), s	10.5	70.1	8.6	20.8	11.2	69.3	10.3	19.2
Change Period (Y+Rc), s	4.0	7.0	4.0	* 6.6	4.0	7.0	4.0	* 6.6
Max Green Setting (Gmax), s	6.5	33.0	11.0	* 33	11.0	33.0	11.0	* 33
Max Q Clear Time (g_c+I1), s	6.4	10.2	4.6	9.1	7.1	12.7	6.2	10.4
Green Ext Time (p_c), s	0.1	5.2	0.1	1.8	0.2	6.0	0.1	1.9

Intersection Summary	
HCM 6th Ctrl Delay, s/veh	27.3
HCM 6th LOS	C

Notes

* HCM 6th computational engine requires equal clearance times for the phases crossing the barrier.

> - ■>< ← < A t MJ 7

Movement	EBL	EBT	EBR	WBL	WBT	WBR	NBL	NBT	NBR	SBL	SBT	SBR
Lane Configurations	'i's	+++	r	'i's	+++	f	Vi	tttt	f	Vi	ttti*	
Traffic Volume (veh/h)	115	262	135	412	901	301	181	729	128	153	816	69
Future Volume (veh/h)	115	262	135	412	901	301	181	729	128	153	816	69
Initial Q (Qb), veh	0	0	0	0	0	0	0	0	0	0	0	0
Ped-Bike Adj(A_pbT)	1.00		1.00	1.00		1.00	1.00		0.99	1.00		0.98
Parking Bus, Adj	1.00	1.00	1.00	1.00	1.00	1.00	1.00	1.00	1.00	1.00	1.00	1.00
Work Zone On Approach		No			No			No			No	
Adj Sat Flow, veh/h/ln	1900	1900	1900	1900	1900	1900	1900	1900	1900	1900	1900	1900
Adj Flow Rate, veh/h	129	294	152	463	1012	338	203	819	144	172	917	78
Peak Hour Factor	0.89	0.89	0.89	0.89	0.89	0.89	0.89	0.89	0.89	0.89	0.89	0.89
Percent Heavy Veh, %	0	0	0	0	0	0	0	0	0	0	0	0
Cap, veh/h	233	1556	482	436	1856	576	247	2212	538	216	2036	171
Arrive On Green	0.07	0.30	0.30	0.12	0.36	0.36	0.07	0.34	0.34	0.06	0.33	0.33
Sat Flow, veh/h	3510	5187	1607	3510	5187	1610	3510	6536	1588	3510	6179	520
Grp Volume(v), veh/h	129	294	152	463	1012	338	203	819	144	172	726	269
Grp Sat Flow(s),veh/h/ln	1755	1729	1607	1755	1729	1610	1755	1634	1588	1755	1634	1797
Q Serve(g_s), s	5.9	6.9	12.1	20.5	25.7	28.2	9.4	15.6	10.9	8.0	19.2	19.5
Cycle Q Clear(g_c), s	5.9	6.9	12.1	20.5	25.7	28.2	9.4	15.6	10.9	8.0	19.2	19.5
Prop In Lane	1.00		1.00	1.00		1.00	1.00		1.00	1.00		0.29
Lane Grp Cap(c), veh/h	233	1556	482	436	1856	576	247	2212	538	216	1615	592
V/C Ratio(X)	0.55	0.19	0.32	1.06	0.55	0.59	0.82	0.37	0.27	0.80	0.45	0.46
Avail Cap(c_a), veh/h	436	1556	482	436	1856	576	426	2212	538	426	1615	592
HCM Platoon Ratio	1.00	1.00	1.00	1.00	1.00	1.00	1.00	1.00	1.00	1.00	1.00	1.00
Upstream Filter(I)	1.00	1.00	1.00	1.00	1.00	1.00	0.99	0.99	0.99	1.00	1.00	1.00
Uniform Delay (d), s/veh	74.6	42.9	44.6	72.2	42.3	43.1	75.7	41.3	39.7	76.4	43.5	43.6
Incr Delay (d2), s/veh	0.8	0.3	1.7	60.4	1.2	4.3	2.6	0.5	1.2	2.5	0.9	2.5
Initial Q Delay(d3), s/veh	0.0	0.0	0.0	0.0	0.0	0.0	0.0	0.0	0.0	0.0	0.0	0.0
%ile BackOfQ(50%),veh/ln	2.6	3.0	4.9	12.7	10.9	11.6	4.3	6.3	4.3	3.6	7.8	9.0
Unsig. Movement Delay, s/veh												
LnGrp Delay(d), s/veh	75.4	43.1	46.4	132.6	43.4	47.4	78.2	41.8	40.9	78.9	44.4	46.1
LnGrp LOS	E	D	D	F	D	D	E	D	D	E	D	D
Approach Vol, veh/h		575			1813			1166			1167	
Approach Delay, s/veh		51.2			66.9			48.0			49.9	
Approach LOS		D			E			D			D	

Timer - Assigned Phs	1	2	3	4	5	6	7	8
Phs Duration (G+Y+Rc), s	17.2	62.8	28.0	57.0	18.6	61.4	18.5	66.5
Change Period (Y+Rc), s	7.0	7.0	7.5	7.5	7.0	7.0	7.5	7.5
Max Green Setting (Gmax), s	20.0	46.0	20.5	49.5	20.0	46.0	20.5	49.5
Max Q Clear Time (g_c+I1), s	10.0	17.6	22.5	14.1	11.4	21.5	7.9	30.2
Green Ext Time (p_c), s	0.2	7.3	0.0	2.2	0.2	7.6	0.1	7.3

Intersection Summary	
HCM 6th Ctrl Delay, s/veh	56.1
HCM 6th LOS	E



Movement	EBL	EBT	EBR	WBL	WBT	WBR	NBL	NBT	NBR	SBL	SBT	SBR
Lane Configurations	fl	++	r	fl	++	r	'i'i	tttt	r	'i'i	tttt	r
Traffic Volume (veh/h)	76	32	61	50	54	58	109	834	39	57	929	259
Future Volume (veh/h)	76	32	61	50	54	58	109	834	39	57	929	259
Initial Q (Qb), veh	0	0	0	0	0	0	0	0	0	0	0	0
Ped-Bike Adj(A_pbT)	1.00		1.00	1.00		1.00	1.00		1.00	1.00		1.00
Parking Bus, Adj	1.00	1.00	1.00	1.00	1.00	1.00	1.00	1.00	1.00	1.00	1.00	1.00
Work Zone On Approach		No			No			No			No	
Adj Sat Flow, veh/h/ln	1900	1900	1900	1900	1900	1900	1900	1900	1900	1900	1900	1900
Adj Flow Rate, veh/h	81	34	0	53	57	0	116	887	0	61	988	0
Peak Hour Factor	0.94	0.94	0.94	0.94	0.94	0.94	0.94	0.94	0.94	0.94	0.94	0.94
Percent Heavy Veh, %	0	0	0	0	0	0	0	0	0	0	0	0
Cap, veh/h	210	272		192	254		168	4180		155	4155	
Arrive On Green	0.06	0.08	0.00	0.05	0.07	0.00	0.05	0.64	0.00	0.04	0.64	0.00
Sat Flow, veh/h	3510	3610	1610	3510	3610	1610	3510	6536	1610	3510	6536	1610
Grp Volume(v), veh/h	81	34	0	53	57	0	116	887	0	61	988	0
Grp Sat Flow(s),veh/h/ln	1755	1805	1610	1755	1805	1610	1755	1634	1610	1755	1634	1610
Q Serve(g_s), s	3.2	1.3	0.0	2.1	2.2	0.0	4.7	8.2	0.0	2.5	9.4	0.0
Cycle Q Clear(g_c), s	3.2	1.3	0.0	2.1	2.2	0.0	4.7	8.2	0.0	2.5	9.4	0.0
Prop In Lane	1.00		1.00	1.00		1.00	1.00		1.00	1.00		1.00
Lane Grp Cap(c), veh/h	210	272		192	254		168	4180		155	4155	
V/C Ratio(X)	0.39	0.12		0.28	0.22		0.69	0.21		0.39	0.24	
Avail Cap(c_a), veh/h	496	1033		496	1033		484	4180		484	4155	
HCM Platoon Ratio	1.00	1.00	1.00	1.00	1.00	1.00	1.00	1.00	1.00	1.00	1.00	1.00
Upstream Filter(I)	1.00	1.00	0.00	1.00	1.00	0.00	0.98	0.98	0.00	0.73	0.73	0.00
Uniform Delay (d), s/veh	65.6	62.6	0.0	65.8	63.6	0.0	68.0	10.9	0.0	67.4	11.3	0.0
Incr Delay (d2), s/veh	1.4	0.2	0.0	0.8	0.5	0.0	4.9	0.1	0.0	1.2	0.1	0.0
Initial Q Delay(d3), s/veh	0.0	0.0	0.0	0.0	0.0	0.0	0.0	0.0	0.0	0.0	0.0	0.0
%ile BackOfQ(50%),veh/ln	1.5	0.6	0.0	1.0	1.0	0.0	2.2	2.8	0.0	1.1	3.2	0.0
Unsig. Movement Delay, s/veh												
LnGrp Delay(d), s/veh	67.0	62.8	0.0	66.5	64.2	0.0	72.9	11.0	0.0	68.6	11.4	0.0
LnGrp LOS	E	E		E	E		E	B		E	B	
Approach Vol, veh/h		115			110			1003			1049	
Approach Delay, s/veh		65.8			65.3			18.2			14.8	
Approach LOS		E			E			B			B	

Timer - Assigned Phs	1	2	3	4	5	6	7	8
Phs Duration (G+Y+Rc), s	13.4	99.7	14.4	17.4	13.9	99.2	15.2	16.7
Change Period (Y+Rc), s	7.0	7.0	6.5	6.5	7.0	7.0	6.5	6.5
Max Green Setting (Gmax), s	20.0	36.0	20.5	41.5	20.0	36.0	20.5	41.5
Max Q Clear Time (g_c+I1), s	4.5	10.2	4.1	3.3	6.7	11.4	5.2	4.2
Green Ext Time (p_c), s	0.1	7.0	0.1	0.2	0.2	7.9	0.2	0.4

Intersection Summary	
HCM 6th Ctrl Delay, s/veh	21.3
HCM 6th LOS	C

Notes

Unsignalized Delay for [NBR, EBR, WBR, SBR] is excluded from calculations of the approach delay and intersection delay.



Movement	EBL	EBT	EBR	WBL	WBT	WBR	NBL	NBT	NBR	SBL	SBT	SBR
Lane Configurations	fl	++	r	fl	++	r	'i'i	tttt	r	'i'i	tttt	r
Traffic Volume (veh/h)	49	43	78	59	78	24	319	981	67	31	933	129
Future Volume (veh/h)	49	43	78	59	78	24	319	981	67	31	933	129
Initial Q (Qb), veh	0	0	0	0	0	0	0	0	0	0	0	0
Ped-Bike Adj(A_pbT)	1.00		1.00	1.00		1.00	1.00		1.00	1.00		1.00
Parking Bus, Adj	1.00	1.00	1.00	1.00	1.00	1.00	1.00	1.00	1.00	1.00	1.00	1.00
Work Zone On Approach		No			No			No			No	
Adj Sat Flow, veh/h/ln	1900	1900	1900	1900	1900	1900	1900	1900	1900	1900	1900	1900
Adj Flow Rate, veh/h	52	45	0	62	82	0	336	1033	0	33	982	0
Peak Hour Factor	0.95	0.95	0.95	0.95	0.95	0.95	0.95	0.95	0.95	0.95	0.95	0.95
Percent Heavy Veh, %	0	0	0	0	0	0	0	0	0	0	0	0
Cap, veh/h	223	267		235	279		385	3985		148	3543	
Arrive On Green	0.06	0.07	0.00	0.07	0.08	0.00	0.11	0.61	0.00	0.04	0.54	0.00
Sat Flow, veh/h	3510	3610	1610	3510	3610	1610	3510	6536	1610	3510	6536	1610
Grp Volume(v), veh/h	52	45	0	62	82	0	336	1033	0	33	982	0
Grp Sat Flow(s),veh/h/ln	1755	1805	1610	1755	1805	1610	1755	1634	1610	1755	1634	1610
Q Serve(g_s), s	1.9	1.6	0.0	2.3	2.9	0.0	12.7	9.9	0.0	1.2	10.9	0.0
Cycle Q Clear(g_c), s	1.9	1.6	0.0	2.3	2.9	0.0	12.7	9.9	0.0	1.2	10.9	0.0
Prop In Lane	1.00		1.00	1.00		1.00	1.00		1.00	1.00		1.00
Lane Grp Cap(c), veh/h	223	267		235	279		385	3985		148	3543	
V/C Ratio(X)	0.23	0.17		0.26	0.29		0.87	0.26		0.22	0.28	
Avail Cap(c_a), veh/h	312	1177		312	1177		416	3985		234	3543	
HCM Platoon Ratio	1.00	1.00	1.00	1.00	1.00	1.00	1.00	1.00	1.00	1.00	1.00	1.00
Upstream Filter(I)	1.00	1.00	0.00	1.00	1.00	0.00	0.94	0.94	0.00	0.98	0.98	0.00
Uniform Delay (d), s/veh	60.1	58.6	0.0	59.8	58.8	0.0	59.2	12.2	0.0	62.5	16.7	0.0
Incr Delay (d2), s/veh	0.2	0.2	0.0	0.2	0.4	0.0	15.3	0.1	0.0	0.3	0.2	0.0
Initial Q Delay(d3), s/veh	0.0	0.0	0.0	0.0	0.0	0.0	0.0	0.0	0.0	0.0	0.0	0.0
%ile BackOfQ(50%),veh/ln	0.8	0.7	0.0	1.0	1.4	0.0	6.3	3.4	0.0	0.5	3.9	0.0
Unsig. Movement Delay, s/veh												
LnGrp Delay(d), s/veh	60.3	58.8	0.0	60.1	59.2	0.0	74.4	12.4	0.0	62.8	16.9	0.0
LnGrp LOS	E	E		E	E		E	B		E	B	
Approach Vol, veh/h		97			144			1369			1015	
Approach Delay, s/veh		59.6			59.6			27.6			18.3	
Approach LOS		E			E			C			B	

Timer - Assigned Phs	1	2	3	4	5	6	7	8
Phs Duration (G+Y+Rc), s	12.7	89.3	16.0	17.0	21.8	80.2	15.6	17.4
Change Period (Y+Rc), s	7.0	7.0	7.0	7.0	7.0	7.0	7.0	7.0
Max Green Setting (Gmax), s	9.0	42.0	12.0	44.0	16.0	35.0	12.0	44.0
Max Q Clear Time (g_c+I1), s	3.2	11.9	4.3	3.6	14.7	12.9	3.9	4.9
Green Ext Time (p_c), s	0.0	7.3	0.0	0.2	0.1	6.3	0.0	0.4

Intersection Summary	
HCM 6th Ctrl Delay, s/veh	27.0
HCM 6th LOS	C

Notes

Unsignalized Delay for [NBR, EBR, WBR, SBR] is excluded from calculations of the approach delay and intersection delay.

> - ■>< ← < A t MJ 7

Movement	EBL	EBT	EBR	WBL	WBT	WBR	NBL	NBT	NBR	SBL	SBT	SBR
Lane Configurations	Vi	↑	f	vs	++	r	's'i	tttt	r	's'i	tttt	↱
Traffic Volume (veh/h)	376	75	326	139	169	32	356	791	312	102	630	222
Future Volume (veh/h)	376	75	326	139	169	32	356	791	312	102	630	222
Initial Q (Qb), veh	0	0	0	0	0	0	0	0	0	0	0	0
Ped-Bike Adj(A_pbT)	1.00		1.00	1.00		1.00	1.00		1.00	1.00		0.99
Parking Bus, Adj	1.00	1.00	1.00	1.00	1.00	1.00	1.00	1.00	1.00	1.00	1.00	1.00
Work Zone On Approach		No			No			No			No	
Adj Sat Flow, veh/h/ln	1900	1900	1900	1900	1900	1900	1900	1900	1900	1900	1900	1900
Adj Flow Rate, veh/h	392	78	340	145	176	33	371	824	325	106	656	231
Peak Hour Factor	0.96	0.96	0.96	0.96	0.96	0.96	0.96	0.96	0.96	0.96	0.96	0.96
Percent Heavy Veh, %	0	0	0	0	0	0	0	0	0	0	0	0
Cap, veh/h	944	429	364	412	267	119	424	3013	929	155	2513	1044
Arrive On Green	0.27	0.23	0.23	0.12	0.07	0.07	0.12	0.46	0.46	0.04	0.38	0.38
Sat Flow, veh/h	3510	1900	1610	3510	3610	1610	3510	6536	1606	3510	6536	1589
Grp Volume(v), veh/h	392	78	340	145	176	33	371	824	325	106	656	231
Grp Sat Flow(s),veh/h/ln	1755	1900	1610	1755	1805	1610	1755	1634	1606	1755	1634	1589
Q Serve(g_s), s	13.3	4.8	30.0	5.5	6.9	2.8	15.1	11.3	15.5	4.3	10.0	8.5
Cycle Q Clear(g_c), s	13.3	4.8	30.0	5.5	6.9	2.8	15.1	11.3	15.5	4.3	10.0	8.5
Prop In Lane	1.00		1.00	1.00		1.00	1.00		1.00	1.00		1.00
Lane Grp Cap(c), veh/h	944	429	364	412	267	119	424	3013	929	155	2513	1044
V/C Ratio(X)	0.42	0.18	0.94	0.35	0.66	0.28	0.88	0.27	0.35	0.68	0.26	0.22
Avail Cap(c_a), veh/h	944	563	477	412	523	233	605	3013	929	412	2513	1044
HCM Platoon Ratio	1.00	1.00	1.00	1.00	1.00	1.00	1.00	1.00	1.00	1.00	1.00	1.00
Upstream Filter(I)	1.00	1.00	1.00	1.00	1.00	1.00	0.94	0.94	0.94	0.98	0.98	0.98
Uniform Delay (d), s/veh	43.6	45.3	55.1	58.9	65.3	63.5	62.7	24.1	16.2	68.3	30.5	10.2
Incr Delay (d2), s/veh	1.3	0.1	19.9	2.4	1.0	0.5	7.1	0.2	1.0	1.9	0.2	0.5
Initial Q Delay(d3), s/veh	0.0	0.0	0.0	0.0	0.0	0.0	0.0	0.0	0.0	0.0	0.0	0.0
%ile BackOfQ(50%),veh/ln	6.0	2.3	14.0	2.6	3.2	1.2	7.0	4.3	5.8	1.9	3.9	3.0
Unsig. Movement Delay, s/veh												
LnGrp Delay(d), s/veh	45.0	45.4	75.0	61.3	66.4	63.9	69.8	24.3	17.1	70.2	30.8	10.7
LnGrp LOS	D	D	E	E	E	E	E	C	B	E	C	B
Approach Vol, veh/h		810			354			1520			993	
Approach Delay, s/veh		57.6			64.1			33.9			30.3	
Approach LOS		E			E			C			C	

Timer - Assigned Phs	1	2	3	4	5	6	7	8
Phs Duration (G+Y+Rc), s	11.4	72.8	22.0	38.7	22.5	61.7	44.0	16.7
Change Period (Y+Rc), s	5.0	6.0	5.0	6.0	5.0	6.0	5.0	6.0
Max Green Setting (Gmax), s	17.0	46.0	17.0	43.0	25.0	38.0	39.0	21.0
Max Q Clear Time (g_c+I1), s	6.3	17.5	7.5	32.0	17.1	12.0	15.3	8.9
Green Ext Time (p_c), s	0.1	4.0	0.1	0.7	0.4	3.0	0.7	0.5

Intersection Summary	
HCM 6th Ctrl Delay, s/veh	41.1
HCM 6th LOS	D



Movement	EBL	EBR	NBL	NBT	SBT	SBR
Lane Configurations						
Traffic Volume (veh/h)	598	598	268	860	871	223
Future Volume (veh/h)	598	598	268	860	871	223
Initial Q (Qb), veh	0	0	0	0	0	0
Ped-Bike Adj(A_pbT)	1.00	1.00	1.00			1.00
Parking Bus, Adj	1.00	1.00	1.00	1.00	1.00	1.00
Work Zone On Approach	No			No	No	
Adj Sat Flow, veh/h/ln	1900	1900	1900	1900	1900	1900
Adj Flow Rate, veh/h	643	643	288	925	937	240
Peak Hour Factor	0.93	0.93	0.93	0.93	0.93	0.93
Percent Heavy Veh, %	0	0	0	0	0	0
Cap, veh/h	1372	792	354	3366	2489	1242
Arrive On Green	0.39	0.39	0.10	0.51	0.38	0.38
Sat Flow, veh/h	3510	1610	3510	6802	6802	1610
Grp Volume(v), veh/h	643	643	288	925	937	240
Grp Sat Flow(s),veh/h/ln	1755	1610	1755	1634	1634	1610
Q Serve(g_s), s	16.4	40.5	9.6	9.6	12.4	4.8
Cycle Q Clear(g_c), s	16.4	40.5	9.6	9.6	12.4	4.8
Prop In Lane	1.00	1.00	1.00			1.00
Lane Grp Cap(c), veh/h	1372	792	354	3366	2489	1242
V/C Ratio(X)	0.47	0.81	0.81	0.27	0.38	0.19
Avail Cap(c_a), veh/h	1372	792	1053	3366	2489	1242
HCM Platoon Ratio	1.00	1.00	1.00	1.00	1.00	1.00
Upstream Filter(I)	1.00	1.00	0.91	0.91	0.90	0.90
Uniform Delay (d), s/veh	27.3	25.8	52.8	16.4	26.9	3.7
Incr Delay (d2), s/veh	1.2	8.9	1.6	0.2	0.4	0.3
Initial Q Delay(d3), s/veh	0.0	0.0	0.0	0.0	0.0	0.0
%ile BackOfQ(50%),veh/ln	7.0	34.3	4.2	3.4	4.7	4.9
Unsig. Movement Delay, s/veh						
LnGrp Delay(d), s/veh	28.4	34.7	54.4	16.6	27.3	4.0
LnGrp LOS	C	C	D	B	C	A
Approach Vol, veh/h	1286			1213	1177	
Approach Delay, s/veh	31.5			25.6	22.5	
Approach LOS	C			C	C	

Timer - Assigned Phs		2		4	5	6
Phs Duration (G+Y+Rc), s		68.0		52.0	16.1	51.9
Change Period (Y+Rc), s		6.2		5.1	4.0	6.2
Max Green Setting (Gmax), s		61.8		46.9	36.0	21.8
Max Q Clear Time (g_c+I1), s		11.6		42.5	11.6	14.4
Green Ext Time (p_c), s		4.1		1.4	0.5	2.7

Intersection Summary		
HCM 6th Ctrl Delay, s/veh		26.7
HCM 6th LOS		C

> - ■>< ← < A t MJ 7

Movement	EBL	EBT	EBR	WBL	WBT	WBR	NBL	NBT	NBR	SBL	SBT	SBR
Lane Configurations	Vs	↟		3+	_r_	!i		tttfc		'i's	M+	?
Traffic Volume (veh/h)	261	16	154	85	18	240	163	627	124	151	982	336
Future Volume (veh/h)	261	16	154	85	18	240	163	627	124	151	982	336
Initial Q (Qb), veh	0	0	0	0	0	0	0	0	0	0	0	0
Ped-Bike Adj(A_pbT)	1.00		1.00	1.00		1.00	1.00		0.99	1.00		1.00
Parking Bus, Adj	1.00	1.00	1.00	1.00	1.00	1.00	1.00	1.00	1.00	1.00	1.00	1.00
Work Zone On Approach		No			No			No			No	
Adj Sat Flow, veh/h/ln	1900	1900	1900	1900	1900	1900	1900	1900	1900	1900	1900	1900
Adj Flow Rate, veh/h	272	17	160	89	19	250	170	653	129	157	1023	0
Peak Hour Factor	0.96	0.96	0.96	0.96	0.96	0.96	0.96	0.96	0.96	0.96	0.96	0.96
Percent Heavy Veh, %	0	0	0	0	0	0	0	0	0	0	0	0
Cap, veh/h	334	33	307	129	350	295	145	2673	510	203	2388	
Arrive On Green	0.10	0.21	0.21	0.07	0.18	0.18	0.08	0.48	0.48	0.06	0.46	0.00
Sat Flow, veh/h	3510	157	1477	1810	1900	1602	1810	5539	1057	3510	5187	1610
Grp Volume(v), veh/h	272	0	177	89	19	250	170	575	207	157	1023	0
Grp Sat Flow(s),veh/h/ln	1755	0	1634	1810	1900	1602	1810	1634	1694	1755	1729	1610
Q Serve(g_s), s	11.4	0.0	14.4	7.2	1.2	22.6	12.0	10.3	10.8	6.6	19.9	0.0
Cycle Q Clear(g_c), s	11.4	0.0	14.4	7.2	1.2	22.6	12.0	10.3	10.8	6.6	19.9	0.0
Prop In Lane	1.00		0.90	1.00		1.00	1.00		0.62	1.00		1.00
Lane Grp Cap(c), veh/h	334	0	340	129	350	295	145	2365	817	203	2388	
V/C Ratio(X)	0.81	0.00	0.52	0.69	0.05	0.85	1.17	0.24	0.25	0.77	0.43	
Avail Cap(c_a), veh/h	503	0	561	271	665	561	145	2365	817	234	2388	
HCM Platoon Ratio	1.00	1.00	1.00	1.00	1.00	1.00	1.00	1.00	1.00	1.00	1.00	1.00
Upstream Filter(I)	1.00	0.00	1.00	1.00	1.00	1.00	1.00	1.00	1.00	0.83	0.83	0.00
Uniform Delay (d), s/veh	66.6	0.0	52.8	68.0	50.4	59.1	69.0	22.8	22.9	69.7	27.2	0.0
Incr Delay (d2), s/veh	7.9	0.0	1.8	8.9	0.1	9.1	129.3	0.2	0.7	12.1	0.5	0.0
Initial Q Delay(d3), s/veh	0.0	0.0	0.0	0.0	0.0	0.0	0.0	0.0	0.0	0.0	0.0	0.0
%ile BackOfQ(50%),veh/ln	5.5	0.0	6.2	3.7	0.6	10.0	10.6	3.9	4.4	3.3	8.0	0.0
Unsig. Movement Delay, s/veh												
LnGrp Delay(d), s/veh	74.4	0.0	54.5	76.9	50.5	68.2	198.3	23.0	23.6	81.8	27.7	0.0
LnGrp LOS	E		D	E	D	E	F	C	C	F	C	
Approach Vol, veh/h		449			358			952			1180	
Approach Delay, s/veh		66.6			69.4			54.4			34.9	
Approach LOS		E			E			D			C	

Timer - Assigned Phs	1	2	3	4	5	6	7	8
Phs Duration (G+Y+Rc), s	15.7	79.4	17.2	37.7	19.0	76.1	20.8	34.2
Change Period (Y+Rc), s	7.0	7.0	6.5	6.5	7.0	7.0	6.5	6.5
Max Green Setting (Gmax), s	10.0	39.0	22.5	51.5	12.0	37.0	21.5	52.5
Max Q Clear Time (g_c+I1), s	8.6	12.8	9.2	16.4	14.0	21.9	13.4	24.6
Green Ext Time (p_c), s	0.1	8.1	0.2	1.7	0.0	8.2	0.9	1.6

Intersection Summary	
HCM 6th Ctrl Delay, s/veh	50.3
HCM 6th LOS	D

Notes

Unsignalized Delay for [SBR] is excluded from calculations of the approach delay and intersection delay.



Movement	EBT	EBR	WBL	WBT	NBL	NBR
Lane Configurations	f+T*		*i	+f+	*i*i	r
Traffic Volume (veh/h)	1483	119	61	792	61	43
Future Volume (veh/h)	1483	119	61	792	61	43
Initial Q (Qb), veh	0	0	0	0	0	0
Ped-Bike Adj(A_pbT)		1.00	1.00		1.00	1.00
Parking Bus, Adj	1.00	1.00	1.00	1.00	1.00	1.00
Work Zone On Approach	No			No	No	
Adj Sat Flow, veh/h/ln	1900	1900	1900	1900	1900	1900
Adj Flow Rate, veh/h	1545	124	64	825	64	45
Peak Hour Factor	0.96	0.96	0.96	0.96	0.96	0.96
Percent Heavy Veh, %	0	0	0	0	0	0
Cap, veh/h	1557	125	99	2264	1563	805
Arrive On Green	0.32	0.32	0.05	0.44	0.45	0.45
Sat Flow, veh/h	5066	393	1810	5358	3510	1610
Grp Volume(v), veh/h	1091	578	64	825	64	45
Grp Sat Flow(s),veh/h/ln	1729	1829	1810	1729	1755	1610
Q Serve(g_s), s	34.6	34.6	3.8	11.7	1.1	1.6
Cycle Q Clear(g_c), s	34.6	34.6	3.8	11.7	1.1	1.6
Prop In Lane		0.21	1.00		1.00	1.00
Lane Grp Cap(c), veh/h	1100	582	99	2264	1563	805
V/C Ratio(X)	0.99	0.99	0.65	0.36	0.04	0.06
Avail Cap(c_a), veh/h	1100	582	329	2924	1563	805
HCM Platoon Ratio	1.00	1.00	1.00	1.00	1.00	1.00
Upstream Filter(I)	1.00	1.00	0.85	0.85	1.00	1.00
Uniform Delay (d), s/veh	37.4	37.4	51.0	20.8	17.2	14.1
Incr Delay (d2), s/veh	25.1	35.3	4.4	0.1	0.0	0.1
Initial Q Delay(d3), s/veh	0.0	0.0	0.0	0.0	0.0	0.0
%ile BackOfQ(50%),veh/ln	17.4	20.1	1.8	4.4	0.5	0.6
Unsig. Movement Delay, s/veh						
LnGrp Delay(d), s/veh	62.4	72.7	55.4	20.9	17.3	14.3
LnGrp LOS	E	E	E	C	B	B
Approach Vol, veh/h	1669			889	109	
Approach Delay, s/veh	66.0			23.3	16.0	
Approach LOS	E			C	B	

Timer - Assigned Phs		2	3	4		8
Phs Duration (G+Y+Rc), s		55.0	13.0	42.0		55.0
Change Period (Y+Rc), s		6.0	7.0	7.0		7.0
Max Green Setting (Gmax), s		35.0	20.0	35.0		62.0
Max Q Clear Time (g_c+I1), s		3.6	5.8	36.6		13.7
Green Ext Time (p_c), s		0.3	0.1	0.0		5.9

Intersection Summary	
HCM 6th Ctrl Delay, s/veh	49.7
HCM 6th LOS	D

> - ■>< ← < A t / VI 7

Movement	EBL	EBT	EBR	WBL	WBT	WBR	NBL	NBT	NBR	SBL	SBT	SBR
Lane Configurations	↰↰		↱↱	↰↰		rr	'i'i	tttt	i>	'i'i	+++	↱
Traffic Volume (veh/h)	562	0	211	124	0	415	307	951	493	334	680	554
Future Volume (veh/h)	562	0	211	124	0	415	307	951	493	334	680	554
Initial Q (Qb), veh	0	0	0	0	0	0	0	0	0	0	0	0
Ped-Bike Adj(A_pbT)	1.00		1.00	1.00		1.00	1.00		1.00	1.00		1.00
Parking Bus, Adj	1.00	1.00	1.00	1.00	1.00	1.00	1.00	1.00	1.00	1.00	1.00	1.00
Work Zone On Approach		No			No			No			No	
Adj Sat Flow, veh/h/ln	1900	0	1900	1900	0	1900	1900	1900	1900	1900	1900	1900
Adj Flow Rate, veh/h	604	0	227	133	0	446	330	1023	0	359	731	0
Peak Hour Factor	0.93	0.93	0.93	0.93	0.93	0.93	0.93	0.93	0.93	0.93	0.93	0.93
Percent Heavy Veh, %	0	0	0	0	0	0	0	0	0	0	0	0
Cap, veh/h	686	0	0	686	0	0	1417	3073		436	990	
Arrive On Green	0.20	0.00	0.00	0.20	0.00	0.00	0.40	0.47	0.00	0.12	0.19	0.00
Sat Flow, veh/h	3510	604		3510	133		3510	6536	1610	3510	5187	1610
Grp Volume(v), veh/h	604	45.6		133	33.7		330	1023	0	359	731	0
Grp Sat Flow(s),veh/h/ln	1755	D		1755	C		1755	1634	1610	1755	1729	1610
Q Serve(g_s), s	16.7			3.2			6.2	9.8	0.0	10.0	13.3	0.0
Cycle Q Clear(g_c), s	16.7			3.2			6.2	9.8	0.0	10.0	13.3	0.0
Prop In Lane	1.00			1.00			1.00		1.00	1.00		1.00
Lane Grp Cap(c), veh/h	686			686			1417	3073		436	990	
V/C Ratio(X)	0.88			0.19			0.23	0.33		0.82	0.74	
Avail Cap(c_a), veh/h	913			913			1417	3073		737	1504	
HCM Platoon Ratio	1.00			1.00			1.00	1.00	1.00	1.00	1.00	1.00
Upstream Filter(I)	1.00			1.00			0.80	0.80	0.00	1.00	1.00	0.00
Uniform Delay (d), s/veh	39.1			33.6			19.6	16.6	0.0	42.7	38.1	0.0
Incr Delay (d2), s/veh	6.5			0.1			0.0	0.2	0.0	1.5	4.9	0.0
Initial Q Delay(d3), s/veh	0.0			0.0			0.0	0.0	0.0	0.0	0.0	0.0
%ile BackOfQ(50%),veh/ln	7.6			1.3			2.3	3.4	0.0	4.2	5.8	0.0
Unsig. Movement Delay, s/veh												
LnGrp Delay(d), s/veh	45.6			33.7			19.7	16.9	0.0	44.2	43.0	0.0
LnGrp LOS	D			C			B	B		D	D	
Approach Vol, veh/h								1353			1090	
Approach Delay, s/veh								17.6			43.4	
Approach LOS								B			D	

Timer - Assigned Phs	1	2	3		5	6	7
Phs Duration (G+Y+Rc), s	19.4	54.0	26.6		47.4	26.1	26.6
Change Period (Y+Rc), s	7.0	7.0	7.0		7.0	7.0	7.0
Max Green Setting (Gmax), s	21.0	19.0	26.0		11.0	29.0	26.0
Max Q Clear Time (g_c+I1), s	12.0	11.8	5.2		8.2	15.3	18.7
Green Ext Time (p_c), s	0.5	3.5	0.2		0.2	3.7	0.8

Intersection Summary	
HCM 6th Ctrl Delay, s/veh	32.4
HCM 6th LOS	C

Notes

Unsignalized Delay for [NBR, SBR] is excluded from calculations of the approach delay and intersection delay.

> - ■>< ← < A t / VI 7

Movement	EBL	EBT	EBR	WBL	WBT	WBR	NBL	NBT	NBR	SBL	SBT	SBR
Lane Configurations		++	*f*	'i'i	++		'ft	tttt*		'i'i	tttfc	
Traffic Volume (veh/h)	274	164	65	58	69	238	27	1239	72	95	807	113
Future Volume (veh/h)	274	164	65	58	69	238	27	1239	72	95	807	113
Initial Q (Qb), veh	0	0	0	0	0	0	0	0	0	0	0	0
Ped-Bike Adj(A_pbT)	1.00		1.00	1.00		0.99	1.00		1.00	1.00		1.00
Parking Bus, Adj	1.00	1.00	1.00	1.00	1.00	1.00	1.00	1.00	1.00	1.00	1.00	1.00
Work Zone On Approach		No			No			No			No	
Adj Sat Flow, veh/h/ln	1900	1900	1900	1900	1900	1900	1900	1900	1900	1900	1900	1900
Adj Flow Rate, veh/h	298	178	71	63	75	259	29	1347	78	103	877	123
Peak Hour Factor	0.92	0.92	0.92	0.92	0.92	0.92	0.92	0.92	0.92	0.92	0.92	0.92
Percent Heavy Veh, %	0	0	0	0	0	0	0	0	0	0	0	0
Cap, veh/h	268	692	309	236	400	309	190	2890	167	280	2849	393
Arrive On Green	0.15	0.19	0.19	0.07	0.11	0.11	0.05	0.45	0.45	0.08	0.49	0.49
Sat Flow, veh/h	1810	3610	1610	3510	3610	2794	3510	6367	368	3510	5848	808
Grp Volume(v), veh/h	298	178	71	63	75	259	29	1036	389	103	733	267
Grp Sat Flow(s),veh/h/ln	1810	1805	1610	1755	1805	1397	1755	1634	1833	1755	1634	1753
Q Serve(g_s), s	20.0	5.7	5.0	2.3	2.5	12.3	1.1	19.8	19.8	3.8	12.2	12.4
Cycle Q Clear(g_c), s	20.0	5.7	5.0	2.3	2.5	12.3	1.1	19.8	19.8	3.8	12.2	12.4
Prop In Lane	1.00		1.00	1.00		1.00	1.00		0.20	1.00		0.46
Lane Grp Cap(c), veh/h	268	692	309	236	400	309	190	2225	832	280	2388	854
V/C Ratio(X)	1.11	0.26	0.23	0.27	0.19	0.84	0.15	0.47	0.47	0.37	0.31	0.31
Avail Cap(c_a), veh/h	268	692	309	520	535	414	520	2225	832	520	2388	854
HCM Platoon Ratio	1.00	1.00	1.00	1.00	1.00	1.00	1.00	1.00	1.00	1.00	1.00	1.00
Upstream Filter(I)	1.00	1.00	1.00	1.00	1.00	1.00	1.00	1.00	1.00	0.79	0.79	0.79
Uniform Delay (d), s/veh	57.5	46.4	46.1	59.8	54.5	58.8	60.9	25.5	25.5	58.9	20.9	20.9
Incr Delay (d2), s/veh	88.3	0.2	0.4	0.2	0.2	10.8	0.1	0.7	1.9	0.2	0.3	0.8
Initial Q Delay(d3), s/veh	0.0	0.0	0.0	0.0	0.0	0.0	0.0	0.0	0.0	0.0	0.0	0.0
%ile BackOfQ(50%),veh/ln	15.6	2.5	2.0	1.0	1.1	4.7	0.5	7.5	8.7	1.6	4.5	5.0
Unsig. Movement Delay, s/veh												
LnGrp Delay(d), s/veh	145.8	46.6	46.5	60.0	54.7	69.6	61.0	26.2	27.4	59.1	21.1	21.7
LnGrp LOS	F	D	D	E	D	E	E	C	C	E	C	C
Approach Vol, veh/h		547			397			1454			1103	
Approach Delay, s/veh		100.6			65.3			27.2			24.8	
Approach LOS		F			E			C			C	

Timer - Assigned Phs	1	2	3	4	5	6	7	8
Phs Duration (G+Y+Rc), s	18.3	68.8	15.6	32.4	13.8	73.3	26.5	21.4
Change Period (Y+Rc), s	7.5	7.5	6.5	6.5	6.5	7.5	6.5	6.5
Max Green Setting (Gmax), s	20.0	47.0	20.0	20.0	20.0	48.0	20.0	20.0
Max Q Clear Time (g_c+I1), s	15.8	21.8	4.3	7.7	3.1	14.4	22.0	14.3
Green Ext Time (p_c), s	0.1	6.1	0.1	0.9	0.0	4.1	0.0	0.7

Intersection Summary	
HCM 6th Ctrl Delay, s/veh	42.3
HCM 6th LOS	D

> - ■>< ← < A t / VI 7

Movement	EBL	EBT	EBR	WBL	WBT	WBR	NBL	NBT	NBR	SBL	SBT	SBR
Lane Configurations	*i*i	t +T*		↰	↑↑↑	↱↱	*i*i	f +1*		↰↰	↑↑	↱
Traffic Volume (veh/h)	743	764	19	65	461	520	12	76	50	431	119	380
Future Volume (veh/h)	743	764	19	65	461	520	12	76	50	431	119	380
Initial Q (Qb), veh	0	0	0	0	0	0	0	0	0	0	0	0
Ped-Bike Adj(A_pbT)	1.00		1.00	1.00		1.00	1.00		1.00	1.00		1.00
Parking Bus, Adj	1.00	1.00	1.00	1.00	1.00	1.00	1.00	1.00	1.00	1.00	1.00	1.00
Work Zone On Approach		No			No			No			No	
Adj Sat Flow, veh/h/ln	1900	1900	1900	1900	1900	1900	1900	1900	1900	1900	1900	1900
Adj Flow Rate, veh/h	790	813	20	69	490	553	13	81	53	459	127	404
Peak Hour Factor	0.94	0.94	0.94	0.94	0.94	0.94	0.94	0.94	0.94	0.94	0.94	0.94
Percent Heavy Veh, %	0	0	0	0	0	0	0	0	0	0	0	0
Cap, veh/h	453	1515	37	111	1157	632	97	1136	529	464	1564	697
Arrive On Green	0.13	0.29	0.29	0.06	0.22	0.22	0.03	0.33	0.33	0.13	0.43	0.43
Sat Flow, veh/h	3510	5207	128	1810	5187	2834	3510	3458	1610	3510	3610	1610
Grp Volume(v), veh/h	790	540	293	69	490	553	13	81	53	459	127	404
Grp Sat Flow(s),veh/h/ln	1755	1729	1877	1810	1729	1417	1755	1729	1610	1755	1805	1610
Q Serve(g_s), s	20.0	20.3	20.4	5.8	12.6	29.2	0.6	2.5	3.5	20.2	3.2	29.4
Cycle Q Clear(g_c), s	20.0	20.3	20.4	5.8	12.6	29.2	0.6	2.5	3.5	20.2	3.2	29.4
Prop In Lane	1.00		0.07	1.00		1.00	1.00		1.00	1.00		1.00
Lane Grp Cap(c), veh/h	453	1006	546	111	1157	632	97	1136	529	464	1564	697
V/C Ratio(X)	1.74	0.54	0.54	0.62	0.42	0.87	0.13	0.07	0.10	0.99	0.08	0.58
Avail Cap(c_a), veh/h	453	1006	546	233	1439	786	464	1136	529	464	1564	697
HCM Platoon Ratio	1.00	1.00	1.00	1.00	1.00	1.00	1.00	1.00	1.00	1.00	1.00	1.00
Upstream Filter(I)	0.48	0.48	0.48	0.94	0.94	0.94	1.00	1.00	1.00	1.00	1.00	1.00
Uniform Delay (d), s/veh	67.5	46.2	46.2	71.0	51.7	58.1	73.5	35.8	36.1	67.1	25.8	33.2
Incr Delay (d2), s/veh	339.2	0.2	0.4	2.0	0.2	8.2	0.2	0.1	0.4	38.6	0.1	3.5
Initial Q Delay(d3), s/veh	0.0	0.0	0.0	0.0	0.0	0.0	0.0	0.0	0.0	0.0	0.0	0.0
%ile BackOfQ(50%),veh/ln	30.1	8.6	9.4	2.7	5.4	10.9	0.3	1.1	1.5	11.4	1.4	11.8
Unsig. Movement Delay, s/veh												
LnGrp Delay(d), s/veh	406.7	46.4	46.6	73.0	51.8	66.3	73.8	35.9	36.5	105.7	25.9	36.7
LnGrp LOS	F	D	D	E	D	E	E	D	D	F	C	D
Approach Vol, veh/h		1623			1112			147			990	
Approach Delay, s/veh		221.8			60.3			39.5			67.3	
Approach LOS		F			E			D			E	

Timer - Assigned Phs	1	2	3	4	5	6	7	8
Phs Duration (G+Y+Rc), s	11.8	74.6	27.0	41.6	28.0	58.4	16.5	52.1
Change Period (Y+Rc), s	7.5	7.5	7.0	7.0	7.5	7.5	7.0	7.0
Max Green Setting (Gmax), s	20.5	42.5	20.0	43.0	20.5	42.5	20.0	43.0
Max Q Clear Time (g_c+I1), s	2.6	31.4	22.0	31.2	22.2	5.5	7.8	22.4
Green Ext Time (p_c), s	0.0	1.3	0.0	3.4	0.0	0.7	0.0	3.8

Intersection Summary	
HCM 6th Ctrl Delay, s/veh	129.0
HCM 6th LOS	F



Movement	EBT	EBR	WBL	WBT	NBL	NBR
Lane Configurations	+M	i*	↰	+ft	↰	↱
Traffic Volume (veh/h)	1237	8	89	923	124	220
Future Volume (veh/h)	1237	8	89	923	124	220
Initial Q (Qb), veh	0	0	0	0	0	0
Ped-Bike Adj(A_pbT)		1.00	1.00		1.00	1.00
Parking Bus, Adj	1.00	1.00	1.00	1.00	1.00	1.00
Work Zone On Approach	No			No	No	
Adj Sat Flow, veh/h/ln	1900	1900	1900	1900	1900	1900
Adj Flow Rate, veh/h	1374	0	99	1026	138	244
Peak Hour Factor	0.90	0.90	0.90	0.90	0.90	0.90
Percent Heavy Veh, %	0	0	0	0	0	0
Cap, veh/h	1794		128	2563	654	582
Arrive On Green	0.35	0.00	0.07	0.49	0.36	0.36
Sat Flow, veh/h	5358	1610	1810	5358	1810	1610
Grp Volume(v), veh/h	1374	0	99	1026	138	244
Grp Sat Flow(s),veh/h/ln	1729	1610	1810	1729	1810	1610
Q Serve(g_s), s	21.2	0.0	4.8	11.2	4.7	10.3
Cycle Q Clear(g_c), s	21.2	0.0	4.8	11.2	4.7	10.3
Prop In Lane		1.00	1.00		1.00	1.00
Lane Grp Cap(c), veh/h	1794		128	2563	654	582
V/C Ratio(X)	0.77		0.78	0.40	0.21	0.42
Avail Cap(c_a), veh/h	2017		302	3285	654	582
HCM Platoon Ratio	1.00	1.00	1.00	1.00	1.00	1.00
Upstream Filter(I)	0.53	0.00	1.00	1.00	1.00	1.00
Uniform Delay (d), s/veh	26.2	0.0	41.1	14.4	19.9	21.6
Incr Delay (d2), s/veh	0.9	0.0	7.3	0.1	0.7	2.2
Initial Q Delay(d3), s/veh	0.0	0.0	0.0	0.0	0.0	0.0
%ile BackOfQ(50%),veh/ln	8.5	0.0	2.3	3.8	2.0	3.9
Unsig. Movement Delay, s/veh						
LnGrp Delay(d), s/veh	27.1	0.0	48.5	14.5	20.6	23.8
LnGrp LOS	C		D	B	C	C
Approach Vol, veh/h	1374			1125	382	
Approach Delay, s/veh	27.1			17.5	22.7	
Approach LOS	C			B	C	

Timer - Assigned Phs	2	3	4		8
Phs Duration (G+Y+Rc), s	38.5	13.3	38.1		51.5
Change Period (Y+Rc), s	6.0	7.0	7.0		7.0
Max Green Setting (Gmax), s	20.0	15.0	35.0		57.0
Max Q Clear Time (g_c+I1), s	12.3	6.8	23.2		13.2
Green Ext Time (p_c), s	0.6	0.1	7.9		9.6

Intersection Summary	
HCM 6th Ctrl Delay, s/veh	22.8
HCM 6th LOS	C

Notes

Unsignalized Delay for [EBR] is excluded from calculations of the approach delay and intersection delay.



Movement	EBL	EBT	EBR	WBL	WBT	WBR	NBL	NBT	NBR	SBL	SBT	SBR
Lane Configurations												
Traffic Volume (veh/h)	131	2	79	26	4	30	81	1687	8	15	995	10
Future Volume (veh/h)	131	2	79	26	4	30	81	1687	8	15	995	10
Initial Q (Qb), veh	0	0	0	0	0	0	0	0	0	0	0	0
Ped-Bike Adj(A_pbT)	1.00		1.00	1.00		1.00	1.00		0.98	1.00		1.00
Parking Bus, Adj	1.00	1.00	1.00	1.00	1.00	1.00	1.00	1.00	1.00	1.00	1.00	1.00
Work Zone On Approach		No			No			No			No	
Adj Sat Flow, veh/h/ln	1900	1900	1900	1900	1900	1900	1900	1900	1900	1900	1900	1900
Adj Flow Rate, veh/h	139	2	84	28	4	32	86	1795	9	16	1059	11
Peak Hour Factor	0.94	0.94	0.94	0.94	0.94	0.94	0.94	0.94	0.94	0.94	0.94	0.94
Percent Heavy Veh, %	0	0	0	0	0	0	0	0	0	0	0	0
Cap, veh/h	251	6	237	205	27	218	112	3611	18	32	3355	35
Arrive On Green	0.15	0.15	0.15	0.15	0.15	0.15	0.06	0.68	0.68	0.02	0.63	0.63
Sat Flow, veh/h	1394	38	1578	1332	182	1456	1810	5326	27	1810	5293	55
Grp Volume(v), veh/h	139	0	86	28	0	36	86	1165	639	16	692	378
Grp Sat Flow(s),veh/h/ln	1394	0	1616	1332	0	1638	1810	1729	1894	1810	1729	1890
Q Serve(g_s), s	10.1	0.0	5.0	2.0	0.0	2.0	4.9	17.2	17.2	0.9	9.6	9.6
Cycle Q Clear(g_c), s	12.1	0.0	5.0	7.0	0.0	2.0	4.9	17.2	17.2	0.9	9.6	9.6
Prop In Lane	1.00		0.98	1.00		0.89	1.00		0.01	1.00		0.03
Lane Grp Cap(c), veh/h	251	0	242	205	0	245	112	2345	1285	32	2192	1198
V/C Ratio(X)	0.55	0.00	0.36	0.14	0.00	0.15	0.77	0.50	0.50	0.50	0.32	0.32
Avail Cap(c_a), veh/h	451	0	474	396	0	480	224	2345	1285	224	2192	1198
HCM Platoon Ratio	1.00	1.00	1.00	1.00	1.00	1.00	1.00	1.00	1.00	1.00	1.00	1.00
Upstream Filter(I)	1.00	0.00	1.00	1.00	0.00	1.00	0.66	0.66	0.66	1.00	1.00	1.00
Uniform Delay (d), s/veh	44.1	0.0	40.1	43.2	0.0	38.8	48.5	8.2	8.2	51.1	8.8	8.8
Incr Delay (d2), s/veh	4.0	0.0	1.9	0.6	0.0	0.6	14.2	0.5	0.9	23.3	0.4	0.7
Initial Q Delay(d3), s/veh	0.0	0.0	0.0	0.0	0.0	0.0	0.0	0.0	0.0	0.0	0.0	0.0
%ile BackOfQ(50%),veh/ln	3.8	0.0	2.1	0.7	0.0	0.9	2.6	5.1	5.7	0.6	3.1	3.5
Unsig. Movement Delay, s/veh												
LnGrp Delay(d), s/veh	48.1	0.0	42.0	43.9	0.0	39.4	62.7	8.7	9.1	74.4	9.2	9.5
LnGrp LOS	D		D	D		D	E	A	A	E	A	A
Approach Vol, veh/h		225			64			1890			1086	
Approach Delay, s/veh		45.8			41.3			11.3			10.2	
Approach LOS		D			D			B			B	

Timer - Assigned Phs	1	2		4	5	6		8
Phs Duration (G+Y+Rc), s	5.9	77.2		21.9	10.5	72.6		21.9
Change Period (Y+Rc), s	4.0	6.0		6.2	4.0	6.0		6.2
Max Green Setting (Gmax), s	13.0	45.0		30.8	13.0	45.0		30.8
Max Q Clear Time (g_c+I1), s	12.1	19.2		14.1	6.9	11.6		9.0
Green Ext Time (p_c), s	0.0	20.7		1.6	0.2	14.5		0.4

Intersection Summary		
HCM 6th Ctrl Delay, s/veh		13.9
HCM 6th LOS		B

> - ■>< ← < A t / VI 7

Movement	EBL	EBT	EBR	WBL	WBT	WBR	NBL	NBT	NBR	SBL	SBT	SBR
Lane Configurations	*i*i	ttt	i*	↰↰	++	f	*i*i	ttt	i*	*i*i	+++	↱
Traffic Volume (veh/h)	365	515	168	85	278	171	168	1304	106	158	783	128
Future Volume (veh/h)	365	515	168	85	278	171	168	1304	106	158	783	128
Initial Q (Qb), veh	0	0	0	0	0	0	0	0	0	0	0	0
Ped-Bike Adj(A_pbT)	1.00		1.00	1.00		1.00	1.00		1.00	1.00		1.00
Parking Bus, Adj	1.00	1.00	1.00	1.00	1.00	1.00	1.00	1.00	1.00	1.00	1.00	1.00
Work Zone On Approach		No			No			No			No	
Adj Sat Flow, veh/h/ln	1900	1900	1900	1900	1900	1900	1900	1900	1900	1900	1900	1900
Adj Flow Rate, veh/h	397	560	183	92	302	186	183	1417	115	172	851	139
Peak Hour Factor	0.92	0.92	0.92	0.92	0.92	0.92	0.92	0.92	0.92	0.92	0.92	0.92
Percent Heavy Veh, %	0	0	0	0	0	0	0	0	0	0	0	0
Cap, veh/h	351	1081	335	150	545	243	248	2517	781	236	2500	773
Arrive On Green	0.10	0.21	0.21	0.04	0.15	0.15	0.07	0.49	0.49	0.07	0.48	0.48
Sat Flow, veh/h	3510	5187	1608	3510	3610	1610	3510	5187	1609	3510	5187	1603
Grp Volume(v), veh/h	397	560	183	92	302	186	183	1417	115	172	851	139
Grp Sat Flow(s),veh/h/ln	1755	1729	1608	1755	1805	1610	1755	1729	1609	1755	1729	1603
Q Serve(g_s), s	11.0	10.5	11.2	2.8	8.5	12.2	5.6	21.3	4.4	5.3	11.2	5.4
Cycle Q Clear(g_c), s	11.0	10.5	11.2	2.8	8.5	12.2	5.6	21.3	4.4	5.3	11.2	5.4
Prop In Lane	1.00		1.00	1.00		1.00	1.00		1.00	1.00		1.00
Lane Grp Cap(c), veh/h	351	1081	335	150	545	243	248	2517	781	236	2500	773
V/C Ratio(X)	1.13	0.52	0.55	0.61	0.55	0.76	0.74	0.56	0.15	0.73	0.34	0.18
Avail Cap(c_a), veh/h	351	1575	488	351	1096	489	351	2517	781	351	2500	773
HCM Platoon Ratio	1.00	1.00	1.00	1.00	1.00	1.00	1.00	1.00	1.00	1.00	1.00	1.00
Upstream Filter(I)	1.00	1.00	1.00	1.00	1.00	1.00	1.00	1.00	1.00	0.95	0.95	0.95
Uniform Delay (d), s/veh	49.5	38.6	38.9	51.8	43.3	44.8	50.1	20.1	15.7	50.3	17.7	16.2
Incr Delay (d2), s/veh	88.4	0.4	1.4	4.0	0.9	5.0	4.9	0.9	0.4	4.0	0.4	0.5
Initial Q Delay(d3), s/veh	0.0	0.0	0.0	0.0	0.0	0.0	0.0	0.0	0.0	0.0	0.0	0.0
%ile BackOfQ(50%),veh/ln	9.0	4.3	4.4	1.3	3.8	5.0	2.5	8.0	1.6	2.4	4.2	2.0
Unsig. Movement Delay, s/veh												
LnGrp Delay(d), s/veh	137.9	39.0	40.3	55.8	44.1	49.8	55.1	21.0	16.1	54.3	18.0	16.6
LnGrp LOS	F	D	D	E	D	D	E	C	B	D	B	B
Approach Vol, veh/h		1140			580			1715			1162	
Approach Delay, s/veh		73.7			47.8			24.3			23.2	
Approach LOS		E			D			C			C	

Timer - Assigned Phs	1	2	3	4	5	6	7	8
Phs Duration (G+Y+Rc), s	11.4	60.4	8.7	29.5	11.8	60.0	15.0	23.2
Change Period (Y+Rc), s	4.0	7.0	4.0	* 6.6	4.0	7.0	4.0	* 6.6
Max Green Setting (Gmax), s	7.0	33.0	11.0	* 33	11.0	33.0	11.0	* 33
Max Q Clear Time (g_c+I1), s	7.3	23.3	4.8	13.2	7.6	13.2	13.0	14.2
Green Ext Time (p_c), s	0.2	6.1	0.1	4.0	0.2	5.6	0.0	2.2

Intersection Summary	
HCM 6th Ctrl Delay, s/veh	39.2
HCM 6th LOS	D

Notes

* HCM 6th computational engine requires equal clearance times for the phases crossing the barrier.

> - ■>< ← < A t MJ 7

Movement	EBL	EBT	EBR	WBL	WBT	WBR	NBL	NBT	NBR	SBL	SBT	SBR
Lane Configurations	'i's	+++	r	'i's	+++	f	Vi	tttt	f	Vi	ttti*	
Traffic Volume (veh/h)	299	949	304	329	592	202	239	1106	346	331	839	87
Future Volume (veh/h)	299	949	304	329	592	202	239	1106	346	331	839	87
Initial Q (Qb), veh	0	0	0	0	0	0	0	0	0	0	0	0
Ped-Bike Adj(A_pbT)	1.00		0.98	1.00		0.99	1.00		0.98	1.00		1.00
Parking Bus, Adj	1.00	1.00	1.00	1.00	1.00	1.00	1.00	1.00	1.00	1.00	1.00	1.00
Work Zone On Approach		No			No			No			No	
Adj Sat Flow, veh/h/ln	1900	1900	1900	1900	1900	1900	1900	1900	1900	1900	1900	1900
Adj Flow Rate, veh/h	322	1020	327	354	637	217	257	1189	372	356	902	94
Peak Hour Factor	0.93	0.93	0.93	0.93	0.93	0.93	0.93	0.93	0.93	0.93	0.93	0.93
Percent Heavy Veh, %	0	0	0	0	0	0	0	0	0	0	0	0
Cap, veh/h	365	1556	476	395	1601	494	301	1952	473	397	1976	204
Arrive On Green	0.10	0.30	0.30	0.11	0.31	0.31	0.09	0.30	0.30	0.11	0.33	0.33
Sat Flow, veh/h	3510	5187	1585	3510	5187	1601	3510	6536	1583	3510	6064	625
Grp Volume(v), veh/h	322	1020	327	354	637	217	257	1189	372	356	727	269
Grp Sat Flow(s),veh/h/ln	1755	1729	1585	1755	1729	1601	1755	1634	1583	1755	1634	1787
Q Serve(g_s), s	14.9	28.3	30.0	16.4	16.0	17.9	11.9	25.7	35.5	16.5	19.4	19.7
Cycle Q Clear(g_c), s	14.9	28.3	30.0	16.4	16.0	17.9	11.9	25.7	35.5	16.5	19.4	19.7
Prop In Lane	1.00		1.00	1.00		1.00	1.00		1.00	1.00		0.35
Lane Grp Cap(c), veh/h	365	1556	476	395	1601	494	301	1952	473	397	1597	582
V/C Ratio(X)	0.88	0.66	0.69	0.90	0.40	0.44	0.85	0.61	0.79	0.90	0.46	0.46
Avail Cap(c_a), veh/h	436	1556	476	436	1601	494	426	1952	473	426	1597	582
HCM Platoon Ratio	1.00	1.00	1.00	1.00	1.00	1.00	1.00	1.00	1.00	1.00	1.00	1.00
Upstream Filter(I)	1.00	1.00	1.00	1.00	1.00	1.00	0.89	0.89	0.89	1.00	1.00	1.00
Uniform Delay (d), s/veh	72.9	50.3	50.9	72.3	44.9	45.6	74.4	49.6	53.0	72.2	44.0	44.1
Incr Delay (d2), s/veh	15.0	2.2	7.9	18.3	0.7	2.8	7.6	1.3	11.2	19.6	0.9	2.6
Initial Q Delay(d3), s/veh	0.0	0.0	0.0	0.0	0.0	0.0	0.0	0.0	0.0	0.0	0.0	0.0
%ile BackOfQ(50%),veh/ln	7.3	12.2	12.6	8.2	6.8	7.3	5.6	10.5	15.2	8.4	7.9	9.0
Unsig. Movement Delay, s/veh												
LnGrp Delay(d), s/veh	87.9	52.5	58.8	90.6	45.7	48.4	82.0	50.9	64.2	91.8	45.0	46.8
LnGrp LOS	F	D	E	F	D	D	F	D	E	F	D	D
Approach Vol, veh/h		1669			1208			1818			1352	
Approach Delay, s/veh		60.6			59.3			58.0			57.7	
Approach LOS		E			E			E			E	

Timer - Assigned Phs	1	2	3	4	5	6	7	8
Phs Duration (G+Y+Rc), s	25.6	56.3	26.1	57.0	21.2	60.8	24.6	58.4
Change Period (Y+Rc), s	7.0	7.0	7.5	7.5	7.0	7.0	7.5	7.5
Max Green Setting (Gmax), s	20.6	46.0	20.5	49.5	20.0	46.0	20.5	49.5
Max Q Clear Time (g_c+I1), s	18.5	37.5	18.4	32.0	13.9	21.7	16.9	19.9
Green Ext Time (p_c), s	0.1	5.8	0.2	7.0	0.2	7.6	0.2	4.7

Intersection Summary	
HCM 6th Ctrl Delay, s/veh	58.9
HCM 6th LOS	E



Movement	EBL	EBT	EBR	WBL	WBT	WBR	NBL	NBT	NBR	SBL	SBT	SBR
Lane Configurations	fl	++	r	fl	++	r	'i'i	tttt	r	'i'i	tttt	r
Traffic Volume (veh/h)	330	102	147	108	72	95	152	1272	103	158	892	128
Future Volume (veh/h)	330	102	147	108	72	95	152	1272	103	158	892	128
Initial Q (Qb), veh	0	0	0	0	0	0	0	0	0	0	0	0
Ped-Bike Adj(A_pbT)	1.00		1.00	1.00		1.00	1.00		1.00	1.00		1.00
Parking Bus, Adj	1.00	1.00	1.00	1.00	1.00	1.00	1.00	1.00	1.00	1.00	1.00	1.00
Work Zone On Approach		No			No			No			No	
Adj Sat Flow, veh/h/ln	1900	1900	1900	1900	1900	1900	1900	1900	1900	1900	1900	1900
Adj Flow Rate, veh/h	363	112	0	119	79	0	167	1398	0	174	980	0
Peak Hour Factor	0.91	0.91	0.91	0.91	0.91	0.91	0.91	0.91	0.91	0.91	0.91	0.91
Percent Heavy Veh, %	0	0	0	0	0	0	0	0	0	0	0	0
Cap, veh/h	419	537		216	327		221	3520		228	3534	
Arrive On Green	0.12	0.15	0.00	0.06	0.09	0.00	0.06	0.54	0.00	0.07	0.54	0.00
Sat Flow, veh/h	3510	3610	1610	3510	3610	1610	3510	6536	1610	3510	6536	1610
Grp Volume(v), veh/h	363	112	0	119	79	0	167	1398	0	174	980	0
Grp Sat Flow(s),veh/h/ln	1755	1805	1610	1755	1805	1610	1755	1634	1610	1755	1634	1610
Q Serve(g_s), s	14.7	4.0	0.0	4.8	2.9	0.0	6.8	18.2	0.0	7.1	11.7	0.0
Cycle Q Clear(g_c), s	14.7	4.0	0.0	4.8	2.9	0.0	6.8	18.2	0.0	7.1	11.7	0.0
Prop In Lane	1.00		1.00	1.00		1.00	1.00		1.00	1.00		1.00
Lane Grp Cap(c), veh/h	419	537		216	327		221	3520		228	3534	
V/C Ratio(X)	0.87	0.21		0.55	0.24		0.76	0.40		0.76	0.28	
Avail Cap(c_a), veh/h	496	1033		496	1033		484	3520		484	3534	
HCM Platoon Ratio	1.00	1.00	1.00	1.00	1.00	1.00	1.00	1.00	1.00	1.00	1.00	1.00
Upstream Filter(I)	1.00	1.00	0.00	1.00	1.00	0.00	0.91	0.91	0.00	0.79	0.79	0.00
Uniform Delay (d), s/veh	62.7	54.2	0.0	66.1	61.3	0.0	66.8	19.6	0.0	66.7	18.0	0.0
Incr Delay (d2), s/veh	13.6	0.2	0.0	2.2	0.5	0.0	4.8	0.3	0.0	4.2	0.2	0.0
Initial Q Delay(d3), s/veh	0.0	0.0	0.0	0.0	0.0	0.0	0.0	0.0	0.0	0.0	0.0	0.0
%ile BackOfQ(50%),veh/ln	7.4	1.8	0.0	2.2	1.4	0.0	3.1	6.7	0.0	3.2	4.3	0.0
Unsig. Movement Delay, s/veh												
LnGrp Delay(d), s/veh	76.3	54.5	0.0	68.3	61.7	0.0	71.6	19.9	0.0	70.8	18.1	0.0
LnGrp LOS	E	D		E	E		E	B		E	B	
Approach Vol, veh/h		475			198			1565			1154	
Approach Delay, s/veh		71.1			65.7			25.5			26.1	
Approach LOS		E			E			C			C	

Timer - Assigned Phs	1	2	3	4	5	6	7	8
Phs Duration (G+Y+Rc), s	16.4	85.1	15.4	28.1	16.1	85.4	23.8	19.7
Change Period (Y+Rc), s	7.0	7.0	6.5	6.5	7.0	7.0	6.5	6.5
Max Green Setting (Gmax), s	20.0	36.0	20.5	41.5	20.0	36.0	20.5	41.5
Max Q Clear Time (g_c+I1), s	9.1	20.2	6.8	6.0	8.8	13.7	16.7	4.9
Green Ext Time (p_c), s	0.4	9.1	0.3	0.9	0.3	7.5	0.6	0.6

Intersection Summary	
HCM 6th Ctrl Delay, s/veh	34.4
HCM 6th LOS	C

Notes

Unsignalized Delay for [NBR, EBR, WBR, SBR] is excluded from calculations of the approach delay and intersection delay.



Movement	EBL	EBT	EBR	WBL	WBT	WBR	NBL	NBT	NBR	SBL	SBT	SBR
Lane Configurations	fl	++	r	fl	++	r	'i'i	tttt	r	'i'i	tttt	r
Traffic Volume (veh/h)	230	217	298	176	80	80	264	1299	250	91	1197	81
Future Volume (veh/h)	230	217	298	176	80	80	264	1299	250	91	1197	81
Initial Q (Qb), veh	0	0	0	0	0	0	0	0	0	0	0	0
Ped-Bike Adj(A_pbT)	1.00		1.00	1.00		1.00	1.00		1.00	1.00		1.00
Parking Bus, Adj	1.00	1.00	1.00	1.00	1.00	1.00	1.00	1.00	1.00	1.00	1.00	1.00
Work Zone On Approach		No			No			No			No	
Adj Sat Flow, veh/h/ln	1900	1900	1900	1900	1900	1900	1900	1900	1900	1900	1900	1900
Adj Flow Rate, veh/h	245	231	0	187	85	0	281	1382	0	97	1273	0
Peak Hour Factor	0.94	0.94	0.94	0.94	0.94	0.94	0.94	0.94	0.94	0.94	0.94	0.94
Percent Heavy Veh, %	0	0	0	0	0	0	0	0	0	0	0	0
Cap, veh/h	296	430		260	393		329	3541		203	3305	
Arrive On Green	0.08	0.12	0.00	0.07	0.11	0.00	0.09	0.54	0.00	0.06	0.51	0.00
Sat Flow, veh/h	3510	3610	1610	3510	3610	1610	3510	6536	1610	3510	6536	1610
Grp Volume(v), veh/h	245	231	0	187	85	0	281	1382	0	97	1273	0
Grp Sat Flow(s),veh/h/ln	1755	1805	1610	1755	1805	1610	1755	1634	1610	1755	1634	1610
Q Serve(g_s), s	9.3	8.1	0.0	7.0	2.9	0.0	10.6	16.6	0.0	3.6	16.1	0.0
Cycle Q Clear(g_c), s	9.3	8.1	0.0	7.0	2.9	0.0	10.6	16.6	0.0	3.6	16.1	0.0
Prop In Lane	1.00		1.00	1.00		1.00	1.00		1.00	1.00		1.00
Lane Grp Cap(c), veh/h	296	430		260	393		329	3541		203	3305	
V/C Ratio(X)	0.83	0.54		0.72	0.22		0.85	0.39		0.48	0.39	
Avail Cap(c_a), veh/h	364	1177		364	1177		338	3541		260	3305	
HCM Platoon Ratio	1.00	1.00	1.00	1.00	1.00	1.00	1.00	1.00	1.00	1.00	1.00	1.00
Upstream Filter(I)	1.00	1.00	0.00	1.00	1.00	0.00	0.85	0.85	0.00	0.97	0.97	0.00
Uniform Delay (d), s/veh	60.8	56.0	0.0	61.1	54.9	0.0	60.3	18.0	0.0	61.6	20.5	0.0
Incr Delay (d2), s/veh	10.2	0.8	0.0	1.8	0.2	0.0	15.1	0.3	0.0	0.6	0.3	0.0
Initial Q Delay(d3), s/veh	0.0	0.0	0.0	0.0	0.0	0.0	0.0	0.0	0.0	0.0	0.0	0.0
%ile BackOfQ(50%),veh/ln	4.5	3.7	0.0	3.2	1.3	0.0	5.3	5.9	0.0	1.6	5.9	0.0
Unsig. Movement Delay, s/veh												
LnGrp Delay(d), s/veh	71.0	56.7	0.0	63.0	55.1	0.0	75.4	18.3	0.0	62.3	20.8	0.0
LnGrp LOS	E	E		E	E		E	B		E	C	
Approach Vol, veh/h		476			272			1663			1370	
Approach Delay, s/veh		64.1			60.5			27.9			23.8	
Approach LOS		E			E			C			C	

Timer - Assigned Phs	1	2	3	4	5	6	7	8
Phs Duration (G+Y+Rc), s	14.8	80.1	17.0	23.1	19.7	75.3	18.4	21.7
Change Period (Y+Rc), s	7.0	7.0	7.0	7.0	7.0	7.0	7.0	7.0
Max Green Setting (Gmax), s	10.0	39.0	14.0	44.0	13.0	36.0	14.0	44.0
Max Q Clear Time (g_c+I1), s	5.6	18.6	9.0	10.1	12.6	18.1	11.3	4.9
Green Ext Time (p_c), s	0.0	9.1	0.1	1.1	0.0	7.8	0.1	0.4

Intersection Summary	
HCM 6th Ctrl Delay, s/veh	33.3
HCM 6th LOS	C

Notes

Unsignalized Delay for [NBR, EBR, WBR, SBR] is excluded from calculations of the approach delay and intersection delay.

> - ■>< ← < A t MJ 7

Movement	EBL	EBT	EBR	WBL	WBT	WBR	NBL	NBT	NBR	SBL	SBT	SBR
Lane Configurations	Vi	↑	f	vs	++	r	's'i	tttt	r	's'i	tttt	↱
Traffic Volume (veh/h)	695	179	390	217	211	37	239	902	375	248	889	436
Future Volume (veh/h)	695	179	390	217	211	37	239	902	375	248	889	436
Initial Q (Qb), veh	0	0	0	0	0	0	0	0	0	0	0	0
Ped-Bike Adj(A_pbT)	1.00		1.00	1.00		1.00	1.00		0.99	1.00		1.00
Parking Bus, Adj	1.00	1.00	1.00	1.00	1.00	1.00	1.00	1.00	1.00	1.00	1.00	1.00
Work Zone On Approach		No			No			No			No	
Adj Sat Flow, veh/h/ln	1900	1900	1900	1900	1900	1900	1900	1900	1900	1900	1900	1900
Adj Flow Rate, veh/h	716	185	402	224	218	38	246	930	387	256	916	449
Peak Hour Factor	0.97	0.97	0.97	0.97	0.97	0.97	0.97	0.97	0.97	0.97	0.97	0.97
Percent Heavy Veh, %	0	0	0	0	0	0	0	0	0	0	0	0
Cap, veh/h	920	502	425	387	406	181	299	2527	796	306	2540	1048
Arrive On Green	0.26	0.26	0.26	0.11	0.11	0.11	0.09	0.39	0.39	0.09	0.39	0.39
Sat Flow, veh/h	3510	1900	1610	3510	3610	1610	3510	6536	1600	3510	6536	1610
Grp Volume(v), veh/h	716	185	402	224	218	38	246	930	387	256	916	449
Grp Sat Flow(s),veh/h/ln	1755	1900	1610	1755	1805	1610	1755	1634	1600	1755	1634	1610
Q Serve(g_s), s	27.4	11.5	35.5	8.8	8.3	3.1	10.0	14.8	23.3	10.4	14.4	19.6
Cycle Q Clear(g_c), s	27.4	11.5	35.5	8.8	8.3	3.1	10.0	14.8	23.3	10.4	14.4	19.6
Prop In Lane	1.00		1.00	1.00		1.00	1.00		1.00	1.00		1.00
Lane Grp Cap(c), veh/h	920	502	425	387	406	181	299	2527	796	306	2540	1048
V/C Ratio(X)	0.78	0.37	0.95	0.58	0.54	0.21	0.82	0.37	0.49	0.84	0.36	0.43
Avail Cap(c_a), veh/h	920	563	477	387	523	233	629	2527	796	436	2540	1048
HCM Platoon Ratio	1.00	1.00	1.00	1.00	1.00	1.00	1.00	1.00	1.00	1.00	1.00	1.00
Upstream Filter(I)	1.00	1.00	1.00	1.00	1.00	1.00	0.94	0.94	0.94	0.93	0.93	0.93
Uniform Delay (d), s/veh	49.6	43.5	52.3	61.3	60.8	58.5	65.3	31.8	24.2	65.2	31.5	12.3
Incr Delay (d2), s/veh	6.5	0.2	25.4	6.2	0.4	0.2	2.1	0.4	2.0	6.2	0.4	1.2
Initial Q Delay(d3), s/veh	0.0	0.0	0.0	0.0	0.0	0.0	0.0	0.0	0.0	0.0	0.0	0.0
%ile BackOfQ(50%),veh/ln	12.8	5.5	17.1	4.2	3.8	1.3	4.5	5.7	9.1	4.8	5.6	7.0
Unsig. Movement Delay, s/veh												
LnGrp Delay(d), s/veh	56.0	43.7	77.8	67.5	61.2	58.7	67.3	32.2	26.2	71.4	31.9	13.5
LnGrp LOS	E	D	E	E	E	E	E	C	C	E	C	B
Approach Vol, veh/h		1303			480			1563			1621	
Approach Delay, s/veh		61.0			63.9			36.2			33.0	
Approach LOS		E			E			D			C	

Timer - Assigned Phs	1	2	3	4	5	6	7	8
Phs Duration (G+Y+Rc), s	17.6	62.1	21.0	44.3	17.3	62.4	43.0	22.3
Change Period (Y+Rc), s	5.0	6.0	5.0	6.0	5.0	6.0	5.0	6.0
Max Green Setting (Gmax), s	18.6	46.0	16.0	43.0	26.0	38.0	38.0	21.0
Max Q Clear Time (g_c+I1), s	12.4	25.3	10.8	37.5	12.0	21.6	29.4	10.3
Green Ext Time (p_c), s	0.2	4.5	0.2	0.8	0.3	4.3	1.1	0.6

Intersection Summary	
HCM 6th Ctrl Delay, s/veh	44.4
HCM 6th LOS	D

Notes

User approved pedestrian interval to be less than phase max green.



Movement	EBL	EBR	NBL	NBT	SBT	SBR
Lane Configurations						
Traffic Volume (veh/h)	296	309	454	1220	1019	478
Future Volume (veh/h)	296	309	454	1220	1019	478
Initial Q (Qb), veh	0	0	0	0	0	0
Ped-Bike Adj(A_pbT)	1.00	1.00	1.00			1.00
Parking Bus, Adj	1.00	1.00	1.00	1.00	1.00	1.00
Work Zone On Approach	No			No	No	
Adj Sat Flow, veh/h/ln	1900	1900	1900	1900	1900	1900
Adj Flow Rate, veh/h	315	329	483	1298	1084	509
Peak Hour Factor	0.94	0.94	0.94	0.94	0.94	0.94
Percent Heavy Veh, %	0	0	0	0	0	0
Cap, veh/h	1255	830	554	3584	2335	1151
Arrive On Green	0.36	0.36	0.16	0.55	0.36	0.36
Sat Flow, veh/h	3510	1610	3510	6802	6802	1610
Grp Volume(v), veh/h	315	329	483	1298	1084	509
Grp Sat Flow(s),veh/h/ln	1755	1610	1755	1634	1634	1610
Q Serve(g_s), s	7.6	14.9	16.1	13.4	15.3	15.8
Cycle Q Clear(g_c), s	7.6	14.9	16.1	13.4	15.3	15.8
Prop In Lane	1.00	1.00	1.00			1.00
Lane Grp Cap(c), veh/h	1255	830	554	3584	2335	1151
V/C Ratio(X)	0.25	0.40	0.87	0.36	0.46	0.44
Avail Cap(c_a), veh/h	1255	830	1053	3584	2335	1151
HCM Platoon Ratio	1.00	1.00	1.00	1.00	1.00	1.00
Upstream Filter(I)	1.00	1.00	0.85	0.85	0.86	0.86
Uniform Delay (d), s/veh	27.2	17.7	49.4	15.3	29.7	7.1
Incr Delay (d2), s/veh	0.5	1.4	1.5	0.2	0.6	1.1
Initial Q Delay(d3), s/veh	0.0	0.0	0.0	0.0	0.0	0.0
%ile BackOfQ(50%),veh/ln	8.2	16.6	6.9	4.6	5.8	13.5
Unsig. Movement Delay, s/veh						
LnGrp Delay(d), s/veh	27.7	19.1	50.8	15.5	30.3	8.2
LnGrp LOS	C	B	D	B	C	A
Approach Vol, veh/h	644			1781	1593	
Approach Delay, s/veh	23.3			25.1	23.2	
Approach LOS	C			C	C	

Timer - Assigned Phs		2		4	5	6
Phs Duration (G+Y+Rc), s		72.0		48.0	22.9	49.1
Change Period (Y+Rc), s		6.2		5.1	4.0	6.2
Max Green Setting (Gmax), s		65.8		42.9	36.0	25.8
Max Q Clear Time (g_c+I1), s		15.4		16.9	18.1	17.8
Green Ext Time (p_c), s		6.4		1.2	0.8	3.6

Intersection Summary		
HCM 6th Ctrl Delay, s/veh		24.1
HCM 6th LOS		C

> - ■>< ← < A t MJ 7

Movement	EBL	EBT	EBR	WBL	WBT	WBR	NBL	NBT	NBR	SBL	SBT	SBR
Lane Configurations	Vs	↟		3+	_r_	!i		tttfc		'i's	M+	?
Traffic Volume (veh/h)	273	23	154	85	21	182	121	1219	123	224	785	318
Future Volume (veh/h)	273	23	154	85	21	182	121	1219	123	224	785	318
Initial Q (Qb), veh	0	0	0	0	0	0	0	0	0	0	0	0
Ped-Bike Adj(A_pbT)	1.00		1.00	1.00		0.98	1.00		1.00	1.00		1.00
Parking Bus, Adj	1.00	1.00	1.00	1.00	1.00	1.00	1.00	1.00	1.00	1.00	1.00	1.00
Work Zone On Approach		No			No			No			No	
Adj Sat Flow, veh/h/ln	1900	1900	1900	1900	1900	1900	1900	1900	1900	1900	1900	1900
Adj Flow Rate, veh/h	294	25	166	91	23	196	130	1311	132	241	844	0
Peak Hour Factor	0.93	0.93	0.93	0.93	0.93	0.93	0.93	0.93	0.93	0.93	0.93	0.93
Percent Heavy Veh, %	0	0	0	0	0	0	0	0	0	0	0	0
Cap, veh/h	354	45	302	130	346	287	152	2861	287	234	2351	
Arrive On Green	0.10	0.21	0.21	0.07	0.18	0.18	0.08	0.47	0.47	0.07	0.45	0.00
Sat Flow, veh/h	3510	215	1428	1810	1900	1578	1810	6081	610	3510	5187	1610
Grp Volume(v), veh/h	294	0	191	91	23	196	130	1056	387	241	844	0
Grp Sat Flow(s),veh/h/ln	1755	0	1643	1810	1900	1578	1810	1634	1789	1755	1729	1610
Q Serve(g_s), s	12.3	0.0	15.6	7.4	1.5	17.4	10.6	21.8	21.9	10.0	15.9	0.0
Cycle Q Clear(g_c), s	12.3	0.0	15.6	7.4	1.5	17.4	10.6	21.8	21.9	10.0	15.9	0.0
Prop In Lane	1.00		0.87	1.00		1.00	1.00		0.34	1.00		1.00
Lane Grp Cap(c), veh/h	354	0	347	130	346	287	152	2306	842	234	2351	
V/C Ratio(X)	0.83	0.00	0.55	0.70	0.07	0.68	0.86	0.46	0.46	1.03	0.36	
Avail Cap(c_a), veh/h	480	0	553	271	665	552	157	2306	842	234	2351	
HCM Platoon Ratio	1.00	1.00	1.00	1.00	1.00	1.00	1.00	1.00	1.00	1.00	1.00	1.00
Upstream Filter(I)	1.00	0.00	1.00	1.00	1.00	1.00	1.00	1.00	1.00	0.86	0.86	0.00
Uniform Delay (d), s/veh	66.2	0.0	52.8	68.1	50.8	57.3	67.8	26.8	26.8	70.0	26.8	0.0
Incr Delay (d2), s/veh	10.2	0.0	1.9	9.4	0.1	4.0	34.9	0.7	1.8	62.5	0.4	0.0
Initial Q Delay(d3), s/veh	0.0	0.0	0.0	0.0	0.0	0.0	0.0	0.0	0.0	0.0	0.0	0.0
%ile BackOfQ(50%),veh/ln	6.1	0.0	6.7	3.8	0.7	7.3	6.3	8.3	9.4	6.4	6.5	0.0
Unsig. Movement Delay, s/veh												
LnGrp Delay(d), s/veh	76.4	0.0	54.7	77.4	50.9	61.3	102.7	27.5	28.6	132.5	27.2	0.0
LnGrp LOS	E		D	E	D	E	F	C	C	F	C	
Approach Vol, veh/h		485			310			1573			1085	
Approach Delay, s/veh		67.9			65.3			34.0			50.5	
Approach LOS		E			E			C			D	

Timer - Assigned Phs	1	2	3	4	5	6	7	8
Phs Duration (G+Y+Rc), s	17.0	77.6	17.3	38.2	19.6	75.0	21.6	33.8
Change Period (Y+Rc), s	7.0	7.0	6.5	6.5	7.0	7.0	6.5	6.5
Max Green Setting (Gmax), s	10.0	40.0	22.5	50.5	13.0	37.0	20.5	52.5
Max Q Clear Time (g_c+I1), s	12.0	23.9	9.4	17.6	12.6	17.9	14.3	19.4
Green Ext Time (p_c), s	0.0	11.1	0.2	1.9	0.0	7.8	0.8	1.3

Intersection Summary	
HCM 6th Ctrl Delay, s/veh	46.7
HCM 6th LOS	D

Notes

Unsignalized Delay for [SBR] is excluded from calculations of the approach delay and intersection delay.



Movement	EBT	EBR	WBL	WBT	NBL	NBR
Lane Configurations	f+T*		*i	+f+	*i*i	r
Traffic Volume (veh/h)	798	95	65	701	85	50
Future Volume (veh/h)	798	95	65	701	85	50
Initial Q (Qb), veh	0	0	0	0	0	0
Ped-Bike Adj(A_pbT)		1.00	1.00		1.00	1.00
Parking Bus, Adj	1.00	1.00	1.00	1.00	1.00	1.00
Work Zone On Approach	No			No	No	
Adj Sat Flow, veh/h/ln	1900	1900	1900	1900	1900	1900
Adj Flow Rate, veh/h	887	106	72	779	94	56
Peak Hour Factor	0.90	0.90	0.90	0.90	0.90	0.90
Percent Heavy Veh, %	0	0	0	0	0	0
Cap, veh/h	1113	132	102	1852	1842	936
Arrive On Green	0.24	0.24	0.06	0.36	0.52	0.52
Sat Flow, veh/h	4869	559	1810	5358	3510	1610
Grp Volume(v), veh/h	652	341	72	779	94	56
Grp Sat Flow(s),veh/h/ln	1729	1799	1810	1729	1755	1610
Q Serve(g_s), s	19.5	19.6	4.3	12.5	1.4	1.7
Cycle Q Clear(g_c), s	19.5	19.6	4.3	12.5	1.4	1.7
Prop In Lane		0.31	1.00		1.00	1.00
Lane Grp Cap(c), veh/h	819	426	102	1852	1842	936
V/C Ratio(X)	0.80	0.80	0.70	0.42	0.05	0.06
Avail Cap(c_a), veh/h	1037	540	362	2924	1842	936
HCM Platoon Ratio	1.00	1.00	1.00	1.00	1.00	1.00
Upstream Filter(I)	1.00	1.00	0.85	0.85	1.00	1.00
Uniform Delay (d), s/veh	39.5	39.5	51.0	26.7	12.8	10.0
Incr Delay (d2), s/veh	3.4	6.7	5.5	0.1	0.1	0.1
Initial Q Delay(d3), s/veh	0.0	0.0	0.0	0.0	0.0	0.0
%ile BackOfQ(50%),veh/ln	8.2	9.0	2.0	4.9	0.6	0.6
Unsig. Movement Delay, s/veh						
LnGrp Delay(d), s/veh	42.9	46.2	56.4	26.9	12.8	10.1
LnGrp LOS	D	D	E	C	B	B
Approach Vol, veh/h	993			851	150	
Approach Delay, s/veh	44.0			29.4	11.8	
Approach LOS	D			C	B	

Timer - Assigned Phs		2	3	4		8
Phs Duration (G+Y+Rc), s		63.7	13.2	33.1		46.3
Change Period (Y+Rc), s		6.0	7.0	7.0		7.0
Max Green Setting (Gmax), s		35.0	22.0	33.0		62.0
Max Q Clear Time (g_c+I1), s		3.7	6.3	21.6		14.5
Green Ext Time (p_c), s		0.4	0.1	4.4		5.5

Intersection Summary	
HCM 6th Ctrl Delay, s/veh	35.4
HCM 6th LOS	D

> - ■>< ← < A t / VI 7

Movement	EBL	EBT	EBR	WBL	WBT	WBR	NBL	NBT	NBR	SBL	SBT	SBR
Lane Configurations	↰↰		↱↱	↰↰		rr	'i'i	tttt	i>	'i'i	+++	↱
Traffic Volume (veh/h)	688	0	472	287	0	382	134	602	425	485	706	445
Future Volume (veh/h)	688	0	472	287	0	382	134	602	425	485	706	445
Initial Q (Qb), veh	0	0	0	0	0	0	0	0	0	0	0	0
Ped-Bike Adj(A_pbT)	1.00		1.00	1.00		1.00	1.00		1.00	1.00		1.00
Parking Bus, Adj	1.00	1.00	1.00	1.00	1.00	1.00	1.00	1.00	1.00	1.00	1.00	1.00
Work Zone On Approach		No			No			No			No	
Adj Sat Flow, veh/h/ln	1900	0	1900	1900	0	1900	1900	1900	1900	1900	1900	1900
Adj Flow Rate, veh/h	748	0	513	312	0	415	146	654	0	527	767	0
Peak Hour Factor	0.92	0.92	0.92	0.92	0.92	0.92	0.92	0.92	0.92	0.92	0.92	0.92
Percent Heavy Veh, %	0	0	0	0	0	0	0	0	0	0	0	0
Cap, veh/h	821	0	0	821	0	0	1256	2525		596	1028	
Arrive On Green	0.23	0.00	0.00	0.23	0.00	0.00	0.36	0.39	0.00	0.17	0.20	0.00
Sat Flow, veh/h	3510	748		3510	312		3510	6536	1610	3510	5187	1610
Grp Volume(v), veh/h	748	48.9		312	32.3		146	654	0	527	767	0
Grp Sat Flow(s),veh/h/ln	1755	D		1755	C		1755	1634	1610	1755	1729	1610
Q Serve(g_s), s	20.7			7.5			2.8	6.8	0.0	14.7	13.9	0.0
Cycle Q Clear(g_c), s	20.7			7.5			2.8	6.8	0.0	14.7	13.9	0.0
Prop In Lane	1.00			1.00			1.00		1.00	1.00		1.00
Lane Grp Cap(c), veh/h	821			821			1256	2525		596	1028	
V/C Ratio(X)	0.91			0.38			0.12	0.26		0.88	0.75	
Avail Cap(c_a), veh/h	913			913			1256	2525		667	1504	
HCM Platoon Ratio	1.00			1.00			1.00	1.00	1.00	1.00	1.00	1.00
Upstream Filter(I)	1.00			1.00			0.79	0.79	0.00	1.00	1.00	0.00
Uniform Delay (d), s/veh	37.3			32.2			21.5	20.9	0.0	40.6	37.7	0.0
Incr Delay (d2), s/veh	11.6			0.1			0.0	0.2	0.0	11.6	4.9	0.0
Initial Q Delay(d3), s/veh	0.0			0.0			0.0	0.0	0.0	0.0	0.0	0.0
%ile BackOfQ(50%),veh/ln	10.0			3.1			1.1	2.4	0.0	6.9	6.0	0.0
Unsig. Movement Delay, s/veh												
LnGrp Delay(d), s/veh	48.9			32.3			21.5	21.1	0.0	52.2	42.7	0.0
LnGrp LOS	D			C			C	C		D	D	
Approach Vol, veh/h								800			1294	
Approach Delay, s/veh								21.2			46.5	
Approach LOS								C			D	

Timer - Assigned Phs	1	2	3		5	6	7
Phs Duration (G+Y+Rc), s	24.0	45.6	30.4		42.8	26.8	30.4
Change Period (Y+Rc), s	7.0	7.0	7.0		7.0	7.0	7.0
Max Green Setting (Gmax), s	19.0	21.0	26.0		11.0	29.0	26.0
Max Q Clear Time (g_c+I1), s	16.7	8.8	9.5		4.8	15.9	22.7
Green Ext Time (p_c), s	0.3	3.1	0.5		0.1	3.8	0.7

Intersection Summary	
HCM 6th Ctrl Delay, s/veh	39.3
HCM 6th LOS	D

Notes

Unsignalized Delay for [NBR, SBR] is excluded from calculations of the approach delay and intersection delay.

> - ■>< ← < A t / VI 7

Movement	EBL	EBT	EBR	WBL	WBT	WBR	NBL	NBT	NBR	SBL	SBT	SBR
Lane Configurations	↰	++	ƒ	'i'i	++	↱↱	'ft	tttt*		'i'i	tttfc	
Traffic Volume (veh/h)	306	124	19	19	54	62	57	792	80	341	952	169
Future Volume (veh/h)	306	124	19	19	54	62	57	792	80	341	952	169
Initial Q (Qb), veh	0	0	0	0	0	0	0	0	0	0	0	0
Ped-Bike Adj(A_pbT)	1.00		1.00	1.00		0.99	1.00		1.00	1.00		1.00
Parking Bus, Adj	1.00	1.00	1.00	1.00	1.00	1.00	1.00	1.00	1.00	1.00	1.00	1.00
Work Zone On Approach		No			No			No			No	
Adj Sat Flow, veh/h/ln	1900	1900	1900	1900	1900	1900	1900	1900	1900	1900	1900	1900
Adj Flow Rate, veh/h	336	136	21	21	59	68	63	870	88	375	1046	186
Peak Hour Factor	0.91	0.91	0.91	0.91	0.91	0.91	0.91	0.91	0.91	0.91	0.91	0.91
Percent Heavy Veh, %	0	0	0	0	0	0	0	0	0	0	0	0
Cap, veh/h	248	616	275	142	267	207	259	2796	279	428	2901	510
Arrive On Green	0.14	0.17	0.17	0.04	0.07	0.07	0.07	0.46	0.46	0.12	0.52	0.52
Sat Flow, veh/h	1810	3610	1610	3510	3610	2791	3510	6084	608	3510	5632	990
Grp Volume(v), veh/h	336	136	21	21	59	68	63	699	259	375	909	323
Grp Sat Flow(s),veh/h/ln	1810	1805	1610	1755	1805	1396	1755	1634	1791	1755	1634	1720
Q Serve(g_s), s	18.5	4.4	1.5	0.8	2.1	3.1	2.3	12.1	12.3	14.2	14.9	15.1
Cycle Q Clear(g_c), s	18.5	4.4	1.5	0.8	2.1	3.1	2.3	12.1	12.3	14.2	14.9	15.1
Prop In Lane	1.00		1.00	1.00		1.00	1.00		0.34	1.00		0.58
Lane Grp Cap(c), veh/h	248	616	275	142	267	207	259	2253	823	428	2525	886
V/C Ratio(X)	1.35	0.22	0.08	0.15	0.22	0.33	0.24	0.31	0.31	0.88	0.36	0.36
Avail Cap(c_a), veh/h	248	616	275	520	575	445	520	2253	823	520	2525	886
HCM Platoon Ratio	1.00	1.00	1.00	1.00	1.00	1.00	1.00	1.00	1.00	1.00	1.00	1.00
Upstream Filter(I)	1.00	1.00	1.00	1.00	1.00	1.00	1.00	1.00	1.00	0.55	0.55	0.55
Uniform Delay (d), s/veh	58.3	48.2	47.0	62.5	58.8	59.3	59.0	23.0	23.1	58.3	19.5	19.5
Incr Delay (d2), s/veh	183.8	0.2	0.1	0.2	0.4	0.9	0.2	0.4	1.0	7.1	0.2	0.6
Initial Q Delay(d3), s/veh	0.0	0.0	0.0	0.0	0.0	0.0	0.0	0.0	0.0	0.0	0.0	0.0
%ile BackOfQ(50%),veh/ln	21.0	2.0	0.6	0.3	0.9	1.1	1.0	4.6	5.2	6.5	5.4	5.9
Unsig. Movement Delay, s/veh												
LnGrp Delay(d), s/veh	242.1	48.4	47.1	62.7	59.2	60.2	59.1	23.4	24.1	65.3	19.7	20.2
LnGrp LOS	F	D	D	E	E	E	E	C	C	E	B	C
Approach Vol, veh/h		493			148			1021			1607	
Approach Delay, s/veh		180.3			60.2			25.7			30.4	
Approach LOS		F			E			C			C	

Timer - Assigned Phs	1	2	3	4	5	6	7	8
Phs Duration (G+Y+Rc), s	24.0	69.5	12.0	29.5	16.5	77.0	25.0	16.5
Change Period (Y+Rc), s	7.5	7.5	6.5	6.5	6.5	7.5	6.5	6.5
Max Green Setting (Gmax), s	20.0	47.0	20.0	20.0	20.0	48.0	18.5	21.5
Max Q Clear Time (g_c+I1), s	16.2	14.3	2.8	6.4	4.3	17.1	20.5	5.1
Green Ext Time (p_c), s	0.3	3.9	0.0	0.6	0.1	5.3	0.0	0.4

Intersection Summary	
HCM 6th Ctrl Delay, s/veh	52.9
HCM 6th LOS	D

> - ■>< ← < A t / VI 7

Movement	EBL	EBT	EBR	WBL	WBT	WBR	NBL	NBT	NBR	SBL	SBT	SBR
Lane Configurations	*i*i	t +T*		↰	↑↑↑	↱↱	*i*i	f +1*		↰↰	↑↑	↱
Traffic Volume (veh/h)	490	334	23	54	344	346	23	93	17	353	238	399
Future Volume (veh/h)	490	334	23	54	344	346	23	93	17	353	238	399
Initial Q (Qb), veh	0	0	0	0	0	0	0	0	0	0	0	0
Ped-Bike Adj(A_pbT)	1.00		1.00	1.00		1.00	1.00		1.00	1.00		1.00
Parking Bus, Adj	1.00	1.00	1.00	1.00	1.00	1.00	1.00	1.00	1.00	1.00	1.00	1.00
Work Zone On Approach		No			No			No			No	
Adj Sat Flow, veh/h/ln	1900	1900	1900	1900	1900	1900	1900	1900	1900	1900	1900	1900
Adj Flow Rate, veh/h	544	371	26	60	382	384	26	103	19	392	264	443
Peak Hour Factor	0.90	0.90	0.90	0.90	0.90	0.90	0.90	0.90	0.90	0.90	0.90	0.90
Percent Heavy Veh, %	0	0	0	0	0	0	0	0	0	0	0	0
Cap, veh/h	453	1151	80	108	845	462	153	1762	309	435	1724	768
Arrive On Green	0.13	0.23	0.23	0.06	0.16	0.16	0.04	0.40	0.40	0.12	0.48	0.48
Sat Flow, veh/h	3510	4953	343	1810	5187	2834	3510	4439	779	3510	3610	1609
Grp Volume(v), veh/h	544	258	139	60	382	384	26	79	43	392	264	443
Grp Sat Flow(s),veh/h/ln	1755	1729	1838	1810	1729	1417	1755	1729	1760	1755	1805	1609
Q Serve(g_s), s	20.0	9.6	9.8	5.0	10.3	20.3	1.1	2.2	2.3	17.1	6.4	30.8
Cycle Q Clear(g_c), s	20.0	9.6	9.8	5.0	10.3	20.3	1.1	2.2	2.3	17.1	6.4	30.8
Prop In Lane	1.00		0.19	1.00		1.00	1.00		0.44	1.00		1.00
Lane Grp Cap(c), veh/h	453	803	427	108	845	462	153	1373	699	435	1724	768
V/C Ratio(X)	1.20	0.32	0.33	0.56	0.45	0.83	0.17	0.06	0.06	0.90	0.15	0.58
Avail Cap(c_a), veh/h	453	959	510	233	1439	786	464	1373	699	464	1724	768
HCM Platoon Ratio	1.00	1.00	1.00	1.00	1.00	1.00	1.00	1.00	1.00	1.00	1.00	1.00
Upstream Filter(I)	0.56	0.56	0.56	0.96	0.96	0.96	1.00	1.00	1.00	1.00	1.00	1.00
Uniform Delay (d), s/veh	67.5	49.3	49.4	70.9	58.6	62.8	71.4	28.8	28.9	67.0	22.8	29.2
Incr Delay (d2), s/veh	102.2	0.1	0.2	1.6	0.3	2.9	0.2	0.1	0.2	18.9	0.2	3.1
Initial Q Delay(d3), s/veh	0.0	0.0	0.0	0.0	0.0	0.0	0.0	0.0	0.0	0.0	0.0	0.0
%ile BackOfQ(50%),veh/ln	15.2	4.1	4.4	2.3	4.5	7.3	0.5	0.9	1.0	8.6	2.7	12.1
Unsig. Movement Delay, s/veh												
LnGrp Delay(d), s/veh	169.7	49.4	49.6	72.5	58.9	65.7	71.6	28.9	29.1	85.9	23.0	32.3
LnGrp LOS	F	D	D	E	E	E	E	C	C	F	C	C
Approach Vol, veh/h		941			826			148			1099	
Approach Delay, s/veh		119.0			63.0			36.5			49.2	
Approach LOS		F			E			D			D	

Timer - Assigned Phs	1	2	3	4	5	6	7	8
Phs Duration (G+Y+Rc), s	14.2	81.5	27.0	32.3	26.7	69.0	16.2	43.0
Change Period (Y+Rc), s	7.5	7.5	7.0	7.0	7.5	7.5	7.0	7.0
Max Green Setting (Gmax), s	20.5	42.5	20.0	43.0	20.5	42.5	20.0	43.0
Max Q Clear Time (g_c+I1), s	13.1	32.8	22.0	22.3	19.1	4.3	7.0	11.8
Green Ext Time (p_c), s	0.0	1.8	0.0	2.9	0.1	0.6	0.0	1.8

Intersection Summary	
HCM 6th Ctrl Delay, s/veh	74.1
HCM 6th LOS	E



Movement	EBT	EBR	WBL	WBT	NBL	NBR
Lane Configurations	+M	i*	↰	+ft	↰	↱
Traffic Volume (veh/h)	599	105	131	671	73	136
Future Volume (veh/h)	599	105	131	671	73	136
Initial Q (Qb), veh	0	0	0	0	0	0
Ped-Bike Adj(A_pbT)		1.00	1.00		1.00	1.00
Parking Bus, Adj	1.00	1.00	1.00	1.00	1.00	1.00
Work Zone On Approach	No			No	No	
Adj Sat Flow, veh/h/ln	1900	1900	1900	1900	1900	1900
Adj Flow Rate, veh/h	666	0	146	746	81	151
Peak Hour Factor	0.90	0.90	0.90	0.90	0.90	0.90
Percent Heavy Veh, %	0	0	0	0	0	0
Cap, veh/h	1046		181	1967	862	767
Arrive On Green	0.20	0.00	0.10	0.38	0.48	0.48
Sat Flow, veh/h	5358	1610	1810	5358	1810	1610
Grp Volume(v), veh/h	666	0	146	746	81	151
Grp Sat Flow(s),veh/h/ln	1729	1610	1810	1729	1810	1610
Q Serve(g_s), s	10.6	0.0	7.1	9.4	2.2	4.9
Cycle Q Clear(g_c), s	10.6	0.0	7.1	9.4	2.2	4.9
Prop In Lane		1.00	1.00		1.00	1.00
Lane Grp Cap(c), veh/h	1046		181	1967	862	767
V/C Ratio(X)	0.64		0.81	0.38	0.09	0.20
Avail Cap(c_a), veh/h	2017		302	3285	862	767
HCM Platoon Ratio	1.00	1.00	1.00	1.00	1.00	1.00
Upstream Filter(I)	0.77	0.00	1.00	1.00	1.00	1.00
Uniform Delay (d), s/veh	32.9	0.0	39.7	20.3	12.9	13.6
Incr Delay (d2), s/veh	0.6	0.0	6.3	0.1	0.2	0.6
Initial Q Delay(d3), s/veh	0.0	0.0	0.0	0.0	0.0	0.0
%ile BackOfQ(50%),veh/ln	4.4	0.0	3.3	3.4	0.8	1.7
Unsig. Movement Delay, s/veh						
LnGrp Delay(d), s/veh	33.5	0.0	45.9	20.4	13.1	14.2
LnGrp LOS	C		D	C	B	B
Approach Vol, veh/h	666			892	232	
Approach Delay, s/veh	33.5			24.6	13.8	
Approach LOS	C			C	B	

Timer - Assigned Phs	2	3	4		8
Phs Duration (G+Y+Rc), s	48.9	16.0	25.1		41.1
Change Period (Y+Rc), s	6.0	7.0	7.0		7.0
Max Green Setting (Gmax), s	20.0	15.0	35.0		57.0
Max Q Clear Time (g_c+I1), s	6.9	9.1	12.6		11.4
Green Ext Time (p_c), s	0.4	0.1	5.6		6.4

Intersection Summary	
HCM 6th Ctrl Delay, s/veh	26.5
HCM 6th LOS	C

Notes

Unsignalized Delay for [EBR] is excluded from calculations of the approach delay and intersection delay.



Movement	EBT	EBR	WBL	WBT	NBL	NBR
Lane Configurations	f+T*		*¡	+f+	*¡*¡	r
Traffic Volume (veh/h)	1483	119	61	792	61	236
Future Volume (veh/h)	1483	119	61	792	61	236
Initial Q (Qb), veh	0	0	0	0	0	0
Ped-Bike Adj(A_pbT)		1.00	1.00		1.00	1.00
Parking Bus, Adj	1.00	1.00	1.00	1.00	1.00	1.00
Work Zone On Approach	No			No	No	
Adj Sat Flow, veh/h/ln	1900	1900	1900	1900	1900	1900
Adj Flow Rate, veh/h	1545	124	64	825	64	246
Peak Hour Factor	0.96	0.96	0.96	0.96	0.96	0.96
Percent Heavy Veh, %	0	0	0	0	0	0
Cap, veh/h	1513	121	99	2217	1595	820
Arrive On Green	0.31	0.31	0.05	0.43	0.45	0.45
Sat Flow, veh/h	5066	393	1810	5358	3510	1610
Grp Volume(v), veh/h	1091	578	64	825	64	246
Grp Sat Flow(s),veh/h/ln	1729	1829	1810	1729	1755	1610
Q Serve(g_s), s	34.0	34.0	3.8	11.9	1.1	9.7
Cycle Q Clear(g_c), s	34.0	34.0	3.8	11.9	1.1	9.7
Prop In Lane		0.21	1.00		1.00	1.00
Lane Grp Cap(c), veh/h	1069	565	99	2217	1595	820
V/C Ratio(X)	1.02	1.02	0.65	0.37	0.04	0.30
Avail Cap(c_a), veh/h	1069	565	345	2924	1595	820
HCM Platoon Ratio	1.00	1.00	1.00	1.00	1.00	1.00
Upstream Filter(I)	1.00	1.00	0.85	0.85	1.00	1.00
Uniform Delay (d), s/veh	38.0	38.0	51.0	21.4	16.7	15.6
Incr Delay (d2), s/veh	32.9	43.5	4.4	0.1	0.0	0.9
Initial Q Delay(d3), s/veh	0.0	0.0	0.0	0.0	0.0	0.0
%ile BackOfQ(50%),veh/ln	18.3	21.0	1.8	4.5	0.5	3.5
Unsig. Movement Delay, s/veh						
LnGrp Delay(d), s/veh	70.9	81.5	55.4	21.5	16.7	16.6
LnGrp LOS	F	F	E	C	B	B
Approach Vol, veh/h	1669			889	310	
Approach Delay, s/veh	74.6			24.0	16.6	
Approach LOS	E			C	B	

Timer - Assigned Phs	2	3	4	8
Phs Duration (G+Y+Rc), s	56.0	13.0	41.0	54.0
Change Period (Y+Rc), s	6.0	7.0	7.0	7.0
Max Green Setting (Gmax), s	35.0	21.0	34.0	62.0
Max Q Clear Time (g_c+I1), s	11.7	5.8	36.0	13.9
Green Ext Time (p_c), s	0.8	0.1	0.0	5.9

Intersection Summary	
HCM 6th Ctrl Delay, s/veh	52.6
HCM 6th LOS	D

> - ■>< ← < A t / VI 7

Movement	EBL	EBT	EBR	WBL	WBT	WBR	NBL	NBT	NBR	SBL	SBT	SBR
Lane Configurations	↰↰		↱↱	↰↰		rr	'i'i	tttt	i>	'i'i	+++	↱
Traffic Volume (veh/h)	562	0	245	158	0	415	501	951	687	334	680	554
Future Volume (veh/h)	562	0	245	158	0	415	501	951	687	334	680	554
Initial Q (Qb), veh	0	0	0	0	0	0	0	0	0	0	0	0
Ped-Bike Adj(A_pbT)	1.00		1.00	1.00		1.00	1.00		1.00	1.00		1.00
Parking Bus, Adj	1.00	1.00	1.00	1.00	1.00	1.00	1.00	1.00	1.00	1.00	1.00	1.00
Work Zone On Approach		No			No			No			No	
Adj Sat Flow, veh/h/ln	1900	0	1900	1900	0	1900	1900	1900	1900	1900	1900	1900
Adj Flow Rate, veh/h	604	0	263	170	0	446	539	1023	0	359	731	0
Peak Hour Factor	0.93	0.93	0.93	0.93	0.93	0.93	0.93	0.93	0.93	0.93	0.93	0.93
Percent Heavy Veh, %	0	0	0	0	0	0	0	0	0	0	0	0
Cap, veh/h	682	0	0	682	0	0	1435	3086		434	970	
Arrive On Green	0.19	0.00	0.00	0.19	0.00	0.00	0.41	0.47	0.00	0.12	0.19	0.00
Sat Flow, veh/h	3510	604		3510	170		3510	6536	1610	3510	5187	1610
Grp Volume(v), veh/h	604	47.6		170	34.2		539	1023	0	359	731	0
Grp Sat Flow(s),veh/h/ln	1755	D		1755	C		1755	1634	1610	1755	1729	1610
Q Serve(g_s), s	16.7			4.1			10.7	9.8	0.0	10.0	13.3	0.0
Cycle Q Clear(g_c), s	16.7			4.1			10.7	9.8	0.0	10.0	13.3	0.0
Prop In Lane	1.00			1.00			1.00		1.00	1.00		1.00
Lane Grp Cap(c), veh/h	682			682			1435	3086		434	970	
V/C Ratio(X)	0.89			0.25			0.38	0.33		0.83	0.75	
Avail Cap(c_a), veh/h	843			913			1435	3086		632	1349	
HCM Platoon Ratio	1.00			1.00			1.00	1.00	1.00	1.00	1.00	1.00
Upstream Filter(I)	1.00			1.00			0.71	0.71	0.00	1.00	1.00	0.00
Uniform Delay (d), s/veh	39.2			34.1			20.7	16.5	0.0	42.8	38.5	0.0
Incr Delay (d2), s/veh	8.4			0.1			0.0	0.2	0.0	3.9	5.4	0.0
Initial Q Delay(d3), s/veh	0.0			0.0			0.0	0.0	0.0	0.0	0.0	0.0
%ile BackOfQ(50%),veh/ln	7.8			1.7			4.0	3.3	0.0	4.3	5.8	0.0
Unsig. Movement Delay, s/veh												
LnGrp Delay(d), s/veh	47.6			34.2			20.7	16.7	0.0	46.7	43.9	0.0
LnGrp LOS	D			C			C	B		D	D	
Approach Vol, veh/h								1562			1090	
Approach Delay, s/veh								18.1			44.8	
Approach LOS								B			D	

Timer - Assigned Phs	1	2	3		5	6	7
Phs Duration (G+Y+Rc), s	19.4	54.2	26.4		47.9	25.7	26.4
Change Period (Y+Rc), s	7.0	7.0	7.0		7.0	7.0	7.0
Max Green Setting (Gmax), s	18.0	22.0	26.0		14.0	26.0	24.0
Max Q Clear Time (g_c+I1), s	12.0	11.8	6.1		12.7	15.3	18.7
Green Ext Time (p_c), s	0.4	4.5	0.3		0.2	3.3	0.7

Intersection Summary	
HCM 6th Ctrl Delay, s/veh	32.6
HCM 6th LOS	C

Notes

Unsignalized Delay for [NBR, SBR] is excluded from calculations of the approach delay and intersection delay.

> - ■>< ← < A t / VI 7

Movement	EBL	EBT	EBR	WBL	WBT	WBR	NBL	NBT	NBR	SBL	SBT	SBR
Lane Configurations		++	*f*	'i'i	++		'ft	tttt*		'i'i	tttfc	
Traffic Volume (veh/h)	274	164	65	58	69	238	27	1625	72	95	873	113
Future Volume (veh/h)	274	164	65	58	69	238	27	1625	72	95	873	113
Initial Q (Qb), veh	0	0	0	0	0	0	0	0	0	0	0	0
Ped-Bike Adj(A_pbT)	1.00		1.00	1.00		0.99	1.00		1.00	1.00		1.00
Parking Bus, Adj	1.00	1.00	1.00	1.00	1.00	1.00	1.00	1.00	1.00	1.00	1.00	1.00
Work Zone On Approach		No			No			No			No	
Adj Sat Flow, veh/h/ln	1900	1900	1900	1900	1900	1900	1900	1900	1900	1900	1900	1900
Adj Flow Rate, veh/h	298	178	71	63	75	259	29	1766	78	103	949	123
Peak Hour Factor	0.92	0.92	0.92	0.92	0.92	0.92	0.92	0.92	0.92	0.92	0.92	0.92
Percent Heavy Veh, %	0	0	0	0	0	0	0	0	0	0	0	0
Cap, veh/h	248	655	292	236	403	312	190	3001	133	280	2939	376
Arrive On Green	0.14	0.18	0.18	0.07	0.11	0.11	0.05	0.46	0.46	0.08	0.50	0.50
Sat Flow, veh/h	1810	3610	1610	3510	3610	2794	3510	6464	286	3510	5908	757
Grp Volume(v), veh/h	298	178	71	63	75	259	29	1339	505	103	785	287
Grp Sat Flow(s),veh/h/ln	1810	1805	1610	1755	1805	1397	1755	1634	1848	1755	1634	1763
Q Serve(g_s), s	18.5	5.7	5.1	2.3	2.5	12.3	1.1	27.2	27.2	3.8	12.9	13.2
Cycle Q Clear(g_c), s	18.5	5.7	5.1	2.3	2.5	12.3	1.1	27.2	27.2	3.8	12.9	13.2
Prop In Lane	1.00		1.00	1.00		1.00	1.00		0.15	1.00		0.43
Lane Grp Cap(c), veh/h	248	655	292	236	403	312	190	2276	858	280	2438	877
V/C Ratio(X)	1.20	0.27	0.24	0.27	0.19	0.83	0.15	0.59	0.59	0.37	0.32	0.33
Avail Cap(c_a), veh/h	248	655	292	520	575	445	520	2276	858	520	2438	877
HCM Platoon Ratio	1.00	1.00	1.00	1.00	1.00	1.00	1.00	1.00	1.00	1.00	1.00	1.00
Upstream Filter(I)	1.00	1.00	1.00	1.00	1.00	1.00	1.00	1.00	1.00	0.74	0.74	0.74
Uniform Delay (d), s/veh	58.3	47.6	47.3	59.8	54.4	58.7	60.9	26.7	26.7	58.9	20.3	20.4
Incr Delay (d2), s/veh	122.8	0.2	0.4	0.2	0.2	8.8	0.1	1.1	3.0	0.2	0.3	0.7
Initial Q Delay(d3), s/veh	0.0	0.0	0.0	0.0	0.0	0.0	0.0	0.0	0.0	0.0	0.0	0.0
%ile BackOfQ(50%),veh/ln	16.8	2.6	2.0	1.0	1.1	4.6	0.5	10.3	12.0	1.6	4.7	5.3
Unsig. Movement Delay, s/veh												
LnGrp Delay(d), s/veh	181.0	47.8	47.7	60.0	54.6	67.5	61.0	27.8	29.6	59.1	20.6	21.1
LnGrp LOS	F	D	D	E	D	E	E	C	C	E	C	C
Approach Vol, veh/h		547			397			1873			1175	
Approach Delay, s/veh		120.4			63.9			28.8			24.1	
Approach LOS		F			E			C			C	

Timer - Assigned Phs	1	2	3	4	5	6	7	8
Phs Duration (G+Y+Rc), s	18.3	70.2	15.6	31.0	13.8	74.7	25.0	21.6
Change Period (Y+Rc), s	7.5	7.5	6.5	6.5	6.5	7.5	6.5	6.5
Max Green Setting (Gmax), s	20.8	47.0	20.0	20.0	20.0	48.0	18.5	21.5
Max Q Clear Time (g_c+I1), s	15.8	29.2	4.3	7.7	3.1	15.2	20.5	14.3
Green Ext Time (p_c), s	0.1	7.6	0.1	0.9	0.0	4.5	0.0	0.8

Intersection Summary	
HCM 6th Ctrl Delay, s/veh	43.4
HCM 6th LOS	D

> - ■>< ← < A t / VI 7

Movement	EBL	EBT	EBR	WBL	WBT	WBR	NBL	NBT	NBR	SBL	SBT	SBR
Lane Configurations	*i*i	t +T*		↰	↑↑↑	↱↱	*i*i	f +1*		↰↰	↑↑	↱
Traffic Volume (veh/h)	936	764	19	65	461	520	12	269	50	464	152	380
Future Volume (veh/h)	936	764	19	65	461	520	12	269	50	464	152	380
Initial Q (Qb), veh	0	0	0	0	0	0	0	0	0	0	0	0
Ped-Bike Adj(A_pbT)	1.00		1.00	1.00		1.00	1.00		1.00	1.00		1.00
Parking Bus, Adj	1.00	1.00	1.00	1.00	1.00	1.00	1.00	1.00	1.00	1.00	1.00	1.00
Work Zone On Approach		No			No			No			No	
Adj Sat Flow, veh/h/ln	1900	1900	1900	1900	1900	1900	1900	1900	1900	1900	1900	1900
Adj Flow Rate, veh/h	996	813	20	69	490	553	13	286	53	494	162	404
Peak Hour Factor	0.94	0.94	0.94	0.94	0.94	0.94	0.94	0.94	0.94	0.94	0.94	0.94
Percent Heavy Veh, %	0	0	0	0	0	0	0	0	0	0	0	0
Cap, veh/h	453	1515	37	111	1157	632	97	1453	260	464	1564	697
Arrive On Green	0.13	0.29	0.29	0.06	0.22	0.22	0.03	0.33	0.33	0.13	0.43	0.43
Sat Flow, veh/h	3510	5207	128	1810	5187	2834	3510	4424	792	3510	3610	1610
Grp Volume(v), veh/h	996	540	293	69	490	553	13	221	118	494	162	404
Grp Sat Flow(s),veh/h/ln	1755	1729	1877	1810	1729	1417	1755	1729	1758	1755	1805	1610
Q Serve(g_s), s	20.0	20.3	20.4	5.8	12.6	29.2	0.6	7.1	7.5	20.5	4.1	29.4
Cycle Q Clear(g_c), s	20.0	20.3	20.4	5.8	12.6	29.2	0.6	7.1	7.5	20.5	4.1	29.4
Prop In Lane	1.00		0.07	1.00		1.00	1.00		0.45	1.00		1.00
Lane Grp Cap(c), veh/h	453	1006	546	111	1157	632	97	1136	577	464	1564	697
V/C Ratio(X)	2.20	0.54	0.54	0.62	0.42	0.87	0.13	0.19	0.20	1.06	0.10	0.58
Avail Cap(c_a), veh/h	453	1006	546	233	1439	786	464	1136	577	464	1564	697
HCM Platoon Ratio	1.00	1.00	1.00	1.00	1.00	1.00	1.00	1.00	1.00	1.00	1.00	1.00
Upstream Filter(I)	0.59	0.59	0.59	0.94	0.94	0.94	1.00	1.00	1.00	1.00	1.00	1.00
Uniform Delay (d), s/veh	67.5	46.2	46.2	71.0	51.7	58.1	73.5	37.3	37.5	67.3	26.1	33.2
Incr Delay (d2), s/veh	543.7	0.3	0.5	2.0	0.2	8.2	0.2	0.4	0.8	59.8	0.1	3.5
Initial Q Delay(d3), s/veh	0.0	0.0	0.0	0.0	0.0	0.0	0.0	0.0	0.0	0.0	0.0	0.0
%ile BackOfQ(50%),veh/ln	48.0	8.6	9.4	2.7	5.4	10.9	0.3	3.1	3.4	12.8	1.8	11.8
Unsig. Movement Delay, s/veh												
LnGrp Delay(d), s/veh	611.2	46.4	46.7	73.0	51.8	66.3	73.8	37.7	38.2	127.1	26.2	36.7
LnGrp LOS	F	D	D	E	D	E	E	D	D	F	C	D
Approach Vol, veh/h		1829			1112			352			1060	
Approach Delay, s/veh		354.1			60.3			39.2			77.2	
Approach LOS		F			E			D			E	

Timer - Assigned Phs	1	2	3	4	5	6	7	8
Phs Duration (G+Y+Rc), s	31.8	74.6	27.0	41.6	28.0	58.4	16.5	52.1
Change Period (Y+Rc), s	7.5	7.5	7.0	7.0	7.5	7.5	7.0	7.0
Max Green Setting (Gmax), s	20.5	42.5	20.0	43.0	20.5	42.5	20.0	43.0
Max Q Clear Time (g_c+I1), s	12.6	31.4	22.0	31.2	22.5	9.5	7.8	22.4
Green Ext Time (p_c), s	0.0	1.4	0.0	3.4	0.0	1.8	0.0	3.8

Intersection Summary	
HCM 6th Ctrl Delay, s/veh	186.2
HCM 6th LOS	F



Movement	EBT	EBR	WBL	WBT	NBL	NBR
Lane Configurations	+M	j*	↰	+ft	↰	↱
Traffic Volume (veh/h)	1237	41	89	923	124	220
Future Volume (veh/h)	1237	41	89	923	124	220
Initial Q (Qb), veh	0	0	0	0	0	0
Ped-Bike Adj(A_pbT)		1.00	1.00		1.00	1.00
Parking Bus, Adj	1.00	1.00	1.00	1.00	1.00	1.00
Work Zone On Approach	No			No	No	
Adj Sat Flow, veh/h/ln	1900	1900	1900	1900	1900	1900
Adj Flow Rate, veh/h	1374	0	99	1026	138	244
Peak Hour Factor	0.90	0.90	0.90	0.90	0.90	0.90
Percent Heavy Veh, %	0	0	0	0	0	0
Cap, veh/h	1794		128	2563	654	582
Arrive On Green	0.35	0.00	0.07	0.49	0.36	0.36
Sat Flow, veh/h	5358	1610	1810	5358	1810	1610
Grp Volume(v), veh/h	1374	0	99	1026	138	244
Grp Sat Flow(s),veh/h/ln	1729	1610	1810	1729	1810	1610
Q Serve(g_s), s	21.2	0.0	4.8	11.2	4.7	10.3
Cycle Q Clear(g_c), s	21.2	0.0	4.8	11.2	4.7	10.3
Prop In Lane		1.00	1.00		1.00	1.00
Lane Grp Cap(c), veh/h	1794		128	2563	654	582
V/C Ratio(X)	0.77		0.78	0.40	0.21	0.42
Avail Cap(c_a), veh/h	2017		302	3285	654	582
HCM Platoon Ratio	1.00	1.00	1.00	1.00	1.00	1.00
Upstream Filter(I)	0.56	0.00	1.00	1.00	1.00	1.00
Uniform Delay (d), s/veh	26.2	0.0	41.1	14.4	19.9	21.6
Incr Delay (d2), s/veh	1.0	0.0	7.3	0.1	0.7	2.2
Initial Q Delay(d3), s/veh	0.0	0.0	0.0	0.0	0.0	0.0
%ile BackOfQ(50%),veh/ln	8.5	0.0	2.3	3.8	2.0	3.9
Unsig. Movement Delay, s/veh						
LnGrp Delay(d), s/veh	27.2	0.0	48.5	14.5	20.6	23.8
LnGrp LOS	C		D	B	C	C
Approach Vol, veh/h	1374			1125	382	
Approach Delay, s/veh	27.2			17.5	22.7	
Approach LOS	C			B	C	

Timer - Assigned Phs	2	3	4		8
Phs Duration (G+Y+Rc), s	38.5	13.3	38.1		51.5
Change Period (Y+Rc), s	6.0	7.0	7.0		7.0
Max Green Setting (Gmax), s	20.0	15.0	35.0		57.0
Max Q Clear Time (g_c+I1), s	12.3	6.8	23.2		13.2
Green Ext Time (p_c), s	0.6	0.1	7.9		9.6

Intersection Summary	
HCM 6th Ctrl Delay, s/veh	22.8
HCM 6th LOS	C

Notes

Unsignalized Delay for [EBR] is excluded from calculations of the approach delay and intersection delay.

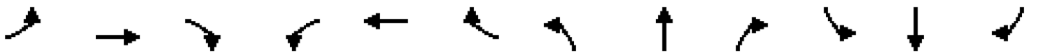

Movement	EBL	EBT	EBR	WBL	WBT	WBR	NBL	NBT	NBR	SBL	SBT	SBR
Lane Configurations												
Traffic Volume (veh/h)	53	0	59	11	0	9	192	780	40	16	1117	8
Future Volume (veh/h)	53	0	59	11	0	9	192	780	40	16	1117	8
Initial Q (Qb), veh	0	0	0	0	0	0	0	0	0	0	0	0
Ped-Bike Adj(A_pbT)	1.00		1.00	1.00		1.00	1.00		1.00	1.00		0.98
Parking Bus, Adj	1.00	1.00	1.00	1.00	1.00	1.00	1.00	1.00	1.00	1.00	1.00	1.00
Work Zone On Approach		No			No			No			No	
Adj Sat Flow, veh/h/ln	1900	1900	1900	1900	1900	1900	1900	1900	1900	1900	1900	1900
Adj Flow Rate, veh/h	56	0	63	12	0	10	204	830	43	17	1188	9
Peak Hour Factor	0.94	0.94	0.94	0.94	0.94	0.94	0.94	0.94	0.94	0.94	0.94	0.94
Percent Heavy Veh, %	0	0	0	0	0	0	0	0	0	0	0	0
Cap, veh/h	162	0	114	114	0	114	224	3818	197	34	3456	26
Arrive On Green	0.07	0.00	0.07	0.07	0.00	0.07	0.12	0.76	0.76	0.02	0.65	0.65
Sat Flow, veh/h	1427	0	1610	1360	0	1610	1810	5050	261	1810	5310	40
Grp Volume(v), veh/h	56	0	63	12	0	10	204	568	305	17	774	423
Grp Sat Flow(s),veh/h/ln	1427	0	1610	1360	0	1610	1810	1729	1853	1810	1729	1892
Q Serve(g_s), s	4.0	0.0	4.0	0.9	0.0	0.6	11.7	5.0	5.1	1.0	10.6	10.6
Cycle Q Clear(g_c), s	4.6	0.0	4.0	4.9	0.0	0.6	11.7	5.0	5.1	1.0	10.6	10.6
Prop In Lane	1.00		1.00	1.00		1.00	1.00		0.14	1.00		0.02
Lane Grp Cap(c), veh/h	162	0	114	114	0	114	224	2615	1401	34	2251	1231
V/C Ratio(X)	0.35	0.00	0.55	0.11	0.00	0.09	0.91	0.22	0.22	0.50	0.34	0.34
Avail Cap(c_a), veh/h	479	0	472	416	0	472	224	2615	1401	224	2251	1231
HCM Platoon Ratio	1.00	1.00	1.00	1.00	1.00	1.00	1.00	1.00	1.00	1.00	1.00	1.00
Upstream Filter(I)	1.00	0.00	1.00	1.00	0.00	1.00	0.95	0.95	0.95	1.00	1.00	1.00
Uniform Delay (d), s/veh	47.8	0.0	47.2	49.5	0.0	45.6	45.4	3.7	3.7	51.0	8.2	8.2
Incr Delay (d2), s/veh	2.7	0.0	8.6	0.9	0.0	0.7	36.7	0.2	0.3	22.8	0.4	0.8
Initial Q Delay(d3), s/veh	0.0	0.0	0.0	0.0	0.0	0.0	0.0	0.0	0.0	0.0	0.0	0.0
%ile BackOfQ(50%),veh/ln	1.6	0.0	1.9	0.3	0.0	0.3	7.3	1.2	1.4	0.6	3.3	3.8
Unsig. Movement Delay, s/veh												
LnGrp Delay(d), s/veh	50.5	0.0	55.7	50.4	0.0	46.3	82.2	3.9	4.1	73.9	8.7	9.0
LnGrp LOS	D		E	D		D	F	A	A	E	A	A
Approach Vol, veh/h		119			22			1077			1214	
Approach Delay, s/veh		53.3			48.5			18.8			9.7	
Approach LOS		D			D			B			A	

Timer - Assigned Phs	1	2		4	5	6		8				
Phs Duration (G+Y+Rc), s	6.0	85.4		13.7	17.0	74.3		13.7				
Change Period (Y+Rc), s	4.0	6.0		6.2	4.0	6.0		6.2				
Max Green Setting (Gmax), s	13.0	45.0		30.8	13.0	45.0		30.8				
Max Q Clear Time (g_c+I1), s	3.0	7.1		6.6	13.7	12.6		6.9				
Green Ext Time (p_c), s	0.0	11.9		1.0	0.0	16.3		0.1				

Intersection Summary			
HCM 6th Ctrl Delay, s/veh		16.2	
HCM 6th LOS		B	

> - ■>< ← < A t / VI 7

Movement	EBL	EBT	EBR	WBL	WBT	WBR	NBL	NBT	NBR	SBL	SBT	SBR
Lane Configurations	*i*i	ttt	i*	↰↰	++	f	*i*i	ttt	i*	*i*i	+++	↱
Traffic Volume (veh/h)	128	233	103	80	265	101	155	814	106	133	782	273
Future Volume (veh/h)	128	233	103	80	265	101	155	814	106	133	782	273
Initial Q (Qb), veh	0	0	0	0	0	0	0	0	0	0	0	0
Ped-Bike Adj(A_pbT)	1.00		1.00	1.00		1.00	1.00		1.00	1.00		1.00
Parking Bus, Adj	1.00	1.00	1.00	1.00	1.00	1.00	1.00	1.00	1.00	1.00	1.00	1.00
Work Zone On Approach		No			No			No			No	
Adj Sat Flow, veh/h/ln	1900	1900	1900	1900	1900	1900	1900	1900	1900	1900	1900	1900
Adj Flow Rate, veh/h	138	251	111	86	285	109	167	875	114	143	841	294
Peak Hour Factor	0.93	0.93	0.93	0.93	0.93	0.93	0.93	0.93	0.93	0.93	0.93	0.93
Percent Heavy Veh, %	0	0	0	0	0	0	0	0	0	0	0	0
Cap, veh/h	201	671	208	148	412	183	191	2974	923	206	2996	930
Arrive On Green	0.06	0.13	0.13	0.04	0.11	0.11	0.05	0.57	0.57	0.06	0.58	0.58
Sat Flow, veh/h	3510	5187	1610	3510	3610	1606	3510	5187	1610	3510	5187	1609
Grp Volume(v), veh/h	138	251	111	86	285	109	167	875	114	143	841	294
Grp Sat Flow(s),veh/h/ln	1755	1729	1610	1755	1805	1606	1755	1729	1610	1755	1729	1609
Q Serve(g_s), s	4.2	4.9	7.1	2.6	8.4	7.1	5.2	9.5	3.6	4.4	9.0	10.4
Cycle Q Clear(g_c), s	4.2	4.9	7.1	2.6	8.4	7.1	5.2	9.5	3.6	4.4	9.0	10.4
Prop In Lane	1.00		1.00	1.00		1.00	1.00		1.00	1.00		1.00
Lane Grp Cap(c), veh/h	201	671	208	148	412	183	191	2974	923	206	2996	930
V/C Ratio(X)	0.69	0.37	0.53	0.58	0.69	0.59	0.87	0.29	0.12	0.69	0.28	0.32
Avail Cap(c_a), veh/h	351	1575	489	351	1096	488	191	2974	923	351	2996	930
HCM Platoon Ratio	1.00	1.00	1.00	1.00	1.00	1.00	1.00	1.00	1.00	1.00	1.00	1.00
Upstream Filter(I)	1.00	1.00	1.00	1.00	1.00	1.00	1.00	1.00	1.00	0.92	0.92	0.92
Uniform Delay (d), s/veh	50.9	43.8	44.8	51.7	46.9	46.3	51.6	12.0	10.8	50.8	11.7	12.0
Incr Delay (d2), s/veh	4.1	0.3	2.1	3.6	2.1	3.1	32.7	0.3	0.3	3.8	0.2	0.8
Initial Q Delay(d3), s/veh	0.0	0.0	0.0	0.0	0.0	0.0	0.0	0.0	0.0	0.0	0.0	0.0
%ile BackOfQ(50%),veh/ln	1.9	2.0	2.9	1.2	3.8	2.9	3.1	3.3	1.2	2.0	3.1	3.6
Unsig. Movement Delay, s/veh												
LnGrp Delay(d), s/veh	55.0	44.2	46.9	55.3	48.9	49.3	84.3	12.3	11.0	54.6	11.9	12.8
LnGrp LOS	E	D	D	E	D	D	F	B	B	D	B	B
Approach Vol, veh/h		500			480			1156			1278	
Approach Delay, s/veh		47.8			50.2			22.6			16.9	
Approach LOS		D			D			C			B	

Timer - Assigned Phs	1	2	3	4	5	6	7	8
Phs Duration (G+Y+Rc), s	10.5	70.1	8.6	20.8	10.0	70.5	10.3	19.2
Change Period (Y+Rc), s	4.0	7.0	4.0	* 6.6	4.0	7.0	4.0	* 6.6
Max Green Setting (Gmax), s	6.5	33.0	11.0	* 33	6.0	38.0	11.0	* 33
Max Q Clear Time (g_c+I1), s	6.4	11.5	4.6	9.1	7.2	12.4	6.2	10.4
Green Ext Time (p_c), s	0.1	5.9	0.1	1.8	0.0	6.7	0.1	1.9

Intersection Summary	
HCM 6th Ctrl Delay, s/veh	28.0
HCM 6th LOS	C

Notes

* HCM 6th computational engine requires equal clearance times for the phases crossing the barrier.

> - ■>< ← < A t MJ 7

Movement	EBL	EBT	EBR	WBL	WBT	WBR	NBL	NBT	NBR	SBL	SBT	SBR
Lane Configurations	'i's	+++	r	'i's	+++	f	Vi	tttt	f	Vi	ttti*	
Traffic Volume (veh/h)	115	262	135	445	901	301	181	822	128	153	849	69
Future Volume (veh/h)	115	262	135	445	901	301	181	822	128	153	849	69
Initial Q (Qb), veh	0	0	0	0	0	0	0	0	0	0	0	0
Ped-Bike Adj(A_pbT)	1.00		1.00	1.00		1.00	1.00		0.99	1.00		0.98
Parking Bus, Adj	1.00	1.00	1.00	1.00	1.00	1.00	1.00	1.00	1.00	1.00	1.00	1.00
Work Zone On Approach		No			No			No			No	
Adj Sat Flow, veh/h/ln	1900	1900	1900	1900	1900	1900	1900	1900	1900	1900	1900	1900
Adj Flow Rate, veh/h	129	294	152	500	1012	338	203	924	144	172	954	78
Peak Hour Factor	0.89	0.89	0.89	0.89	0.89	0.89	0.89	0.89	0.89	0.89	0.89	0.89
Percent Heavy Veh, %	0	0	0	0	0	0	0	0	0	0	0	0
Cap, veh/h	233	1588	492	415	1856	576	247	2212	538	216	2043	166
Arrive On Green	0.07	0.31	0.31	0.12	0.36	0.36	0.07	0.34	0.34	0.06	0.33	0.33
Sat Flow, veh/h	3510	5187	1607	3510	5187	1610	3510	6536	1588	3510	6200	502
Grp Volume(v), veh/h	129	294	152	500	1012	338	203	924	144	172	752	280
Grp Sat Flow(s),veh/h/ln	1755	1729	1607	1755	1729	1610	1755	1634	1588	1755	1634	1800
Q Serve(g_s), s	5.9	6.9	12.0	19.5	25.7	28.2	9.4	18.0	10.9	8.0	20.1	20.3
Cycle Q Clear(g_c), s	5.9	6.9	12.0	19.5	25.7	28.2	9.4	18.0	10.9	8.0	20.1	20.3
Prop In Lane	1.00		1.00	1.00		1.00	1.00		1.00	1.00		0.28
Lane Grp Cap(c), veh/h	233	1588	492	415	1856	576	247	2212	538	216	1615	593
V/C Ratio(X)	0.55	0.19	0.31	1.21	0.55	0.59	0.82	0.42	0.27	0.80	0.47	0.47
Avail Cap(c_a), veh/h	436	1588	492	415	1856	576	426	2212	538	426	1615	593
HCM Platoon Ratio	1.00	1.00	1.00	1.00	1.00	1.00	1.00	1.00	1.00	1.00	1.00	1.00
Upstream Filter(I)	1.00	1.00	1.00	1.00	1.00	1.00	0.98	0.98	0.98	1.00	1.00	1.00
Uniform Delay (d), s/veh	74.6	42.1	43.9	72.7	42.3	43.1	75.7	42.1	39.7	76.4	43.8	43.9
Incr Delay (d2), s/veh	0.8	0.3	1.6	113.1	1.2	4.3	2.5	0.6	1.2	2.5	1.0	2.7
Initial Q Delay(d3), s/veh	0.0	0.0	0.0	0.0	0.0	0.0	0.0	0.0	0.0	0.0	0.0	0.0
%ile BackOfQ(50%),veh/ln	2.6	2.9	4.9	15.1	10.9	11.6	4.3	7.2	4.3	3.6	8.1	9.4
Unsig. Movement Delay, s/veh												
LnGrp Delay(d), s/veh	75.4	42.4	45.5	185.9	43.4	47.4	78.2	42.6	40.9	78.9	44.8	46.6
LnGrp LOS	E	D	D	F	D	D	E	D	D	E	D	D
Approach Vol, veh/h		575			1850			1271			1204	
Approach Delay, s/veh		50.6			82.7			48.1			50.1	
Approach LOS		D			F			D			D	

Timer - Assigned Phs	1	2	3	4	5	6	7	8
Phs Duration (G+Y+Rc), s	17.2	62.8	27.0	58.0	18.6	61.4	18.5	66.5
Change Period (Y+Rc), s	7.0	7.0	7.5	7.5	7.0	7.0	7.5	7.5
Max Green Setting (Gmax), s	10.0	46.0	19.5	50.5	20.0	46.0	20.5	49.5
Max Q Clear Time (g_c+I1), s	10.0	20.0	21.5	14.0	11.4	22.3	7.9	30.2
Green Ext Time (p_c), s	0.2	8.2	0.0	2.2	0.2	7.8	0.1	7.3

Intersection Summary	
HCM 6th Ctrl Delay, s/veh	61.9
HCM 6th LOS	E



Movement	EBL	EBT	EBR	WBL	WBT	WBR	NBL	NBT	NBR	SBL	SBT	SBR
Lane Configurations	fl	++	r	fl	++	r	'i'i	tttt	r	'i'i	tttt	r
Traffic Volume (veh/h)	76	32	61	50	54	58	109	927	39	57	995	259
Future Volume (veh/h)	76	32	61	50	54	58	109	927	39	57	995	259
Initial Q (Qb), veh	0	0	0	0	0	0	0	0	0	0	0	0
Ped-Bike Adj(A_pbT)	1.00		1.00	1.00		1.00	1.00		1.00	1.00		1.00
Parking Bus, Adj	1.00	1.00	1.00	1.00	1.00	1.00	1.00	1.00	1.00	1.00	1.00	1.00
Work Zone On Approach		No			No			No			No	
Adj Sat Flow, veh/h/ln	1900	1900	1900	1900	1900	1900	1900	1900	1900	1900	1900	1900
Adj Flow Rate, veh/h	81	34	0	53	57	0	116	986	0	61	1059	0
Peak Hour Factor	0.94	0.94	0.94	0.94	0.94	0.94	0.94	0.94	0.94	0.94	0.94	0.94
Percent Heavy Veh, %	0	0	0	0	0	0	0	0	0	0	0	0
Cap, veh/h	210	272		192	254		168	4180		155	4155	
Arrive On Green	0.06	0.08	0.00	0.05	0.07	0.00	0.05	0.64	0.00	0.04	0.64	0.00
Sat Flow, veh/h	3510	3610	1610	3510	3610	1610	3510	6536	1610	3510	6536	1610
Grp Volume(v), veh/h	81	34	0	53	57	0	116	986	0	61	1059	0
Grp Sat Flow(s),veh/h/ln	1755	1805	1610	1755	1805	1610	1755	1634	1610	1755	1634	1610
Q Serve(g_s), s	3.2	1.3	0.0	2.1	2.2	0.0	4.7	9.3	0.0	2.5	10.2	0.0
Cycle Q Clear(g_c), s	3.2	1.3	0.0	2.1	2.2	0.0	4.7	9.3	0.0	2.5	10.2	0.0
Prop In Lane	1.00		1.00	1.00		1.00	1.00		1.00	1.00		1.00
Lane Grp Cap(c), veh/h	210	272		192	254		168	4180		155	4155	
V/C Ratio(X)	0.39	0.12		0.28	0.22		0.69	0.24		0.39	0.25	
Avail Cap(c_a), veh/h	496	1033		496	1033		484	4180		484	4155	
HCM Platoon Ratio	1.00	1.00	1.00	1.00	1.00	1.00	1.00	1.00	1.00	1.00	1.00	1.00
Upstream Filter(I)	1.00	1.00	0.00	1.00	1.00	0.00	0.98	0.98	0.00	0.66	0.66	0.00
Uniform Delay (d), s/veh	65.6	62.6	0.0	65.8	63.6	0.0	68.0	11.1	0.0	67.4	11.5	0.0
Incr Delay (d2), s/veh	1.4	0.2	0.0	0.8	0.5	0.0	4.9	0.1	0.0	1.1	0.1	0.0
Initial Q Delay(d3), s/veh	0.0	0.0	0.0	0.0	0.0	0.0	0.0	0.0	0.0	0.0	0.0	0.0
%ile BackOfQ(50%),veh/ln	1.5	0.6	0.0	1.0	1.0	0.0	2.2	3.2	0.0	1.1	3.5	0.0
Unsig. Movement Delay, s/veh												
LnGrp Delay(d), s/veh	67.0	62.8	0.0	66.5	64.2	0.0	72.9	11.2	0.0	68.5	11.6	0.0
LnGrp LOS	E	E		E	E		E	B		E	B	
Approach Vol, veh/h		115			110			1102			1120	
Approach Delay, s/veh		65.8			65.3			17.7			14.7	
Approach LOS		E			E			B			B	

Timer - Assigned Phs	1	2	3	4	5	6	7	8
Phs Duration (G+Y+Rc), s	13.4	99.7	14.4	17.4	13.9	99.2	15.2	16.7
Change Period (Y+Rc), s	7.0	7.0	6.5	6.5	7.0	7.0	6.5	6.5
Max Green Setting (Gmax), s	20.0	36.0	20.5	41.5	20.0	36.0	20.5	41.5
Max Q Clear Time (g_c+I1), s	4.5	11.3	4.1	3.3	6.7	12.2	5.2	4.2
Green Ext Time (p_c), s	0.1	7.9	0.1	0.2	0.2	8.4	0.2	0.4

Intersection Summary	
HCM 6th Ctrl Delay, s/veh	20.7
HCM 6th LOS	C

Notes

Unsignalized Delay for [NBR, EBR, WBR, SBR] is excluded from calculations of the approach delay and intersection delay.



Movement	EBL	EBT	EBR	WBL	WBT	WBR	NBL	NBT	NBR	SBL	SBT	SBR
Lane Configurations	fl	++	r	fl	++	r	'i'i	tttt	r	'i'i	tttt	r
Traffic Volume (veh/h)	49	43	78	59	78	24	319	1074	67	31	999	129
Future Volume (veh/h)	49	43	78	59	78	24	319	1074	67	31	999	129
Initial Q (Qb), veh	0	0	0	0	0	0	0	0	0	0	0	0
Ped-Bike Adj(A_pbT)	1.00		1.00	1.00		1.00	1.00		1.00	1.00		1.00
Parking Bus, Adj	1.00	1.00	1.00	1.00	1.00	1.00	1.00	1.00	1.00	1.00	1.00	1.00
Work Zone On Approach		No			No			No			No	
Adj Sat Flow, veh/h/ln	1900	1900	1900	1900	1900	1900	1900	1900	1900	1900	1900	1900
Adj Flow Rate, veh/h	52	45	0	62	82	0	336	1131	0	33	1052	0
Peak Hour Factor	0.95	0.95	0.95	0.95	0.95	0.95	0.95	0.95	0.95	0.95	0.95	0.95
Percent Heavy Veh, %	0	0	0	0	0	0	0	0	0	0	0	0
Cap, veh/h	223	267		235	279		364	3985		148	3582	
Arrive On Green	0.06	0.07	0.00	0.07	0.08	0.00	0.10	0.61	0.00	0.04	0.55	0.00
Sat Flow, veh/h	3510	3610	1610	3510	3610	1610	3510	6536	1610	3510	6536	1610
Grp Volume(v), veh/h	52	45	0	62	82	0	336	1131	0	33	1052	0
Grp Sat Flow(s),veh/h/ln	1755	1805	1610	1755	1805	1610	1755	1634	1610	1755	1634	1610
Q Serve(g_s), s	1.9	1.6	0.0	2.3	2.9	0.0	12.8	11.0	0.0	1.2	11.7	0.0
Cycle Q Clear(g_c), s	1.9	1.6	0.0	2.3	2.9	0.0	12.8	11.0	0.0	1.2	11.7	0.0
Prop In Lane	1.00		1.00	1.00		1.00	1.00		1.00	1.00		1.00
Lane Grp Cap(c), veh/h	223	267		235	279		364	3985		148	3582	
V/C Ratio(X)	0.23	0.17		0.26	0.29		0.92	0.28		0.22	0.29	
Avail Cap(c_a), veh/h	312	1177		312	1177		364	3985		234	3582	
HCM Platoon Ratio	1.00	1.00	1.00	1.00	1.00	1.00	1.00	1.00	1.00	1.00	1.00	1.00
Upstream Filter(I)	1.00	1.00	0.00	1.00	1.00	0.00	0.93	0.93	0.00	0.98	0.98	0.00
Uniform Delay (d), s/veh	60.1	58.6	0.0	59.8	58.8	0.0	60.0	12.4	0.0	62.5	16.4	0.0
Incr Delay (d2), s/veh	0.2	0.2	0.0	0.2	0.4	0.0	26.7	0.2	0.0	0.3	0.2	0.0
Initial Q Delay(d3), s/veh	0.0	0.0	0.0	0.0	0.0	0.0	0.0	0.0	0.0	0.0	0.0	0.0
%ile BackOfQ(50%),veh/ln	0.8	0.7	0.0	1.0	1.4	0.0	6.9	3.8	0.0	0.5	4.2	0.0
Unsig. Movement Delay, s/veh												
LnGrp Delay(d), s/veh	60.3	58.8	0.0	60.1	59.2	0.0	86.7	12.6	0.0	62.8	16.6	0.0
LnGrp LOS	E	E		E	E		F	B		E	B	
Approach Vol, veh/h		97			144			1467			1085	
Approach Delay, s/veh		59.6			59.6			29.6			18.0	
Approach LOS		E			E			C			B	

Timer - Assigned Phs	1	2	3	4	5	6	7	8
Phs Duration (G+Y+Rc), s	12.7	89.3	16.0	17.0	21.0	81.0	15.6	17.4
Change Period (Y+Rc), s	7.0	7.0	7.0	7.0	7.0	7.0	7.0	7.0
Max Green Setting (Gmax), s	9.0	42.0	12.0	44.0	14.0	37.0	12.0	44.0
Max Q Clear Time (g_c+I1), s	3.2	13.0	4.3	3.6	14.8	13.7	3.9	4.9
Green Ext Time (p_c), s	0.0	8.2	0.0	0.2	0.0	7.0	0.0	0.4

Intersection Summary	
HCM 6th Ctrl Delay, s/veh	27.7
HCM 6th LOS	C

Notes

Unsignalized Delay for [NBR, EBR, WBR, SBR] is excluded from calculations of the approach delay and intersection delay.

> - ■>< ← < A t MJ 7

Movement	EBL	EBT	EBR	WBL	WBT	WBR	NBL	NBT	NBR	SBL	SBT	SBR
Lane Configurations	Vi	↑	f	vs	++	r	's'i	tttt	r	's'i	tttt	↱
Traffic Volume (veh/h)	423	75	389	139	169	32	386	838	312	102	680	239
Future Volume (veh/h)	423	75	389	139	169	32	386	838	312	102	680	239
Initial Q (Qb), veh	0	0	0	0	0	0	0	0	0	0	0	0
Ped-Bike Adj(A_pbT)	1.00		1.00	1.00		1.00	1.00		1.00	1.00		0.99
Parking Bus, Adj	1.00	1.00	1.00	1.00	1.00	1.00	1.00	1.00	1.00	1.00	1.00	1.00
Work Zone On Approach		No			No			No			No	
Adj Sat Flow, veh/h/ln	1900	1900	1900	1900	1900	1900	1900	1900	1900	1900	1900	1900
Adj Flow Rate, veh/h	441	78	405	145	176	33	402	873	325	106	708	249
Peak Hour Factor	0.96	0.96	0.96	0.96	0.96	0.96	0.96	0.96	0.96	0.96	0.96	0.96
Percent Heavy Veh, %	0	0	0	0	0	0	0	0	0	0	0	0
Cap, veh/h	944	503	426	412	408	182	455	2759	866	155	2202	968
Arrive On Green	0.27	0.26	0.26	0.12	0.11	0.11	0.13	0.42	0.42	0.04	0.34	0.34
Sat Flow, veh/h	3510	1900	1610	3510	3610	1610	3510	6536	1606	3510	6536	1589
Grp Volume(v), veh/h	441	78	405	145	176	33	402	873	325	106	708	249
Grp Sat Flow(s),veh/h/ln	1755	1900	1610	1755	1805	1610	1755	1634	1606	1755	1634	1589
Q Serve(g_s), s	15.2	4.6	35.8	5.5	6.6	2.7	16.3	12.9	17.0	4.3	11.7	10.6
Cycle Q Clear(g_c), s	15.2	4.6	35.8	5.5	6.6	2.7	16.3	12.9	17.0	4.3	11.7	10.6
Prop In Lane	1.00		1.00	1.00		1.00	1.00		1.00	1.00		1.00
Lane Grp Cap(c), veh/h	944	503	426	412	408	182	455	2759	866	155	2202	968
V/C Ratio(X)	0.47	0.16	0.95	0.35	0.43	0.18	0.88	0.32	0.38	0.68	0.32	0.26
Avail Cap(c_a), veh/h	944	563	477	412	523	233	605	2759	866	412	2202	968
HCM Platoon Ratio	1.00	1.00	1.00	1.00	1.00	1.00	1.00	1.00	1.00	1.00	1.00	1.00
Upstream Filter(I)	1.00	1.00	1.00	1.00	1.00	1.00	0.93	0.93	0.93	0.97	0.97	0.97
Uniform Delay (d), s/veh	44.3	40.9	52.4	58.9	60.0	58.2	62.0	27.9	19.3	68.3	35.8	13.4
Incr Delay (d2), s/veh	1.7	0.1	26.6	2.4	0.3	0.2	9.2	0.3	1.2	1.9	0.4	0.6
Initial Q Delay(d3), s/veh	0.0	0.0	0.0	0.0	0.0	0.0	0.0	0.0	0.0	0.0	0.0	0.0
%ile BackOfQ(50%),veh/ln	6.9	2.2	17.4	2.6	3.0	1.1	7.7	5.0	6.5	1.9	4.6	3.9
Unsig. Movement Delay, s/veh												
LnGrp Delay(d), s/veh	46.0	40.9	78.9	61.3	60.2	58.4	71.2	28.2	20.4	70.2	36.1	14.0
LnGrp LOS	D	D	E	E	E	E	E	C	C	E	D	B
Approach Vol, veh/h		924			354			1600			1063	
Approach Delay, s/veh		60.0			60.5			37.4			34.3	
Approach LOS		E			E			D			C	

Timer - Assigned Phs	1	2	3	4	5	6	7	8
Phs Duration (G+Y+Rc), s	11.4	67.2	22.0	44.4	23.8	54.8	44.0	22.4
Change Period (Y+Rc), s	5.0	6.0	5.0	6.0	5.0	6.0	5.0	6.0
Max Green Setting (Gmax), s	7.0	46.0	17.0	43.0	25.0	38.0	39.0	21.0
Max Q Clear Time (g_c+I1), s	6.3	19.0	7.5	37.8	18.3	13.7	17.2	8.6
Green Ext Time (p_c), s	0.1	4.2	0.1	0.6	0.5	3.2	0.8	0.5

Intersection Summary	
HCM 6th Ctrl Delay, s/veh	44.0
HCM 6th LOS	D



Movement	EBL	EBR	NBL	NBT	SBT	SBR
Lane Configurations						
Traffic Volume (veh/h)	675	598	268	860	871	273
Future Volume (veh/h)	675	598	268	860	871	273
Initial Q (Qb), veh	0	0	0	0	0	0
Ped-Bike Adj(A_pbT)	1.00	1.00	1.00			1.00
Parking Bus, Adj	1.00	1.00	1.00	1.00	1.00	1.00
Work Zone On Approach	No			No	No	
Adj Sat Flow, veh/h/ln	1900	1900	1900	1900	1900	1900
Adj Flow Rate, veh/h	726	643	288	925	937	294
Peak Hour Factor	0.93	0.93	0.93	0.93	0.93	0.93
Percent Heavy Veh, %	0	0	0	0	0	0
Cap, veh/h	1372	792	354	3366	2489	1242
Arrive On Green	0.39	0.39	0.10	0.51	0.38	0.38
Sat Flow, veh/h	3510	1610	3510	6802	6802	1610
Grp Volume(v), veh/h	726	643	288	925	937	294
Grp Sat Flow(s),veh/h/ln	1755	1610	1755	1634	1634	1610
Q Serve(g_s), s	19.1	40.5	9.6	9.6	12.4	6.1
Cycle Q Clear(g_c), s	19.1	40.5	9.6	9.6	12.4	6.1
Prop In Lane	1.00	1.00	1.00			1.00
Lane Grp Cap(c), veh/h	1372	792	354	3366	2489	1242
V/C Ratio(X)	0.53	0.81	0.81	0.27	0.38	0.24
Avail Cap(c_a), veh/h	1372	792	1053	3366	2489	1242
HCM Platoon Ratio	1.00	1.00	1.00	1.00	1.00	1.00
Upstream Filter(I)	1.00	1.00	0.91	0.91	0.86	0.86
Uniform Delay (d), s/veh	28.1	25.8	52.8	16.4	26.9	3.8
Incr Delay (d2), s/veh	1.5	8.9	1.6	0.2	0.4	0.4
Initial Q Delay(d3), s/veh	0.0	0.0	0.0	0.0	0.0	0.0
%ile BackOfQ(50%),veh/ln	8.1	34.3	4.2	3.4	4.7	6.2
Unsig. Movement Delay, s/veh						
LnGrp Delay(d), s/veh	29.5	34.7	54.4	16.6	27.2	4.2
LnGrp LOS	C	C	D	B	C	A
Approach Vol, veh/h	1369			1213	1231	
Approach Delay, s/veh	32.0			25.6	21.7	
Approach LOS	C			C	C	

Timer - Assigned Phs		2		4	5	6
Phs Duration (G+Y+Rc), s		68.0		52.0	16.1	51.9
Change Period (Y+Rc), s		6.2		5.1	4.0	6.2
Max Green Setting (Gmax), s		61.8		46.9	36.0	21.8
Max Q Clear Time (g_c+I1), s		11.6		42.5	11.6	14.4
Green Ext Time (p_c), s		4.1		1.5	0.5	2.8

Intersection Summary		
HCM 6th Ctrl Delay, s/veh		26.6
HCM 6th LOS		C

> - ■>< ← < A t MJ 7

Movement	EBL	EBT	EBR	WBL	WBT	WBR	NBL	NBT	NBR	SBL	SBT	SBR
Lane Configurations	Vs	↟		3+	_r_	!i		tttfc		'i's	M+	?
Traffic Volume (veh/h)	261	16	154	85	18	240	163	627	124	151	982	336
Future Volume (veh/h)	261	16	154	85	18	240	163	627	124	151	982	336
Initial Q (Qb), veh	0	0	0	0	0	0	0	0	0	0	0	0
Ped-Bike Adj(A_pbT)	1.00		1.00	1.00		1.00	1.00		0.99	1.00		1.00
Parking Bus, Adj	1.00	1.00	1.00	1.00	1.00	1.00	1.00	1.00	1.00	1.00	1.00	1.00
Work Zone On Approach		No			No			No			No	
Adj Sat Flow, veh/h/ln	1900	1900	1900	1900	1900	1900	1900	1900	1900	1900	1900	1900
Adj Flow Rate, veh/h	272	17	160	89	19	250	170	653	129	157	1023	0
Peak Hour Factor	0.96	0.96	0.96	0.96	0.96	0.96	0.96	0.96	0.96	0.96	0.96	0.96
Percent Heavy Veh, %	0	0	0	0	0	0	0	0	0	0	0	0
Cap, veh/h	334	33	307	129	350	295	145	2673	510	203	2388	
Arrive On Green	0.10	0.21	0.21	0.07	0.18	0.18	0.08	0.48	0.48	0.06	0.46	0.00
Sat Flow, veh/h	3510	157	1477	1810	1900	1602	1810	5539	1057	3510	5187	1610
Grp Volume(v), veh/h	272	0	177	89	19	250	170	575	207	157	1023	0
Grp Sat Flow(s),veh/h/ln	1755	0	1634	1810	1900	1602	1810	1634	1694	1755	1729	1610
Q Serve(g_s), s	11.4	0.0	14.4	7.2	1.2	22.6	12.0	10.3	10.8	6.6	19.9	0.0
Cycle Q Clear(g_c), s	11.4	0.0	14.4	7.2	1.2	22.6	12.0	10.3	10.8	6.6	19.9	0.0
Prop In Lane	1.00		0.90	1.00		1.00	1.00		0.62	1.00		1.00
Lane Grp Cap(c), veh/h	334	0	340	129	350	295	145	2365	817	203	2388	
V/C Ratio(X)	0.81	0.00	0.52	0.69	0.05	0.85	1.17	0.24	0.25	0.77	0.43	
Avail Cap(c_a), veh/h	503	0	561	271	665	561	145	2365	817	234	2388	
HCM Platoon Ratio	1.00	1.00	1.00	1.00	1.00	1.00	1.00	1.00	1.00	1.00	1.00	1.00
Upstream Filter(I)	1.00	0.00	1.00	1.00	1.00	1.00	1.00	1.00	1.00	0.83	0.83	0.00
Uniform Delay (d), s/veh	66.6	0.0	52.8	68.0	50.4	59.1	69.0	22.8	22.9	69.7	27.2	0.0
Incr Delay (d2), s/veh	7.9	0.0	1.8	8.9	0.1	9.1	129.3	0.2	0.7	12.1	0.5	0.0
Initial Q Delay(d3), s/veh	0.0	0.0	0.0	0.0	0.0	0.0	0.0	0.0	0.0	0.0	0.0	0.0
%ile BackOfQ(50%),veh/ln	5.5	0.0	6.2	3.7	0.6	10.0	10.6	3.9	4.4	3.3	8.0	0.0
Unsig. Movement Delay, s/veh												
LnGrp Delay(d), s/veh	74.4	0.0	54.5	76.9	50.5	68.2	198.3	23.0	23.6	81.8	27.7	0.0
LnGrp LOS	E		D	E	D	E	F	C	C	F	C	
Approach Vol, veh/h		449			358			952			1180	
Approach Delay, s/veh		66.6			69.4			54.4			34.9	
Approach LOS		E			E			D			C	

Timer - Assigned Phs	1	2	3	4	5	6	7	8
Phs Duration (G+Y+Rc), s	15.7	79.4	17.2	37.7	19.0	76.1	20.8	34.2
Change Period (Y+Rc), s	7.0	7.0	6.5	6.5	7.0	7.0	6.5	6.5
Max Green Setting (Gmax), s	10.0	39.0	22.5	51.5	12.0	37.0	21.5	52.5
Max Q Clear Time (g_c+I1), s	13.6	12.8	9.2	16.4	14.0	21.9	13.4	24.6
Green Ext Time (p_c), s	0.1	8.1	0.2	1.7	0.0	8.2	0.9	1.6

Intersection Summary	
HCM 6th Ctrl Delay, s/veh	50.3
HCM 6th LOS	D

Notes

Unsignalized Delay for [SBR] is excluded from calculations of the approach delay and intersection delay.

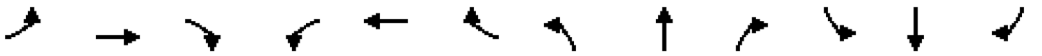

Movement	EBL	EBT	EBR	WBL	WBT	WBR	NBL	NBT	NBR	SBL	SBT	SBR
Lane Configurations												
Traffic Volume (veh/h)	131	2	272	26	4	30	114	1687	8	15	995	10
Future Volume (veh/h)	131	2	272	26	4	30	114	1687	8	15	995	10
Initial Q (Qb), veh	0	0	0	0	0	0	0	0	0	0	0	0
Ped-Bike Adj(A_pbT)	1.00		1.00	1.00		1.00	1.00		0.98	1.00		1.00
Parking Bus, Adj	1.00	1.00	1.00	1.00	1.00	1.00	1.00	1.00	1.00	1.00	1.00	1.00
Work Zone On Approach		No			No			No			No	
Adj Sat Flow, veh/h/ln	1900	1900	1900	1900	1900	1900	1900	1900	1900	1900	1900	1900
Adj Flow Rate, veh/h	139	2	289	28	4	32	121	1795	9	16	1059	11
Peak Hour Factor	0.94	0.94	0.94	0.94	0.94	0.94	0.94	0.94	0.94	0.94	0.94	0.94
Percent Heavy Veh, %	0	0	0	0	0	0	0	0	0	0	0	0
Cap, veh/h	351	2	352	122	40	321	152	3237	16	32	2866	30
Arrive On Green	0.22	0.22	0.22	0.22	0.22	0.22	0.08	0.61	0.61	0.02	0.54	0.54
Sat Flow, veh/h	1394	11	1601	1105	182	1456	1810	5326	27	1810	5293	55
Grp Volume(v), veh/h	139	0	291	28	0	36	121	1165	639	16	692	378
Grp Sat Flow(s),veh/h/ln	1394	0	1612	1105	0	1638	1810	1729	1894	1810	1729	1890
Q Serve(g_s), s	9.3	0.0	18.0	2.6	0.0	1.8	6.9	20.9	20.9	0.9	12.0	12.0
Cycle Q Clear(g_c), s	11.1	0.0	18.0	20.6	0.0	1.8	6.9	20.9	20.9	0.9	12.0	12.0
Prop In Lane	1.00		0.99	1.00		0.89	1.00		0.01	1.00		0.03
Lane Grp Cap(c), veh/h	351	0	355	122	0	361	152	2102	1151	32	1872	1023
V/C Ratio(X)	0.40	0.00	0.82	0.23	0.00	0.10	0.80	0.55	0.55	0.50	0.37	0.37
Avail Cap(c_a), veh/h	453	0	473	203	0	480	224	2102	1151	224	1872	1023
HCM Platoon Ratio	1.00	1.00	1.00	1.00	1.00	1.00	1.00	1.00	1.00	1.00	1.00	1.00
Upstream Filter(I)	1.00	0.00	1.00	1.00	0.00	1.00	0.62	0.62	0.62	1.00	1.00	1.00
Uniform Delay (d), s/veh	37.1	0.0	39.0	48.8	0.0	32.6	47.2	12.2	12.2	51.1	13.8	13.8
Incr Delay (d2), s/veh	1.5	0.0	11.8	2.0	0.0	0.3	12.7	0.7	1.2	23.3	0.6	1.0
Initial Q Delay(d3), s/veh	0.0	0.0	0.0	0.0	0.0	0.0	0.0	0.0	0.0	0.0	0.0	0.0
%ile BackOfQ(50%),veh/ln	3.3	0.0	8.3	0.8	0.0	0.8	3.5	6.9	7.7	0.6	4.3	4.8
Unsig. Movement Delay, s/veh												
LnGrp Delay(d), s/veh	38.6	0.0	50.8	50.8	0.0	32.9	59.9	12.8	13.4	74.4	14.4	14.8
LnGrp LOS	D		D	D		C	E	B	B	E	B	B
Approach Vol, veh/h		430			64			1925			1086	
Approach Delay, s/veh		46.9			40.7			16.0			15.4	
Approach LOS		D			D			B			B	

Timer - Assigned Phs	1	2		4	5	6		8				
Phs Duration (G+Y+Rc), s	5.9	69.8		29.3	12.8	62.9		29.3				
Change Period (Y+Rc), s	4.0	6.0		6.2	4.0	6.0		6.2				
Max Green Setting (Gmax), s	13.0	45.0		30.8	13.0	45.0		30.8				
Max Q Clear Time (g_c+I1), s	2.9	22.9		20.0	8.9	14.0		22.6				
Green Ext Time (p_c), s	0.0	18.2		3.1	0.2	14.0		0.2				

Intersection Summary												
HCM 6th Ctrl Delay, s/veh			20.0									
HCM 6th LOS			C									

> - ■>< ← < A t / VI 7

Movement	EBL	EBT	EBR	WBL	WBT	WBR	NBL	NBT	NBR	SBL	SBT	SBR
Lane Configurations	*i*i	ttt	i*	↰↰	++	f	*i*i	ttt	i*	*i*i	+++	↱
Traffic Volume (veh/h)	365	515	168	85	278	171	168	1337	106	158	976	128
Future Volume (veh/h)	365	515	168	85	278	171	168	1337	106	158	976	128
Initial Q (Qb), veh	0	0	0	0	0	0	0	0	0	0	0	0
Ped-Bike Adj(A_pbT)	1.00		1.00	1.00		1.00	1.00		1.00	1.00		1.00
Parking Bus, Adj	1.00	1.00	1.00	1.00	1.00	1.00	1.00	1.00	1.00	1.00	1.00	1.00
Work Zone On Approach		No			No			No			No	
Adj Sat Flow, veh/h/ln	1900	1900	1900	1900	1900	1900	1900	1900	1900	1900	1900	1900
Adj Flow Rate, veh/h	397	560	183	92	302	186	183	1453	115	172	1061	139
Peak Hour Factor	0.92	0.92	0.92	0.92	0.92	0.92	0.92	0.92	0.92	0.92	0.92	0.92
Percent Heavy Veh, %	0	0	0	0	0	0	0	0	0	0	0	0
Cap, veh/h	319	1035	321	150	546	244	248	2563	795	236	2546	787
Arrive On Green	0.09	0.20	0.20	0.04	0.15	0.15	0.07	0.49	0.49	0.07	0.49	0.49
Sat Flow, veh/h	3510	5187	1608	3510	3610	1610	3510	5187	1609	3510	5187	1603
Grp Volume(v), veh/h	397	560	183	92	302	186	183	1453	115	172	1061	139
Grp Sat Flow(s),veh/h/ln	1755	1729	1608	1755	1805	1610	1755	1729	1609	1755	1729	1603
Q Serve(g_s), s	10.0	10.7	11.3	2.8	8.5	12.2	5.6	21.7	4.3	5.3	14.4	5.3
Cycle Q Clear(g_c), s	10.0	10.7	11.3	2.8	8.5	12.2	5.6	21.7	4.3	5.3	14.4	5.3
Prop In Lane	1.00		1.00	1.00		1.00	1.00		1.00	1.00		1.00
Lane Grp Cap(c), veh/h	319	1035	321	150	546	244	248	2563	795	236	2546	787
V/C Ratio(X)	1.24	0.54	0.57	0.61	0.55	0.76	0.74	0.57	0.14	0.73	0.42	0.18
Avail Cap(c_a), veh/h	319	1575	488	351	1129	504	351	2563	795	351	2546	787
HCM Platoon Ratio	1.00	1.00	1.00	1.00	1.00	1.00	1.00	1.00	1.00	1.00	1.00	1.00
Upstream Filter(I)	1.00	1.00	1.00	1.00	1.00	1.00	1.00	1.00	1.00	0.93	0.93	0.93
Uniform Delay (d), s/veh	50.0	39.5	39.8	51.8	43.2	44.8	50.1	19.6	15.2	50.3	17.9	15.6
Incr Delay (d2), s/veh	133.5	0.4	1.6	4.0	0.9	4.9	4.9	0.9	0.4	4.0	0.5	0.5
Initial Q Delay(d3), s/veh	0.0	0.0	0.0	0.0	0.0	0.0	0.0	0.0	0.0	0.0	0.0	0.0
%ile BackOfQ(50%),veh/ln	10.2	4.4	4.5	1.3	3.8	5.0	2.5	8.1	1.6	2.4	5.3	1.9
Unsig. Movement Delay, s/veh												
LnGrp Delay(d), s/veh	183.5	39.9	41.4	55.8	44.1	49.7	55.1	20.5	15.5	54.3	18.4	16.1
LnGrp LOS	F	D	D	E	D	D	E	C	B	D	B	B
Approach Vol, veh/h		1140			580			1751			1372	
Approach Delay, s/veh		90.2			47.8			23.8			22.7	
Approach LOS		F			D			C			C	

Timer - Assigned Phs	1	2	3	4	5	6	7	8
Phs Duration (G+Y+Rc), s	11.4	61.3	8.7	28.5	11.8	61.0	14.0	23.2
Change Period (Y+Rc), s	4.0	7.0	4.0	* 6.6	4.0	7.0	4.0	* 6.6
Max Green Setting (Gmax), s	7.0	33.0	11.0	* 33	11.0	33.0	10.0	* 34
Max Q Clear Time (g_c+I1), s	7.3	23.7	4.8	13.3	7.6	16.4	12.0	14.2
Green Ext Time (p_c), s	0.2	6.0	0.1	4.0	0.2	6.6	0.0	2.2

Intersection Summary	
HCM 6th Ctrl Delay, s/veh	41.9
HCM 6th LOS	D

Notes

* HCM 6th computational engine requires equal clearance times for the phases crossing the barrier.

> - ■>< ← < A t MJ 7

Movement	EBL	EBT	EBR	WBL	WBT	WBR	NBL	NBT	NBR	SBL	SBT	SBR
Lane Configurations	'i's	+++	r	'i's	+++	f	Vi	tttt	f	Vi	ttti*	
Traffic Volume (veh/h)	299	949	304	362	592	202	239	1139	346	331	1032	87
Future Volume (veh/h)	299	949	304	362	592	202	239	1139	346	331	1032	87
Initial Q (Qb), veh	0	0	0	0	0	0	0	0	0	0	0	0
Ped-Bike Adj(A_pbT)	1.00		0.98	1.00		0.99	1.00		0.98	1.00		1.00
Parking Bus, Adj	1.00	1.00	1.00	1.00	1.00	1.00	1.00	1.00	1.00	1.00	1.00	1.00
Work Zone On Approach		No			No			No			No	
Adj Sat Flow, veh/h/ln	1900	1900	1900	1900	1900	1900	1900	1900	1900	1900	1900	1900
Adj Flow Rate, veh/h	322	1020	327	389	637	217	257	1225	372	356	1110	94
Peak Hour Factor	0.93	0.93	0.93	0.93	0.93	0.93	0.93	0.93	0.93	0.93	0.93	0.93
Percent Heavy Veh, %	0	0	0	0	0	0	0	0	0	0	0	0
Cap, veh/h	365	1588	485	415	1661	513	301	1876	454	397	1944	164
Arrive On Green	0.10	0.31	0.31	0.12	0.32	0.32	0.09	0.29	0.29	0.11	0.31	0.31
Sat Flow, veh/h	3510	5187	1585	3510	5187	1601	3510	6536	1583	3510	6187	521
Grp Volume(v), veh/h	322	1020	327	389	637	217	257	1225	372	356	878	326
Grp Sat Flow(s),veh/h/ln	1755	1729	1585	1755	1729	1601	1755	1634	1583	1755	1634	1806
Q Serve(g_s), s	14.9	28.0	29.8	18.1	15.7	17.6	11.9	27.1	36.1	16.5	24.7	24.9
Cycle Q Clear(g_c), s	14.9	28.0	29.8	18.1	15.7	17.6	11.9	27.1	36.1	16.5	24.7	24.9
Prop In Lane	1.00		1.00	1.00		1.00	1.00		1.00	1.00		0.29
Lane Grp Cap(c), veh/h	365	1588	485	415	1661	513	301	1876	454	397	1540	567
V/C Ratio(X)	0.88	0.64	0.67	0.94	0.38	0.42	0.85	0.65	0.82	0.90	0.57	0.57
Avail Cap(c_a), veh/h	436	1588	485	415	1661	513	426	1876	454	426	1540	567
HCM Platoon Ratio	1.00	1.00	1.00	1.00	1.00	1.00	1.00	1.00	1.00	1.00	1.00	1.00
Upstream Filter(I)	1.00	1.00	1.00	1.00	1.00	1.00	0.86	0.86	0.86	1.00	1.00	1.00
Uniform Delay (d), s/veh	72.9	49.5	50.1	72.1	43.4	44.1	74.4	51.6	54.8	72.2	47.3	47.3
Incr Delay (d2), s/veh	15.0	2.0	7.3	28.6	0.7	2.5	7.3	1.5	13.2	19.6	1.5	4.2
Initial Q Delay(d3), s/veh	0.0	0.0	0.0	0.0	0.0	0.0	0.0	0.0	0.0	0.0	0.0	0.0
%ile BackOfQ(50%),veh/ln	7.3	12.1	12.4	9.6	6.7	7.2	5.6	11.1	15.6	8.4	10.1	11.6
Unsig. Movement Delay, s/veh												
LnGrp Delay(d), s/veh	87.9	51.5	57.4	100.7	44.1	46.6	81.7	53.1	68.1	91.8	48.8	51.5
LnGrp LOS	F	D	E	F	D	D	F	D	E	F	D	D
Approach Vol, veh/h		1669			1243			1854			1560	
Approach Delay, s/veh		59.7			62.3			60.1			59.2	
Approach LOS		E			E			E			E	

Timer - Assigned Phs	1	2	3	4	5	6	7	8
Phs Duration (G+Y+Rc), s	25.6	54.4	27.0	58.0	21.2	58.8	24.6	60.4
Change Period (Y+Rc), s	7.0	7.0	7.5	7.5	7.0	7.0	7.5	7.5
Max Green Setting (Gmax), s	20.6	46.0	19.5	50.5	20.0	46.0	20.5	49.5
Max Q Clear Time (g_c+I1), s	18.5	38.1	20.1	31.8	13.9	26.9	16.9	19.6
Green Ext Time (p_c), s	0.1	5.6	0.0	7.2	0.2	8.4	0.2	4.8

Intersection Summary	
HCM 6th Ctrl Delay, s/veh	60.2
HCM 6th LOS	E



Movement	EBL	EBT	EBR	WBL	WBT	WBR	NBL	NBT	NBR	SBL	SBT	SBR
Lane Configurations	fl	++	r	fl	++	r	'i'i	tttt	r	'i'i	tttt	r
Traffic Volume (veh/h)	330	102	147	108	72	95	152	1305	103	158	1118	128
Future Volume (veh/h)	330	102	147	108	72	95	152	1305	103	158	1118	128
Initial Q (Qb), veh	0	0	0	0	0	0	0	0	0	0	0	0
Ped-Bike Adj(A_pbT)	1.00		1.00	1.00		1.00	1.00		1.00	1.00		1.00
Parking Bus, Adj	1.00	1.00	1.00	1.00	1.00	1.00	1.00	1.00	1.00	1.00	1.00	1.00
Work Zone On Approach		No			No			No			No	
Adj Sat Flow, veh/h/ln	1900	1900	1900	1900	1900	1900	1900	1900	1900	1900	1900	1900
Adj Flow Rate, veh/h	363	112	0	119	79	0	167	1434	0	174	1229	0
Peak Hour Factor	0.91	0.91	0.91	0.91	0.91	0.91	0.91	0.91	0.91	0.91	0.91	0.91
Percent Heavy Veh, %	0	0	0	0	0	0	0	0	0	0	0	0
Cap, veh/h	351	466		216	327		221	3648		228	3661	
Arrive On Green	0.10	0.13	0.00	0.06	0.09	0.00	0.06	0.56	0.00	0.07	0.56	0.00
Sat Flow, veh/h	3510	3610	1610	3510	3610	1610	3510	6536	1610	3510	6536	1610
Grp Volume(v), veh/h	363	112	0	119	79	0	167	1434	0	174	1229	0
Grp Sat Flow(s),veh/h/ln	1755	1805	1610	1755	1805	1610	1755	1634	1610	1755	1634	1610
Q Serve(g_s), s	14.5	4.0	0.0	4.8	2.9	0.0	6.8	18.0	0.0	7.1	14.8	0.0
Cycle Q Clear(g_c), s	14.5	4.0	0.0	4.8	2.9	0.0	6.8	18.0	0.0	7.1	14.8	0.0
Prop In Lane	1.00		1.00	1.00		1.00	1.00		1.00	1.00		1.00
Lane Grp Cap(c), veh/h	351	466		216	327		221	3648		228	3661	
V/C Ratio(X)	1.03	0.24		0.55	0.24		0.76	0.39		0.76	0.34	
Avail Cap(c_a), veh/h	351	1033		496	1183		484	3648		484	3661	
HCM Platoon Ratio	1.00	1.00	1.00	1.00	1.00	1.00	1.00	1.00	1.00	1.00	1.00	1.00
Upstream Filter(I)	1.00	1.00	0.00	1.00	1.00	0.00	0.90	0.90	0.00	0.70	0.70	0.00
Uniform Delay (d), s/veh	65.3	56.7	0.0	66.1	61.3	0.0	66.8	18.1	0.0	66.7	17.3	0.0
Incr Delay (d2), s/veh	57.1	0.3	0.0	2.2	0.5	0.0	4.7	0.3	0.0	3.7	0.2	0.0
Initial Q Delay(d3), s/veh	0.0	0.0	0.0	0.0	0.0	0.0	0.0	0.0	0.0	0.0	0.0	0.0
%ile BackOfQ(50%),veh/ln	9.3	1.9	0.0	2.2	1.4	0.0	3.1	6.5	0.0	3.2	5.3	0.0
Unsig. Movement Delay, s/veh												
LnGrp Delay(d), s/veh	122.4	57.1	0.0	68.3	61.7	0.0	71.5	18.4	0.0	70.4	17.4	0.0
LnGrp LOS	F	E		E	E		E	B		E	B	
Approach Vol, veh/h		475			198			1601			1403	
Approach Delay, s/veh		107.0			65.7			24.0			24.0	
Approach LOS		F			E			C			C	

Timer - Assigned Phs	1	2	3	4	5	6	7	8
Phs Duration (G+Y+Rc), s	16.4	87.9	15.4	25.2	16.1	88.2	21.0	19.7
Change Period (Y+Rc), s	7.0	7.0	6.5	6.5	7.0	7.0	6.5	6.5
Max Green Setting (Gmax), s	20.0	36.0	20.5	41.5	20.0	36.0	14.5	47.5
Max Q Clear Time (g_c+I1), s	9.1	20.0	6.8	6.0	8.8	16.8	16.5	4.9
Green Ext Time (p_c), s	0.4	9.4	0.3	0.9	0.3	9.0	0.0	0.6

Intersection Summary	
HCM 6th Ctrl Delay, s/veh	37.0
HCM 6th LOS	D

Notes

Unsignalized Delay for [NBR, EBR, WBR, SBR] is excluded from calculations of the approach delay and intersection delay.



Movement	EBL	EBT	EBR	WBL	WBT	WBR	NBL	NBT	NBR	SBL	SBT	SBR
Lane Configurations	fl	++	r	fl	++	r	'i'i	tttt	r	'i'i	tttt	r
Traffic Volume (veh/h)	230	217	298	176	80	80	264	1332	250	91	1423	81
Future Volume (veh/h)	230	217	298	176	80	80	264	1332	250	91	1423	81
Initial Q (Qb), veh	0	0	0	0	0	0	0	0	0	0	0	0
Ped-Bike Adj(A_pbT)	1.00		1.00	1.00		1.00	1.00		1.00	1.00		1.00
Parking Bus, Adj	1.00	1.00	1.00	1.00	1.00	1.00	1.00	1.00	1.00	1.00	1.00	1.00
Work Zone On Approach		No			No			No			No	
Adj Sat Flow, veh/h/ln	1900	1900	1900	1900	1900	1900	1900	1900	1900	1900	1900	1900
Adj Flow Rate, veh/h	245	231	0	187	85	0	281	1417	0	97	1514	0
Peak Hour Factor	0.94	0.94	0.94	0.94	0.94	0.94	0.94	0.94	0.94	0.94	0.94	0.94
Percent Heavy Veh, %	0	0	0	0	0	0	0	0	0	0	0	0
Cap, veh/h	294	428		260	393		329	3545		203	3309	
Arrive On Green	0.08	0.12	0.00	0.07	0.11	0.00	0.09	0.54	0.00	0.06	0.51	0.00
Sat Flow, veh/h	3510	3610	1610	3510	3610	1610	3510	6536	1610	3510	6536	1610
Grp Volume(v), veh/h	245	231	0	187	85	0	281	1417	0	97	1514	0
Grp Sat Flow(s),veh/h/ln	1755	1805	1610	1755	1805	1610	1755	1634	1610	1755	1634	1610
Q Serve(g_s), s	9.3	8.1	0.0	7.0	2.9	0.0	10.6	17.1	0.0	3.6	20.1	0.0
Cycle Q Clear(g_c), s	9.3	8.1	0.0	7.0	2.9	0.0	10.6	17.1	0.0	3.6	20.1	0.0
Prop In Lane	1.00		1.00	1.00		1.00	1.00		1.00	1.00		1.00
Lane Grp Cap(c), veh/h	294	428		260	393		329	3545		203	3309	
V/C Ratio(X)	0.83	0.54		0.72	0.22		0.85	0.40		0.48	0.46	
Avail Cap(c_a), veh/h	312	1257		286	1230		338	3545		260	3309	
HCM Platoon Ratio	1.00	1.00	1.00	1.00	1.00	1.00	1.00	1.00	1.00	1.00	1.00	1.00
Upstream Filter(I)	1.00	1.00	0.00	1.00	1.00	0.00	0.83	0.83	0.00	0.96	0.96	0.00
Uniform Delay (d), s/veh	60.9	56.0	0.0	61.1	54.9	0.0	60.3	18.1	0.0	61.6	21.4	0.0
Incr Delay (d2), s/veh	15.3	0.8	0.0	6.2	0.2	0.0	14.8	0.3	0.0	0.6	0.4	0.0
Initial Q Delay(d3), s/veh	0.0	0.0	0.0	0.0	0.0	0.0	0.0	0.0	0.0	0.0	0.0	0.0
%ile BackOfQ(50%),veh/ln	4.7	3.7	0.0	3.4	1.3	0.0	5.3	6.1	0.0	1.6	7.4	0.0
Unsig. Movement Delay, s/veh												
LnGrp Delay(d), s/veh	76.2	56.8	0.0	67.3	55.1	0.0	75.1	18.3	0.0	62.3	21.9	0.0
LnGrp LOS	E	E		E	E		E	B		E	C	
Approach Vol, veh/h		476			272			1698			1611	
Approach Delay, s/veh		66.8			63.5			27.7			24.3	
Approach LOS		E			E			C			C	

Timer - Assigned Phs	1	2	3	4	5	6	7	8
Phs Duration (G+Y+Rc), s	14.8	80.2	17.0	23.0	19.7	75.3	18.3	21.7
Change Period (Y+Rc), s	7.0	7.0	7.0	7.0	7.0	7.0	7.0	7.0
Max Green Setting (Gmax), s	10.0	39.0	11.0	47.0	13.0	36.0	12.0	46.0
Max Q Clear Time (g_c+I1), s	15.6	19.1	9.0	10.1	12.6	22.1	11.3	4.9
Green Ext Time (p_c), s	0.0	9.3	0.1	1.1	0.0	8.0	0.0	0.5

Intersection Summary	
HCM 6th Ctrl Delay, s/veh	33.3
HCM 6th LOS	C

Notes

Unsignalized Delay for [NBR, EBR, WBR, SBR] is excluded from calculations of the approach delay and intersection delay.

> - ■>< ← < A t MJ 7

Movement	EBL	EBT	EBR	WBL	WBT	WBR	NBL	NBT	NBR	SBL	SBT	SBR
Lane Configurations	Vi	↑	f	vs	++	r	's'i	tttt	r	's'i	tttt	↱
Traffic Volume (veh/h)	712	179	583	217	211	37	319	919	375	248	1019	533
Future Volume (veh/h)	712	179	583	217	211	37	319	919	375	248	1019	533
Initial Q (Qb), veh	0	0	0	0	0	0	0	0	0	0	0	0
Ped-Bike Adj(A_pbT)	1.00		1.00	1.00		1.00	1.00		0.99	1.00		1.00
Parking Bus, Adj	1.00	1.00	1.00	1.00	1.00	1.00	1.00	1.00	1.00	1.00	1.00	1.00
Work Zone On Approach		No			No			No			No	
Adj Sat Flow, veh/h/ln	1900	1900	1900	1900	1900	1900	1900	1900	1900	1900	1900	1900
Adj Flow Rate, veh/h	734	185	601	224	218	38	329	947	387	256	1051	549
Peak Hour Factor	0.97	0.97	0.97	0.97	0.97	0.97	0.97	0.97	0.97	0.97	0.97	0.97
Percent Heavy Veh, %	0	0	0	0	0	0	0	0	0	0	0	0
Cap, veh/h	847	563	477	315	523	233	383	2451	744	306	2308	957
Arrive On Green	0.24	0.30	0.30	0.09	0.14	0.14	0.11	0.37	0.37	0.09	0.35	0.35
Sat Flow, veh/h	3510	1900	1610	3510	3610	1610	3510	6536	1600	3510	6536	1610
Grp Volume(v), veh/h	734	185	601	224	218	38	329	947	387	256	1051	549
Grp Sat Flow(s),veh/h/ln	1755	1900	1610	1755	1805	1610	1755	1634	1600	1755	1634	1610
Q Serve(g_s), s	29.1	11.0	43.0	9.0	8.0	3.0	13.4	15.4	24.8	10.4	18.0	30.4
Cycle Q Clear(g_c), s	29.1	11.0	43.0	9.0	8.0	3.0	13.4	15.4	24.8	10.4	18.0	30.4
Prop In Lane	1.00		1.00	1.00		1.00	1.00		1.00	1.00		1.00
Lane Grp Cap(c), veh/h	847	563	477	315	523	233	383	2451	744	306	2308	957
V/C Ratio(X)	0.87	0.33	1.26	0.71	0.42	0.16	0.86	0.39	0.52	0.84	0.46	0.57
Avail Cap(c_a), veh/h	847	563	477	315	523	233	629	2451	744	436	2308	957
HCM Platoon Ratio	1.00	1.00	1.00	1.00	1.00	1.00	1.00	1.00	1.00	1.00	1.00	1.00
Upstream Filter(I)	1.00	1.00	1.00	1.00	1.00	1.00	0.94	0.94	0.94	0.90	0.90	0.90
Uniform Delay (d), s/veh	52.8	39.7	51.0	64.2	56.4	54.3	63.5	33.1	27.4	65.2	36.2	18.1
Incr Delay (d2), s/veh	11.5	0.1	132.5	12.8	0.2	0.1	3.2	0.4	2.4	6.1	0.6	2.2
Initial Q Delay(d3), s/veh	0.0	0.0	0.0	0.0	0.0	0.0	0.0	0.0	0.0	0.0	0.0	0.0
%ile BackOfQ(50%),veh/ln	14.1	5.2	34.5	4.5	3.6	1.2	6.0	6.0	9.8	4.8	7.1	11.4
Unsig. Movement Delay, s/veh												
LnGrp Delay(d), s/veh	64.3	39.9	183.5	77.0	56.6	54.4	66.7	33.6	29.9	71.2	36.7	20.3
LnGrp LOS	E	D	F	E	E	D	E	C	C	E	D	C
Approach Vol, veh/h		1520			480			1663			1856	
Approach Delay, s/veh		108.5			66.0			39.2			36.6	
Approach LOS		F			E			D			D	

Timer - Assigned Phs	1	2	3	4	5	6	7	8
Phs Duration (G+Y+Rc), s	17.6	60.4	18.0	49.0	20.8	57.2	40.0	27.0
Change Period (Y+Rc), s	5.0	6.0	5.0	6.0	5.0	6.0	5.0	6.0
Max Green Setting (Gmax), s	18.6	49.0	13.0	43.0	26.0	41.0	35.0	21.0
Max Q Clear Time (g_c+I1), s	12.4	26.8	11.0	45.0	15.4	32.4	31.1	10.0
Green Ext Time (p_c), s	0.2	4.6	0.1	0.0	0.4	3.8	0.7	0.6

Intersection Summary	
HCM 6th Ctrl Delay, s/veh	59.8
HCM 6th LOS	E

Notes

User approved pedestrian interval to be less than phase max green.



Movement	EBL	EBR	NBL	NBT	SBT	SBR
Lane Configurations						
Traffic Volume (veh/h)	313	309	454	1300	1099	688
Future Volume (veh/h)	313	309	454	1300	1099	688
Initial Q (Qb), veh	0	0	0	0	0	0
Ped-Bike Adj(A_pbT)	1.00	1.00	1.00			1.00
Parking Bus, Adj	1.00	1.00	1.00	1.00	1.00	1.00
Work Zone On Approach	No			No	No	
Adj Sat Flow, veh/h/ln	1900	1900	1900	1900	1900	1900
Adj Flow Rate, veh/h	333	329	483	1383	1169	732
Peak Hour Factor	0.94	0.94	0.94	0.94	0.94	0.94
Percent Heavy Veh, %	0	0	0	0	0	0
Cap, veh/h	1255	830	554	3584	2335	1151
Arrive On Green	0.36	0.36	0.16	0.55	0.36	0.36
Sat Flow, veh/h	3510	1610	3510	6802	6802	1610
Grp Volume(v), veh/h	333	329	483	1383	1169	732
Grp Sat Flow(s),veh/h/ln	1755	1610	1755	1634	1634	1610
Q Serve(g_s), s	8.1	14.9	16.1	14.5	16.8	28.5
Cycle Q Clear(g_c), s	8.1	14.9	16.1	14.5	16.8	28.5
Prop In Lane	1.00	1.00	1.00			1.00
Lane Grp Cap(c), veh/h	1255	830	554	3584	2335	1151
V/C Ratio(X)	0.27	0.40	0.87	0.39	0.50	0.64
Avail Cap(c_a), veh/h	1255	830	1053	3584	2335	1151
HCM Platoon Ratio	1.00	1.00	1.00	1.00	1.00	1.00
Upstream Filter(I)	1.00	1.00	0.81	0.81	0.70	0.70
Uniform Delay (d), s/veh	27.4	17.7	49.4	15.5	30.2	8.9
Incr Delay (d2), s/veh	0.5	1.4	1.4	0.3	0.5	1.9
Initial Q Delay(d3), s/veh	0.0	0.0	0.0	0.0	0.0	0.0
%ile BackOfQ(50%),veh/ln	8.5	16.6	6.9	5.0	6.4	22.2
Unsig. Movement Delay, s/veh						
LnGrp Delay(d), s/veh	27.9	19.1	50.8	15.8	30.7	10.8
LnGrp LOS	C	B	D	B	C	B
Approach Vol, veh/h	662			1866	1901	
Approach Delay, s/veh	23.5			24.8	23.1	
Approach LOS	C			C	C	

Timer - Assigned Phs		2		4	5	6
Phs Duration (G+Y+Rc), s		72.0		48.0	22.9	49.1
Change Period (Y+Rc), s		6.2		5.1	4.0	6.2
Max Green Setting (Gmax), s		65.8		42.9	36.0	25.8
Max Q Clear Time (g_c+I1), s		16.5		16.9	18.1	30.5
Green Ext Time (p_c), s		7.0		1.2	0.8	0.0

Intersection Summary		
HCM 6th Ctrl Delay, s/veh		23.9
HCM 6th LOS		C

> - ■>< ← < A t MJ 7

Movement	EBL	EBT	EBR	WBL	WBT	WBR	NBL	NBT	NBR	SBL	SBT	SBR
Lane Configurations	Vs	↟		3+	_r_	!i		tttfc		'i's	M+	?
Traffic Volume (veh/h)	273	23	154	85	21	182	121	1219	123	304	785	318
Future Volume (veh/h)	273	23	154	85	21	182	121	1219	123	304	785	318
Initial Q (Qb), veh	0	0	0	0	0	0	0	0	0	0	0	0
Ped-Bike Adj(A_pbT)	1.00		1.00	1.00		0.98	1.00		1.00	1.00		1.00
Parking Bus, Adj	1.00	1.00	1.00	1.00	1.00	1.00	1.00	1.00	1.00	1.00	1.00	1.00
Work Zone On Approach		No			No			No			No	
Adj Sat Flow, veh/h/ln	1900	1900	1900	1900	1900	1900	1900	1900	1900	1900	1900	1900
Adj Flow Rate, veh/h	294	25	166	91	23	196	130	1311	132	327	844	0
Peak Hour Factor	0.93	0.93	0.93	0.93	0.93	0.93	0.93	0.93	0.93	0.93	0.93	0.93
Percent Heavy Veh, %	0	0	0	0	0	0	0	0	0	0	0	0
Cap, veh/h	347	45	299	130	346	287	152	2873	288	234	2361	
Arrive On Green	0.10	0.21	0.21	0.07	0.18	0.18	0.08	0.47	0.47	0.07	0.46	0.00
Sat Flow, veh/h	3510	215	1428	1810	1900	1578	1810	6081	610	3510	5187	1610
Grp Volume(v), veh/h	294	0	191	91	23	196	130	1056	387	327	844	0
Grp Sat Flow(s),veh/h/ln	1755	0	1643	1810	1900	1578	1810	1634	1789	1755	1729	1610
Q Serve(g_s), s	12.4	0.0	15.6	7.4	1.5	17.4	10.6	21.7	21.8	10.0	15.9	0.0
Cycle Q Clear(g_c), s	12.4	0.0	15.6	7.4	1.5	17.4	10.6	21.7	21.8	10.0	15.9	0.0
Prop In Lane	1.00		0.87	1.00		1.00	1.00		0.34	1.00		1.00
Lane Grp Cap(c), veh/h	347	0	344	130	346	287	152	2316	845	234	2361	
V/C Ratio(X)	0.85	0.00	0.56	0.70	0.07	0.68	0.86	0.46	0.46	1.40	0.36	
Avail Cap(c_a), veh/h	410	0	553	235	665	552	157	2316	845	234	2361	
HCM Platoon Ratio	1.00	1.00	1.00	1.00	1.00	1.00	1.00	1.00	1.00	1.00	1.00	1.00
Upstream Filter(I)	1.00	0.00	1.00	1.00	1.00	1.00	1.00	1.00	1.00	0.84	0.84	0.00
Uniform Delay (d), s/veh	66.5	0.0	53.1	68.1	50.8	57.3	67.8	26.6	26.6	70.0	26.6	0.0
Incr Delay (d2), s/veh	14.5	0.0	2.0	9.4	0.1	4.0	34.9	0.6	1.8	199.2	0.4	0.0
Initial Q Delay(d3), s/veh	0.0	0.0	0.0	0.0	0.0	0.0	0.0	0.0	0.0	0.0	0.0	0.0
%ile BackOfQ(50%),veh/ln	6.3	0.0	6.7	3.8	0.7	7.3	6.3	8.3	9.4	10.9	6.4	0.0
Unsig. Movement Delay, s/veh												
LnGrp Delay(d), s/veh	81.0	0.0	55.1	77.4	50.9	61.3	102.7	27.2	28.4	269.2	26.9	0.0
LnGrp LOS	F		E	E	D	E	F	C	C	F	C	
Approach Vol, veh/h		485			310			1573			1171	
Approach Delay, s/veh		70.8			65.3			33.8			94.6	
Approach LOS		E			E			C			F	

Timer - Assigned Phs	1	2	3	4	5	6	7	8
Phs Duration (G+Y+Rc), s	17.0	77.9	17.3	37.9	19.6	75.3	21.3	33.8
Change Period (Y+Rc), s	7.0	7.0	6.5	6.5	7.0	7.0	6.5	6.5
Max Green Setting (Gmax), s	10.0	43.0	19.5	50.5	13.0	40.0	17.5	52.5
Max Q Clear Time (g_c+I1), s	12.0	23.8	9.4	17.6	12.6	17.9	14.4	19.4
Green Ext Time (p_c), s	0.0	12.7	0.2	1.9	0.0	8.4	0.5	1.3

Intersection Summary	
HCM 6th Ctrl Delay, s/veh	61.7
HCM 6th LOS	E

Notes

Unsignalized Delay for [SBR] is excluded from calculations of the approach delay and intersection delay.

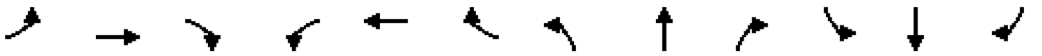

Movement	EBL	EBT	EBR	WBL	WBT	WBR	NBL	NBT	NBR	SBL	SBT	SBR
Lane Configurations												
Traffic Volume (veh/h)	53	0	59	11	0	9	192	780	40	16	1117	8
Future Volume (veh/h)	53	0	59	11	0	9	192	780	40	16	1117	8
Initial Q (Qb), veh	0	0	0	0	0	0	0	0	0	0	0	0
Ped-Bike Adj(A_pbT)	1.00		1.00	1.00		1.00	1.00		1.00	1.00		0.98
Parking Bus, Adj	1.00	1.00	1.00	1.00	1.00	1.00	1.00	1.00	1.00	1.00	1.00	1.00
Work Zone On Approach		No			No			No			No	
Adj Sat Flow, veh/h/ln	1900	1900	1900	1900	1900	1900	1900	1900	1900	1900	1900	1900
Adj Flow Rate, veh/h	56	0	63	12	0	10	204	830	43	17	1188	9
Peak Hour Factor	0.94	0.94	0.94	0.94	0.94	0.94	0.94	0.94	0.94	0.94	0.94	0.94
Percent Heavy Veh, %	0	0	0	0	0	0	0	0	0	0	0	0
Cap, veh/h	162	0	114	114	0	114	224	3818	197	34	3456	26
Arrive On Green	0.07	0.00	0.07	0.07	0.00	0.07	0.12	0.76	0.76	0.02	0.65	0.65
Sat Flow, veh/h	1427	0	1610	1360	0	1610	1810	5050	261	1810	5310	40
Grp Volume(v), veh/h	56	0	63	12	0	10	204	568	305	17	774	423
Grp Sat Flow(s),veh/h/ln	1427	0	1610	1360	0	1610	1810	1729	1853	1810	1729	1892
Q Serve(g_s), s	4.0	0.0	4.0	0.9	0.0	0.6	11.7	5.0	5.1	1.0	10.6	10.6
Cycle Q Clear(g_c), s	4.6	0.0	4.0	4.9	0.0	0.6	11.7	5.0	5.1	1.0	10.6	10.6
Prop In Lane	1.00		1.00	1.00		1.00	1.00		0.14	1.00		0.02
Lane Grp Cap(c), veh/h	162	0	114	114	0	114	224	2615	1401	34	2251	1231
V/C Ratio(X)	0.35	0.00	0.55	0.11	0.00	0.09	0.91	0.22	0.22	0.50	0.34	0.34
Avail Cap(c_a), veh/h	479	0	472	416	0	472	224	2615	1401	224	2251	1231
HCM Platoon Ratio	1.00	1.00	1.00	1.00	1.00	1.00	1.00	1.00	1.00	1.00	1.00	1.00
Upstream Filter(I)	1.00	0.00	1.00	1.00	0.00	1.00	0.95	0.95	0.95	1.00	1.00	1.00
Uniform Delay (d), s/veh	47.8	0.0	47.2	49.5	0.0	45.6	45.4	3.7	3.7	51.0	8.2	8.2
Incr Delay (d2), s/veh	2.7	0.0	8.6	0.9	0.0	0.7	36.7	0.2	0.3	22.8	0.4	0.8
Initial Q Delay(d3), s/veh	0.0	0.0	0.0	0.0	0.0	0.0	0.0	0.0	0.0	0.0	0.0	0.0
%ile BackOfQ(50%),veh/ln	1.6	0.0	1.9	0.3	0.0	0.3	7.3	1.2	1.4	0.6	3.3	3.8
Unsig. Movement Delay, s/veh												
LnGrp Delay(d), s/veh	50.5	0.0	55.7	50.4	0.0	46.3	82.2	3.9	4.1	73.9	8.7	9.0
LnGrp LOS	D		E	D		D	F	A	A	E	A	A
Approach Vol, veh/h		119			22			1077			1214	
Approach Delay, s/veh		53.3			48.5			18.8			9.7	
Approach LOS		D			D			B			A	

Timer - Assigned Phs	1	2		4	5	6		8				
Phs Duration (G+Y+Rc), s	6.0	85.4		13.7	17.0	74.3		13.7				
Change Period (Y+Rc), s	4.0	6.0		6.2	4.0	6.0		6.2				
Max Green Setting (Gmax), s	13.0	45.0		30.8	13.0	45.0		30.8				
Max Q Clear Time (g_c+I1), s	3.0	7.1		6.6	13.7	12.6		6.9				
Green Ext Time (p_c), s	0.0	11.9		1.0	0.0	16.3		0.1				

Intersection Summary			
HCM 6th Ctrl Delay, s/veh		16.2	
HCM 6th LOS		B	

> - ■>< ← < A t / VI 7

Movement	EBL	EBT	EBR	WBL	WBT	WBR	NBL	NBT	NBR	SBL	SBT	SBR
Lane Configurations	*i*i	ttt	i*	↰↰	++	f	*i*i	ttt	i*	*i*i	+++	↱
Traffic Volume (veh/h)	128	233	103	80	265	101	155	814	106	133	782	273
Future Volume (veh/h)	128	233	103	80	265	101	155	814	106	133	782	273
Initial Q (Qb), veh	0	0	0	0	0	0	0	0	0	0	0	0
Ped-Bike Adj(A_pbT)	1.00		1.00	1.00		1.00	1.00		1.00	1.00		1.00
Parking Bus, Adj	1.00	1.00	1.00	1.00	1.00	1.00	1.00	1.00	1.00	1.00	1.00	1.00
Work Zone On Approach		No			No			No			No	
Adj Sat Flow, veh/h/ln	1900	1900	1900	1900	1900	1900	1900	1900	1900	1900	1900	1900
Adj Flow Rate, veh/h	138	251	111	86	285	109	167	875	114	143	841	294
Peak Hour Factor	0.93	0.93	0.93	0.93	0.93	0.93	0.93	0.93	0.93	0.93	0.93	0.93
Percent Heavy Veh, %	0	0	0	0	0	0	0	0	0	0	0	0
Cap, veh/h	201	671	208	148	412	183	191	2974	923	206	2996	930
Arrive On Green	0.06	0.13	0.13	0.04	0.11	0.11	0.05	0.57	0.57	0.06	0.58	0.58
Sat Flow, veh/h	3510	5187	1610	3510	3610	1606	3510	5187	1610	3510	5187	1609
Grp Volume(v), veh/h	138	251	111	86	285	109	167	875	114	143	841	294
Grp Sat Flow(s),veh/h/ln	1755	1729	1610	1755	1805	1606	1755	1729	1610	1755	1729	1609
Q Serve(g_s), s	4.2	4.9	7.1	2.6	8.4	7.1	5.2	9.5	3.6	4.4	9.0	10.4
Cycle Q Clear(g_c), s	4.2	4.9	7.1	2.6	8.4	7.1	5.2	9.5	3.6	4.4	9.0	10.4
Prop In Lane	1.00		1.00	1.00		1.00	1.00		1.00	1.00		1.00
Lane Grp Cap(c), veh/h	201	671	208	148	412	183	191	2974	923	206	2996	930
V/C Ratio(X)	0.69	0.37	0.53	0.58	0.69	0.59	0.87	0.29	0.12	0.69	0.28	0.32
Avail Cap(c_a), veh/h	351	1575	489	351	1096	488	191	2974	923	351	2996	930
HCM Platoon Ratio	1.00	1.00	1.00	1.00	1.00	1.00	1.00	1.00	1.00	1.00	1.00	1.00
Upstream Filter(I)	1.00	1.00	1.00	1.00	1.00	1.00	1.00	1.00	1.00	0.92	0.92	0.92
Uniform Delay (d), s/veh	50.9	43.8	44.8	51.7	46.9	46.3	51.6	12.0	10.8	50.8	11.7	12.0
Incr Delay (d2), s/veh	4.1	0.3	2.1	3.6	2.1	3.1	32.7	0.3	0.3	3.8	0.2	0.8
Initial Q Delay(d3), s/veh	0.0	0.0	0.0	0.0	0.0	0.0	0.0	0.0	0.0	0.0	0.0	0.0
%ile BackOfQ(50%),veh/ln	1.9	2.0	2.9	1.2	3.8	2.9	3.1	3.3	1.2	2.0	3.1	3.6
Unsig. Movement Delay, s/veh												
LnGrp Delay(d), s/veh	55.0	44.2	46.9	55.3	48.9	49.3	84.3	12.3	11.0	54.6	11.9	12.8
LnGrp LOS	E	D	D	E	D	D	F	B	B	D	B	B
Approach Vol, veh/h		500			480			1156			1278	
Approach Delay, s/veh		47.8			50.2			22.6			16.9	
Approach LOS		D			D			C			B	

Timer - Assigned Phs	1	2	3	4	5	6	7	8
Phs Duration (G+Y+Rc), s	10.5	70.1	8.6	20.8	10.0	70.5	10.3	19.2
Change Period (Y+Rc), s	4.0	7.0	4.0	* 6.6	4.0	7.0	4.0	* 6.6
Max Green Setting (Gmax), s	6.5	33.0	11.0	* 33	6.0	38.0	11.0	* 33
Max Q Clear Time (g_c+I1), s	6.4	11.5	4.6	9.1	7.2	12.4	6.2	10.4
Green Ext Time (p_c), s	0.1	5.9	0.1	1.8	0.0	6.7	0.1	1.9

Intersection Summary	
HCM 6th Ctrl Delay, s/veh	28.0
HCM 6th LOS	C

Notes

* HCM 6th computational engine requires equal clearance times for the phases crossing the barrier.

> - ■>< ← < A t MJ 7

Movement	EBL	EBT	EBR	WBL	WBT	WBR	NBL	NBT	NBR	SBL	SBT	SBR
Lane Configurations	'i's	+++	r	'i's	+++	f	Vi	tttt	f	Vi	ttti*	
Traffic Volume (veh/h)	115	262	135	412	901	301	181	822	128	153	849	69
Future Volume (veh/h)	115	262	135	412	901	301	181	822	128	153	849	69
Initial Q (Qb), veh	0	0	0	0	0	0	0	0	0	0	0	0
Ped-Bike Adj(A_pbT)	1.00		1.00	1.00		1.00	1.00		0.99	1.00		0.98
Parking Bus, Adj	1.00	1.00	1.00	1.00	1.00	1.00	1.00	1.00	1.00	1.00	1.00	1.00
Work Zone On Approach		No			No			No			No	
Adj Sat Flow, veh/h/ln	1900	1900	1900	1900	1900	1900	1900	1900	1900	1900	1900	1900
Adj Flow Rate, veh/h	129	294	152	463	1012	338	203	924	144	172	954	78
Peak Hour Factor	0.89	0.89	0.89	0.89	0.89	0.89	0.89	0.89	0.89	0.89	0.89	0.89
Percent Heavy Veh, %	0	0	0	0	0	0	0	0	0	0	0	0
Cap, veh/h	233	1588	492	415	1856	576	247	2212	538	216	2043	166
Arrive On Green	0.07	0.31	0.31	0.12	0.36	0.36	0.07	0.34	0.34	0.06	0.33	0.33
Sat Flow, veh/h	3510	5187	1607	3510	5187	1610	3510	6536	1588	3510	6200	502
Grp Volume(v), veh/h	129	294	152	463	1012	338	203	924	144	172	752	280
Grp Sat Flow(s),veh/h/ln	1755	1729	1607	1755	1729	1610	1755	1634	1588	1755	1634	1800
Q Serve(g_s), s	5.9	6.9	12.0	19.5	25.7	28.2	9.4	18.0	10.9	8.0	20.1	20.3
Cycle Q Clear(g_c), s	5.9	6.9	12.0	19.5	25.7	28.2	9.4	18.0	10.9	8.0	20.1	20.3
Prop In Lane	1.00		1.00	1.00		1.00	1.00		1.00	1.00		0.28
Lane Grp Cap(c), veh/h	233	1588	492	415	1856	576	247	2212	538	216	1615	593
V/C Ratio(X)	0.55	0.19	0.31	1.12	0.55	0.59	0.82	0.42	0.27	0.80	0.47	0.47
Avail Cap(c_a), veh/h	436	1588	492	415	1856	576	426	2212	538	426	1615	593
HCM Platoon Ratio	1.00	1.00	1.00	1.00	1.00	1.00	1.00	1.00	1.00	1.00	1.00	1.00
Upstream Filter(I)	1.00	1.00	1.00	1.00	1.00	1.00	0.98	0.98	0.98	1.00	1.00	1.00
Uniform Delay (d), s/veh	74.6	42.1	43.9	72.7	42.3	43.1	75.7	42.1	39.7	76.4	43.8	43.9
Incr Delay (d2), s/veh	0.8	0.3	1.6	79.6	1.2	4.3	2.5	0.6	1.2	2.5	1.0	2.7
Initial Q Delay(d3), s/veh	0.0	0.0	0.0	0.0	0.0	0.0	0.0	0.0	0.0	0.0	0.0	0.0
%ile BackOfQ(50%),veh/ln	2.6	2.9	4.9	13.1	10.9	11.6	4.3	7.2	4.3	3.6	8.1	9.4
Unsig. Movement Delay, s/veh												
LnGrp Delay(d), s/veh	75.4	42.4	45.5	152.3	43.4	47.4	78.2	42.6	40.9	78.9	44.8	46.6
LnGrp LOS	E	D	D	F	D	D	E	D	D	E	D	D
Approach Vol, veh/h		575			1813			1271			1204	
Approach Delay, s/veh		50.6			72.0			48.1			50.1	
Approach LOS		D			E			D			D	

Timer - Assigned Phs	1	2	3	4	5	6	7	8
Phs Duration (G+Y+Rc), s	17.2	62.8	27.0	58.0	18.6	61.4	18.5	66.5
Change Period (Y+Rc), s	7.0	7.0	7.5	7.5	7.0	7.0	7.5	7.5
Max Green Setting (Gmax), s	20.0	46.0	19.5	50.5	20.0	46.0	20.5	49.5
Max Q Clear Time (g_c+I1), s	10.0	20.0	21.5	14.0	11.4	22.3	7.9	30.2
Green Ext Time (p_c), s	0.2	8.2	0.0	2.2	0.2	7.8	0.1	7.3

Intersection Summary	
HCM 6th Ctrl Delay, s/veh	57.8
HCM 6th LOS	E



Movement	EBL	EBT	EBR	WBL	WBT	WBR	NBL	NBT	NBR	SBL	SBT	SBR
Lane Configurations	fl	++	r	fl	++	r	'i'i	tttt	r	'i'i	tttt	r
Traffic Volume (veh/h)	76	32	61	50	54	58	109	927	39	57	962	259
Future Volume (veh/h)	76	32	61	50	54	58	109	927	39	57	962	259
Initial Q (Qb), veh	0	0	0	0	0	0	0	0	0	0	0	0
Ped-Bike Adj(A_pbT)	1.00		1.00	1.00		1.00	1.00		1.00	1.00		1.00
Parking Bus, Adj	1.00	1.00	1.00	1.00	1.00	1.00	1.00	1.00	1.00	1.00	1.00	1.00
Work Zone On Approach		No			No			No			No	
Adj Sat Flow, veh/h/ln	1900	1900	1900	1900	1900	1900	1900	1900	1900	1900	1900	1900
Adj Flow Rate, veh/h	81	34	0	53	57	0	116	986	0	61	1023	0
Peak Hour Factor	0.94	0.94	0.94	0.94	0.94	0.94	0.94	0.94	0.94	0.94	0.94	0.94
Percent Heavy Veh, %	0	0	0	0	0	0	0	0	0	0	0	0
Cap, veh/h	210	272		192	254		168	4180		155	4155	
Arrive On Green	0.06	0.08	0.00	0.05	0.07	0.00	0.05	0.64	0.00	0.04	0.64	0.00
Sat Flow, veh/h	3510	3610	1610	3510	3610	1610	3510	6536	1610	3510	6536	1610
Grp Volume(v), veh/h	81	34	0	53	57	0	116	986	0	61	1023	0
Grp Sat Flow(s),veh/h/ln	1755	1805	1610	1755	1805	1610	1755	1634	1610	1755	1634	1610
Q Serve(g_s), s	3.2	1.3	0.0	2.1	2.2	0.0	4.7	9.3	0.0	2.5	9.8	0.0
Cycle Q Clear(g_c), s	3.2	1.3	0.0	2.1	2.2	0.0	4.7	9.3	0.0	2.5	9.8	0.0
Prop In Lane	1.00		1.00	1.00		1.00	1.00		1.00	1.00		1.00
Lane Grp Cap(c), veh/h	210	272		192	254		168	4180		155	4155	
V/C Ratio(X)	0.39	0.12		0.28	0.22		0.69	0.24		0.39	0.25	
Avail Cap(c_a), veh/h	496	1033		496	1033		169	4180		169	4155	
HCM Platoon Ratio	1.00	1.00	1.00	1.00	1.00	1.00	1.00	1.00	1.00	1.00	1.00	1.00
Upstream Filter(I)	1.00	1.00	0.00	1.00	1.00	0.00	0.98	0.98	0.00	0.71	0.71	0.00
Uniform Delay (d), s/veh	65.6	62.6	0.0	65.8	63.6	0.0	68.0	11.1	0.0	67.4	11.4	0.0
Incr Delay (d2), s/veh	1.4	0.2	0.0	0.8	0.5	0.0	11.0	0.1	0.0	1.2	0.1	0.0
Initial Q Delay(d3), s/veh	0.0	0.0	0.0	0.0	0.0	0.0	0.0	0.0	0.0	0.0	0.0	0.0
%ile BackOfQ(50%),veh/ln	1.5	0.6	0.0	1.0	1.0	0.0	2.3	3.2	0.0	1.1	3.3	0.0
Unsig. Movement Delay, s/veh												
LnGrp Delay(d), s/veh	67.0	62.8	0.0	66.5	64.2	0.0	79.0	11.2	0.0	68.6	11.5	0.0
LnGrp LOS	E	E		E	E		E	B		E	B	
Approach Vol, veh/h		115			110			1102			1084	
Approach Delay, s/veh		65.8			65.3			18.4			14.7	
Approach LOS		E			E			B			B	

Timer - Assigned Phs	1	2	3	4	5	6	7	8
Phs Duration (G+Y+Rc), s	13.4	99.7	14.4	17.4	13.9	99.2	15.2	16.7
Change Period (Y+Rc), s	7.0	7.0	6.5	6.5	7.0	7.0	6.5	6.5
Max Green Setting (Gmax), s	7.0	49.0	20.5	41.5	7.0	49.0	20.5	41.5
Max Q Clear Time (g_c+I1), s	4.5	11.3	4.1	3.3	6.7	11.8	5.2	4.2
Green Ext Time (p_c), s	0.0	8.9	0.1	0.2	0.0	9.3	0.2	0.4

Intersection Summary	
HCM 6th Ctrl Delay, s/veh	21.1
HCM 6th LOS	C

Notes

Unsignalized Delay for [NBR, EBR, WBR, SBR] is excluded from calculations of the approach delay and intersection delay.



Movement	EBL	EBT	EBR	WBL	WBT	WBR	NBL	NBT	NBR	SBL	SBT	SBR
Lane Configurations	fl	++	r	fl	++	r	'i'i	tttt	r	'i'i	tttt	r
Traffic Volume (veh/h)	49	43	78	59	78	24	319	1074	67	31	966	129
Future Volume (veh/h)	49	43	78	59	78	24	319	1074	67	31	966	129
Initial Q (Qb), veh	0	0	0	0	0	0	0	0	0	0	0	0
Ped-Bike Adj(A_pbT)	1.00		1.00	1.00		1.00	1.00		1.00	1.00		1.00
Parking Bus, Adj	1.00	1.00	1.00	1.00	1.00	1.00	1.00	1.00	1.00	1.00	1.00	1.00
Work Zone On Approach		No			No			No			No	
Adj Sat Flow, veh/h/ln	1900	1900	1900	1900	1900	1900	1900	1900	1900	1900	1900	1900
Adj Flow Rate, veh/h	52	45	0	62	82	0	336	1131	0	33	1017	0
Peak Hour Factor	0.95	0.95	0.95	0.95	0.95	0.95	0.95	0.95	0.95	0.95	0.95	0.95
Percent Heavy Veh, %	0	0	0	0	0	0	0	0	0	0	0	0
Cap, veh/h	223	267		235	279		364	3985		148	3582	
Arrive On Green	0.06	0.07	0.00	0.07	0.08	0.00	0.10	0.61	0.00	0.04	0.55	0.00
Sat Flow, veh/h	3510	3610	1610	3510	3610	1610	3510	6536	1610	3510	6536	1610
Grp Volume(v), veh/h	52	45	0	62	82	0	336	1131	0	33	1017	0
Grp Sat Flow(s),veh/h/ln	1755	1805	1610	1755	1805	1610	1755	1634	1610	1755	1634	1610
Q Serve(g_s), s	1.9	1.6	0.0	2.3	2.9	0.0	12.8	11.0	0.0	1.2	11.2	0.0
Cycle Q Clear(g_c), s	1.9	1.6	0.0	2.3	2.9	0.0	12.8	11.0	0.0	1.2	11.2	0.0
Prop In Lane	1.00		1.00	1.00		1.00	1.00		1.00	1.00		1.00
Lane Grp Cap(c), veh/h	223	267		235	279		364	3985		148	3582	
V/C Ratio(X)	0.23	0.17		0.26	0.29		0.92	0.28		0.22	0.28	
Avail Cap(c_a), veh/h	312	1177		312	1177		364	3985		234	3582	
HCM Platoon Ratio	1.00	1.00	1.00	1.00	1.00	1.00	1.00	1.00	1.00	1.00	1.00	1.00
Upstream Filter(I)	1.00	1.00	0.00	1.00	1.00	0.00	0.93	0.93	0.00	0.98	0.98	0.00
Uniform Delay (d), s/veh	60.1	58.6	0.0	59.8	58.8	0.0	60.0	12.4	0.0	62.5	16.3	0.0
Incr Delay (d2), s/veh	0.2	0.2	0.0	0.2	0.4	0.0	26.7	0.2	0.0	0.3	0.2	0.0
Initial Q Delay(d3), s/veh	0.0	0.0	0.0	0.0	0.0	0.0	0.0	0.0	0.0	0.0	0.0	0.0
%ile BackOfQ(50%),veh/ln	0.8	0.7	0.0	1.0	1.4	0.0	6.9	3.8	0.0	0.5	4.0	0.0
Unsig. Movement Delay, s/veh												
LnGrp Delay(d), s/veh	60.3	58.8	0.0	60.1	59.2	0.0	86.7	12.6	0.0	62.8	16.5	0.0
LnGrp LOS	E	E		E	E		F	B		E	B	
Approach Vol, veh/h		97			144			1467			1050	
Approach Delay, s/veh		59.6			59.6			29.6			18.0	
Approach LOS		E			E			C			B	

Timer - Assigned Phs	1	2	3	4	5	6	7	8
Phs Duration (G+Y+Rc), s	12.7	89.3	16.0	17.0	21.0	81.0	15.6	17.4
Change Period (Y+Rc), s	7.0	7.0	7.0	7.0	7.0	7.0	7.0	7.0
Max Green Setting (Gmax), s	9.0	42.0	12.0	44.0	14.0	37.0	12.0	44.0
Max Q Clear Time (g_c+I1), s	3.2	13.0	4.3	3.6	14.8	13.2	3.9	4.9
Green Ext Time (p_c), s	0.0	8.2	0.0	0.2	0.0	6.7	0.0	0.4

Intersection Summary	
HCM 6th Ctrl Delay, s/veh	27.8
HCM 6th LOS	C

Notes

Unsignalized Delay for [NBR, EBR, WBR, SBR] is excluded from calculations of the approach delay and intersection delay.

> - ■>< ← < A t MJ 7

Movement	EBL	EBT	EBR	WBL	WBT	WBR	NBL	NBT	NBR	SBL	SBT	SBR
Lane Configurations	Vi	↑	f	vs	++	r	's'i	tttt	r	's'i	tttt	↱
Traffic Volume (veh/h)	423	75	356	139	169	32	356	838	312	102	647	239
Future Volume (veh/h)	423	75	356	139	169	32	356	838	312	102	647	239
Initial Q (Qb), veh	0	0	0	0	0	0	0	0	0	0	0	0
Ped-Bike Adj(A_pbT)	1.00		1.00	1.00		1.00	1.00		1.00	1.00		0.99
Parking Bus, Adj	1.00	1.00	1.00	1.00	1.00	1.00	1.00	1.00	1.00	1.00	1.00	1.00
Work Zone On Approach		No			No			No			No	
Adj Sat Flow, veh/h/ln	1900	1900	1900	1900	1900	1900	1900	1900	1900	1900	1900	1900
Adj Flow Rate, veh/h	441	78	371	145	176	33	371	873	325	106	674	249
Peak Hour Factor	0.96	0.96	0.96	0.96	0.96	0.96	0.96	0.96	0.96	0.96	0.96	0.96
Percent Heavy Veh, %	0	0	0	0	0	0	0	0	0	0	0	0
Cap, veh/h	944	465	394	412	335	149	424	2891	899	155	2390	1014
Arrive On Green	0.27	0.24	0.24	0.12	0.09	0.09	0.12	0.44	0.44	0.04	0.37	0.37
Sat Flow, veh/h	3510	1900	1610	3510	3610	1610	3510	6536	1606	3510	6536	1589
Grp Volume(v), veh/h	441	78	371	145	176	33	371	873	325	106	674	249
Grp Sat Flow(s),veh/h/ln	1755	1900	1610	1755	1805	1610	1755	1634	1606	1755	1634	1589
Q Serve(g_s), s	15.2	4.7	32.8	5.5	6.7	2.8	15.1	12.5	16.2	4.3	10.6	9.8
Cycle Q Clear(g_c), s	15.2	4.7	32.8	5.5	6.7	2.8	15.1	12.5	16.2	4.3	10.6	9.8
Prop In Lane	1.00		1.00	1.00		1.00	1.00		1.00	1.00		1.00
Lane Grp Cap(c), veh/h	944	465	394	412	335	149	424	2891	899	155	2390	1014
V/C Ratio(X)	0.47	0.17	0.94	0.35	0.53	0.22	0.88	0.30	0.36	0.68	0.28	0.25
Avail Cap(c_a), veh/h	944	563	477	412	523	233	605	2891	899	412	2390	1014
HCM Platoon Ratio	1.00	1.00	1.00	1.00	1.00	1.00	1.00	1.00	1.00	1.00	1.00	1.00
Upstream Filter(I)	1.00	1.00	1.00	1.00	1.00	1.00	0.94	0.94	0.94	0.97	0.97	0.97
Uniform Delay (d), s/veh	44.3	43.1	53.8	58.9	62.7	60.9	62.7	26.0	17.6	68.3	32.5	11.5
Incr Delay (d2), s/veh	1.7	0.1	23.2	2.4	0.5	0.3	7.1	0.3	1.1	1.9	0.3	0.6
Initial Q Delay(d3), s/veh	0.0	0.0	0.0	0.0	0.0	0.0	0.0	0.0	0.0	0.0	0.0	0.0
%ile BackOfQ(50%),veh/ln	6.9	2.2	15.6	2.6	3.1	1.1	7.0	4.8	6.1	1.9	4.1	3.5
Unsig. Movement Delay, s/veh												
LnGrp Delay(d), s/veh	46.0	43.2	77.0	61.3	63.2	61.2	69.8	26.3	18.7	70.2	32.8	12.0
LnGrp LOS	D	D	E	E	E	E	E	C	B	E	C	B
Approach Vol, veh/h		890			354			1569			1029	
Approach Delay, s/veh		58.7			62.2			35.0			31.6	
Approach LOS		E			E			D			C	

Timer - Assigned Phs	1	2	3	4	5	6	7	8
Phs Duration (G+Y+Rc), s	11.4	70.1	22.0	41.5	22.5	59.0	44.0	19.5
Change Period (Y+Rc), s	5.0	6.0	5.0	6.0	5.0	6.0	5.0	6.0
Max Green Setting (Gmax), s	17.0	46.0	17.0	43.0	25.0	38.0	39.0	21.0
Max Q Clear Time (g_c+I1), s	6.3	18.2	7.5	34.8	17.1	12.6	17.2	8.7
Green Ext Time (p_c), s	0.1	4.2	0.1	0.7	0.4	3.1	0.8	0.5

Intersection Summary	
HCM 6th Ctrl Delay, s/veh	42.1
HCM 6th LOS	D



Movement	EBL	EBR	NBL	NBT	SBT	SBR
Lane Configurations						
Traffic Volume (veh/h)	645	628	331	860	871	303
Future Volume (veh/h)	645	628	331	860	871	303
Initial Q (Qb), veh	0	0	0	0	0	0
Ped-Bike Adj(A_pbT)	1.00	1.00	1.00			1.00
Parking Bus, Adj	1.00	1.00	1.00	1.00	1.00	1.00
Work Zone On Approach	No			No	No	
Adj Sat Flow, veh/h/ln	1900	1900	1900	1900	1900	1900
Adj Flow Rate, veh/h	694	675	356	925	937	326
Peak Hour Factor	0.93	0.93	0.93	0.93	0.93	0.93
Percent Heavy Veh, %	0	0	0	0	0	0
Cap, veh/h	1372	824	424	3366	2359	1210
Arrive On Green	0.39	0.39	0.12	0.51	0.36	0.36
Sat Flow, veh/h	3510	1610	3510	6802	6802	1610
Grp Volume(v), veh/h	694	675	356	925	937	326
Grp Sat Flow(s),veh/h/ln	1755	1610	1755	1634	1634	1610
Q Serve(g_s), s	18.0	42.3	11.9	9.6	12.8	7.6
Cycle Q Clear(g_c), s	18.0	42.3	11.9	9.6	12.8	7.6
Prop In Lane	1.00	1.00	1.00			1.00
Lane Grp Cap(c), veh/h	1372	824	424	3366	2359	1210
V/C Ratio(X)	0.51	0.82	0.84	0.27	0.40	0.27
Avail Cap(c_a), veh/h	1372	824	1053	3366	2359	1210
HCM Platoon Ratio	1.00	1.00	1.00	1.00	1.00	1.00
Upstream Filter(I)	1.00	1.00	0.91	0.91	0.89	0.89
Uniform Delay (d), s/veh	27.8	24.6	51.6	16.4	28.6	4.6
Incr Delay (d2), s/veh	1.3	8.9	1.6	0.2	0.4	0.5
Initial Q Delay(d3), s/veh	0.0	0.0	0.0	0.0	0.0	0.0
%ile BackOfQ(50%),veh/ln	7.7	35.5	5.2	3.4	4.9	7.3
Unsig. Movement Delay, s/veh						
LnGrp Delay(d), s/veh	29.1	33.6	53.2	16.6	29.1	5.1
LnGrp LOS	C	C	D	B	C	A
Approach Vol, veh/h	1369			1281	1263	
Approach Delay, s/veh	31.3			26.8	22.9	
Approach LOS	C			C	C	

Timer - Assigned Phs	2		4	5	6
Phs Duration (G+Y+Rc), s	68.0		52.0	18.5	49.5
Change Period (Y+Rc), s	6.2		5.1	4.0	6.2
Max Green Setting (Gmax), s	61.8		46.9	36.0	21.8
Max Q Clear Time (g_c+I1), s	11.6		44.3	13.9	14.8
Green Ext Time (p_c), s	4.1		1.1	0.6	2.7

Intersection Summary	
HCM 6th Ctrl Delay, s/veh	27.1
HCM 6th LOS	C

> - ■>< ← < A t MJ 7

Movement	EBL	EBT	EBR	WBL	WBT	WBR	NBL	NBT	NBR	SBL	SBT	SBR
Lane Configurations	Vs	↟		3+	_r_	!i		tttfc		'i's	M+	?
Traffic Volume (veh/h)	261	16	154	85	18	240	163	660	124	181	982	336
Future Volume (veh/h)	261	16	154	85	18	240	163	660	124	181	982	336
Initial Q (Qb), veh	0	0	0	0	0	0	0	0	0	0	0	0
Ped-Bike Adj(A_pbT)	1.00		1.00	1.00		1.00	1.00		0.99	1.00		1.00
Parking Bus, Adj	1.00	1.00	1.00	1.00	1.00	1.00	1.00	1.00	1.00	1.00	1.00	1.00
Work Zone On Approach		No			No			No			No	
Adj Sat Flow, veh/h/ln	1900	1900	1900	1900	1900	1900	1900	1900	1900	1900	1900	1900
Adj Flow Rate, veh/h	272	17	160	89	19	250	170	688	129	189	1023	0
Peak Hour Factor	0.96	0.96	0.96	0.96	0.96	0.96	0.96	0.96	0.96	0.96	0.96	0.96
Percent Heavy Veh, %	0	0	0	0	0	0	0	0	0	0	0	0
Cap, veh/h	334	33	307	129	350	295	145	2649	481	233	2388	
Arrive On Green	0.10	0.21	0.21	0.07	0.18	0.18	0.08	0.47	0.47	0.07	0.46	0.00
Sat Flow, veh/h	3510	157	1477	1810	1900	1602	1810	5588	1016	3510	5187	1610
Grp Volume(v), veh/h	272	0	177	89	19	250	170	601	216	189	1023	0
Grp Sat Flow(s),veh/h/ln	1755	0	1634	1810	1900	1602	1810	1634	1702	1755	1729	1610
Q Serve(g_s), s	11.4	0.0	14.4	7.2	1.2	22.6	12.0	11.0	11.5	8.0	19.9	0.0
Cycle Q Clear(g_c), s	11.4	0.0	14.4	7.2	1.2	22.6	12.0	11.0	11.5	8.0	19.9	0.0
Prop In Lane	1.00		0.90	1.00		1.00	1.00		0.60	1.00		1.00
Lane Grp Cap(c), veh/h	334	0	340	129	350	295	145	2324	807	233	2388	
V/C Ratio(X)	0.81	0.00	0.52	0.69	0.05	0.85	1.17	0.26	0.27	0.81	0.43	
Avail Cap(c_a), veh/h	503	0	561	271	665	561	145	2324	807	234	2388	
HCM Platoon Ratio	1.00	1.00	1.00	1.00	1.00	1.00	1.00	1.00	1.00	1.00	1.00	1.00
Upstream Filter(I)	1.00	0.00	1.00	1.00	1.00	1.00	1.00	1.00	1.00	0.81	0.81	0.00
Uniform Delay (d), s/veh	66.6	0.0	52.8	68.0	50.4	59.1	69.0	23.6	23.8	69.1	27.2	0.0
Incr Delay (d2), s/veh	7.9	0.0	1.8	8.9	0.1	9.1	129.3	0.3	0.8	16.4	0.5	0.0
Initial Q Delay(d3), s/veh	0.0	0.0	0.0	0.0	0.0	0.0	0.0	0.0	0.0	0.0	0.0	0.0
%ile BackOfQ(50%),veh/ln	5.5	0.0	6.2	3.7	0.6	10.0	10.6	4.2	4.7	4.0	8.0	0.0
Unsig. Movement Delay, s/veh												
LnGrp Delay(d), s/veh	74.4	0.0	54.5	76.9	50.5	68.2	198.3	23.9	24.6	85.5	27.7	0.0
LnGrp LOS	E		D	E	D	E	F	C	C	F	C	
Approach Vol, veh/h		449			358			987			1212	
Approach Delay, s/veh		66.6			69.4			54.1			36.7	
Approach LOS		E			E			D			D	

Timer - Assigned Phs	1	2	3	4	5	6	7	8
Phs Duration (G+Y+Rc), s	17.0	78.1	17.2	37.7	19.0	76.1	20.8	34.2
Change Period (Y+Rc), s	7.0	7.0	6.5	6.5	7.0	7.0	6.5	6.5
Max Green Setting (Gmax), s	10.0	39.0	22.5	51.5	12.0	37.0	21.5	52.5
Max Q Clear Time (g_c+I1), s	10.0	13.5	9.2	16.4	14.0	21.9	13.4	24.6
Green Ext Time (p_c), s	0.0	8.4	0.2	1.7	0.0	8.2	0.9	1.6

Intersection Summary	
HCM 6th Ctrl Delay, s/veh	50.8
HCM 6th LOS	D

Notes

Unsignalized Delay for [SBR] is excluded from calculations of the approach delay and intersection delay.

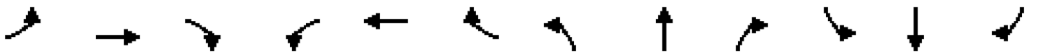

Movement	EBL	EBT	EBR	WBL	WBT	WBR	NBL	NBT	NBR	SBL	SBT	SBR
Lane Configurations												
Traffic Volume (veh/h)	131	2	272	26	4	30	114	1687	8	15	995	10
Future Volume (veh/h)	131	2	272	26	4	30	114	1687	8	15	995	10
Initial Q (Qb), veh	0	0	0	0	0	0	0	0	0	0	0	0
Ped-Bike Adj(A_pbT)	1.00		1.00	1.00		1.00	1.00		0.98	1.00		1.00
Parking Bus, Adj	1.00	1.00	1.00	1.00	1.00	1.00	1.00	1.00	1.00	1.00	1.00	1.00
Work Zone On Approach		No			No			No			No	
Adj Sat Flow, veh/h/ln	1900	1900	1900	1900	1900	1900	1900	1900	1900	1900	1900	1900
Adj Flow Rate, veh/h	139	2	289	28	4	32	121	1795	9	16	1059	11
Peak Hour Factor	0.94	0.94	0.94	0.94	0.94	0.94	0.94	0.94	0.94	0.94	0.94	0.94
Percent Heavy Veh, %	0	0	0	0	0	0	0	0	0	0	0	0
Cap, veh/h	351	2	352	122	40	321	152	3237	16	32	2866	30
Arrive On Green	0.22	0.22	0.22	0.22	0.22	0.22	0.08	0.61	0.61	0.02	0.54	0.54
Sat Flow, veh/h	1394	11	1601	1105	182	1456	1810	5326	27	1810	5293	55
Grp Volume(v), veh/h	139	0	291	28	0	36	121	1165	639	16	692	378
Grp Sat Flow(s),veh/h/ln	1394	0	1612	1105	0	1638	1810	1729	1894	1810	1729	1890
Q Serve(g_s), s	9.3	0.0	18.0	2.6	0.0	1.8	6.9	20.9	20.9	0.9	12.0	12.0
Cycle Q Clear(g_c), s	11.1	0.0	18.0	20.6	0.0	1.8	6.9	20.9	20.9	0.9	12.0	12.0
Prop In Lane	1.00		0.99	1.00		0.89	1.00		0.01	1.00		0.03
Lane Grp Cap(c), veh/h	351	0	355	122	0	361	152	2102	1151	32	1872	1023
V/C Ratio(X)	0.40	0.00	0.82	0.23	0.00	0.10	0.80	0.55	0.55	0.50	0.37	0.37
Avail Cap(c_a), veh/h	453	0	473	203	0	480	224	2102	1151	224	1872	1023
HCM Platoon Ratio	1.00	1.00	1.00	1.00	1.00	1.00	1.00	1.00	1.00	1.00	1.00	1.00
Upstream Filter(I)	1.00	0.00	1.00	1.00	0.00	1.00	0.62	0.62	0.62	1.00	1.00	1.00
Uniform Delay (d), s/veh	37.1	0.0	39.0	48.8	0.0	32.6	47.2	12.2	12.2	51.1	13.8	13.8
Incr Delay (d2), s/veh	1.5	0.0	11.8	2.0	0.0	0.3	12.7	0.7	1.2	23.3	0.6	1.0
Initial Q Delay(d3), s/veh	0.0	0.0	0.0	0.0	0.0	0.0	0.0	0.0	0.0	0.0	0.0	0.0
%ile BackOfQ(50%),veh/ln	3.3	0.0	8.3	0.8	0.0	0.8	3.5	6.9	7.7	0.6	4.3	4.8
Unsig. Movement Delay, s/veh												
LnGrp Delay(d), s/veh	38.6	0.0	50.8	50.8	0.0	32.9	59.9	12.8	13.4	74.4	14.4	14.8
LnGrp LOS	D		D	D		C	E	B	B	E	B	B
Approach Vol, veh/h		430			64			1925			1086	
Approach Delay, s/veh		46.9			40.7			16.0			15.4	
Approach LOS		D			D			B			B	

Timer - Assigned Phs	1	2		4	5	6		8				
Phs Duration (G+Y+Rc), s	5.9	69.8		29.3	12.8	62.9		29.3				
Change Period (Y+Rc), s	4.0	6.0		6.2	4.0	6.0		6.2				
Max Green Setting (Gmax), s	13.0	45.0		30.8	13.0	45.0		30.8				
Max Q Clear Time (g_c+I1), s	2.9	22.9		20.0	8.9	14.0		22.6				
Green Ext Time (p_c), s	0.0	18.2		3.1	0.2	14.0		0.2				

Intersection Summary												
HCM 6th Ctrl Delay, s/veh			20.0									
HCM 6th LOS			C									

> - ■>< ← < A t / VI 7

Movement	EBL	EBT	EBR	WBL	WBT	WBR	NBL	NBT	NBR	SBL	SBT	SBR
Lane Configurations	*i*i	ttt	i*	↰↰	++	f	*i*i	ttt	i*	*i*i	+++	↱
Traffic Volume (veh/h)	365	515	168	85	278	171	168	1337	106	158	976	128
Future Volume (veh/h)	365	515	168	85	278	171	168	1337	106	158	976	128
Initial Q (Qb), veh	0	0	0	0	0	0	0	0	0	0	0	0
Ped-Bike Adj(A_pbT)	1.00		1.00	1.00		1.00	1.00		1.00	1.00		1.00
Parking Bus, Adj	1.00	1.00	1.00	1.00	1.00	1.00	1.00	1.00	1.00	1.00	1.00	1.00
Work Zone On Approach		No			No			No			No	
Adj Sat Flow, veh/h/ln	1900	1900	1900	1900	1900	1900	1900	1900	1900	1900	1900	1900
Adj Flow Rate, veh/h	397	560	183	92	302	186	183	1453	115	172	1061	139
Peak Hour Factor	0.92	0.92	0.92	0.92	0.92	0.92	0.92	0.92	0.92	0.92	0.92	0.92
Percent Heavy Veh, %	0	0	0	0	0	0	0	0	0	0	0	0
Cap, veh/h	319	1035	321	150	546	244	248	2563	795	236	2546	787
Arrive On Green	0.09	0.20	0.20	0.04	0.15	0.15	0.07	0.49	0.49	0.07	0.49	0.49
Sat Flow, veh/h	3510	5187	1608	3510	3610	1610	3510	5187	1609	3510	5187	1603
Grp Volume(v), veh/h	397	560	183	92	302	186	183	1453	115	172	1061	139
Grp Sat Flow(s),veh/h/ln	1755	1729	1608	1755	1805	1610	1755	1729	1609	1755	1729	1603
Q Serve(g_s), s	10.0	10.7	11.3	2.8	8.5	12.2	5.6	21.7	4.3	5.3	14.4	5.3
Cycle Q Clear(g_c), s	10.0	10.7	11.3	2.8	8.5	12.2	5.6	21.7	4.3	5.3	14.4	5.3
Prop In Lane	1.00		1.00	1.00		1.00	1.00		1.00	1.00		1.00
Lane Grp Cap(c), veh/h	319	1035	321	150	546	244	248	2563	795	236	2546	787
V/C Ratio(X)	1.24	0.54	0.57	0.61	0.55	0.76	0.74	0.57	0.14	0.73	0.42	0.18
Avail Cap(c_a), veh/h	319	1575	488	351	1129	504	351	2563	795	351	2546	787
HCM Platoon Ratio	1.00	1.00	1.00	1.00	1.00	1.00	1.00	1.00	1.00	1.00	1.00	1.00
Upstream Filter(I)	1.00	1.00	1.00	1.00	1.00	1.00	1.00	1.00	1.00	0.93	0.93	0.93
Uniform Delay (d), s/veh	50.0	39.5	39.8	51.8	43.2	44.8	50.1	19.6	15.2	50.3	17.9	15.6
Incr Delay (d2), s/veh	133.5	0.4	1.6	4.0	0.9	4.9	4.9	0.9	0.4	4.0	0.5	0.5
Initial Q Delay(d3), s/veh	0.0	0.0	0.0	0.0	0.0	0.0	0.0	0.0	0.0	0.0	0.0	0.0
%ile BackOfQ(50%),veh/ln	10.2	4.4	4.5	1.3	3.8	5.0	2.5	8.1	1.6	2.4	5.3	1.9
Unsig. Movement Delay, s/veh												
LnGrp Delay(d), s/veh	183.5	39.9	41.4	55.8	44.1	49.7	55.1	20.5	15.5	54.3	18.4	16.1
LnGrp LOS	F	D	D	E	D	D	E	C	B	D	B	B
Approach Vol, veh/h		1140			580			1751			1372	
Approach Delay, s/veh		90.2			47.8			23.8			22.7	
Approach LOS		F			D			C			C	

Timer - Assigned Phs	1	2	3	4	5	6	7	8
Phs Duration (G+Y+Rc), s	11.4	61.3	8.7	28.5	11.8	61.0	14.0	23.2
Change Period (Y+Rc), s	4.0	7.0	4.0	* 6.6	4.0	7.0	4.0	* 6.6
Max Green Setting (Gmax), s	7.0	33.0	11.0	* 33	11.0	33.0	10.0	* 34
Max Q Clear Time (g_c+I1), s	7.3	23.7	4.8	13.3	7.6	16.4	12.0	14.2
Green Ext Time (p_c), s	0.2	6.0	0.1	4.0	0.2	6.6	0.0	2.2

Intersection Summary	
HCM 6th Ctrl Delay, s/veh	41.9
HCM 6th LOS	D

Notes

* HCM 6th computational engine requires equal clearance times for the phases crossing the barrier.

> - ■>< ← < A t MJ 7

Movement	EBL	EBT	EBR	WBL	WBT	WBR	NBL	NBT	NBR	SBL	SBT	SBR
Lane Configurations	'i's	+++	r	'i's	+++	f	Vi	tttt	f	Vi	ttti*	
Traffic Volume (veh/h)	299	949	304	329	592	202	239	1139	346	331	1032	87
Future Volume (veh/h)	299	949	304	329	592	202	239	1139	346	331	1032	87
Initial Q (Qb), veh	0	0	0	0	0	0	0	0	0	0	0	0
Ped-Bike Adj(A_pbT)	1.00		0.98	1.00		0.99	1.00		0.98	1.00		1.00
Parking Bus, Adj	1.00	1.00	1.00	1.00	1.00	1.00	1.00	1.00	1.00	1.00	1.00	1.00
Work Zone On Approach		No			No			No			No	
Adj Sat Flow, veh/h/ln	1900	1900	1900	1900	1900	1900	1900	1900	1900	1900	1900	1900
Adj Flow Rate, veh/h	322	1020	327	354	637	217	257	1225	372	356	1110	94
Peak Hour Factor	0.93	0.93	0.93	0.93	0.93	0.93	0.93	0.93	0.93	0.93	0.93	0.93
Percent Heavy Veh, %	0	0	0	0	0	0	0	0	0	0	0	0
Cap, veh/h	365	1588	485	394	1631	503	301	1915	464	397	1981	167
Arrive On Green	0.10	0.31	0.31	0.11	0.31	0.31	0.09	0.29	0.29	0.11	0.32	0.32
Sat Flow, veh/h	3510	5187	1585	3510	5187	1601	3510	6536	1583	3510	6187	521
Grp Volume(v), veh/h	322	1020	327	354	637	217	257	1225	372	356	878	326
Grp Sat Flow(s),veh/h/ln	1755	1729	1585	1755	1729	1601	1755	1634	1583	1755	1634	1806
Q Serve(g_s), s	14.9	28.0	29.8	16.4	15.8	17.7	11.9	26.9	35.8	16.5	24.5	24.7
Cycle Q Clear(g_c), s	14.9	28.0	29.8	16.4	15.8	17.7	11.9	26.9	35.8	16.5	24.5	24.7
Prop In Lane	1.00		1.00	1.00		1.00	1.00		1.00	1.00		0.29
Lane Grp Cap(c), veh/h	365	1588	485	394	1631	503	301	1915	464	397	1570	578
V/C Ratio(X)	0.88	0.64	0.67	0.90	0.39	0.43	0.85	0.64	0.80	0.90	0.56	0.56
Avail Cap(c_a), veh/h	436	1588	485	415	1631	503	426	1915	464	426	1570	578
HCM Platoon Ratio	1.00	1.00	1.00	1.00	1.00	1.00	1.00	1.00	1.00	1.00	1.00	1.00
Upstream Filter(I)	1.00	1.00	1.00	1.00	1.00	1.00	0.86	0.86	0.86	1.00	1.00	1.00
Uniform Delay (d), s/veh	72.9	49.5	50.1	72.3	44.2	44.9	74.4	50.8	53.9	72.2	46.4	46.5
Incr Delay (d2), s/veh	15.0	2.0	7.3	20.4	0.7	2.7	7.3	1.4	11.9	19.6	1.4	3.9
Initial Q Delay(d3), s/veh	0.0	0.0	0.0	0.0	0.0	0.0	0.0	0.0	0.0	0.0	0.0	0.0
%ile BackOfQ(50%),veh/ln	7.3	12.1	12.4	8.3	6.7	7.3	5.6	11.0	15.3	8.4	10.0	11.5
Unsig. Movement Delay, s/veh												
LnGrp Delay(d), s/veh	87.9	51.5	57.4	92.7	44.9	47.5	81.7	52.2	65.8	91.8	47.9	50.5
LnGrp LOS	F	D	E	F	D	D	F	D	E	F	D	D
Approach Vol, veh/h		1669			1208			1854			1560	
Approach Delay, s/veh		59.7			59.4			59.0			58.4	
Approach LOS		E			E			E			E	

Timer - Assigned Phs	1	2	3	4	5	6	7	8
Phs Duration (G+Y+Rc), s	25.6	55.3	26.0	58.0	21.2	59.8	24.6	59.4
Change Period (Y+Rc), s	7.0	7.0	7.5	7.5	7.0	7.0	7.5	7.5
Max Green Setting (Gmax), s	20.6	46.0	19.5	50.5	20.0	46.0	20.5	49.5
Max Q Clear Time (g_c+I1), s	18.5	37.8	18.4	31.8	13.9	26.7	16.9	19.7
Green Ext Time (p_c), s	0.1	5.7	0.1	7.2	0.2	8.4	0.2	4.7

Intersection Summary	
HCM 6th Ctrl Delay, s/veh	59.1
HCM 6th LOS	E



Movement	EBL	EBT	EBR	WBL	WBT	WBR	NBL	NBT	NBR	SBL	SBT	SBR
Lane Configurations	fl	++	r	fl	++	r	'i'i	tttt	r	'i'i	tttt	r
Traffic Volume (veh/h)	330	102	147	108	72	95	152	1305	103	158	1085	128
Future Volume (veh/h)	330	102	147	108	72	95	152	1305	103	158	1085	128
Initial Q (Qb), veh	0	0	0	0	0	0	0	0	0	0	0	0
Ped-Bike Adj(A_pbT)	1.00		1.00	1.00		1.00	1.00		1.00	1.00		1.00
Parking Bus, Adj	1.00	1.00	1.00	1.00	1.00	1.00	1.00	1.00	1.00	1.00	1.00	1.00
Work Zone On Approach		No			No			No			No	
Adj Sat Flow, veh/h/ln	1900	1900	1900	1900	1900	1900	1900	1900	1900	1900	1900	1900
Adj Flow Rate, veh/h	363	112	0	119	79	0	167	1434	0	174	1192	0
Peak Hour Factor	0.91	0.91	0.91	0.91	0.91	0.91	0.91	0.91	0.91	0.91	0.91	0.91
Percent Heavy Veh, %	0	0	0	0	0	0	0	0	0	0	0	0
Cap, veh/h	351	466		216	327		221	3648		228	3661	
Arrive On Green	0.10	0.13	0.00	0.06	0.09	0.00	0.06	0.56	0.00	0.07	0.56	0.00
Sat Flow, veh/h	3510	3610	1610	3510	3610	1610	3510	6536	1610	3510	6536	1610
Grp Volume(v), veh/h	363	112	0	119	79	0	167	1434	0	174	1192	0
Grp Sat Flow(s),veh/h/ln	1755	1805	1610	1755	1805	1610	1755	1634	1610	1755	1634	1610
Q Serve(g_s), s	14.5	4.0	0.0	4.8	2.9	0.0	6.8	18.0	0.0	7.1	14.2	0.0
Cycle Q Clear(g_c), s	14.5	4.0	0.0	4.8	2.9	0.0	6.8	18.0	0.0	7.1	14.2	0.0
Prop In Lane	1.00		1.00	1.00		1.00	1.00		1.00	1.00		1.00
Lane Grp Cap(c), veh/h	351	466		216	327		221	3648		228	3661	
V/C Ratio(X)	1.03	0.24		0.55	0.24		0.76	0.39		0.76	0.33	
Avail Cap(c_a), veh/h	351	1033		496	1183		484	3648		484	3661	
HCM Platoon Ratio	1.00	1.00	1.00	1.00	1.00	1.00	1.00	1.00	1.00	1.00	1.00	1.00
Upstream Filter(I)	1.00	1.00	0.00	1.00	1.00	0.00	0.90	0.90	0.00	0.72	0.72	0.00
Uniform Delay (d), s/veh	65.3	56.7	0.0	66.1	61.3	0.0	66.8	18.1	0.0	66.7	17.2	0.0
Incr Delay (d2), s/veh	57.1	0.3	0.0	2.2	0.5	0.0	4.7	0.3	0.0	3.8	0.2	0.0
Initial Q Delay(d3), s/veh	0.0	0.0	0.0	0.0	0.0	0.0	0.0	0.0	0.0	0.0	0.0	0.0
%ile BackOfQ(50%),veh/ln	9.3	1.9	0.0	2.2	1.4	0.0	3.1	6.5	0.0	3.2	5.1	0.0
Unsig. Movement Delay, s/veh												
LnGrp Delay(d), s/veh	122.4	57.1	0.0	68.3	61.7	0.0	71.5	18.4	0.0	70.5	17.3	0.0
LnGrp LOS	F	E		E	E		E	B		E	B	
Approach Vol, veh/h		475			198			1601			1366	
Approach Delay, s/veh		107.0			65.7			24.0			24.1	
Approach LOS		F			E			C			C	

Timer - Assigned Phs	1	2	3	4	5	6	7	8
Phs Duration (G+Y+Rc), s	16.4	87.9	15.4	25.2	16.1	88.2	21.0	19.7
Change Period (Y+Rc), s	7.0	7.0	6.5	6.5	7.0	7.0	6.5	6.5
Max Green Setting (Gmax), s	20.0	36.0	20.5	41.5	20.0	36.0	14.5	47.5
Max Q Clear Time (g_c+I1), s	9.1	20.0	6.8	6.0	8.8	16.2	16.5	4.9
Green Ext Time (p_c), s	0.4	9.4	0.3	0.9	0.3	8.8	0.0	0.6

Intersection Summary	
HCM 6th Ctrl Delay, s/veh	37.1
HCM 6th LOS	D

Notes

Unsignalized Delay for [NBR, EBR, WBR, SBR] is excluded from calculations of the approach delay and intersection delay.



Movement	EBL	EBT	EBR	WBL	WBT	WBR	NBL	NBT	NBR	SBL	SBT	SBR
Lane Configurations	fl	++	r	fl	++	r	'i'i	tttt	r	'i'i	tttt	r
Traffic Volume (veh/h)	230	217	298	176	80	80	264	1332	250	91	1390	81
Future Volume (veh/h)	230	217	298	176	80	80	264	1332	250	91	1390	81
Initial Q (Qb), veh	0	0	0	0	0	0	0	0	0	0	0	0
Ped-Bike Adj(A_pbT)	1.00		1.00	1.00		1.00	1.00		1.00	1.00		1.00
Parking Bus, Adj	1.00	1.00	1.00	1.00	1.00	1.00	1.00	1.00	1.00	1.00	1.00	1.00
Work Zone On Approach		No			No			No			No	
Adj Sat Flow, veh/h/ln	1900	1900	1900	1900	1900	1900	1900	1900	1900	1900	1900	1900
Adj Flow Rate, veh/h	245	231	0	187	85	0	281	1417	0	97	1479	0
Peak Hour Factor	0.94	0.94	0.94	0.94	0.94	0.94	0.94	0.94	0.94	0.94	0.94	0.94
Percent Heavy Veh, %	0	0	0	0	0	0	0	0	0	0	0	0
Cap, veh/h	294	428		260	393		329	3545		203	3309	
Arrive On Green	0.08	0.12	0.00	0.07	0.11	0.00	0.09	0.54	0.00	0.06	0.51	0.00
Sat Flow, veh/h	3510	3610	1610	3510	3610	1610	3510	6536	1610	3510	6536	1610
Grp Volume(v), veh/h	245	231	0	187	85	0	281	1417	0	97	1479	0
Grp Sat Flow(s),veh/h/ln	1755	1805	1610	1755	1805	1610	1755	1634	1610	1755	1634	1610
Q Serve(g_s), s	9.3	8.1	0.0	7.0	2.9	0.0	10.6	17.1	0.0	3.6	19.5	0.0
Cycle Q Clear(g_c), s	9.3	8.1	0.0	7.0	2.9	0.0	10.6	17.1	0.0	3.6	19.5	0.0
Prop In Lane	1.00		1.00	1.00		1.00	1.00		1.00	1.00		1.00
Lane Grp Cap(c), veh/h	294	428		260	393		329	3545		203	3309	
V/C Ratio(X)	0.83	0.54		0.72	0.22		0.85	0.40		0.48	0.45	
Avail Cap(c_a), veh/h	312	1257		286	1230		338	3545		260	3309	
HCM Platoon Ratio	1.00	1.00	1.00	1.00	1.00	1.00	1.00	1.00	1.00	1.00	1.00	1.00
Upstream Filter(I)	1.00	1.00	0.00	1.00	1.00	0.00	0.84	0.84	0.00	0.96	0.96	0.00
Uniform Delay (d), s/veh	60.9	56.0	0.0	61.1	54.9	0.0	60.3	18.1	0.0	61.6	21.3	0.0
Incr Delay (d2), s/veh	15.3	0.8	0.0	6.2	0.2	0.0	15.0	0.3	0.0	0.6	0.4	0.0
Initial Q Delay(d3), s/veh	0.0	0.0	0.0	0.0	0.0	0.0	0.0	0.0	0.0	0.0	0.0	0.0
%ile BackOfQ(50%),veh/ln	4.7	3.7	0.0	3.4	1.3	0.0	5.3	6.1	0.0	1.6	7.1	0.0
Unsig. Movement Delay, s/veh												
LnGrp Delay(d), s/veh	76.2	56.8	0.0	67.3	55.1	0.0	75.2	18.3	0.0	62.3	21.7	0.0
LnGrp LOS	E	E		E	E		E	B		E	C	
Approach Vol, veh/h		476			272			1698			1576	
Approach Delay, s/veh		66.8			63.5			27.8			24.2	
Approach LOS		E			E			C			C	

Timer - Assigned Phs	1	2	3	4	5	6	7	8
Phs Duration (G+Y+Rc), s	14.8	80.2	17.0	23.0	19.7	75.3	18.3	21.7
Change Period (Y+Rc), s	7.0	7.0	7.0	7.0	7.0	7.0	7.0	7.0
Max Green Setting (Gmax), s	10.0	39.0	11.0	47.0	13.0	36.0	12.0	46.0
Max Q Clear Time (g_c+I1), s	5.6	19.1	9.0	10.1	12.6	21.5	11.3	4.9
Green Ext Time (p_c), s	0.0	9.3	0.1	1.1	0.0	8.1	0.0	0.5

Intersection Summary	
HCM 6th Ctrl Delay, s/veh	33.4
HCM 6th LOS	C

Notes

Unsignalized Delay for [NBR, EBR, WBR, SBR] is excluded from calculations of the approach delay and intersection delay.

> - ■>< ← < A t MJ 7

Movement	EBL	EBT	EBR	WBL	WBT	WBR	NBL	NBT	NBR	SBL	SBT	SBR
Lane Configurations	Vi	↑	f	vs	++	r	's'i	tttt	r	's'i	tttt	↱
Traffic Volume (veh/h)	712	179	390	217	211	37	239	919	375	248	986	533
Future Volume (veh/h)	712	179	390	217	211	37	239	919	375	248	986	533
Initial Q (Qb), veh	0	0	0	0	0	0	0	0	0	0	0	0
Ped-Bike Adj(A_pbT)	1.00		1.00	1.00		1.00	1.00		0.99	1.00		1.00
Parking Bus, Adj	1.00	1.00	1.00	1.00	1.00	1.00	1.00	1.00	1.00	1.00	1.00	1.00
Work Zone On Approach		No			No			No			No	
Adj Sat Flow, veh/h/ln	1900	1900	1900	1900	1900	1900	1900	1900	1900	1900	1900	1900
Adj Flow Rate, veh/h	734	185	402	224	218	38	246	947	387	256	1016	549
Peak Hour Factor	0.97	0.97	0.97	0.97	0.97	0.97	0.97	0.97	0.97	0.97	0.97	0.97
Percent Heavy Veh, %	0	0	0	0	0	0	0	0	0	0	0	0
Cap, veh/h	847	502	425	315	406	181	299	2662	796	306	2676	1048
Arrive On Green	0.24	0.26	0.26	0.09	0.11	0.11	0.09	0.41	0.41	0.09	0.41	0.41
Sat Flow, veh/h	3510	1900	1610	3510	3610	1610	3510	6536	1601	3510	6536	1610
Grp Volume(v), veh/h	734	185	402	224	218	38	246	947	387	256	1016	549
Grp Sat Flow(s),veh/h/ln	1755	1900	1610	1755	1805	1610	1755	1634	1601	1755	1634	1610
Q Serve(g_s), s	29.1	11.5	35.5	9.0	8.3	3.1	10.0	14.6	23.3	10.4	15.8	26.2
Cycle Q Clear(g_c), s	29.1	11.5	35.5	9.0	8.3	3.1	10.0	14.6	23.3	10.4	15.8	26.2
Prop In Lane	1.00		1.00	1.00		1.00	1.00		1.00	1.00		1.00
Lane Grp Cap(c), veh/h	847	502	425	315	406	181	299	2662	796	306	2676	1048
V/C Ratio(X)	0.87	0.37	0.95	0.71	0.54	0.21	0.82	0.36	0.49	0.84	0.38	0.52
Avail Cap(c_a), veh/h	847	563	477	315	523	233	629	2662	796	436	2676	1048
HCM Platoon Ratio	1.00	1.00	1.00	1.00	1.00	1.00	1.00	1.00	1.00	1.00	1.00	1.00
Upstream Filter(I)	1.00	1.00	1.00	1.00	1.00	1.00	0.94	0.94	0.94	0.90	0.90	0.90
Uniform Delay (d), s/veh	52.8	43.5	52.3	64.2	60.8	58.5	65.3	29.8	24.2	65.2	29.9	13.4
Incr Delay (d2), s/veh	11.5	0.2	25.4	12.8	0.4	0.2	2.1	0.4	2.0	6.1	0.4	1.7
Initial Q Delay(d3), s/veh	0.0	0.0	0.0	0.0	0.0	0.0	0.0	0.0	0.0	0.0	0.0	0.0
%ile BackOfQ(50%),veh/ln	14.1	5.5	17.1	4.5	3.8	1.3	4.5	5.6	9.1	4.8	6.1	9.4
Unsig. Movement Delay, s/veh												
LnGrp Delay(d), s/veh	64.3	43.7	77.8	77.0	61.2	58.7	67.3	30.1	26.2	71.2	30.3	15.1
LnGrp LOS	E	D	E	E	E	E	E	C	C	E	C	B
Approach Vol, veh/h		1321			480			1580			1821	
Approach Delay, s/veh		65.5			68.4			35.0			31.5	
Approach LOS		E			E			C			C	

Timer - Assigned Phs	1	2	3	4	5	6	7	8
Phs Duration (G+Y+Rc), s	17.6	65.1	18.0	44.3	17.3	65.4	40.0	22.3
Change Period (Y+Rc), s	5.0	6.0	5.0	6.0	5.0	6.0	5.0	6.0
Max Green Setting (Gmax), s	18.6	49.0	13.0	43.0	26.0	41.0	35.0	21.0
Max Q Clear Time (g_c+I1), s	12.4	25.3	11.0	37.5	12.0	28.2	31.1	10.3
Green Ext Time (p_c), s	0.2	4.7	0.1	0.8	0.3	4.5	0.7	0.6

Intersection Summary	
HCM 6th Ctrl Delay, s/veh	44.6
HCM 6th LOS	D

Notes

User approved pedestrian interval to be less than phase max green.



Movement	EBL	EBR	NBL	NBT	SBT	SBR
Lane Configurations						
Traffic Volume (veh/h)	313	309	487	1220	1019	768
Future Volume (veh/h)	313	309	487	1220	1019	768
Initial Q (Qb), veh	0	0	0	0	0	0
Ped-Bike Adj(A_pbT)	1.00	1.00	1.00			1.00
Parking Bus, Adj	1.00	1.00	1.00	1.00	1.00	1.00
Work Zone On Approach	No			No	No	
Adj Sat Flow, veh/h/ln	1900	1900	1900	1900	1900	1900
Adj Flow Rate, veh/h	333	329	518	1298	1084	817
Peak Hour Factor	0.94	0.94	0.94	0.94	0.94	0.94
Percent Heavy Veh, %	0	0	0	0	0	0
Cap, veh/h	1255	846	589	3584	2269	1135
Arrive On Green	0.36	0.36	0.17	0.55	0.35	0.35
Sat Flow, veh/h	3510	1610	3510	6802	6802	1610
Grp Volume(v), veh/h	333	329	518	1298	1084	817
Grp Sat Flow(s),veh/h/ln	1755	1610	1755	1634	1634	1610
Q Serve(g_s), s	8.1	14.6	17.3	13.4	15.6	36.5
Cycle Q Clear(g_c), s	8.1	14.6	17.3	13.4	15.6	36.5
Prop In Lane	1.00	1.00	1.00			1.00
Lane Grp Cap(c), veh/h	1255	846	589	3584	2269	1135
V/C Ratio(X)	0.27	0.39	0.88	0.36	0.48	0.72
Avail Cap(c_a), veh/h	1255	846	1053	3584	2269	1135
HCM Platoon Ratio	1.00	1.00	1.00	1.00	1.00	1.00
Upstream Filter(I)	1.00	1.00	0.84	0.84	0.85	0.85
Uniform Delay (d), s/veh	27.4	17.0	48.7	15.3	30.7	10.6
Incr Delay (d2), s/veh	0.5	1.3	1.5	0.2	0.6	3.4
Initial Q Delay(d3), s/veh	0.0	0.0	0.0	0.0	0.0	0.0
%ile BackOfQ(50%),veh/ln	8.5	16.5	7.4	4.6	5.9	25.2
Unsig. Movement Delay, s/veh						
LnGrp Delay(d), s/veh	27.9	18.3	50.2	15.5	31.3	14.0
LnGrp LOS	C	B	D	B	C	B
Approach Vol, veh/h	662			1816	1901	
Approach Delay, s/veh	23.1			25.4	23.9	
Approach LOS	C			C	C	

Timer - Assigned Phs		2		4	5	6
Phs Duration (G+Y+Rc), s		72.0		48.0	24.1	47.9
Change Period (Y+Rc), s		6.2		5.1	4.0	6.2
Max Green Setting (Gmax), s		65.8		42.9	36.0	25.8
Max Q Clear Time (g_c+I1), s		15.4		16.6	19.3	38.5
Green Ext Time (p_c), s		6.4		1.2	0.9	0.0

Intersection Summary		
HCM 6th Ctrl Delay, s/veh		24.4
HCM 6th LOS		C

> - ■>< ← < A t MJ 7

Movement	EBL	EBT	EBR	WBL	WBT	WBR	NBL	NBT	NBR	SBL	SBT	SBR
Lane Configurations	Vs	↟		3+	_r_	!i		tttfc		'i's	M+	?
Traffic Volume (veh/h)	273	23	154	85	21	182	121	1252	123	224	785	318
Future Volume (veh/h)	273	23	154	85	21	182	121	1252	123	224	785	318
Initial Q (Qb), veh	0	0	0	0	0	0	0	0	0	0	0	0
Ped-Bike Adj(A_pbT)	1.00		1.00	1.00		0.98	1.00		1.00	1.00		1.00
Parking Bus, Adj	1.00	1.00	1.00	1.00	1.00	1.00	1.00	1.00	1.00	1.00	1.00	1.00
Work Zone On Approach		No			No			No			No	
Adj Sat Flow, veh/h/ln	1900	1900	1900	1900	1900	1900	1900	1900	1900	1900	1900	1900
Adj Flow Rate, veh/h	294	25	166	91	23	196	130	1346	132	241	844	0
Peak Hour Factor	0.93	0.93	0.93	0.93	0.93	0.93	0.93	0.93	0.93	0.93	0.93	0.93
Percent Heavy Veh, %	0	0	0	0	0	0	0	0	0	0	0	0
Cap, veh/h	347	45	299	130	346	287	152	2881	282	234	2361	
Arrive On Green	0.10	0.21	0.21	0.07	0.18	0.18	0.08	0.47	0.47	0.07	0.46	0.00
Sat Flow, veh/h	3510	215	1428	1810	1900	1578	1810	6097	596	3510	5187	1610
Grp Volume(v), veh/h	294	0	191	91	23	196	130	1081	397	241	844	0
Grp Sat Flow(s),veh/h/ln	1755	0	1643	1810	1900	1578	1810	1634	1792	1755	1729	1610
Q Serve(g_s), s	12.4	0.0	15.6	7.4	1.5	17.4	10.6	22.4	22.5	10.0	15.9	0.0
Cycle Q Clear(g_c), s	12.4	0.0	15.6	7.4	1.5	17.4	10.6	22.4	22.5	10.0	15.9	0.0
Prop In Lane	1.00		0.87	1.00		1.00	1.00		0.33	1.00		1.00
Lane Grp Cap(c), veh/h	347	0	344	130	346	287	152	2316	847	234	2361	
V/C Ratio(X)	0.85	0.00	0.56	0.70	0.07	0.68	0.86	0.47	0.47	1.03	0.36	
Avail Cap(c_a), veh/h	410	0	553	235	665	552	157	2316	847	234	2361	
HCM Platoon Ratio	1.00	1.00	1.00	1.00	1.00	1.00	1.00	1.00	1.00	1.00	1.00	1.00
Upstream Filter(I)	1.00	0.00	1.00	1.00	1.00	1.00	1.00	1.00	1.00	0.85	0.85	0.00
Uniform Delay (d), s/veh	66.5	0.0	53.1	68.1	50.8	57.3	67.8	26.8	26.8	70.0	26.6	0.0
Incr Delay (d2), s/veh	14.5	0.0	2.0	9.4	0.1	4.0	34.9	0.7	1.9	62.1	0.4	0.0
Initial Q Delay(d3), s/veh	0.0	0.0	0.0	0.0	0.0	0.0	0.0	0.0	0.0	0.0	0.0	0.0
%ile BackOfQ(50%),veh/ln	6.3	0.0	6.7	3.8	0.7	7.3	6.3	8.6	9.7	6.4	6.4	0.0
Unsig. Movement Delay, s/veh												
LnGrp Delay(d), s/veh	81.0	0.0	55.1	77.4	50.9	61.3	102.7	27.5	28.7	132.1	26.9	0.0
LnGrp LOS	F		E	E	D	E	F	C	C	F	C	
Approach Vol, veh/h		485			310			1608			1085	
Approach Delay, s/veh		70.8			65.3			33.8			50.3	
Approach LOS		E			E			C			D	

Timer - Assigned Phs	1	2	3	4	5	6	7	8
Phs Duration (G+Y+Rc), s	17.0	77.9	17.3	37.9	19.6	75.3	21.3	33.8
Change Period (Y+Rc), s	7.0	7.0	6.5	6.5	7.0	7.0	6.5	6.5
Max Green Setting (Gmax), s	10.0	43.0	19.5	50.5	13.0	40.0	17.5	52.5
Max Q Clear Time (g_c+I1), s	12.0	24.5	9.4	17.6	12.6	17.9	14.4	19.4
Green Ext Time (p_c), s	0.0	12.6	0.2	1.9	0.0	8.4	0.5	1.3

Intersection Summary	
HCM 6th Ctrl Delay, s/veh	46.9
HCM 6th LOS	D

Notes

Unsignalized Delay for [SBR] is excluded from calculations of the approach delay and intersection delay.

> - ■>< ← < A t / VI 7

Movement	EBL	EBT	EBR	WBL	WBT	WBR	NBL	NBT	NBR	SBL	SBT	SBR
Lane Configurations	*i*i	t +T*			↑↑↑	↱↱	*i*i	f +1*		↰↰	↑↑	↱
Traffic Volume (veh/h)	936	764	19	65	461	520	12	269	50	464	152	380
Future Volume (veh/h)	936	764	19	65	461	520	12	269	50	464	152	380
Initial Q (Qb), veh	0	0	0	0	0	0	0	0	0	0	0	0
Ped-Bike Adj(A_pbT)	1.00		1.00	1.00		1.00	1.00		1.00	1.00		1.00
Parking Bus, Adj	1.00	1.00	1.00	1.00	1.00	1.00	1.00	1.00	1.00	1.00	1.00	1.00
Work Zone On Approach		No			No			No			No	
Adj Sat Flow, veh/h/ln	1900	1900	1900	1900	1900	1900	1900	1900	1900	1900	1900	1900
Adj Flow Rate, veh/h	996	813	20	69	490	553	13	286	53	494	162	404
Peak Hour Factor	0.94	0.94	0.94	0.94	0.94	0.94	0.94	0.94	0.94	0.94	0.94	0.94
Percent Heavy Veh, %	0	0	0	0	0	0	0	0	0	0	0	0
Cap, veh/h	929	1966	48	111	904	494	351	966	173	547	990	441
Arrive On Green	0.26	0.38	0.38	0.06	0.17	0.17	0.10	0.22	0.22	0.16	0.27	0.27
Sat Flow, veh/h	3510	5207	128	1810	5187	2834	3510	4424	792	3510	3610	1610
Grp Volume(v), veh/h	996	540	293	69	490	553	13	221	118	494	162	404
Grp Sat Flow(s),veh/h/ln	1755	1729	1877	1810	1729	1417	1755	1729	1758	1755	1805	1610
Q Serve(g_s), s	41.0	17.8	17.9	5.8	13.4	27.0	0.5	8.3	8.7	21.4	5.3	19.1
Cycle Q Clear(g_c), s	41.0	17.8	17.9	5.8	13.4	27.0	0.5	8.3	8.7	21.4	5.3	19.1
Prop In Lane	1.00		0.07	1.00		1.00	1.00		0.45	1.00		1.00
Lane Grp Cap(c), veh/h	929	1305	709	111	904	494	351	755	384	547	990	441
V/C Ratio(X)	1.07	0.41	0.41	0.62	0.54	1.12	0.04	0.29	0.31	0.90	0.16	0.92
Avail Cap(c_a), veh/h	929	1305	709	292	904	494	351	755	384	759	990	441
HCM Platoon Ratio	1.00	1.00	1.00	1.00	1.00	1.00	1.00	1.00	1.00	1.00	1.00	1.00
Upstream Filter(I)	0.59	0.59	0.59	0.94	0.94	0.94	1.00	1.00	1.00	1.00	1.00	1.00
Uniform Delay (d), s/veh	57.0	35.6	35.6	71.0	58.4	64.0	63.0	50.6	50.7	64.3	42.7	14.0
Incr Delay (d2), s/veh	45.0	0.1	0.2	2.0	0.5	76.6	0.0	1.0	2.1	9.1	0.4	26.1
Initial Q Delay(d3), s/veh	0.0	0.0	0.0	0.0	0.0	0.0	0.0	0.0	0.0	0.0	0.0	0.0
%ile BackOfQ(50%),veh/ln	28.4	7.4	8.0	2.7	5.8	14.8	0.2	3.7	4.1	10.1	2.4	9.7
Unsig. Movement Delay, s/veh												
LnGrp Delay(d), s/veh	102.0	35.7	35.8	73.0	58.9	140.6	63.0	51.6	52.8	73.4	43.1	40.1
LnGrp LOS	F	D	D	E	E	F	E	D	D	E	D	D
Approach Vol, veh/h		1829			1112			352			1060	
Approach Delay, s/veh		71.8			100.4			52.4			56.1	
Approach LOS		E			F			D			E	

Timer - Assigned Phs	1	2	3	4	5	6	7	8
Phs Duration (G+Y+Rc), s	23.0	50.0	48.0	34.0	31.6	41.4	16.5	65.5
Change Period (Y+Rc), s	7.5	7.5	7.0	7.0	7.5	7.5	7.0	7.0
Max Green Setting (Gmax), s	15.5	42.5	41.0	27.0	33.5	24.5	25.0	43.0
Max Q Clear Time (g_c+I1), s	12.5	21.1	43.0	29.0	23.4	10.7	7.8	19.9
Green Ext Time (p_c), s	0.0	1.7	0.0	0.0	0.7	1.4	0.1	3.9

Intersection Summary	
HCM 6th Ctrl Delay, s/veh	73.7
HCM 6th LOS	E

Movement	EBL	EBT	EBR	WBL	WBT	WBR	NBL	NBT	NBR	SBL	SBT	SBR
Lane Configurations												
Traffic Volume (veh/h)	115	262	135	445	901	301	181	822	128	153	849	69
Future Volume (veh/h)	115	262	135	445	901	301	181	822	128	153	849	69
Initial Q (Qb), veh	0	0	0	0	0	0	0	0	0	0	0	0
Ped-Bike Adj(A_pbT)	1.00		1.00	1.00		1.00	1.00		0.99	1.00		0.98
Parking Bus, Adj	1.00	1.00	1.00	1.00	1.00	1.00	1.00	1.00	1.00	1.00	1.00	1.00
Work Zone On Approach		No			No			No			No	
Adj Sat Flow, veh/h/ln	1900	1900	1900	1900	1900	1900	1900	1900	1900	1900	1900	1900
Adj Flow Rate, veh/h	129	294	152	500	1012	338	203	924	144	172	954	78
Peak Hour Factor	0.89	0.89	0.89	0.89	0.89	0.89	0.89	0.89	0.89	0.89	0.89	0.89
Percent Heavy Veh, %	0	0	0	0	0	0	0	0	0	0	0	0
Cap, veh/h	233	1690	524	547	2153	668	244	1841	447	214	1693	137
Arrive On Green	0.07	0.33	0.33	0.16	0.42	0.42	0.07	0.28	0.28	0.06	0.27	0.27
Sat Flow, veh/h	3510	5187	1607	3510	5187	1610	3510	6536	1588	3510	6200	502
Grp Volume(v), veh/h	129	294	152	500	1012	338	203	924	144	172	752	280
Grp Sat Flow(s),veh/h/ln	1755	1729	1607	1755	1729	1610	1755	1634	1588	1755	1634	1800
Q Serve(g_s), s	5.9	6.7	11.6	23.1	23.4	25.6	9.4	19.5	11.8	8.0	21.8	22.1
Cycle Q Clear(g_c), s	5.9	6.7	11.6	23.1	23.4	25.6	9.4	19.5	11.8	8.0	21.8	22.1
Prop In Lane	1.00		1.00	1.00		1.00	1.00		1.00	1.00		0.28
Lane Grp Cap(c), veh/h	233	1690	524	547	2153	668	244	1841	447	214	1338	492
V/C Ratio(X)	0.55	0.17	0.29	0.91	0.47	0.51	0.83	0.50	0.32	0.80	0.56	0.57
Avail Cap(c_a), veh/h	234	1690	524	670	2153	668	277	1841	447	277	1338	492
HCM Platoon Ratio	1.00	1.00	1.00	1.00	1.00	1.00	1.00	1.00	1.00	1.00	1.00	1.00
Upstream Filter(I)	1.00	1.00	1.00	1.00	1.00	1.00	0.98	0.98	0.98	1.00	1.00	1.00
Uniform Delay (d), s/veh	74.6	39.7	41.4	68.6	35.1	35.7	75.8	49.6	46.8	76.5	51.5	51.6
Incr Delay (d2), s/veh	1.6	0.2	1.4	13.8	0.7	2.7	15.2	1.0	1.9	9.5	1.7	4.7
Initial Q Delay(d3), s/veh	0.0	0.0	0.0	0.0	0.0	0.0	0.0	0.0	0.0	0.0	0.0	0.0
%ile BackOfQ(50%),veh/ln	2.7	2.8	4.7	11.2	9.7	10.3	4.7	8.0	4.8	3.8	9.0	10.4
Unsig. Movement Delay, s/veh												
LnGrp Delay(d), s/veh	76.3	40.0	42.8	82.3	35.8	38.4	91.0	50.5	48.7	86.0	53.2	56.3
LnGrp LOS	E	D	D	F	D	D	F	D	D	F	D	E
Approach Vol, veh/h		575			1850			1271			1204	
Approach Delay, s/veh		48.9			48.9			56.8			58.6	
Approach LOS		D			D			E			E	

Timer - Assigned Phs	1	2	3	4	5	6	7	8
Phs Duration (G+Y+Rc), s	17.1	53.5	33.2	61.3	18.5	52.1	18.5	76.0
Change Period (Y+Rc), s	7.0	7.0	7.5	7.5	7.0	7.0	7.5	7.5
Max Green Setting (Gmax), s	13.0	43.5	31.5	48.0	13.0	43.5	11.0	68.5
Max Q Clear Time (g_c+I1), s	10.0	21.5	25.1	13.6	11.4	24.1	7.9	27.6
Green Ext Time (p_c), s	0.1	7.7	0.6	2.2	0.1	7.2	0.1	9.0

Intersection Summary	
HCM 6th Ctrl Delay, s/veh	53.3
HCM 6th LOS	D

> - ■>< ← < A t MJ 7

Movement	EBL	EBT	EBR	WBL	WBT	WBR	NBL	NBT	NBR	SBL	SBT	SBR
Lane Configurations	'i's	+++	r	'i's	+++	f	Vi	tttt	f	Vi	ttti*	
Traffic Volume (veh/h)	299	949	304	362	592	202	239	1139	346	331	1032	87
Future Volume (veh/h)	299	949	304	362	592	202	239	1139	346	331	1032	87
Initial Q (Qb), veh	0	0	0	0	0	0	0	0	0	0	0	0
Ped-Bike Adj(A_pbT)	1.00		0.98	1.00		0.99	1.00		0.98	1.00		1.00
Parking Bus, Adj	1.00	1.00	1.00	1.00	1.00	1.00	1.00	1.00	1.00	1.00	1.00	1.00
Work Zone On Approach		No			No			No			No	
Adj Sat Flow, veh/h/ln	1900	1900	1900	1900	1900	1900	1900	1900	1900	1900	1900	1900
Adj Flow Rate, veh/h	322	1020	327	389	637	217	257	1225	372	356	1110	94
Peak Hour Factor	0.93	0.93	0.93	0.93	0.93	0.93	0.93	0.93	0.93	0.93	0.93	0.93
Percent Heavy Veh, %	0	0	0	0	0	0	0	0	0	0	0	0
Cap, veh/h	668	1276	390	431	926	285	302	2232	541	400	2285	192
Arrive On Green	0.19	0.25	0.25	0.12	0.18	0.18	0.09	0.34	0.34	0.11	0.37	0.37
Sat Flow, veh/h	3510	5187	1584	3510	5187	1594	3510	6536	1584	3510	6187	521
Grp Volume(v), veh/h	322	1020	327	389	637	217	257	1225	372	356	878	326
Grp Sat Flow(s),veh/h/ln	1755	1729	1584	1755	1729	1594	1755	1634	1584	1755	1634	1806
Q Serve(g_s), s	13.5	30.5	24.9	18.0	19.0	16.1	11.9	25.1	22.7	16.5	22.7	22.9
Cycle Q Clear(g_c), s	13.5	30.5	24.9	18.0	19.0	16.1	11.9	25.1	22.7	16.5	22.7	22.9
Prop In Lane	1.00		1.00	1.00		1.00	1.00		1.00	1.00		0.29
Lane Grp Cap(c), veh/h	668	1276	390	431	926	285	302	2232	541	400	1810	667
V/C Ratio(X)	0.48	0.80	0.84	0.90	0.69	0.76	0.85	0.55	0.69	0.89	0.49	0.49
Avail Cap(c_a), veh/h	668	1509	461	489	1509	464	489	2232	541	489	1810	667
HCM Platoon Ratio	1.00	1.00	1.00	1.00	1.00	1.00	1.00	1.00	1.00	1.00	1.00	1.00
Upstream Filter(I)	1.00	1.00	1.00	1.00	1.00	1.00	0.86	0.86	0.86	1.00	1.00	1.00
Uniform Delay (d), s/veh	59.6	58.4	35.0	71.4	63.5	36.7	74.3	44.0	21.6	72.1	40.0	40.0
Incr Delay (d2), s/veh	0.2	2.7	11.4	17.2	0.9	4.2	3.5	0.8	6.0	14.1	0.9	2.6
Initial Q Delay(d3), s/veh	0.0	0.0	0.0	0.0	0.0	0.0	0.0	0.0	0.0	0.0	0.0	0.0
%ile BackOfQ(50%),veh/ln	5.9	13.2	10.5	8.9	8.2	6.5	5.4	10.1	8.9	8.1	9.1	10.5
Unsig. Movement Delay, s/veh												
LnGrp Delay(d), s/veh	59.8	61.1	46.3	88.5	64.4	40.9	77.8	44.9	27.7	86.2	40.9	42.6
LnGrp LOS	E	E	D	F	E	D	E	D	C	F	D	D
Approach Vol, veh/h		1669			1243			1854			1560	
Approach Delay, s/veh		57.9			67.8			46.0			51.6	
Approach LOS		E			E			D			D	

Timer - Assigned Phs	1	2	3	4	5	6	7	8
Phs Duration (G+Y+Rc), s	25.8	63.3	27.8	48.1	21.2	67.9	38.9	37.0
Change Period (Y+Rc), s	7.0	7.0	7.5	7.5	7.0	7.0	7.5	7.5
Max Green Setting (Gmax), s	23.0	42.0	23.0	48.0	23.0	42.0	23.0	48.0
Max Q Clear Time (g_c+I1), s	18.5	27.1	20.0	32.5	13.9	24.9	15.5	21.0
Green Ext Time (p_c), s	0.3	9.1	0.2	6.6	0.3	7.9	0.4	4.7

Intersection Summary	
HCM 6th Ctrl Delay, s/veh	54.8
HCM 6th LOS	D

Notes

User approved pedestrian interval to be less than phase max green.

> - ■>< ← < A t MJ 7

Movement	EBL	EBT	EBR	WBL	WBT	WBR	NBL	NBT	NBR	SBL	SBT	SBR
Lane Configurations	Vi	↑	*f*	vs	++	*r*	's'i	tttt	*r*	's'i	tttt	↱
Traffic Volume (veh/h)	712	179	583	217	211	37	319	919	375	248	1019	533
Future Volume (veh/h)	712	179	583	217	211	37	319	919	375	248	1019	533
Initial Q (Qb), veh	0	0	0	0	0	0	0	0	0	0	0	0
Ped-Bike Adj(A_pbT)	1.00		1.00	1.00		1.00	1.00		0.99	1.00		1.00
Parking Bus, Adj	1.00	1.00	1.00	1.00	1.00	1.00	1.00	1.00	1.00	1.00	1.00	1.00
Work Zone On Approach		No			No			No			No	
Adj Sat Flow, veh/h/ln	1900	1900	1900	1900	1900	1900	1900	1900	1900	1900	1900	1900
Adj Flow Rate, veh/h	734	185	601	224	218	38	329	947	387	256	1051	549
Peak Hour Factor	0.97	0.97	0.97	0.97	0.97	0.97	0.97	0.97	0.97	0.97	0.97	0.97
Percent Heavy Veh, %	0	0	0	0	0	0	0	0	0	0	0	0
Cap, veh/h	968	642	544	339	573	255	379	2141	679	303	1999	937
Arrive On Green	0.28	0.34	0.34	0.10	0.16	0.16	0.11	0.33	0.33	0.09	0.31	0.31
Sat Flow, veh/h	3510	1900	1610	3510	3610	1610	3510	6536	1598	3510	6536	1610
Grp Volume(v), veh/h	734	185	601	224	218	38	329	947	387	256	1051	549
Grp Sat Flow(s),veh/h/ln	1755	1900	1610	1755	1805	1610	1755	1634	1598	1755	1634	1610
Q Serve(g_s), s	27.8	10.4	49.0	8.9	7.8	2.9	13.4	16.5	26.7	10.4	19.3	31.4
Cycle Q Clear(g_c), s	27.8	10.4	49.0	8.9	7.8	2.9	13.4	16.5	26.7	10.4	19.3	31.4
Prop In Lane	1.00		1.00	1.00		1.00	1.00		1.00	1.00		1.00
Lane Grp Cap(c), veh/h	968	642	544	339	573	255	379	2141	679	303	1999	937
V/C Ratio(X)	0.76	0.29	1.10	0.66	0.38	0.15	0.87	0.44	0.57	0.85	0.53	0.59
Avail Cap(c_a), veh/h	968	642	544	339	573	255	484	2141	679	339	1999	937
HCM Platoon Ratio	1.00	1.00	1.00	1.00	1.00	1.00	1.00	1.00	1.00	1.00	1.00	1.00
Upstream Filter(I)	1.00	1.00	1.00	1.00	1.00	1.00	0.94	0.94	0.94	0.90	0.90	0.90
Uniform Delay (d), s/veh	48.1	35.2	48.0	63.2	54.6	52.6	63.7	38.3	31.7	65.3	41.6	19.2
Incr Delay (d2), s/veh	5.5	0.1	70.4	9.7	0.2	0.1	10.3	0.6	3.2	13.5	0.9	2.4
Initial Q Delay(d3), s/veh	0.0	0.0	0.0	0.0	0.0	0.0	0.0	0.0	0.0	0.0	0.0	0.0
%ile BackOfQ(50%),veh/ln	12.8	4.8	29.8	4.4	3.6	1.2	6.4	6.6	10.8	5.1	7.7	11.9
Unsig. Movement Delay, s/veh												
LnGrp Delay(d), s/veh	53.6	35.3	118.4	72.9	54.8	52.7	74.0	39.0	35.0	78.8	42.5	21.7
LnGrp LOS	D	D	F	E	D	D	E	D	C	E	D	C
Approach Vol, veh/h		1520			480			1663			1856	
Approach Delay, s/veh		77.0			63.1			45.0			41.4	
Approach LOS		E			E			D			D	

Timer - Assigned Phs	1	2	3	4	5	6	7	8
Phs Duration (G+Y+Rc), s	17.5	53.5	19.0	55.0	20.7	50.3	45.0	29.0
Change Period (Y+Rc), s	5.0	6.0	5.0	6.0	5.0	6.0	5.0	6.0
Max Green Setting (Gmax), s	14.0	46.0	14.0	49.0	20.0	40.0	40.0	23.0
Max Q Clear Time (g_c+I1), s	12.4	28.7	10.9	51.0	15.4	33.4	29.8	9.8
Green Ext Time (p_c), s	0.1	4.4	0.1	0.0	0.3	3.2	1.2	0.7

Intersection Summary	
HCM 6th Ctrl Delay, s/veh	54.1
HCM 6th LOS	D

Notes

User approved pedestrian interval to be less than phase max green.

Movement	EBL	EBT	EBR	WBL	WBT	WBR	NBL	NBT	NBR	SBL	SBT	SBR
Lane Configurations												
Traffic Volume (veh/h)	115	262	135	412	901	301	181	822	128	153	849	69
Future Volume (veh/h)	115	262	135	412	901	301	181	822	128	153	849	69
Initial Q (Qb), veh	0	0	0	0	0	0	0	0	0	0	0	0
Ped-Bike Adj(A_pbT)	1.00		1.00	1.00		1.00	1.00		0.99	1.00		0.98
Parking Bus, Adj	1.00	1.00	1.00	1.00	1.00	1.00	1.00	1.00	1.00	1.00	1.00	1.00
Work Zone On Approach		No			No			No			No	
Adj Sat Flow, veh/h/ln	1900	1900	1900	1900	1900	1900	1900	1900	1900	1900	1900	1900
Adj Flow Rate, veh/h	129	294	152	463	1012	338	203	924	144	172	954	78
Peak Hour Factor	0.89	0.89	0.89	0.89	0.89	0.89	0.89	0.89	0.89	0.89	0.89	0.89
Percent Heavy Veh, %	0	0	0	0	0	0	0	0	0	0	0	0
Cap, veh/h	233	1713	531	510	2122	659	245	1881	457	214	1728	140
Arrive On Green	0.07	0.33	0.33	0.15	0.41	0.41	0.07	0.29	0.29	0.06	0.28	0.28
Sat Flow, veh/h	3510	5187	1607	3510	5187	1610	3510	6536	1588	3510	6200	502
Grp Volume(v), veh/h	129	294	152	463	1012	338	203	924	144	172	752	280
Grp Sat Flow(s),veh/h/ln	1755	1729	1607	1755	1729	1610	1755	1634	1588	1755	1634	1800
Q Serve(g_s), s	5.9	6.6	11.5	21.4	23.6	25.9	9.4	19.4	11.7	8.0	21.6	21.9
Cycle Q Clear(g_c), s	5.9	6.6	11.5	21.4	23.6	25.9	9.4	19.4	11.7	8.0	21.6	21.9
Prop In Lane	1.00		1.00	1.00		1.00	1.00		1.00	1.00		0.28
Lane Grp Cap(c), veh/h	233	1713	531	510	2122	659	245	1881	457	214	1367	502
V/C Ratio(X)	0.55	0.17	0.29	0.91	0.48	0.51	0.83	0.49	0.32	0.80	0.55	0.56
Avail Cap(c_a), veh/h	234	1713	531	649	2122	659	319	1881	457	277	1367	502
HCM Platoon Ratio	1.00	1.00	1.00	1.00	1.00	1.00	1.00	1.00	1.00	1.00	1.00	1.00
Upstream Filter(I)	1.00	1.00	1.00	1.00	1.00	1.00	0.98	0.98	0.98	1.00	1.00	1.00
Uniform Delay (d), s/veh	74.6	39.2	40.9	69.4	35.8	36.5	75.8	48.7	46.0	76.5	50.7	50.8
Incr Delay (d2), s/veh	1.6	0.2	1.4	12.6	0.8	2.8	10.1	0.9	1.8	9.5	1.6	4.4
Initial Q Delay(d3), s/veh	0.0	0.0	0.0	0.0	0.0	0.0	0.0	0.0	0.0	0.0	0.0	0.0
%ile BackOfQ(50%),veh/ln	2.7	2.8	4.7	10.3	9.8	10.4	4.5	7.9	4.8	3.8	8.9	10.3
Unsig. Movement Delay, s/veh												
LnGrp Delay(d), s/veh	76.3	39.4	42.2	82.0	36.6	39.3	85.8	49.7	47.8	86.0	52.3	55.2
LnGrp LOS	E	D	D	F	D	D	F	D	D	F	D	E
Approach Vol, veh/h		575			1813			1271			1204	
Approach Delay, s/veh		48.4			48.7			55.2			57.8	
Approach LOS		D			D			E			E	

Timer - Assigned Phs	1	2	3	4	5	6	7	8
Phs Duration (G+Y+Rc), s	17.1	54.5	31.5	62.0	18.5	53.0	18.5	75.0
Change Period (Y+Rc), s	7.0	7.0	7.5	7.5	7.0	7.0	7.5	7.5
Max Green Setting (Gmax), s	13.0	44.5	30.5	48.0	15.0	42.5	11.0	67.5
Max Q Clear Time (g_c+I1), s	10.0	21.4	23.4	13.5	11.4	23.9	7.9	27.9
Green Ext Time (p_c), s	0.1	7.8	0.5	2.2	0.1	7.0	0.1	8.9

Intersection Summary	
HCM 6th Ctrl Delay, s/veh	52.6
HCM 6th LOS	D

Movement	EBL	EBT	EBR	WBL	WBT	WBR	NBL	NBT	NBR	SBL	SBT	SBR
Lane Configurations												
Traffic Volume (veh/h)	299	949	304	329	592	202	239	1139	346	331	1032	87
Future Volume (veh/h)	299	949	304	329	592	202	239	1139	346	331	1032	87
Initial Q (Qb), veh	0	0	0	0	0	0	0	0	0	0	0	0
Ped-Bike Adj(A_pbT)	1.00		0.98	1.00		0.99	1.00		0.98	1.00		1.00
Parking Bus, Adj	1.00	1.00	1.00	1.00	1.00	1.00	1.00	1.00	1.00	1.00	1.00	1.00
Work Zone On Approach		No			No			No			No	
Adj Sat Flow, veh/h/ln	1900	1900	1900	1900	1900	1900	1900	1900	1900	1900	1900	1900
Adj Flow Rate, veh/h	322	1020	327	354	637	217	257	1225	372	356	1110	94
Peak Hour Factor	0.93	0.93	0.93	0.93	0.93	0.93	0.93	0.93	0.93	0.93	0.93	0.93
Percent Heavy Veh, %	0	0	0	0	0	0	0	0	0	0	0	0
Cap, veh/h	376	1509	461	397	1540	475	300	2003	485	399	2070	174
Arrive On Green	0.11	0.29	0.29	0.11	0.30	0.30	0.09	0.31	0.31	0.11	0.33	0.33
Sat Flow, veh/h	3510	5187	1585	3510	5187	1600	3510	6536	1584	3510	6187	521
Grp Volume(v), veh/h	322	1020	327	354	637	217	257	1225	372	356	878	326
Grp Sat Flow(s),veh/h/ln	1755	1729	1585	1755	1729	1600	1755	1634	1584	1755	1634	1806
Q Serve(g_s), s	14.9	28.6	23.0	16.4	16.2	13.0	11.9	26.4	24.9	16.5	24.0	24.2
Cycle Q Clear(g_c), s	14.9	28.6	23.0	16.4	16.2	13.0	11.9	26.4	24.9	16.5	24.0	24.2
Prop In Lane	1.00		1.00	1.00		1.00	1.00		1.00	1.00		0.29
Lane Grp Cap(c), veh/h	376	1509	461	397	1540	475	300	2003	485	399	1641	604
V/C Ratio(X)	0.86	0.68	0.71	0.89	0.41	0.46	0.86	0.61	0.77	0.89	0.54	0.54
Avail Cap(c_a), veh/h	457	1509	461	479	1540	475	383	2003	485	468	1641	604
HCM Platoon Ratio	1.00	1.00	1.00	1.00	1.00	1.00	1.00	1.00	1.00	1.00	1.00	1.00
Upstream Filter(I)	1.00	1.00	1.00	1.00	1.00	1.00	0.86	0.86	0.86	1.00	1.00	1.00
Uniform Delay (d), s/veh	72.4	51.6	29.8	72.2	46.5	24.0	74.5	48.8	26.1	72.1	44.5	44.6
Incr Delay (d2), s/veh	11.1	2.4	8.9	14.8	0.8	3.1	10.5	1.2	9.6	15.8	1.3	3.4
Initial Q Delay(d3), s/veh	0.0	0.0	0.0	0.0	0.0	0.0	0.0	0.0	0.0	0.0	0.0	0.0
%ile BackOfQ(50%),veh/ln	7.1	12.4	9.6	8.0	6.9	5.2	5.7	10.7	10.3	8.2	9.7	11.2
Unsig. Movement Delay, s/veh												
LnGrp Delay(d), s/veh	83.5	54.1	38.7	86.9	47.3	27.1	84.9	50.0	35.8	87.9	45.7	48.0
LnGrp LOS	F	D	D	F	D	C	F	D	D	F	D	D
Approach Vol, veh/h		1669			1208			1854			1560	
Approach Delay, s/veh		56.7			55.3			52.0			55.8	
Approach LOS		E			E			D			E	

Timer - Assigned Phs	1	2	3	4	5	6	7	8
Phs Duration (G+Y+Rc), s	25.8	57.6	26.2	55.5	21.1	62.2	25.2	56.5
Change Period (Y+Rc), s	7.0	7.0	7.5	7.5	7.0	7.0	7.5	7.5
Max Green Setting (Gmax), s	22.0	43.5	22.5	48.0	18.0	47.5	21.5	49.0
Max Q Clear Time (g_c+I1), s	18.5	28.4	18.4	30.6	13.9	26.2	16.9	18.2
Green Ext Time (p_c), s	0.2	9.1	0.3	7.0	0.2	8.9	0.3	4.8

Intersection Summary	
HCM 6th Ctrl Delay, s/veh	54.8
HCM 6th LOS	D

APPENDIX G1

Rancho Cucamonga

Rancho Cucamonga Metrolink Station

11208 Azusa Court, Rancho Cucamonga, CA 91730

Saturday, June 22nd, 2024

		Inventory	12:00 AM	12:15 AM	12:30 AM	12:45 AM	1:00 AM	1:15 AM	1:30 AM	1:45 AM	2:00 AM
West Lot	Regular	317	7	6	6	6	6	7	7	7	6
	Handicap	12	0	0	0	0	0	0	0	0	0
	Reserved	1	0	0	0	0	0	0	0	0	0
	Subtotal	**330**	**7**	**6**	**6**	**6**	**6**	**7**	**7**	**7**	**6**
Total Occupancy		330	7	6	6	6	6	7	7	7	6
Total Percent			**2%**	**2%**	**2%**	**2%**	**2%**	**2%**	**2%**	**2%**	**2%**

		Inventory	12:00 AM	12:15 AM	12:30 AM	12:45 AM	1:00 AM	1:15 AM	1:30 AM	1:45 AM	2:00 AM
East Lot	Regular	639	3	3	3	3	3	3	3	3	3
	Handicap	11	1	1	1	1	1	1	1	1	1
	Subtotal	**650**	**4**	**4**	**4**	**4**	**4**	**4**	**4**	**4**	**4**
Total Occupancy		650	4	4	4	4	4	4	4	4	4
Total Percent			**1%**	**1%**	**1%**	**1%**	**1%**	**1%**	**1%**	**1%**	**1%**

Counts Unlimited, Inc.
PO Box 1178
Corona, CA 92878
951-268-6268

Rancho Cucamonga

Rancho Cucamonga Metrolink Statio
11208 Azusa Court, Rancho Cucamo

Saturday, June 22nd, 2024

		2:15 AM	2:30 AM	2:45 AM	3:00 AM	3:15 AM	3:30 AM	3:45 AM	4:00 AM	4:15 AM	4:30 AM	4:45 AM
West Lot	Regular	6	6	6	6	6	6	6	6	6	6	6
	Handicap	0	0	0	0	0	0	0	0	0	0	0
	Reserved	0	0	0	0	0	0	0	0	0	0	0
	Subtotal	**6**	**6**	**6**	**6**	**6**	**6**	**6**	**6**	**6**	**6**	**6**
Total Occupancy		6	6	6	6	6	6	6	6	6	6	6
Total Percent		**2%**	**2%**	**2%**	**2%**	**2%**	**2%**	**2%**	**2%**	**2%**	**2%**	**2%**

		2:15 AM	2:30 AM	2:45 AM	3:00 AM	3:15 AM	3:30 AM	3:45 AM	4:00 AM	4:15 AM	4:30 AM	4:45 AM
East Lot	Regular	3	3	3	3	3	3	3	3	3	3	3
	Handicap	1	1	1	1	1	1	1	1	1	1	1
	Subtotal	**4**	**4**	**4**	**4**	**4**	**4**	**4**	**4**	**4**	**4**	**4**
Total Occupancy		4	4	4	4	4	4	4	4	4	4	4
Total Percent		**1%**	**1%**	**1%**	**1%**	**1%**	**1%**	**1%**	**1%**	**1%**	**1%**	**1%**

Counts Unlimited, Inc.
PO Box 1178
Corona, CA 92878
951-268-6268

Rancho Cucamonga

Rancho Cucamonga Metrolink Statio
11208 Azusa Court, Rancho Cucamo

Saturday, June 22nd, 2024

		5:00 AM	5:15 AM	5:30 AM	5:45 AM	6:00 AM	6:15 AM	6:30 AM	6:45 AM	7:00 AM	7:15 AM	7:30 AM
West Lot	Regular	6	6	6	6	7	7	7	7	8	8	8
	Handicap	0	0	0	0	0	0	0	0	0	0	0
	Reserved	0	0	0	0	0	0	1	1	1	1	1
	Subtotal	**6**	**6**	**6**	**6**	**7**	**7**	**8**	**8**	**9**	**9**	**9**
Total Occupancy		6	6	6	6	7	7	8	8	9	9	9
Total Percent		**2%**	**2%**	**2%**	**2%**	**2%**	**2%**	**2%**	**2%**	**3%**	**3%**	**3%**

		5:00 AM	5:15 AM	5:30 AM	5:45 AM	6:00 AM	6:15 AM	6:30 AM	6:45 AM	7:00 AM	7:15 AM	7:30 AM
East Lot	Regular	3	3	3	3	4	4	4	4	6	5	5
	Handicap	1	1	1	1	1	1	1	1	1	1	1
	Subtotal	**4**	**4**	**4**	**4**	**5**	**5**	**5**	**5**	**7**	**6**	**6**
Total Occupancy		4	4	4	4	5	5	5	5	7	6	6
Total Percent		**1%**	**1%**	**1%**	**1%**	**1%**	**1%**	**1%**	**1%**	**1%**	**1%**	**1%**

Counts Unlimited, Inc.
PO Box 1178
Corona, CA 92878
951-268-6268

Rancho Cucamonga

Rancho Cucamonga Metrolink Statio
11208 Azusa Court, Rancho Cucamo

Saturday, June 22nd, 2024

		7:45 AM	8:00 AM	8:15 AM	8:30 AM	8:45 AM	9:00 AM	9:15 AM	9:30 AM	9:45 AM	10:00 AM	10:15 AM
West Lot	Regular	7	7	7	7	8	10	8	8	7	7	7
	Handicap	0	0	0	0	0	0	0	0	0	0	0
	Reserved	1	1	1	1	1	1	1	1	1	1	1
	Subtotal	**8**	**8**	**8**	**8**	**9**	**11**	**9**	**9**	**8**	**8**	**8**
Total Occupancy		8	8	8	8	9	11	9	9	8	8	8
Total Percent		**2%**	**2%**	**2%**	**2%**	**3%**	**3%**	**3%**	**3%**	**2%**	**2%**	**2%**

		7:45 AM	8:00 AM	8:15 AM	8:30 AM	8:45 AM	9:00 AM	9:15 AM	9:30 AM	9:45 AM	10:00 AM	10:15 AM
East Lot	Regular	5	5	7	7	10	11	10	10	11	11	10
	Handicap	1	1	1	1	1	1	1	1	1	1	1
	Subtotal	**6**	**6**	**8**	**8**	**11**	**12**	**11**	**11**	**12**	**12**	**11**
Total Occupancy		6	6	8	8	11	12	11	11	12	12	11
Total Percent		**1%**	**1%**	**1%**	**1%**	**2%**	**2%**	**2%**	**2%**	**2%**	**2%**	**2%**

Counts Unlimited, Inc.
PO Box 1178
Corona, CA 92878
951-268-6268

Rancho Cucamonga

Rancho Cucamonga Metrolink Statio
11208 Azusa Court, Rancho Cucamo

Saturday, June 22nd, 2024

		10:30 AM	10:45 AM	11:00 AM	11:15 AM	11:30 AM	11:45 AM	12:00 PM	12:15 PM	12:30 PM	12:45 PM	1:00 PM
West Lot	Regular	7	7	7	6	6	8	9	10	10	10	10
	Handicap	0	0	0	0	0	0	0	0	0	0	0
	Reserved	1	1	1	1	1	1	1	1	1	1	1
	Subtotal	**8**	**8**	**8**	**7**	**7**	**9**	**10**	**11**	**11**	**11**	**11**
Total Occupancy		8	8	8	7	7	9	10	11	11	11	11
Total Percent		**2%**	**2%**	**2%**	**2%**	**2%**	**3%**	**3%**	**3%**	**3%**	**3%**	**3%**

		10:30 AM	10:45 AM	11:00 AM	11:15 AM	11:30 AM	11:45 AM	12:00 PM	12:15 PM	12:30 PM	12:45 PM	1:00 PM
East Lot	Regular	10	10	10	10	10	12	14	14	14	14	15
	Handicap	1	1	1	1	1	1	1	1	1	1	1
	Subtotal	**11**	**11**	**11**	**11**	**11**	**13**	**15**	**15**	**15**	**15**	**16**
Total Occupancy		11	11	11	11	11	13	15	15	15	15	16
Total Percent		**2%**	**2%**	**2%**	**2%**	**2%**	**2%**	**2%**	**2%**	**2%**	**2%**	**2%**

Counts Unlimited, Inc.
PO Box 1178
Corona, CA 92878
951-268-6268

Rancho Cucamonga

Rancho Cucamonga Metrolink Statio
11208 Azusa Court, Rancho Cucamo

Saturday, June 22nd, 2024

		1:15 PM	1:30 PM	1:45 PM	2:00 PM	2:15 PM	2:30 PM	2:45 PM	3:00 PM	3:15 PM	3:30 PM	3:45 PM
West Lot	Regular	11	10	11	11	10	11	13	12	13	13	13
	Handicap	0	0	0	0	0	0	0	0	0	0	0
	Reserved	1	1	1	1	1	1	1	1	1	1	1
	Subtotal	**12**	**11**	**12**	**12**	**11**	**12**	**14**	**13**	**14**	**14**	**14**
Total Occupancy		12	11	12	12	11	12	14	13	14	14	14
Total Percent		**4%**	**3%**	**4%**	**4%**	**3%**	**4%**	**4%**	**4%**	**4%**	**4%**	**4%**

		1:15 PM	1:30 PM	1:45 PM	2:00 PM	2:15 PM	2:30 PM	2:45 PM	3:00 PM	3:15 PM	3:30 PM	3:45 PM
East Lot	Regular	15	15	15	15	15	15	16	19	16	16	16
	Handicap	1	1	1	1	1	1	1	1	1	1	1
	Subtotal	**16**	**16**	**16**	**16**	**16**	**16**	**17**	**20**	**17**	**17**	**17**
Total Occupancy		16	16	16	16	16	16	17	20	17	17	17
Total Percent		**2%**	**2%**	**2%**	**2%**	**2%**	**2%**	**3%**	**3%**	**3%**	**3%**	**3%**

Counts Unlimited, Inc.
PO Box 1178
Corona, CA 92878
951-268-6268

Rancho Cucamonga

Rancho Cucamonga Metrolink Statio
11208 Azusa Court, Rancho Cucamo

Saturday, June 22nd, 2024

		4:00 PM	4:15 PM	4:30 PM	4:45 PM	5:00 PM	5:15 PM	5:30 PM	5:45 PM	6:00 PM	6:15 PM	6:30 PM
West Lot	Regular	11	13	11	11	12	12	12	13	12	10	11
	Handicap	0	0	0	0	0	0	0	0	0	0	0
	Reserved	1	1	1	1	1	1	1	1	1	1	1
	Subtotal	**12**	**14**	**12**	**12**	**13**	**13**	**13**	**14**	**13**	**11**	**12**
Total Occupancy		12	14	12	12	13	13	13	14	13	11	12
Total Percent		**4%**	**4%**	**4%**	**4%**	**4%**	**4%**	**4%**	**4%**	**4%**	**3%**	**4%**

		4:00 PM	4:15 PM	4:30 PM	4:45 PM	5:00 PM	5:15 PM	5:30 PM	5:45 PM	6:00 PM	6:15 PM	6:30 PM
East Lot	Regular	14	14	14	16	11	11	12	12	11	10	9
	Handicap	1	1	1	1	1	1	1	1	1	1	1
	Subtotal	**15**	**15**	**15**	**17**	**12**	**12**	**13**	**13**	**12**	**11**	**10**
Total Occupancy		15	15	15	17	12	12	13	13	12	11	10
Total Percent		**2%**	**2%**	**2%**	**3%**	**2%**	**2%**	**2%**	**2%**	**2%**	**2%**	**2%**

Counts Unlimited, Inc.
PO Box 1178
Corona, CA 92878
951-268-6268

Rancho Cucamonga

Rancho Cucamonga Metrolink Statio
11208 Azusa Court, Rancho Cucamo

Saturday, June 22nd, 2024

		6:45 PM	7:00 PM	7:15 PM	7:30 PM	7:45 PM	8:00 PM	8:15 PM	8:30 PM	8:45 PM	9:00 PM	9:15 PM
West Lot	Regular	11	9	10	10	10	10	10	9	9	9	9
	Handicap	0	0	0	0	0	0	0	0	0	0	0
	Reserved	1	1	1	1	1	1	0	0	0	0	0
	Subtotal	**12**	**10**	**11**	**11**	**11**	**11**	**10**	**9**	**9**	**9**	**9**
Total Occupancy		12	10	11	11	11	11	10	9	9	9	9
Total Percent		**4%**	**3%**	**3%**	**3%**	**3%**	**3%**	**3%**	**3%**	**3%**	**3%**	**3%**

		6:45 PM	7:00 PM	7:15 PM	7:30 PM	7:45 PM	8:00 PM	8:15 PM	8:30 PM	8:45 PM	9:00 PM	9:15 PM
East Lot	Regular	10	9	9	9	9	10	10	9	9	7	7
	Handicap	1	1	1	1	1	1	1	1	1	1	1
	Subtotal	**11**	**10**	**10**	**10**	**10**	**11**	**11**	**10**	**10**	**8**	**8**
Total Occupancy		11	10	10	10	10	11	11	10	10	8	8
Total Percent		**2%**	**2%**	**2%**	**2%**	**2%**	**2%**	**2%**	**2%**	**2%**	**1%**	**1%**

Rancho Cucamonga

Rancho Cucamonga Metrolink Statio
11208 Azusa Court, Rancho Cucamo

Saturday, June 22nd, 2024

		9:30 PM	9:45 PM	10:00 PM	10:15 PM	10:30 PM	10:45 PM	11:00 PM	11:15 PM	11:30 PM	11:45 PM	12:00 AM
West Lot	Regular	9	9	9	9	9	9	5	5	5	5	5
	Handicap	0	0	0	0	0	0	0	0	0	0	0
	Reserved	0	0	0	0	0	0	0	0	0	0	0
	Subtotal	**9**	**9**	**9**	**9**	**9**	**9**	**5**	**5**	**5**	**5**	**5**
Total Occupancy		9	9	9	9	9	9	5	5	5	5	5
Total Percent		**3%**	**3%**	**3%**	**3%**	**3%**	**3%**	**2%**	**2%**	**2%**	**2%**	**2%**

		9:30 PM	9:45 PM	10:00 PM	10:15 PM	10:30 PM	10:45 PM	11:00 PM	11:15 PM	11:30 PM	11:45 PM	12:00 AM
East Lot	Regular	7	7	7	7	7	7	5	5	5	4	4
	Handicap	1	1	1	1	1	1	1	1	1	1	1
	Subtotal	**8**	**8**	**8**	**8**	**8**	**8**	**6**	**6**	**6**	**5**	**5**
Total Occupancy		8	8	8	8	8	8	6	6	6	5	5
Total Percent		**1%**	**1%**	**1%**	**1%**	**1%**	**1%**	**1%**	**1%**	**1%**	**1%**	**1%**

Counts Unlimited, Inc.
PO Box 1178
Corona, CA 92878
951-268-6268

Rancho Cucamonga

Rancho Cucamonga Metrolink Station

11208 Azusa Court, Rancho Cucamonga, CA 91730

Tuesday, June 25th, 2024

		Inventory	12:00 AM	12:15 AM	12:30 AM	12:45 AM	1:00 AM	1:15 AM	1:30 AM	1:45 AM	2:00 AM
West Lot	Regular	317	2	2	2	2	2	2	2	2	2
	Handicap	12	0	0	0	0	0	0	0	0	0
	Reserved	1	0	0	0	0	0	0	0	0	0
	Subtotal	**330**	**2**	**2**	**2**	**2**	**2**	**2**	**2**	**2**	**2**
Total Occupancy		330	2	2	2	2	2	2	2	2	2
Total Percent			**1%**	**1%**	**1%**	**1%**	**1%**	**1%**	**1%**	**1%**	**1%**

		Inventory	12:00 AM	12:15 AM	12:30 AM	12:45 AM	1:00 AM	1:15 AM	1:30 AM	1:45 AM	2:00 AM
East Lot	Regular	639	2	2	2	2	2	2	2	2	2
	Handicap	11	0	0	0	0	0	0	0	0	0
	Subtotal	**650**	**2**	**2**	**2**	**2**	**2**	**2**	**2**	**2**	**2**
Total Occupancy		650	2	2	2	2	2	2	2	2	2
Total Percent			**0%**	**0%**	**0%**	**0%**	**0%**	**0%**	**0%**	**0%**	**0%**

Counts Unlimited, Inc.
PO Box 1178
Corona, CA 92878
951-268-6268

Rancho Cucamonga

Rancho Cucamonga Metrolink Statio
11208 Azusa Court, Rancho Cucamo

Tuesday, June 25th, 2024

		2:15 AM	2:30 AM	2:45 AM	3:00 AM	3:15 AM	3:30 AM	3:45 AM	4:00 AM	4:15 AM	4:30 AM	4:45 AM
West Lot	Regular	2	2	2	2	2	2	3	7	14	14	21
	Handicap	0	0	0	0	0	0	0	0	0	1	2
	Reserved	0	0	0	0	0	0	0	1	1	1	1
	Subtotal	**2**	**2**	**2**	**2**	**2**	**2**	**3**	**8**	**15**	**16**	**24**
Total Occupancy		2	2	2	2	2	2	3	8	15	16	24
Total Percent		**1%**	**1%**	**1%**	**1%**	**1%**	**1%**	**1%**	**2%**	**5%**	**5%**	**7%**

		2:15 AM	2:30 AM	2:45 AM	3:00 AM	3:15 AM	3:30 AM	3:45 AM	4:00 AM	4:15 AM	4:30 AM	4:45 AM
East Lot	Regular	2	2	2	3	7	7	10	15	24	27	33
	Handicap	0	0	0	0	0	0	1	3	3	3	3
	Subtotal	**2**	**2**	**2**	**3**	**7**	**7**	**11**	**18**	**27**	**30**	**36**
Total Occupancy		2	2	2	3	7	7	11	18	27	30	36
Total Percent		**0%**	**0%**	**0%**	**0%**	**1%**	**1%**	**2%**	**3%**	**4%**	**5%**	**6%**

Counts Unlimited, Inc.
PO Box 1178
Corona, CA 92878
951-268-6268

Rancho Cucamonga

Rancho Cucamonga Metrolink Statio
11208 Azusa Court, Rancho Cucamo

Tuesday, June 25th, 2024

		5:00 AM	5:15 AM	5:30 AM	5:45 AM	6:00 AM	6:15 AM	6:30 AM	6:45 AM	7:00 AM	7:15 AM	7:30 AM
West Lot	Regular	28	29	40	40	48	50	57	64	74	72	71
	Handicap	2	2	3	3	4	4	4	5	5	5	5
	Reserved	1	1	1	1	1	1	1	1	1	1	1
	Subtotal	**31**	**32**	**44**	**44**	**53**	**55**	**62**	**70**	**80**	**78**	**77**

	Total Occupancy	31	32	44	44	53	55	62	70	80	78	77
	Total Percent	**9%**	**10%**	**13%**	**13%**	**16%**	**17%**	**19%**	**21%**	**24%**	**24%**	**23%**

		5:00 AM	5:15 AM	5:30 AM	5:45 AM	6:00 AM	6:15 AM	6:30 AM	6:45 AM	7:00 AM	7:15 AM	7:30 AM
East Lot	Regular	38	37	67	68	82	92	120	134	147	145	148
	Handicap	4	5	7	7	8	8	11	11	11	11	11
	Subtotal	**42**	**42**	**74**	**75**	**90**	**100**	**131**	**145**	**158**	**156**	**159**

	Total Occupancy	42	42	74	75	90	100	131	145	158	156	159
	Total Percent	**6%**	**6%**	**11%**	**12%**	**14%**	**15%**	**20%**	**22%**	**24%**	**24%**	**24%**

Counts Unlimited, Inc.
PO Box 1178
Corona, CA 92878
951-268-6268

Rancho Cucamonga

Rancho Cucamonga Metrolink Statio
11208 Azusa Court, Rancho Cucamo

Tuesday, June 25th, 2024

		7:45 AM	8:00 AM	8:15 AM	8:30 AM	8:45 AM	9:00 AM	9:15 AM	9:30 AM	9:45 AM	10:00 AM	10:15 AM
West Lot	Regular	72	75	77	79	79	80	76	80	79	78	77
	Handicap	5	6	6	6	6	6	6	6	6	6	6
	Reserved	1	1	1	1	1	1	1	1	1	1	1
	Subtotal	**78**	**82**	**84**	**86**	**86**	**87**	**83**	**87**	**86**	**85**	**84**
Total Occupancy		78	82	84	86	86	87	83	87	86	85	84
Total Percent		**24%**	**25%**	**25%**	**26%**	**26%**	**26%**	**25%**	**26%**	**26%**	**26%**	**25%**

		7:45 AM	8:00 AM	8:15 AM	8:30 AM	8:45 AM	9:00 AM	9:15 AM	9:30 AM	9:45 AM	10:00 AM	10:15 AM
East Lot	Regular	149	150	149	149	150	150	148	152	154	155	158
	Handicap	11	11	11	11	11	11	11	11	11	11	11
	Subtotal	**160**	**161**	**160**	**160**	**161**	**161**	**159**	**163**	**165**	**166**	**169**
Total Occupancy		160	161	160	160	161	161	159	163	165	166	169
Total Percent		**25%**	**25%**	**25%**	**25%**	**25%**	**25%**	**24%**	**25%**	**25%**	**26%**	**26%**

Counts Unlimited, Inc.
PO Box 1178
Corona, CA 92878
951-268-6268

Rancho Cucamonga

Rancho Cucamonga Metrolink Statio
11208 Azusa Court, Rancho Cucamo

Tuesday, June 25th, 2024

		10:30 AM	10:45 AM	11:00 AM	11:15 AM	11:30 AM	11:45 AM	12:00 PM	12:15 PM	12:30 PM	12:45 PM	1:00 PM
West Lot	Regular	80	77	76	77	77	79	79	74	75	81	79
	Handicap	6	6	6	6	6	7	7	7	7	7	7
	Reserved	1	1	1	1	1	1	1	1	1	1	1
	Subtotal	**87**	**84**	**83**	**84**	**84**	**87**	**87**	**82**	**83**	**89**	**87**
Total Occupancy		87	84	83	84	84	87	87	82	83	89	87
Total Percent		**26%**	**25%**	**25%**	**25%**	**25%**	**26%**	**26%**	**25%**	**25%**	**27%**	**26%**

		10:30 AM	10:45 AM	11:00 AM	11:15 AM	11:30 AM	11:45 AM	12:00 PM	12:15 PM	12:30 PM	12:45 PM	1:00 PM
East Lot	Regular	155	153	155	153	154	157	152	148	147	153	150
	Handicap	11	11	11	11	11	11	11	11	11	11	11
	Subtotal	**166**	**164**	**166**	**164**	**165**	**168**	**163**	**159**	**158**	**164**	**161**
Total Occupancy		166	164	166	164	165	168	163	159	158	164	161
Total Percent		**26%**	**25%**	**26%**	**25%**	**25%**	**26%**	**25%**	**24%**	**24%**	**25%**	**25%**

Counts Unlimited, Inc.
PO Box 1178
Corona, CA 92878
951-268-6268

Rancho Cucamonga

Rancho Cucamonga Metrolink Statio
11208 Azusa Court, Rancho Cucamo

Tuesday, June 25th, 2024

		1:15 PM	1:30 PM	1:45 PM	2:00 PM	2:15 PM	2:30 PM	2:45 PM	3:00 PM	3:15 PM	3:30 PM	3:45 PM
West Lot	Regular	77	79	79	77	78	78	78	78	78	78	82
	Handicap	7	7	7	6	6	6	6	6	6	6	6
	Reserved	1	1	1	1	1	1	1	1	1	1	1
	Subtotal	**85**	**87**	**87**	**84**	**85**	**85**	**85**	**85**	**85**	**85**	**89**
Total Occupancy		85	87	87	84	85	85	85	85	85	85	89
Total Percent		**26%**	**26%**	**26%**	**25%**	**26%**	**26%**	**26%**	**26%**	**26%**	**26%**	**27%**

		1:15 PM	1:30 PM	1:45 PM	2:00 PM	2:15 PM	2:30 PM	2:45 PM	3:00 PM	3:15 PM	3:30 PM	3:45 PM
East Lot	Regular	150	152	155	154	155	155	153	155	153	152	152
	Handicap	11	11	11	11	11	11	11	11	11	11	11
	Subtotal	**161**	**163**	**166**	**165**	**166**	**166**	**164**	**166**	**164**	**163**	**163**
Total Occupancy		161	163	166	165	166	166	164	166	164	163	163
Total Percent		**25%**	**25%**	**26%**	**25%**	**26%**	**26%**	**25%**	**26%**	**25%**	**25%**	**25%**

Counts Unlimited, Inc.
PO Box 1178
Corona, CA 92878
951-268-6268

Rancho Cucamonga

Rancho Cucamonga Metrolink Stati

11208 Azusa Court, Rancho Cucamo

Tuesday, June 25th, 2024

		4:00 PM	4:15 PM	4:30 PM	4:45 PM	5:00 PM	5:15 PM	5:30 PM	5:45 PM	6:00 PM	6:15 PM	6:30 PM
West Lot	Regular	73	73	73	72	66	53	50	48	32	27	29
	Handicap	6	6	6	6	3	3	3	3	2	2	2
	Reserved	1	1	1	1	1	1	1	1	1	1	1
	Subtotal	**80**	**80**	**80**	**79**	**70**	**57**	**54**	**52**	**35**	**30**	**32**
Total Occupancy		80	80	80	79	70	57	54	52	35	30	32
Total Percent		**24%**	**24%**	**24%**	**24%**	**21%**	**17%**	**16%**	**16%**	**11%**	**9%**	**10%**

		4:00 PM	4:15 PM	4:30 PM	4:45 PM	5:00 PM	5:15 PM	5:30 PM	5:45 PM	6:00 PM	6:15 PM	6:30 PM
East Lot	Regular	135	136	136	137	117	105	100	100	79	66	69
	Handicap	9	9	9	9	8	8	8	8	4	4	4
	Subtotal	**144**	**145**	**145**	**146**	**125**	**113**	**108**	**108**	**83**	**70**	**73**
Total Occupancy		144	145	145	146	125	113	108	108	83	70	73
Total Percent		**22%**	**22%**	**22%**	**22%**	**19%**	**17%**	**17%**	**17%**	**13%**	**11%**	**11%**

Counts Unlimited, Inc.
PO Box 1178
Corona, CA 92878
951-268-6268

Rancho Cucamonga

Rancho Cucamonga Metrolink Statio
11208 Azusa Court, Rancho Cucamo

Tuesday, June 25th, 2024

		6:45 PM	7:00 PM	7:15 PM	7:30 PM	7:45 PM	8:00 PM	8:15 PM	8:30 PM	8:45 PM	9:00 PM	9:15 PM
West Lot	Regular	12	10	9	8	8	5	5	5	6	4	4
	Handicap	1	1	1	1	1	1	1	1	1	1	1
	Reserved	1	0	0	0	0	0	0	0	0	0	0
	Subtotal	**14**	**11**	**10**	**9**	**9**	**6**	**6**	**6**	**7**	**5**	**5**
Total Occupancy		14	11	10	9	9	6	6	6	7	5	5
Total Percent		**4%**	**3%**	**3%**	**3%**	**3%**	**2%**	**2%**	**2%**	**2%**	**2%**	**2%**

		6:45 PM	7:00 PM	7:15 PM	7:30 PM	7:45 PM	8:00 PM	8:15 PM	8:30 PM	8:45 PM	9:00 PM	9:15 PM
East Lot	Regular	32	27	21	24	24	12	12	12	12	9	9
	Handicap	2	2	2	1	1	0	0	0	0	0	0
	Subtotal	**34**	**29**	**23**	**25**	**25**	**12**	**12**	**12**	**12**	**9**	**9**
Total Occupancy		34	29	23	25	25	12	12	12	12	9	9
Total Percent		**5%**	**4%**	**4%**	**4%**	**4%**	**2%**	**2%**	**2%**	**2%**	**1%**	**1%**

Counts Unlimited, Inc.
PO Box 1178
Corona, CA 92878
951-268-6268

Rancho Cucamonga

Rancho Cucamonga Metrolink Statio
11208 Azusa Court, Rancho Cucamo

Tuesday, June 25th, 2024

		9:30 PM	9:45 PM	10:00 PM	10:15 PM	10:30 PM	10:45 PM	11:00 PM	11:15 PM	11:30 PM	11:45 PM	12:00 AM
West Lot	Regular	4	4	2	2	2	3	2	2	2	2	1
	Handicap	1	1	1	1	1	1	1	1	1	1	1
	Reserved	0	0	0	0	0	0	0	0	0	0	0
	Subtotal	**5**	**5**	**3**	**3**	**3**	**4**	**3**	**3**	**3**	**3**	**2**
Total Occupancy		5	5	3	3	3	4	3	3	3	3	2
Total Percent		**2%**	**2%**	**1%**	**1%**	**1%**	**1%**	**1%**	**1%**	**1%**	**1%**	**1%**

		9:30 PM	9:45 PM	10:00 PM	10:15 PM	10:30 PM	10:45 PM	11:00 PM	11:15 PM	11:30 PM	11:45 PM	12:00 AM
East Lot	Regular	9	9	4	4	4	4	5	4	4	4	4
	Handicap	0	0	0	0	0	0	0	0	0	0	0
	Subtotal	**9**	**9**	**4**	**4**	**4**	**4**	**5**	**4**	**4**	**4**	**4**
Total Occupancy		9	9	4	4	4	4	5	4	4	4	4
Total Percent		**1%**	**1%**	**1%**	**1%**	**1%**	**1%**	**1%**	**1%**	**1%**	**1%**	**1%**

Counts Unlimited, Inc.
PO Box 1178
Corona, CA 92878
951-268-6268

Rancho Cucamonga

Rancho Cucamonga Metrolink Station

11208 Azusa Court, Rancho Cucamonga, CA 91730

Wednesday, June 26th, 2024

		Inventory	12:00 AM	12:15 AM	12:30 AM	12:45 AM	1:00 AM	1:15 AM	1:30 AM	1:45 AM	2:00 AM
West Lot	Regular	317	1	1	1	1	1	1	1	1	1
	Handicap	12	1	1	1	1	0	0	0	0	0
	Reserved	1	0	0	0	0	0	0	0	0	0
	Subtotal	**330**	**2**	**2**	**2**	**2**	**1**	**1**	**1**	**1**	**1**
Total Occupancy		330	2	2	2	2	1	1	1	1	1
Total Percent			**1%**	**1%**	**1%**	**1%**	**0%**	**0%**	**0%**	**0%**	**0%**

		Inventory	12:00 AM	12:15 AM	12:30 AM	12:45 AM	1:00 AM	1:15 AM	1:30 AM	1:45 AM	2:00 AM
East Lot	Regular	639	4	4	4	5	5	5	5	5	5
	Handicap	11	0	0	0	0	0	0	0	0	0
	Subtotal	**650**	**4**	**4**	**4**	**5**	**5**	**5**	**5**	**5**	**5**
Total Occupancy		650	4	4	4	5	5	5	5	5	5
Total Percent			**1%**	**1%**	**1%**	**1%**	**1%**	**1%**	**1%**	**1%**	**1%**

Counts Unlimited, Inc.
PO Box 1178
Corona, CA 92878
951-268-6268

Rancho Cucamonga

Rancho Cucamonga Metrolink Statio
11208 Azusa Court, Rancho Cucamo

Wednesday, June 26th, 2024

		2:15 AM	2:30 AM	2:45 AM	3:00 AM	3:15 AM	3:30 AM	3:45 AM	4:00 AM	4:15 AM	4:30 AM	4:45 AM
West Lot	Regular	1	1	1	1	1	1	2	2	13	13	23
	Handicap	0	0	0	0	0	0	0	0	2	2	3
	Reserved	0	0	0	0	0	0	0	0	0	0	0
	Subtotal	**1**	**1**	**1**	**1**	**1**	**1**	**2**	**2**	**15**	**15**	**26**
Total Occupancy		1	1	1	1	1	1	2	2	15	15	26
Total Percent		**0%**	**0%**	**0%**	**0%**	**0%**	**0%**	**1%**	**1%**	**5%**	**5%**	**8%**

		2:15 AM	2:30 AM	2:45 AM	3:00 AM	3:15 AM	3:30 AM	3:45 AM	4:00 AM	4:15 AM	4:30 AM	4:45 AM
East Lot	Regular	5	4	4	4	4	5	10	14	18	21	32
	Handicap	0	0	0	0	0	0	1	1	3	3	4
	Subtotal	**5**	**4**	**4**	**4**	**4**	**5**	**11**	**15**	**21**	**24**	**36**
Total Occupancy		5	4	4	4	4	5	11	15	21	24	36
Total Percent		**1%**	**1%**	**1%**	**1%**	**1%**	**1%**	**2%**	**2%**	**3%**	**4%**	**6%**

Counts Unlimited, Inc.
PO Box 1178
Corona, CA 92878
951-268-6268

Rancho Cucamonga

Rancho Cucamonga Metrolink Statio
11208 Azusa Court, Rancho Cucamo

Wednesday, June 26th, 2024

		5:00 AM	5:15 AM	5:30 AM	5:45 AM	6:00 AM	6:15 AM	6:30 AM	6:45 AM	7:00 AM	7:15 AM	7:30 AM
West Lot	Regular	23	28	31	37	38	47	59	62	72	68	67
	Handicap	3	4	4	4	4	4	4	4	4	4	5
	Reserved	0	1	1	1	1	1	1	1	1	1	1
	Subtotal	**26**	**33**	**36**	**42**	**43**	**52**	**64**	**67**	**77**	**73**	**73**

Total Occupancy		26	33	36	42	43	52	64	67	77	73	73
Total Percent		**8%**	**10%**	**11%**	**13%**	**13%**	**16%**	**19%**	**20%**	**23%**	**22%**	**22%**

		5:00 AM	5:15 AM	5:30 AM	5:45 AM	6:00 AM	6:15 AM	6:30 AM	6:45 AM	7:00 AM	7:15 AM	7:30 AM
East Lot	Regular	33	38	46	55	70	75	111	125	134	135	138
	Handicap	4	5	7	7	7	7	11	11	11	11	11
	Subtotal	**37**	**43**	**53**	**62**	**77**	**82**	**122**	**136**	**145**	**146**	**149**

Total Occupancy		37	43	53	62	77	82	122	136	145	146	149
Total Percent		**6%**	**7%**	**8%**	**10%**	**12%**	**13%**	**19%**	**21%**	**22%**	**22%**	**23%**

Counts Unlimited, Inc.
PO Box 1178
Corona, CA 92878
951-268-6268

Rancho Cucamonga

Rancho Cucamonga Metrolink Statio
11208 Azusa Court, Rancho Cucamo

Wednesday, June 26th, 2024

		7:45 AM	8:00 AM	8:15 AM	8:30 AM	8:45 AM	9:00 AM	9:15 AM	9:30 AM	9:45 AM	10:00 AM	10:15 AM
West Lot	Regular	68	73	69	70	68	70	70	70	70	72	71
	Handicap	5	5	5	5	7	7	7	7	7	7	7
	Reserved	1	1	1	1	1	1	1	1	1	1	1
	Subtotal	**74**	**79**	**75**	**76**	**76**	**78**	**78**	**78**	**78**	**80**	**79**

	Total Occupancy	74	79	75	76	76	78	78	78	78	80	79
	Total Percent	**22%**	**24%**	**23%**	**23%**	**23%**	**24%**	**24%**	**24%**	**24%**	**24%**	**24%**

		7:45 AM	8:00 AM	8:15 AM	8:30 AM	8:45 AM	9:00 AM	9:15 AM	9:30 AM	9:45 AM	10:00 AM	10:15 AM
East Lot	Regular	137	138	138	139	143	145	148	148	148	144	146
	Handicap	11	11	11	11	11	11	11	11	10	10	11
	Subtotal	**148**	**149**	**149**	**150**	**154**	**156**	**159**	**159**	**158**	**154**	**157**

	Total Occupancy	148	149	149	150	154	156	159	159	158	154	157
	Total Percent	**23%**	**23%**	**23%**	**23%**	**24%**	**24%**	**24%**	**24%**	**24%**	**24%**	**24%**

Counts Unlimited, Inc.
PO Box 1178
Corona, CA 92878
951-268-6268

Rancho Cucamonga

Rancho Cucamonga Metrolink Statio
11208 Azusa Court, Rancho Cucamo

Wednesday, June 26th, 2024

		10:30 AM	10:45 AM	11:00 AM	11:15 AM	11:30 AM	11:45 AM	12:00 PM	12:15 PM	12:30 PM	12:45 PM	1:00 PM
West Lot	Regular	70	74	71	72	74	69	73	72	72	71	72
	Handicap	7	7	7	8	7	7	8	8	8	8	7
	Reserved	1	1	1	1	1	1	1	1	1	1	1
	Subtotal	**78**	**82**	**79**	**81**	**82**	**77**	**82**	**81**	**81**	**80**	**80**
Total Occupancy		78	82	79	81	82	77	82	81	81	80	80
Total Percent		**24%**	**25%**	**24%**	**25%**	**25%**	**23%**	**25%**	**25%**	**25%**	**24%**	**24%**

		10:30 AM	10:45 AM	11:00 AM	11:15 AM	11:30 AM	11:45 AM	12:00 PM	12:15 PM	12:30 PM	12:45 PM	1:00 PM
East Lot	Regular	147	150	146	150	153	148	148	148	146	146	146
	Handicap	11	11	11	11	11	11	11	11	11	11	11
	Subtotal	**158**	**161**	**157**	**161**	**164**	**159**	**159**	**159**	**157**	**157**	**157**
Total Occupancy		158	161	157	161	164	159	159	159	157	157	157
Total Percent		**24%**	**25%**	**24%**	**25%**	**25%**	**24%**	**24%**	**24%**	**24%**	**24%**	**24%**

Counts Unlimited, Inc.
PO Box 1178
Corona, CA 92878
951-268-6268

Rancho Cucamonga

Rancho Cucamonga Metrolink Statio
11208 Azusa Court, Rancho Cucamo

Wednesday, June 26th, 2024

		1:15 PM	1:30 PM	1:45 PM	2:00 PM	2:15 PM	2:30 PM	2:45 PM	3:00 PM	3:15 PM	3:30 PM	3:45 PM
West Lot	Regular	72	72	71	69	69	69	68	68	67	67	69
	Handicap	7	7	7	7	7	7	7	7	7	7	7
	Reserved	1	1	1	1	1	1	1	1	1	1	1
	Subtotal	**80**	**80**	**79**	**77**	**77**	**77**	**76**	**76**	**75**	**75**	**77**
Total Occupancy		80	80	79	77	77	77	76	76	75	75	77
Total Percent		**24%**	**24%**	**24%**	**23%**	**23%**	**23%**	**23%**	**23%**	**23%**	**23%**	**23%**

		1:15 PM	1:30 PM	1:45 PM	2:00 PM	2:15 PM	2:30 PM	2:45 PM	3:00 PM	3:15 PM	3:30 PM	3:45 PM
East Lot	Regular	146	142	141	140	138	140	141	141	140	136	138
	Handicap	11	11	11	11	11	11	11	11	11	11	11
	Subtotal	**157**	**153**	**152**	**151**	**149**	**151**	**152**	**152**	**151**	**147**	**149**
Total Occupancy		157	153	152	151	149	151	152	152	151	147	149
Total Percent		**24%**	**24%**	**23%**	**23%**	**23%**	**23%**	**23%**	**23%**	**23%**	**23%**	**23%**

Counts Unlimited, Inc.
PO Box 1178
Corona, CA 92878
951-268-6268

Rancho Cucamonga

Rancho Cucamonga Metrolink Statio
11208 Azusa Court, Rancho Cucamo

Wednesday, June 26th, 2024

		4:00 PM	4:15 PM	4:30 PM	4:45 PM	5:00 PM	5:15 PM	5:30 PM	5:45 PM	6:00 PM	6:15 PM	6:30 PM
West Lot	Regular	63	61	61	63	52	46	41	44	25	21	24
	Handicap	6	6	6	6	6	6	7	7	3	3	3
	Reserved	0	0	1	1	1	1	1	1	1	1	1
	Subtotal	**69**	**67**	**68**	**70**	**59**	**53**	**49**	**52**	**29**	**25**	**28**

	Total Occupancy	69	67	68	70	59	53	49	52	29	25	28
	Total Percent	**21%**	**20%**	**21%**	**21%**	**18%**	**16%**	**15%**	**16%**	**9%**	**8%**	**8%**

		4:00 PM	4:15 PM	4:30 PM	4:45 PM	5:00 PM	5:15 PM	5:30 PM	5:45 PM	6:00 PM	6:15 PM	6:30 PM
East Lot	Regular	122	125	127	127	113	105	99	103	82	80	74
	Handicap	11	11	10	10	10	10	10	10	5	5	5
	Subtotal	**133**	**136**	**137**	**137**	**123**	**115**	**109**	**113**	**87**	**85**	**79**

	Total Occupancy	133	136	137	137	123	115	109	113	87	85	79
	Total Percent	**20%**	**21%**	**21%**	**21%**	**19%**	**18%**	**17%**	**17%**	**13%**	**13%**	**12%**

Counts Unlimited, Inc.
PO Box 1178
Corona, CA 92878
951-268-6268

Rancho Cucamonga

Rancho Cucamonga Metrolink Statio
11208 Azusa Court, Rancho Cucamo

Wednesday, June 26th, 2024

		6:45 PM	7:00 PM	7:15 PM	7:30 PM	7:45 PM	8:00 PM	8:15 PM	8:30 PM	8:45 PM	9:00 PM	9:15 PM
West Lot	Regular	14	9	8	7	8	6	6	6	6	6	6
	Handicap	2	2	2	1	1	1	1	1	1	1	1
	Reserved	0	0	0	0	0	0	0	0	0	0	0
	Subtotal	**16**	**11**	**10**	**8**	**9**	**7**	**7**	**7**	**7**	**7**	**7**
Total Occupancy		16	11	10	8	9	7	7	7	7	7	7
Total Percent		**5%**	**3%**	**3%**	**2%**	**3%**	**2%**	**2%**	**2%**	**2%**	**2%**	**2%**

		6:45 PM	7:00 PM	7:15 PM	7:30 PM	7:45 PM	8:00 PM	8:15 PM	8:30 PM	8:45 PM	9:00 PM	9:15 PM
East Lot	Regular	33	30	25	24	23	13	12	12	12	11	11
	Handicap	1	1	3	1	1	1	1	1	1	0	0
	Subtotal	**34**	**31**	**28**	**25**	**24**	**14**	**13**	**13**	**13**	**11**	**11**
Total Occupancy		34	31	28	25	24	14	13	13	13	11	11
Total Percent		**5%**	**5%**	**4%**	**4%**	**4%**	**2%**	**2%**	**2%**	**2%**	**2%**	**2%**

Counts Unlimited, Inc.
PO Box 1178
Corona, CA 92878
951-268-6268

Rancho Cucamonga

Rancho Cucamonga Metrolink Statio
11208 Azusa Court, Rancho Cucamo

Wednesday, June 26th, 2024

		9:30 PM	9:45 PM	10:00 PM	10:15 PM	10:30 PM	10:45 PM	11:00 PM	11:15 PM	11:30 PM	11:45 PM	12:00 AM
West Lot	Regular	6	5	3	3	4	3	2	2	2	2	2
	Handicap	1	1	1	1	1	1	1	1	1	1	1
	Reserved	0	0	0	0	0	0	0	0	0	0	0
	Subtotal	**7**	**6**	**4**	**4**	**5**	**4**	**3**	**3**	**3**	**3**	**3**
Total Occupancy		7	6	4	4	5	4	3	3	3	3	3
Total Percent		**2%**	**2%**	**1%**	**1%**	**2%**	**1%**	**1%**	**1%**	**1%**	**1%**	**1%**

		9:30 PM	9:45 PM	10:00 PM	10:15 PM	10:30 PM	10:45 PM	11:00 PM	11:15 PM	11:30 PM	11:45 PM	12:00 AM
East Lot	Regular	10	13	9	9	10	6	7	7	7	7	7
	Handicap	0	0	0	0	0	0	0	0	0	0	0
	Subtotal	**10**	**13**	**9**	**9**	**10**	**6**	**7**	**7**	**7**	**7**	**7**
Total Occupancy		10	13	9	9	10	6	7	7	7	7	7
Total Percent		**2%**	**2%**	**1%**	**1%**	**2%**	**1%**	**1%**	**1%**	**1%**	**1%**	**1%**

Counts Unlimited, Inc.
PO Box 1178
Corona, CA 92878
951-268-6268

Rancho Cucamonga

Rancho Cucamonga Metrolink Station

11208 Azusa Court, Rancho Cucamonga, CA 91730

Saturday, June 29th, 2024

		Inventory	12:00 AM	12:15 AM	12:30 AM	12:45 AM	1:00 AM	1:15 AM	1:30 AM	1:45 AM	2:00 AM
West Lot	Regular	317	3	3	3	2	2	2	2	2	2
	Handicap	12	0	0	0	0	0	0	0	0	0
	Reserved	1	0	0	0	0	0	0	0	0	0
	Subtotal	**330**	**3**	**3**	**3**	**2**	**2**	**2**	**2**	**2**	**2**
Total Occupancy		330	3	3	3	2	2	2	2	2	2
Total Percent			**1%**	**1%**	**1%**	**1%**	**1%**	**1%**	**1%**	**1%**	**1%**

		Inventory	12:00 AM	12:15 AM	12:30 AM	12:45 AM	1:00 AM	1:15 AM	1:30 AM	1:45 AM	2:00 AM
East Lot	Regular	639	6	6	6	7	7	7	7	7	7
	Handicap	11	0	0	0	0	0	0	0	0	0
	Subtotal	**650**	**6**	**6**	**6**	**7**	**7**	**7**	**7**	**7**	**7**
Total Occupancy		650	6	6	6	7	7	7	7	7	7
Total Percent			**1%**	**1%**	**1%**	**1%**	**1%**	**1%**	**1%**	**1%**	**1%**

Counts Unlimited, Inc.
PO Box 1178
Corona, CA 92878
951-268-6268

Rancho Cucamonga

Rancho Cucamonga Metrolink Statio
11208 Azusa Court, Rancho Cucam

Saturday, June 29th, 2024

		2:15 AM	2:30 AM	2:45 AM	3:00 AM	3:15 AM	3:30 AM	3:45 AM	4:00 AM	4:15 AM	4:30 AM	4:45 AM
West Lot	Regular	2	2	2	2	2	2	2	2	2	2	2
	Handicap	0	0	0	0	0	0	0	0	0	0	0
	Reserved	0	0	0	0	0	0	0	0	0	0	0
	Subtotal	**2**	**2**	**2**	**2**	**2**	**2**	**2**	**2**	**2**	**2**	**2**
Total Occupancy		2	2	2	2	2	2	2	2	2	2	2
Total Percent		**1%**	**1%**	**1%**	**1%**	**1%**	**1%**	**1%**	**1%**	**1%**	**1%**	**1%**

		2:15 AM	2:30 AM	2:45 AM	3:00 AM	3:15 AM	3:30 AM	3:45 AM	4:00 AM	4:15 AM	4:30 AM	4:45 AM
East Lot	Regular	7	7	7	7	7	7	7	7	7	7	7
	Handicap	0	0	0	0	0	0	0	0	0	0	0
	Subtotal	**7**	**7**	**7**	**7**	**7**	**7**	**7**	**7**	**7**	**7**	**7**
Total Occupancy		7	7	7	7	7	7	7	7	7	7	7
Total Percent		**1%**	**1%**	**1%**	**1%**	**1%**	**1%**	**1%**	**1%**	**1%**	**1%**	**1%**

Counts Unlimited, Inc.
PO Box 1178
Corona, CA 92878
951-268-6268

Rancho Cucamonga

Rancho Cucamonga Metrolink Statio
11208 Azusa Court, Rancho Cucam

Saturday, June 29th, 2024

		5:00 AM	5:15 AM	5:30 AM	5:45 AM	6:00 AM	6:15 AM	6:30 AM	6:45 AM	7:00 AM	7:15 AM	7:30 AM
West Lot	Regular	2	2	2	2	2	3	3	3	3	3	3
	Handicap	0	0	0	0	0	0	0	0	0	0	0
	Reserved	0	0	0	0	0	0	0	0	0	0	0
	Subtotal	**2**	**2**	**2**	**2**	**2**	**3**	**3**	**3**	**3**	**3**	**3**
Total Occupancy		2	2	2	2	2	3	3	3	3	3	3
Total Percent		**1%**	**1%**	**1%**	**1%**	**1%**	**1%**	**1%**	**1%**	**1%**	**1%**	**1%**

		5:00 AM	5:15 AM	5:30 AM	5:45 AM	6:00 AM	6:15 AM	6:30 AM	6:45 AM	7:00 AM	7:15 AM	7:30 AM
East Lot	Regular	7	8	9	9	8	8	8	8	8	8	8
	Handicap	0	0	0	0	0	0	0	0	0	0	0
	Subtotal	**7**	**8**	**9**	**9**	**8**	**8**	**8**	**8**	**8**	**8**	**8**
Total Occupancy		7	8	9	9	8	8	8	8	8	8	8
Total Percent		**1%**	**1%**	**1%**	**1%**	**1%**	**1%**	**1%**	**1%**	**1%**	**1%**	**1%**

Counts Unlimited, Inc.
PO Box 1178
Corona, CA 92878
951-268-6268

Rancho Cucamonga

Rancho Cucamonga Metrolink Statio
11208 Azusa Court, Rancho Cucam

Saturday, June 29th, 2024

		7:45 AM	8:00 AM	8:15 AM	8:30 AM	8:45 AM	9:00 AM	9:15 AM	9:30 AM	9:45 AM	10:00 AM	10:15 AM
West Lot	Regular	3	3	3	3	4	4	3	3	3	3	3
	Handicap	0	0	0	0	0	0	0	0	0	0	0
	Reserved	0	0	0	0	0	0	0	0	0	0	0
	Subtotal	**3**	**3**	**3**	**3**	**4**	**4**	**3**	**3**	**3**	**3**	**3**
Total Occupancy		3	3	3	3	4	4	3	3	3	3	3
Total Percent		**1%**	**1%**	**1%**	**1%**	**1%**	**1%**	**1%**	**1%**	**1%**	**1%**	**1%**

		7:45 AM	8:00 AM	8:15 AM	8:30 AM	8:45 AM	9:00 AM	9:15 AM	9:30 AM	9:45 AM	10:00 AM	10:15 AM
East Lot	Regular	8	8	8	9	10	9	8	8	7	6	6
	Handicap	0	0	0	0	0	0	0	0	0	0	0
	Subtotal	**8**	**8**	**8**	**9**	**10**	**9**	**8**	**8**	**7**	**6**	**6**
Total Occupancy		8	8	8	9	10	9	8	8	7	6	6
Total Percent		**1%**	**1%**	**1%**	**1%**	**2%**	**1%**	**1%**	**1%**	**1%**	**1%**	**1%**

Counts Unlimited, Inc.
PO Box 1178
Corona, CA 92878
951-268-6268

Rancho Cucamonga

Rancho Cucamonga Metrolink Statio

11208 Azusa Court, Rancho Cucam

Saturday, June 29th, 2024

		10:30 AM	10:45 AM	11:00 AM	11:15 AM	11:30 AM	11:45 AM	12:00 PM	12:15 PM	12:30 PM	12:45 PM	1:00 PM
West Lot	Regular	3	3	3	3	3	3	3	3	3	3	3
	Handicap	0	0	0	0	0	0	0	0	0	0	0
	Reserved	0	0	0	0	0	0	0	0	0	0	0
	Subtotal	**3**	**3**	**3**	**3**	**3**	**3**	**3**	**3**	**3**	**3**	**3**
Total Occupancy		3	3	3	3	3	3	3	3	3	3	3
Total Percent		**1%**	**1%**	**1%**	**1%**	**1%**	**1%**	**1%**	**1%**	**1%**	**1%**	**1%**

		10:30 AM	10:45 AM	11:00 AM	11:15 AM	11:30 AM	11:45 AM	12:00 PM	12:15 PM	12:30 PM	12:45 PM	1:00 PM
East Lot	Regular	6	6	6	6	6	6	8	6	8	8	6
	Handicap	0	0	0	0	0	0	0	0	0	0	0
	Subtotal	**6**	**6**	**6**	**6**	**6**	**6**	**8**	**6**	**8**	**8**	**6**
Total Occupancy		6	6	6	6	6	6	8	6	8	8	6
Total Percent		**1%**	**1%**	**1%**	**1%**	**1%**	**1%**	**1%**	**1%**	**1%**	**1%**	**1%**

Counts Unlimited, Inc.
PO Box 1178
Corona, CA 92878
951-268-6268

Rancho Cucamonga

Rancho Cucamonga Metrolink Statio
11208 Azusa Court, Rancho Cucam

Saturday, June 29th, 2024

		1:15 PM	1:30 PM	1:45 PM	2:00 PM	2:15 PM	2:30 PM	2:45 PM	3:00 PM	3:15 PM	3:30 PM	3:45 PM
West Lot	Regular	4	4	4	4	4	4	4	3	3	3	3
	Handicap	0	0	0	0	0	0	0	0	0	0	0
	Reserved	0	0	0	0	0	0	0	0	0	0	0
	Subtotal	**4**	**4**	**4**	**4**	**4**	**4**	**4**	**3**	**3**	**3**	**3**
Total Occupancy		4	4	4	4	4	4	4	3	3	3	3
Total Percent		**1%**	**1%**	**1%**	**1%**	**1%**	**1%**	**1%**	**1%**	**1%**	**1%**	**1%**

		1:15 PM	1:30 PM	1:45 PM	2:00 PM	2:15 PM	2:30 PM	2:45 PM	3:00 PM	3:15 PM	3:30 PM	3:45 PM
East Lot	Regular	5	6	7	7	7	7	6	6	6	5	5
	Handicap	0	0	0	0	0	0	0	0	0	0	0
	Subtotal	**5**	**6**	**7**	**7**	**7**	**7**	**6**	**6**	**6**	**5**	**5**
Total Occupancy		5	6	7	7	7	7	6	6	6	5	5
Total Percent		**1%**	**1%**	**1%**	**1%**	**1%**	**1%**	**1%**	**1%**	**1%**	**1%**	**1%**

Counts Unlimited, Inc.
PO Box 1178
Corona, CA 92878
951-268-6268

Rancho Cucamonga

Rancho Cucamonga Metrolink Statio
11208 Azusa Court, Rancho Cucam

Saturday, June 29th, 2024

		4:00 PM	4:15 PM	4:30 PM	4:45 PM	5:00 PM	5:15 PM	5:30 PM	5:45 PM	6:00 PM	6:15 PM	6:30 PM
West Lot	Regular	3	3	3	3	3	3	3	3	3	3	3
	Handicap	0	0	0	0	0	0	0	0	0	0	0
	Reserved	0	0	0	0	0	0	0	0	0	0	0
	Subtotal	**3**	**3**	**3**	**3**	**3**	**3**	**3**	**3**	**3**	**3**	**3**
Total Occupancy		3	3	3	3	3	3	3	3	3	3	3
Total Percent		**1%**	**1%**	**1%**	**1%**	**1%**	**1%**	**1%**	**1%**	**1%**	**1%**	**1%**

		4:00 PM	4:15 PM	4:30 PM	4:45 PM	5:00 PM	5:15 PM	5:30 PM	5:45 PM	6:00 PM	6:15 PM	6:30 PM
East Lot	Regular	5	5	5	5	5	5	5	5	6	6	5
	Handicap	0	0	0	0	0	0	0	0	0	0	0
	Subtotal	**5**	**5**	**5**	**5**	**5**	**5**	**5**	**5**	**6**	**6**	**5**
Total Occupancy		5	5	5	5	5	5	5	5	6	6	5
Total Percent		**1%**	**1%**	**1%**	**1%**	**1%**	**1%**	**1%**	**1%**	**1%**	**1%**	**1%**

Counts Unlimited, Inc.
PO Box 1178
Corona, CA 92878
951-268-6268

Rancho Cucamonga

Rancho Cucamonga Metrolink Statio
11208 Azusa Court, Rancho Cucam

Saturday, June 29th, 2024

		6:45 PM	7:00 PM	7:15 PM	7:30 PM	7:45 PM	8:00 PM	8:15 PM	8:30 PM	8:45 PM	9:00 PM	9:15 PM
West Lot	Regular	3	3	3	3	3	2	2	2	2	2	2
	Handicap	0	0	0	0	0	0	0	0	0	0	0
	Reserved	0	0	0	0	0	0	0	0	0	0	0
	Subtotal	**3**	**3**	**3**	**3**	**3**	**2**	**2**	**2**	**2**	**2**	**2**
Total Occupancy		3	3	3	3	3	2	2	2	2	2	2
Total Percent		**1%**	**1%**	**1%**	**1%**	**1%**	**1%**	**1%**	**1%**	**1%**	**1%**	**1%**

		6:45 PM	7:00 PM	7:15 PM	7:30 PM	7:45 PM	8:00 PM	8:15 PM	8:30 PM	8:45 PM	9:00 PM	9:15 PM
East Lot	Regular	5	5	5	5	5	5	6	6	6	6	6
	Handicap	0	0	0	0	0	0	0	0	0	0	0
	Subtotal	**5**	**5**	**5**	**5**	**5**	**5**	**6**	**6**	**6**	**6**	**6**
Total Occupancy		5	5	5	5	5	5	6	6	6	6	6
Total Percent		**1%**	**1%**	**1%**	**1%**	**1%**	**1%**	**1%**	**1%**	**1%**	**1%**	**1%**

Counts Unlimited, Inc.
PO Box 1178
Corona, CA 92878
951-268-6268

Rancho Cucamonga

Rancho Cucamonga Metrolink Stati

11208 Azusa Court, Rancho Cucam

Saturday, June 29th, 2024

		9:30 PM	9:45 PM	10:00 PM	10:15 PM	10:30 PM	10:45 PM	11:00 PM	11:15 PM	11:30 PM	11:45 PM	12:00 AM
West Lot	Regular	2	2	2	2	2	2	2	2	2	2	3
	Handicap	0	0	0	0	0	0	0	0	0	0	0
	Reserved	0	0	0	0	0	0	0	0	0	0	0
	Subtotal	**2**	**2**	**2**	**2**	**2**	**2**	**2**	**2**	**2**	**2**	**3**
Total Occupancy		2	2	2	2	2	2	2	2	2	2	3
Total Percent		**1%**	**1%**	**1%**	**1%**	**1%**	**1%**	**1%**	**1%**	**1%**	**1%**	**1%**

		9:30 PM	9:45 PM	10:00 PM	10:15 PM	10:30 PM	10:45 PM	11:00 PM	11:15 PM	11:30 PM	11:45 PM	12:00 AM
East Lot	Regular	6	6	6	6	5	5	6	5	5	5	5
	Handicap	0	0	0	0	0	0	0	0	0	0	0
	Subtotal	**6**	**6**	**6**	**6**	**5**	**5**	**6**	**5**	**5**	**5**	**5**
Total Occupancy		6	6	6	6	5	5	6	5	5	5	5
Total Percent		**1%**	**1%**	**1%**	**1%**	**1%**	**1%**	**1%**	**1%**	**1%**	**1%**	**1%**

Counts Unlimited, Inc.
PO Box 1178
Corona, CA 92878
951-268-6268

APPENDIX G2

		Lot 2 Prem Occ	Lot 2 Prem Cap	Lot 2 Prem%	Lot 2 Gen Occ	Lot 2 Gen Capacity	Lot 2 %	Lot 3 Occ	Lot 3 Cap	Lot 3%	Lot 4 Prem Occ	Lot 4 Prem Cap	Lot 4 Prem %	Lot 4 Gen Occ	Lot 4 Gen Cap	Lot 4 Gen%	Lot 5 Occ	Lot 5 Cap	Lot 5%	Lot 6 Occ	Lot 6 Cap	Lot 6%
Saturday	6/1/2024	202	347	58.21%	851	1234	68.96%	699	1192	58.64%	334	352	94.89%	763	1430	53.36%	910	2316	39.29%	557	1337	41.66%
Sunday	6/2/2024	188	347	54.18%	780	1234	63.21%	570	1192	47.82%	324	352	92.05%	680	1430	47.55%	825	2316	35.62%	555	1337	41.51%
Monday	6/3/2024	230	347	66.28%	808	1234	65.48%	648	1192	54.36%	337	352	95.74%	911	1430	63.71%	861	2316	37.18%	588	1337	43.98%
Tuesday	6/4/2024	257	347	74.06%	834	1234	67.59%	646	1192	54.19%	338	352	96.02%	1129	1430	78.95%	841	2316	36.31%	624	1337	46.67%
Wednesday	6/5/2024	278	347	80.12%	844	1234	68.40%	689	1192	57.80%	340	352	96.59%	1221	1430	85.38%	888	2316	38.34%	643	1337	48.09%
Thursday	6/6/2024	273	347	78.67%	901	1234	73.01%	761	1192	63.84%	339	352	96.31%	1149	1430	80.35%	923	2316	39.85%	687	1337	51.38%
Friday	6/7/2024	243	347	70.03%	1058	1234	85.74%	829	1192	69.55%	337	352	95.74%	1059	1430	74.06%	1002	2316	43.26%	702	1337	52.51%
Saturday	6/8/2024	239	347	68.88%	1033	1234	83.71%	849	1192	71.22%	326	352	92.61%	924	1430	64.62%	995	2316	42.96%	712	1337	53.25%
Sunday	6/9/2024	218	347	62.82%	915	1234	74.15%	838	1192	70.30%	330	352	93.75%	846	1430	59.16%	973	2316	42.01%	694	1337	51.91%
Monday	6/10/2024	238	347	68.59%	925	1234	74.96%	806	1192	67.62%	330	352	93.75%	1101	1430	76.99%	1019	2316	44.00%	692	1337	51.76%
Tuesday	6/11/2024	311	347	89.63%	924	1234	74.88%	777	1192	65.18%	339	352	96.31%	1301	1430	90.98%	985	2316	42.53%	704	1337	52.66%

Source: Ontario International Airport Authority, June 2024