FIR Wilson 2
PXX-XXXXX
City of Perris, Riverside County, California

Preliminary Drainage Study

Prepared for:
First Industrial Realty Trust
Attn: Matt Pioli
898 N Sepulveda Blvd, Suite 175
El Segundo, CA 90245
(310) 321-3817

Prepared By:
ALBERT A. WEBB ASSOCIATES
3788 McCray Street
Riverside, CA 92506

Original Date Prepared: January 2021
Revision Date(s):



DJ Arellano, P.E.
Senior Engineer

TABLE OF CONTENTS

SECTION 1 - SUMMARY 1-1

PURPOSE 1-1
DESCRIPTION OF WATERSHED 1-1
PROPOSED CONDITIONS 1-1
METHODOLOGY 1-2

FIG. 1 VICINITY MAP
FIG. 2 USGS TOPOGRAPHY MAP
FIG. 3 AERIAL PHOTOGRAPH
FIG. 4 RECEIVING WATERBODIES
FIG. 5 SOILS MAP

SECTION 2 - HYDROLOGY ANALYSIS 2-1

HYDROLOGY PARAMETERS 2-1
ON-SITE RATIONAL METHOD HYDROLOGY 2-1

SECTION 3 - HYDRAULIC ANALYSIS 3-1

ON-SITE STORM DRAIN FACILITIES 3-1

SECTION 4 - CONCLUSION 4-1

APPENDIX A – HYDROLOGY ..... A

HYDROLOGIC PARAMETERS
10-YEAR ONSITE HYDROLOGY (RATIONAL METHOD)
100-YEAR ONSITE HYDROLOGY (RATIONAL METHOD)
RATIONAL METHOD HYDROLOGY MAP

APPENDIX B – HYDRAULICS ..... B

U-CHANNEL AND SWALE
LINE AC-2
OUTLET STRUCTURE-A CALCULATION

APPENDIX C – REFERENCES C

LINE A-B, LINE A-C FLOW REALLOCATION MEMO

SECTION 1 - SUMMARY

PURPOSE

The purpose of this report is to document the hydrologic and hydraulic analyses performed in support of the First Industrial Realty Trust (FIR) Wilson 2 project located in the City of Perris, County of Riverside, California. The project site is located south of Rider Street, north of Placentia Avenue and situated between Wilson Avenue and the Perris Valley Storm Drain Channel. The project proposes to build a commercial/industrial building on approximately 8.3 net acres. This report will summarize the hydrologic and hydraulic analyses that were conducted in order to determine the necessary drainage improvements required to provide flood protection for the proposed building and safely convey the runoff through the site.

The scope of this report will include the following:

- Determine the peak 100-year and 10-year flow rates for the developed condition using the Riverside County Flood Control and Water Conservation District (RCFC&WCD) Rational Method.
- Determine the required storm drain facilities, alignment, and sizes required to flood protect the project site.
- Determine the necessary basin area and media depth required for water quality treatment
- Preparation of a preliminary report summarizing the hydrology and hydraulic results.

DESCRIPTION OF WATERSHED

As previously described, the project is proposing a commercial/industrial building (approximately 154,600 square feet) on approximately 9.7 gross acres of vacant land. Existing elevations across the site vary from 1441 at the northwest corner to 1439 at the southeast corner (NAVD 88). The site currently slopes down at an approximate 0.2% grade to the southeast. The existing drainage pattern for the site and the general area is characterized by sheet flows that follow the slope to the southeast. The runoff discharges into the Perris Valley Storm Drain Channel which drains into the San Jacinto River before finally reaching Canyon Lake and Lake Elsinore.

The project is located within the Perris Valley Commerce Center (PVCC) specific plan and is also within the Perris Valley Master Drainage Plan (PVMDP) adopted July 1987 and revised June 1991. This project is tabled to discharge into MDP Line A-C, which does not currently exist. Line A-C will be built with FIR Wilson 1 (P19-00007) and designed per guidelines listed in the Line A-B, Line A-C Reallocation Memo due to future impacts of RCTC's Mid-County Parkway.

PROPOSED CONDITIONS

The proposed project will only generate on-site flows. This runoff will surface flow through the site utilizing curb and gutter. All on-site flow will discharge into a proposed bio-retention basin which will treat the water quality volume and bypass higher intensity runoff. Mitigation for HCOC is not required; the project will connect to MDP facility Line A-C before out falling to the Perris Valley Storm Drain.

Since the project is HCOC exempt, a comparison analysis between existing and proposed drainage conditions will not be required. Only analyses demonstrating how proposed designs will flood protect the proposed site are necessary.

The project proposes two main on-site drainage paths. The southern and western portions of the site will surface flow to the eastern screen wall in the truck court, and runoff will outfall into the proposed bio-retention basin via a wall cut and swale. The northern and eastern portions will surface flow into the proposed bio-retention basin via curb cuts and u-channels. See the Rational Method Map in Appendix A.

This project will not be subject to off-site run-on. All adjacent vacant properties currently and will continue to sheet flow into the Perris Valley Storm Drain Channel. In addition, Wilson Avenue already safely conveys road runoff via existing curb and gutter. Street improvements will not be considered since Wilson Avenue is already constructed to its ultimate width. Therefore, no analyses need to be done for off-site flows.

METHODOLOGY

HYDROLOGY

Hydrologic calculations were performed in accordance with the RCFC&WCD Hydrology Manual, dated April 1978. The Rational Method was utilized in determining peak flow rates.

The hydrological parameters, including rainfall values and soil types were derived from the RCFC&WCD Hydrology Manual. The isohyetal maps and soil map have been included in Section 2.

Rational Method calculations were performed using a computer program developed by CivilDesign Corporation and Joseph E. Bonadiman and Associates Inc. The computer program is commonly referred to as CivilD which incorporates the hydrological parameters outlined in the RCFC&WCD Hydrology Manual.

The Rational Method was used to determine the peak flow rates to size and design the drainage facilities need to convey onsite flows through the site to the proposed basin. The flow rates were computed by generating a hydrologic "link-node" model in which the overall area is divided into separate drainage sub-areas, each tributary to a concentration point (node) determined by the proposed layout and grading.

The Unit Hydrograph Method will not be utilized since there is no need to compare existing and proposed conditions due to the HCOC exemption for this project.

HYDRAULICS

Water quality basin calculations were performed using spreadsheets that were created by RCFC&WCD. Preliminary calculations and additional details can be found in the Preliminary-WQMP.

Basin routing will not be utilized since there is no need to show flow mitigation and volume containment due to the HCOC exemption for this project.

FIG. 1 VICINITY MAP

FIG. 2 USGS TOPOGRAPHY MAP

FIG. 3 AERIAL PHOTOGRAPH

FIG. 4 RECEIVING WATERBODIES

FIG. 5 SOILS MAP

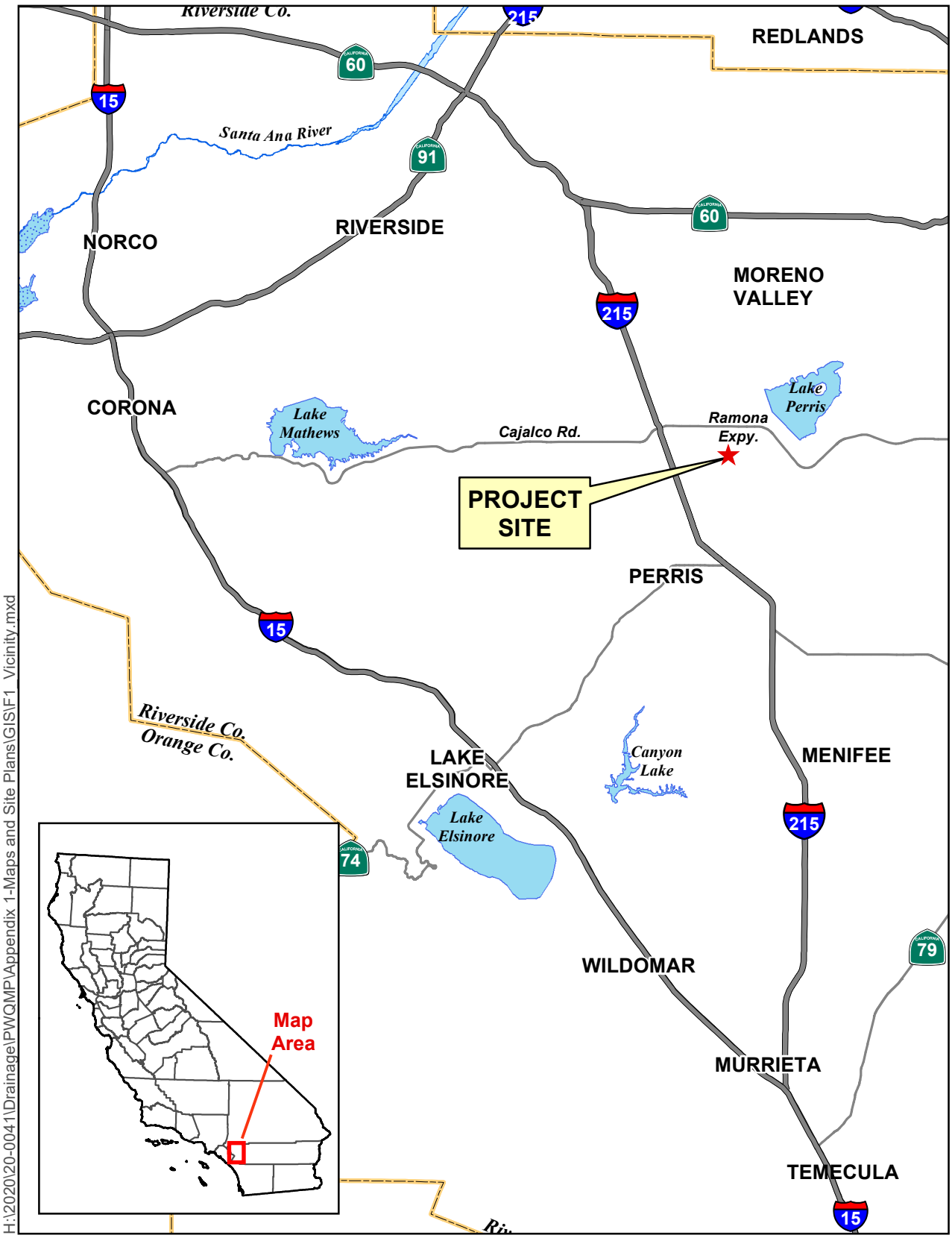

Figure 1. Vicinity Map

0 2.5 5 Miles

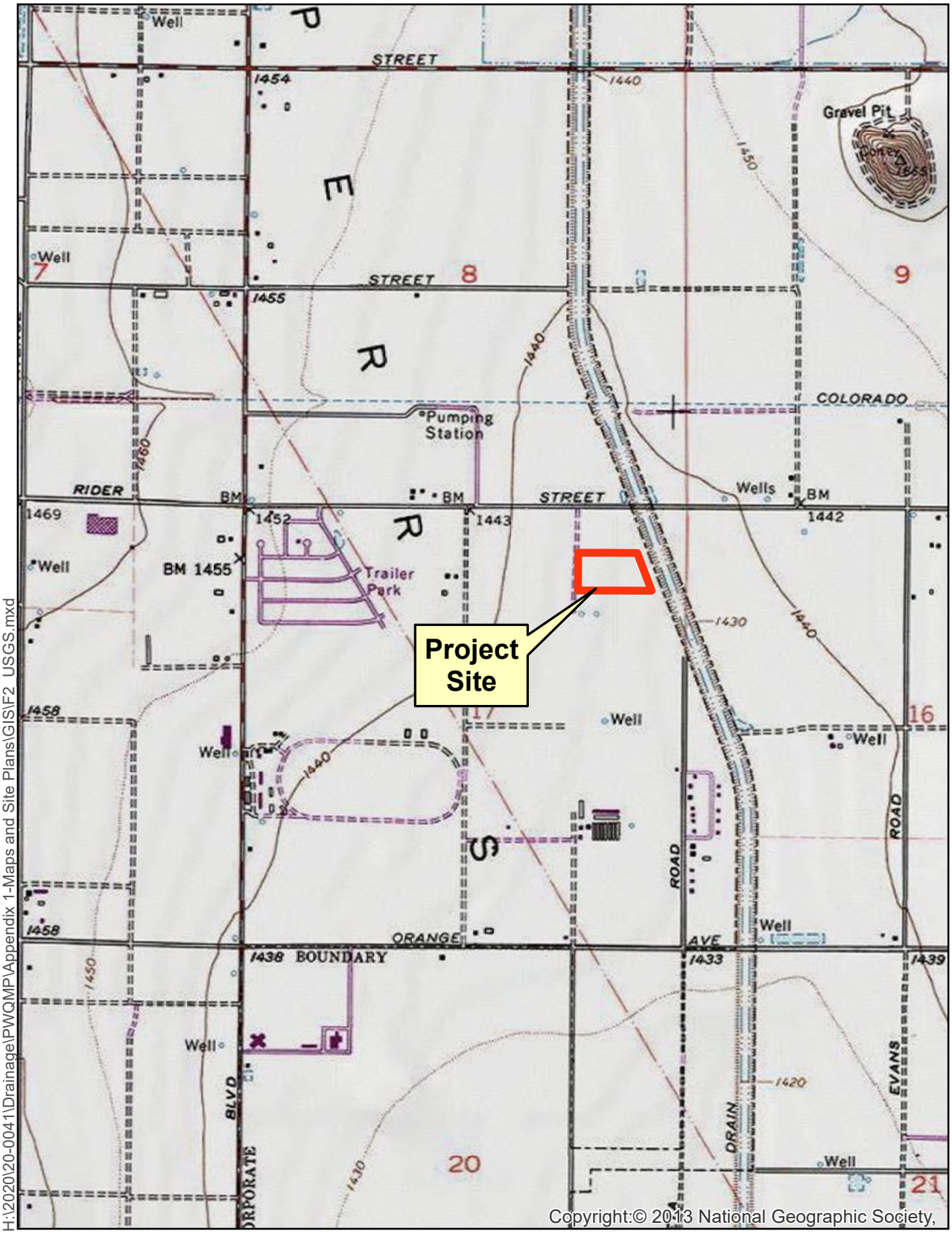

H:\2020\20-0041\Drainage\PWQMP\Appendix 1-Maps and Site Plans\GIS\F2_USGS.mxd

Sources: ESRI / USGS 7.5min Quad
DRGs: PERRIS

Figure 2. USGS Topography Map

0 1,000 2,000 Feet



Sources: County of Riverside GIS, 2013; Eagle Aerial, April 2012.

Figure 3. Aerial Photograph

0 400 800 Feet

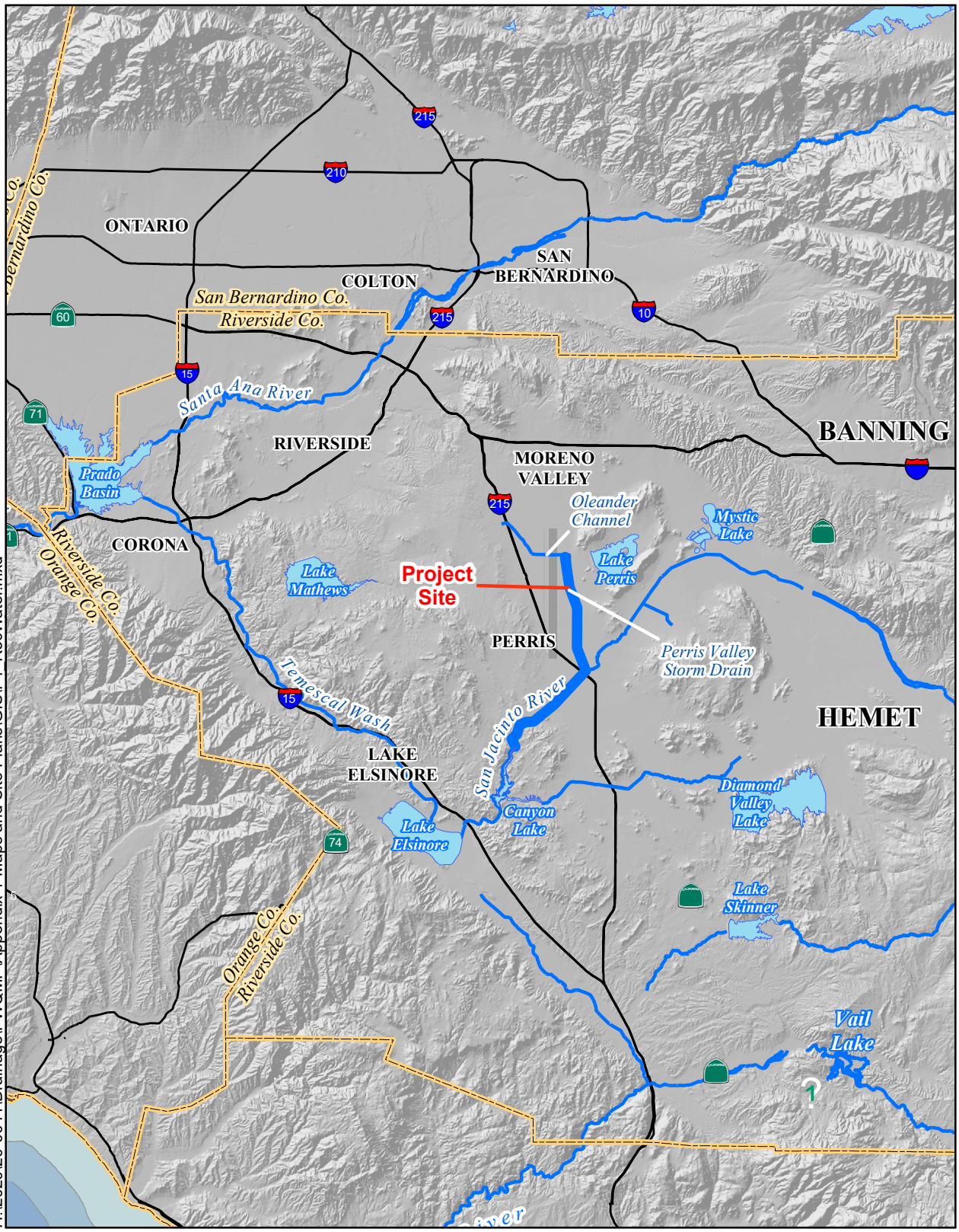

H:\2020\20-0041\Drainage\PWQMP\Appendix 1-Maps and Site Plans\GIS\F4_RecWater.mxd

Sources: USGS 30 Meter DEM;
USGS Digital Line Graph

Figure 4. Receiving Waterbodies

Flowpath

0 2 4 6
Miles

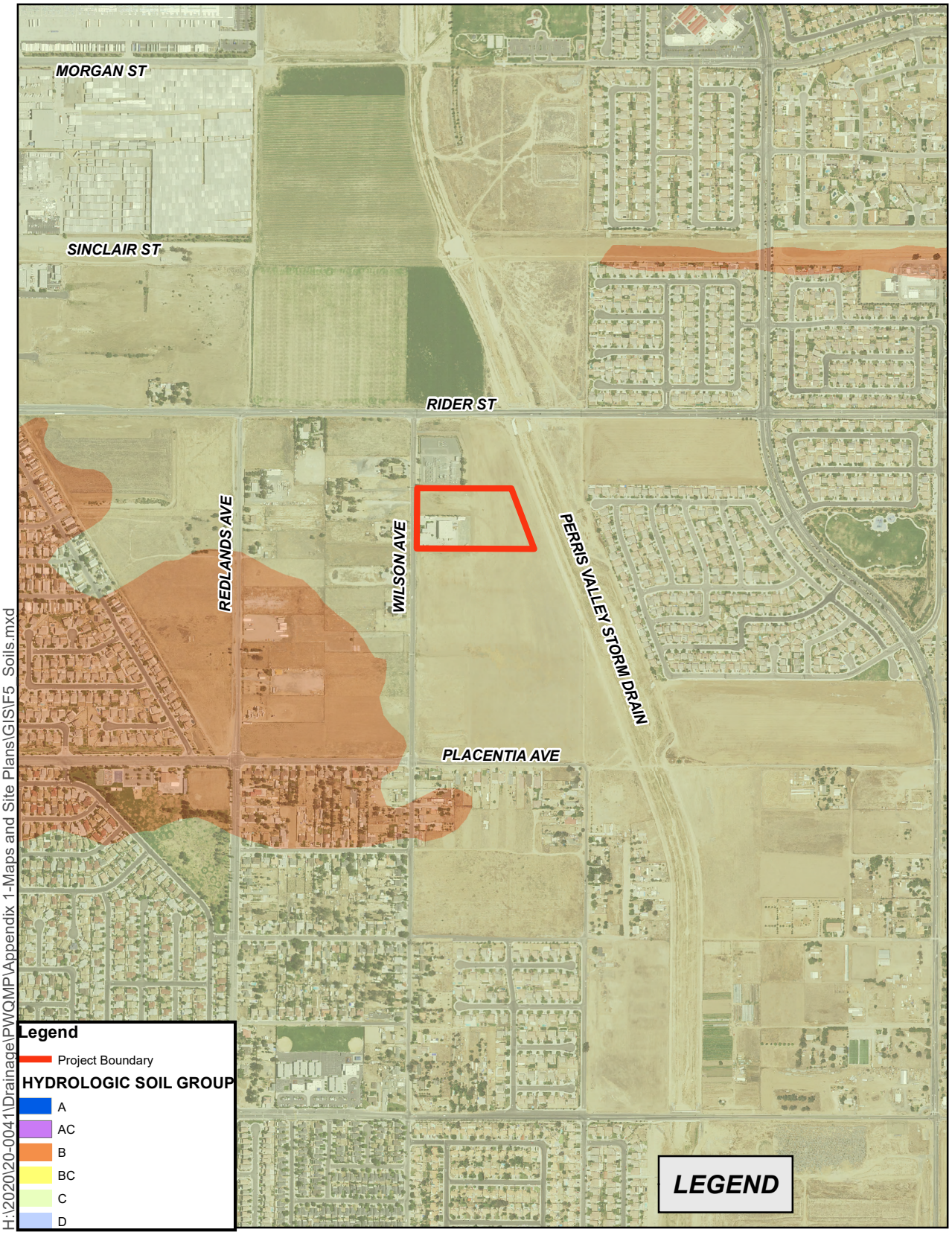

Eagle Aerial, April 2010;
Riverside County GIS, 2012
RCFC&WCD Hydology Manual Plate C-1.30

N
W E
S

0 500 1,000
Feet

Figure 5. Soils Map

SECTION 2 - HYDROLOGY ANALYSIS

HYDROLOGY PARAMETERS

The RCFC&WCD Hydrology Manual was used to determine several of the hydrological parameters. The following rainfall depths were utilized in the hydrology analyses, which were obtained from the isohyetal maps provided in the RCFC&WCD Hydrology Manual:

Table 1 – Precipitation Values

	Duration
Storm Event	**1-Hour (inches)**
2-Year	0.45
100-Year	1.21

The value for slope of intensity was determined to be 0.49. The isohyetal maps have been included in Appendix A.

Based on the Plate C-1.30 (Perris) in the RCFC&WCD Hydrology Manual, the project site is classified as soil type C. The soils map is included in Appendix A.

The cover type was determined based on the existing land cover and proposed land use of the site. Hydrological computations for the existing condition were done using 'Undeveloped – Poor Cover'. The commercial landscaping cover type was used to represent the developed condition. Table 2 below summarizes the runoff index values and the recommended values for percentage of impervious cover for each category:

Table 2 – Cover Type

Cover Type	Soil Group A	Soil Group B	Soil Group C	Soil Group D	Percentage of Impervious Cover
Undeveloped Poor Cover	67	78	86	89	0%
Commercial Landscaping	32	56	69	75	90%

ON-SITE RATIONAL METHOD HYDROLOGY

The rational method was used to determine peak flow rates in order to adequately size the proposed swales and u-channels used to convey on-site flows to the proposed basin. The project site was separated into four sub areas.

Areas A-1 and A-2 account for the southern and western portions of the site; including the entire building. They produce a 100-year peak flowrate of 12.0 cfs. This runoff will surface flow only and discharge into the proposed bio-retention basin via a wall opening and concrete u-channel.

Areas B and C account for the northern and eastern portions of the site. They produce a 100-year peak flowrate of 2.0 cfs and 2.8 cfs, respectively. Areas B and C will drain to BMP-A via u-channels.

Area D is the area including the proposed basin. This area is self-draining.

The following table summarizes the rational method results at key points:

Table 3 – Rational Method Results

Point of Interest	10-Year Peak Flow Rate (cfs)	100-Year Peak Flow Rate (cfs)
Node 102 – Flow from Areas A-1 and A-2	8.2	12.0
Node 201 – Flow from Area B	1.4	2.0
Node 301 – Flow from Area C	1.9	2.8
Total Flow	11.6	16.9

The rational method output files and hydrology map have been included in Appendix A.

SECTION 3 - HYDRAULIC ANALYSIS

ON-SITE STORM DRAIN FACILITIES

The project proposes no subsurface storm drain and will utilize curb and gutter, curb cuts, and u-channels to convey on-site flows to the proposed bio-retention basin (BMP-A). From the basin, the runoff will discharge into Outlet Structure A. The runoff from Outlet Structure A discharges into the Perris Valley Storm Drain Channel via proposed Line AC-2.

A brief summary of each system has been provided and the results of the hydraulic analyses are included in Appendix B. The peak flow rates determined from the 100-year rational method on-site hydrology analysis were utilized to evaluate the proposed storm drain systems.

Outlet Structure A

The outlet structure was sized using the peak 100-year flow rate of 16.9 cfs. A weir calculation was employed to size the BMP-A's outlet. A grated inlet with 3 grates is proposed to handle the 100-year overflow. Based on a peak flow rate of 16.9 cfs, a total of 0.5-feet of head is required to bypass the 100-year flow rate resulting in a water surface elevation of 1436.0 feet. The calculation has been included in Appendix B.

U-Channel

The southern and western portion of the project site will surface flow into one low point at the easterly truck court screen wall. A u-channel will convey this runoff to BMP-A. A normal depth calculation was used to determine the appropriate size for the u-channel with a worst case flowrate of 12.0 cfs; the bottom width was determined to be 6-feet.

All other u-channels will receive less than 3.0 cfs so they will only be 2-feet wide.

Line AC-2 (Line A-C Connection)

Line AC-2 will convey the entire runoff generated from the site into Line A-C. A normal depth calculation was used with the 100-year peak flow rate (16.9 cfs) produced from the entire site to determine the appropriate size for Line-B. It was determined that a 30-inch pipe will safely convey runoff to Line A-C. A hydraulic model for Line AC-2 will be provided during final engineering to further assess the storm drain design.

SECTION 4 - CONCLUSION

Based on the analyses and results of this report, the following conclusions were derived from the hydrology and hydraulic results:

- The proposed drainage improvements will adequately convey flows to the basin and provide flood protection for the 100-year storm event.
- The proposed basin will provide adequate water quality treatment (see P-WQMP)
- The proposed project will not impact flooding condition to upstream or downstream properties.

APPENDIX A – HYDROLOGY

HYDROLOGIC PARAMETERS

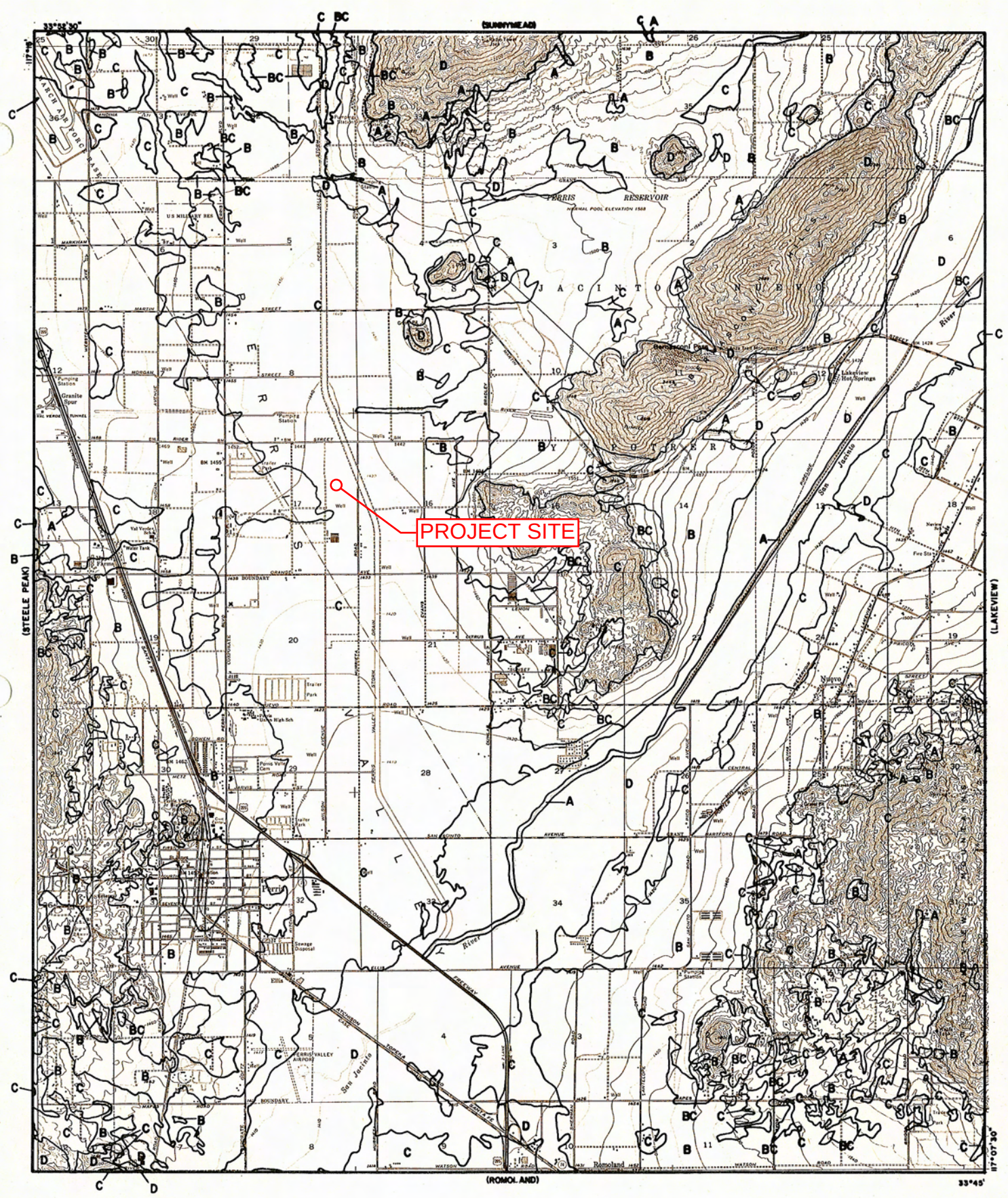

LEGEND

—— SOILS GROUP BOUNDARY

A SOILS GROUP DESIGNATION

RCFC&WCD

HYDROLOGY MANUAL

0 FEET 5000

HYDROLOGIC SOILS GROUP MAP FOR PERRIS

PLATE C-1.30

RAINFALL INTENSITY–INCHES PER HOUR

MIRA LOMA			MURRIETA - TEMECULA & RANCHO CALIFORNIA			NORCO			PALM SPRINGS			PERRIS VALLEY		
DURATION MINUTES	FREQUENCY		DURATION MINUTES	FREQUENCY		DURATION MINUTES	FREQUENCY		DURATION MINUTES	FREQUENCY		DURATION MINUTES	FREQUENCY	
	10 YEAR	100 YEAR		10 YEAR	100 YEAR		10 YEAR	100 YEAR		10 YEAR	100 YEAR		10 YEAR	100 YEAR
5	2.84	4.48	5	3.45	5.10	5	2.77	4.16	5	4.23	6.76	5	2.64	3.78
6	2.58	4.07	6	3.12	4.61	6	2.53	3.79	6	3.80	6.08	6	2.41	3.46
7	2.37	3.75	7	2.87	4.24	7	2.34	3.51	7	3.48	5.56	7	2.24	3.21
8	2.21	3.49	8	2.67	3.94	8	2.19	3.29	8	3.22	5.15	8	2.09	3.01
9	2.08	3.28	9	2.50	3.69	9	2.07	3.10	9	3.01	4.81	9	1.98	2.84
10	1.96	3.10	10	2.36	3.48	10	1.96	2.94	10	2.83	4.52	10	1.88	2.69
11	1.87	2.95	11	2.24	3.30	11	1.87	2.80	11	2.67	4.28	11	1.79	2.57
12	1.78	2.82	12	2.13	3.15	12	1.79	2.68	12	2.54	4.07	12	1.72	2.46
13	1.71	2.70	13	2.04	3.01	13	1.72	2.58	13	2.43	3.88	13	1.65	2.37
14	1.64	2.60	14	1.96	2.89	14	1.66	2.48	14	2.33	3.72	14	1.59	2.29
15	1.58	2.50	15	1.89	2.79	15	1.60	2.40	15	2.23	3.58	15	1.54	2.21
16	1.53	2.42	16	1.82	2.69	16	1.55	2.32	16	2.15	3.44	16	1.49	2.14
17	1.48	2.34	17	1.76	2.60	17	1.50	2.25	17	2.08	3.32	17	1.45	2.08
18	1.44	2.27	18	1.71	2.52	18	1.46	2.19	18	2.01	3.22	18	1.41	2.02
19	1.40	2.21	19	1.66	2.45	19	1.42	2.13	19	1.95	3.12	19	1.37	1.97
20	1.36	2.15	20	1.61	2.38	20	1.39	2.08	20	1.89	3.03	20	1.34	1.92
22	1.29	2.04	22	1.53	2.26	22	1.32	1.98	22	1.79	2.86	22	1.28	1.83
24	1.24	1.95	24	1.46	2.15	24	1.26	1.90	24	1.70	2.72	24	1.22	1.75
26	1.18	1.87	26	1.39	2.06	26	1.22	1.82	26	1.62	2.60	26	1.18	1.69
28	1.14	1.80	28	1.34	1.98	28	1.17	1.76	28	1.56	2.49	28	1.13	1.63
30	1.10	1.73	30	1.29	1.90	30	1.13	1.70	30	1.49	2.39	30	1.10	1.57
32	1.06	1.67	32	1.24	1.84	32	1.10	1.64	32	1.44	2.30	32	1.06	1.52
34	1.03	1.62	34	1.20	1.78	34	1.06	1.59	34	1.39	2.22	34	1.03	1.48
36	1.00	1.57	36	1.17	1.72	36	1.03	1.55	36	1.34	2.15	36	1.00	1.44
38	.97	1.53	38	1.13	1.67	38	1.01	1.51	38	1.30	2.09	38	.98	1.40
40	.94	1.49	40	1.10	1.62	40	.98	1.47	40	1.27	2.02	40	.95	1.37
45	.89	1.40	45	1.03	1.52	45	.92	1.39	45	1.18	1.89	45	.90	1.29
50	.84	1.32	50	.97	1.44	50	.88	1.31	50	1.11	1.78	50	.85	1.22
55	.80	1.26	55	.92	1.36	55	.84	1.25	55	1.05	1.68	55	.81	1.17
60	.76	1.20	60	.88	1.30	60	.80	1.20	60	1.00	1.60	60	.78	1.12
65	.73	1.15	65	.84	1.24	65	.77	1.15	65	.95	1.53	65	.75	1.08
70	.70	1.11	70	.81	1.19	70	.74	1.11	70	.91	1.46	70	.72	1.04
75	.68	1.07	75	.78	1.15	75	.72	1.07	75	.88	1.41	75	.70	1.00
80	.65	1.03	80	.75	1.11	80	.69	1.04	80	.85	1.35	80	.68	.97
85	.63	1.00	85	.73	1.07	85	.67	1.01	85	.82	1.31	85	.66	.94
SLOPE = .530			SLOPE = .550			SLOPE = .500			SLOPE = .580			SLOPE = .490		

RCFC & WCD

HYDROLOGY MANUAL

STANDARD INTENSITY–DURATION CURVES DATA

PLATE D-4.1 (4 of 6)

10-YEAR ONSITE HYDROLOGY (RATIONAL METHOD)

Riverside County Rational Hydrology Program

CIVILCADD/CIVILDESIGN Engineering Software,(c) 1989 - 2004 Version 7.0
Rational Hydrology Study Date: 01/27/21 File:PROP10.out

20-0041 - FIR WILSON 2.0
ONSITE RATIONAL METHOD HYDROLOGY
10 YEAR STORM EVENT
FN: PROP10.OUT TSW

********* Hydrology Study Control Information **********

English (in-lb) Units used in input data file

Program License Serial Number 4010

Rational Method Hydrology Program based on
Riverside County Flood Control & Water Conservation District
1978 hydrology manual

Storm event (year) = 10.00 Antecedent Moisture Condition = 1

Standard intensity-duration curves data (Plate D-4.1)
For the [Perris Valley] area used.
10 year storm 10 minute intensity = 1.880(In/Hr)
10 year storm 60 minute intensity = 0.780(In/Hr)
100 year storm 10 minute intensity = 2.690(In/Hr)
100 year storm 60 minute intensity = 1.120(In/Hr)

Storm event year = 10.0
Calculated rainfall intensity data:
1 hour intensity = 0.780(In/Hr)
Slope of intensity duration curve = 0.4900

++

Process from Point/Station 100.000 to Point/Station 101.000
**** INITIAL AREA EVALUATION ****

Initial area flow distance = 554.000(Ft.)
Top (of initial area) elevation = 1440.900(Ft.)
Bottom (of initial area) elevation = 1438.000(Ft.)
Difference in elevation = 2.900(Ft.)
Slope = 0.00523 s(percent)= 0.52
TC = k(0.300)*[(length^3)/(elevation change)]^0.2
Initial area time of concentration = 10.734 min.
Rainfall intensity = 1.813(In/Hr) for a 10.0 year storm
COMMERCIAL subarea type

```
Runoff Coefficient = 0.862
Decimal fraction soil group A = 0.000
Decimal fraction soil group B = 0.000
Decimal fraction soil group C = 1.000
Decimal fraction soil group D = 0.000
RI index for soil(AMC 1)  =  49.80
Pervious area fraction =  0.100; Impervious fraction =  0.900
Initial subarea runoff =      3.280(CFS)
Total initial stream area =        2.100(Ac.)
Pervious area fraction = 0.100


++++++++++++++++++++++++++++++++++++++++++++++++++++++++++++++++++++++++
Process from Point/Station      101.000 to Point/Station      102.000
**** IMPROVED CHANNEL TRAVEL TIME ****
________________________________________________________________________
Upstream point elevation =  1438.000(Ft.)
Downstream point elevation =  1436.400(Ft.)
Channel length thru subarea  =   407.000(Ft.)
Channel base width      =    0.000(Ft.)
Slope or 'Z' of left channel bank =  48.000
Slope or 'Z' of right channel bank =  33.000
Estimated mean flow rate at midpoint of channel =      5.775(CFS)
Manning's 'N'    = 0.015
Maximum depth of channel  =    1.000(Ft.)
Flow(q) thru subarea =      5.775(CFS)
Depth of flow =   0.289(Ft.), Average velocity =   1.709(Ft/s)
Channel flow top width =   23.394(Ft.)
Flow Velocity =    1.71(Ft/s)
Travel time  =    3.97 min.
Time of concentration =   14.70 min.

Sub-Channel No. 1 Critical depth =      0.264(Ft.)
  '     '       '     Critical flow top width =     21.357(Ft.)
  '     '       '     Critical flow velocity=    2.051(Ft/s)
  '     '       '     Critical flow area =      2.816(Sq.Ft)

 Adding area flow to channel
COMMERCIAL subarea type
Runoff Coefficient = 0.858
Decimal fraction soil group A = 0.000
Decimal fraction soil group B = 0.000
Decimal fraction soil group C = 1.000
Decimal fraction soil group D = 0.000
RI index for soil(AMC 1)  =  49.80
Pervious area fraction =  0.100; Impervious fraction =  0.900
Rainfall intensity =      1.554(In/Hr) for a    10.0 year storm
Subarea runoff =      4.934(CFS) for      3.700(Ac.)
Total runoff =      8.214(CFS)  Total area =       5.800(Ac.)
Depth of flow =   0.330(Ft.), Average velocity =   1.867(Ft/s)

Sub-Channel No. 1 Critical depth =      0.303(Ft.)
  '     '       '     Critical flow top width =     24.521(Ft.)
  '     '       '     Critical flow velocity=    2.213(Ft/s)
  '     '       '     Critical flow area =      3.712(Sq.Ft)
```

```
++++++++++++++++++++++++++++++++++++++++++++++++++++++++++++++++++++++++
Process from Point/Station      102.000 to Point/Station      102.000
**** CONFLUENCE OF MINOR STREAMS ****
________________________________________________________________________
Along Main Stream number: 1 in normal stream number 1
Stream flow area =      5.800(Ac.)
Runoff from this stream =      8.214(CFS)
Time of concentration =   14.70 min.
Rainfall intensity =     1.554(In/Hr)


++++++++++++++++++++++++++++++++++++++++++++++++++++++++++++++++++++++++
Process from Point/Station      100.000 to Point/Station      201.000
**** INITIAL AREA EVALUATION ****
________________________________________________________________________
Initial area flow distance =   959.000(Ft.)
Top (of initial area) elevation =  1440.900(Ft.)
Bottom (of initial area) elevation =  1437.300(Ft.)
Difference in elevation =     3.600(Ft.)
Slope =    0.00375  s(percent)=       0.38
TC = k(0.300)*[(length^3)/(elevation change)]^0.2
Initial area time of concentration =   14.287 min.
Rainfall intensity =      1.576(In/Hr) for a    10.0 year storm
COMMERCIAL subarea type
Runoff Coefficient = 0.859
Decimal fraction soil group A = 0.000
Decimal fraction soil group B = 0.000
Decimal fraction soil group C = 1.000
Decimal fraction soil group D = 0.000
RI index for soil(AMC 1)  =  49.80
Pervious area fraction =  0.100; Impervious fraction =  0.900
Initial subarea runoff =      1.353(CFS)
Total initial stream area =        1.000(Ac.)
Pervious area fraction = 0.100


++++++++++++++++++++++++++++++++++++++++++++++++++++++++++++++++++++++++
Process from Point/Station      201.000 to Point/Station      201.000
**** CONFLUENCE OF MINOR STREAMS ****
________________________________________________________________________
Along Main Stream number: 1 in normal stream number 2
Stream flow area =      1.000(Ac.)
Runoff from this stream =      1.353(CFS)
Time of concentration =   14.29 min.
Rainfall intensity =     1.576(In/Hr)


++++++++++++++++++++++++++++++++++++++++++++++++++++++++++++++++++++++++
Process from Point/Station      300.000 to Point/Station      301.000
**** INITIAL AREA EVALUATION ****
________________________________________________________________________
Initial area flow distance =   372.000(Ft.)
Top (of initial area) elevation =  1444.000(Ft.)
Bottom (of initial area) elevation =  1437.200(Ft.)
```

```
Difference in elevation =     6.800(Ft.)
Slope =    0.01828  s(percent)=       1.83
TC = k(0.300)*[(length^3)/(elevation change)]^0.2
Initial area time of concentration =    7.128 min.
Rainfall intensity =      2.215(In/Hr) for a    10.0 year storm
COMMERCIAL subarea type
Runoff Coefficient = 0.866
Decimal fraction soil group A = 0.000
Decimal fraction soil group B = 0.000
Decimal fraction soil group C = 1.000
Decimal fraction soil group D = 0.000
RI index for soil(AMC 1)  =  49.80
Pervious area fraction =  0.100; Impervious fraction =  0.900
Initial subarea runoff =      1.919(CFS)
Total initial stream area =        1.000(Ac.)
Pervious area fraction = 0.100


++++++++++++++++++++++++++++++++++++++++++++++++++++++++++++++++++++++++
Process from Point/Station      301.000 to Point/Station      301.000
**** CONFLUENCE OF MINOR STREAMS ****
________________________________________________________________________
Along Main Stream number: 1 in normal stream number 3
Stream flow area =      1.000(Ac.)
Runoff from this stream =      1.919(CFS)
Time of concentration =    7.13 min.
Rainfall intensity =     2.215(In/Hr)
Summary of stream data:

Stream   Flow rate      TC            Rainfall Intensity
 No.       (CFS)       (min)                (In/Hr)


1        8.214     14.70                1.554
2        1.353     14.29                1.576
3        1.919      7.13                2.215
Largest stream flow has longer time of concentration
Qp =      8.214 + sum of
          Qb         Ia/Ib
           1.353 *    0.986 =      1.334
          Qb         Ia/Ib
           1.919 *    0.701 =      1.346
Qp =     10.894

Total of 3 streams to confluence:
Flow rates before confluence point:
       8.214       1.353       1.919
Area of streams before confluence:
        5.800        1.000        1.000
Results of confluence:
Total flow rate =     10.894(CFS)
Time of concentration =    14.702 min.
Effective stream area after confluence =      7.800(Ac.)


++++++++++++++++++++++++++++++++++++++++++++++++++++++++++++++++++++++++
```

Process from Point/Station 301.000 to Point/Station 301.000
**** SUBAREA FLOW ADDITION ****

COMMERCIAL subarea type
Runoff Coefficient = 0.858
Decimal fraction soil group A = 0.000
Decimal fraction soil group B = 0.000
Decimal fraction soil group C = 1.000
Decimal fraction soil group D = 0.000
RI index for soil(AMC 1) = 49.80
Pervious area fraction = 0.100; Impervious fraction = 0.900
Time of concentration = 14.70 min.
Rainfall intensity = 1.554(In/Hr) for a 10.0 year storm
Subarea runoff = 0.667(CFS) for 0.500(Ac.)
Total runoff = 11.560(CFS) Total area = 8.300(Ac.)
End of computations, total study area = 8.30 (Ac.)
The following figures may
be used for a unit hydrograph study of the same area.

Area averaged pervious area fraction(Ap) = 0.100
Area averaged RI index number = 69.0

100-YEAR ONSITE HYDROLOGY (RATIONAL METHOD)

Riverside County Rational Hydrology Program

CIVILCADD/CIVILDESIGN Engineering Software,(c) 1989 - 2004 Version 7.0
Rational Hydrology Study Date: 01/27/21 File:PROP100.out

20-0041 - FIR WILSON 2.0
ONSITE RATIONAL METHOD HYDROLOGY
100 YEAR STORM EVENT
FN: PROP100.OUT TSW

********* Hydrology Study Control Information **********

English (in-lb) Units used in input data file

Program License Serial Number 4010

Rational Method Hydrology Program based on
Riverside County Flood Control & Water Conservation District
1978 hydrology manual

Storm event (year) = 100.00 Antecedent Moisture Condition = 1

Standard intensity-duration curves data (Plate D-4.1)
For the [Perris Valley] area used.
10 year storm 10 minute intensity = 1.880(In/Hr)
10 year storm 60 minute intensity = 0.780(In/Hr)
100 year storm 10 minute intensity = 2.690(In/Hr)
100 year storm 60 minute intensity = 1.120(In/Hr)

Storm event year = 100.0
Calculated rainfall intensity data:
1 hour intensity = 1.120(In/Hr)
Slope of intensity duration curve = 0.4900

++
Process from Point/Station 100.000 to Point/Station 101.000
**** INITIAL AREA EVALUATION ****

Initial area flow distance = 554.000(Ft.)
Top (of initial area) elevation = 1440.900(Ft.)
Bottom (of initial area) elevation = 1438.000(Ft.)
Difference in elevation = 2.900(Ft.)
Slope = 0.00523 s(percent)= 0.52
TC = k(0.300)*[(length^3)/(elevation change)]^0.2
Initial area time of concentration = 10.734 min.
Rainfall intensity = 2.603(In/Hr) for a 100.0 year storm
COMMERCIAL subarea type

```
Runoff Coefficient = 0.869
Decimal fraction soil group A = 0.000
Decimal fraction soil group B = 0.000
Decimal fraction soil group C = 1.000
Decimal fraction soil group D = 0.000
RI index for soil(AMC 1)  =  49.80
Pervious area fraction =  0.100; Impervious fraction =  0.900
Initial subarea runoff =      4.752(CFS)
Total initial stream area =        2.100(Ac.)
Pervious area fraction = 0.100


++++++++++++++++++++++++++++++++++++++++++++++++++++++++++++++++++++++++
Process from Point/Station      101.000 to Point/Station      102.000
**** IMPROVED CHANNEL TRAVEL TIME ****
________________________________________________________________________
Upstream point elevation =  1438.000(Ft.)
Downstream point elevation =  1436.400(Ft.)
Channel length thru subarea  =   407.000(Ft.)
Channel base width      =    0.000(Ft.)
Slope or 'Z' of left channel bank =  48.000
Slope or 'Z' of right channel bank =  33.000
Estimated mean flow rate at midpoint of channel =      8.408(CFS)
Manning's 'N'    = 0.015
Maximum depth of channel  =    1.000(Ft.)
Flow(q) thru subarea =      8.408(CFS)
Depth of flow =   0.333(Ft.), Average velocity =   1.878(Ft/s)
Channel flow top width =   26.934(Ft.)
Flow Velocity =    1.88(Ft/s)
Travel time  =    3.61 min.
Time of concentration =   14.35 min.

Sub-Channel No. 1 Critical depth =      0.305(Ft.)
  '     '       '     Critical flow top width =     24.680(Ft.)
  '     '       '     Critical flow velocity=    2.236(Ft/s)
  '     '       '     Critical flow area =      3.760(Sq.Ft)

 Adding area flow to channel
COMMERCIAL subarea type
Runoff Coefficient = 0.866
Decimal fraction soil group A = 0.000
Decimal fraction soil group B = 0.000
Decimal fraction soil group C = 1.000
Decimal fraction soil group D = 0.000
RI index for soil(AMC 1)  =  49.80
Pervious area fraction =  0.100; Impervious fraction =  0.900
Rainfall intensity =      2.258(In/Hr) for a   100.0 year storm
Subarea runoff =      7.238(CFS) for      3.700(Ac.)
Total runoff =     11.990(CFS)  Total area =       5.800(Ac.)
Depth of flow =   0.380(Ft.), Average velocity =   2.052(Ft/s)

Sub-Channel No. 1 Critical depth =      0.352(Ft.)
  '     '       '     Critical flow top width =     28.477(Ft.)
  '     '       '     Critical flow velocity=    2.395(Ft/s)
  '     '       '     Critical flow area =      5.006(Sq.Ft)
```

```
++++++++++++++++++++++++++++++++++++++++++++++++++++++++++++++++++++++++++++++
Process from Point/Station      102.000 to Point/Station      102.000
**** CONFLUENCE OF MINOR STREAMS ****
_____________________________________________________________________________
Along Main Stream number: 1 in normal stream number 1
Stream flow area =      5.800(Ac.)
Runoff from this stream =     11.990(CFS)
Time of concentration =   14.35 min.
Rainfall intensity =     2.258(In/Hr)


++++++++++++++++++++++++++++++++++++++++++++++++++++++++++++++++++++++++++++++
Process from Point/Station      100.000 to Point/Station      201.000
**** INITIAL AREA EVALUATION ****
_____________________________________________________________________________
Initial area flow distance =   959.000(Ft.)
Top (of initial area) elevation =  1440.900(Ft.)
Bottom (of initial area) elevation =  1437.300(Ft.)
Difference in elevation =     3.600(Ft.)
Slope =    0.00375  s(percent)=       0.38
TC = k(0.300)*[(length^3)/(elevation change)]^0.2
Initial area time of concentration =   14.287 min.
Rainfall intensity =      2.262(In/Hr) for a   100.0 year storm
COMMERCIAL subarea type
Runoff Coefficient = 0.866
Decimal fraction soil group A = 0.000
Decimal fraction soil group B = 0.000
Decimal fraction soil group C = 1.000
Decimal fraction soil group D = 0.000
RI index for soil(AMC 1)  =  49.80
Pervious area fraction =  0.100; Impervious fraction =  0.900
Initial subarea runoff =      1.960(CFS)
Total initial stream area =        1.000(Ac.)
Pervious area fraction = 0.100


++++++++++++++++++++++++++++++++++++++++++++++++++++++++++++++++++++++++++++++
Process from Point/Station      201.000 to Point/Station      201.000
**** CONFLUENCE OF MINOR STREAMS ****
_____________________________________________________________________________
Along Main Stream number: 1 in normal stream number 2
Stream flow area =      1.000(Ac.)
Runoff from this stream =      1.960(CFS)
Time of concentration =   14.29 min.
Rainfall intensity =     2.262(In/Hr)


++++++++++++++++++++++++++++++++++++++++++++++++++++++++++++++++++++++++++++++
Process from Point/Station      300.000 to Point/Station      301.000
**** INITIAL AREA EVALUATION ****
_____________________________________________________________________________
Initial area flow distance =   372.000(Ft.)
Top (of initial area) elevation =  1444.000(Ft.)
Bottom (of initial area) elevation =  1437.200(Ft.)
```

```
Difference in elevation =     6.800(Ft.)
Slope =    0.01828  s(percent)=       1.83
TC = k(0.300)*[(length^3)/(elevation change)]^0.2
Initial area time of concentration =    7.128 min.
Rainfall intensity =      3.181(In/Hr) for a   100.0 year storm
COMMERCIAL subarea type
Runoff Coefficient = 0.873
Decimal fraction soil group A = 0.000
Decimal fraction soil group B = 0.000
Decimal fraction soil group C = 1.000
Decimal fraction soil group D = 0.000
RI index for soil(AMC 1)  =  49.80
Pervious area fraction =  0.100; Impervious fraction =  0.900
Initial subarea runoff =      2.778(CFS)
Total initial stream area =        1.000(Ac.)
Pervious area fraction = 0.100


++++++++++++++++++++++++++++++++++++++++++++++++++++++++++++++++++++++++
Process from Point/Station      301.000 to Point/Station      301.000
**** CONFLUENCE OF MINOR STREAMS ****
________________________________________________________________________
Along Main Stream number: 1 in normal stream number 3
Stream flow area =      1.000(Ac.)
Runoff from this stream =      2.778(CFS)
Time of concentration =    7.13 min.
Rainfall intensity =     3.181(In/Hr)
Summary of stream data:

Stream   Flow rate      TC            Rainfall Intensity
 No.       (CFS)       (min)                (In/Hr)


1       11.990     14.35                2.258
2        1.960     14.29                2.262
3        2.778      7.13                3.181
Largest stream flow has longer time of concentration
Qp =     11.990 + sum of
          Qb         Ia/Ib
           1.960 *    0.998 =      1.956
          Qb         Ia/Ib
           2.778 *    0.710 =      1.972
Qp =     15.918

Total of 3 streams to confluence:
Flow rates before confluence point:
      11.990       1.960       2.778
Area of streams before confluence:
        5.800        1.000        1.000
Results of confluence:
Total flow rate =     15.918(CFS)
Time of concentration =    14.346 min.
Effective stream area after confluence =      7.800(Ac.)


++++++++++++++++++++++++++++++++++++++++++++++++++++++++++++++++++++++++
```

Process from Point/Station 301.000 to Point/Station 301.000
**** SUBAREA FLOW ADDITION ****

COMMERCIAL subarea type
Runoff Coefficient = 0.866
Decimal fraction soil group A = 0.000
Decimal fraction soil group B = 0.000
Decimal fraction soil group C = 1.000
Decimal fraction soil group D = 0.000
RI index for soil(AMC 1) = 49.80
Pervious area fraction = 0.100; Impervious fraction = 0.900
Time of concentration = 14.35 min.
Rainfall intensity = 2.258(In/Hr) for a 100.0 year storm
Subarea runoff = 0.978(CFS) for 0.500(Ac.)
Total runoff = 16.896(CFS) Total area = 8.300(Ac.)
End of computations, total study area = 8.30 (Ac.)
The following figures may
be used for a unit hydrograph study of the same area.

Area averaged pervious area fraction(Ap) = 0.100
Area averaged RI index number = 69.0

RATIONAL METHOD HYDROLOGY MAP

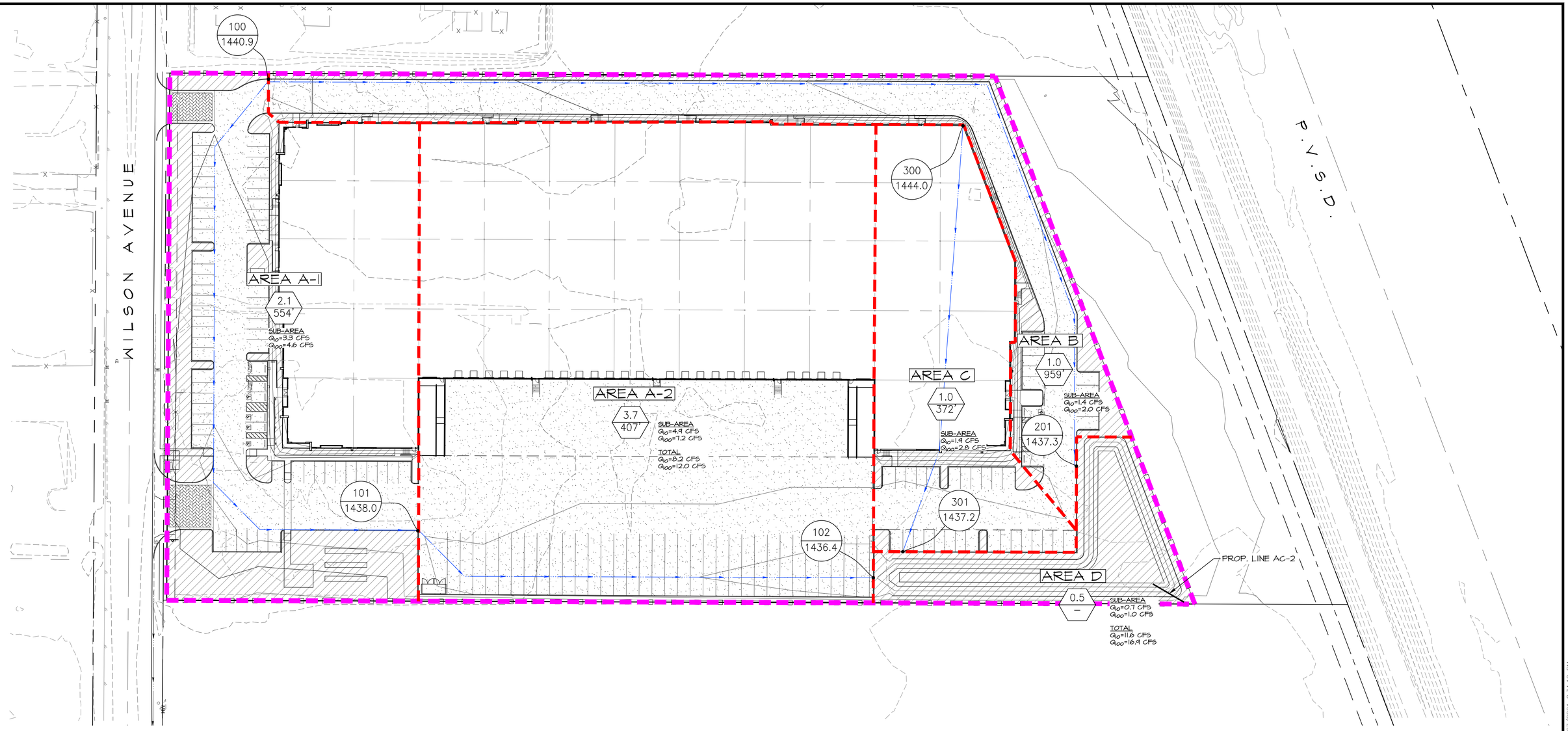

LEGEND

- DRAINAGE MANAGEMENT BOUNDARY
- SUB-AREA
- FLOW DIRECTION
- 101 / 14xx — NODE DESIGNATION / NODE ELEVATION
- *14XX — *INVERT ELEVATION
- 5.0 / 1000' — WATERSHED AREA (ACRES) / LONGEST WATER PATH (FT)

N W E S

1" = 40'

40 0 40 80 120

CITY OF PERRIS

RATIONAL METHOD HYDROLOGY MAP
FIR WILSON 2
PXX-XXXXX

SCALE: 1"=40'	ALBERT A. WEBB ASSOCIATES — ENGINEERING CONSULTANTS, 3788 McCRAY STREET, RIVERSIDE CA. 92506, PH. (951) 686-1070, FAX (951) 788-1256	W.O. 20-0041
DATE: 01/26/2021		SHEET |
DESIGNED:		OF 1 SHEETS
CHECKED:		DWG. NO.
PLN CK REF:		
F.B.		

H:\2020\20-0041\DRAINAGE\HYDROLOGY\DWG FOLDER\20-0041-PHYD-RATIONAL.DWG 1/27/2021 8:34:12 PM

APPENDIX B – HYDRAULICS

U-CHANNEL AND SWALE

Hydraulic Analysis Report

Project Data

Project Title:

Designer:

Project Date: Thursday, December 17, 2020

Project Units: U.S. Customary Units

Notes:

Channel Analysis: U-Channel

Notes:

Input Parameters

Channel Type: Rectangular

Channel Width: 6.0000 ft

Longitudinal Slope: 0.0040 ft/ft

Manning's n: 0.0150

Flow: 12.0000 cfs

Result Parameters

Depth: 0.5381 ft

Area of Flow: 3.2289 ft^2

Wetted Perimeter: 7.0763 ft

Hydraulic Radius: 0.4563 ft

Average Velocity: 3.7165 ft/s

Top Width: 6.0000 ft

Froude Number: 0.8928

Critical Depth: 0.4990 ft

Critical Velocity: 4.0083 ft/s

Critical Slope: 0.0051 ft/ft

Critical Top Width: 6.00 ft

Calculated Max Shear Stress: 0.1343 lb/ft^2

Calculated Avg Shear Stress: 0.1139 lb/ft^2

LINE AC-2

Hydraulic Analysis Report

Project Data

Project Title:

Designer:

Project Date: Thursday, December 17, 2020

Project Units: U.S. Customary Units

Notes:

Channel Analysis: Line AC-2

Notes:

Input Parameters

Channel Type: Circular

Pipe Diameter: 2.5000 ft

Longitudinal Slope: 0.0030 ft/ft

Manning's n: 0.0130

Flow: 16.9000 cfs

Result Parameters

Depth: 1.6188 ft

Area of Flow: 3.3627 ft^2

Wetted Perimeter: 4.6756 ft

Hydraulic Radius: 0.7192 ft

Average Velocity: 5.0257 ft/s

Top Width: 2.3887 ft

Froude Number: 0.7465

Critical Depth: 1.3904 ft

Critical Velocity: 6.0259 ft/s

Critical Slope: 0.0048 ft/ft

Critical Top Width: 2.48 ft

Calculated Max Shear Stress: 0.3030 lb/ft^2

Calculated Avg Shear Stress: 0.1346 lb/ft^2

OUTLET STRUCTURE-A CALCULATION

Weir Inlet
Ponding Depth Calculation

ALBERT A WEBB ASSOCIATES
ENGINEERING CONSULTANTS

Designer:	TSW
Date:	12/1/2020
Project:	FIR Wilson 2.0
Location:	Outlet Structure for WQ Basin A

OUTLET STRUCTURE PONDING DEPTH SPPWC 305-3

DISCHARGE (cfs)	16.9
NUMBER OF GRATES	3
LENGTH (ft)	18.813

$$Q = C L (h)^{3/2}$$

WEIR COEFFICIENT	C	3	
WEIR LENGTH	L	18.813	ft^2
HEAD	h	0.45	ft
Flow	Q	16.90	cfs

Top of Weir Elevation: 1435.6
Water Surface Elevation: 1436.05

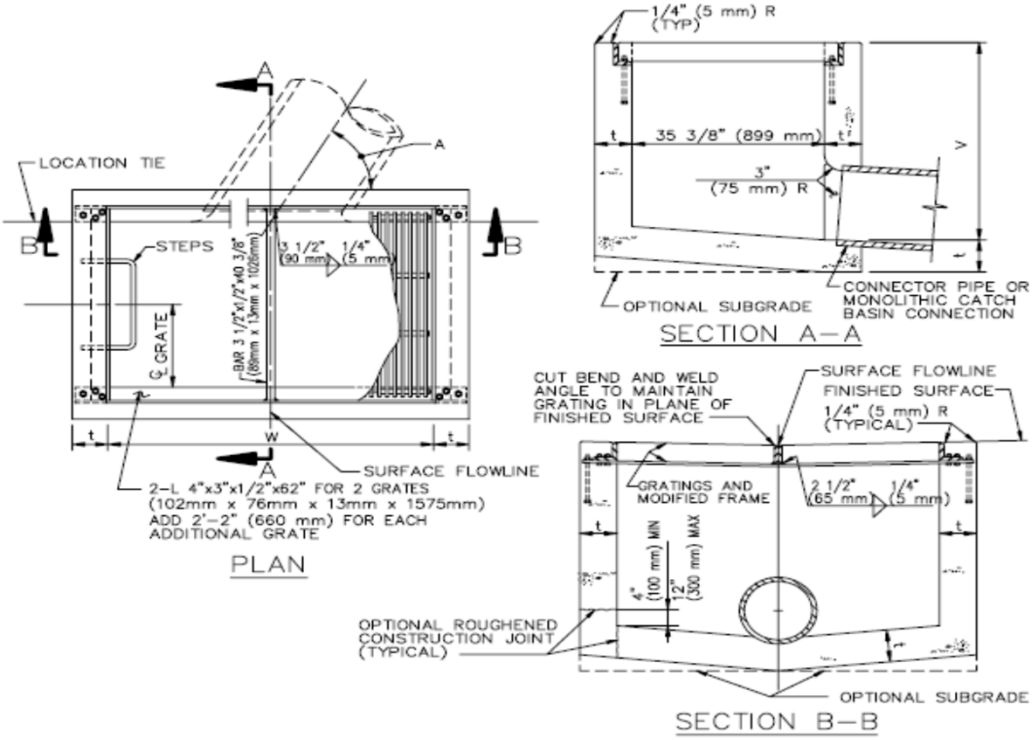

APPENDIX C – REFERENCES

LINE A-B, LINE A-C FLOW REALLOCATION MEMO

Technical Memorandum

To: Stuart E. McKibbin, P.E. (City of Perris)

From: Tyler Webb, E.I.T. (Webb)
DJ Arellano, P.E. (Webb)

Date: February 12, 2020

Re: Perris Valley MDP: Line A-B and Line A-C Tributary Watershed Modification

This technical memorandum has been prepared to document to the City of Perris and Riverside County Flood Control that the modification of tributary watersheds for Perris Valley MDP facilities Line A-B and Line A-C will not significantly impact the existing design of Line A-B or the design flow rate for the Perris Valley Storm Drain (PVSD). Master Drainage Plans are prepared based on the best data available at the time, and they provide guidance on how drainage in a particular area can be handled. It is often the case that development patterns required the modification of MDPs. Perris Valley Line A-B was designed by Thienes Engineering in conjunction with the development of an industrial building that is located on the southwesterly side of the intersection of Rider Street and Redlands Avenue. The design was sized based on assumed land uses and drainage strategies for the tributary watershed. Subsequent to the construction of Line A-B, several additional industrial buildings have either been constructed, or are planned to be constructed. The drainage design for these sites, coupled with site specific drainage strategies, has resulted in reduced flow rates for Line A-B compared to the original design assumptions. This memo documents the changes from the original design assumptions and proposes to introduce additional tributary area into Line A-B to take advantage of the unused capacity in the facility. This is done in such a manner that the peak design flows of PVSD are not changed and the tributary area for Line A-C can be reduced. This change in the MDP will accommodate the forthcoming construction of RCTC's Mid-County Parkway as well.

Section 1-A: Line A-B Capacity

Line A-B is located in Rider Street and has been constructed to accommodate the peak flowrates determined by Thienes Engineering when they designed the facility. As-built plans, to the intersection of Rider Street and Perris Boulevard, are included as part of this memorandum as reference. The facility is designed to accommodate runoff as depicted in the line A-B rational method map and analysis completed by Thienes Engineering (see Appendix A).

The proposed modification of tributary watershed areas, and the corresponding peak flow rates were determined using an area-yield analysis. The yield is based on the Line A-B rational method map and analysis stated above. The average yield was rounded up to the nearest whole number of 2.0 cfs/acre to conservatively calculate the peak flow rates (see Appendix A for modified drainage areas).

Hydraulic models were developed, based on the as-built plans for Line A-B. One model used the modified flow rates (revised model) determined using the methodology outlined above. The revised model was compared to a model using the original tributary flowrates (original model) to determine if Line A-B has adequate capacity. The hydraulic models were only completed to just before Lateral AB-11; this is because the tributary flowrates upstream of Lateral AB-10 remained unchanged. It should be noted that the revised model shows an increase in total flowrate for Line A-B; the area-yield method does not utilize confluences between the laterals and Line A-B which can lower the total flowrate by considering the time of concentration. The initial HGL for this model was taken from the ultimate Perris Valley Storm Drain Channel plans and double checked with the initial HGL in the Line A-B as-built plans, which both match and use the NGVD29 datum. The hydraulic analyses of Line A-B, even the one initially conducted by Thienes Engineering, assume ultimate improvements of the Channel have been completed. Capacity will be limited until the ultimate Channel improvements have been made.

The following are brief descriptions of the revised laterals for reference: **Lateral AB-1** is unchanged, **Lateral AB-2** is the single discharge point for the Rider II Distribution Center (DPR No. 19-00004) and removes flow from laterals AB-3 and AB-6, **Lateral AB-4** is the single discharge point for the Core 5 Rider Industrial project (DPR No. 19-05267) and removes flow from laterals AB-5 and AB-7, **Lateral AB-7.5** is the single discharge point for the FIR Rider Industrial project (DPR No. 19-05161) and removes flow from Lateral AB-8, **Lateral AB-9** is the single discharge point for the constructed Rider III Distribution Center which will discharge via pump at a constant 8 cfs instead of the original gravity flow of 61 cfs, **Lateral AB-10** will not remove flow from any laterals and be extended further south to add an additional 33 cfs.

Table 1 shows the HGL's (NGVD29) and total tributary flowrates at significant points for the original and revised Line A-B hydraulic models. For reference, Line A-B is an 8'x7' RCB from STA. 9+97.60 (outlet) to STA. 17+77.51 (Lateral AB-4), an 8'x6' RCB from STA. 17+77.51 (Lateral AB-4) to STA. 30+93.93 (Lateral AB-9), and a 7'x5' RCB from STA. 30+93.93 (Lateral AB-9) to the end of the model.

Table 1 – Line A-B hydraulics

Station and Lateral	Lateral Q's Original/Revised (cfs)	Line A-B Original Model HGL/Q* (ft/cfs)	Line A-B Revised Model HGL/Q* (ft/cfs)	Line A-B Revised minus Original ΔHGL/ΔQ (ft/cfs)
9+97.60 (Outlet)	--	1433.0/483.0	1433.0/506.1	0.0/23.1
12+63.33 (Lat AB-1)	21.1/21.1	1433.9/461.9	1434.0/485.0	0.1/23.1
12+75.33 (Lat AB-2)	15.9/87.0	1434.2/446.0	1434.7/398.0	0.5/-48.0
17+71.51 (Lat AB-4)	12.8/25.0	1435.0/413.0	1434.9/373.0	-0.1/-40.0
25+00.00 (Lat AB-7.5)	0.0/35.0	**1437.5/367.0	1437.4/338.0	-0.1/-29.0
30+83.49 (Lat AB-9)	61.0/8.0	1439.1/295.0	1438.1/330.0	***-1.0/35.0
31+16.47 (Lat AB-10)	13.0/48.0	1439.4/282.0	1439.2/282.0	-0.2/0.0

*Q is the flowrate in Line A-B directly upstream of the lateral junction
**Approximate HGL for proposed Lat AB-7.5 in the original model
***HGL is lower with higher Q because of downstream hydraulic jump, flow at Lat AB-9 is super critical

Per the results above, the flow reallocation will not significantly impact the hydraulics in Line A-B. The greatest HGL increase of 0.5-feet was located at Lateral AB-2 (Rider II Distribution Center outlet); all other HGL changes either decreased or were insignificant. This means the Line A-B HGL will not rise above the Rider Street pavement surface as previously designed. It should be mentioned that the revised lateral hydraulics will need to be analyzed separately with the construction of the proposed projects, and they might need to be upsized given the onsite designs.

See Appendix B for the Line A-B hydraulic calculations and plan and profile.

See Appendix D for the Line A-B as-built plans for reference.

See Appendix E for Ultimate Perris Valley Storm Drain Channel plans for reference.

Section 1-B: Line A-C Capacity

Line A-C is a proposed storm drain line whose MDP alignment is disrupted by the Mid County Parkway. As stated above, the tributary areas for Line A-C and Line A-B will be reduced because of this. The modified area for Line A-C was roughly cut in half from the original MDP area; it is our understanding through preliminary correspondence with Mark Lancaster at Riverside County Transportation Commission (RCTC), that the Mid County Parkway will address its own generated runoff by constructing and draining to MDP facility Line H. The proposed tributary flowrate to Line A-C was calculated using area-yield method of 2.0 cfs/acre which yields a total flowrate of 72.6 cfs (see Appendix A for reallocated drainage areas).

A preliminary hydraulic model, in NAVD88, was developed to analyze the proposed alignment and profile of Line A-C. The initial HGL for this model was taken from the ultimate Perris Valley Storm Drain Channel plans, which use the NGVD29 datum and were converted to NAVD88 (NAVD88 = NGVD29 + 2.6'). The hydraulic analysis of Line A-C assumes ultimate improvements of the PVSD have been completed. Capacity will be limited, just like other Channel connections, until the ultimate PVSD improvements have been completed. Based upon our analysis a 42-inch storm drain downstream and 36-inch storm drain upstream will adequately convey the modified flow; the HGL will be below the street and ground surface, and the facilities should provide backbone drainage for the tributary area.

See Appendix C for Line A-C hydraulic calculations and plan and profile.

See Appendix E for Ultimate Perris Valley Storm Drain Channel plans for reference.

Section 2: Impacts to the Perris Valley Storm Drain Channel

Per the area-yield flow analysis, an additional 23.1 cfs will be added upstream to the Perris Valley Storm Drain Channel via Line A-B. This change is insignificant – roughly 0.17% of the peak design flow of the Perris Valley Storm Drain Channel. This is especially inconsequential since variations in the peak flow timing were not considered.

Section 3: Conclusions

Per the hydrologic and hydraulic analyses listed above, we conclude that the revised MDP tributary areas and updated flowrates will not significantly impact the hydraulics of Line A-B. The greatest increase in HGL is only 6-inches, which remains well under the Rider Street pavement surface. The change in HGL at other

stations was either negligible or decreased. Also, the proposed alignment and profile of Line A-C will work hydraulically with the updated flow rates.

The Perris Valley Storm Drain Channel will not be impacted hydraulically since the increase in tributary flow reallocated upstream is one-one thousandth of a percent of the 100-year design flow per the MDP. Finally, this update is consistent with the forthcoming impacts of RCTC's Mid County Parkway to the original MDP drainage areas. It is our understanding through preliminary correspondence with Mark Lancaster at RCTC, that Mid County Parkway will accommodate their own generated runoff by constructing and draining to MDP facility Line H.

Should you have any questions regarding this analysis, please give me a call at (951) 320-6039 or email me at tyler.webb@webbassociates.com

Appendix A: Original and Revised Hydrology

SEE PERRIS VALLEY HYDROLOGY FOR LATERAL H-1

PERRIS BLVD.

SINCLAIR STREET

EXISTING N'LY 1/2 OF SINCLAIR

FLOW IN STREET

FLOW IN STREET

EXISTING RIBBON GUTTER

FLOW

EXISTING VEGETATED SWALE

FLOW

SPILLOVER FROM CHANNEL (TO NORTH)

FLOW

FLOW

100

5.00 AC.

6.20 AC.

5.80 AC.

6.00 AC.

6.60 AC.

7.10 AC.

103 Q100=38.2 CFS Tc=18.6 MIN.

101 Q100=12.7 CFS Tc=12.5 MIN.

102 Q100=25.5 CFS Tc=15.8 MIN.

190

191 Q100=13.0 CFS Tc=8.3 MIN.

192 Q100=27.5 CFS Tc=10.4 MIN.

193 Q100=40.3 CFS Tc=11.8 MIN.

3.90 AC.

104 Q100=62.0 CFS Tc=19.7 MIN.

13.7 AC.

13.1 AC.

194 Q100=72.0 CFS Tc=15.4 MIN.

120

170

171 Q100=5.0 CFS Q(in basin)=6.8 CFS Tc=10.8 MIN.

2.70 AC.

2.30 AC.

4.20 AC.

2.20 AC.

4 Q100=133.3 CFS Tc=18.5 MIN.

121 Q100=6.0 CFS Tc=11.4 MIN.

122 Q100=10.5 CFS Q(in basin)=9.4 CFS Tc=14.8 MIN.

123 Q100(conf)=164.5 CFS Tc=20.8 MIN.

130 140 1.1 CFS FLOWBY

LAT. "A-18"

LAT. "A-16"

124 Q100=225.6 CFS Tc=21.3 MIN.

141 Q100=8.3 CFS "A-14" Q(in basin)=7.6 CFS Tc=14.9 MIN.

132 Q100=227.2 CFS Tc=22.6 MIN.

Q100=234.1 CFS Tc=22.7 MIN.

142

Q100=277.4 CFS Tc=22.8 MIN. 1.8 CFS FLOWBY

154

Q100=282.1 CFS Tc=23.3 MIN.

172

LAT. "A-9"

LAT. "A-11"

LAT. "A-20"

RIDER STREET

0.70 AC.

LAT. "A-17" 11.5 CFS FLOWBY

LAT. "A-15"

LAT. "A-13" 6.5 CFS FLOWBY

0.70 AC.

LAT. "A-12"

111 Q100=6.3 CFS Tc=11.8 MIN.

113 Q100=155.4 CFS Tc=20.8 MIN.

112 Q100=25.2 CFS Q(in basin)=13.7 CFS Tc=15.5 MIN.

LAT. "A-19"

1.00 AC.

131 Q100=2.0 CFS Q(in basin)=7.0 CFS Tc=14.8 MIN.

160 162 Q100=278.5 CFS Tc=23.3 MIN. Q100=1.7 CFS Q(in basin)=8.2 CFS Tc=10.2 MIN. 161

LAT. "A-10"

181 Q100=15.4 CFS Tc=15.4 MIN.

201

Q100=355 Tc=23.7

Q100=294 Tc=23.6

2.90 AC.

9.70 AC.

153 Q100=49.4 CFS Tc=28.4 MIN.

7.90 AC.

80 110

9.6 AC.

4.40 AC.

3.60 AC.

151 Q100=29.6 CFS Tc=24.9 MIN.

152 Q100=35.1 CFS Tc=26.0 MIN.

2.90 AC.

180

200

90

2.10 AC.

91 Q100=4.0 CFS Tc=14.2 MIN.

1.80 AC.

REDLANDS AVENUE

Q100=5.9 CFS Tc=12.3 MIN.

81

92 Q100=22.5 CFS Tc=23.5 MIN.

0.10 AC.

Q100=22.7 CFS Tc=24.4 MIN.

93

4.20 AC.

2.20 AC.

82 Q100=12.8 CFS Tc=19.5 MIN.

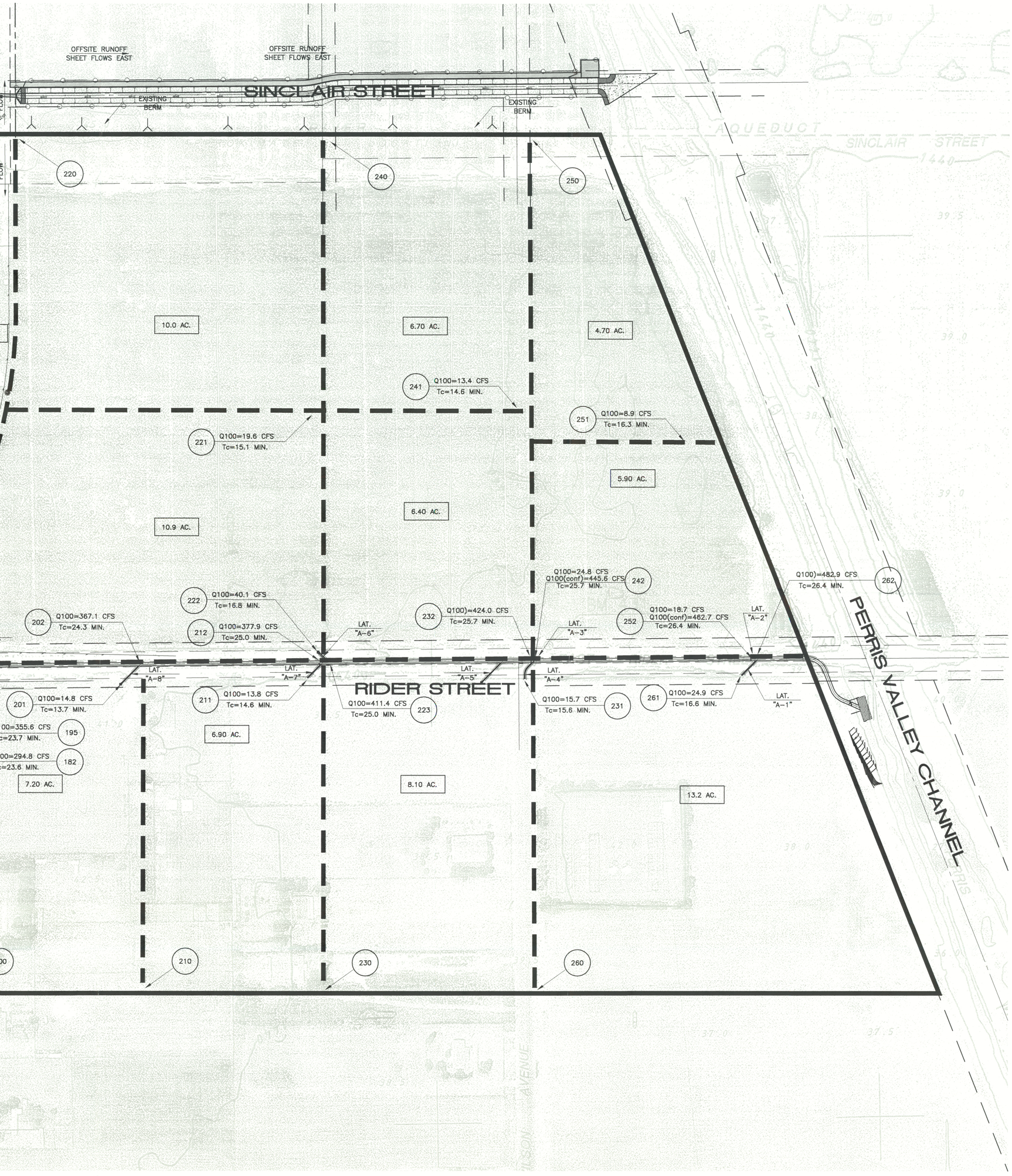

LEGEND

- PROJECT BOUNDARY
- SUBAREA BOUNDARY
- 1.00 AC. — SUBAREA AREA
- (100) — NODE NUMBER
- ANTICIPATED PONDING AREA

0 50 100 200 300

SCALE:1"=100'

Last Update: 8/26/09
G:\2700-2799\2702\2702-hyd-mtd-box.dwg

CITY OF PERRIS
PUBLIC WORKS DEPARTMENT

HYDROLOGY MAP
PROPOSED CONDITIONS

PERRIS VALLEY MDP
LINE A-B (RIDER ST.)

Thienes Engineering, Inc.
CIVIL ENGINEERING • LAND SURVEYING
14349 FIRESTONE BOULEVARD
LA MIRADA, CALIFORNIA 90638
PH.(714)521-4811 FAX(714)521-4173

Designed by _____ Date _____
Checked by _____ Date _____
Designed by _____ Date _____
Checked by _____ Date _____

Aproved by _____ Date _____

Public Works Director _____ R.C.E. 28129

Sheet 2 of 2 Sheets

2702/ 2 OF 2 SHEET

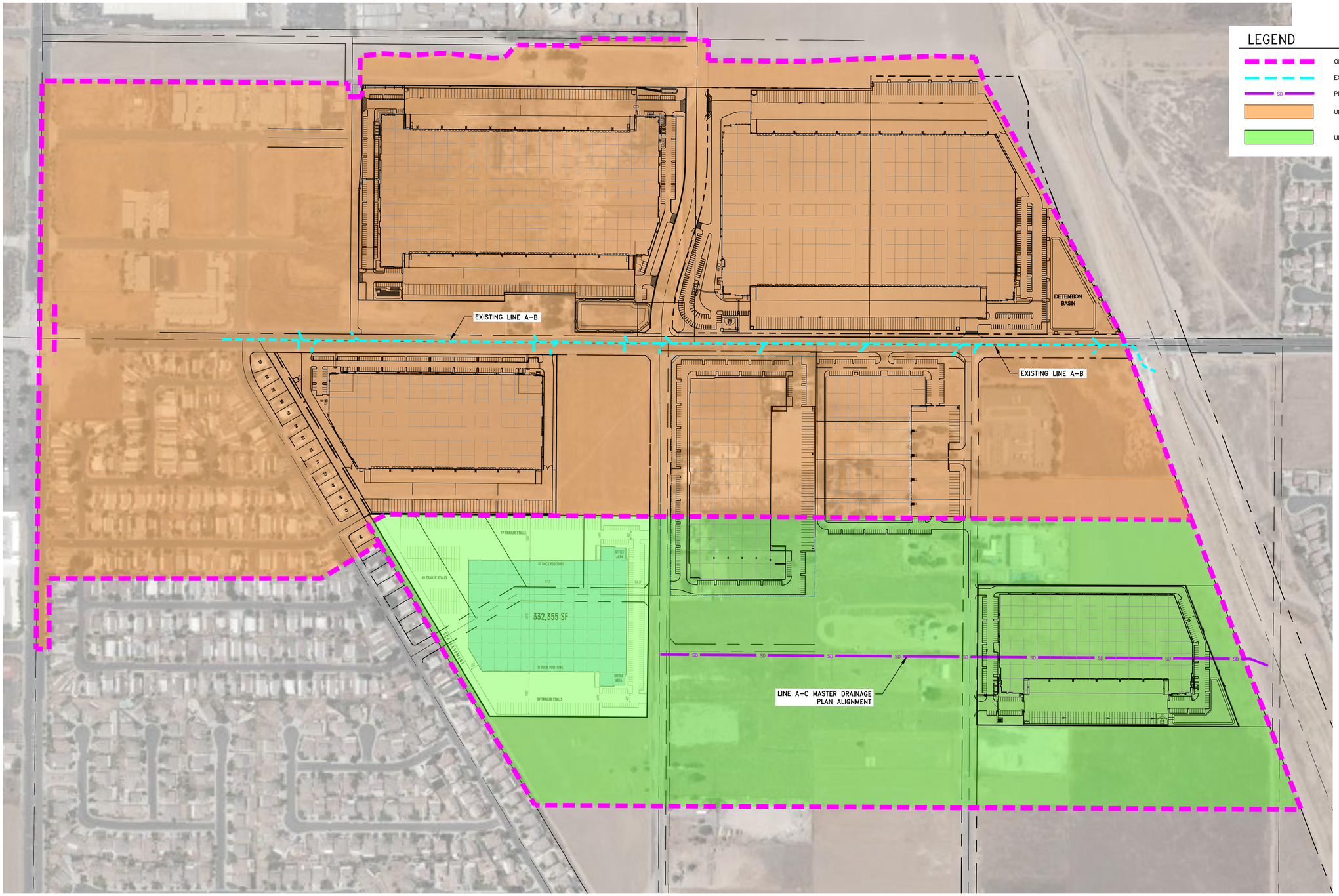

N
W WEBB E
S

1" = 200'

100 0 200 400 600

CITY OF PERRIS

LINE A–B, LINE A–C ORIGINAL TRIBUTARIES

SCALE: AS SHOWN	ALBERT A. WEBB ASSOCIATES	W.O. 18–0305
DATE: 1/30/20	ENGINEERING CONSULTANTS 3788 McCRAY STREET RIVERSIDE CA. 92506 PH. (951) 686–1070 FAX (951) 788–1256	SHEET 1
DESIGNED: TSW		OF 2 SHEETS
CHECKED: DJA		DWG. NO.
PLN CK REF:		
F.B.		

G:\2018\18-0305\DRAINAGE\PHYD\DWG FOLDER\LINEAB_LINEAC_TRIBUTARIES.DWG 1/29/2020 6:09:16 PM

XYZ DRW

LEGEND

- PROPOSED LINE A–B BOUNDARY
- PROPOSED LINE A–C BOUNDARY
- PROJECT BOUNDARIES
- EXISTING STORM DRAIN
- PLANNED STORM DRAIN (SD)
- UNDEVELOPED/DEVELOPED AREA CURRENTLY TRIBUTARY TO LINE A–B
- RIDER DISTRIBUTION CENTER III – MITIGATES FLOWS FROM 72 CFS TO 8 CFS
- AREA PROPOSED TRIBUTARY TO LINE A–C
- UNDEVELOPED AREA PROPOSED TRIBUTARY TO LATERAL AB–10
- UNDEVELOPED AREA PROPOSED TRIBUTARY TO LATERAL AB–7
- UNDEVELOPED AREA PROPOSED TRIBUTARY TO LATERAL AB–4
- RCTC MID COUNTY PARKWAY IMPACT AREA
- 10.0 — DRAINAGE AREA

RIDER DISTRIBUTION CENTER III PROJECT TRIBUTARY TO LATERAL AB–9
(CONSTRUCTED)
37.2
Q_{100}= 8.0 CFS

RIDER DISTRIBUTION CENTER II PROJECT TRIBUTARY TO LATERAL AB–2
DPR NO. 19–00004
42.2

EX. LAT AB–9
OLD=61.0 CFS
NEW=8.0 CFS

EX. LAT AB–6
OLD=32.7 CFS
NEW=0.0 CFS

EX. LAT AB–3
OLD=20.2 CFS
NEW=0.0 CFS

DETENTION BASIN

EX. LAT AB–2
OLD=15.9 CFS
NEW=87.0 CFS

EX. LINE A–B

RIDER DISTRIBUTION CENTER I PROJECT TRIBUTARY TO LATERAL AB–13
(CONSTRUCTED)
17.4

EX. LAT AB–10
OLD=13.0 CFS
NEW=48.0 CFS

7.8
PROP. LAT AB–10 EXTENSION

EX. LAT AB–8
OLD=11.0 CFS
NEW=0.0 CFS

PROP. LAT AB–7.5
OLD=0.0 CFS
NEW=34.6 CFS

EX. LAT AB–7
OLD=11.3 CFS
NEW=0.0 CFS

EX. LAT AB–5
OLD=2.0 CFS
NEW=0.0 CFS

EX. LAT AB–1
NO CHANGE

EX. LAT AB–4
OLD=12.8 CFS
NEW=25.0 CFS

EX. LINE A–B OUTLET
OLD=483.0 CFS
*NEW=506.1 CFS

FIRST RIDER INDUSTRIAL PROJECT TRIBUTARY TO LATERAL AB–7
DPR NO. 19–05161
17.3
Q_{100}=(17.3 ACRES * 2.0 CFS/ACRE) = 34.6 CFS

CORE 5 RIDER INDUSTRIAL PROJECT TRIBUTARY TO LATERAL AB–4
DPR NO. 19–05267
12.5
Q_{100}=(12.5 ACRES * 2.0 CFS/ACRE) = 25.0 CFS

9.6
Q_{100}=(9.6 ACRES * 2.0 CFS/ACRE) = 19.2 CFS

PROP. LINE A–C

LINE A–C TRIBUTARY TOTALS
72.6 CFS

IPT – REDLANDS PROJECT TRIBUTARY TO LAT AB–10
16.3
Q_{100}=(16.3 ACRES * 2.0 CFS/ACRE) = 32.6 CFS

PROPOSED AREA TRIBUTARY TO LINE A–C
11.1
Q_{100}=(11.1 ACRES * 2.0 CFS/ACRE) = 22.2 CFS

FIRST WILSON INDUSTRIAL PROJECT TRIBUTARY TO LINE A–C
DPR NO. 19–00007
15.6
Q_{100}=(15.6 ACRES * 2.0 CFS/ACRE) = 31.2 CFS

LOTS TRIBUTARY TO PVSD

MID COUNTY PARKWAY IMPACT AREA, PARKWAY WILL DRAIN TO AND CONSTRUCT LINE H

***NOTE**
NEW OUTLET FLOWRATE IS GREATER THAN OLD OUTLET FLOWRATE BECAUSE OF AREA–YIELD FLOW REALLOCATION METHOD. THIS WAS DONE TO BE MORE CONSERVATIVE IN THE REVISED HYDRAULIC MODEL EVALUATION. THE AREA–YIELD METHOD IS MORE CONSERVATIVE BECAUSE IT IGNORES STREAM CONFLUENCES WHICH CAN LOWER THE TRIBUTARY FLOWRATES.

N W E S WEBB

1" = 200'
100 0 200 400 600

CITY OF PERRIS

LINE A–B, LINE A–C PROPOSED TRIBUTARIES

SCALE: AS SHOWN	W.O. 18–0305
DATE: 1/30/20	SHEET 2
DESIGNED: TSW	OF 2 SHEETS
CHECKED: DJA	
PLN CK REF:	DWG. NO.
F.B.	

ALBERT A. WEBB ASSOCIATES
ENGINEERING CONSULTANTS
3788 McCRAY STREET
RIVERSIDE, CA. 92506
PH. (951) 686–1070
FAX (951) 788–1256

G:\2018\18–0305\DRAINAGE\PHYDO\DWG FOLDER\LINEAR_LINEAC_TRIBUTARIES.DWG 1/29/2020 6:09:16 PM
TSW

Appendix B: Line A-B Original and Revised Hydraulics, Plan and Profile

```
T1 LINE A-B HYDRAULIC MODEL - ORIGINAL TRIBUTARIES

T2 FN:LINEABORIGINAL.WSW
SO    997.6001426.790  1                          1433.000
R    1019.8401426.870  1      .013                                .000    .000 0
R    1055.1801426.990  1      .014                              45.000    .000 0
R    1099.8201427.160  1      .013                                .000    .000 0
R    1154.0801427.350  1      .014                             -69.080    .000 0
R    1263.3301427.730  1      .013                                .000    .000 1
JX   1263.3301427.740  1  3   .013   21.100         1428.810       -45.0        0.000
REM  EXISTING TRIBUTARY TO LATERAL AB-1
R    1275.3301427.760  1      .013                                .000    .000 0
JX   1275.3301427.770  1  2   .013   15.900         1428.840        45.0        0.000
REM  EXISTING TRIBUTARY TO LATERAL AB-2
R    1758.8201429.460  1      .013                                .000    .000 0
JX   1758.8201429.470  1  3   .013   20.200         1430.540        45.0        0.000
REM  EXISTING TRIBUTARY TO LATERAL AB-3
R    1771.5101429.500  1      .013                                .000    .000 1
JX   1777.5101430.000  7  2   .013   12.800         1430.000       -45.0        0.000
REM  EXISTING TRIBUTARY TO LATERAL AB-4
R    1841.8901430.190  7      .013                                .000    .000 0
JX   1841.8901430.200  7  8   .013    2.000         1431.690       -45.0        0.000
REM  EXISTING TRIBUTARY TO LATERAL AB-5
R    2236.2101431.380  7      .013                                .000    .000 1
JX   2236.2101431.390  7  6   .013   32.700         1431.970        45.0        0.000
REM  EXISTING TRIBUTARY TO LATERAL AB-6
R    2249.4101431.420  7      .013                                .000    .000 0
JX   2249.4101431.430  7  2   .013   11.300         1432.000       -45.0        0.000
REM  EXISTING TRIBUTARY TO LATERAL AB-7
R    2690.0001432.740  7      .013                                .000    .000 1
JX   2690.0001432.750  7  2   .013   11.000         1433.830       -60.0        0.000
REM  EXISTING TRIBUTARY TO LATERAL AB-8
R    3083.4901433.930  7      .013                                .000    .000 1
JX   3093.9301433.960  4  9   .013   61.000         1434.520        45.0        0.000
REM  EXISTING TRIBUTARY TO LATERAL AB-9
R    3116.4701434.030  4      .013                                .000    .000 0
JX   3116.4701434.040  4  2   .013   13.000         1434.620        45.0        0.000
REM  EXISTING TRIBUTARY TO LATERAL AB-10
R    3271.3701434.490  4      .013                                .000    .000 1
SH   3271.3701434.490  4                          1434.490
CD   2  4   1    .000   2.000     .000  .000  .000   .00
CD   3  4   1    .000   2.500     .000  .000  .000   .00
CD   6  4   1    .000   3.000     .000  .000  .000   .00
CD   8  4   1    .000   1.500     .000  .000  .000   .00
CD   9  4   1    .000   3.500     .000  .000  .000   .00
CD   1  6   0    .000             .00   .00   .00   .00   .00   .00   .00   .00   .00   .00   .00
CD   4  6   0    .000             .00   .00   .00   .00   .00   .00   .00   .00   .00   .00   .00
CD   5  6   0    .000             .00   .00   .00   .00   .00   .00   .00   .00   .00   .00   .00
CD   6  6   0    .000             .00   .00   .00   .00   .00   .00   .00   .00   .00   .00   .00
CD   7  6   0    .000             .00   .00   .00   .00   .00   .00   .00   .00   .00   .00   .00
PTS  1 8  1.000  7.330  1.000  1.670  1.670  1.000  8.330  1.000  9.000  1.670
PTS       9.000  7.330  8.330  8.000  1.670  8.000
PTS  4 8  1.000  5.330  1.000  1.670  1.670  1.000  7.330  1.000  8.000  1.670
PTS       8.000  5.330  7.330  6.000  1.670  6.000
PTS  5 8  1.000  4.830  1.000  1.670  1.670  1.000  7.330  1.000  8.000  1.670
PTS       8.000  4.830  7.330  5.500  1.670  5.500
PTS  6 8  1.000  4.420  1.000  1.580  1.580  1.000  6.420  1.000  7.000  1.580
PTS       7.000  4.420  6.420  5.000  1.580  5.000
PTS  7 8  1.000  6.330  1.000  1.670  1.670  1.000  8.330  1.000  9.000  1.670
PTS       9.000  6.330  8.330  7.000  1.670  7.000
Q           282.000   .0
```

WATER SURFACE PROFILE - CHANNEL DEFINITION LISTING

CARD CODE	SECT NO	CHN TYPE	NO OF PIER/PIP	AVE PIER WIDTH	HEIGHT 1 DIAMETER	BASE WIDTH	ZL	ZR	INV DROP	Y(1)	Y(2)	Y(3)	Y(4)	Y(5)	Y(6)	Y(7)	Y(8)	Y(9)	Y(10)
CD	2	4	1		2.000														
CD	3	4	1		2.500														
CD	6	4	1		3.000														
CD	8	4	1		1.500														
CD	9	4	1		3.500														
CD	1	6	0	.000															
CD	4	6	0	.000															
CD	5	6	0	.000															
CD	6	6	0	.000															
CD	7	6	0	.000															

WATER SURFACE PROFILE - CROSS SECTION POINT LISTING

CARD CODE	SECT NO	NO OF POINTS	X(1) , Y(1)		X(2) , Y(2)		X(3) , Y(3)		X(4) , Y(4)		X(5) , Y(5)		X(6) , Y(6)		X(7) , Y(7)		X(8) , Y(8)		X(9) , Y(9)		X(10) ,Y(10)		X(11) ,Y(11)		X(N) , Y(N)		X(N+1),Y(N+1)		X(35) ,Y(35)	
PTS	1	8	1.000	7.330	1.000	1.670	1.670	1.000	8.330	1.000	9.000	1.670	9.000	7.330	8.000															
PTS			1.670	8.000																										
PTS	4	8	1.000	5.330	1.000	1.670	1.670	1.000	7.330	1.000	8.000	1.670	8.000	5.330	7.330	6.000														
PTS			1.670	6.000																										
PTS	5	8	1.000	4.830	1.000	1.670	1.670	1.000	7.330	1.000	8.000	1.670	8.000	4.830	7.330	5.500														
PTS			1.670	5.500																										
PTS	6	8	1.000	4.420	1.000	1.580	1.580	1.000	6.420	1.000	7.000	1.580	7.000	4.420	6.420	5.000														
PTS			1.580	5.000																										
PTS	7	8	1.000	6.330	1.000	1.670	1.670	1.000	8.330	1.000	9.000	1.670	9.000	6.330	8.330	7.000														
PTS			1.670	7.000																										

W S P G W

WATER SURFACE PROFILE - TITLE CARD LISTING

HEADING LINE NO 1 IS -

LINE A-B HYDRAULIC MODEL - ORIGINAL TRIBUTARIES

HEADING LINE NO 2 IS -

FN:LINEABORIGINAL.WSW

HEADING LINE NO 3 IS -

W S P G W

WATER SURFACE PROFILE - ELEMENT CARD LISTING

ELEMENT NO 1 IS A SYSTEM OUTLET * *

U/S DATA	STATION	INVERT	SECT	W S ELEV
	997.600	1426.790	1	1433.000

ELEMENT NO 2 IS A REACH * * *

U/S DATA	STATION	INVERT	SECT	N	RADIUS	ANGLE	ANG PT	MAN H
	1019.840	1426.870	1	.013	.000	.000	.000	0

ELEMENT NO 3 IS A REACH * * *

U/S DATA	STATION	INVERT	SECT	N	RADIUS	ANGLE	ANG PT	MAN H
	1055.180	1426.990	1	.014	44.996	45.000	.000	0

ELEMENT NO 4 IS A REACH * * *

U/S DATA	STATION	INVERT	SECT	N	RADIUS	ANGLE	ANG PT	MAN H
	1099.820	1427.160	1	.013	.000	.000	.000	0

ELEMENT NO 5 IS A REACH * * *

U/S DATA	STATION	INVERT	SECT	N	RADIUS	ANGLE	ANG PT	MAN H
	1154.080	1427.350	1	.014	45.004	-69.080	.000	0

ELEMENT NO 6 IS A REACH * * *

U/S DATA	STATION	INVERT	SECT	N	RADIUS

```
   ANGLE     ANG PT  MAN H
                                1263.330 1427.730    1               .013                        .000
   .000      .000     1
  ELEMENT NO   7 IS A JUNCTION          *         *     *     *                *                  *
           *
                      U/S DATA   STATION    INVERT  SECT LAT-1 LAT-2   N      Q3         Q4     INVERT-3
INVERT-4  PHI 3  PHI 4
                                1263.330 1427.740    1     3     0   .013    21.100       .000  1428.810
    .000 -45.000     .000
                                                                                              RADIUS
   ANGLE
                                                                                               .000
   .000
  REMARKS:   EXISTING TRIBUTARY TO LATERAL AB-1

  ELEMENT NO   8 IS A REACH             *         *     *
                      U/S DATA   STATION    INVERT  SECT               N                       RADIUS
   ANGLE     ANG PT  MAN H
                                1275.330 1427.760    1               .013                        .000
   .000      .000     0
  ELEMENT NO   9 IS A JUNCTION          *         *     *     *                *                  *
           *
                      U/S DATA   STATION    INVERT  SECT LAT-1 LAT-2   N      Q3         Q4     INVERT-3
INVERT-4  PHI 3  PHI 4
                                1275.330 1427.770    1     2     0   .013    15.900       .000  1428.840
    .000  45.000     .000
                                                                                              RADIUS
   ANGLE
                                                                                               .000
   .000
                                                          W S P G W
            PAGE NO   3
                           WATER SURFACE PROFILE - ELEMENT CARD LISTING
  REMARKS:   EXISTING TRIBUTARY TO LATERAL AB-2

  ELEMENT NO  10 IS A REACH             *         *     *
                      U/S DATA   STATION    INVERT  SECT               N                       RADIUS
   ANGLE     ANG PT  MAN H
                                1758.820 1429.460    1               .013                        .000
   .000      .000     0
  ELEMENT NO  11 IS A JUNCTION          *         *     *     *                *                  *
           *
                      U/S DATA   STATION    INVERT  SECT LAT-1 LAT-2   N      Q3         Q4     INVERT-3
INVERT-4  PHI 3  PHI 4
                                1758.820 1429.470    1     3     0   .013    20.200       .000  1430.540
    .000  45.000     .000
                                                                                              RADIUS
   ANGLE
                                                                                               .000
   .000
  REMARKS:   EXISTING TRIBUTARY TO LATERAL AB-3

  ELEMENT NO  12 IS A REACH             *         *     *
                      U/S DATA   STATION    INVERT  SECT               N                       RADIUS
   ANGLE     ANG PT  MAN H
                                1771.510 1429.500    1               .013                        .000
   .000      .000     1
  ELEMENT NO  13 IS A JUNCTION          *         *     *     *                *                  *
           *
                      U/S DATA   STATION    INVERT  SECT LAT-1 LAT-2   N      Q3         Q4     INVERT-3
INVERT-4  PHI 3  PHI 4
                                1777.510 1430.000    7     2     0   .013    12.800       .000  1430.000
    .000 -45.000     .000
                                                                                              RADIUS
   ANGLE
                                                                                               .000
   .000
  REMARKS:   EXISTING TRIBUTARY TO LATERAL AB-4

  ELEMENT NO  14 IS A REACH             *         *     *
                      U/S DATA   STATION    INVERT  SECT               N                       RADIUS
   ANGLE     ANG PT  MAN H
                                1841.890 1430.190    7               .013                        .000
   .000      .000     0
  ELEMENT NO  15 IS A JUNCTION          *         *     *     *                *                  *
           *
                      U/S DATA   STATION    INVERT  SECT LAT-1 LAT-2   N      Q3         Q4     INVERT-3
INVERT-4  PHI 3  PHI 4
                                1841.890 1430.200    7     8     0   .013     2.000       .000  1431.690
```

.000 -45.000 .000

RADIUS

ANGLE

.000

.000

W S P G W

WATER SURFACE PROFILE - ELEMENT CARD LISTING

REMARKS: EXISTING TRIBUTARY TO LATERAL AB-5

ELEMENT NO 16 IS A REACH * * *

	U/S DATA	STATION	INVERT	SECT		N		RADIUS
ANGLE	ANG PT	MAN H						
		2236.210	1431.380	7		.013		.000
.000	.000	1						

ELEMENT NO 17 IS A JUNCTION * * * * * *

	U/S DATA	STATION	INVERT	SECT	LAT-1	LAT-2	N	Q3	Q4	INVERT-3
INVERT-4	PHI 3	PHI 4								
		2236.210	1431.390	7	6	0	.013	32.700	.000	1431.970
.000	45.000	.000								

RADIUS

ANGLE

.000

.000

REMARKS: EXISTING TRIBUTARY TO LATERAL AB-6

ELEMENT NO 18 IS A REACH * * *

	U/S DATA	STATION	INVERT	SECT		N		RADIUS
ANGLE	ANG PT	MAN H						
		2249.410	1431.420	7		.013		.000
.000	.000	0						

ELEMENT NO 19 IS A JUNCTION * * * * * *

	U/S DATA	STATION	INVERT	SECT	LAT-1	LAT-2	N	Q3	Q4	INVERT-3
INVERT-4	PHI 3	PHI 4								
		2249.410	1431.430	7	2	0	.013	11.300	.000	1432.000
.000	-45.000	.000								

RADIUS

ANGLE

.000

.000

REMARKS: EXISTING TRIBUTARY TO LATERAL AB-7

ELEMENT NO 20 IS A REACH * * *

	U/S DATA	STATION	INVERT	SECT		N		RADIUS
ANGLE	ANG PT	MAN H						
		2690.000	1432.740	7		.013		.000
.000	.000	1						

ELEMENT NO 21 IS A JUNCTION * * * * * *

	U/S DATA	STATION	INVERT	SECT	LAT-1	LAT-2	N	Q3	Q4	INVERT-3
INVERT-4	PHI 3	PHI 4								
		2690.000	1432.750	7	2	0	.013	11.000	.000	1433.830
.000	-60.000	.000								

RADIUS

ANGLE

.000

.000

W S P G W

WATER SURFACE PROFILE - ELEMENT CARD LISTING

REMARKS: EXISTING TRIBUTARY TO LATERAL AB-8

ELEMENT NO 22 IS A REACH * * *

	U/S DATA	STATION	INVERT	SECT		N		RADIUS
ANGLE	ANG PT	MAN H						
		3083.490	1433.930	7		.013		.000
.000	.000	1						

ELEMENT NO 23 IS A JUNCTION * * * * * *

	U/S DATA	STATION	INVERT	SECT	LAT-1	LAT-2	N	Q3	Q4	INVERT-3
INVERT-4	PHI 3	PHI 4								
		3093.930	1433.960	4	9	0	.013	61.000	.000	1434.520
.000	45.000	.000								

RADIUS

ANGLE

.000

.000

```
 REMARKS:   EXISTING TRIBUTARY TO LATERAL AB-9

 ELEMENT NO  24 IS A REACH              *         *     *
                    U/S DATA   STATION    INVERT  SECT               N                          RADIUS
  ANGLE     ANG PT  MAN H
                               3116.470 1434.030    4               .013                           .000
  .000       .000     0
 ELEMENT NO  25 IS A JUNCTION           *         *     *     *                *                  *
          *
                    U/S DATA   STATION    INVERT  SECT LAT-1 LAT-2   N      Q3         Q4      INVERT-3
INVERT-4   PHI 3   PHI 4
                               3116.470 1434.040    4     2     0   .013    13.000       .000  1434.620
    .000  45.000     .000
                                                                                               RADIUS
  ANGLE
                                                                                                .000
  .000
 REMARKS:   EXISTING TRIBUTARY TO LATERAL AB-10

 ELEMENT NO  26 IS A REACH              *         *     *
                    U/S DATA   STATION    INVERT  SECT               N                          RADIUS
  ANGLE     ANG PT  MAN H
                               3271.370 1434.490    4               .013                           .000
  .000       .000     1
 ELEMENT NO  27 IS A SYSTEM HEADWORKS                  *                     *
                    U/S DATA   STATION    INVERT  SECT                                      W S ELEV
                               3271.370 1434.490    4                                     1434.490
```

Program Package Serial Number: 1585

WATER SURFACE PROFILE LISTING Date: 1-27-2020 Time:10:17:40

LINE A-B HYDRAULIC MODEL - ORIGINAL TRIBUTARIES

FN:LINEABORIGINAL.WSW

Station	Invert Elev	Depth (FT)	Water Elev	Q (CFS)	Vel (FPS)	Vel Head	Energy Grd.El.	Super Elev	Critical Depth	Flow Top Width	Height/ Dia.-FT	Base Wt or I.D.	ZL	No Wth Prs/Pip
L/Elem	Ch Slope					SF Ave	HF	SE Dpth	Froude N	Norm Dp	"N"	X-Fall	ZR	Type Ch
997.600	1426.790	6.210	1433.000	483.00	9.81	1.49	1434.49	.00	4.89	8.00			1	0 .0
22.240	.0036					.0022	.05	6.21	.70	5.090	.013			IR-COV
1019.840	1426.870	6.148	1433.018	483.00	9.91	1.53	1434.54	.31	4.89	8.00			1	0 .0
35.340	.0034					.0026	.09	6.46	.71	5.512	.014			IR-COV
1055.180	1426.990	6.092	1433.082	483.00	10.00	1.55	1434.64	.00	4.89	8.00			1	0 .0
44.640	.0038					.0023	.10	6.09	.72	4.978	.013			IR-COV
1099.820	1427.160	5.951	1433.111	483.00	10.24	1.63	1434.74	.33	4.89	8.00			1	0 .0
54.260	.0035					.0028	.15	6.28	.74	5.447	.014			IR-COV
1154.080	1427.350	5.869	1433.219	483.00	10.39	1.67	1434.89	.00	4.89	8.00			1	0 .0
109.250	.0035					.0025	.27	5.87	.76	5.155	.013			IR-COV
1263.330	1427.730	5.631	1433.361	483.00	10.83	1.82	1435.18	.00	4.89	8.00			1	0 .0
JUNCT STR	.0000					.0020	.00	5.63	.81		.013			IR-COV

---------- WARNING - Junction Analysis - Irregular Channel----------

1263.330	1427.740	6.144	1433.884	461.90	9.48	1.40	1435.28	.00	4.75	8.00			1	0 .0
12.000	.0017					.0020	.02	6.14	.68	6.729	.013			IR-COV
1275.330	1427.760	6.152	1433.912	461.90	9.47	1.39	1435.31	.00	4.75	8.00			1	0 .0
JUNCT STR	.0000					.0017	.00	6.15	.68		.013			IR-COV

---------- WARNING - Junction Analysis - Irregular Channel----------

Program Package Serial Number: 1585

WATER SURFACE PROFILE LISTING Date: 1-27-2020 Time:10:17:40

LINE A-B HYDRAULIC MODEL - ORIGINAL TRIBUTARIES

FN:LINEABORIGINAL.WSW

Station	Invert Elev	Depth (FT)	Water Elev	Q (CFS)	Vel (FPS)	Vel Head	Energy Grd.El.	Super Elev	Critical Depth	Flow Top Width	Height/ Dia.-FT	Base Wt or I.D.	ZL	No Wth Prs/Pip
L/Elem	Ch Slope					SF Ave	HF	SE Dpth	Froude N	Norm Dp	"N"	X-Fall	ZR	Type Ch
1275.330	1427.770	6.385	1434.155	446.00	8.81	1.20	1435.36	.00	4.64	7.89		1		0 .0
104.973	.0035					.0017	.18	6.39	.61	4.839	.013			IR-COV
1380.303	1428.137	6.090	1434.227	446.00	9.24	1.33	1435.55	.00	4.64	8.00		1		0 .0
103.418	.0035					.0019	.20	6.09	.66	4.839	.013			IR-COV
1483.721	1428.498	5.809	1434.307	446.00	9.69	1.46	1435.77	.00	4.64	8.00		1		0 .0
104.189	.0035					.0022	.23	5.81	.71	4.839	.013			IR-COV
1587.911	1428.863	5.541	1434.404	446.00	10.16	1.60	1436.01	.00	4.64	8.00		1		0 .0
108.172	.0035					.0025	.27	5.54	.76	4.839	.013			IR-COV
1696.083	1429.241	5.286	1434.527	446.00	10.66	1.76	1436.29	.00	4.64	8.00		1		0 .0
62.737	.0035					.0028	.17	5.29	.82	4.839	.013			IR-COV
1758.820	1429.460	5.156	1434.616	446.00	10.93	1.86	1436.47	.00	4.64	8.00		1		0 .0
JUNCT STR	.0000					.0020	.00	5.16	.85		.013			IR-COV
		---------- WARNING - Junction Analysis - Irregular Channel----------												
1758.820	1429.470	5.745	1435.215	425.80	9.36	1.36	1436.57	.00	4.50	8.00		1		0 .0
12.690	.0024					.0020	.03	5.75	.69	5.428	.013			IR-COV

Program Package Serial Number: 1585

WATER SURFACE PROFILE LISTING Date: 1-27-2020 Time:10:17:40

LINE A-B HYDRAULIC MODEL - ORIGINAL TRIBUTARIES

FN:LINEABORIGINAL.WSW

Station	Invert Elev	Depth (FT)	Water Elev	Q (CFS)	Vel (FPS)	Vel Head	Energy Grd.El.	Super Elev	Critical Depth	Flow Top Width	Height/ Dia.-FT	Base Wt or I.D.	ZL	No Wth Prs/Pip
L/Elem	Ch Slope					SF Ave	HF	SE Dpth	Froude N	Norm Dp	"N"	X-Fall	ZR	Type Ch
1771.510	1429.500	5.738	1435.238	425.80	9.37	1.36	1436.60	.00	4.50	8.00		1		0 .0
JUNCT STR	.0833					.0021	.01	5.74	.69		.013			IR-COV
			WARNING - Junction Analysis - Irregular Channel											
1777.510	1430.000	4.966	1434.966	413.00	10.51	1.72	1436.68	.00	4.41	8.00		7		0 .0
64.380	.0030					.0028	.18	4.97	.84	4.869	.013			IR-COV
1841.890	1430.190	4.939	1435.129	413.00	10.57	1.74	1436.86	.00	4.41	8.00		7		0 .0
JUNCT STR	.0000					.0027	.00	4.94	.84		.013			IR-COV
			WARNING - Junction Analysis - Irregular Channel											
1841.890	1430.200	5.010	1435.210	411.00	10.37	1.67	1436.88	.00	4.40	8.00		7		0 .0
372.403	.0030					.0027	1.01	5.01	.82	4.824	.013			IR-COV
2214.293	1431.314	4.824	1436.138	411.00	10.78	1.80	1437.94	.00	4.40	8.00		7		0 .0
21.917	.0030					.0030	.07	4.82	.87	4.824	.013			IR-COV
2236.210	1431.380	4.824	1436.204	411.00	10.78	1.80	1438.01	.00	4.40	8.00		7		0 .0
JUNCT STR	.0000					.0017	.00	4.82	.87		.013			IR-COV
			WARNING - Junction Analysis - Irregular Channel											

LINE A-B HYDRAULIC MODEL - ORIGINAL TRIBUTARIES
FN:LINEABORIGINAL.WSW

Station	Invert Elev	Depth (FT)	Water Elev	Q (CFS)	Vel (FPS)	Vel Head	Energy Grd.El.	Super Elev	Critical Depth	Flow Top Width	Height/ Dia.-FT	Base Wt or I.D.	ZL	No Wth Prs/Pip
L/Elem	Ch Slope					SF Ave	HF	SE Dpth	Froude N	Norm Dp	"N"	X-Fall	ZR	Type Ch
2236.210	1431.390	5.733	1437.123	378.30	8.36	1.09	1438.21	.00	4.17	7.19			7	0 .0
13.200	.0023					.0017	.02	5.73	.59	5.029	.013			IR-COV
2249.410	1431.420	5.721	1437.141	378.30	8.38	1.09	1438.23	.00	4.17	7.22			7	0 .0
JUNCT STR	.0000					.0015	.00	5.72	.59		.013			IR-COV
---------- WARNING - Junction Analysis - Irregular Channel----------														
2249.410	1431.430	5.862	1437.292	367.00	7.95	.98	1438.27	.00	4.08	6.94			7	0 .0
145.077	.0030					.0015	.22	5.86	.54	4.436	.013			IR-COV
2394.487	1431.861	5.565	1437.426	367.00	8.34	1.08	1438.51	.00	4.08	7.53			7	0 .0
129.256	.0030					.0017	.22	5.57	.61	4.436	.013			IR-COV
2523.743	1432.246	5.302	1437.548	367.00	8.74	1.19	1438.73	.00	4.08	8.00			7	0 .0
127.201	.0030					.0019	.24	5.30	.67	4.436	.013			IR-COV
2650.944	1432.624	5.058	1437.682	367.00	9.17	1.31	1438.99	.00	4.08	8.00			7	0 .0
39.056	.0030					.0021	.08	5.06	.72	4.436	.013			IR-COV
2690.000	1432.740	4.989	1437.729	367.00	9.30	1.34	1439.07	.00	4.08	8.00			7	0 .0
JUNCT STR	.0000					.0018	.00	4.99	.74		.013			IR-COV
---------- WARNING - Junction Analysis - Irregular Channel----------														

Program Package Serial Number: 1585

WATER SURFACE PROFILE LISTING Date: 1-27-2020 Time:10:17:40

LINE A-B HYDRAULIC MODEL - ORIGINAL TRIBUTARIES

FN:LINEABORIGINAL.WSW

Station	Invert Elev	Depth (FT)	Water Elev	Q (CFS)	Vel (FPS)	Vel Head	Energy Grd.El.	Super Elev	Critical Depth	Flow Top Width	Height/ Dia.-FT	Base Wt or I.D.	ZL	No Wth Prs/Pip
L/Elem	Ch Slope					SF Ave	HF	SE Dpth	Froude N	Norm Dp	"N"	X-Fall	ZR	Type Ch
2690.000	1432.750	5.237	1437.987	356.00	8.59	1.15	1439.13	.00	4.00	8.00			7	0 .0
119.113	.0030					.0018	.22	5.24	.67	4.321	.013			IR-COV
2809.113	1433.107	4.995	1438.102	356.00	9.01	1.26	1439.36	.00	4.00	8.00			7	0 .0
127.524	.0030					.0020	.26	5.00	.71	4.321	.013			IR-COV
2936.636	1433.490	4.765	1438.255	356.00	9.45	1.39	1439.64	.00	4.00	8.00			7	0 .0
146.853	.0030					.0023	.34	4.77	.77	4.321	.013			IR-COV
3083.490	1433.930	4.553	1438.483	356.00	9.90	1.52	1440.00	.00	4.00	8.00			7	0 .0
JUNCT STR	.0029					.0033	.03	4.55	.82		.013			IR-COV

---------- WARNING - Junction Analysis - Irregular Channel----------

3093.930	1433.960	5.172	1439.132	295.00	8.65	1.16	1440.29	.00	3.87	5.66			4	0 .0
22.540	.0031					.0033	.07	5.17	.62	4.244	.013			IR-COV
3116.470	1434.030	5.176	1439.206	295.00	8.65	1.16	1440.37	.00	3.87	5.66			4	0 .0
JUNCT STR	.0000					.0030	.00	5.18	.62		.013			IR-COV

---------- WARNING - Junction Analysis - Irregular Channel----------

3116.470	1434.040	5.331	1439.371	282.00	8.27	1.06	1440.43	.00	3.76	5.66			4	0 .0
154.900	.0029					.0030	.46	5.33	.59	4.208	.013			IR-COV

Program Package Serial Number: 1585

WATER SURFACE PROFILE LISTING Date: 1-27-2020 Time:10:17:40

LINE A-B HYDRAULIC MODEL - ORIGINAL TRIBUTARIES

FN:LINEABORIGINAL.WSW

Station	Invert Elev	Depth (FT)	Water Elev	Q (CFS)	Vel (FPS)	Vel Head	Energy Grd.El.	Super Elev	Critical Depth	Flow Top Width	Height/ Dia.-FT	Base Wt or I.D.	ZL	No Wth Prs/Pip
L/Elem	Ch Slope					SF Ave	HF	SE Dpth	Froude N	Norm Dp	"N"	X-Fall	ZR	Type Ch
3271.370	1434.490	5.398	1439.888	282.00	8.27	1.06	1440.95	.00	3.76	5.66		4	0	.0

```
T1 LINE A-B HYDRAULIC MODEL - REVISED TRIBUTARIES
T2 FN:LINEABREVISED.WSW

SO    997.6001426.790  1                          1433.000
R    1019.8401426.870  1      .013                                .000    .000 0
R    1055.1801426.990  1      .014                              45.000    .000 0
R    1099.8201427.160  1      .013                                .000    .000 0
R    1154.0801427.350  1      .014                             -69.080    .000 0
R    1263.3301427.730  1      .013                                .000    .000 1
JX   1263.3301427.740  1  3   .013   21.100         1428.810       -45.0        0.000
REM  TRIBUTARY TO LATERAL AB-1
R    1275.3301427.760  1      .013                                .000    .000 0
JX   1275.3301427.770  1  2   .013   87.000         1428.840        45.0        0.000
REM  REVISED TRIBUTARY TO LATERAL AB-2 FROM RIDER II DISTRIBUTION CENTER,
REM  NO DISCHARGE FROM LATERAL AB-3 AND AB-6
R    1771.5101429.500  1      .013                                .000    .000 1
JX   1777.5101430.000  7  2   .013   25.000         1430.000       -45.0        0.000
REM  REVISED TRIBUTARY TO LATERAL AB-4 FROM CORE 5 RIDER INDUSTRIAL,
REM  NO DISCHARGE FROM LATERAL AB-5 AND AB-7
R    2500.0001432.170  7      .013                                .000    .000 0
JX   2510.0001432.180  7  2   .013   35.000         1432.800       -45.0        0.000
REM  TRIBUTARY TO LATERAL AB-7.5 AND TOTAL RUNOFF FROM FIRST RIDER INDUSTRIAL PROJECT,
REM  NO DISCHARGE FROM LATERAL AB-8
R    3083.4901433.930  7      .013                                .000    .000 1
JX   3093.9301433.960  4  9   .013    8.000         1434.520        45.0        0.000
REM  THE FLOW RATE FOR LATERAL AB-9 HAS BEEN CHANGED TO ACCOUNT FOR PUMPED FLOW LEAVING RIDER 3 SITE
R    3116.4701434.030  4      .013                                .000    .000 0
JX   3116.4701434.040  4  2   .013   48.000         1434.620        45.0        0.000
REM  REVISED TRIBUTARY TO LATERAL AB-10 FROM AREA BETWEEN RIDER I DISTRIBUTION CENTER AND
REM  PROPOSED MID-COUNTY-PARKWAY IMPACT AREA
R    3271.3701434.490  4      .013                                .000    .000 1
SH   3271.3701434.490  4                          1434.490
CD   1  6   0    .000             .00   .00   .00   .00   .00   .00   .00   .00   .00   .00
CD   4  6   0    .000             .00   .00   .00   .00   .00   .00   .00   .00   .00   .00
CD   7  6   0    .000             .00   .00   .00   .00   .00   .00   .00   .00   .00   .00
CD   8  4   1    .000   1.500     .000  .000  .000   .00
CD   2  4   1    .000   2.000     .000  .000  .000   .00
CD   3  4   1    .000   2.500     .000  .000  .000   .00
CD   6  4   1    .000   3.000     .000  .000  .000   .00
CD   9  4   2    .000   2.000     .000  .000  .000   .00
PTS  1 8  1.000  7.330  1.000  1.670  1.670  1.000  8.330  1.000  9.000  1.670
PTS       9.000  7.330  8.330  8.000  1.670  8.000
PTS  4 8  1.000  5.330  1.000  1.670  1.670  1.000  7.330  1.000  8.000  1.670
PTS       8.000  5.330  7.330  6.000  1.670  6.000
PTS  7 8  1.000  6.330  1.000  1.670  1.670  1.000  8.330  1.000  9.000  1.670
PTS       9.000  6.330  8.330  7.000  1.670  7.000
Q           282.000   .0
```

WATER SURFACE PROFILE - CHANNEL DEFINITION LISTING

CARD CODE	SECT NO	CHN TYPE	NO OF PIER/PIP	AVE PIER WIDTH	HEIGHT 1 DIAMETER	BASE WIDTH	ZL	ZR	INV DROP	Y(1)	Y(2)	Y(3)	Y(4)	Y(5)	Y(6)	Y(7)	Y(8)	Y(9)	Y(10)
CD	1	6	0	.000															
CD	4	6	0	.000															
CD	7	6	0	.000															
CD	8	4	1		1.500														
CD	2	4	1		2.000														
CD	3	4	1		2.500														
CD	6	4	1		3.000														
CD	9	4	2		2.000														

WATER SURFACE PROFILE - CROSS SECTION POINT LISTING

CARD CODE	SECT NO	NO OF POINTS	X(1) , Y(1) X(8) , Y(8)	X(2) , Y(2) X(9) , Y(9)	X(3) , Y(3) X(10) ,Y(10)	X(4) , Y(4) X(11) ,Y(11)	X(5) , Y(5) X(N) , Y(N)	X(6) , Y(6) X(N+1),Y(N+1)	X(7) , Y(7) X(35) ,Y(35)
PTS	1	8	1.000 7.330	1.000 1.670	1.670 1.000	8.330 1.000	9.000 1.670	9.000 7.330	8.330 8.000
PTS			1.670 8.000						
PTS	4	8	1.000 5.330	1.000 1.670	1.670 1.000	7.330 1.000	8.000 1.670	8.000 5.330	7.330 6.000
PTS			1.670 6.000						
PTS	7	8	1.000 6.330	1.000 1.670	1.670 1.000	8.330 1.000	9.000 1.670	9.000 6.330	8.330 7.000
PTS			1.670 7.000						

W S P G W

WATER SURFACE PROFILE - TITLE CARD LISTING

HEADING LINE NO 1 IS -

LINE A-B HYDRAULIC MODEL - REVISED TRIBUTARIES

HEADING LINE NO 2 IS -

FN:LINEABREVISED.WSW

HEADING LINE NO 3 IS -

W S P G W

WATER SURFACE PROFILE - ELEMENT CARD LISTING

ELEMENT NO 1 IS A SYSTEM OUTLET * * *

U/S DATA	STATION	INVERT	SECT	W S ELEV
	997.600	1426.790	1	1433.000

ELEMENT NO 2 IS A REACH * * *

U/S DATA	STATION	INVERT	SECT	N	RADIUS	ANGLE	ANG PT	MAN H
	1019.840	1426.870	1	.013	.000	.000	.000	0

ELEMENT NO 3 IS A REACH * * *

U/S DATA	STATION	INVERT	SECT	N	RADIUS	ANGLE	ANG PT	MAN H
	1055.180	1426.990	1	.014	44.996	45.000	.000	0

ELEMENT NO 4 IS A REACH * * *

U/S DATA	STATION	INVERT	SECT	N	RADIUS	ANGLE	ANG PT	MAN H
	1099.820	1427.160	1	.013	.000	.000	.000	0

ELEMENT NO 5 IS A REACH * * *

U/S DATA	STATION	INVERT	SECT	N	RADIUS	ANGLE	ANG PT	MAN H
	1154.080	1427.350	1	.014	45.004	-69.080	.000	0

ELEMENT NO 6 IS A REACH * * *

U/S DATA	STATION	INVERT	SECT	N	RADIUS	ANGLE	ANG PT	MAN H
	1263.330	1427.730	1	.013	.000	.000	.000	1

ELEMENT NO 7 IS A JUNCTION * * * * * *

U/S DATA	STATION	INVERT	SECT	LAT-1	LAT-2	N	Q3	Q4	INVERT-3	INVERT-4	PHI 3	PHI 4
	1263.330	1427.740	1	3	0	.013	21.100	.000	1428.810			

.000 -45.000 .000

RADIUS

ANGLE

.000

.000

REMARKS: TRIBUTARY TO LATERAL AB-1

ELEMENT NO 8 IS A REACH * * *

U/S DATA STATION INVERT SECT N RADIUS

ANGLE ANG PT MAN H

1275.330 1427.760 1 .013 .000

.000 .000 0

ELEMENT NO 9 IS A JUNCTION * * * * * *

U/S DATA STATION INVERT SECT LAT-1 LAT-2 N Q3 Q4 INVERT-3

INVERT-4 PHI 3 PHI 4

1275.330 1427.770 1 2 0 .013 87.000 .000 1428.840

.000 45.000 .000

RADIUS

ANGLE

.000

.000

W S P G W

WATER SURFACE PROFILE - ELEMENT CARD LISTING

REMARKS: REVISED TRIBUTARY TO LATERAL AB-2 FROM RIDER II DISTRIBUTION CENTER,

REMARKS: NO DISCHARGE FROM LATERAL AB-3 AND AB-6

ELEMENT NO 10 IS A REACH * * *

U/S DATA STATION INVERT SECT N RADIUS

ANGLE ANG PT MAN H

1771.510 1429.500 1 .013 .000

.000 .000 1

ELEMENT NO 11 IS A JUNCTION * * * * * *

U/S DATA STATION INVERT SECT LAT-1 LAT-2 N Q3 Q4 INVERT-3

INVERT-4 PHI 3 PHI 4

1777.510 1430.000 7 2 0 .013 25.000 .000 1430.000

.000 -45.000 .000

RADIUS

ANGLE

.000

.000

REMARKS: REVISED TRIBUTARY TO LATERAL AB-4 FROM CORE 5 RIDER INDUSTRIAL,

REMARKS: NO DISCHARGE FROM LATERAL AB-5 AND AB-7

ELEMENT NO 12 IS A REACH * * *

U/S DATA STATION INVERT SECT N RADIUS

ANGLE ANG PT MAN H

2500.000 1432.170 7 .013 .000

.000 .000 0

ELEMENT NO 13 IS A JUNCTION * * * * * *

U/S DATA STATION INVERT SECT LAT-1 LAT-2 N Q3 Q4 INVERT-3

INVERT-4 PHI 3 PHI 4

2510.000 1432.180 7 2 0 .013 35.000 .000 1432.800

.000 -45.000 .000

RADIUS

ANGLE

.000

.000

REMARKS: TRIBUTARY TO LATERAL AB-7.5 AND TOTAL RUNOFF FROM FIRST RIDER INDUSTRIAL PROJECT,

REMARKS: NO DISCHARGE FROM LATERAL AB-8

W S P G W

WATER SURFACE PROFILE - ELEMENT CARD LISTING

ELEMENT NO 14 IS A REACH * * *

U/S DATA STATION INVERT SECT N RADIUS

ANGLE ANG PT MAN H

3083.490 1433.930 7 .013 .000

.000 .000 1

ELEMENT NO 15 IS A JUNCTION * * * * * *

U/S DATA STATION INVERT SECT LAT-1 LAT-2 N Q3 Q4 INVERT-3

INVERT-4 PHI 3 PHI 4

```
                                3093.930 1433.960    4     9     0   .013     8.000      .000  1434.520
    .000  45.000     .000
                                                                                                RADIUS
   ANGLE
                                                                                                 .000
   .000
  REMARKS:   THE FLOW RATE FOR LATERAL AB-9 HAS BEEN CHANGED TO ACCOUNT FOR PUMPED FLOW LEAVING RIDER 3
SITE
  ELEMENT NO  16 IS A REACH             *         *     *
                    U/S DATA   STATION    INVERT  SECT               N                            RADIUS
   ANGLE     ANG PT  MAN H
                                3116.470 1434.030    4               .013                          .000
   .000      .000     0
  ELEMENT NO  17 IS A JUNCTION          *         *     *     *                 *                   *
          *
                    U/S DATA   STATION    INVERT  SECT LAT-1 LAT-2   N      Q3        Q4     INVERT-3
INVERT-4  PHI 3  PHI 4
                                3116.470 1434.040    4     2     0   .013    48.000      .000  1434.620
    .000  45.000     .000
                                                                                                RADIUS
   ANGLE
                                                                                                 .000
   .000
  REMARKS:   REVISED TRIBUTARY TO LATERAL AB-10 FROM AREA BETWEEN RIDER I DISTRIBUTION CENTER AND

  REMARKS:   PROPOSED MID-COUNTY-PARKWAY IMPACT AREA

  ELEMENT NO  18 IS A REACH             *         *     *
                    U/S DATA   STATION    INVERT  SECT               N                            RADIUS
   ANGLE     ANG PT  MAN H
                                3271.370 1434.490    4               .013                          .000
   .000      .000     1
  ELEMENT NO  19 IS A SYSTEM HEADWORKS                *                     *
                    U/S DATA   STATION    INVERT  SECT                                  W S ELEV
                                3271.370 1434.490    4                                1434.490
```

Program Package Serial Number: 1585

WATER SURFACE PROFILE LISTING Date: 1-28-2020 Time: 2:52:38

LINE A-B HYDRAULIC MODEL - REVISED TRIBUTARIES

FN:LINEABREVISED.WSW

Station	Invert Elev	Depth (FT)	Water Elev	Q (CFS)	Vel (FPS)	Vel Head	Energy Grd.El.	Super Elev	Critical Depth	Flow Top Width	Height/ Dia.-FT	Base Wt or I.D.	ZL	No Wth Prs/Pip
L/Elem	Ch Slope					SF Ave	HF	SE Dpth	Froude N	Norm Dp	"N"	X-Fall	ZR	Type Ch
997.600	1426.790	6.210	1433.000	506.10	10.28	1.64	1434.64	.00	5.05	8.00		1	0	.0
22.240	.0036					.0024	.05	6.21	.73	5.277	.013			IR-COV
1019.840	1426.870	6.153	1433.023	506.10	10.38	1.67	1434.69	.34	5.05	8.00		1	0	.0
35.340	.0034					.0028	.10	6.49	.74	5.717	.014			IR-COV
1055.180	1426.990	6.109	1433.099	506.10	10.45	1.70	1434.80	.00	5.05	8.00		1	0	.0
44.640	.0038					.0025	.11	6.11	.75	5.160	.013			IR-COV
1099.820	1427.160	5.976	1433.136	506.10	10.69	1.77	1434.91	.36	5.05	8.00		1	0	.0
54.260	.0035					.0030	.16	6.34	.77	5.650	.014			IR-COV
1154.080	1427.350	5.917	1433.267	506.10	10.79	1.81	1435.08	.00	5.05	8.00		1	0	.0
109.250	.0035					.0027	.29	5.92	.79	5.345	.013			IR-COV
1263.330	1427.730	5.708	1433.438	506.10	11.19	1.95	1435.38	.00	5.05	8.00		1	0	.0
JUNCT STR	.0000					.0021	.00	5.71	.83		.013			IR-COV

---------- WARNING - Junction Analysis - Irregular Channel----------

1263.330	1427.740	6.263	1434.003	485.00	9.77	1.48	1435.48	.00	4.91	8.00		1	0	.0
12.000	.0017					.0021	.03	6.26	.69	7.000	.013			IR-COV
1275.330	1427.760	6.274	1434.034	485.00	9.75	1.48	1435.51	.00	4.91	8.00		1	0	.0
JUNCT STR	.0000					.0012	.00	6.27	.69		.013			IR-COV

---------- WARNING - Junction Analysis - Irregular Channel----------

Program Package Serial Number: 1585

WATER SURFACE PROFILE LISTING Date: 1-28-2020 Time: 2:52:38

LINE A-B HYDRAULIC MODEL - REVISED TRIBUTARIES

FN:LINEABREVISED.WSW

Station	Invert Elev	Depth (FT)	Water Elev	Q (CFS)	Vel (FPS)	Vel Head	Energy Grd.El.	Super Elev	Critical Depth	Flow Top Width	Height/ Dia.-FT	Base Wt or I.D.	ZL	No Wth Prs/Pip
L/Elem	Ch Slope					SF Ave	HF	SE Dpth	Froude N	Norm Dp	"N"	X-Fall	ZR	Type Ch
1275.330	1427.770	6.913	1434.683	398.00	7.30	.83	1435.51	.00	4.31	6.83			1	0 .0
120.346	.0035					.0012	.14	6.91	.46	4.441	.013			IR-COV
1395.676	1428.190	6.560	1434.750	398.00	7.66	.91	1435.66	.00	4.31	7.54			1	0 .0
103.079	.0035					.0013	.13	6.56	.51	4.441	.013			IR-COV
1498.755	1428.549	6.251	1434.800	398.00	8.03	1.00	1435.80	.00	4.31	8.00			1	0 .0
96.802	.0035					.0014	.14	6.25	.57	4.441	.013			IR-COV
1595.557	1428.886	5.962	1434.849	398.00	8.42	1.10	1435.95	.00	4.31	8.00			1	0 .0
93.881	.0035					.0016	.15	5.96	.61	4.441	.013			IR-COV
1689.438	1429.214	5.687	1434.901	398.00	8.83	1.21	1436.11	.00	4.31	8.00			1	0 .0
82.072	.0035					.0018	.15	5.69	.66	4.441	.013			IR-COV
1771.510	1429.500	5.452	1434.953	398.00	9.22	1.32	1436.27	.00	4.31	8.00			1	0 .0
JUNCT STR	.0833					.0020	.01	5.45	.70		.013			IR-COV
		WARNING - Junction Analysis - Irregular Channel												
1777.510	1430.000	4.942	1434.942	373.00	9.54	1.41	1436.36	.00	4.13	8.00			7	0 .0
161.308	.0030					.0023	.37	4.94	.76	4.474	.013			IR-COV

Program Package Serial Number: 1585

WATER SURFACE PROFILE LISTING Date: 1-28-2020 Time: 2:52:38

LINE A-B HYDRAULIC MODEL - REVISED TRIBUTARIES

FN:LINEABREVISED.WSW

Station	Invert Elev	Depth (FT)	Water Elev	Q (CFS)	Vel (FPS)	Vel Head	Energy Grd.El.	Super Elev	Critical Depth	Flow Top Width	Height/ Dia.-FT	Base Wt or I.D.	ZL	No Wth Prs/Pip
L/Elem	Ch Slope					SF Ave	HF	SE Dpth	Froude N	Norm Dp	"N"	X-Fall	ZR	Type Ch
1938.818	1430.484	4.714	1435.199	373.00	10.01	1.56	1436.75	.00	4.13	8.00			7	0 .0
281.505	.0030					.0026	.74	4.71	.82	4.474	.013			IR-COV
2220.323	1431.330	4.498	1435.828	373.00	10.50	1.71	1437.54	.00	4.13	8.00			7	0 .0
227.137	.0030					.0030	.67	4.50	.88	4.474	.013			IR-COV
2447.460	1432.012	4.474	1436.486	373.00	10.55	1.73	1438.22	.00	4.13	8.00			7	0 .0
52.540	.0030					.0030	.16	4.47	.88	4.474	.013			IR-COV
2500.000	1432.170	4.474	1436.644	373.00	10.55	1.73	1438.37	.00	4.13	8.00			7	0 .0
JUNCT STR	.0010					.0017	.02	4.47	.88		.013			IR-COV

---------- WARNING - Junction Analysis - Irregular Channel----------

2510.000	1432.180	5.209	1437.389	338.00	8.20	1.04	1438.43	.00	3.87	8.00			7	0 .0
105.844	.0031					.0017	.18	5.21	.64	4.129	.013			IR-COV
2615.844	1432.503	4.968	1437.471	338.00	8.60	1.15	1438.62	.00	3.87	8.00			7	0 .0
107.234	.0031					.0019	.20	4.97	.68	4.129	.013			IR-COV
2723.078	1432.830	4.740	1437.570	338.00	9.02	1.26	1438.83	.00	3.87	8.00			7	0 .0
115.552	.0031					.0021	.24	4.74	.73	4.129	.013			IR-COV
2838.630	1433.183	4.522	1437.705	338.00	9.46	1.39	1439.09	.00	3.87	8.00			7	0 .0
139.380	.0031					.0024	.33	4.52	.79	4.129	.013			IR-COV

LINE A-B HYDRAULIC MODEL - REVISED TRIBUTARIES
FN:LINEABREVISED.WSW

Station	Invert Elev	Depth (FT)	Water Elev	Q (CFS)	Vel (FPS)	Vel Head	Energy Grd.El.	Super Elev	Critical Depth	Flow Top Width	Height/ Dia.-FT	Base Wt or I.D.	ZL	No Wth Prs/Pip
L/Elem	Ch Slope					SF Ave	HF	SE Dpth	Froude N	Norm Dp	"N"	X-Fall	ZR	Type Ch
2978.010	1433.608	4.314	1437.922	338.00	9.92	1.53	1439.45	.00	3.87	8.00			7	0 .0
15.157	.0031					.0027	.04	4.31	.85	4.129	.013			IR-COV
2993.167	1433.655	4.300	1437.954	338.00	9.96	1.54	1439.49	.00	3.87	8.00			7	0 .0
HYDRAULIC JUMP														
2993.167	1433.655	3.467	1437.122	338.00	12.39	2.38	1439.50	.00	3.87	8.00			7	0 .0
14.318	.0031					.0050	.07	3.47	1.18	4.129	.013			IR-COV
3007.486	1433.698	3.408	1437.106	338.00	12.60	2.47	1439.57	.00	3.87	8.00			7	0 .0
37.368	.0031					.0055	.20	3.41	1.21	4.129	.013			IR-COV
3044.853	1433.812	3.252	1437.064	338.00	13.22	2.71	1439.78	.00	3.87	8.00			7	0 .0
38.637	.0031					.0062	.24	3.25	1.30	4.129	.013			IR-COV
3083.490	1433.930	3.104	1437.034	338.00	13.86	2.98	1440.02	.00	3.87	8.00			7	0 .0
JUNCT STR	.0029					.0054	.06	3.10	1.40		.013			IR-COV
		---------- WARNING - Junction Analysis - Irregular Channel----------												
3093.930	1433.960	4.166	1438.126	330.00	11.49	2.05	1440.18	.00	4.17	7.00			4	0 .0
18.333	.0031					.0036	.07	4.17	1.00	4.698	.013			IR-COV
3112.263	1434.017	4.366	1438.383	330.00	10.96	1.86	1440.25	.00	4.17	6.93			4	0 .0
4.207	.0031					.0036	.02	4.37	.93	4.698	.013			IR-COV

Program Package Serial Number: 1585

WATER SURFACE PROFILE LISTING Date: 1-28-2020 Time: 2:52:38

LINE A-B HYDRAULIC MODEL - REVISED TRIBUTARIES

FN:LINEABREVISED.WSW

Station	Invert Elev	Depth (FT)	Water Elev	Q (CFS)	Vel (FPS)	Vel Head	Energy Grd.El.	Super Elev	Critical Depth	Flow Top Width	Height/ Dia.-FT	Base Wt or I.D.	ZL	No Wth Prs/Pip
L/Elem	Ch Slope					SF Ave	HF	SE Dpth	Froude N	Norm Dp	"N"	X-Fall	ZR	Type Ch
3116.470	1434.030	4.380	1438.410	330.00	10.92	1.85	1440.26	.00	4.17	6.90		4	0	.0
JUNCT STR	.0000					.0030	.00	4.38	.92		.013			IR-COV
WARNING - Junction Analysis - Irregular Channel														
3116.470	1434.040	5.161	1439.201	282.00	8.27	1.06	1440.26	.00	3.76	5.66		4	0	.0
154.900	.0029					.0030	.46	5.16	.59	4.208	.013			IR-COV
3271.370	1434.490	5.228	1439.718	282.00	8.27	1.06	1440.78	.00	3.76	5.66		4	0	.0

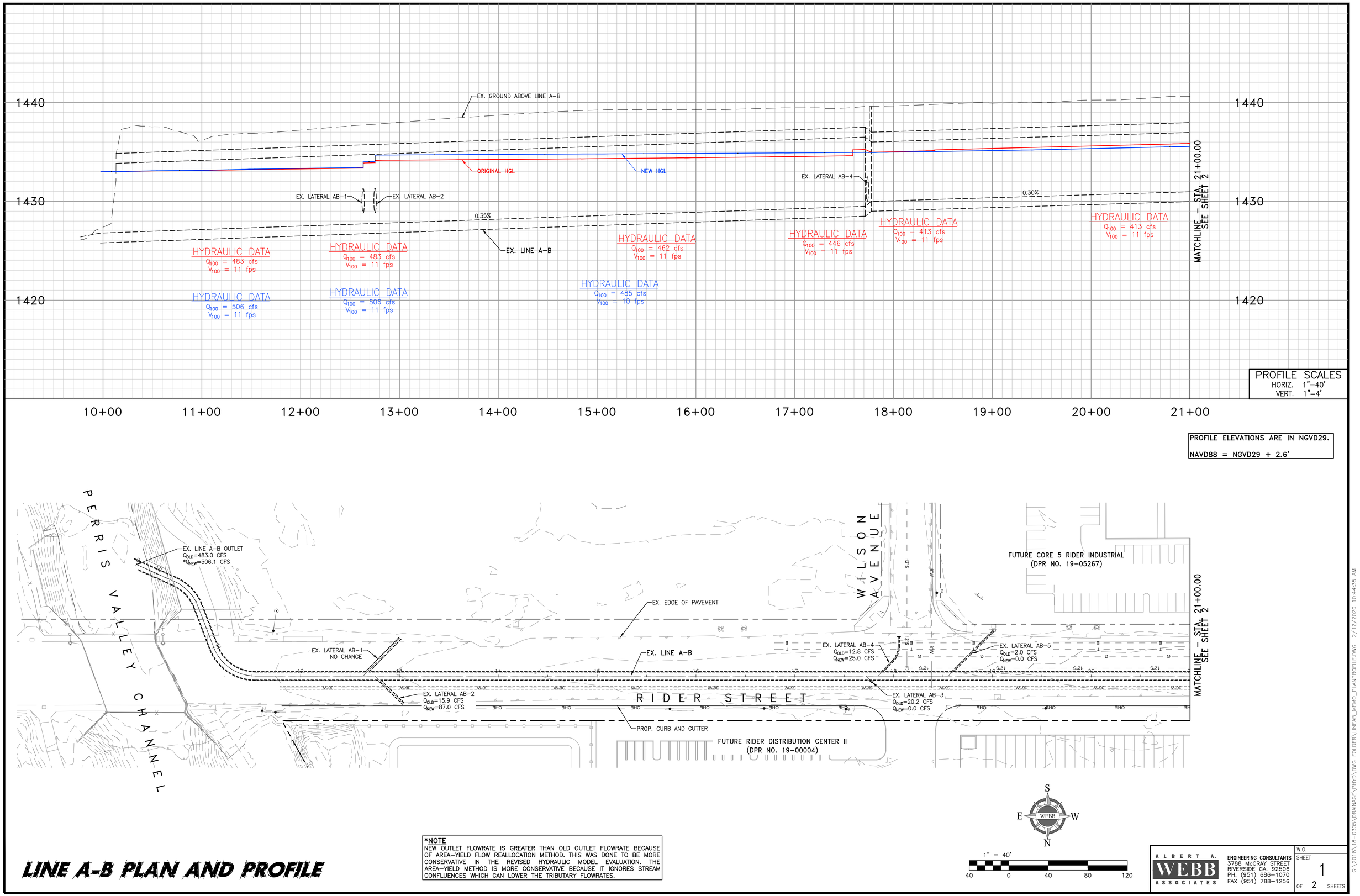

LINE A-B PLAN AND PROFILE

***NOTE**
NEW OUTLET FLOWRATE IS GREATER THAN OLD OUTLET FLOWRATE BECAUSE OF AREA-YIELD FLOW REALLOCATION METHOD. THIS WAS DONE TO BE MORE CONSERVATIVE IN THE REVISED HYDRAULIC MODEL EVALUATION. THE AREA-YIELD METHOD IS MORE CONSERVATIVE BECAUSE IT IGNORES STREAM CONFLUENCES WHICH CAN LOWER THE TRIBUTARY FLOWRATES.

ALBERT A. WEBB ASSOCIATES
ENGINEERING CONSULTANTS
3788 McCRAY STREET
RIVERSIDE CA. 92506
PH. (951) 686-1070
FAX (951) 788-1256

W.O.
SHEET 1
OF 2 SHEETS

G:\2018\18-0305\DRAINAGE\PHYD\DWG FOLDER\LINEAB_MEMO_PLANPROFILE.DWG 2/12/2020 10:44:35 AM

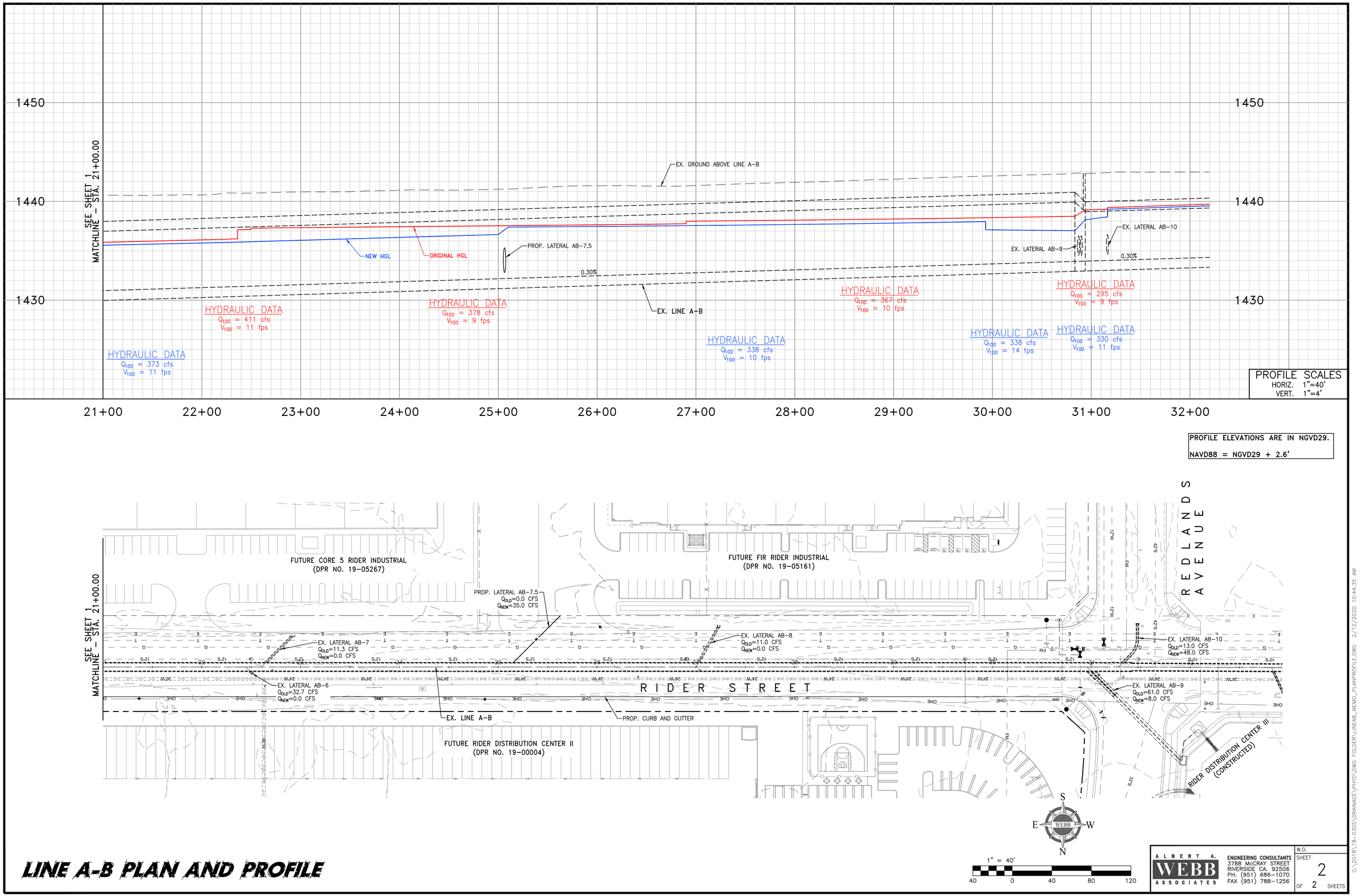

LINE A-B PLAN AND PROFILE

ALBERT A. WEBB ASSOCIATES
ENGINEERING CONSULTANTS
3788 McCRAY STREET
RIVERSIDE CA. 92506
PH. (951) 686–1070
FAX (951) 788–1256

W.O.

SHEET 2 OF 2 SHEETS

G:\2018\18-0305\DRAINAGE\PHYD\DWG FOLDER\LINEAB_MEMO_PLANPROFILE.DWG 2/12/2020 10:44:35 AM

Appendix C: Line A-C Hydraulics, Plan and Profile

```
T1 LINE A-C HYDRAULIC MODEL
T2 FN:LINEAC.WSW
SO   1000.0001428.040  1                          1432.600
R    1133.4701428.440  1      .013                                .000    .000
JX   1133.4701428.440  1  1   .013   31.200          1428.440     -30.0        0.000
R    1143.4701428.480  1      .013                                .000    .000
R    1176.3001428.570  1      .013                                .000    .000 1
JX   1176.3001428.570  2  2   .013   19.200          1428.570      30.0        0.000
R    1186.3001429.070  2      .013                                .000    .000
R    2100.0001431.810  2      .013                                .000    .000 1
SH   2100.0001431.810  2                          1431.810
CD   1  4   1    .000   3.500     .000  .000  .000   .00
CD   2  4   1    .000   3.000     .000  .000  .000   .00
CD   3  4   1    .000   2.500     .000  .000  .000   .00
Q            22.200   .0
```

WATER SURFACE PROFILE - CHANNEL DEFINITION LISTING

CARD CODE	SECT NO	CHN TYPE	NO OF PIER/PIP	AVE PIER WIDTH	HEIGHT 1 DIAMETER	BASE WIDTH	ZL	ZR	INV DROP	Y(1)	Y(2)	Y(3)	Y(4)	Y(5)	Y(6)	Y(7)	Y(8)	Y(9)	Y(10)
CD	1	4	1		3.500														
CD	2	4	1		3.000														
CD	3	4	1		2.500														

W S P G W

WATER SURFACE PROFILE - TITLE CARD LISTING

HEADING LINE NO 1 IS -
LINE A-C HYDRAULIC MODEL
HEADING LINE NO 2 IS -
FN:LINEAC.WSW
HEADING LINE NO 3 IS -

W S P G W

WATER SURFACE PROFILE - ELEMENT CARD LISTING

ELEMENT NO 1 IS A SYSTEM OUTLET * * *

U/S DATA	STATION	INVERT	SECT	W S ELEV
	1000.000	1428.040	1	1432.600

ELEMENT NO 2 IS A REACH * * *

U/S DATA	STATION	INVERT	SECT	N	RADIUS	ANGLE	ANG PT	MAN H
	1133.470	1428.440	1	.013	.000	.000	.000	0

ELEMENT NO 3 IS A JUNCTION * * * * * *

U/S DATA	STATION	INVERT	SECT	LAT-1	LAT-2	N	Q3	Q4	INVERT-3	INVERT-4	PHI 3	PHI 4
	1133.470	1428.440	1	1	0	.013	31.200	.000	1428.440	.000	-30.000	.000

RADIUS	ANGLE
.000	

THE ABOVE ELEMENT CONTAINED AN INVERT ELEV WHICH WAS NOT GREATER THAN THE PREVIOUS INVERT ELEV -WARNING
THE ABOVE ELEMENT CONTAINED AN INVERT ELEV WHICH WAS NOT GREATER THAN THE PREVIOUS INVERT ELEV -WARNING

ELEMENT NO 4 IS A REACH * * *

U/S DATA	STATION	INVERT	SECT	N	RADIUS	ANGLE	ANG PT	MAN H
	1143.470	1428.480	1	.013	.000	.000	.000	0

ELEMENT NO 5 IS A REACH * * *

U/S DATA	STATION	INVERT	SECT	N	RADIUS	ANGLE	ANG PT	MAN H
	1176.300	1428.570	1	.013	.000	.000	.000	1

ELEMENT NO 6 IS A JUNCTION * * * * * *

U/S DATA	STATION	INVERT	SECT	LAT-1	LAT-2	N	Q3	Q4	INVERT-3	INVERT-4	PHI 3	PHI 4
	1176.300	1428.570	2	2	0	.013	19.200	.000	1428.570	.000	30.000	.000

RADIUS	ANGLE
.000	

THE ABOVE ELEMENT CONTAINED AN INVERT ELEV WHICH WAS NOT GREATER THAN THE PREVIOUS INVERT ELEV -WARNING
THE ABOVE ELEMENT CONTAINED AN INVERT ELEV WHICH WAS NOT GREATER THAN THE PREVIOUS INVERT ELEV -WARNING

ELEMENT NO 7 IS A REACH * * *

U/S DATA	STATION	INVERT	SECT	N	RADIUS	ANGLE	ANG PT	MAN H
	1186.300	1429.070	2	.013	.000	.000	.000	0

ELEMENT NO 8 IS A REACH * * *

U/S DATA	STATION	INVERT	SECT	N	RADIUS	ANGLE	ANG PT	MAN H
	2100.000	1431.810	2	.013	.000	.000	.000	1

ELEMENT NO 9 IS A SYSTEM HEADWORKS * *

U/S DATA	STATION	INVERT	SECT	W S ELEV
	2100.000	1431.810	2	1431.810

W S P G W

WATER SURFACE PROFILE - ELEMENT CARD LISTING

Program Package Serial Number: 1585

WATER SURFACE PROFILE LISTING Date: 1-29-2020 Time: 3:25:44

LINE A-C HYDRAULIC MODEL
FN:LINEAC.WSW

Station / L/Elem	Invert Elev / Ch Slope	Depth (FT)	Water Elev	Q (CFS)	Vel (FPS)	Vel Head / SF Ave	Energy Grd.El. / HF	Super Elev / SE Dpth	Critical Depth / Froude N	Flow Top Width / Norm Dp	Height/ Dia.-FT / "N"	Base Wt or I.D. / X-Fall	ZL / ZR	No Wth Prs/Pip / Type Ch
1000.000	1428.040	4.560	1432.600	72.60	7.55	.88	1433.48	.00	2.67	.00	3.500	.000	.00	1 .0
133.470	.0030					.0052	.69	4.56	.00	3.50	.013	.00	.00	PIPE
1133.470	1428.440	4.855	1433.295	72.60	7.55	.88	1434.18	.00	2.67	.00	3.500	.000	.00	1 .0
JUNCT STR	.0000					.0035	.00	4.86	.00		.013	.00	.00	PIPE
1133.470	1428.440	5.765	1434.205	41.40	4.30	.29	1434.49	.00	2.00	.00	3.500	.000	.00	1 .0
10.000	.0040					.0017	.02	5.77	.00	2.06	.013	.00	.00	PIPE
1143.470	1428.480	5.742	1434.222	41.40	4.30	.29	1434.51	.00	2.00	.00	3.500	.000	.00	1 .0
32.830	.0027					.0017	.06	5.74	.00	2.34	.013	.00	.00	PIPE
1176.300	1428.570	5.722	1434.292	41.40	4.30	.29	1434.58	.00	2.00	.00	3.500	.000	.00	1 .0
JUNCT STR	.0000					.0014	.00	5.72	.00		.013	.00	.00	PIPE
1176.300	1428.570	5.958	1434.528	22.20	3.14	.15	1434.68	.00	1.52	.00	3.000	.000	.00	1 .0
10.000	.0500					.0011	.01	5.96	.00	.78	.013	.00	.00	PIPE
1186.300	1429.070	5.469	1434.539	22.20	3.14	.15	1434.69	.00	1.52	.00	3.000	.000	.00	1 .0
913.700	.0030					.0011	1.01	5.47	.00	1.69	.013	.00	.00	PIPE
2100.000	1431.810	3.749	1435.559	22.20	3.14	.15	1435.71	.00	1.52	.00	3.000	.000	.00	1 .0

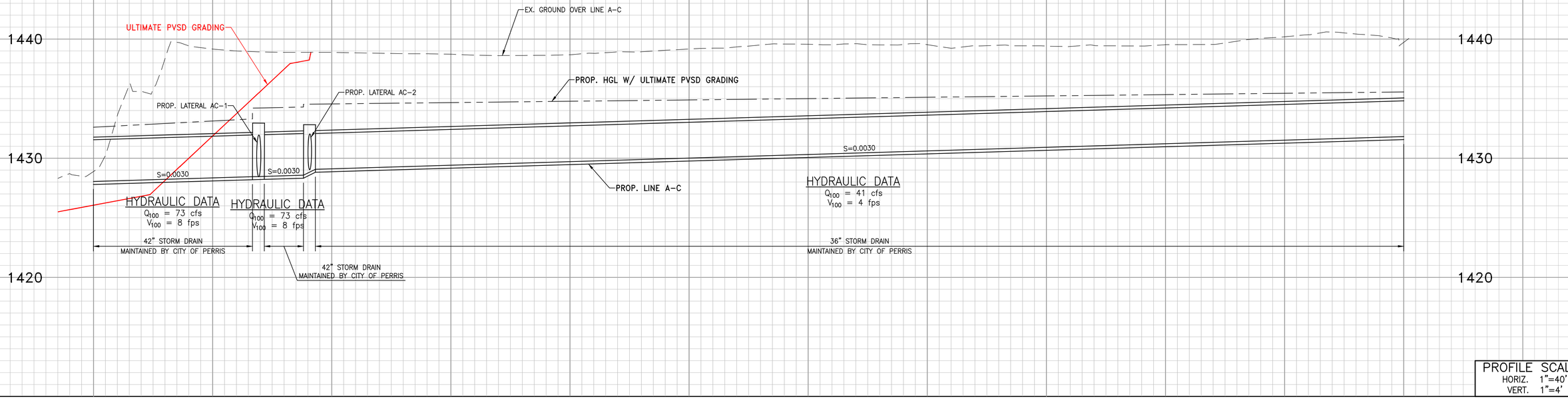

PROFILE SCALES
HORIZ. 1"=40'
VERT. 1"=4'

PROFILE ELEVATIONS ARE IN NAVD88.

NGVD29 = NAVD88 – 2.6'

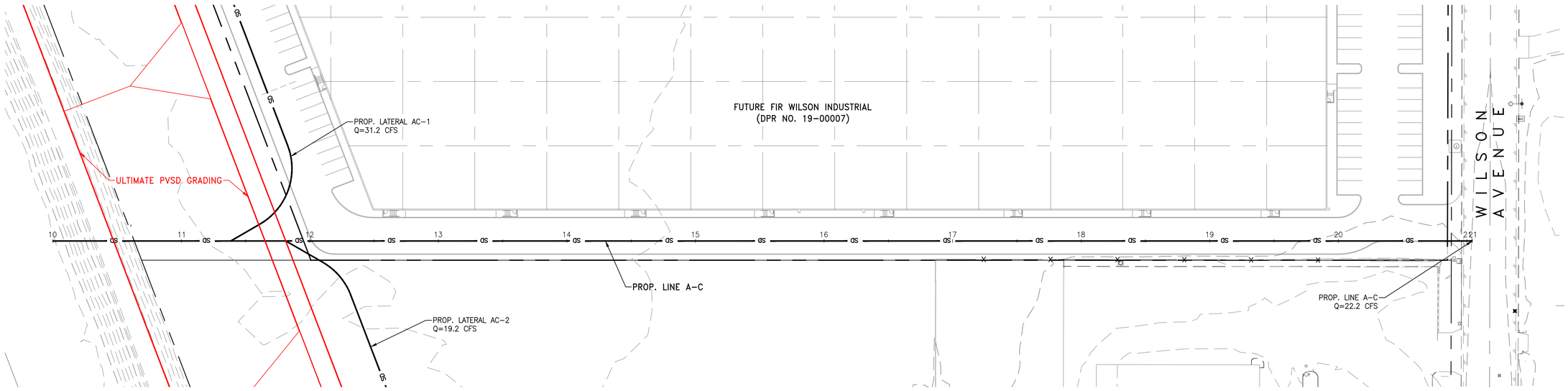



1" = 40'

40 0 40 80 120

LINE A-C PLAN AND PROFILE

ALBERT A. WEBB ASSOCIATES
ENGINEERING CONSULTANTS
3788 McCRAY STREET
RIVERSIDE, CA. 92506
PH. (951) 686-1070
FAX (951) 788-1256

W.O.

SHEET 1 OF 2 SHEETS

G:\2018\18-0305\DRAINAGE\PHYD\DWG FOLDER\LINEAC_MEMO_PLANPROFILE.DWG 2/12/2020 10:48:30 AM

Appendix D: Line A-B As-Built Plans

RIVERSIDE COUNTY FLOOD CONTROL AND WATER CONSERVATION DISTRICT

INDEX

	SHEET NO.:
TITLE SHEET	1
PLAN & PROFILES	2–13
LATERAL PROFILES	14–17
OETAILS	18

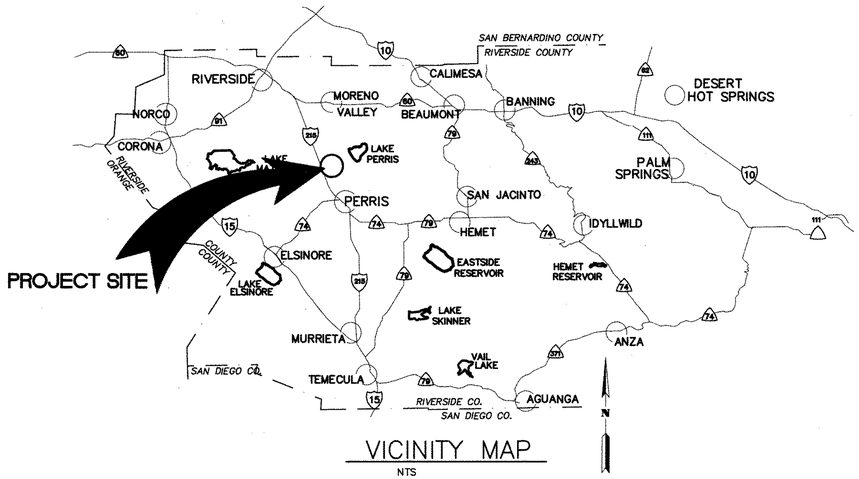

VICINITY MAP
NTS

THE ULTIMATE H.C.L. IS BASED ON THE ADOPTED MDP WATER SURFACE ELEVATION OF 1433 IN THE PERRIS VALLEY STORM CHANNEL (PVSC) AT RIDER STREET, AND ASSUMES THAT FULL CHANNEL IMPROVEMENTS HAVE BEEN CONSTRUCTED PER THE ADOPTED MDP. FOR ALL WATER SURFACE ELEVATIONS BETWEEN 1433 AND THE 100-YEAR FLOOD ELEVATION FOR PVSC (1437.5), LINE "A-B" WILL NOT HAVE CAPACITY FOR LOCAL 100-YEAR FLOWS.

LEGEND:

ℙ	—PROPERTY LINE
R/W	—RIGHT OF WAY
℄	—CENTERLINE
T.C.	—TOP OF CURB
F.L.	—FLOW LINE
F.S.	—FINISH SURFACE
H.P.	—HIGH POINT
F.F.	—FINISH FLOOR
R.C.P.	—REINFORCED CONCRETE PIPE
INV.	—INVERT
S =	—SLOPE
F.G.	—FINISH GRADE
S.D.	—STORM DRAIN
ST.LT.	—STREET LIGHT
G.B.	—GRADE BREAK
H.P.	—HIGH POINT
E.C.	—EDGE OF CONCRETE
G.A.	—GUY ANCHOR
A.B.	—AGGREGATE BASE
F.H.	—FIRE HYDRANT
P.P.	—POWER POLE
C.B.	—CATCH BASIN
R=	—RATE OF GRADE
B.C.R.	—BEGIN OF CURB RETURN
E.C.R.	—END OF CURB RETURN
L.P.	—LOW POINT
T.O.P.	—TOP OF PIPE
B.O.P.	—BOTTOM OF PIPE
R	—RATE OF GRADE
T.F.	—TOP OF FOOTING
T.W.	—TOP OF WALL
S.F.	—SQUARE FEET
C.F.	—CURB FACE
F.P.	—FINISHED PAVEMENT
S.F.O.W	—SOUTH FACE OF WALL
N.F.O.W	—NORTH FACE OF WALL
E.F.O.W	—EAST FACE OF WALL
W.F.O.W	—WEST FACE OF WALL
T.P.	—TOP OF PIPE
(0.00)	—EXISTING ELEVATION
B.O.W.	—BOTTOM OF WALL
T.C.	—TOP OF CRATE
N.C.	—NATURAL GRADE
TOP	—TOP OF SLOPE
TOE	—TOE OF SLOPE
E.P.	—EDGE OF PAVEMENT
A.C.	—ASPHALT CONCRETE
C.L.F.	—CHAIN LINK FENCE
CONC.	—CONCRETE
PKWY DRAIN	—PARKWAY DRAIN
EXIST.	—EXISTING
EMH	—EOISON MANHOLE
M.H.	—MANHOLE
T.B.	—TOP OF BERM
E.T.W.	—EDGE OF TRAVELWAY
B.W.	—BACK OF WALK
TC-TX	—TOP OF CURB@DRIVEWAY
TC-BX	—BOT. OF CURB@DRIVEWAY
⊕	—BORING LOCATION
1	—REVISION SYMBOL AND NUMBER PER EMWD REQUIREMENT
1	—RCFD & WCD REVISION

GENERAL NOTES

1. THE CONTRACTOR SHALL CONSTRUCT THE FLOOD CONTROL IMPROVEMENTS SHOWN ON THE DRAWINGS IN CONFORMANCE WITH THE REQUIREMENTS OF THE RIVERSIDE COUNTY FLOOD CONTROL AND WATER CONSERVATION DISTRICT'S M.O.U. STANDARD SPECIFICATIONS DATED JUNE 24, 2008, AND RCFC&WCD STANDARD MANUAL. FOR THE LATEST DRAWINGS OF THE STANDARD MANUAL, PLEASE REFER TO THE "PUBLICATIONS AND RECORDS" PAGE FOUND ON THE DISTRICT'S WEBSITE.
2. CONTACT THE ENCROACHMENT PERMIT ENGINEER AT 951.955.1266 IF AN ENCROACHMENT PERMIT IS REQUIRED FROM RIVERSIDE COUNTY FLOOD CONTROL. AFTER THE PERMIT IS ISSUED THE DISTRICT MUST BE NOTIFIED ONE WEEK PRIOR TO CONSTRUCTION.
3. CONTACT CONTRACT ADMINISTRATION AT 951.955.1288 IF CONSTRUCTION INSPECTION WILL BE PERFORMED BY RIVERSIDE COUNTY FLOOD CONTROL. THE DISTRICT MUST BE NOTIFIED TWENTY DAYS (2D) PRIOR TO CONSTRUCTION.
4. ALL STATIONING REFERS TO CENTERLINE OF CONSTRUCTION UNLESS OTHERWISE NOTED.
5. STATIONING FOR LATERALS AND CONNECTOR PIPE REFER TO THE CENTERLINE INTERSECTION STATIONS.
6. FORTY-EIGHT HOURS BEFORE EXCAVATION, CALL UNDERGROUND SERVICE ALERT 1.800.227.2600.
7. ALL ELEVATIONS SHOWN ARE IN FEET AND DECIMALS THEREOF BASED ON THE NORTH AMERICAN VERTICAL DATUM (NAVD 1929).
8. ALL COORDINATES ARE SHOWN IN FEET AND DECIMALS THEREOF BASED ON THE NORTH AMERICAN DATUM (NAD 83), CALIFORNIA COORDINATE SYSTEM (CCS), ZONE 6 AND EPOCH 2011.00.
9. ALL CROSS SECTIONS ARE TAKEN LOOKING DOWNSTREAM.
10. ELEVATIONS OF UTILITIES ARE APPROXIMATE UNLESS OTHERWISE NOTED.
11. UNLESS OTHERWISE SPECIFIED, MINIMUM STREET RECONSTRUCTION SHALL BE 4" TYPE "B" HOT MIX ASPHALT OVER 6" CLASS 2 AGGREGATE BASE OR AS SPECIFIED BY THE ENGINEER
12. OPENINGS RESULTING FROM THE CUTTING OR PARTIAL REMOVAL OF EXISTING CULVERTS, PIPES OR SIMILAR STRUCTURES TO BE ABANDONED SHALL BE SEALED WITH 6" OF CLASS "B" CONCRETE.
13. PIPE CONNECTED TO THE MAINLINE PIPE SHALL CONFORM TO JUNCTION STRUCTURE NO. 4 (JS 229) UNLESS OTHERWISE NOTED.
14. PIPE BEDDING SHALL CONFORM TO RCFC&WCD STD. DWG. NO. M815 EXCEPT FOR COVER <2 FEET. FOR COVER <2 FEET, CONCRETE SLURRY (2000 PSI - 2 SACK) SHALL BE USED. THE ENTIRE TRENCH SHALL BE SLURRY EXTENDING 4 INCHES MINIMUM AND 12 INCHES MAXIMUM ABOVE THE TOP OF THE PIPE.
15. BH-1 INDICATES SOIL BORING LOCATIONS BASED ON THE SOILS REPORT DATED 11-19-2009. LOCATIONS SHOWN ARE APPROXIMATE.
16. "V" IS THE DEPTH OF CATCH BASINS MEASURED FROM THE TOP OF CURB TO INVERT OF CONNECTOR PIPE.
17. CATCH BASINS SHALL BE LOCATED SO THAT LOCAL DEPRESSION SHALL BEGIN AT EXISTING CURB RETURN JOINT, UNLESS OTHERWISE SPECIFIED.
18. ALL CURBS, GUTTERS, SIDEWALKS, DRIVEWAYS AND OTHER EXISTING IMPROVEMENTS TO BE RECONSTRUCTED IN KIND AND AT THE SAME ELEVATION AND LOCATION AS THE EXISTING IMPROVEMENTS UNLESS OTHERWISE NOTED.
19. STANDARD DRAWINGS CALLED FOR ON THE PLAN AND PROFILE SHALL CONFORM TO DISTRICT STANDARD DRAWINGS UNLESS NOTED OTHERWISE.
20. THE CONTRACTOR IS REQUIRED TO CALL ALL UTILITY AGENCIES REGARDING TEMPORARY SHORING AND SUPPORT REQUIREMENTS FOR THE VARIOUS UTILITY LINES SHOWN ON THESE PLANS.
21. DURING ROUGH GRADING OPERATIONS AND PRIOR TO CONSTRUCTION OF PERMANENT DRAINAGE STRUCTURES, TEMPORARY DRAINAGE CONTROL SHOULD BE PROVIDED TO PREVENT PONDING WATER AND DAMAGE TO ADJACENT PROPERTIES.
22. APPROVAL OF THESE PLANS BY THE RIVERSIDE COUNTY FLOOD CONTROL AND WATER CONSERVATION DISTRICT DOES NOT RELIEVE THE DEVELOPER'S ENGINEER OF RESPONSIBILITY FOR THE ENGINEERING DESIGN. IF FIELD CHANGES ARE REQUIRED, IT WILL BE THE RESPONSIBILITY OF THE DESIGN ENGINEER TO MAKE THE NECESSARY CORRECTIONS.
23. THE CONTRACTOR OR DEVELOPER SHALL SECURE ALL REQUIRED ENCROACHMENT AND/OR STATE AND FEDERAL REGULATORY PERMITS PRIOR TO THE COMMENCEMENT OF ANY WORK.
24. THE CONCRETE COATING ON THE INSIDE OF ALL REINFORCED CONCRETE PIPES MUST BE INCREASED TO PROVIDE A MINIMUM OF 1-1/2 INCHES OVER THE REINFORCING AND INCREASED TO A MINIMUM OF 3-1/2 INCHES OVER REINFORCING FOR BOX CULVERT, WHEN DESIGN VELOCITIES EXCEED 20 FEET PER SECOND. THE CONCRETE DESIGN STRENGTH IN THESE REACHES SHALL BE F'C=5,000 PSI FOR VELOCITIES EXCEEDING 20 FEET PER SECOND AND F'C=6,000 PSI FOR VELOCITIES EXCEEDING 30 FEET PER SECOND.
25. CONSTRUCTION JOINTS FOR CALTRANS STANDARD REINFORCED CONCRETE BOX SHALL BE PLACED ACCORDING TO RCFC&WCD STANDARD DRAWING NO. BOX 401.

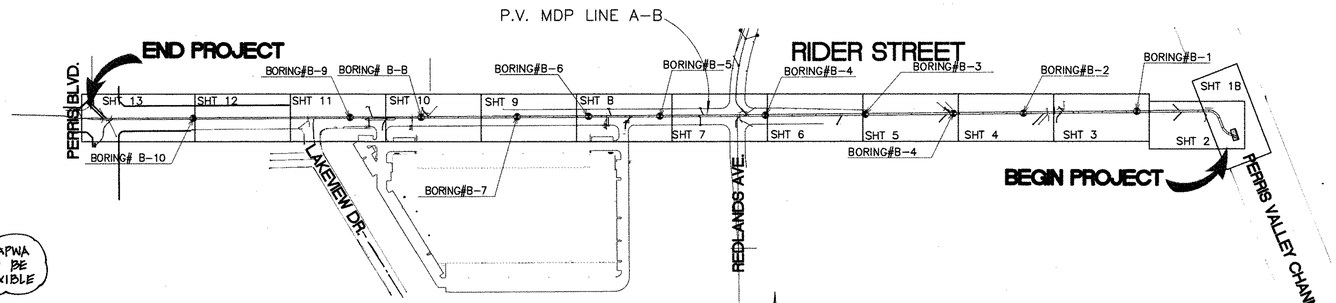

INDEX MAP
1"=300'

1 NOTE:
FOR PRE-CAST RCB, USE JOINT SEALANT PER APWA STD PLAN 330.0 ALL PRE-CAST RCB JOINTS TO BE SEALED WITH RUBBER BASED PRE-FORMED FLEXIBLE JOINT SEALANT AND CEMENT MORTAR.

SURVEY MONUMENT NOTES:
EXISTING C/L INTERSECTION MONUMENTS SHALL BE TIED WITH PRE-CONSTRUCTION TIE NOTES FILED WITH THE COUNTY OF RIVERSIDE. POST CONSTRUCTION MONUMENTS TO BE SET, AND POST CONSTRUCTION TIE NOTES TO BE FILED WITH THE COUNTY OF RIVERSIDE

Don't Dig...Until You Call U.S.A. Toll Free
1-800-227-2600
for the location of buried utility lines.
Don't disrupt vital services.
TWO WORKING DAYS BEFORE YOU DIG

AEL 4/16/14

MS 94

CITY OF PERRIS
FILE NO. P8-1013

BENCH MARK
COUNTY OF RIVERSIDE BENCHMARK NO. "M-31"
COUNTY OF RIVERSIDE BENCHMARK - 3 1/4" ALUMINUM DISK MARKED M-31, LOCATED FLUSH AT THE SOUTH WEST CORNER OF BRIDGE ON TOP OF SIDEWALK NEAR FACE OF CURB LOCATED AT THE CROSSING OF PERRIS BLVD. AND RIV. CO. FLOOD CONTROL CHANNEL (PERRIS LATERAL 7), 43 FT. WEST OF CENTERLINE OF PERRIS BLVD. AND 4.5 FT. EAST OF CONCRETE BRIDGE BARRIER. (EDGE OF BRIDGE) MARKED M-103 D.W.R. IN TOP OF CONC. POST FLUSH W/ GROUND
ELEVATION = 1474.674' (NAVD 1929)

REF.	REVISIONS	ENGINEER APPR.	ENGINEER DATE	RCFC/ APPR	RCFC/ DATE
	CHANGED SLOPE TO 0.0018, ADDED MH, ADDED				
2	NEW 10'S, CHANGED 42" LAT TO 24" LAT, ADDED				
	BX. UTILITIES, RELOCATE UTILITIES, REV. S.D.	H.I.A.	1/5/16	JK	2/23/16
1	CHANGED C.I.P. RCB TO PRE-CAST RCB PER APWA 330.0	H.I.A.	2/9/16	JK	2/23/16

DESIGNED BY: BW
DRAWN BY: ET
DATE DRAWN:

APPROVED BY:
Thienes Engineering, Inc.
CIVIL ENGINEERING • LAND SURVEYING
14349 FIRESTONE BOULEVARD
LA MIRADA, CALIFORNIA 90638
PH.(714)521-4811 FAX(714)521-4173
HAIDOOK I. AGHAIAN Date: 11/18/14
RCE NO. 43293

REGISTERED PROFESSIONAL ENGINEER HAIDOOK I. AGHAIAN R.C.E. NO. 43293 Exp. 3-31-16 CIVIL STATE OF CALIFORNIA

RIVERSIDE COUNTY FLOOD CONTROL AND WATER CONSERVATION DISTRICT
RECOMMENDED FOR APPROVAL BY: Mark A. Wills
PLANNING ENGINEER
DATE: 1/20/2015
APPROVED BY:
CHIEF ENGINEER
DATE: 1/20/15

CITY OF PERRIS
APPROVED BY:
CITY ENGINEER DATE: 12-15-14
RECOMMENDED DATE:

PERRIS VALLEY MDP LINE "A-B"

PROJECT NO. 4-0-00537
DRAWING NO. 4-1063
SHEET NO. 1 OF 18

Last Update: 11/18/14
O:\2700-2799\2702\2702F\2702SD01.dwg

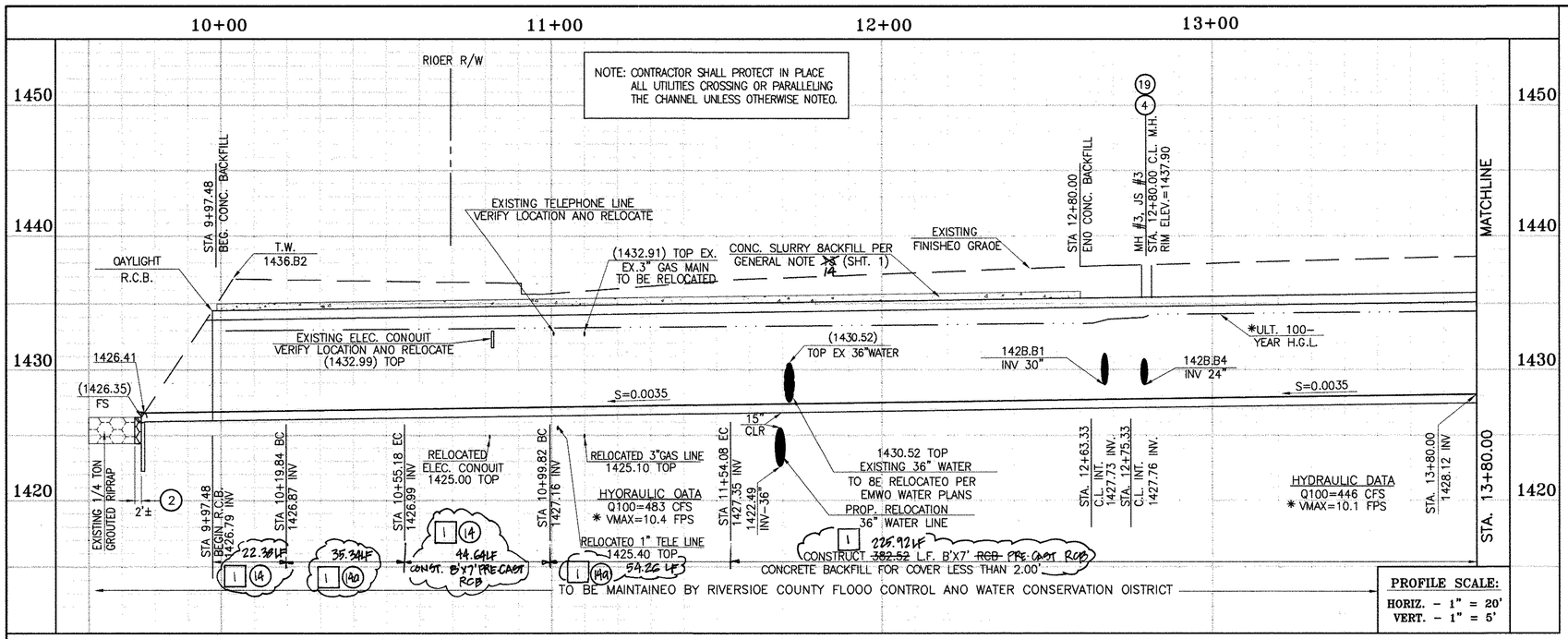

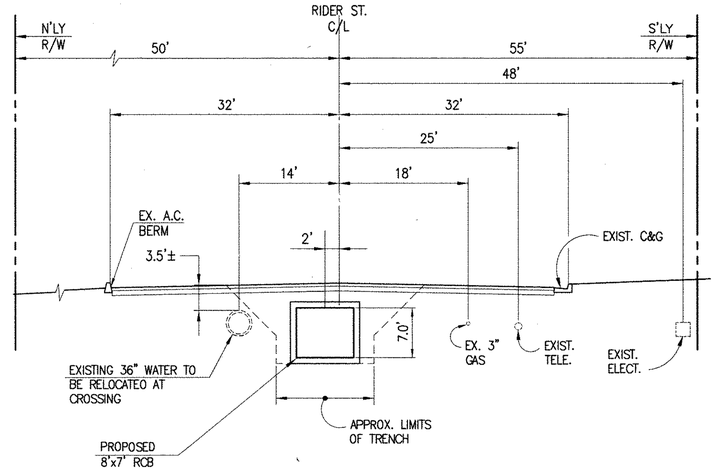

SECTION AT STA. 12+00.00

FROM STA 11+54.0B TO STA 12+11.B5

0 5 10 20

SCALE:1"=10'

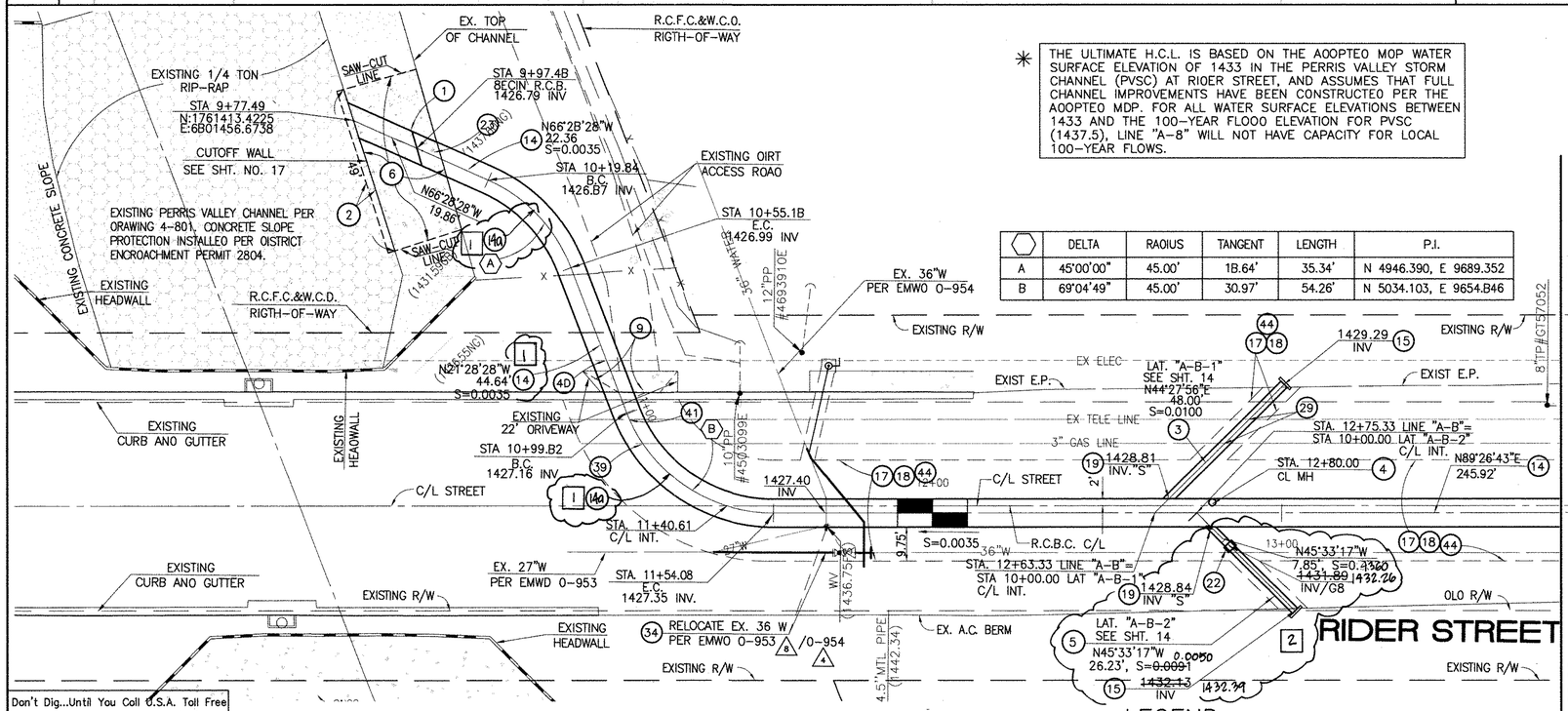

	DELTA	RAOIUS	TANGENT	LENGTH	P.I.
A	45°00'00"	45.00'	1B.64'	35.34'	N 4946.390, E 9689.352
B	69°04'49"	45.00'	30.97'	54.26'	N 5034.103, E 9654.B46

✳ THE ULTIMATE H.C.L. IS BASED ON THE AOOPTEO MOP WATER SURFACE ELEVATION OF 1433 IN THE PERRIS VALLEY STORM CHANNEL (PVSC) AT RIOER STREET, AND ASSUMES THAT FULL CHANNEL IMPROVEMENTS HAVE BEEN CONSTRUCTEO PER THE AOOPTEO MDP. FOR ALL WATER SURFACE ELEVATIONS BETWEEN 1433 AND THE 100-YEAR FLOOO ELEVATION FOR PVSC (1437.5), LINE "A-8" WILL NOT HAVE CAPACITY FOR LOCAL 100-YEAR FLOWS.

LEGEND:

△1 — REVISION SYM8OL ANO NUMBER PER EMWO REOUIREMENT (TYPICAL TO ALL SHEETS)

STORM DRAIN CONSTRUCTION NOTES:

1. DAYLICHT R.C.B. ROOF PARALLEL TO TOP OF SLOPE. TAPER OOWN R.C.B. SIOEWALLS WITH SLOPE FACE. SEE OETAILS ON SHT. NO. 1B.
2. REMOVE ANO REPLACE APPROXIMATELY 2' WIOE 1/4 TON GROUTEO RIPRAP, MATCH EXISTINC THICKNESS.
3. CONSTRUCT 30" R.C.P, 0-LOAO PER PLAN.
4. CONSTRUCT MANHOLE NO. 3 PER R.C.F.C.&W.C.O. STO OWC. MH253
5. CONSTRUCT 24" R.C.P, 0-LOAO PER PLAN.
6. SAWCUT ANO REMOVE EXISTINC CONCRETE SIOESLOPE. SALVACE 30" MINIMUM LONCITUOINAL ANO/OR TRANSVERSE REBAR FROM EXISTINC SLOPE PROTECTION AT ALL SAWCUT LOCATIONS. SPLICE SALVACED REBAR TO NEW CONCRETE REINFORCINC PER CURRENT ACI COOE. REPLACEMENT CONCRETE TO MATCH EXISTINC THICKNESS, OR MINIMUM 6" THICK, WHICHEVER IS CREATER WITH #4 BARS @ 18" ON CENTER EACH WAY.
9. REMOVE ANO REPLACE APPROACH EXISTINC ORIVEWAY ((SEE SHEET NO. 1B).
14. CONSTRUCT B' X 7' RCB PER CALTRANS STO PLAN NO. OBO. ON 45' RADIUS CURVEO SECTIONS, INSIOE WALL (41' RAOIUS) MUST 8E SMOOTH CURVEO ANO OUSIOE WALL (49' RAOIUS) MUST HAVE MAXIMUM WALL CHORO LENGTH OF 8.0'
15. CONSTRUCT CONCRETE BULKHEAO PER R.C.F.C.&W.C.D. STO. OWG. MB16
17. SAWCUT AND REMOVE EXISTINC A.C. PAVEMENT.
1B. UTILITY TRENCH ANO SURFACE REPAIR PER CITY STANOARD ON SHT. NO. 1B, MOOIFIEO TO ACCOMMOOATE SLURRY BACKFILL WHERE BOX COVER IS LESS THAN 2.0'.
19. CONSTRUCT JUNCTION STRUCTURE NO. 3 PER R.C.F.C.&W.C.O. STD. 0WG. JS228.
22. CONSTRUCT CONCRETE COLLAR PER R.C.F.C.&W.C.O. STO 0WG. MB03.
23. CONSTRUCT SLOPEO PROTECTION BARRIER PER A.P.W.A. STO. PLAN NO. 360-0.
29. PROTECT IN PLACE EXISTING UTILITY
34. RELOCATE EXISTINC WATER LINE PER E.M.W.O. PLANS.
39. RELOCATE EXISTING GAS LINE.
40. RELOCATE EXISTING ELECTRICAL LINE.
41. RELOCATE EXISTINC TELEPHONE LINE.
44. SAWCUT, REMOVE ANO REPLACE A.C. PAVEMENT SURFACE REPAIR PER CITY STO. ON SHEET 1B. SEE SEPARTE PAVING PLAN.

I 14 CONSTRUCT 8'X7' PRE-CAST RCB PER APWA STD PLAN 390-0 SEE JOINT SEALANT NOTE ON SHT. 1

Don't Dig...Until You Call U.S.A. Toll Free 1-800-227-2600 for the location of buried utility lines. Don't disrupt vital services.
TWO WORKING DAYS BEFORE YOU DIG

BENCH MARK

COUNTY OF RIVERSIDE BENCHMARK NO. "H-31"

COUNTY OF RIVERSIDE BENCHMARK - 3 1/4" ALUMINUM DISK MARKED H-31, LOCATED FLUSH AT THE SOUTH WEST CORNER OF BRIDGE ON TOP OF SIDEWALK NEAR FACE OF CURB LOCATED AT THE CROSSING OF PERRIS BLVD. AND RTE. CO. FLOOD CONTROL CHANNEL (PERRIS LATERAL "A") 43 FT. WEST OF CENTERLINE OF PERRIS BLVD. AND 4.5 FT. EAST OF CONCRETE BRIDGE BARRIER. (EDGE OF BRIDGE) MARKED R-102 D.M.R. IN TOP OF CONC. POST FLUSH W/ GROUND

ELEVATION = 1474.674' (NAVD 1929)

REF.	REVISIONS	ENGINEER APPR.	ENGINEER DATE	RCFC/ APPR.	RCFC/ DATE
2	CHANGED SLOPE TO 2.0HIS, ADDED MH; ADDED NEW B"S, CHANGED 42" LAT TO 24" LAT, ADDED EX. UTILITIES, RELOCATE UTILITIES, REVISED SD.	H.I.A	2/3/16		2/23/16
1	CHANGED C.I.P. RCB TO PRE-CAST RCB PER APWA 390	H.I.A	2/3/16		2/27/16

DESIGNED BY: BN
DRAWN BY: ET
DATE DRAWN:

APPROVED BY: Thienes Engineering, Inc. CIVIL ENGINEERING • LAND SURVEYING 14349 FIRESTONE BOULEVARD LA MIRADA, CALIFORNIA 90638 PH.(714)521-4811 FAX(714)521-4173
Haidaek Aghaian Date: 11/18/14
HAIDOK I. AGHAIAN RCE NO. 43293

REGISTERED PROFESSIONAL ENGINEER HAIDOK L AGHAIAN R.C.E. NO. 43293 Exp. 3-31-16 CIVIL STATE OF CALIFORNIA

RIVERSIDE COUNTY FLOOD CONTROL AND WATER CONSERVATION DISTRICT
RECOMMENDED FOR APPROVAL BY: DATE: 1/20/2015
APPROVED BY: Mark H. Wills DATE: 1/20/2015

CITY OF PERRIS APPROVED BY:
CITY ENGINEER DATE: 12-15-14
RECOMMENDED DATE:

CITY OF PERRIS FILE NO. P8-1013

PERRIS VALLEY MDP LINE "A-B"

FROM STA. 9+97.48 TO STA. 13+80

PROJECT NO. 4-0-00537
DRAWING NO. 4-1063
SHEET NO. 2 OF 18

Last Update: 11/18/14
O:\2700-2799\2702\2702F\2702SD02.dwg

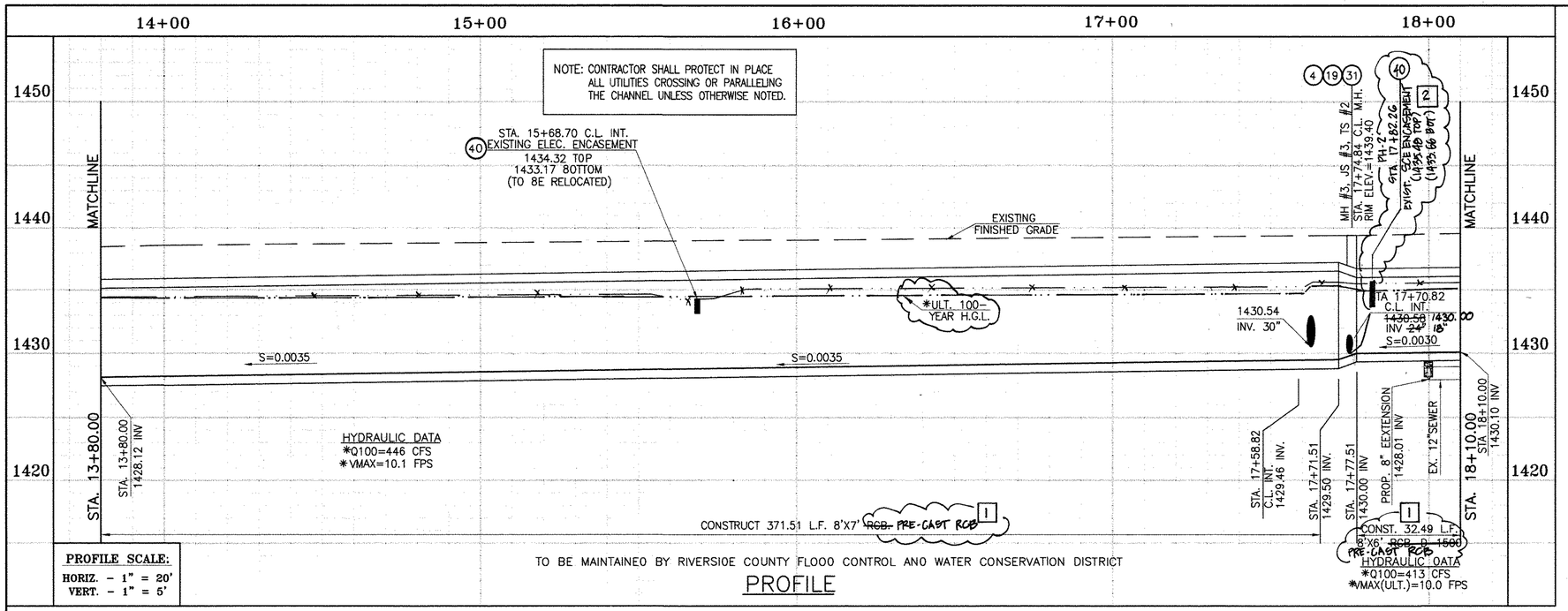

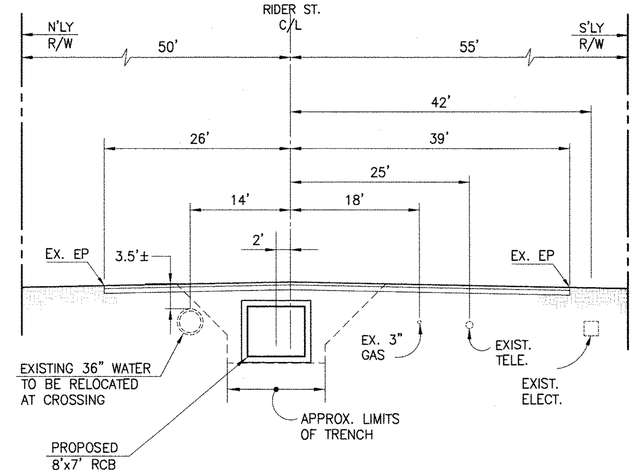

SECTION AT STA. 16+50.00

STA 14+15.65 TO STA 17+49.84

0 5 10 20

SCALE:1"=10'

✳ THE ULTIMATE H.G.L. IS BASED ON THE ADOPTED MDP WATER SURFACE ELEVATION OF 1433 IN THE PERRIS VALLEY STORM CHANNEL (PVSC) AT RIDER STREET, AND ASSUMES THAT FULL CHANNEL IMPROVEMENTS HAVE BEEN CONSTRUCTED PER THE ADOPTED MDP. FOR ALL WATER SURFACE ELEVATIONS BETWEEN 1433 AND THE 100-YEAR FLOOD ELEVATION FOR PVSC (1437.5), LINE "A-B" WILL NOT HAVE CAPACITY FOR LOCAL 100-YEAR FLOWS.

CAUTION:
PROPOSED WORK IS IN PROXIMITY OF HIGH PRESSURE GAS LINES

	DELTA	RADIUS	TANGENT	LENGTH	P.I.
E	45°01'13"	22.50'	9.32'	17.68'	N 5006.356, E 8986.091

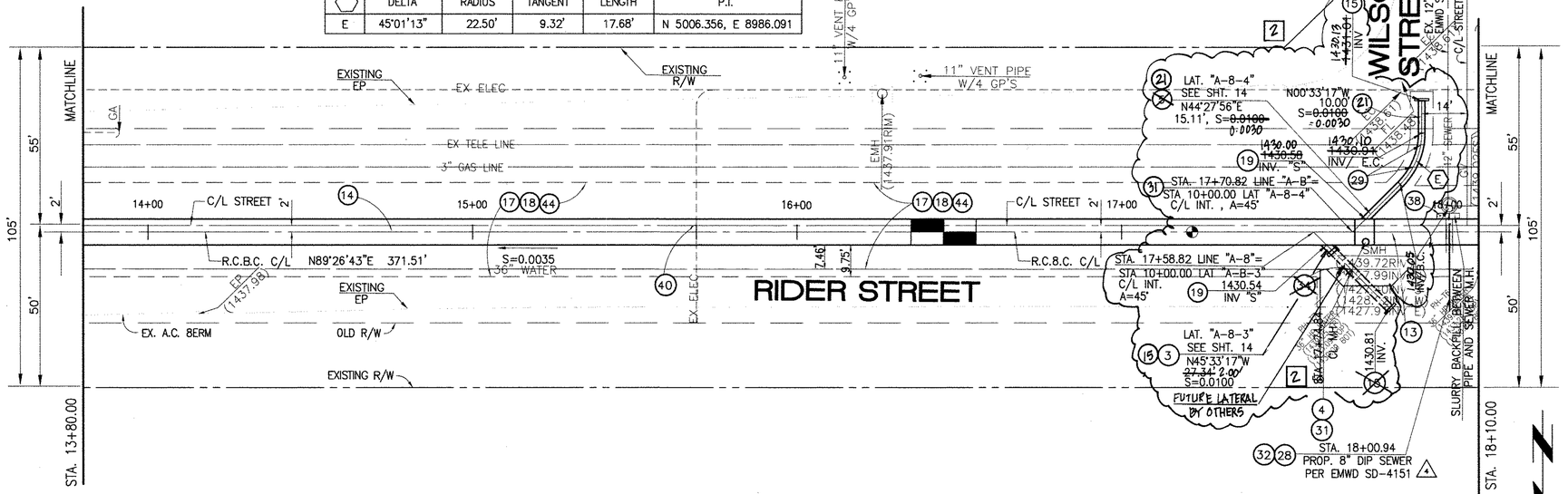

0 10 20 40

SCALE:1"=20'

STORM DRAIN CONSTRUCTION NOTES:

(3) CONSTRUCT 30" R.C.P, 0-LOAD PER PLAN.
(4) CONSTRUCT MANHOLE NO. 3 PER R.C.F.C.&W.C.D. STD DWG. MH253
(5) CONSTRUCT 24" R.C.P, 0-LOAD PER PLAN.
(1) (13) CONSTRUCT 8' X 6' ~~RCB PER CALTRANS STD PLAN NO. D80 OR APPROVED EQUAL~~ PRE CAST RCB APWA STD PLAN 3900 OR APPROVED EQUAL SEE JOINT SEALANT NOTE ON SHT. 1.
(14) CONSTRUCT 8' X 7' ~~RCB PER CALTRANS STD PLAN NO. D80 OR APPROVED EQUAL~~ PRE-CAST RCB APWA STD PLAN 3900 OR APPROVED EQUAL. SEE JOINT SEALANT NOTE ON SHT. 1.
(15) CONSTRUCT CONCRETE BULKHEAD PER R.C.F.C.&W.C.D. STD DWG. M816.
(17) SAWCUT AND REMOVE EXISTING A.C. PAVEMENT.
(18) UTILITY TRENCH AND SURFACE REPAIR PER CITY STANDARD ON SHT. NO. 18, MODIFIED TO ACCOMMODATE SLURRY BACKFILL WHERE BOX COVER IS LESS THAN 2.0'.
(19) CONSTRUCT JUNCTION STRUCTURE NO. 3 PER R.C.F.C.&W.C.O. STD. OWG. JS228.
(28) CONSTRUCT SEWER PROTECTION PER R.C.F.C.&W.C.O. STD. OWG. M807.
(29) PROTECT IN PLACE EXISTING UTILITIES.
(31) CONSTRUCT MODIFIED TRANSITION STRUCTURE NO.2 PER R.C.F.C.&W.C.O. STD. DWG. TS302.
(32) INSTALL 8" DIP SEWER. ENCASED WITH 2500 PSI CONCRETE PER CALTRANS STD PLAN NO. 080.
(34) RELOCATE EXISTING WATER LINE PER EMWD PLANS (36" WATER LINE).
(38) SLURRY BACKFILL BETWEEN RCB AND MANHOLE.
(40) RELOCATE EXISTING ELECTRICAL LINE.
(2) (44) SAWCUT, REMOVE AND REPLACE A.C. PAVEMENT SURFACE REPAIR PER CITY STD. ON SHEET 18.
(21) CONSTRUCT 18" R.C.P., D-LOAD PER PLAN.

Don't Dig...Until You Call U.S.A. Toll Free
1-800-227-2600
for the location of buried utility lines.
Don't disrupt vital services.
TWO WORKING DAYS BEFORE YOU DIG

BENCH MARK
COUNTY OF RIVERSIDE BENCHMARK NO. "M-31"
COUNTY OF RIVERSIDE BENCHMARK - 3 1/4" ALUMINUM DISK MARKED M-31, LOCATED FLUSH AT THE SOUTH WEST CORNER OF BRIDGE ON TOP OF SIDEWALK NEAR FACE OF CURB LOCATED AT THE CROSSING OF PERRIS BLVD. AND RW. CO. FLOOD CONTROL CHANNEL (PERRIS LATERAL "A"), 43 FT. WEST OF CENTERLINE OF PERRIS BLVD. AND 4.5 FT. EAST OF CONCRETE BRIDGE BARRIER. (EDGE OF BRIDGE) MARKED R-102 U.N.R. IN TOP OF CONC. POST FLUSH W/ GROUND
ELEVATION = 1474.674' (NAVD 1929)

REF.	REVISIONS	ENGINEER APPR.	ENGINEER DATE	RCFC/ APPR.	RCFC/ DATE
2	CHANGED SLOPE TO 0.0035, ADDED MH, ADDED NEW D'S, CHANGED 42" LAT TO 24" LAT, ADDED BY.				
	UTILITIES, RELOCATE UTILITIES, REVISED S.D.	H.A.	2/3/16	DG	2/23/16
1	CHANGED C.I.P. RCB TO PRE-CAST RCB APWA 3900	H.A.	2/3/16	DG	2/23/16

DESIGNED BY: BW
DRAWN BY: ET
DATE DRAWN:

APPROVED BY:
Thienes Engineering, Inc.
CIVIL ENGINEERING • LAND SURVEYING
14349 FIRESTONE BOULEVARD
LA MIRADA, CALIFORNIA 90638
PH.(714)521-4811 FAX(714)521-4173
Haidook Aghian Date: 11/18/14
HAIDOOK I. AGHAIAN RCE NO. 43293

REGISTERED PROFESSIONAL ENGINEER HAIDOOK I. AGHAIAN R.C.E. NO. 43293 Exp. 3-31-16 CIVIL STATE OF CALIFORNIA

KRH 4/10/14

RIVERSIDE COUNTY FLOOD CONTROL AND WATER CONSERVATION DISTRICT
RECOMMENDED FOR APPROVAL BY: DATE: 1/20/2015
APPROVED BY: Mark H. Wills DATE: 1/20/2015

CITY OF PERRIS
APPROVED BY:
CITY ENGINEER DATE: 12-15-14
RECOMMENDED DATE:

CITY OF PERRIS
FILE NO. P8-1013

PERRIS VALLEY MDP LINE "A-B"

FROM STA. 13+80 TO STA. 18+10

PROJECT NO. 4-0-00537
DRAWING NO. 4-1063
SHEET NO. 3 OF 18

Last Update: 11/18/14
O:\2700-2799\2702\2702F\2702SD03.dwg

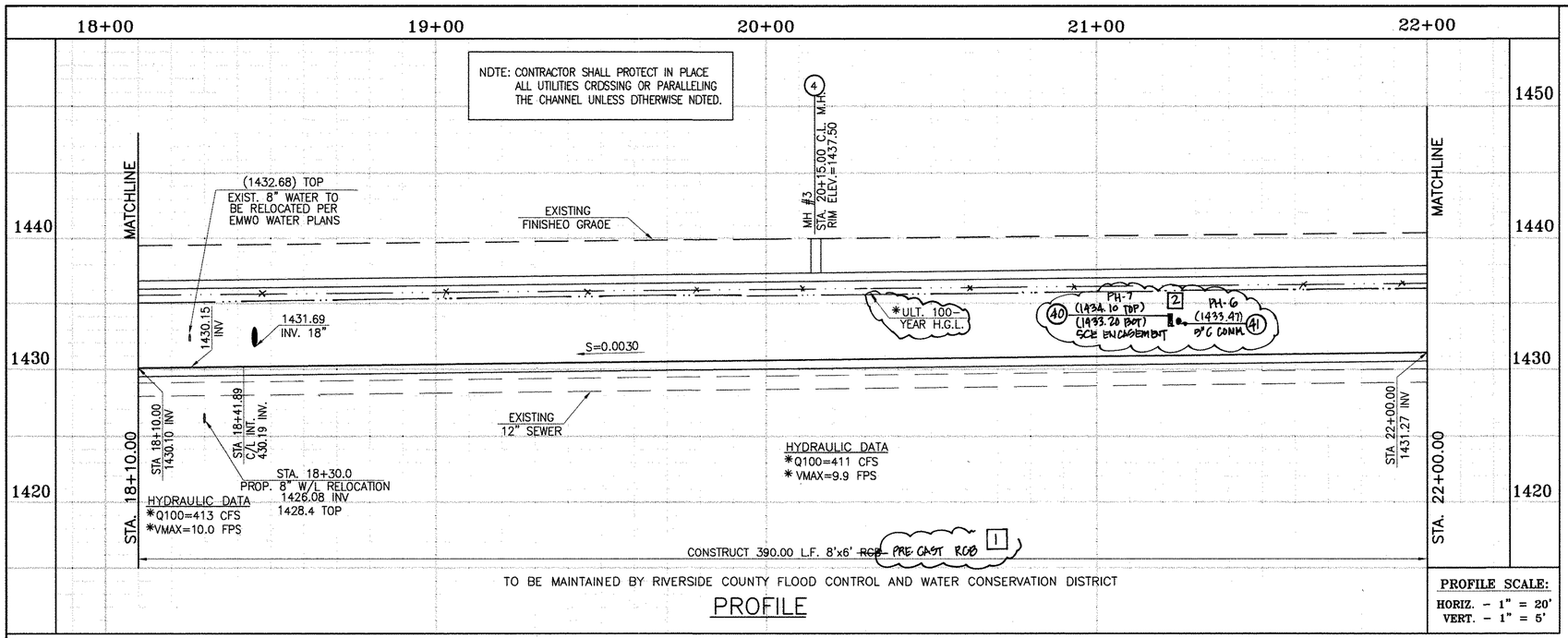

PROFILE

PROFILE SCALE:
HORIZ. – 1" = 20'
VERT. – 1" = 5'

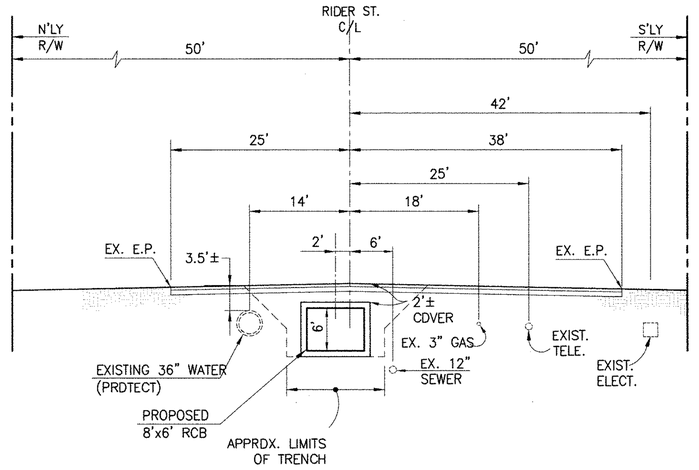

SECTION AT STA. 20+00.00

FROM STA 18+63.90 TO STA 22+00

0 5 10 20

SCALE:1"=10'

CAUTION:
PROPOSED WORK IS IN PROXIMITY OF HIGH PRESSURE GAS LINES

✳ THE ULTIMATE H.G.L. IS BASED ON THE ADOPTED MDP WATER SURFACE ELEVATION OF 1433 IN THE PERRIS VALLEY STORM CHANNEL (PVSC) AT RIDER STREET, AND ASSUMES THAT FULL CHANNEL IMPROVEMENTS HAVE BEEN CONSTRUCTED PER THE ADOPTED MDP. FOR ALL WATER SURFACE ELEVATIONS BETWEEN 1433 AND THE 100-YEAR FLOOD ELEVATION FOR PVSC (1437.5), LINE "A-B" WILL NOT HAVE CAPACITY FOR LOCAL 100-YEAR FLOWS.

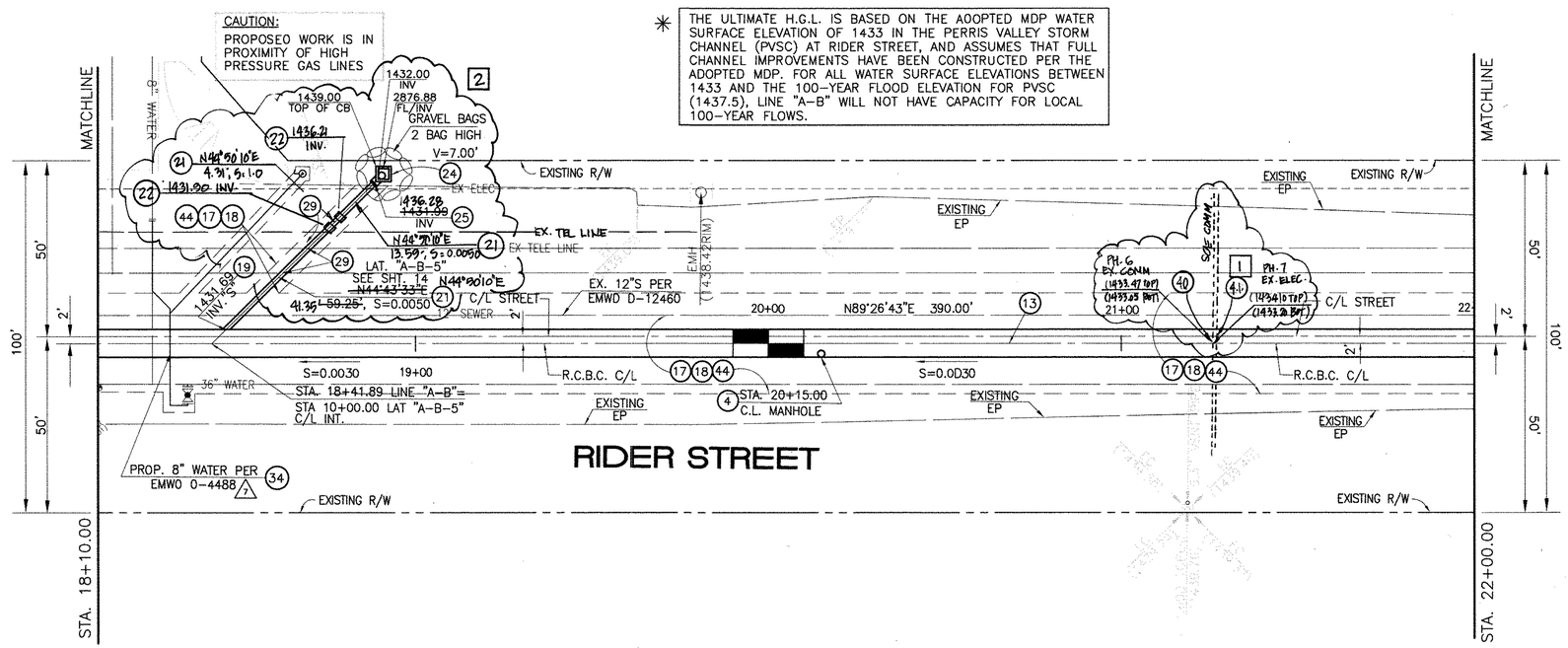

RIDER STREET

PLAN

0 10 20 40

SCALE:1"=20'

STORM DRAIN CONSTRUCTION NOTES:

(4) CONSTRUCT MANHOLE NO. 3 PER R.C.F.C.&W.C.O. STO OWG. MH253

(1) (13) CONSTRUCT 8' X 6' ~~RCB PER CALTRANS STD PLAN NO. D80 OR APPROVED EQUAL.~~ PRE-CAST RCB PWA STD PLAN 380-0 OR APPRVED EQUAL. SEE JOINT SEALANT NOTE ON SHT. 1.

(17) SAWCUT ANO REMOVE EXISTING A.C. PAVEMENT.

(18) UTILITY TRENCH AND SURFACE REPAIR PER CITY STANOARO ON SHT. NO. 18, MOOIFIEO TO ACCOMMOOATE SLURRY BACKFILL WHERE BOX COVER IS LESS THAN 2.0'.

(19) CONSTRUCT JUNCTION STRUCTURE NO. 3 PER R.C.F.C.&W.C.O. STO. OWG. JS228.

(21) CONSTRUCT 18" R.C.P, O-LOAO PER SHEET #14.

(24) CONSTRUCT CONCRETE ORDP INLET PER R.C.F.C.&W.C.O. STO DWG. CB110

(25) CONSTRUCT SPECIAL CONNECTION PER R.C.F.C.&W.C.O. STO OWG. CB109

(29) PROTECT IN PLACE EXISTING UTILITIES.

(34) RELOCATE EXISTING WATER LINE PER E.M.W.O. PLANS.

(44) SAWCUT, REMOVE ANO REPLACE A.C. PAVEMENT SURFACE REPAIR PER CITY STO. ON SHEET 18. SEE SEPARATE PAVING PLANS.

(2) (22) CONSTRUCT CONCRETE COLLAR PER R.C.F.C.&W.C.D. STD DWG M803.

(40) RELOCATE EXISTING ELECTRICAL LINE.

(41) RELOCATE EXISTING TELEPHONE LINE.

Don't Dig...Until You Call U.S.A. Toll Free
1-800-227-2600
for the location of buried utility lines.
Don't disrupt vital services.
TWO WORKING DAYS BEFORE YOU DIG

BENCH MARK
COUNTY OF RIVERSIDE BENCHMARK NO. "M-31"
COUNTY OF RIVERSIDE BENCHMARK - 3 1/4" ALUMINUM DISK MARKED M-31, LOCATED FLUSH AT THE SOUTH WEST CORNER OF BRIDGE ON TOP OF SIDEWALK NEAR FACE OF CURB LOCATED AT THE CROSSING OF PERRIS BLVD. AND RAI. CO. FLOOD CONTROL CHANNEL (PERRIS LATERAL 7-7, 43 FT. WEST OF CENTERLINE OF PERRIS BLVD. AND 4.5 FT. EAST OF CONCRETE BRIDGE BARRIER. (EDGE OF BRIDGE) MARKED R-102 D.W.R. IN TOP OF CONC. POST FLUSH W/ GROUND
ELEVATION = 1474.674' (NAVD 1929)

REF.	REVISIONS	ENGINEER APPR.	ENGINEER DATE	RCFC/ APPR.	RCFC/ DATE
[2]	CHANGED SLOPE TO 0.0078, ADDED MH, ADDED NEW 10°S, CHANGED 42° LAT TO 22° LAT. ADDED				
[1]	EX. UTILITIES, RELOCATE UTILITIES, REV. G.D. CHANGED C.I.P. RCB TO PRE-CAST RCB PWA 380-0	H.I.A. H.I.A.	2/3/16 2/3/16	2/3/16 2/3/16	2/3/16 2/3/16

DESIGNED BY: BW
DRAWN BY: ET
DATE DRAWN:

APPROVED BY:
Thienes Engineering, Inc.
CIVIL ENGINEERING • LAND SURVEYING
14349 FIRESTONE BOULEVARD
LA MIRADA, CALIFORNIA 90638
PH.(714)521-4811 FAX(714)521-4173
Haidook Aghaian Date: 11/18/14
HAIDOOK I. AGHAIAN RCE NO. 43293

REGISTERED PROFESSIONAL ENGINEER HAIDOOK I. AGHAIAN R.C.E. NO. 43293 Exp. 3-31-16 CIVIL STATE OF CALIFORNIA

KRH 4/10/14

RIVERSIDE COUNTY FLOOD CONTROL AND WATER CONSERVATION DISTRICT
RECOMMENDED FOR APPROVAL BY: DATE: 1/22/2015
APPROVED BY: DATE: 1/20/2015

CITY OF PERRIS
APPROVED BY:
CITY ENGINEER DATE: 12-15-14
RECOMMENDED DATE:

CITY OF PERRIS
FILE NO. P8-1013

PERRIS VALLEY MDP LINE "A-B"

FROM STA. 18+10 TO STA. 22+00

PROJECT NO. 4-0-00537
DRAWING NO. 4-1063
SHEET NO. 4 OF 18

Last Update: 11/18/14
O:\2700-2799\2702\2702P\2702SD04.dwg

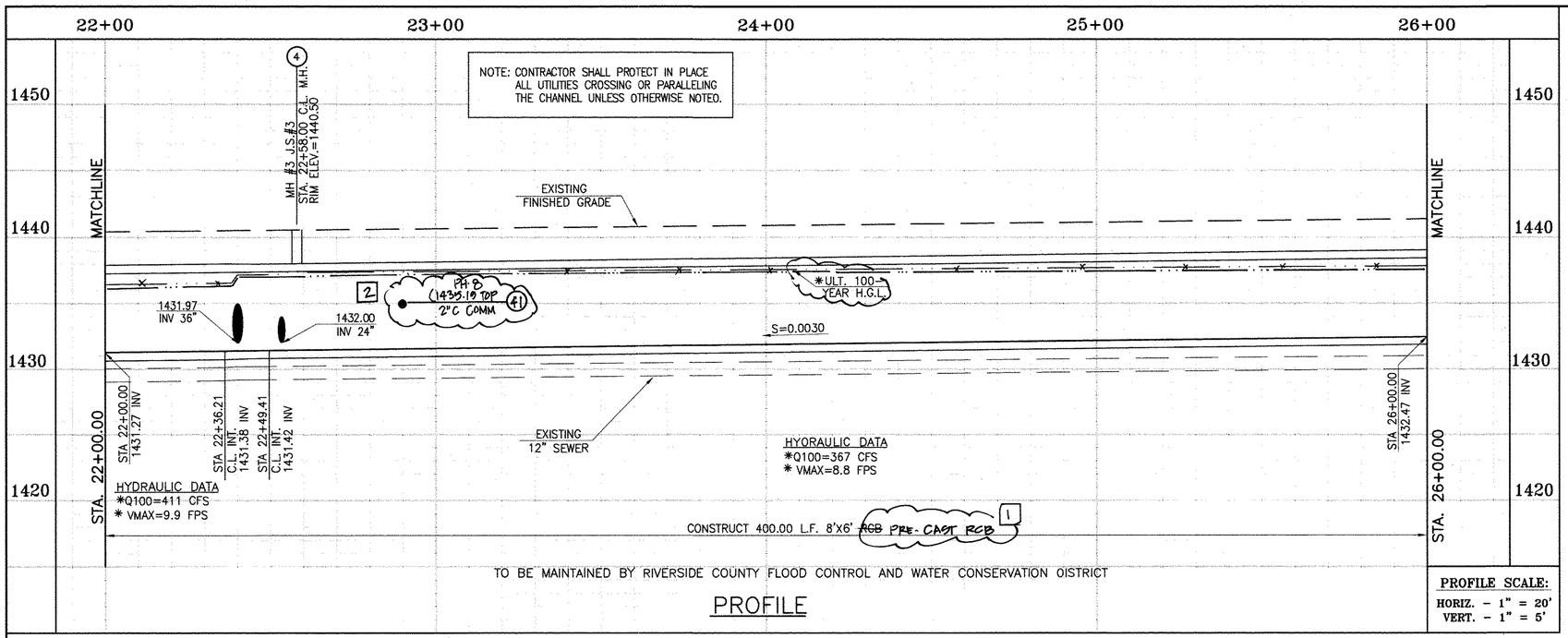

PROFILE

PROFILE SCALE:
HORIZ. - 1" = 20'
VERT. - 1" = 5'

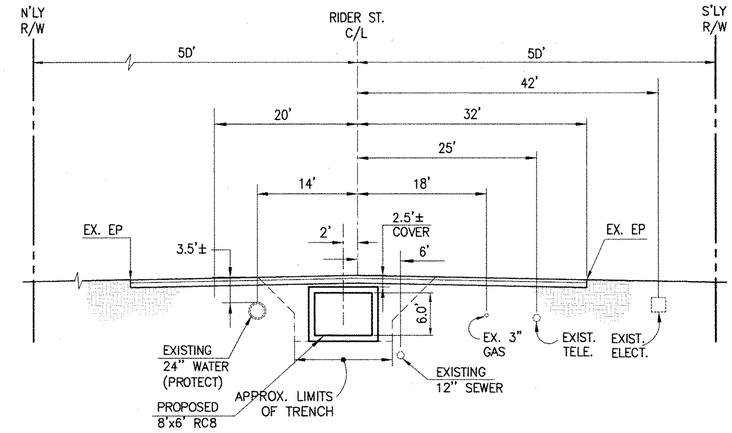

SECTION AT STA. 24+00.00

FROM STA 22+00 TO STA 26+00

0 5 10 20

SCALE:1"=10'

CAUTION:
PROPOSED WORK IS IN PROXIMITY OF HIGH PRESSURE GAS LINES

✳ THE ULTIMATE H.G.L. IS BASED ON THE ADOPTED MDP WATER SURFACE ELEVATION OF 1433 IN THE PERRIS VALLEY STORM CHANNEL (PVSC) AT RIDER STREET, AND ASSUMES THAT FULL CHANNEL IMPROVEMENTS HAVE BEEN CONSTRUCTED PER THE ADOPTED MDP. FOR ALL WATER SURFACE ELEVATIONS BETWEEN 1433 AND THE 100-YEAR FLOOD ELEVATION FOR PVSC (1437.5), LINE "A-8" WILL NOT HAVE CAPACITY FOR LOCAL 100-YEAR FLOWS.

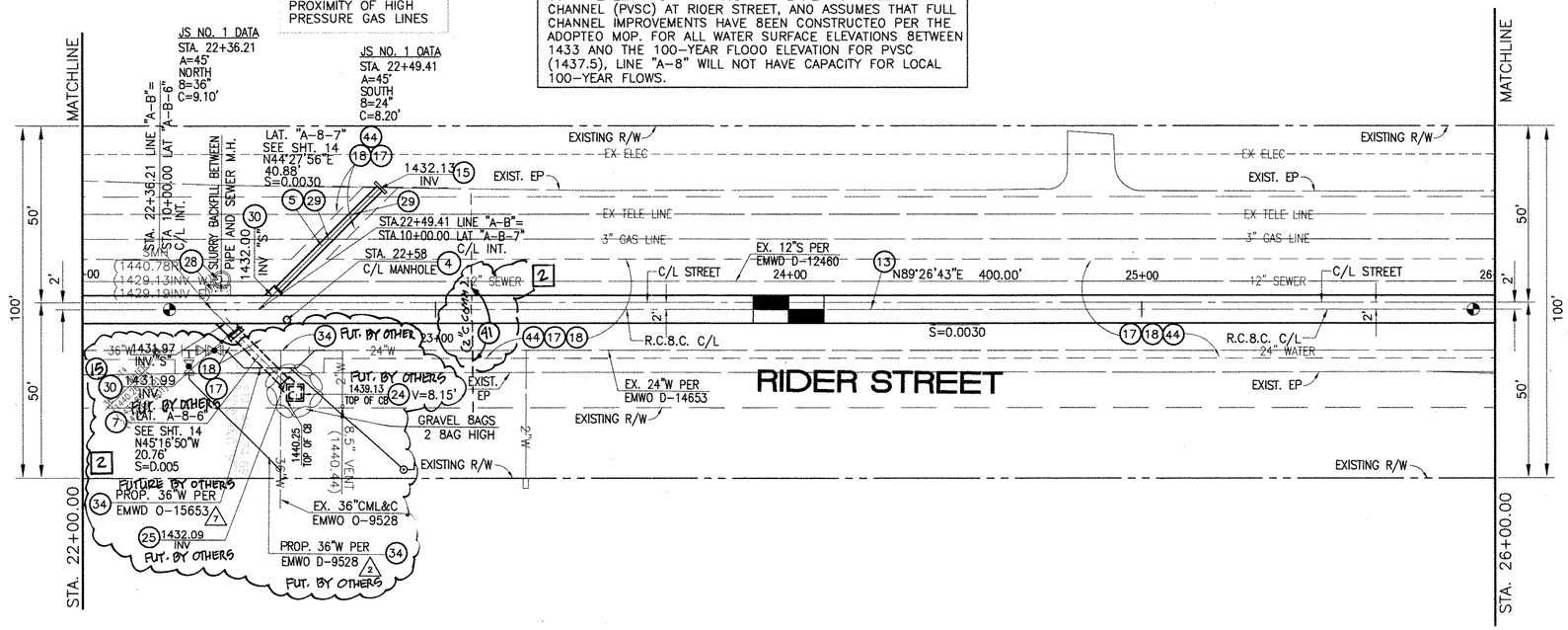

PLAN

0 10 20 40

SCALE:1"=20'

STORM DRAIN CONSTRUCTION NOTES:

(4) CONSTRUCT MANHOLE NO. 3 PER R.C.F.C.&W.C.D. STD OWG. MH253
(5) CONSTRUCT 24" R.C.P, O-LOAD PER PLAN.
(7) CONSTRUCT 36" R.C.P, O-LOAD PER PLAN.
[1] (13) CONSTRUCT 8' X 6' ~~RCB PER CALTRANS STD PLAN NO. D86 OR APPROVED EQUAL.~~ PRECAST RCB PER APWA STD PLAN 330-0 OR APPROVED EQUAL. SEE JOINT SEALANT NOTE ON SHT. 1.
(15) CONSTRUCT CONCRETE BULKHEAD PER R.C.F.C.&W.C.O. STD OWG. M816.
(17) SAWCUT AND REMOVE EXISTING A.C. PAVEMENT.
(18) UTILITY TRENCH AND SURFACE REPAIR PER CITY STANDARD ON SHT. NO. 18, MODIFIED TO ACCOMMODATE SLURRY BACKFILL WHERE BOX COVER IS LESS THAN 2.0'.
(24) CONSTRUCT CONCRETE DROP INLET PER R.C.F.C.&W.C.O. STD OWG. C8110 W=3.50'
(25) CONSTRUCT SPECIAL CONNECTION PER R.C.F.C.&W.C.O. STD OWG. C8109
(28) CONSTRUCT SEWER PROTECTION PER R.C.F.C.&W.C.O. STD. DWG. M807. OR CONCRETE ENCASEMENT NO. 2 PER EMWD STD. NO. S8-157.
(29) PROTECT IN PLACE EXISTING UTILITIES.
(30) CONSTRUCT JUNCTION STRUCTURE NO.1 PER R.C.F.C.&W.C.O. STD. OWG. JS226.
(34) RELOCATE EXISTING WATER LINE PER E.M.W.O. PLANS.
(44) SAWCUT, REMOVE AND REPLACE A.C. PAVEMENT SURFACE REPAIR PER CITY STD. ON SHEET 18. SEE SEPARATE PAVING PLANS.
[2] (41) ~~RELOCATE EXISTING TELEPHONE LINE~~

Don't Dig...Until You Call U.S.A. Toll Free
1-800-227-2600
for the location of buried utility lines.
Don't disrupt vital services.
TWO WORKING DAYS BEFORE YOU DIG

BENCH MARK
COUNTY OF RIVERSIDE BENCHMARK NO. "24-31"
COUNTY OF RIVERSIDE BENCHMARK - 3 1/4" ALUMINUM DISK MARKED M-31, LOCATED FLUSH AT THE SOUTH WEST CORNER OF BRIDGE ON TOP OF SIDEWALK NEAR FACE OF CURB LOCATED AT THE CROSSING OF PERRIS BLVD. AND RIV. CO. FLOOD CONTROL CHANNEL (PERRIS LATERAL 2), 43 FT. WEST OF CENTERLINE OF PERRIS BLVD. AND 4.5 FT. EAST OF CONCRETE BRIDGE BARRIER. (EDGE OF BRIDGE) MARKED R-102 D.W.R. IN TOP OF CONC. POST FLUSH W/ GROUND
ELEVATION = 1474.674' (NAVD 1929)

REF.	REVISIONS	ENGINEER APPR.	ENGINEER DATE	RCFC/ APPR.	RCFC/ DATE
[2]	CHANGED SLOPE TO 0.0015, NOTED MH, ADDED NEW 10'S CHANGED 42" LAT TO 24" LAT, ADDED EX. UTILITIES, RELOCATE UTILITIES, REV. S.D.	H.L.A.	2/3/16	7/13/16	7/13/16
[1]	CHANGED C.I.P. RCB TO PRECAST RCB APWA 330-0	H.L.A.	2/3/16	7/20/16	7/20/16

DESIGNED BY: BW
DRAWN BY: ET
DATE DRAWN:

APPROVED BY:
Thienes Engineering, Inc.
CIVIL ENGINEERING • LAND SURVEYING
14349 FIRESTONE BOULEVARD
LA MIRADA, CALIFORNIA 90638
PH.(714)521-4811 FAX(714)521-4173
Haidook I. Aghaian Date: 11/18/14
HAIDOOK I. AGHAIAN RCE NO. 43293

REGISTERED PROFESSIONAL ENGINEER HAIDOOK I. AGHAIAN R.C.E. NO. 43293 Exp. 3-31-16 CIVIL STATE OF CALIFORNIA

RIVERSIDE COUNTY FLOOD CONTROL AND WATER CONSERVATION DISTRICT
RECOMMENDED FOR APPROVAL BY: DATE: 4/24/2015
APPROVED BY: Mark A. Wills DATE: 1/20/2015

CITY OF PERRIS
APPROVED BY: CITY ENGINEER DATE: 12-18-14
RECOMMENDED DATE:

KRH 4/10/14

CITY OF PERRIS
FILE NO. P8-1013

PERRIS VALLEY MDP LINE "A-B"

FROM STA. 22+00 TO STA. 26+00

PROJECT NO. 4-0-00537
DRAWING NO. 4-1063
SHEET NO. 5 OF 18

Last Update: 11/18/14
O:\2700-2799\2702\2702F\2702SD05.dwg

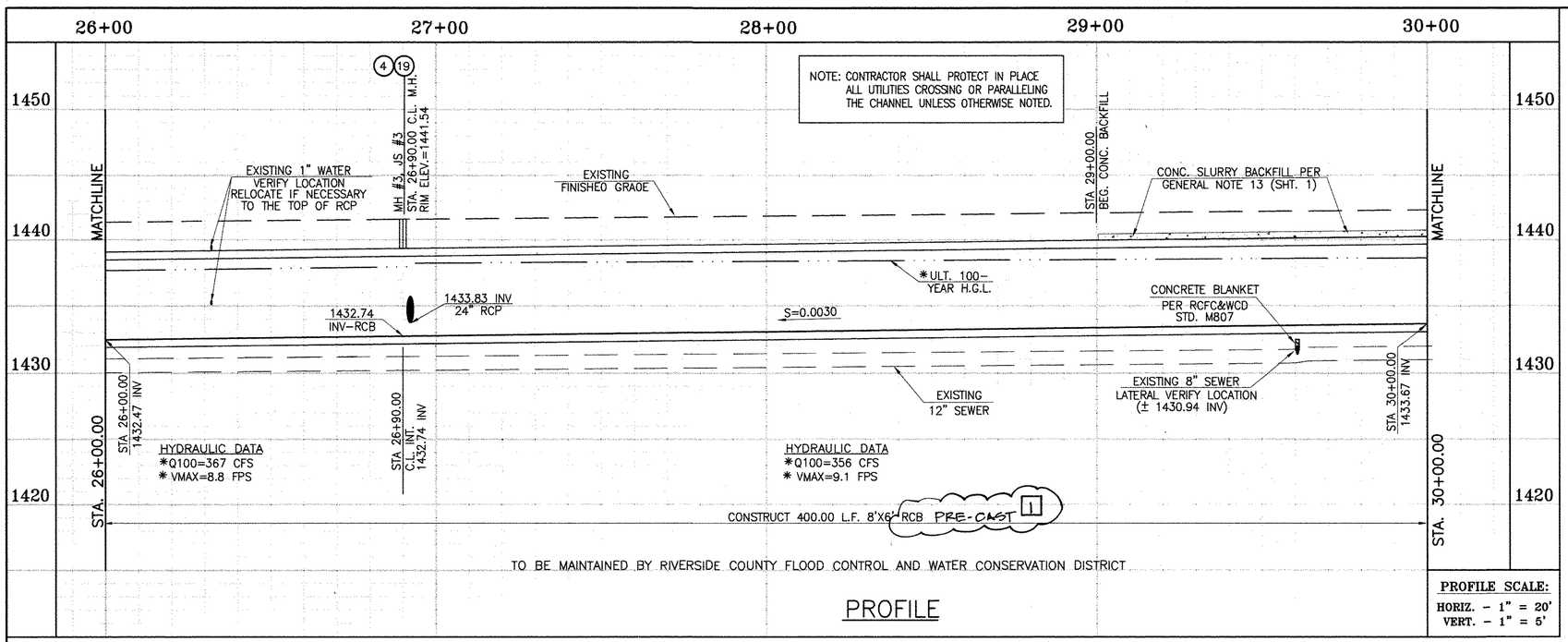

PROFILE

PROFILE SCALE:
HORIZ. - 1" = 20'
VERT. - 1" = 5'

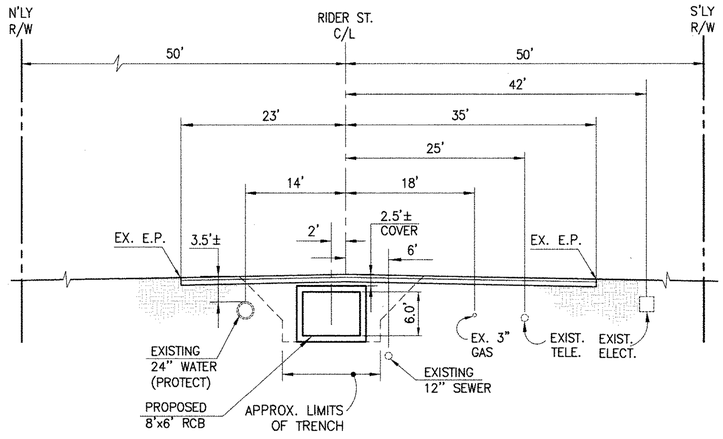

SECTION AT STA. 28+00.00

FROM STA 26+00 TO STA 29+62.72

0 5 10 20

SCALE:1"=10'

CAUTION:
PROPOSED WORK IS IN PROXIMITY OF HIGH PRESSURE GAS LINES

* THE ULTIMATE H.G.L. IS BASED ON THE ADOPTED MDP WATER SURFACE ELEVATION OF 1433 IN THE PERRIS VALLEY STORM CHANNEL (PVSC) AT RIDER STREET, AND ASSUMES THAT FULL CHANNEL IMPROVEMENTS HAVE BEEN CONSTRUCTED PER THE ADOPTED MDP. FOR ALL WATER SURFACE ELEVATIONS BETWEEN 1433 AND THE 100-YEAR FLOOD ELEVATION FOR PVSC (1437.5), LINE "A-B" WILL NOT HAVE CAPACITY FOR LOCAL 100-YEAR FLOWS.

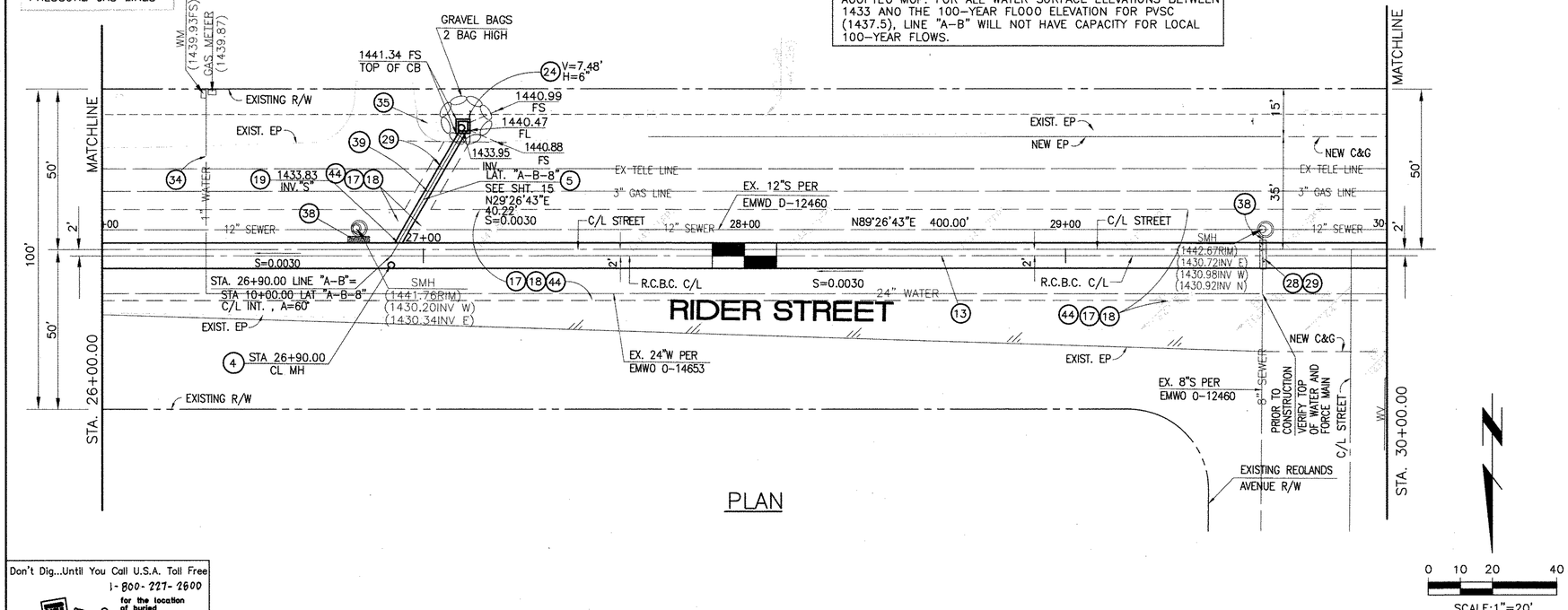

PLAN

0 10 20 40

SCALE:1"=20'

STORM DRAIN CONSTRUCTION NOTES:

(4) CONSTRUCT MANHOLE NO. 3 PER R.C.F.C.&W.C.D. STD DWG. MH253

(5) CONSTRUCT 24" R.C.P, 0-LOAO PER PLAN.

[1] (13) CONSTRUCT 8' X 6' ~~RCB PER CALTRANS STD PLAN NO. D80 OR APPROVED EQUAL~~ PRE-CAST RCB APWA STD PLAN 390-0 OR APPROVED EQUAL SEE JOINT SEALANT NOTE ON SHT. 1

(17) SAWCUT AND REMOVE EXISTING A.C. PAVEMENT.

(18) UTILITY TRENCH AND SURFACE REPAIR PER CITY STANDARD ON SHT. NO. 18, MODIFIED TO ACCOMMODATE SLURRY BACKFILL WHERE BOX COVER IS LESS THAN 2.0'.

(19) CONSTRUCT JUNCTION STRUCTURE NO.3 PER R.C.F.C.&W.C.D. STD. DWG. JS228.

(24) CONSTRUCT CONCRETE DROP INLET PER R.C.F.C.&W.C.D. STD DWG. CB110

(28) CONSTRUCT SEWER PROTECTION PER R.C.F.C.&W.C.D. STD. DWG. M807.

(29) PROTECT IN PLACE EXISTING UTILITIES.

(34) RELOCATE EXISTING WATER LINE PER E.M.W.O. PLANS.

(35) CONSTRUCT 4" THICK AC PAVEMENT OVER NATIVE.

(38) SLURRY BACKFILL BETWEEN RCB AND MANHOLE.

(39) RELOCATE EXISTING GAS LINE.

(44) SAWCUT, REMOVE AND REPLACE A.C. PAVEMENT SURFACE REPAIR PER CITY STD. ON SHEET 18. SEE SEPARATE PAVING PLANS.

Don't Dig...Until You Call U.S.A. Toll Free
1-800-227-2600
for the location of buried utility lines.
Don't disrupt vital services.
TWO WORKING DAYS BEFORE YOU DIG

BENCH MARK
COUNTY OF RIVERSIDE BENCHMARK NO. "H-31"
COUNTY OF RIVERSIDE BENCHMARK - 3 1/4" ALUMINUM DISK MARKED "H-31, LOCATED FLUSH AT THE SOUTH WEST CORNER OF BRIDGE ON TOP OF SIDEWALK NEAR FACE OF CURB LOCATED AT THE CROSSING OF PERRIS BLVD. AND RIV. CO. FLOOD CONTROL CHANNEL (PERRIS LATERAL 7), 43 FT. WEST OF CENTERLINE OF PERRIS BLVD. AND 4.5 FT. EAST OF CONCRETE BRIDGE BARRIER. (EDGE OF BRIDGE) MARKED R-103 D.N.S. IN TOP OF CONC. POST FLUSH W/ GROUND
ELEVATION = 1474.674' (NAVD 1929)

REF.	REVISIONS	ENGINEER APPR.	ENGINEER DATE	RCFC/ APPR.	RCFC/ DATE
[1]	CHANGED CAP. RCB TO PRE-CAST RCB APWA 390-0	H.LA		TG	2/27/14

DESIGNED BY: BN
DRAWN BY: ET
DATE DRAWN:

APPROVED BY: Thienes Engineering, Inc.
CIVIL ENGINEERING • LAND SURVEYING
14349 FIRESTONE BOULEVARD
LA MIRADA, CALIFORNIA 90638
PH.(714)521-4811 FAX(714)521-4173
HAIDOOK I. AGHAIAN Date: 11/18/14
HAIDOOK I. AGHAIAN RCE NO. 43293

REGISTERED PROFESSIONAL ENGINEER HAIDOOK I. AGHAIAN R.C.E. NO. 43293 Exp. 3-31-16 CIVIL STATE OF CALIFORNIA

KH 4/10/14

RIVERSIDE COUNTY FLOOD CONTROL AND WATER CONSERVATION DISTRICT
RECOMMENDED FOR APPROVAL BY: DATE: 1/20/2015
APPROVED BY: Mark M. Wills DATE: 1/20/2015

CITY OF PERRIS
APPROVED BY:
CITY ENGINEER DATE: 12-15-14
RECOMMENDED DATE:

CITY OF PERRIS
FILE NO. P8-1013

PERRIS VALLEY MDP
LINE "A-B"
FROM STA. 26+00 TO STA. 30+00

PROJECT NO. 4-0-00537
DRAWING NO. 4-1063
SHEET NO. 6 OF 18

Last Update: 11/18/14
O:\2700-2799\2702\2702P\2702SD06.dwg

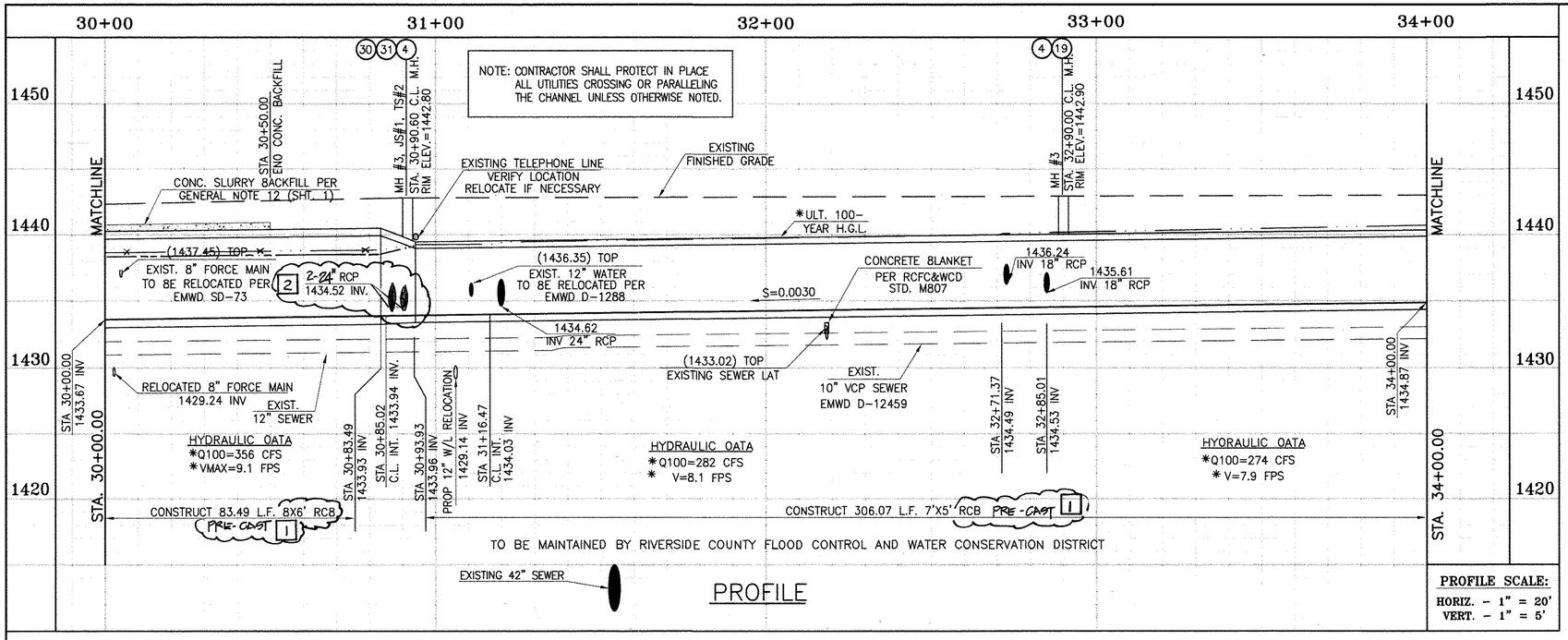

PROFILE

PROFILE SCALE:
HORIZ. - 1" = 20'
VERT. - 1" = 5'

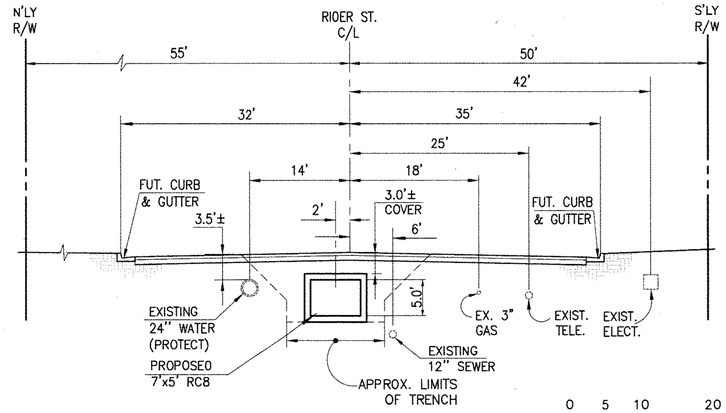

SECTION AT STA. 32+00.00
FROM STA 30+00 TO STA 30+63.55
FROM STA 31+97.19 TO STA 34+00

0 5 10 20
SCALE:1"=10'

STORM DRAIN CONSTRUCTION NOTES:

4. CONSTRUCT MANHOLE NO. 3 PER R.C.F.C.&W.C.D. STD DWG. MH253
5. CONSTRUCT 24" R.C.P, D-LOAD PER PLAN.
8. CONSTRUCT 42" R.C.P, D-LOAD PER PLAN.
11. CONSTRUCT 7' X 5' ~~RCB PER CALTRANS STD PLAN NO. D86~~ PRE-CAST RCB PER STD PLAN 3900 OR APPROVED EQUAL. ~~SEE JOINT SEALANT NOTE ON SHT. 1~~
13. CONSTRUCT 8' X 6' ~~RCB PER CALTRANS STD PLAN NO. D86~~ PRE-CAST RCB STD PLAN 3900 OR APPROVED EQUAL. ~~SEE JOINT SEALANT NOTE ON SHT. 1~~
15. CONSTRUCT CONCRETE BULKHEAD PER R.C.F.C.&W.C.D. STD DWG. M816.
16. CONSTRUCT CATCH BASIN NO.1 PER R.C.F.C.&W.C.D. STD. DWG. CB100
17. SAWCUT AND REMOVE EXISTING A.C. PAVEMENT.
18. UTILITY TRENCH AND SURFACE REPAIR PER CITY STANDARD ON SHT. NO. 18, MODIFIED TO ACCOMMODATE SLURRY BACKFILL WHERE BOX COVER IS LESS THAN 2.0'.
19. CONSTRUCT JUNCTION STRUCTURE NO.3 PER R.C.F.C.&W.C.O. STD. DWG. JS228.
20. CONSTRUCT LOCAL DEPRESSION NO. 2 CASE "B" PER R.C.F.C.&W.C.O. STD. DWG. LO201.
21. CONSTRUCT 18" R.C.P, D-LOAD PER PLAN.
22. CONSTRUCT CONCRETE COLLAR PER R.C.F.C.&W.C.D. STD DWG. M803.
28. CONSTRUCT SEWER PROTECTION PER R.C.F.C.&W.C.D. STD. DWG. M807.
29. PROTECT IN PLASE EXISTING UTILITIES.
30. CONSTRUCT JUNCTION STRUCTURE NO.1 PER R.C.F.C.&W.C.D. STD. DWG. JS226.
31. CONSTRUCT TRANSITION STRUCTURE NO.2 PER R.C.F.C.&W.C.O. STD. DWG. TS302.
33. RELOCATE EXISTING SEWER LATERALS PER E.M.W.D. PLANS.
34. RELOCATE EXISTING WATER LINE PER E.M.W.D. PLANS.
38. SLURRY BACKFILL BETWEEN RCB AND MANHOLE.
40. RELOCATE EXISTING ELECTRICAL LINE.
44. SAWCUT, REMOVE AND REPLACE A.C. PAVEMENT SURFACE REPAIR PER CITY STD. ON SHEET 18. SEE SEPARATE PAVING PLANS.

2 41 RELOCATE EXISTING TELEPHONE LINE.

CAUTION: PROPOSED WORK IS IN PROXIMITY OF HIGH PRESSURE GAS LINES

✳ THE ULTIMATE H.G.L. IS BASED ON THE ADOPTED MDP WATER SURFACE ELEVATION OF 1433 IN THE PERRIS VALLEY STORM CHANNEL (PVSC) AT RIDER STREET, AND ASSUMES THAT FULL CHANNEL IMPROVEMENTS HAVE BEEN CONSTRUCTED PER THE ADOPTED MDP. FOR ALL WATER SURFACE ELEVATIONS BETWEEN 1433 AND THE 100-YEAR FLOOD ELEVATION FOR PVSC (1437.5), LINE "A-8" WILL NOT HAVE CAPACITY FOR LOCAL 100-YEAR FLOWS.

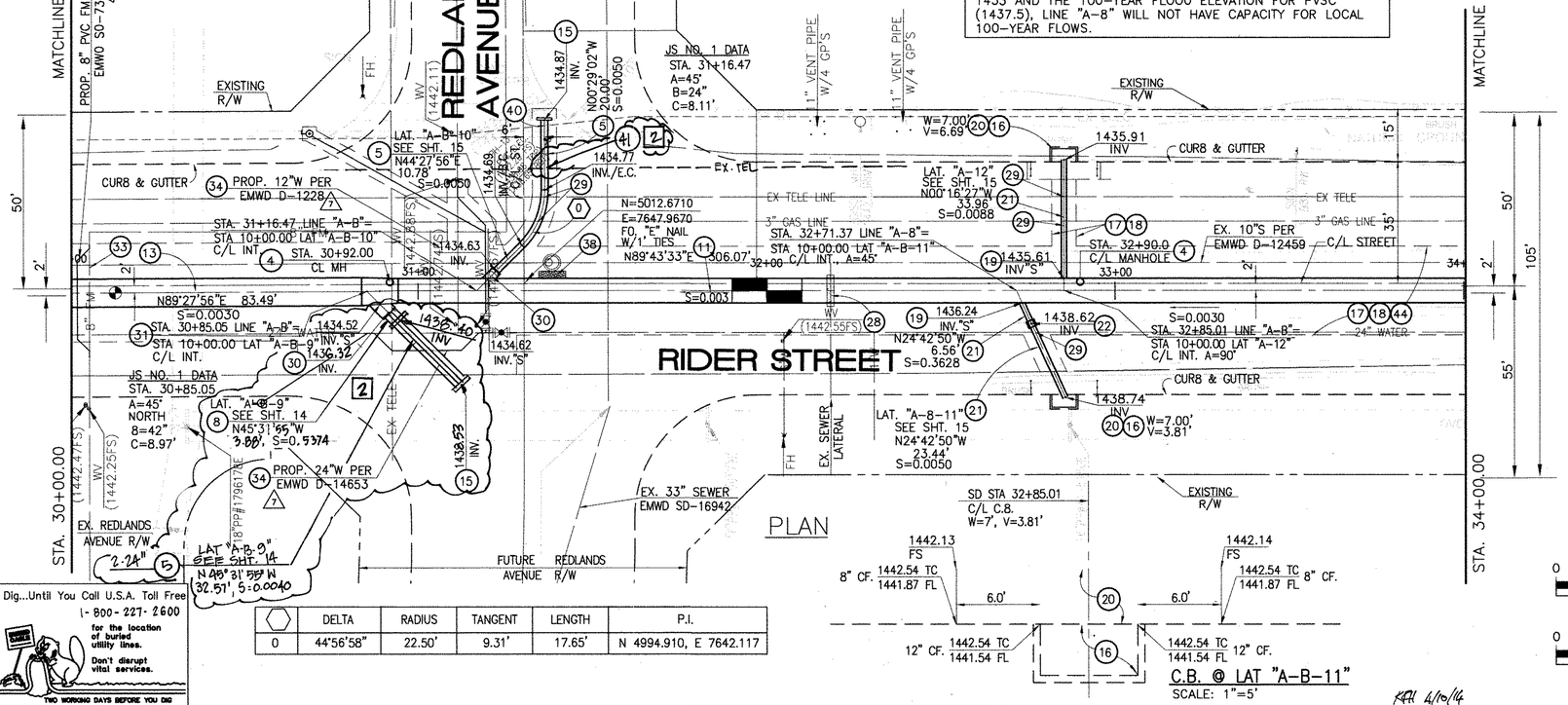

PLAN

	DELTA	RADIUS	TANGENT	LENGTH	P.I.
0	44°56'58"	22.50'	9.31'	17.65'	N 4994.910, E 7642.117

Don't Dig...Until You Call U.S.A. Toll Free 1-800-227-2600 for the location of buried utility lines. Don't disrupt vital services.
TWO WORKING DAYS BEFORE YOU DIG

BENCH MARK
COUNTY OF RIVERSIDE BENCHMARK NO. "M-31"
COUNTY OF RIVERSIDE BENCHMARK - 3 1/4" ALUMINUM DISK MARKED M-31, LOCATED FLUSH AT THE SOUTH WEST CORNER OF BRIDGE ON TOP OF SIDEWALK NEAR FACE OF CURB LOCATED AT THE CROSSING OF PERRIS BLVD. AND RIV. CO. FLOOD CONTROL CHANNEL (PERRIS LATERAL 7J), 43 FT. WEST OF CENTERLINE OF PERRIS BLVD. AND 4.5 FT. EAST OF CONCRETE BRIDGE BARRIER. (EDGE OF BRIDGE) MARKED R-102 U.W.E. IN TOP OF CONC. POST FLUSH W/ GROUND
ELEVATION = 1474.674' (NAVD 1929)

REF.	REVISIONS	ENGINEER APPR.	ENGINEER DATE	RCFC/ APPR.	RCFC/ DATE
2	CHANGED SLOPE TO 0.0015, ADDED MH, ADDED 10"S, CHANGED A2" LAT TO 12" LAT, ADDED RC UTILITIES, RELOCATE UTILITIES, REV. S.D.	H.I.A	2/6/16	2/25	2/23/16
1	CHANGED C.I.P. RCB TO PRE-CAST RCB PER A PWA STD	H.I.A	2/6/16	2/25	2/23/16

DESIGNED BY: BW
DRAWN BY: ET
DATE DRAWN:

APPROVED BY:
Thienes Engineering, Inc.
CIVIL ENGINEERING • LAND SURVEYING
14349 FIRESTONE BOULEVARD
LA MIRADA, CALIFORNIA 90638
PH.(714)521-4811 FAX(714)521-4173
Haiook Aghaian Date: 11/18/14
HAIOOK I. AGHAIAN RCE NO. 43293

REGISTERED PROFESSIONAL ENGINEER HAIOOK I. AGHAIAN R.C.E. NO. 43293 Exp. 3-31-16 CIVIL STATE OF CALIFORNIA

KFH 4/10/14

RIVERSIDE COUNTY FLOOD CONTROL AND WATER CONSERVATION DISTRICT
RECOMMENDED FOR APPROVAL BY: DATE: 1/29/2015
APPROVED BY: DATE: 1/20/2015

CITY OF PERRIS
APPROVED BY:
CITY ENGINEER DATE: 12-15-14
RECOMMENDED DATE:

CITY OF PERRIS FILE NO. P8-1013

PERRIS VALLEY MDP LINE "A-B"

FROM STA. 30+00 TO STA. 34+00

PROJECT NO. 4-0-00537
DRAWING NO. 4-1063
SHEET NO. 7 OF 18

Last Update: 11/18/14
O:\2700-2799\2702\2702P\2702SD07.dwg

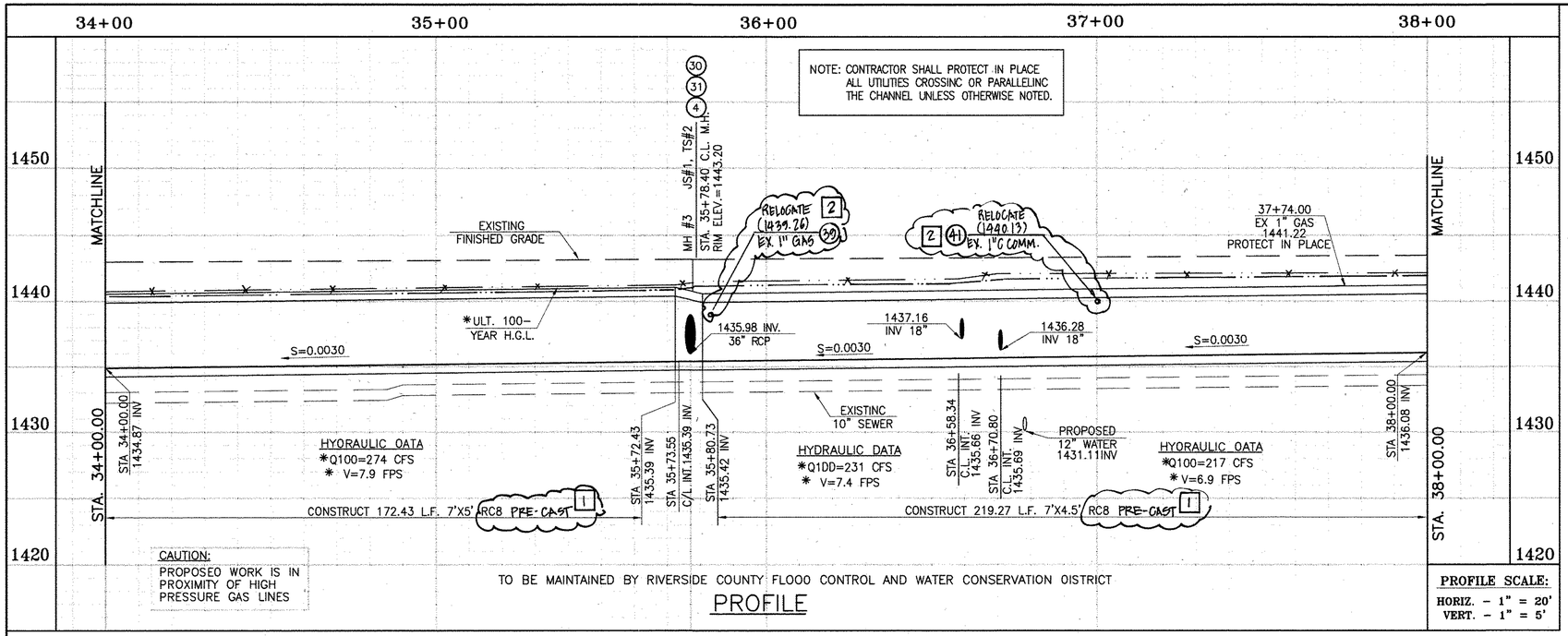

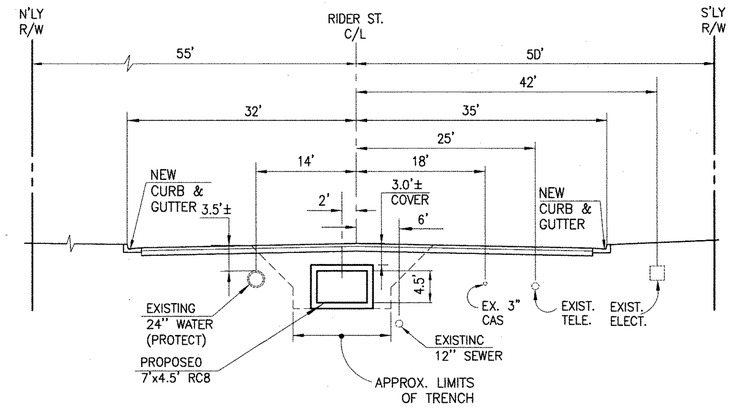

SECTION AT STA. 36+00.00
FROM STA 34+00 TO STA 35+62.28
FROM STA 36+52.28 TO STA 38+00

0 5 10 20
SCALE:1"=10'

STORM DRAIN CONSTRUCTION NOTES:

(4) CONSTRUCT MANHOLE NO. 3 PER R.C.F.C.&W.C.D. STD DWC. MH253
(7) CONSTRUCT 36" R.C.P, D-LOAD PER PLAN.
(1) (10) CONSTRUCT 7' x 4.5' ~~PER CALTRANS STD PLAN D86~~ PRE-CAST RCB APWA STD PLAN 390-0 OR APPROVED EQUAL. SEE JOINT SEALANT NOTE ON SHT. 1.
(1) (11) CONSTRUCT 7' X 5' ~~RCB PER CALRANS STD PLAN D86~~ PRE-CAST RCB APWA STD PLAN 390-0 OR APPROVED EQUAL. SEE JOINT SEALANT ON SHT. 1.
(15) CONSTRUCT CONCRETE BULKHEAD PER R.C.F.C.&W.C.D. STD DWC. M816.
(16) CONSTRUCT CATCH BASIN NO.1 PER R.C.F.C.&W.C.D. STD. DWC. C8100
(17) SAWCUT AND REMOVE EXISTINC A.C. PAVEMENT.
(18) UTILITY TRENCH AND SURFACE REPAIR PER CITY STANDARD ON SHT. NO. 18, MOOIFIED TO ACCOMMOOATE SLURRY BACKFILL WHERE 8OX COVER IS LESS THAN 2.0'.
(19) CONSTRUCT JUNCTION STRUCTURE NO. 3 PER R.C.F.C.&W.C.D. STD. DWC. JS228.
(20) CONSTRUCT LOCAL DEPRESSION #2 CASE "B" PER R.C.F.C.&W.C.D. STD. DWC. LD201.
(21) CONSTRUCT 18" R.C.P, D-LOAD PER PLAN.
(22) CONSTRUCT CONCRETE COLLAR PER R.C.F.C.&W.C.D. STD DWC. M803.
(29) PROTECT IN PLACE EXISTING UTILITIES.
(30) CONSTRUCT JUNCTION STRUCTURE NO. 1 PER R.C.F.C.&W.C.D. STD. DWC. JS226.
(31) CONSTRUCT TRANSITION STRUCTURE NO. 2 PER R.C.F.C.&W.C.D. STD. DWC. TS302.
(34) RELOCATE EXISTING WATER LINE PER E.M.W.D. PLANS.
(38) SLURRY BACKFILL BETWEEN RC8 AND MANHOLE.
(39) RELOCATE EXISTINC CAS LINE.
(40) RELOCATE EXISTINC ELECTRICAL LINE.
(41) RELOCATE EXISTINC TELEPHONE LINE.
(42) INSTALL NEW SEWER LATERAL PER E.M.W.D. PLANS.
(44) SAWCUT, REMOVE AND REPLACE A.C. PAVEMENT SURFACE REPAIR PER CITY STD. ON SHEET 18. SEE SEPARATE PAVINC PLANS.

	DELTA	RADIUS	TANCENT	LENCTH	P.I.
A	45°00'00"	45.00'	18.64'	35.34'	N 4986.063, E 7178.271

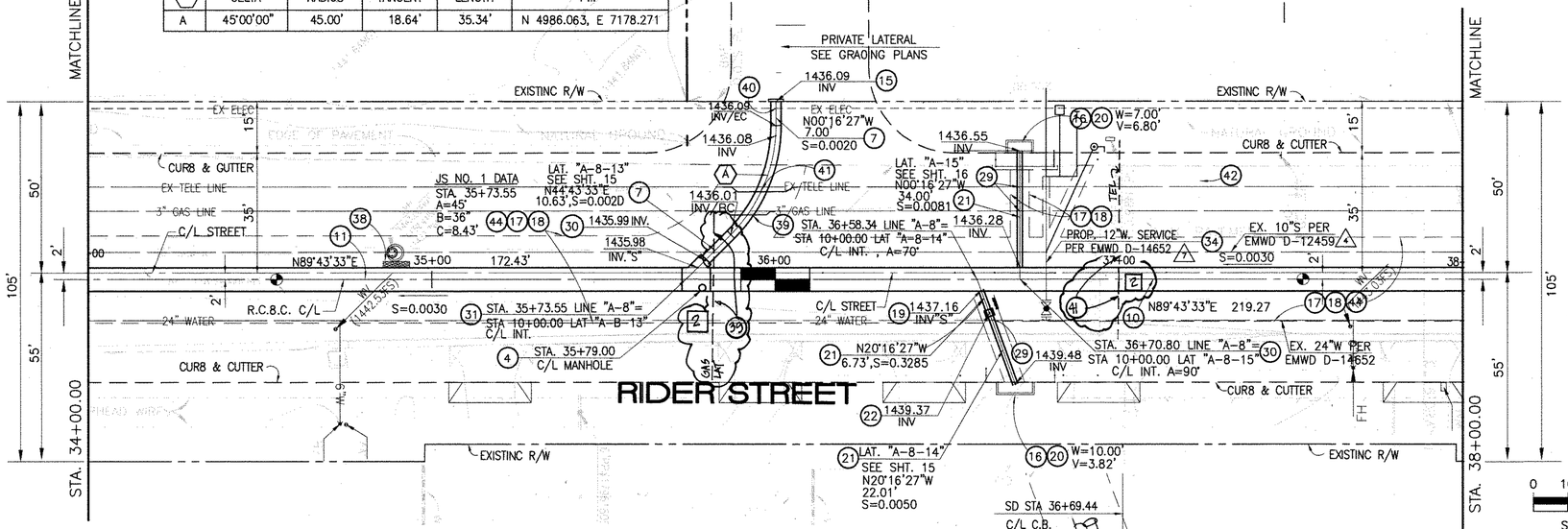

0 10 20 40
SCALE:1"=20'

0 2.5 5 10
SCALE:1"=5'

C.B. @ LAT "A-B-14"
SCALE: 1"=5'

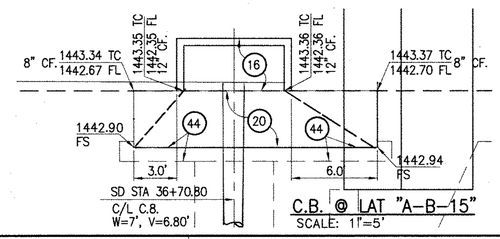

C.B. @ LAT "A-B-15"
SCALE: 1"=5'

✳ THE ULTIMATE H.G.L. IS BASED ON THE ADOPTED MDP WATER SURFACE ELEVATION OF 1433 IN THE PERRIS VALLEY STORM CHANNEL (PVSC) AT RIDER STREET, AND ASSUMES THAT FULL CHANNEL IMPROVEMENTS HAVE BEEN CONSTRUCTED PER THE ADOPTED MDP. FOR ALL WATER SURFACE ELEVATIONS BETWEEN 1433 AND THE 100-YEAR FLOOD ELEVATION FOR PVSC (1437.5), LINE "A-B" WILL NOT HAVE CAPACITY FOR LOCAL 100-YEAR FLOWS.

Don't Dig...Until You Call U.S.A. Toll Free 1-800-227-2600 for the location of buried utility lines. Don't disrupt vital services.
TWO WORKING DAYS BEFORE YOU DIG

BENCH MARK
COUNTY OF RIVERSIDE BENCHMARK NO. "24-31"
COUNTY OF RIVERSIDE BENCHMARK - 3 1/4" ALUMINUM DISK MARKED M-31, LOCATED FLUSH AT THE SOUTH WEST CORNER OF BRIDGE ON TOP OF SIDEWALK NEAR FACE OF CURB LOCATED AT THE CROSSING OF PERRIS BLVD. AND RIV. CO. FLOOD CONTROL CHANNEL (PERRIS LATERAL "A"). 43 FT. WEST OF CENTERLINE OF PERRIS BLVD. AND 4.5 FT. EAST OF CONCRETE BRIDGE BARRIER. (EDGE OF BRIDGE) MARKED R-102 D.M.R. IN TOP OF CONC. POST FLUSH W/ GROUND
ELEVATION = 1476.874' (NAVD 1929)

REF.	DESCRIPTION	ENGINEER APPR.	RCFC/ DATE	RCFC/ APPR.	RCFC/ DATE
2	CHANGED SLOPE TO 0.00%, ADDED MH, ADDED 10"S, CHANGED 42" LAT TO 24" LAT., ADDED EX. UTILITIES, RELOCATE UTILITIES, REV. SD.	H.I.A	2/6/14		2/13/14
1	CHANGED C.I.P. RCB TO PRECAST RCB APWA 390-0 H.I.A		2/6/14		2/13/14

DESIGNED BY: BW
DRAWN BY: ET
DATE DRAWN:

APPROVED BY:
Thienes Engineering, Inc.
CIVIL ENGINEERING • LAND SURVEYING
14349 FIRESTONE BOULEVARD
LA MIRADA, CALIFORNIA 90638
PH.(714)521-4811 FAX(714)521-4173
HAIDOOK I. AGHAIAN Date: 11/18/14 RCE NO. 43293
REGISTERED PROFESSIONAL ENGINEER HAIDOOK L AGHAIAN R.C.E. NO. 43293 Exp. 3-31-16 CIVIL STATE OF CALIFORNIA

RIVERSIDE COUNTY FLOOD CONTROL AND WATER CONSERVATION DISTRICT
RECOMMENDED FOR APPROVAL BY: DATE: 11/20/2015
APPROVED BY: Mark H. Wills DATE: 11/20/2015

CITY OF PERRIS
APPROVED BY:
CITY ENGINEER DATE: 12-15-14
RECOMMENDED DATE:

PERRIS VALLEY MDP LINE "A-B"

FROM STA. 34+00 TO STA. 38+00

CITY OF PERRIS FILE NO. P8-1013
PROJECT NO. 4-0-00537
DRAWING NO. 4-1063
SHEET NO. 8 OF 18

Last Update: 11/18/14
O:\2700-2799\2702\2702F\2702SD08.dwg

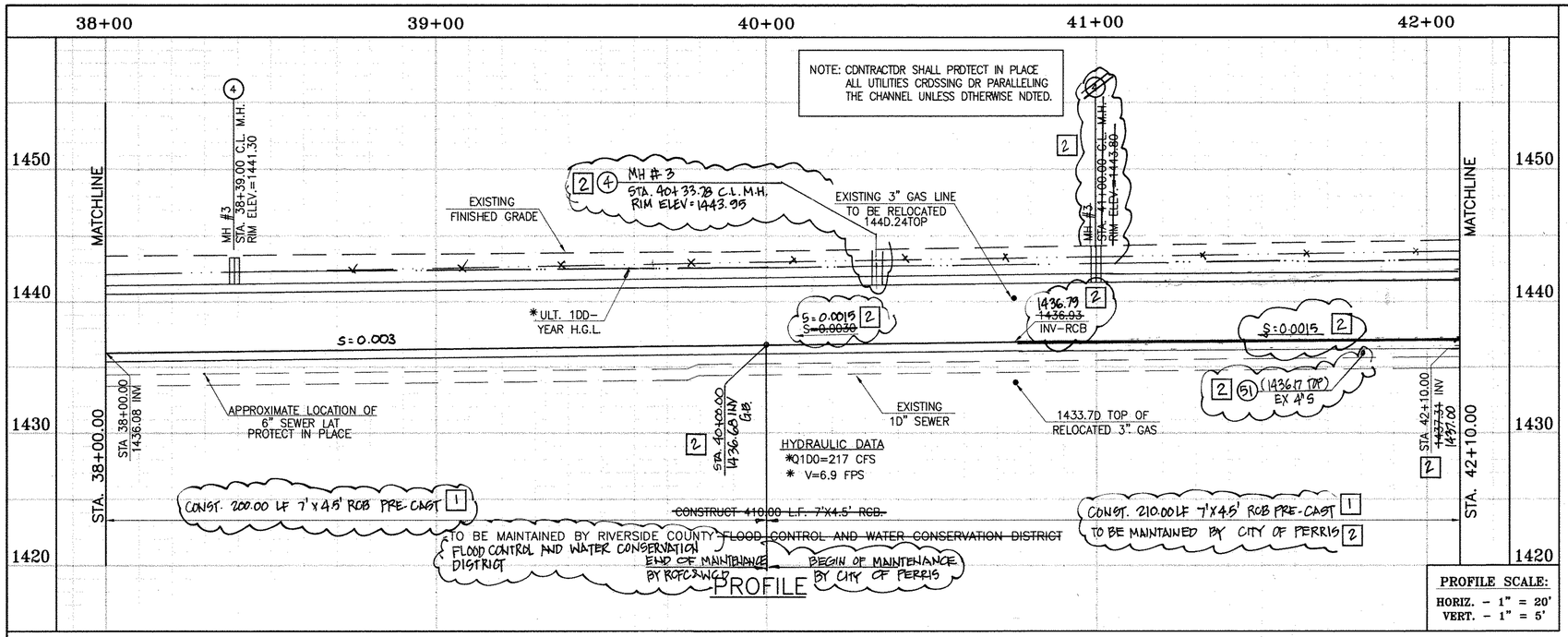

PROFILE SCALE:
HORIZ. – 1" = 20'
VERT. – 1" = 5'

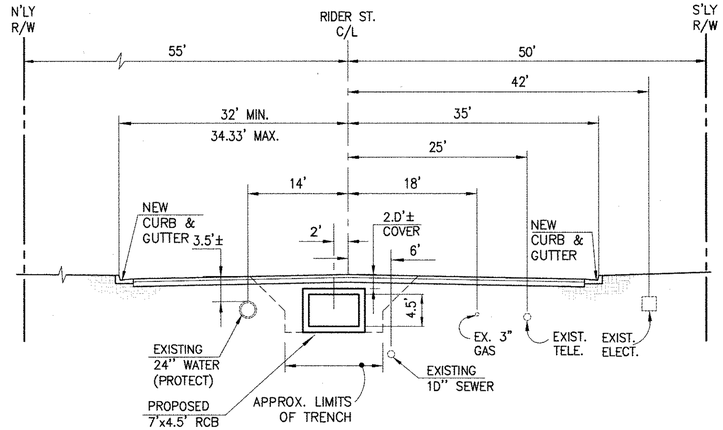

SECTION AT STA. 40+00.00
FROM STA 38+00 TO STA 41+14.24

0 5 10 20
SCALE:1"=10'

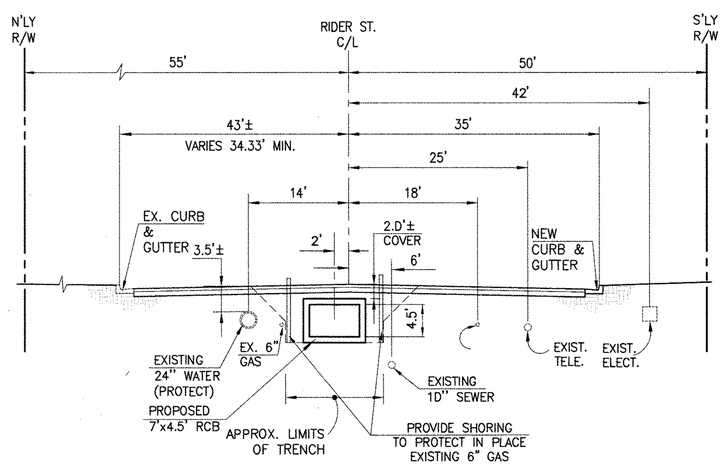

SECTION AT STA. 41+50.00
FROM STA 41+14.24 TO STA 42+10

0 5 10 20
SCALE:1"=10'

CAUTION:
PROPOSED WORK IS IN PROXIMITY OF HIGH PRESSURE GAS LINES

✳ THE ULTIMATE H.G.L. IS BASED ON THE ADOPTED MDP WATER SURFACE ELEVATION OF 1433 IN THE PERRIS VALLEY STORM CHANNEL (PVSC) AT RIDER STREET, AND ASSUMES THAT FULL CHANNEL IMPROVEMENTS HAVE BEEN CONSTRUCTED PER THE ADOPTED MDP. FOR ALL WATER SURFACE ELEVATIONS BETWEEN 1433 AND THE 100-YEAR FLOOD ELEVATION FOR PVSC (1437.5), LINE "A-B" WILL NOT HAVE CAPACITY FOR LOCAL 100-YEAR FLOWS.

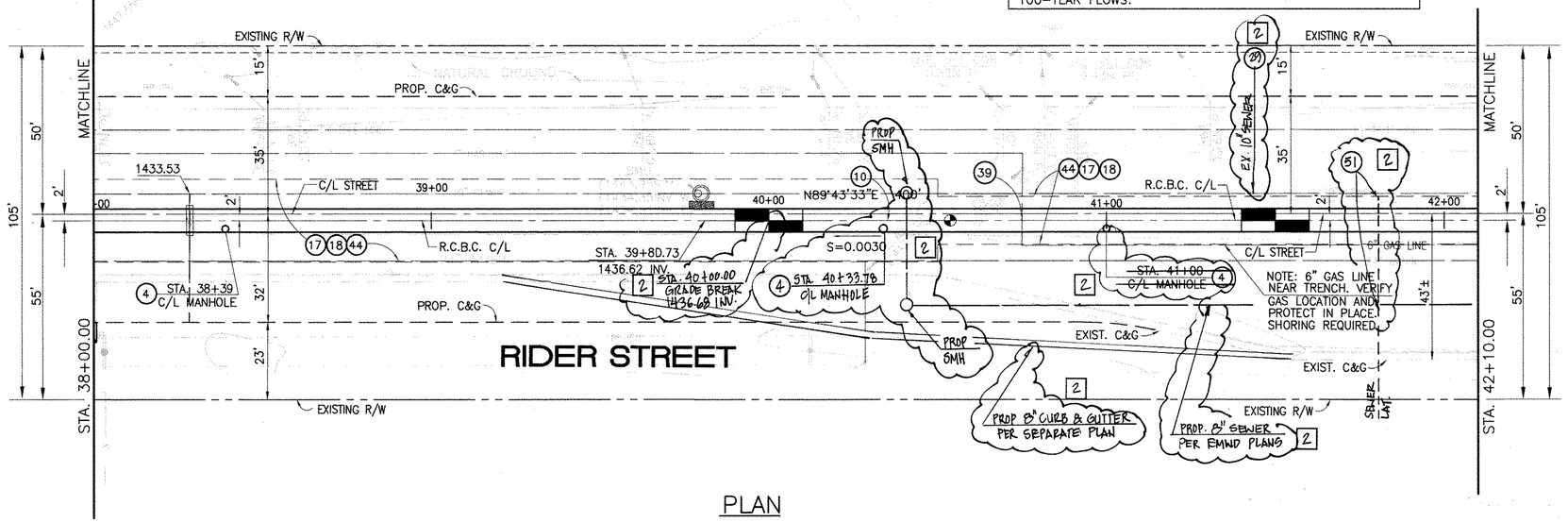

PLAN

0 10 20 40
SCALE:1"=20'

STORM DRAIN CONSTRUCTION NOTES:

(4) CONSTRUCT MANHOLE #3 PER R.C.F.C.&W.C.D. STD DWG. MH253.

1 (10) CONSTRUCT 7' X 4.5' ~~RCB PER CALTRANS STD PLAN D88~~ PRE-CAST RCB APWA STD PLAN 330-0 OR APPROVED EQUAL. SEE JOINT SEALANT NOTE ON SHT. 1.

(17) SAWCUT AND REMOVE EXISTING A.C. PAVEMENT.

(18) UTILITY TRENCH AND SURFACE REPAIR PER CITY STANDARD ON SHT. NO. 18, MODIFIED TO ACCOMMODATE SLURRY BACKFILL WHERE BOX COVER IS LESS THAN 2.D'.

(28) CONSTRUCT SEWER PROTECTION PER R.C.F.C.&W.C.D. STD. DWG. M8D7.

(44) SAWCUT, REMOVE AND REPLACE A.C. PAVEMENT SURFACE REPAIR PER CITY STD. ON SHEET 18. SEE SEPARATE PAVING PLANS.

(20) PROTECT IN PLACE EXISTING UTILITIES.

2 (51) REMOVE EXISTING SEWER LATERALS PER EMWD PLANS

Don't Dig...Until You Call U.S.A. Toll Free 1-800-227-2600 for the location of buried utility lines. Don't disrupt vital services.
TWO WORKING DAYS BEFORE YOU DIG

BENCH MARK
COUNTY OF RIVERSIDE BENCHMARK NO. "M-31"
COUNTY OF RIVERSIDE BENCHMARK – 3 1/4" ALUMINUM DISK MARKED M-31, LOCATED FLUSH AT THE SOUTH WEST CORNER OF BRIDGE ON TOP OF SIDEWALK NEAR FACE OF CURB LOCATED AT THE CROSSING OF PERRIS BLVD. AND RIV. CO. FLOOD CONTROL CHANNEL (PERRIS LATERAL 7J). 63 FT. WEST OF CENTERLINE OF PERRIS BLVD. AND 4.5 FT. EAST OF CONCRETE BRIDGE BARRIER. (EDGE OF BRIDGE) MARKED R-102 D.W.R. IN TOP OF CONC. POST FLUSH W/ GROUND
ELEVATION = 1474.674' (NAVD 1929)

REF.	DESCRIPTION	ENGINEER APPR.	ENGINEER DATE	RCFC/ APPR.	RCFC/ DATE
2	CHANGED SLOPE TO 0.0018, ADDED MH, MODIFIED VIEW D"5, CHANGED 42"LAT TO 24"LAT, ADDED EX. UTILITIES, RELOCATE UTILITIES, REV. S.D.	H.I.A.	2/3/16		2/23/16
1	CHANGED C.I.P. RCB TO PRE-CAST RCB APWA 3900	H.I.A.	2/3/16		2/23/16

DESIGNED BY: BW
DRAWN BY: ET
DATE DRAWN:

APPROVED BY: Thienes Engineering, Inc.
CIVIL ENGINEERING • LAND SURVEYING
14349 FIRESTONE BOULEVARD
LA MIRADA, CALIFORNIA 90638
PH.(714)521-4811 FAX(714)521-4173
Haidook Aghaian Date: 11/18/14
HAIDOOK I. AGHAIAN RCE NO. 43293

REGISTERED PROFESSIONAL ENGINEER HAIDOOK L. AGHAIAN R.C.E. NO. 43293 Exp. 3-31-16 CIVIL STATE OF CALIFORNIA

KEH 4/10/14

RIVERSIDE COUNTY FLOOD CONTROL AND WATER CONSERVATION DISTRICT
RECOMMENDED FOR APPROVAL BY: DATE: 1/14/2015
APPROVED BY: DATE: 1/20/2015

CITY OF PERRIS
APPROVED BY:
CITY ENGINEER DATE: 12-15-14
RECOMMENDED DATE:

CITY OF PERRIS
FILE NO. P8-1013

PERRIS VALLEY MDP LINE "A-B"

FROM STA. 38+00 TO STA. 42+00

PROJECT NO. 4-0-00537
DRAWING NO. 4-1063
SHEET NO. 9 OF 18

Last Update: 11/18/14
O:\2700-2799\2702\2702F\2702SD09.dwg

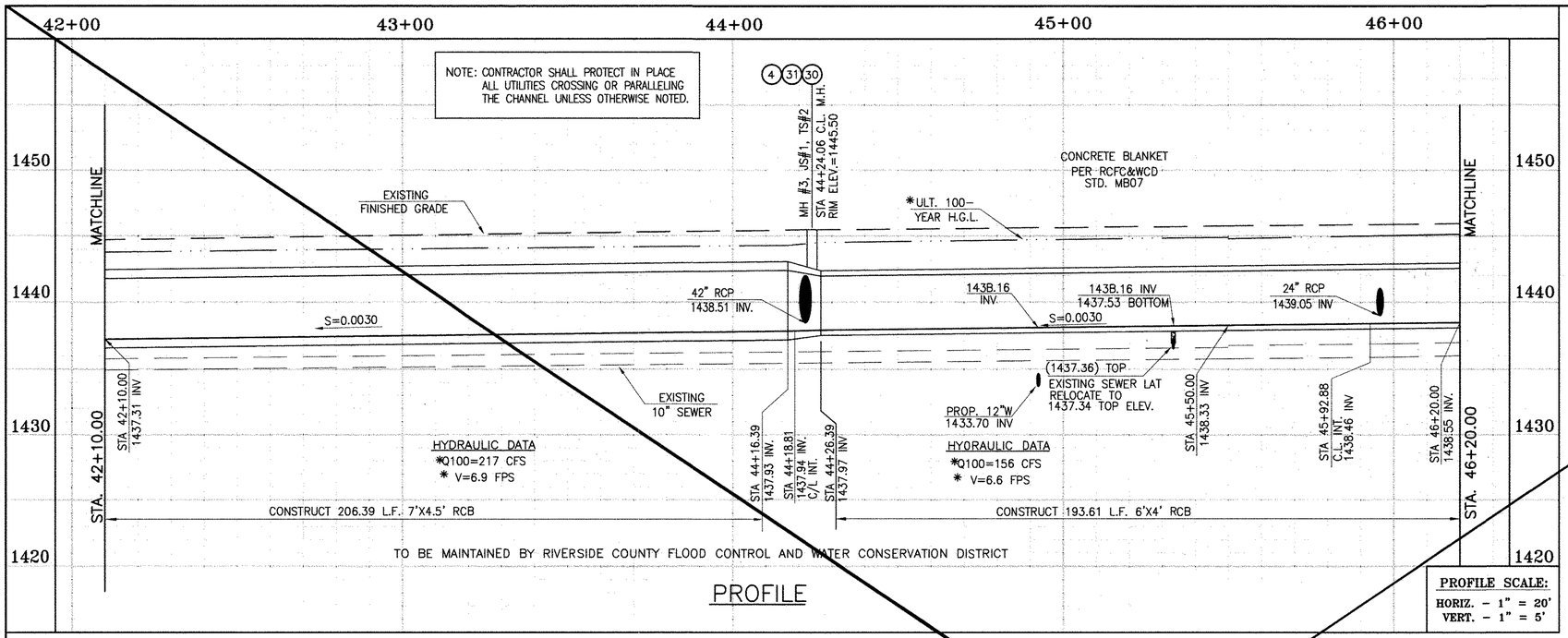

PROFILE

PROFILE SCALE:
HORIZ. - 1" = 20'
VERT. - 1" = 5'

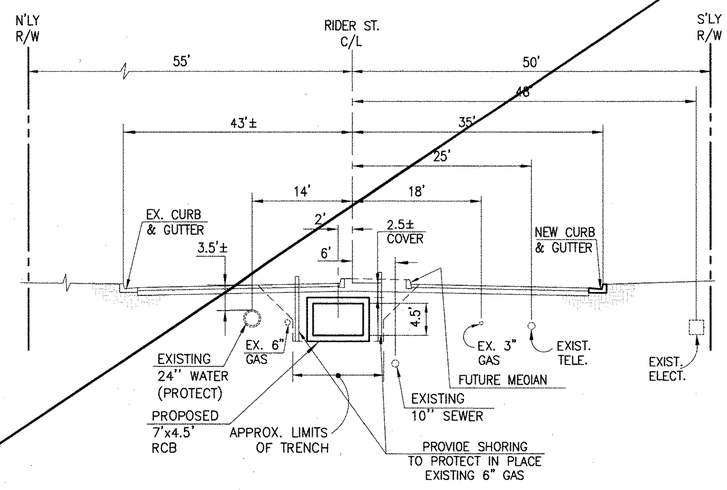

SECTION AT STA. 43+00.00

FROM STA 42+10.00 TO STA 45+77.27

0 5 10 20

SCALE:1"=10'

CAUTION:
PROPOSEO WORK IS IN PROXIMITY OF HIGH PRESSURE GAS LINES

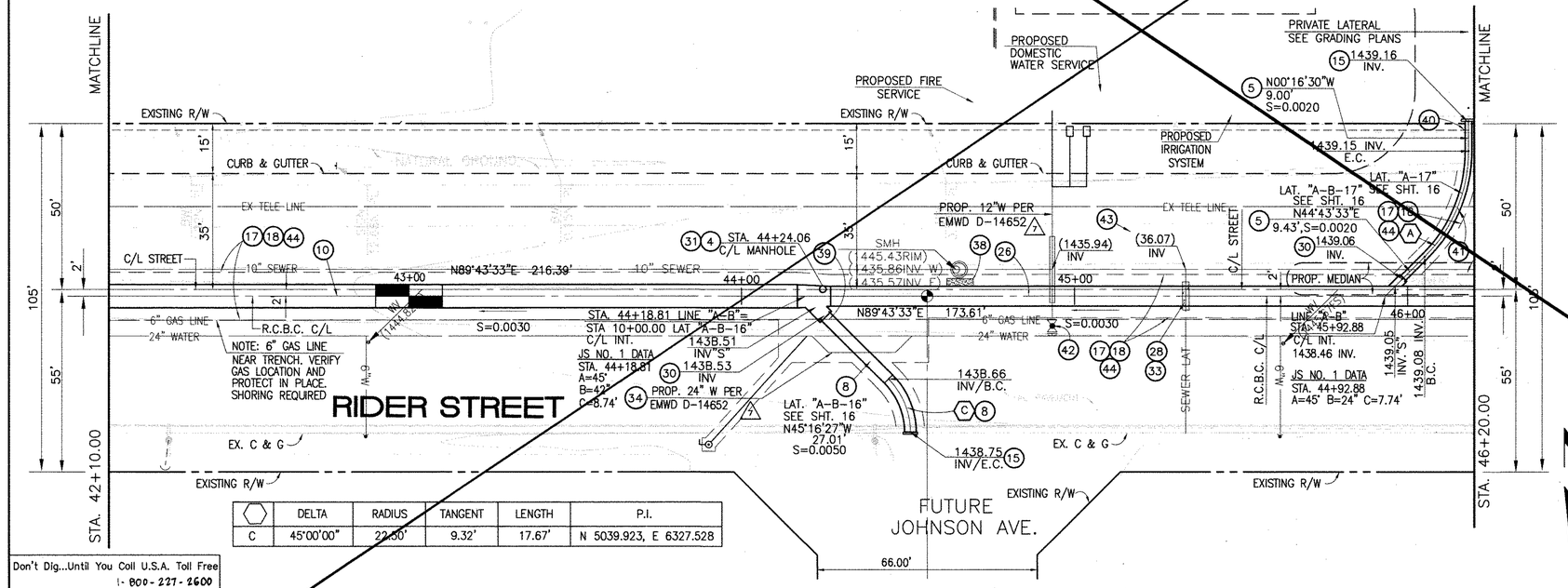

	DELTA	RADIUS	TANGENT	LENGTH	P.I.
C	45°00'00"	22.50'	9.32'	17.67'	N 5039.923, E 6327.528

PLAN

0 10 20 40

SCALE:1"=20'

✳ THE ULTIMATE H.G.L. IS BASED ON THE ADOPTED MDP WATER SURFACE ELEVATION OF 1433 IN THE PERRIS VALLEY STORM CHANNEL (PVSC) AT RIDER STREET, ANO ASSUMES THAT FULL CHANNEL IMPROVEMENTS HAVE BEEN CONSTRUCTED PER THE AOOPTED MOP. FOR ALL WATER SURFACE ELEVATIONS BETWEEN 1433 AND THE 100-YEAR FLOOD ELEVATION FOR PVSC (1437.5), LINE "A-B" WILL NOT HAVE CAPACITY FOR LOCAL 100-YEAR FLOWS.

STORM DRAIN CONSTRUCTION NOTES:

(4) CONSTRUCT MANHOLE NO. 3 PER R.C.F.C.&W.C.O. STO OWG. MH253
(5) CONSTRUCT 24" R.C.P, D-LOAD PER PLAN.
(7) CONSTRUCT 36" R.C.P, D-LOAO PER PLAN.
(B) CONSTRUCT 42" R.C.P, D-LOAD PER PLAN.
(10) CONSTRUCT 7' x 4.5' RCB PER CALTRANS STO PLAN NO. DBO OR APPROVED EQUAL.
(15) CONSTRUCT CONCRETE BULKHEAD PER R.C.F.C.&W.C.O. STO OWG. M816.
(17) SAWCUT AND REMOVE EXISTING A.C. PAVEMENT.
(1B) UTILITY TRENCH AND SURFACE REPAIR PER CITY STANDARD ON SHT. NO. 1B, MODIFIED TO ACCOMMODATE SLURRY BACKFILL WHERE BOX COVER IS LESS THAN 2.0'.
(26) CONSTRUCT 6' X 4' RCB PER CALTRANS STD PLAN NO. DBO. OR APPROVED EQUAL.
(28) CONSTRUCT SEWER PROTECTION PER R.C.F.C.&W.C.O. STO. OWG. M807.
(30) CONSTRUCT JUNCTION STRUCTURE NO.1 PER R.C.F.C.&W.C.D. STD. DWG. JS226.
(31) CONSTRUCT TRANSITION STRUCTURE NO. 2 PER R.C.F.C.&W.C.D. STD. DWG. TS302.
(33) RELOCATE EXISTING 6" SEWER LAT. PER E.M.W.O. PLANES
(34) RELOCATE EXISTING WATER LINE PER E.M.W.D. PLANS.
(3B) SLURRY BACKFILL BETWEEN RCB AND MANHOLE.
(39) RELOCATE EXISTING GAS LINE.
(40) RELOCATE EXISTING ELECTRICAL LINE.
(41) RELOCATE EXISTING TELEPHONE LINE.
(42) CONSTRUCT PROPOSEO 12" WATER MAIN, PER E.M.W.D. PLANS.
(43) CONSTRUCT PROPOSED 6" SEWER LATERAL, PER E.M.W.D. PLANS.
(44) SAWCUT, REMOVE AND REPLACE A.C. PAVEMENT SURFACE REPAIR PER CITY STO. ON SHEET 18. SEE SEPARTE PAVING PLANS.

Don't Dig...Until You Call U.S.A. Toll Free
1-800-227-2600
for the location of buried utility lines.
Don't disrupt vital services.
TWO WORKING DAYS BEFORE YOU DIG

BENCH MARK
COUNTY OF RIVERSIDE BENCHMARK NO. "M-31"
COUNTY OF RIVERSIDE BENCHMARK - 3 1/4" ALUMINUM DISK MARKED M-31, LOCATED FLUSH AT THE SOUTH WEST CORNER OF BRIDGE ON TOP OF SIDEWALK NEAR FACE OF CURB LOCATED AT THE CROSSING OF PERRIS BLVD. AND RIV. CO. FLOOD CONTROL CHANNEL (PERRIS LATERAL "A"), 43 FT. WEST OF CENTERLINE OF PERRIS BLVD. AND 4.5 FT. EAST OF CONCRETE BRIDGE BARRIER. (EDGE OF BRIDGE) MARKED B.M.D. D.W.R. IN TOP OF CONC. POST FLUSH W/ GROUND.
ELEVATION = 1474.674' (NAVD 1929)

REF.	REVISIONS	ENGINEER APPR.	ENGINEER DATE	RCFC/ APPR.	RCFC/ DATE
	SHEET SUPERSEDED BY 10A	#14	2/23/16	06	2/23/16

DESIGNED BY: BW
DRAWN BY: ET
DATE DRAWN:

APPROVED BY:
Thienes Engineering, Inc.
CIVIL ENGINEERING • LAND SURVEYING
14349 FIRESTONE BOULEVARD
LA MIRADA, CALIFORNIA 90638
PH.(714)521-4811 FAX(714)521-4173
Haidook I. Aghaian Date: 11/18/14
HAIDOOK I. AGHAIAN RCE NO. 43293

REGISTERED PROFESSIONAL ENGINEER HAIDOOK I. AGHAIAN R.C.E. NO. 43293 Exp. 3-31-16 CIVIL STATE OF CALIFORNIA

RIVERSIDE COUNTY FLOOD CONTROL AND WATER CONSERVATION DISTRICT
RECOMMENDED FOR APPROVAL: DATE: 1/20/2015
APPROVED BY: DATE: 1/20/2015

CITY OF PERRIS
APPROVED BY:
CITY ENGINEER DATE: 12-15-14
RECOMMENDED DATE:

CITY OF PERRIS
FILE NO. P8-1013

PERRIS VALLEY MDP LINE "A-B"

FROM STA. 42+10 TO STA. 46+20

PROJECT NO. 4-0-00537
DRAWING NO. 4-1063
SHEET NO. 10 OF 18

Last Update: 11/18/14
O:\2700-2799\2702\2702F\2702S010.dwg

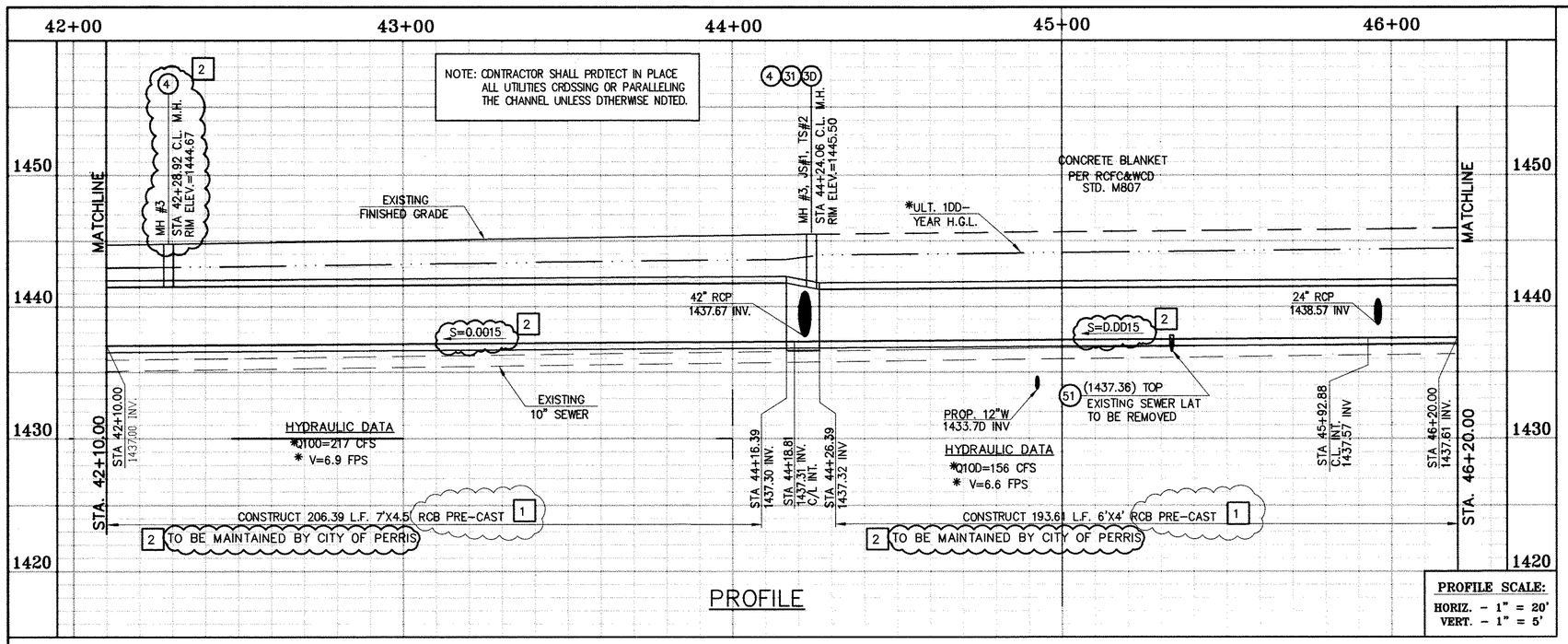

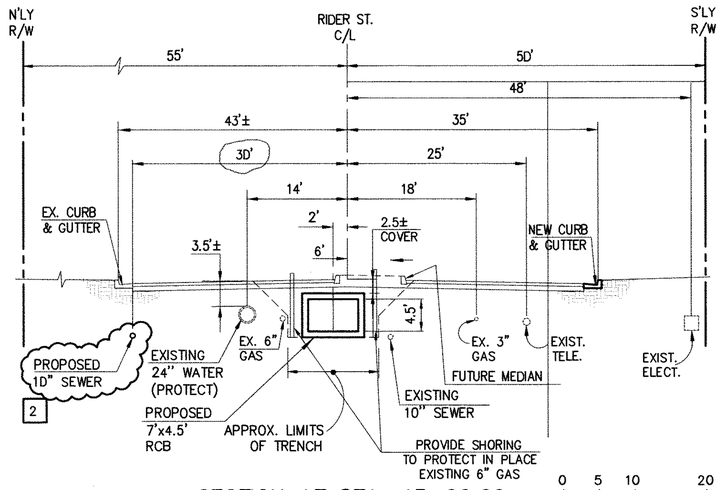

* THE ULTIMATE H.G.L. IS BASED ON THE ADOPTED MDP WATER SURFACE ELEVATION OF 1433 IN THE PERRIS VALLEY STORM CHANNEL (PVSC) AT RIDER STREET, AND ASSUMES THAT FULL CHANNEL IMPROVEMENTS HAVE BEEN CONSTRUCTED PER THE ADOPTED MDP. FOR ALL WATER SURFACE ELEVATIONS BETWEEN 1433 AND THE 100-YEAR FLOOD ELEVATION FOR PVSC (1437.5), LINE "A-B" WILL NOT HAVE CAPACITY FOR LOCAL 100-YEAR FLOWS.

CAUTION: PROPOSED WORK IS IN PROXIMITY OF HIGH PRESSURE GAS LINES

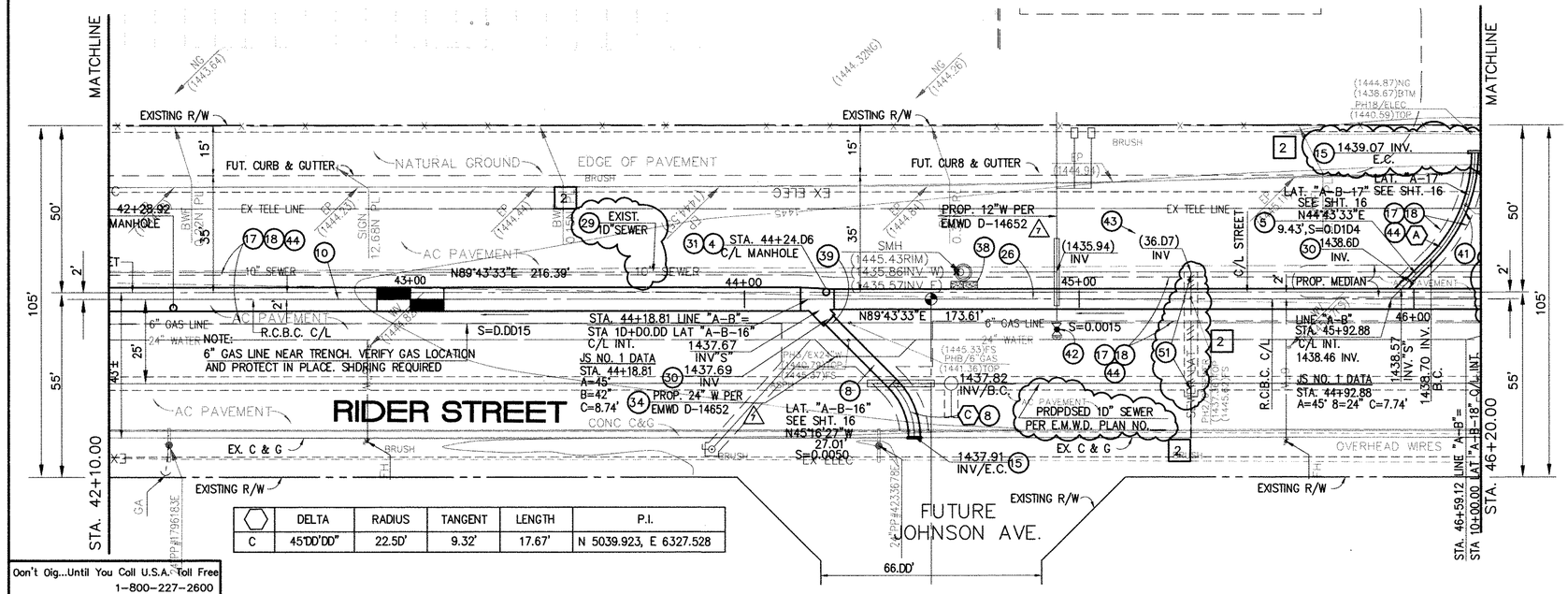

	DELTA	RADIUS	TANGENT	LENGTH	P.I.
C	45°DD'DD"	22.5D'	9.32'	17.67'	N 5039.923, E 6327.528

PLAN

SCALE: 1"=20'

STORM DRAIN CONSTRUCTION NOTES:

(4) CONSTRUCT MANHOLE NO. 3 PER R.C.F.C.&W.C.D. STD DWG. MH253
(5) CONSTRUCT 24" R.C.P, D-LOAD PER PLAN.
(7) CONSTRUCT 36" R.C.P, D-LOAD PER PLAN.
(B) CONSTRUCT 42" R.C.P, D-LOAD PER PLAN.
(1)(10) CONSTRUCT 7' X 4.5' PRE-CAST RCB APWA STD PLAN 39D-D OR APPROVED EQUAL. SEE JOINT SEALANT NOTE ON SHEET #1.
(15) CONSTRUCT CONCRETE BULKHEAD PER R.C.F.C.&W.C.D. STD DWG. M816.
(17) SAWCUT AND REMOVE EXISTING A.C. PAVEMENT.
(1B) UTILITY TRENCH AND SURFACE REPAIR PER CITY STANDARD ON SHT. NO. 18, MODIFIED TO ACCOMMODATE SLURRY BACKFILL WHERE BOX COVER IS LESS THAN 2.0'
(1)(26) CONSTRUCT 6' X 4' PRE-CAST RCB APWA STD PLAN 39D-D OR APPOVED EQUAL. SEE JOINT SEALANT NOTE ON SHEET #1.
(2B) CONSTRUCT SEWER PROTECTION PER R.C.F.C.&W.C.D. STD. DWG. M8D7.
(29) PROTECT IN PLACE EXISTING UTILITIES
(30) CONSTRUCT JUNCTION STRUCTURE NO.1 PER R.C.F.C.&W.C.D. STD. DWG. JS226.
(31) CONSTRUCT TRANSITION STRUCTURE NO. 2 PER R.C.F.C.&W.C.D. STD. DWG. TS3D2.
(33) RELOCATE EXISTING 6" SEWER LAT. PER E.M.W.D. PLANS
(34) RELOCATE EXISTING WATER LINE PER E.M.W.D. PLANS.
(3B) SLURRY BACKFILL BETWEEN RCB AND MANHOLE.
(39) RELOCATE EXISTING GAS LINE.
(40) RELOCATE EXISTING ELECTRICAL LINE.
(41) RELOCATE EXISTING TELEPHONE LINE.
(42) CONSTRUCT PROPOSED 12" WATER MAIN, PER E.M.W.D. PLANS.
(43) CONSTRUCT PROPOSED 6" SEWER LATERAL, PER E.M.W.D. PLANS.
(44) SAWCUT, REMOVE AND REPLACE A.C. PAVEMENT SURFACE REPAIR PER CITY STD. ON SHEET 18. SEE SEPARTE PAVING PLANS.
(1)(51) REMOVE EXISTING SEWER LATERALS PER E.M.W.D. PLANS.

Don't Dig...Until You Call U.S.A. Toll Free 1-800-227-2600 for the location of buried utility lines. Don't disrupt vital services.
TWO WORKING DAYS BEFORE YOU DIG

BENCH MARK
COUNTY OF RIVERSIDE BENCHMARK NO. "H-31"
COUNTY OF RIVERSIDE BENCHMARK - 3 1/4" ALUMINUM DISK MARKED H-31, LOCATED FLUSH AT THE SOUTH WEST CORNER OF BRIDGE ON TOP OF SIDEWALK NEAR FACE OF CURB LOCATED AT THE CROSSING OF PERRIS BLVD. AND RIV. CO. FLOOD CONTROL CHANNEL (PERRIS LATERAL "A"), 43 FT. WEST OF CENTERLINE OF PERRIS BLVD. AND 4.5 FT. EAST OF CONCRETE BRIDGE BARRIER. (EDGE OF BRIDGE) MARKED H-102 D.M.R. IN TOP OF CONC. POST FLUSH W/ GROUND
ELEVATION = 1474.674' (NAVD 1929)

REF.	REVISIONS	ENGINEER APPR.	ENGINEER DATE	RCFC/ APPR.	RCFC/ DATE
2	CHANGED SLOPE TO 0.0015, ADDED MH, ADDED NEW 10"S, CHANGED 42" LAT TO 24" LAT ADDED EX. UTILITIES, RELOCATE UTILITIES, REVISED SD	H.I.A	2/29/16	AG	2/17/16
1	CHANGED CAST IN PLACE RCB TO PRE-CAST RCB PER APWA 390-0	H.I.A	2/29/16	AG	2/17/16

DESIGNED BY:
DRAWN BY:
DATE DRAWN:

APPROVED BY:
Thienes Engineering, Inc.
CIVIL ENGINEERING • LAND SURVEYING
14349 FIRESTONE BOULEVARD
LA MIRADA, CALIFORNIA 90638
PH.(714)521-4811 FAX(714)521-4173
Haidook I. Aghaian Date: 2/17/16
HAIDOOK I. AGHAIAN RCE NO. 43293

REGISTERED PROFESSIONAL ENGINEER HAIDOOK I. AGHAIAN R.C.E. NO. 43293 Exp. 3-31-16 CIVIL STATE OF CALIFORNIA

RIVERSIDE COUNTY FLOOD CONTROL AND WATER CONSERVATION DISTRICT
RECOMMENDED FOR APPROVAL BY: DATE:
APPROVED BY: DATE:

CITY OF PERRIS
APPROVED BY:
CITY ENGINEER 2-9-16 DATE:
RECOMMENDED DATE:

PERRIS VALLEY MDP LINE "A-B"
FROM STA. 42+10 TO STA. 46+20

CITY OF PERRIS FILE NO. P8-1013
PROJECT NO. 4-0-00537
DRAWING NO. 4-1063
SHEET NO. 10A OF 18

Last Update: 1/29/16
O:\2700-2799\2702\2702F\2702SD10.dwg

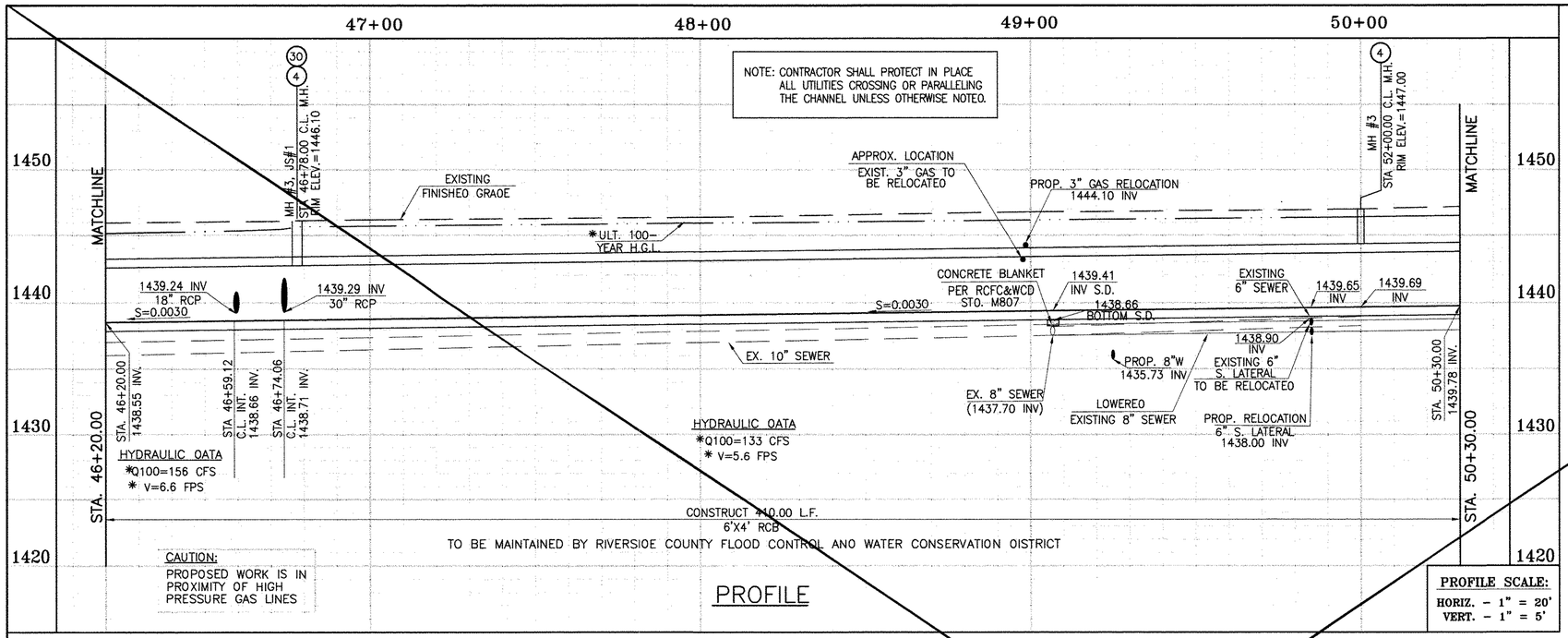

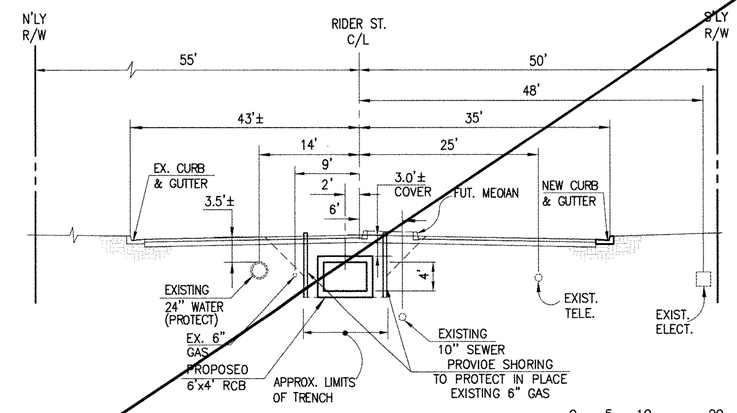

SECTION AT STA. 47+00.00
FROM STA 46+67.27 TO STA 47+76.81

* THE ULTIMATE H.G.L. IS BASED ON THE ADOPTED MDP WATER SURFACE ELEVATION OF 1433 IN THE PERRIS VALLEY STORM CHANNEL (PVSC) AT RIDER STREET, AND ASSUMES THAT FULL CHANNEL IMPROVEMENTS HAVE BEEN CONSTRUCTED PER THE ADOPTED MDP. FOR ALL WATER SURFACE ELEVATIONS BETWEEN 1433 AND THE 100-YEAR FLOOD ELEVATION FOR PVSC (1437.5), LINE "A-B" WILL NOT HAVE CAPACITY FOR LOCAL 100-YEAR FLOWS.

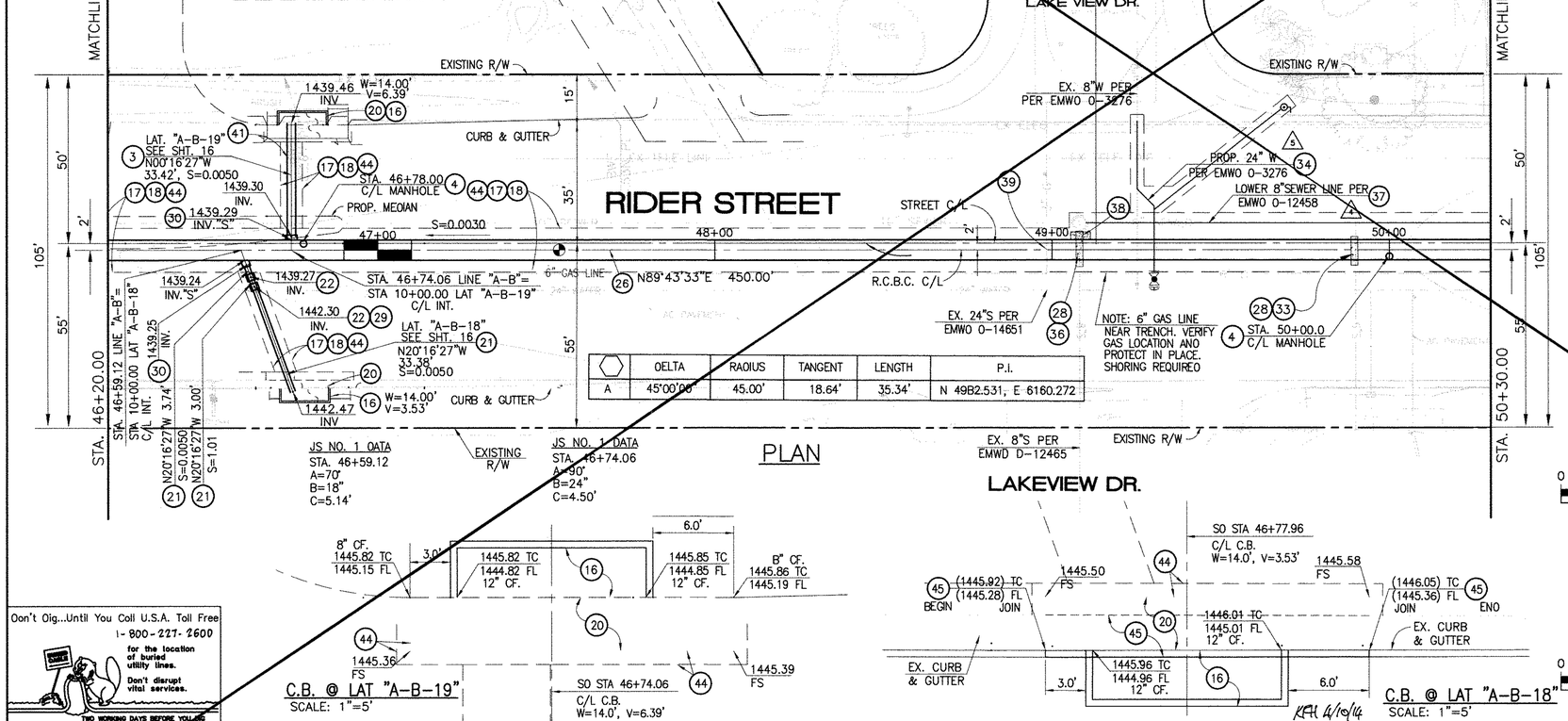

	DELTA	RADIUS	TANGENT	LENGTH	P.I.
A	45°00'00"	45.00'	18.64'	35.34'	N 49B2.531, E 6160.272

C.B. @ LAT "A-B-19"
SCALE: 1"=5'

C.B. @ LAT "A-B-18"
SCALE: 1"=5'

KPH 4/10/14

STORM DRAIN CONSTRUCTION NOTES:

(3) CONSTRUCT 30" R.C.P, 0-LOAD PER PLAN.
(4) CONSTRUCT MANHOLE NO.3 PER R.C.F.C.&W.C.D. STD OWG. MH253
(16) CONSTRUCT CATCH BASIN NO.1 PER R.C.F.C.&W.C.D. STD. OWG. CB100
(17) SAWCUT AND REMOVE EXISTING A.C. PAVEMENT.
(18) UTILITY TRENCH AND SURFACE REPAIR PER CITY STANDARD ON SHT. NO. 18, MODIFIED TO ACCOMMODATE SLURRY BACKFILL WHERE BOX COVER IS LESS THAN 2.0'.
(20) CONSTRUCT LOCAL DEPRESSION NO. 2 CASE "B" PER R.C.F.C.&W.C.D. STD. OWG. L0201.
(21) CONSTRUCT 18" R.C.P, 0-LOAD PER PLAN.
(22) CONSTRUCT CONCRETE COLLAR PER R.C.F.C.&W.C.D. STD OWG. M803.
(26) CONSTRUCT 6' X 4' RCB PER CALTRANS STD PLAN NO. 080. OR APPROVED EQUAL.
(28) CONSTRUCT SEWER PROTECTION PER R.C.F.C.&W.C.D. STD. OWG. M807.
(29) PROTECT IN PLACE EXISTING UTILITY
(30) CONSTRUCT JUNCTION STRUCTURE NO.1 PER R.C.F.C.&W.C.D. STD. OWG. JS226.
(33) RELOCATE EXISTING SEWER LATERALS PER E.M.W.D. PLANS.
(34) RELOCATE EXISTING WATER LINE PER E.M.W.D. PLANS.
(36) INSTALL NEW SEWER LATERAL PER E.MW.D. PLANS.
(37) LOWER EXISTING SEWER MAIN PER E.M.W.D. PLANS.
(38) SLURRY BACKFILL BETWEEN RCB AND MANHOLE.
(39) RELOCATE EXISTING GAS LINE.
(41) RELOCATE EXISTING TELEPHONE LINE.
(44) SAWCUT, REMOVE AND REPLACE A.C. PAVEMENT SURFACE REPAIR PER CITY STD. ON SHEET 18. SEE SEPARATE PAVING PLANS.
(45) REMOVE EXISTING CONCRETE CURB AND GUTTER.

Don't Dig...Until You Call U.S.A. Toll Free 1-800-227-2600 for the location of buried utility lines. Don't disrupt vital services. TWO WORKING DAYS BEFORE YOU DIG

BENCH MARK
COUNTY OF RIVERSIDE BENCHMARK NO. "M-31"
COUNTY OF RIVERSIDE BENCHMARK 3-1/4" ALUMINUM DISK MARKED M-31, LOCATED FLUSH AT THE SOUTH WEST CORNER OF BRIDGE ON TOP OF SIDEWALK NEAR FACE OF CURB LOCATED AT THE CROSSING OF PERRIS BLVD. AND RIV. CO. FLOOD CONTROL CHANNEL (PERRIS LATERAL 7J) 43 FT. WEST OF CENTERLINE OF PERRIS BLVD. AND 4.5 FT. EAST OF CONCRETE BRIDGE BARRIER. (EDGE OF BRIDGE) MARKED BY TAG O.M.R. IN TOP OF CONC. POST FLUSH W/ GROUND
ELEVATION = 1474.674' (NAVD 1929)

REF.	REVISIONS / DESCRIPTION	ENGINEER APPR.	DATE	RCFC/ APPR.	DATE
	SUPERSEDED BY SHEET 11A	H.I.A	2/25/16	[illegible]	2/25/16

DESIGNED BY: BW
DRAWN BY: ET
DATE DRAWN:

APPROVED BY:
Thienes Engineering, Inc.
CIVIL ENGINEERING • LAND SURVEYING
14349 FIRESTONE BOULEVARD
LA MIRADA, CALIFORNIA 90638
PH.(714)521-4811 FAX(714)521-4173
Haidook Aghaian Date: 11/18/14
HAIDOOK I. AGHAIAN RCE NO. 43293

REGISTERED PROFESSIONAL ENGINEER HAIDOOK I. AGHAIAN R.C.E. NO. 43293 Exp. 3-31-16 CIVIL STATE OF CALIFORNIA

RIVERSIDE COUNTY FLOOD CONTROL AND WATER CONSERVATION DISTRICT
RECOMMENDED FOR APPROVAL BY: DATE: 1/20/2015
APPROVED BY: Mark A. Wills DATE: 1/20/2015

CITY OF PERRIS
APPROVED BY: CITY ENGINEER DATE: 12-15-14
RECOMMENDED DATE:

PERRIS VALLEY MDP LINE "A-B"

FROM STA. 46+20 TO STA. 50+30

CITY OF PERRIS FILE NO. P8-1013
PROJECT NO. 4-0-00537
DRAWING NO. 4-1063
SHEET NO. 11 OF 18

Last Update: 11/18/14
0:\2700-2799\2702\2702F\2702SD11.dwg

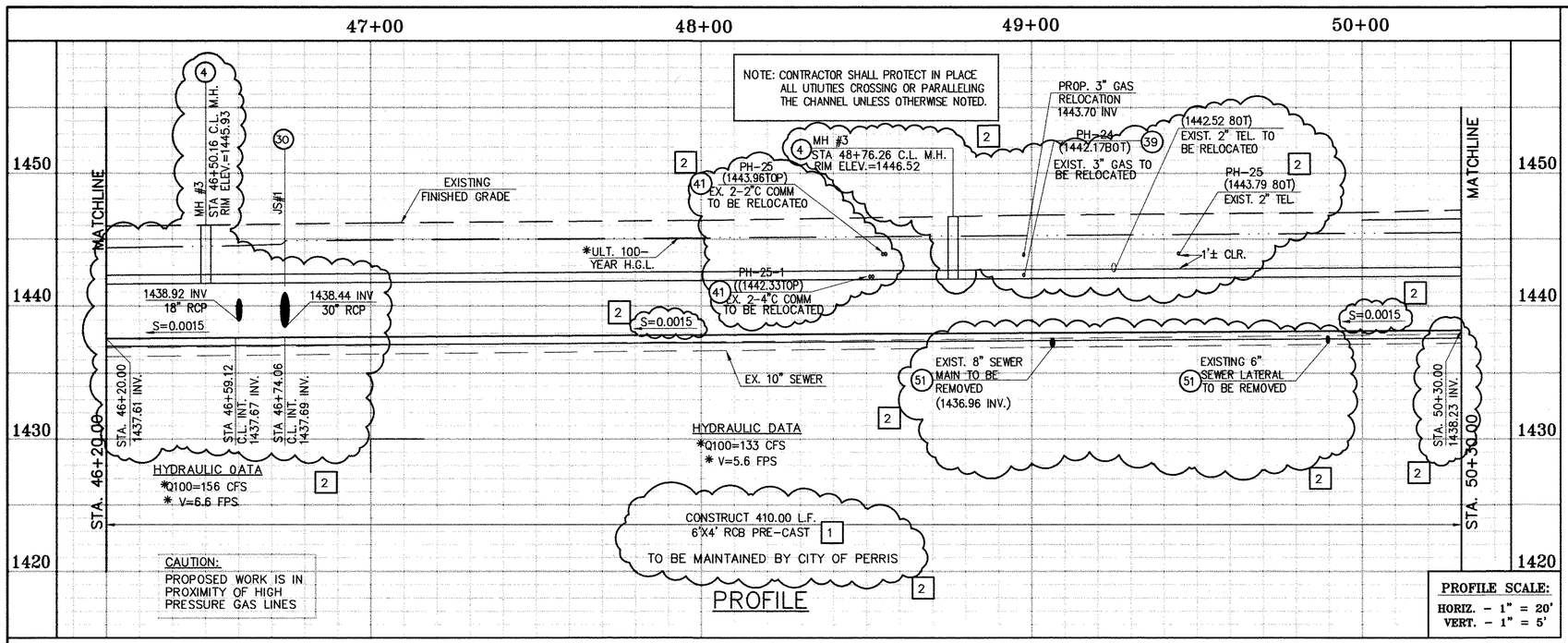

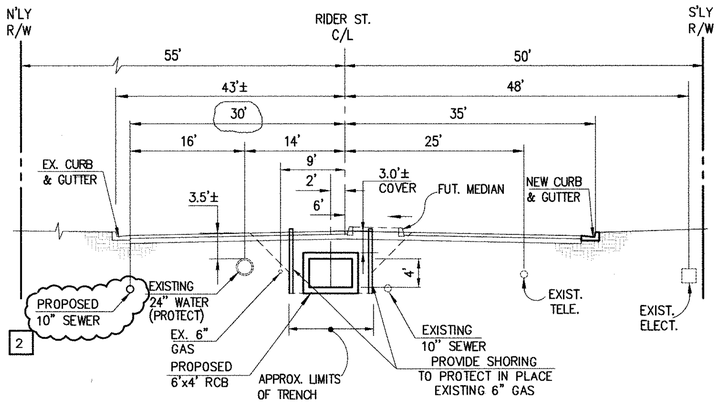

SECTION AT STA. 47+00.00
FROM STA 46+67.27 TO STA 47+76.81

SCALE:1"=10'

✳ THE ULTIMATE H.G.L. IS BASED ON THE ADOPTED MDP WATER SURFACE ELEVATION OF 1433 IN THE PERRIS VALLEY STORM CHANNEL (PVSC) AT RIDER STREET, AND ASSUMES THAT FULL CHANNEL IMPROVEMENTS HAVE BEEN CONSTRUCTED PER THE ADOPTED MDP. FOR ALL WATER SURFACE ELEVATIONS BETWEEN 1433 AND THE 100-YEAR FLOOD ELEVATION FOR PVSC (1437.5), LINE "A-B" WILL NOT HAVE CAPACITY FOR LOCAL 100-YEAR FLOWS.

STORM DRAIN CONSTRUCTION NOTES:

(3) CONSTRUCT 30" R.C.P, D-LOAD PER PLAN.
(4) CONSTRUCT MANHOLE NO.3 PER R.C.F.C.&W.C.D. STD DWG. MH253
(16) CONSTRUCT CATCH BASIN NO.1 PER R.C.F.C.&W.C.D. STD. DWG. CB100
(17) SAWCUT AND REMOVE EXISTING A.C. PAVEMENT.
(18) UTILITY TRENCH AND SURFACE REPAIR PER CITY STANDARD ON SHT. NO. 18, MODIFIED TO ACCOMMODATE SLURRY BACKFILL WHERE BOX COVER IS LESS THAN 2.0'.
(20) CONSTRUCT LOCAL DEPRESSION NO. 2 CASE "B" PER R.C.F.C.&W.C.D. STD. DWG. LD201.
(21) CONSTRUCT 18" R.C.P, D-LOAD PER PLAN.
(22) CONSTRUCT CONCRETE COLLAR PER R.C.F.C.&W.C.D. STD DWG. M803.
[1] (26) CONSTRUCT 6' X 4' PRE-CAST RCB APWA STD PLAN 390-0 OR APPROVED EQUAL. SEE JOINT SEALANT NOTE ON SHEET #1.
(28) CONSTRUCT SEWER PROTECTION PER R.C.F.C.&W.C.D. STD. DWG. M807.
(29) PROTECT IN PLACE EXISTING UTILITY
(30) CONSTRUCT JUNCTION STRUCTURE NO.1 PER R.C.F.C.&W.C.D. STD. DWG. JS226.
(33) RELOCATE EXISTING SEWER LATERALS PER E.M.W.D. PLANS.
(34) RELOCATE EXISTING WATER LINE PER E.M.W.D. PLANS.
(36) INSTALL NEW SEWER LATERAL PER E.MW.D. PLANS.
(37) LOWER EXISTING SEWER MAIN PER E.M.W.D. PLANS.
(38) SLURRY BACKFILL BETWEEN RCB AND MANHOLE.
(39) RELOCATE EXISTING GAS LINE.
(41) RELOCATE EXISTING TELEPHONE LINE.
(44) SAWCUT, REMOVE AND REPLACE A.C. PAVEMENT SURFACE REPAIR PER CITY STD. ON SHEET 18. SEE SEPARATE PAVING PLANS.
(45) REMOVE EXISTING CONCRETE CURB AND GUTTER.
[2] (51) REMOVE EXISTING SEWER LATERALS PER E.M.W.D. PLANS.

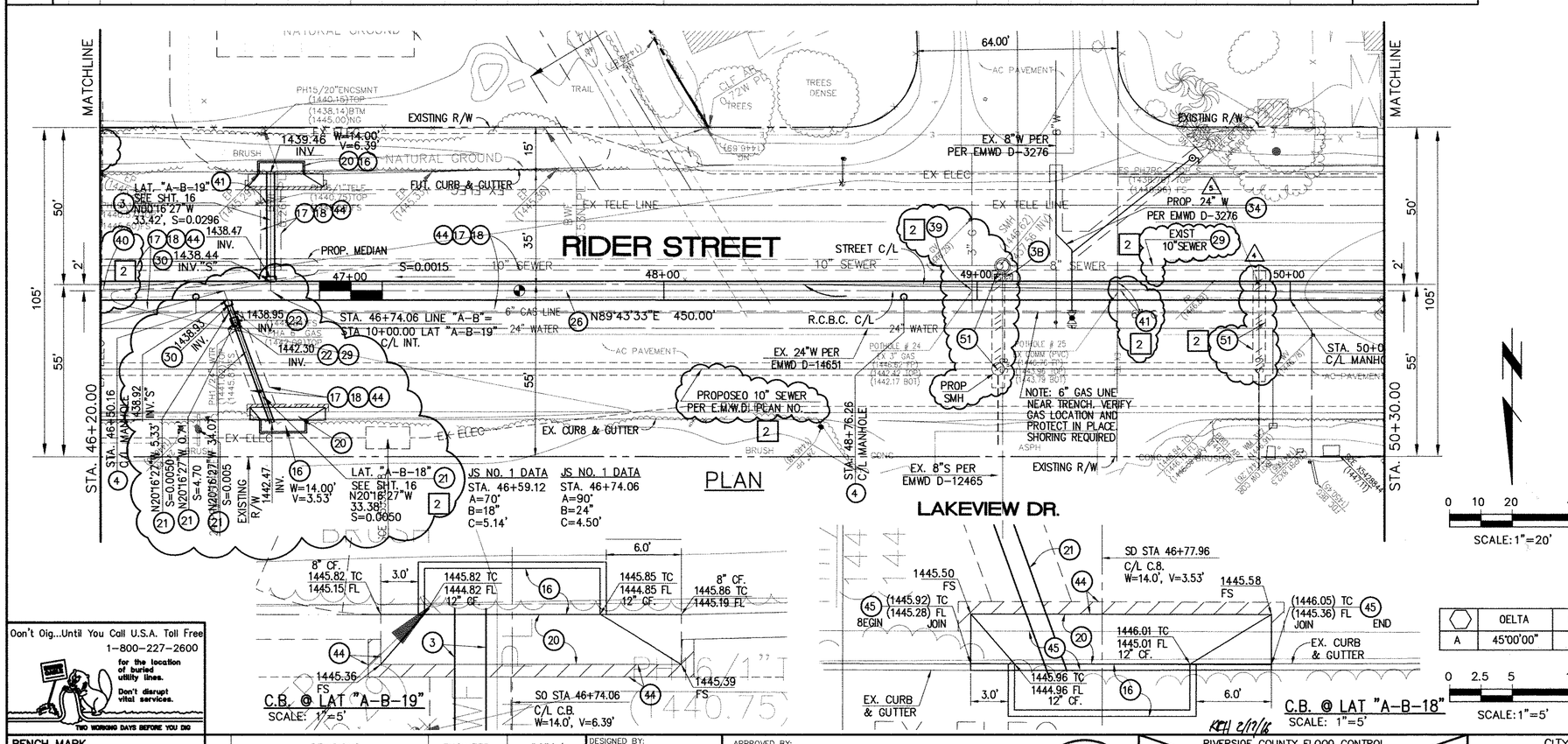

	OELTA	RAOIUS	TANGENT	LENGTH	P.I.
A	45°00'00"	45.00'	18.64'	35.34'	N 4982.531, E 6160.272

Oon't Oig...Until You Call U.S.A. Toll Free 1-800-227-2600 for the location of buried utility lines. Don't disrupt vital services.
TWO WORKING DAYS BEFORE YOU DIG

BENCH MARK
COUNTY OF RIVERSIDE BENCHMARK NO. "M-31"
COUNTY OF RIVERSIDE BENCHMARK - 3 1/4" ALUMINUM DISK MARKED M-31, LOCATED FLUSH AT THE SOUTH WEST CORNER OF BRIDGE ON TOP OF SIDEWALK NEAR FACE OF CURB LOCATED AT THE CROSSING OF PERRIS BLVD. AND RIV. CO. FLOOD CONTROL CHANNEL (PERRIS LATERAL "A"). 43 FT. WEST OF CENTERLINE OF PERRIS BLVD. AND 4.5 FT. EAST OF CONCRETE BRIDGE BARRIER. (EDGE OF BRIDGE) MARKED R-102 D.W.R. IN TOP OF CONC. POST FLUSH W/ GROUND
ELEVATION = 1474.674' (NAVD 1929)

REF.	REVISIONS	ENGINEER APPR.	ENGINEER DATE	RCFC/ APPR.	RCFC/ DATE
2	CHANGED SLOPE TO 0.0015, ADDED MH, ADDED NEW 10"S, CHANGED 42" LAT TO 24" LAT. ADDED EX. UTILITIES, RELOCATE UTILITIES, REVISED SD	H.I.A.	2/29/16	76	4-2-16
1	CHANGED CAST IN PLACE RCB TO PRE-CAST RCB PER APWA 390-0	H.I.A.	2/25/16	76	4-1-16

DESIGNED BY:
DRAWN BY:
DATE DRAWN:

APPROVED BY:
Thienes Engineering, Inc.
CIVIL ENGINEERING • LAND SURVEYING
14349 FIRESTONE BOULEVARD
LA MIRADA, CALIFORNIA 90638
PH.(714)521-4811 FAX(714)521-4173
Haidook Aghaian Date: 2/11/16
HAIDOOK I. AGHAIAN RCE NO. 43293

REGISTERED PROFESSIONAL ENGINEER HAIDOOK I. AGHAIAN R.C.E. NO. 43293 Exp. 3-31-16 CIVIL STATE OF CALIFORNIA

RIVERSIOE COUNTY FLOOD CONTROL AND WATER CONSERVATION DISTRICT
RECOMMENDED FOR APPROVAL BY: DATE:
APPROVED BY: DATE:

CITY OF PERRIS
APPROVED BY: CITY ENGINEER DATE: 2-9-16
RECOMMENDED DATE:

CITY OF PERRIS
FILE NO. P8-1013

PERRIS VALLEY MDP LINE "A-B"

FROM STA. 46+20 TO STA. 50+30

PROJECT NO. 4-0-00537
DRAWING NO. 4-1063
SHEET NO. 11A OF 18

Last Update: 1/15/16
O:\2700-2799\2702\2702F\2702SD11.dwg

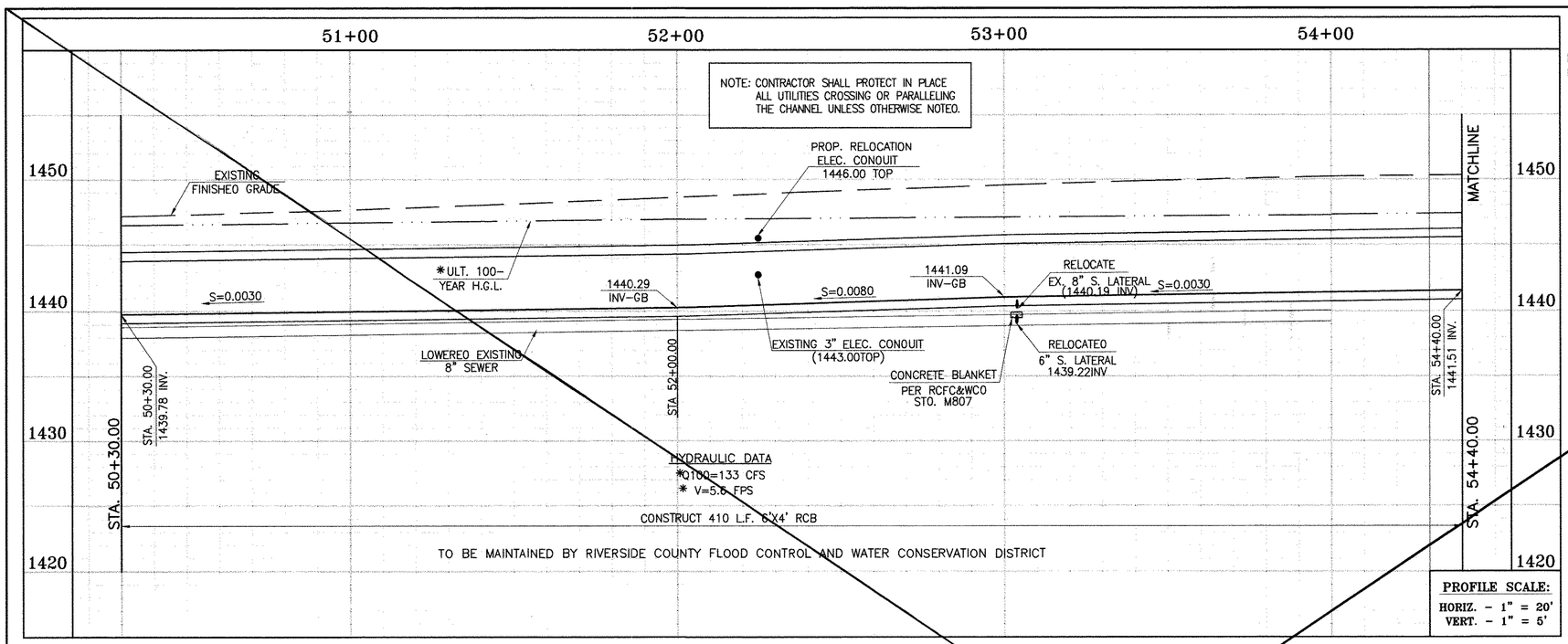

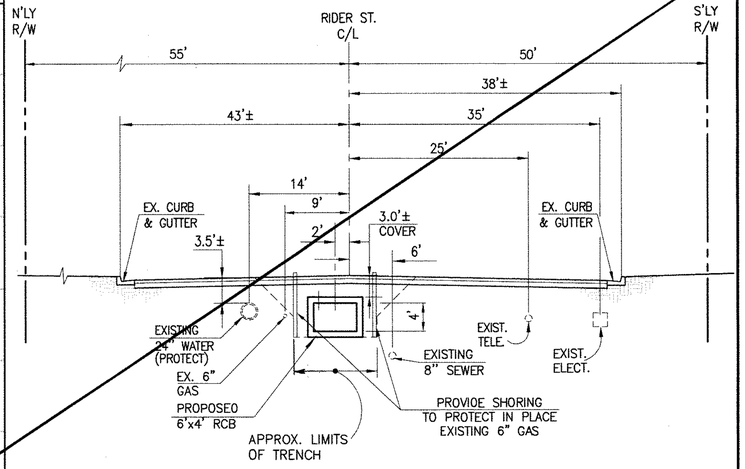

SECTION AT STA. 51+00.00

FROM STA 50+30.00 TO STA 54+40.00

0 5 10 20

SCALE:1"=10'

* THE ULTIMATE H.G.L. IS BASED ON THE ADOPTED MDP WATER SURFACE ELEVATION OF 1433 IN THE PERRIS VALLEY STORM CHANNEL (PVSC) AT RIDER STREET, AND ASSUMES THAT FULL CHANNEL IMPROVEMENTS HAVE BEEN CONSTRUCTED PER THE ADOPTED MDP. FOR ALL WATER SURFACE ELEVATIONS BETWEEN 1433 AND THE 100-YEAR FLOOD ELEVATION FOR PVSC (1437.5), LINE "A-B" WILL NOT HAVE CAPACITY FOR LOCAL 100-YEAR FLOWS.

CAUTION:
PROPOSED WORK IS IN PROXIMITY OF HIGH PRESSURE GAS LINES

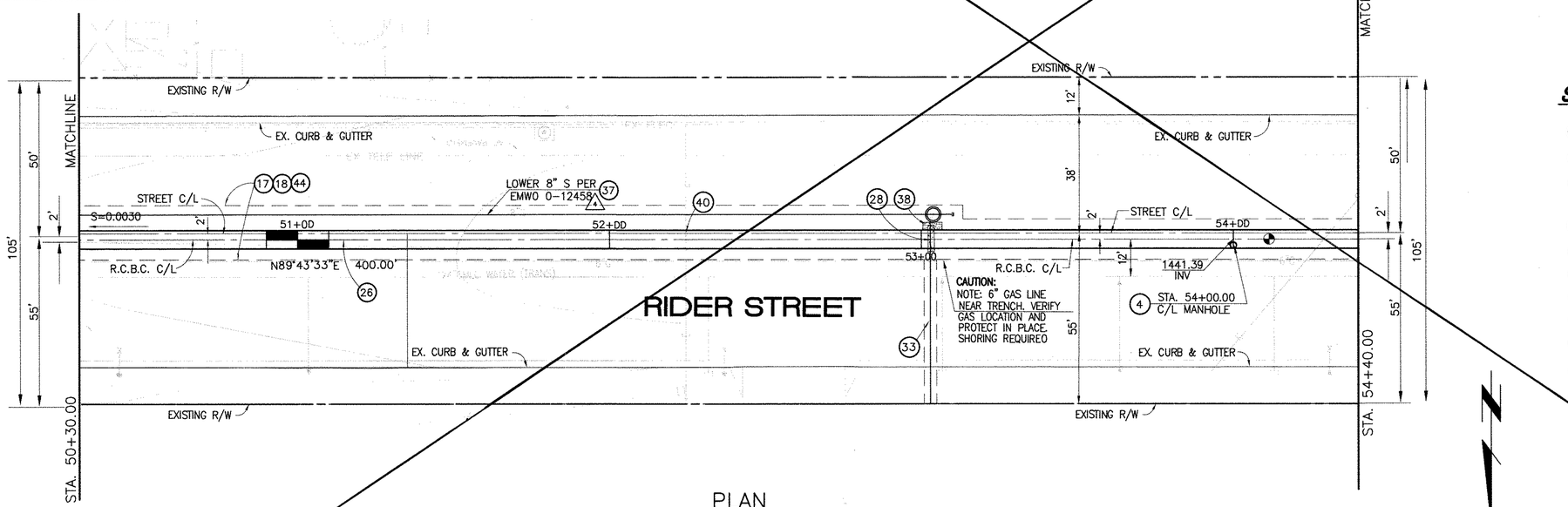

PLAN

0 10 20 40

SCALE:1"=20'

STORM DRAIN CONSTRUCTION NOTES:

(4) CONSTRUCT MANHOLE NO. 3 PER R.C.F.C.&W.C.D. STD OWG. MH253

(17) SAWCUT AND REMOVE EXISTING A.C. PAVEMENT.

(18) UTILITY TRENCH AND SURFACE REPAIR PER CITY STANDARD ON SHT. NO. 18, MODIFIED TO ACCOMMODATE SLURRY BACKFILL WHERE BOX COVER IS LESS THAN 2.0'.

(26) CONSTRUCT 6' X 4' RCB PER CALTRANS STD. PLAN NO. 080 OR APPROVED EQUAL.

(28) CONSTRUCT SEWER PROTECTION PER R.C.F.C.&W.C.D. STD. OWG. M807.

(33) RELOCATE EXISTING 6" SEWER LATERAL PER E.M.W.D. PLANS.

(37) LOWER EXISTING 8" SEWER MAIN PER E.M.W.D. PLANS.

(38) SLURRY BACKFILL BETWEEN RCB AND MANHOLE.

(39) RELOCATE EXISTING GAS LINE.

(40) RELOCATE EXISTING ELECTRICAL LINE.

(44) SAWCUT, REMOVE AND REPLACE A.C. PAVEMENT SURFACE REPAIR PER CITY STD. ON SHEET 18. SEE SEPARATE PAVING PLANS.

Don't Dig...Until You Call U.S.A. Toll Free 1-800-227-2600 for the location of buried utility lines. Don't disrupt vital services.

TWO WORKING DAYS BEFORE YOU DIG

BENCH MARK

COUNTY OF RIVERSIDE BENCHMARK NO. "M-31"
COUNTY OF RIVERSIDE BENCHMARK 3-3 1/4" ALUMINUM DISK MARKED M-31, LOCATED FLUSH @ THE SOUTH WEST CORNER OF BRIDGE ON TOP OF SIDEWALK NEAR FACE OF CURB LOCATED AT THE CROSSING OF PERRIS BLVD. AND RIV. CO. FLOOD CONTROL CHANNEL (PERRIS LATERAL "J"), 43 FT. WEST OF CENTERLINE OF PERRIS BLVD. AND 4.5 FT. EAST OF CONCRETE BRIDGE BARRIER. (EDGE OF BRIDGE) MARKED BY 1/2 D.W.S. IN TOP OF CONC. POST FLUSH W/ GROUND
ELEVATION = 1474.674' (NAVD 1929)

REF.	REVISIONS	ENGINEER	DATE	APPR.	DATE
	SUPERSEDED BY SHEET 12A	H.I.A.	2/26/14	KH	2/27/14

DESIGNED BY: BW
DRAWN BY: ET
DATE DRAWN:

APPROVED BY:
Thienes Engineering, Inc.
CIVIL ENGINEERING • LAND SURVEYING
14349 FIRESTONE BOULEVARD
LA MIRADA, CALIFORNIA 90638
PH.(714)521-4811 FAX(714)521-4173
HAIDOOK I. AGHAIAN Date: 11/18/14
RCE NO. 43293

REGISTERED PROFESSIONAL ENGINEER HAIDOOK I. AGHAIAN R.C.E. NO. 43293 Exp. 3-31-16 CIVIL STATE OF CALIFORNIA

KH 4/10/14

RIVERSIDE COUNTY FLOOD CONTROL AND WATER CONSERVATION DISTRICT
RECOMMENDED FOR APPROVAL BY: DATE: 1/20/2015
APPROVED BY: Mark A. Wills DATE: 1/20/2015

CITY OF PERRIS
APPROVED BY:
CITY ENGINEER DATE: 12-15-14
RECOMMENDED DATE:

PERRIS VALLEY MDP LINE "A-B"

FROM STA. 50+30 TO STA. 54+40

CITY OF PERRIS
FILE NO. P8-1013
PROJECT NO. 4-0-00537
DRAWING NO. 4-1063
SHEET NO. 12 OF 18

Last Update: 11/18/14
O:\2700-2799\2702\2702F\2702SD12.dwg

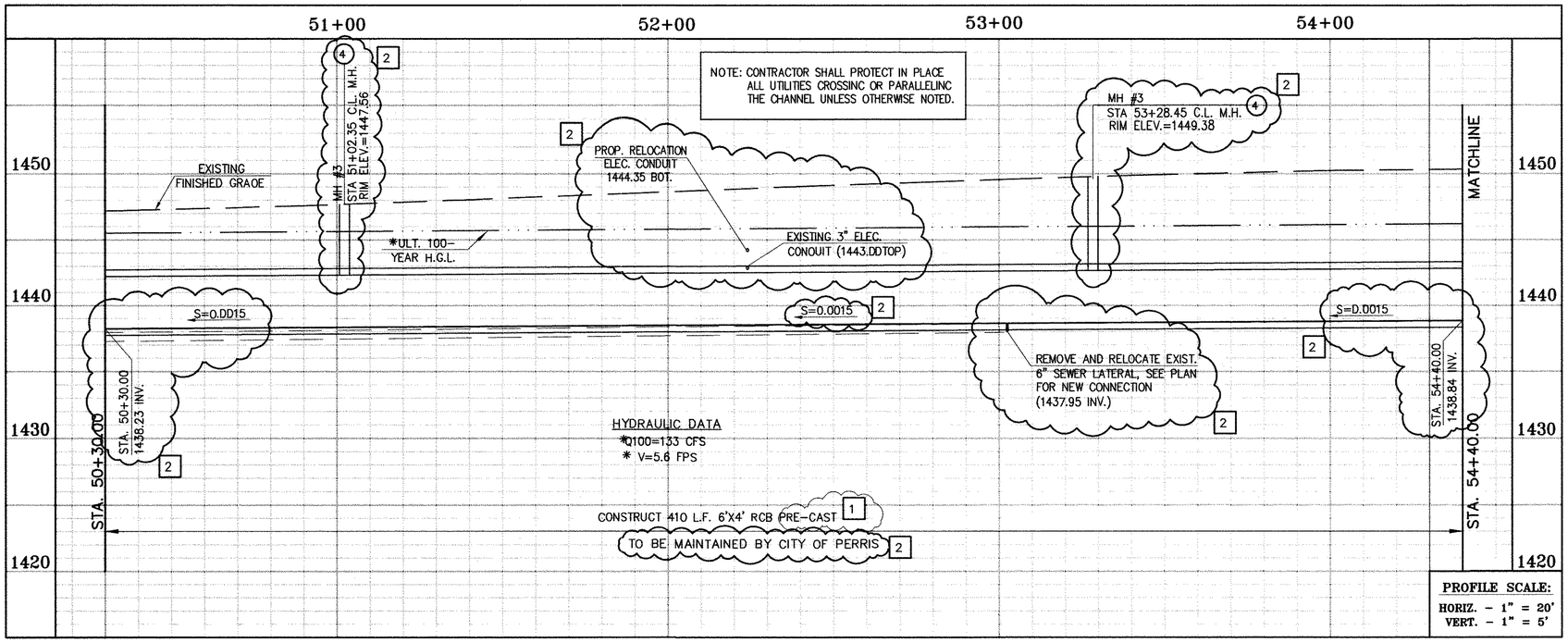

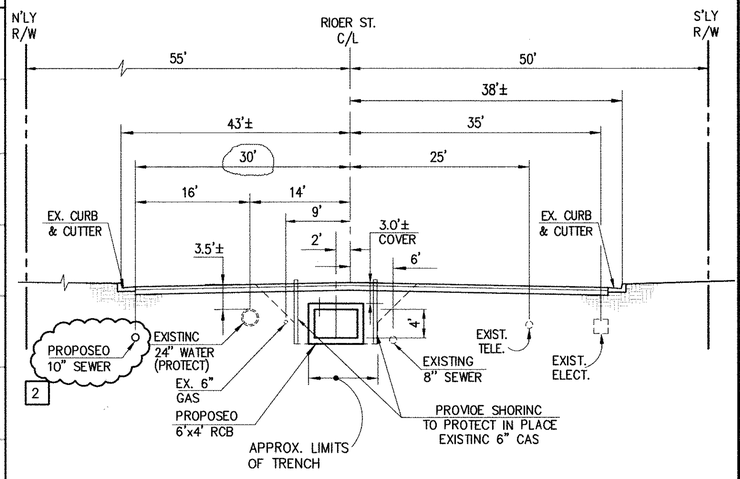

SECTION AT STA. 51+00.00

FROM STA 50+30.00 TO STA 54+40.00

0 5 10 20

SCALE: 1"=10'

CAUTION:
PROPOSEO WORK IS IN PROXIMITY OF HIGH PRESSURE GAS LINES

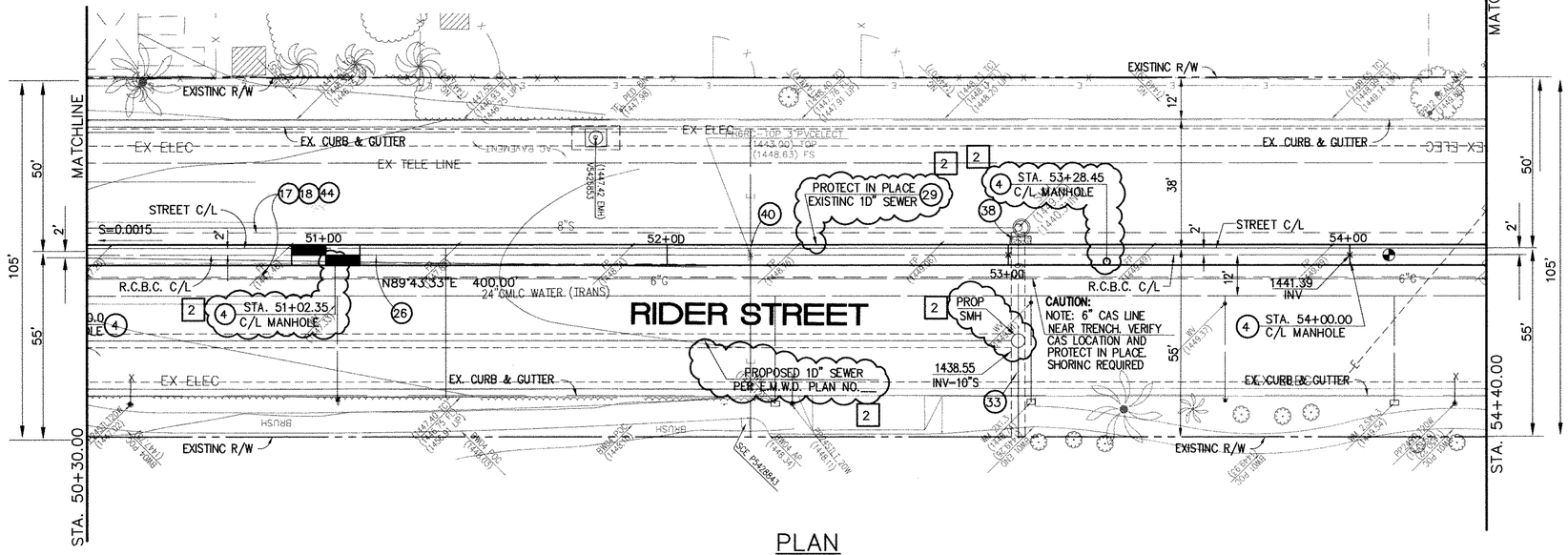

PLAN

0 10 20 40

SCALE: 1"=20'

THE ULTIMATE H.G.L. IS BASED ON THE AOOPTEO MOP WATER SURFACE ELEVATION OF 1433 IN THE PERRIS VALLEY STORM CHANNEL (PVSC) AT RIOER STREET, AND ASSUMES THAT FULL CHANNEL IMPROVEMENTS HAVE BEEN CONSTRUCTEO PER THE AOOPTED MOP. FOR ALL WATER SURFACE ELEVATIONS BETWEEN 1433 ANO THE 100-YEAR FLOOO ELEVATION FOR PVSC (1437.5), LINE "A-B" WILL NOT HAVE CAPACITY FOR LOCAL 100-YEAR FLOWS.

STORM DRAIN CONSTRUCTION NOTES:

(4) CONSTRUCT MANHOLE NO. 3 PER R.C.F.C.&W.C.O. STD DWC. MH253

(17) SAWCUT ANO REMOVE EXISTING A.C. PAVEMENT.

(18) UTILITY TRENCH AND SURFACE REPAIR PER CITY STANDARD ON SHT. NO. 18, MOOIFIEO TO ACCOMMOOATE SLURRY BACKFILL WHERE BOX COVER IS LESS THAN 2.0'.

[1] (26) CONSTRUCT 6' X 4' PRE-CAST RCB APWA STD PLAN 390-O OR APPROVEO EQUAL. SEE JOINT SEALANT NOTE ON SHEET #1.

(28) CONSTRUCT SEWER PROTECTION PER R.C.F.C.&W.C.O. STD. OWG. M807.

(29) PROTECT IN PLACE EXISTINC UTILITY

(33) RELOCATE EXISTING 6" SEWER LATERAL PER E.M.W.O. PLANS.

(38) SLURRY BACKFILL BETWEEN RCB ANO MANHOLE.

(39) RELOCATE EXISTINC CAS LINE.

(40) RELOCATE EXISTINC ELECTRICAL LINE.

(44) SAWCUT, REMOVE AND REPLACE A.C. PAVEMENT SURFACE REPAIR PER CITY STD. ON SHEET 18. SEE SEPARATE PAVINC PLANS.

Don't Dig...Until You Call U.S.A. Toll Free
1-800-227-2600
for the location of buried utility lines.
Don't disrupt vital services.
TWO WORKING DAYS BEFORE YOU DIG

BENCH MARK

COUNTY OF RIVERSIDE BENCHMARK NO. "M-31"
COUNTY OF RIVERSIDE BENCHMARK - 3 1/4" ALUMINUM DISK MARKED M-31, LOCATED FLUSH AT THE SOUTH WEST CORNER OF BRIDGE ON TOP OF SIDEWALK NEAR FACE OF CURB LOCATED AT THE CROSSING OF PERRIS BLVD. AND RIV. CO. FLOOD CONTROL CHANNEL (PERRIS LATERAL "A"). 43 FT. WEST OF CENTERLINE OF PERRIS BLVD. AND 4.5 FT. EAST OF CONCRETE BRIDGE BARRIER. (EDGE OF BRIDGE) MARKED R-102 D.W.R. IN TOP OF CONC. POST FLUSH W/ GROUND
ELEVATION = 1474.674' (NAVD 1929)

REF.	DESCRIPTION	ENGINEER APPR.	ENGINEER DATE	RCFC/ APPR.	RCFC/ DATE
2	CHANGED SLOPE TO 0.0015, ADDED MH, ADDED NEW 10"S, CHANGED 42" LAT TO 24" LAT ADDED EX. UTILITIES, RELOCATE UTILITIES, REVISED SD	H.I.A	2/25/16	DTA	2/17/16
1	CHANGED CAST IN PLACE RCB TO PRE-CAST RCB PER APWA 390-0	H.I.A	2/25/16	DTA	2/17/16

DESIGNED BY:
DRAWN BY:
DATE DRAWN:

APPROVED BY:
Thienes Engineering, Inc.
CIVIL ENGINEERING • LAND SURVEYING
14349 FIRESTONE BOULEVARD
LA MIRADA, CALIFORNIA 90638
PH.(714)521-4811 FAX(714)521-4173
HAIDOOK I. AGHAIAN Date: 2/1/16
HAIDOOK I. AGHAIAN RCE NO. 43293

REGISTERED PROFESSIONAL ENGINEER - HAIDOOK I. AGHAIAN - R.C.E. NO. 43293 - Exp. 3-31-16 - CIVIL - STATE OF CALIFORNIA

KH 2/17/16

RIVERSIOE COUNTY FLOOD CONTROL AND WATER CONSERVATION OISTRICT
RECOMMENDED FOR APPROVAL BY: DATE:
APPROVED BY: DATE:

CITY OF PERRIS
APPROVED BY:
CITY ENGINEER DATE: 2-9-16
RECOMMENDED DATE:

CITY OF PERRIS
FILE NO. P8-1013

PERRIS VALLEY MDP
LINE "A-B"
FROM STA. 50+30 TO STA. 54+40

PROJECT NO. 4-0-00537
DRAWING NO. 4-1063
SHEET NO. 12A OF 18

Last Update:1/29/16
O:\2700-2799\2702\2702F\2702SD12.dwg

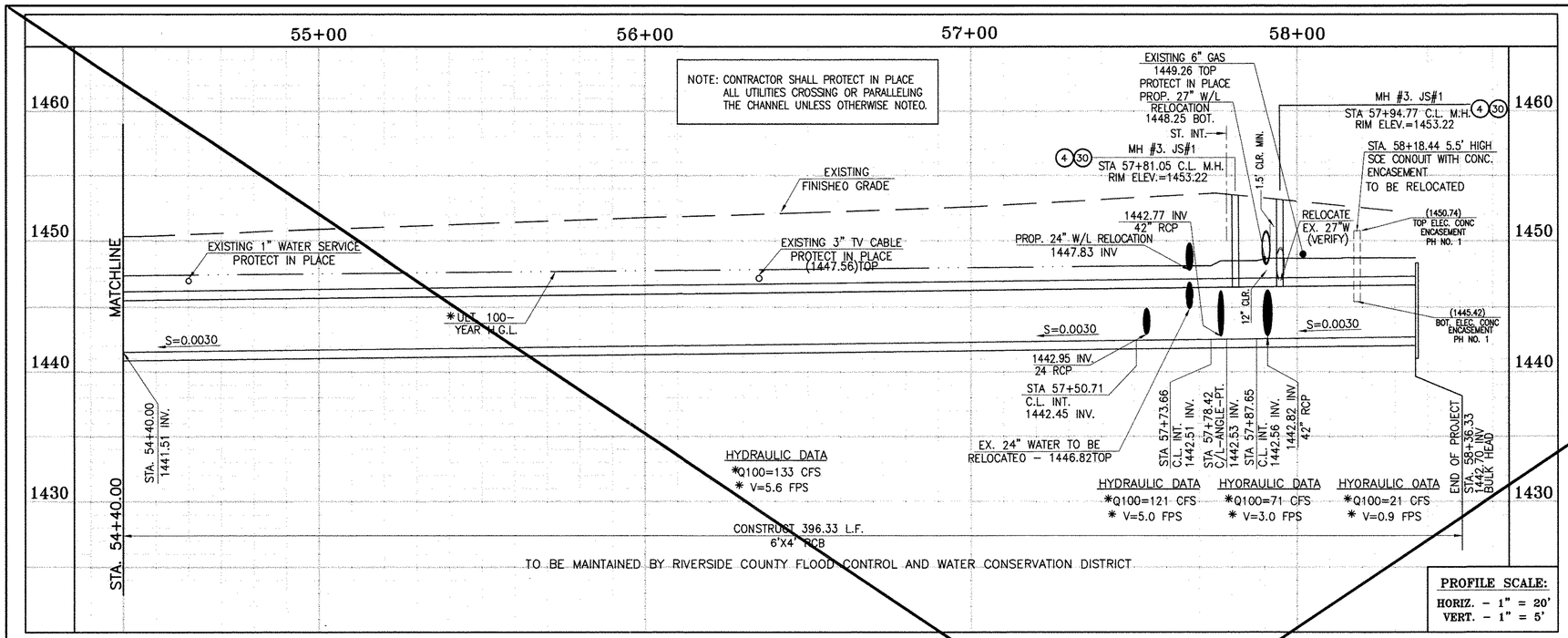

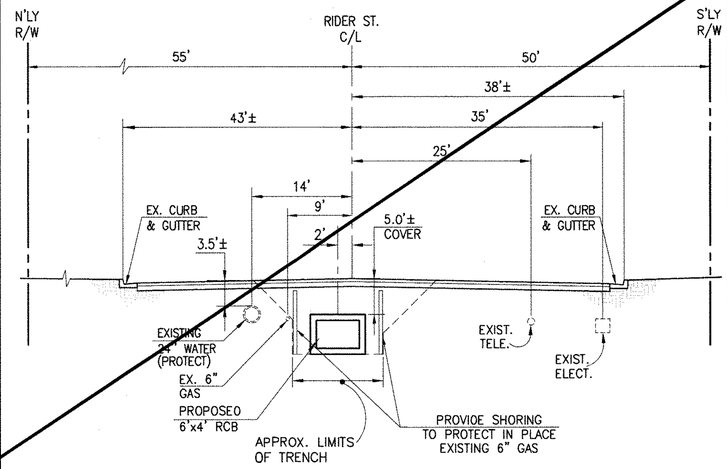

SECTION AT STA. 55+00.00

FROM STA 54+40.00 TO STA 58+36.36

SCALE:1"=10'

CAUTION:
PROPOSED WORK IS IN PROXIMITY OF HIGH PRESSURE GAS LINES

✳ THE ULTIMATE H.G.L. IS BASED ON THE ADOPTED MOP WATER SURFACE ELEVATION OF 1433 IN THE PERRIS VALLEY STORM CHANNEL (PVSC) AT RIDER STREET, AND ASSUMES THAT FULL CHANNEL IMPROVEMENTS HAVE BEEN CONSTRUCTED PER THE ADOPTED MOP. FOR ALL WATER SURFACE ELEVATIONS BETWEEN 1433 AND THE 100-YEAR FLOOD ELEVATION FOR PVSC (1437.5), LINE "A-B" WILL NOT HAVE CAPACITY FOR LOCAL 100-YEAR FLOWS.

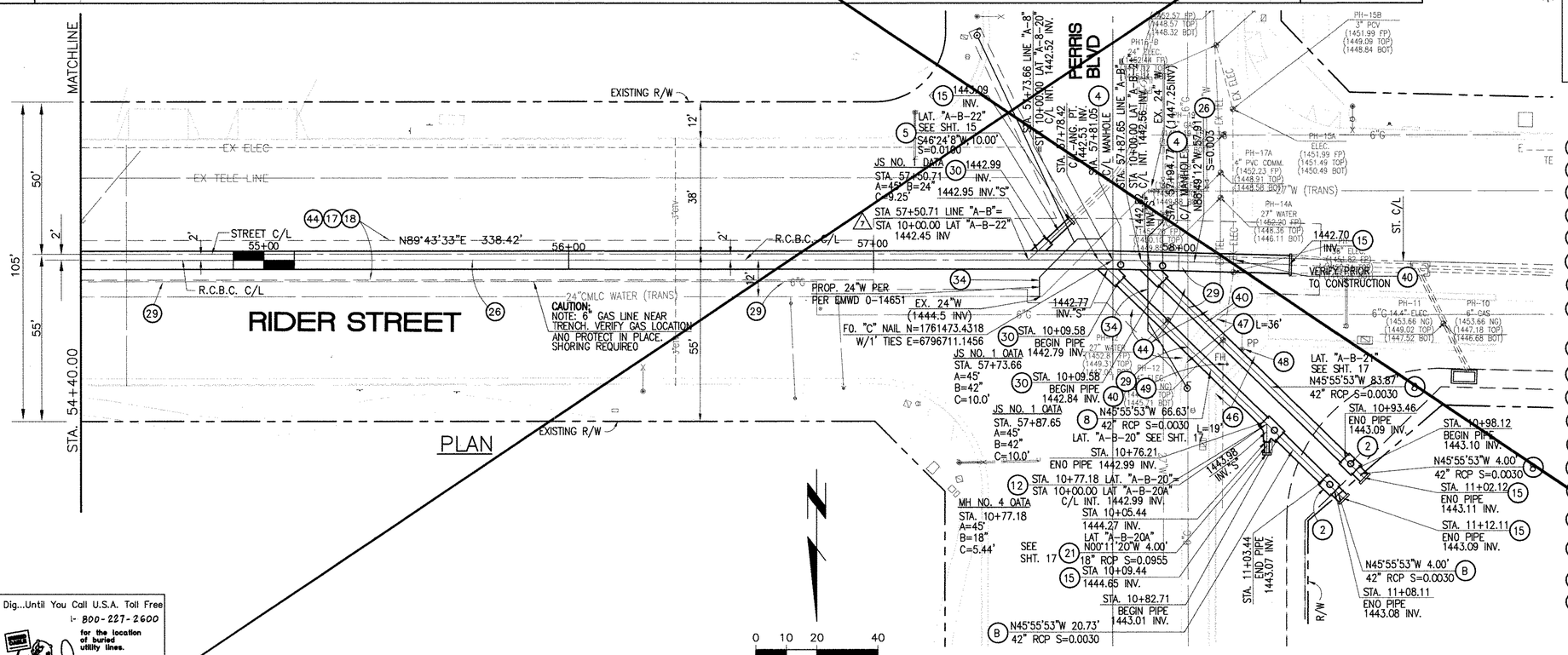

STORM DRAIN CONSTRUCTION NOTES:

(2) CONSTRUCT MANHOLE #2 PER R.C.F.C.&W.C.O. STO OWG. MH252
(4) CONSTRUCT MANHOLE #3 PER R.C.F.C.&W.C.D. STO DWG. MH253
(5) CONSTRUCT 24" R.C.P, O-LOAD PER PLAN.
(8) CONSTRUCT 42" R.C.P, O-LOAO PER PLAN.
(12) CONSTRUCT MANHOLE #4 PER R.C.F.C.&W.C.O. STO OWG. MH254
(15) CONSTRUCT CONCRETE BULKHEAD PER R.C.F.C.&W.C.O. STO OWG. M816.
(17) SAWCUT ANO REMOVE EXISTING A.C. PAVEMENT.
(18) UTILITY TRENCH ANO SURFACE REPAIR PER CITY STANOARO ON SHT. NO. 18, MOOIFIED TO ACCOMMOOATE SLURRY BACKFILL WHERE BOX COVER IS LESS THAN 2.0'.
(21) CONSTRUCT 18" R.C.P, O-LOAD PER PLAN.
(26) CONSTRUCT 6' X 4' RCB PER CALTRANS STO. PLAN NO. 080 OR APPROVED EQUAL.
(29) PROTECT IN PLACE EXISTING UTILITIES.
(30) CONSTRUCT JUNCTION STRUCTURE NO. 1 PER R.C.F.C.&W.C.O. STO. OWG. JS226.
(34) RELOCATE EXISTING WATER LINE PER E.M.W.O. PLANS.
(40) RELOCATE EXISTING ELECTRICAL LINE.
(44) SAWCUT, REMOVE ANO REPLACE A.C. PAVEMENT SURFACE REPAIR PER CITY STD. ON SHEET 18.
(46) SAWCUT, REMOVE ANO REPLACE EXISTING 2'± WIOE CONCRETE GUTTER, LENGTH PER PLAN.
(47) SAWCUT, REMOVE ANO REPLACE EXISTING CONCRETE CURB & GUTTER, LENGTH PER PLAN. SEE SEPARATE PAVING PLANS.
(48) EXISTING POWER POLE TO BE RELOCATED BY OTHERS.
(49) EXISTING FIRE HYORANT TO BE RELOCATED BY OTHERS.

Don't Dig...Until You Call U.S.A. Toll Free
1-800-227-2600
for the location of buried utility lines.
Don't disrupt vital services.
TWO WORKING DAYS BEFORE YOU DIG

BENCH MARK
COUNTY OF RIVERSIDE BENCHMARK NO. "M-31"
COUNTY OF RIVERSIDE BENCHMARK - 3 1/4" ALUMINUM DISK MARKED M-31, LOCATED FLUSH AT THE SOUTH WEST CORNER OF BRIDGE ON TOP OF SIDEWALK NEAR FACE OF CURB LOCATED AT THE CROSSING OF PERRIS BLVD. AND RAY. CO. FLOOD CONTROL CHANNEL (PERRIS LATERAL "A"), 43 FT. WEST OF CENTERLINE OF PERRIS BLVD. AND 4.3 FT. EAST OF CONCRETE BRIDGE BARRIER. (EDGE OF BRIDGE)
MARKED @102 O.N.R. IN TOP OF CONC. POST FLUSH W/ GROUND
ELEVATION = 1474.674' (NAVD 1929)

REF.	DESCRIPTION	ENGINEER APPR.	ENGINEER DATE	RCFC/ APPR.	RCFC/ DATE
	SUPERSEDED BY SHEET 13A	H.I.A.	2/25/14	0.K.	3/27/14

DESIGNED BY: BW
DRAWN BY: ET
DATE DRAWN:

APPROVED BY:
Thienes Engineering, Inc.
CIVIL ENGINEERING • LAND SURVEYING
14349 FIRESTONE BOULEVARD
LA MIRADA, CALIFORNIA 90638
PH.(714)521-4811 FAX(714)521-4173
Haidook I. Aghaian Date: 11/18/14
HAIDOOK I. AGHAIAN RCE NO. 43293

REGISTERED PROFESSIONAL ENGINEER HAIDOOK I. AGHAIAN R.C.E. NO. 43293 Exp. 3-31-16 STATE OF CALIFORNIA CIVIL

KFH 4/16/14

RIVERSIDE COUNTY FLOOD CONTROL AND WATER CONSERVATION DISTRICT
RECOMMENDED FOR APPROVAL BY: DATE: 1/20/2015
APPROVED BY: DATE: 1/20/2015

CITY OF PERRIS
APPROVED BY:
CITY ENGINEER DATE: 12-15-14
RECOMMENDED DATE:

CITY OF PERRIS
FILE NO. P8-1013

PERRIS VALLEY MDP
LINE "A-B"
FROM STA. 54+40 TO STA. 58+36

PROJECT NO. 4-0-00537
DRAWING NO. 4-1063
SHEET NO. 13 OF 18

Last Update: 11/18/14
O:\2700-2799\2702\2702F\2702SD13.dwg

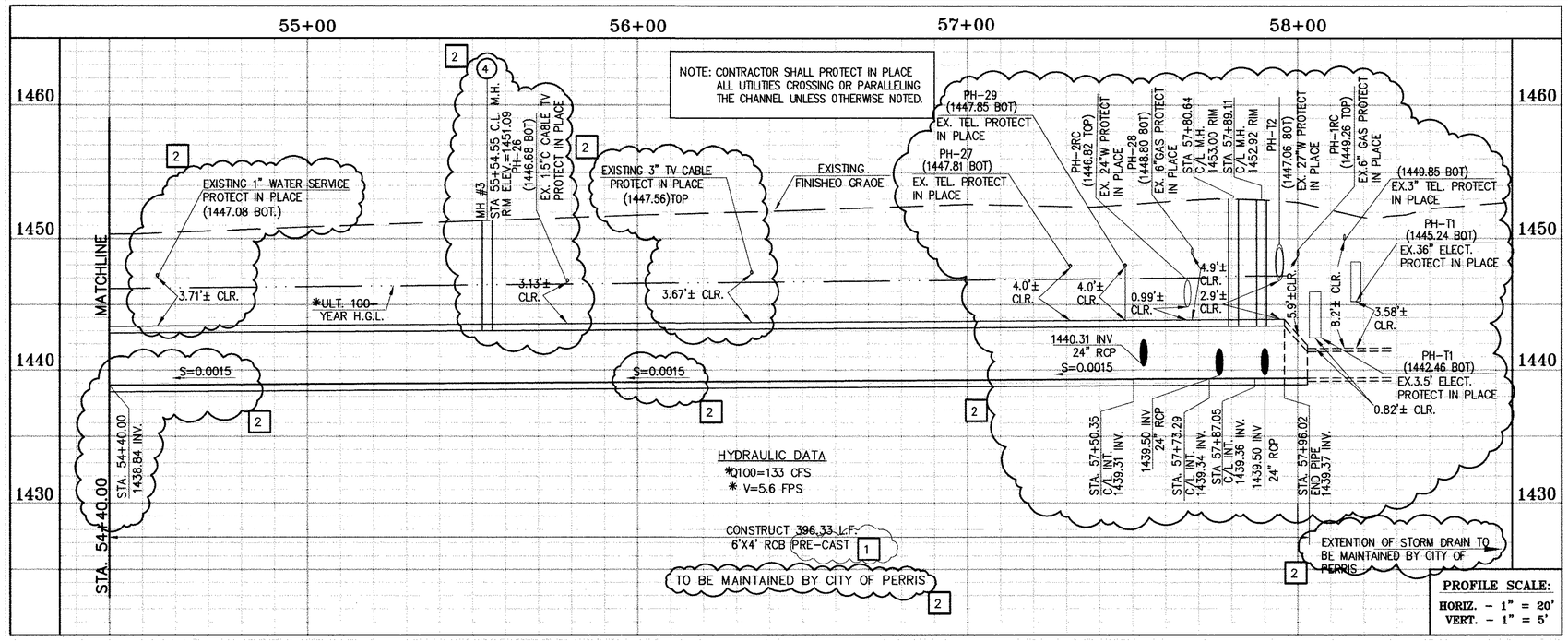

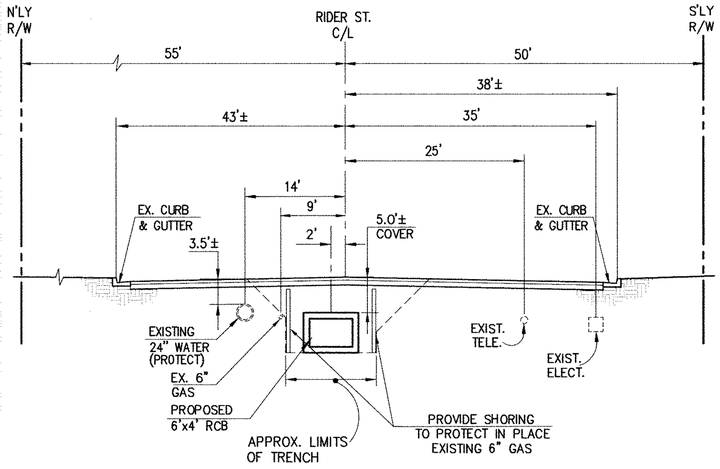

SECTION AT STA. 55+00.00

FROM STA 54+40.00 TO STA 58+36.36

SCALE: 1"=10'

CAUTION:
PROPOSED WORK IS IN PROXIMITY OF HIGH PRESSURE GAS LINES

* THE ULTIMATE H.G.L. IS BASED ON THE ADOPTED MDP WATER SURFACE ELEVATION OF 1433 IN THE PERRIS VALLEY STORM CHANNEL (PVSC) AT RIDER STREET, AND ASSUMES THAT FULL CHANNEL IMPROVEMENTS HAVE BEEN CONSTRUCTED PER THE ADOPTED MDP. FOR ALL WATER SURFACE ELEVATIONS BETWEEN 1433 AND THE 100-YEAR FLOOD ELEVATION FOR PVSC (1437.5), LINE "A-B" WILL NOT HAVE CAPACITY FOR LOCAL 100-YEAR FLOWS.

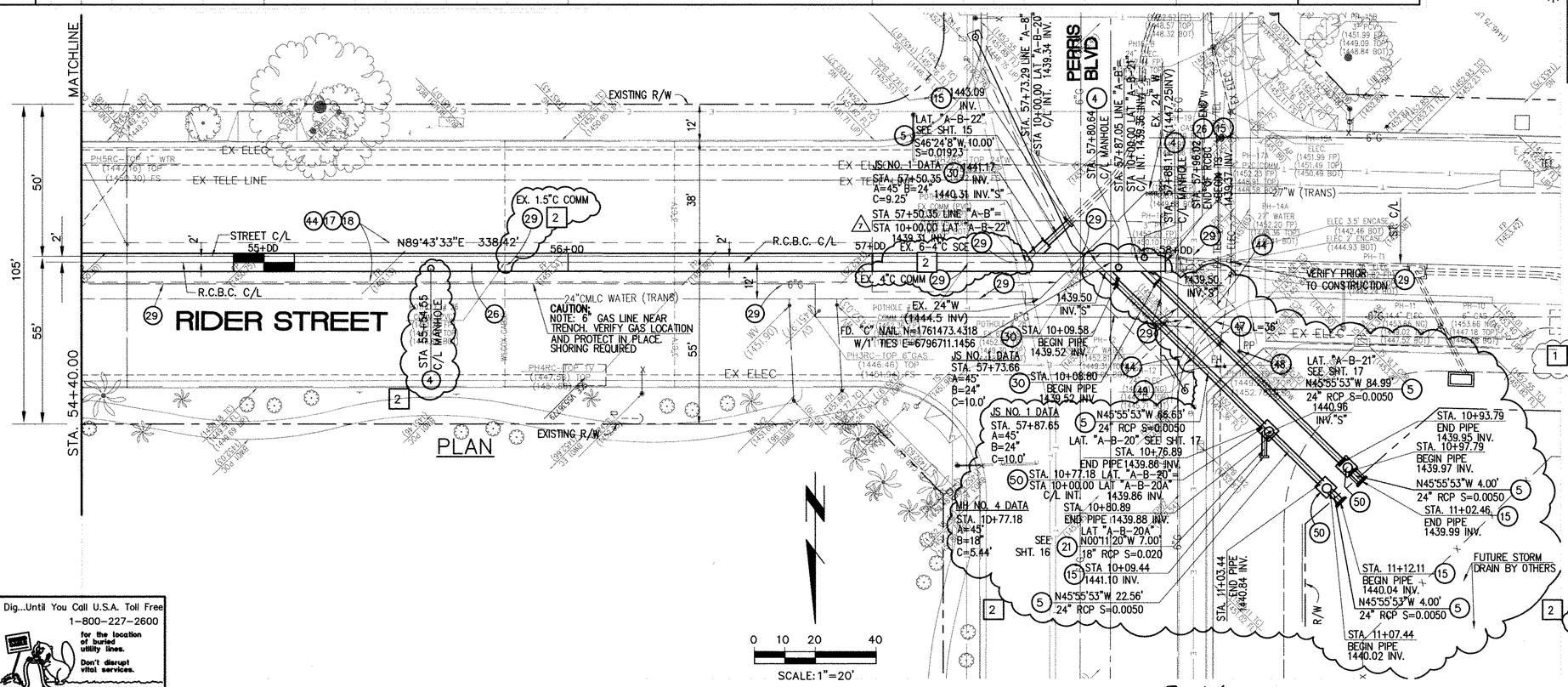

STORM DRAIN CONSTRUCTION NOTES:

- (4) CONSTRUCT MANHOLE #3 PER R.C.F.C.&W.C.D. STD DWG. MH253
- (5) CONSTRUCT 24" R.C.P, D-LOAD PER PLAN.
- (8) CONSTRUCT 42" R.C.P, D-LOAD PER PLAN.
- (12) CONSTRUCT MANHOLE #4 PER R.C.F.C.&W.C.O. STD DWG. MH254
- (15) CONSTRUCT CONCRETE BULKHEAD PER R.C.F.C.&W.C.D. STD DWG. M816.
- (17) SAWCUT AND REMOVE EXISTING A.C. PAVEMENT.
- (18) UTILITY TRENCH AND SURFACE REPAIR PER CITY STANDARD ON SHT. NO. 18, MODIFIED TO ACCOMMODATE SLURRY BACKFILL WHERE BOX COVER IS LESS THAN 2.0'.
- (21) CONSTRUCT 18" R.C.P, D-LOAD PER PLAN.
- (1) (26) CONSTRUCT 6' X 4' PRE-CAST RCB APWA STD PLAN 390-0 OR APPROVED EQUAL. SEE JOINT SEALANT NOTE ON SHEET #1.
- (29) PROTECT IN PLACE EXISTING UTILITIES.
- (30) CONSTRUCT JUNCTION STRUCTURE NO. 1 PER R.C.F.C.&W.C.D. STD. DWG. JS226.
- (34) RELOCATE EXISTING WATER LINE PER E.M.W.D. PLANS.
- (40) RELOCATE EXISTING ELECTRICAL LINE.
- (44) SAWCUT, REMOVE AND REPLACE A.C. PAVEMENT SURFACE REPAIR PER CITY STD. ON SHEET 18.
- (46) SAWCUT, REMOVE AND REPLACE EXISTING 2'± WIDE CONCRETE GUTTER, LENGTH PER PLAN.
- (47) SAWCUT, REMOVE AND REPLACE EXISTING CONCRETE CURB & GUTTER, LENGTH PER PLAN. SEE SEPARATE PAVING PLANS.
- (48) EXISTING POWER POLE TO BE RELOCATED BY OTHERS.
- (49) EXISTING FIRE HYDRANT TO BE RELOCATED BY OTHERS.
- (2) (50) CONSTRUCT MANHOLE #1 PER R.C.F.C.&W.C.D. STD DWG. MH251

Don't Dig...Until You Call U.S.A. Toll Free 1-800-227-2600 for the location of buried utility lines. Don't disrupt vital services.
TWO WORKING DAYS BEFORE YOU DIG

BENCH MARK
COUNTY OF RIVERSIDE BENCHMARK NO. "M-31"
COUNTY OF RIVERSIDE BENCHMARK - 3 1/4" ALUMINUM DISK MARKED M-31, LOCATED FLUSH AT THE SOUTH WEST CORNER OF BRIDGE ON TOP OF SIDEWALK NEAR FACE OF CURB LOCATED AT THE CROSSING OF PERRIS BLVD. AND RIV. CO. FLOOD CONTROL CHANNEL (PERRIS LATERAL "A") 43 FT. WEST OF CENTERLINE OF PERRIS BLVD. AND 4.5 FT. EAST OF CONCRETE BRIDGE BARRIER, (EDGE OF BRIDGE) MARKED R-102 D.M.R. IN TOP OF CONC. POST FLUSH W/ GROUND
ELEVATION = 1474.674' (NAVD 1928)

REF.	DESCRIPTION	ENGINEER APPR.	ENGINEER DATE	RCFC/ APPR.	RCFC/ DATE
2	CHANGED SLOPE TO 0.0015, ADDED MH, ADDED NEW 10"S, CHANGED 42" LAT TO 24" LAT. ADDED EX. UTILITIES, RELOCATE UTILITIES, REVISED SD	H.L.A.	2/29/16	CK	3/07/16
1	CHANGED CAST IN PLACE RCB TO PRE-CAST RCB PER APWA 390-0	H.L.A.	2/29/16	CK	3/07/16

DESIGNED BY:
DRAWN BY:
DATE DRAWN:

APPROVED BY:
Thienes Engineering, Inc.
CIVIL ENGINEERING • LAND SURVEYING
14349 FIRESTONE BOULEVARD
LA MIRADA, CALIFORNIA 90638
PH.(714)521-4811 FAX(714)521-4173
HAIDOOK I. AGHAIAN Date: 2/1/16
RCE NO. 43293

REGISTERED PROFESSIONAL ENGINEER HAIDOOK I. AGHAIAN R.C.E. NO. 43293 Exp. 3-31-16 CIVIL STATE OF CALIFORNIA

KH 2/17/16

RIVERSIDE COUNTY FLOOD CONTROL AND WATER CONSERVATION DISTRICT
RECOMMENDED FOR APPROVAL BY: DATE:
APPROVED BY: DATE:

CITY OF PERRIS
APPROVED BY:
CITY ENGINEER DATE: 2-9-16
RECOMMENDED DATE:

PERRIS VALLEY MDP LINE "A-B"

FROM STA. 54+40 TO STA. 58+36

CITY OF PERRIS FILE NO. P8-1013
PROJECT NO. 4-0-00537
DRAWING NO. 4-1063
SHEET NO. 13A OF 18

Last Update:1/29/16
O:\2700-2799\2702\2702F\2702SD13.dwg

CAUTION:
PROPOSED WORK IS IN PROXIMITY OF HIGH PRESSURE GAS LINES

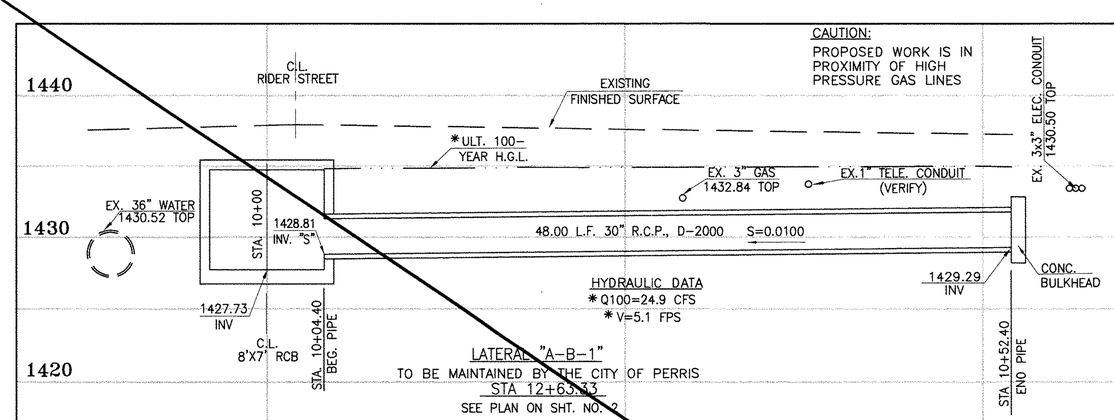

HYDRAULIC DATA
* Q100=24.9 CFS
* V=5.1 FPS

LATERAL "A-B-1"
TO BE MAINTAINED BY THE CITY OF PERRIS
STA 12+63.33
SEE PLAN ON SHT. NO. 2

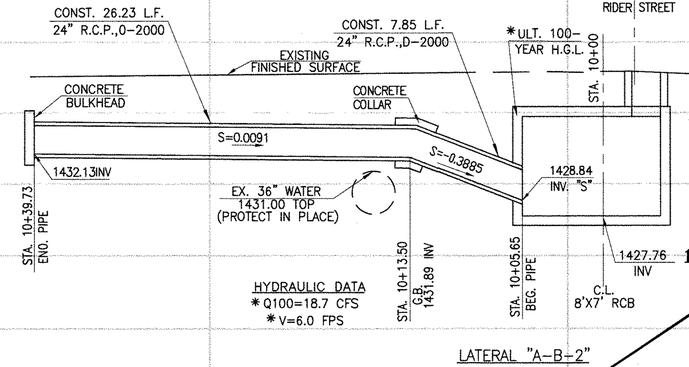

HYDRAULIC DATA
* Q100=18.7 CFS
* V=6.0 FPS

LATERAL "A-B-2"
TO BE MAINTAINED BY THE CITY OF PERRIS
STA 12+75.33
SEE PLAN ON SHT. NO. 2

NOTE:
CONTRACTOR SHALL PROTECT IN PLACE ALL UTILITIES CROSSING OR PARALLELING THE STORM DRAIN UNLESS OTHERWISE NOTED.

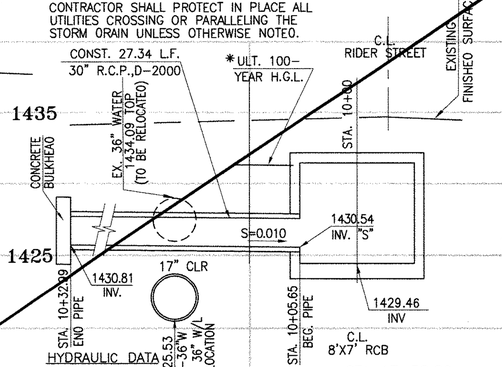

HYDRAULIC DATA
* Q100=24.8 CFS
* V=5.1 FPS

STA 17+58.82
SEE PLAN ON SHT. NO. 3

LATERAL "A-B-3"
TO BE MAINTAINED BY THE CITY OF PERRIS

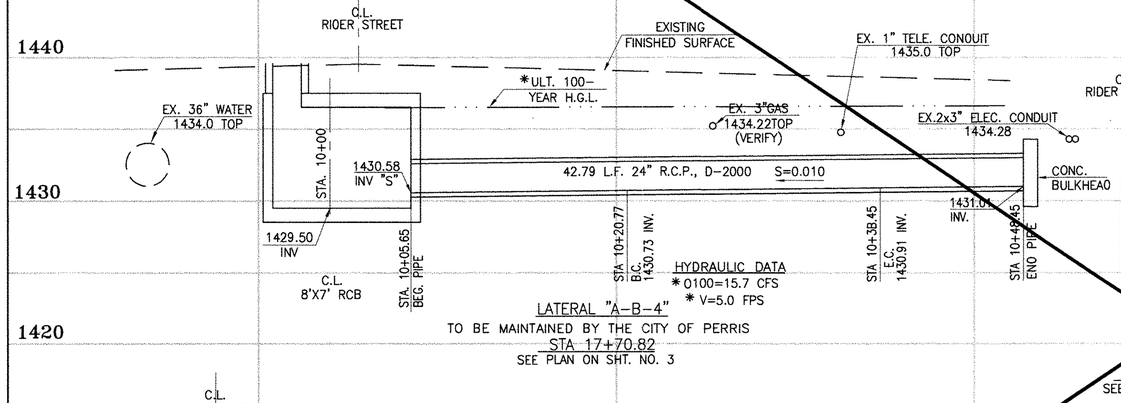

HYDRAULIC DATA
* Q100=15.7 CFS
* V=5.0 FPS

LATERAL "A-B-4"
TO BE MAINTAINED BY THE CITY OF PERRIS
STA 17+70.82
SEE PLAN ON SHT. NO. 3

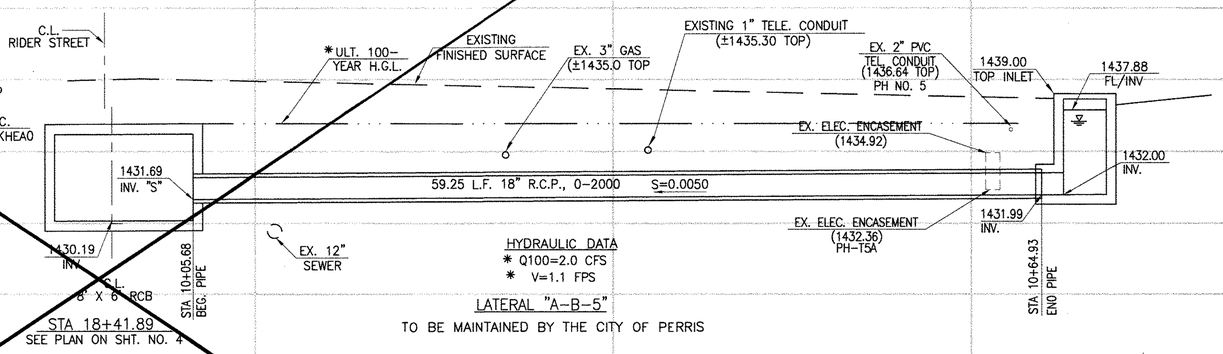

HYDRAULIC DATA
* Q100=2.0 CFS
* V=1.1 FPS

LATERAL "A-B-5"
TO BE MAINTAINED BY THE CITY OF PERRIS

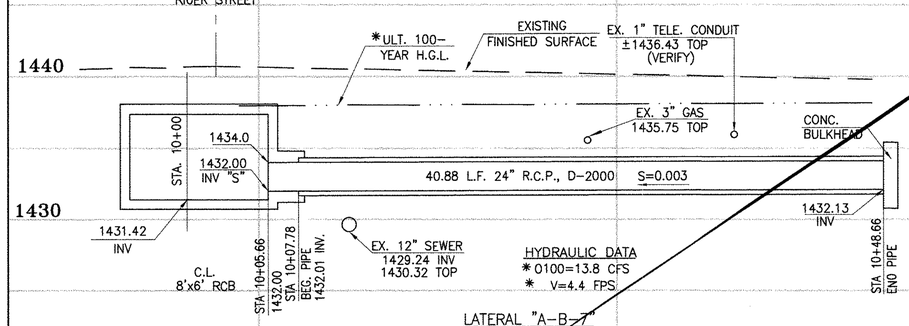

HYDRAULIC DATA
* Q100=13.8 CFS
* V=4.4 FPS

LATERAL "A-B-7"
TO BE MAINTAINED BY THE CITY OF PERRIS
STA 22+49.41
SEE PLAN ON SHT. NO. 5

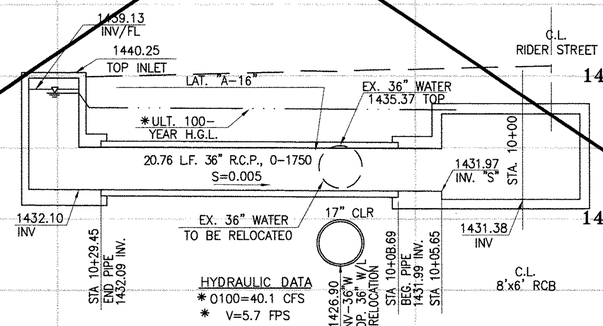

HYDRAULIC DATA
* Q100=40.1 CFS
* V=5.7 FPS

LATERAL "A-B-6"
TO BE MAINTAINED BY THE CITY OF PERRIS
STA 22+36.21
SEE PLAN ON SHT. NO. 5

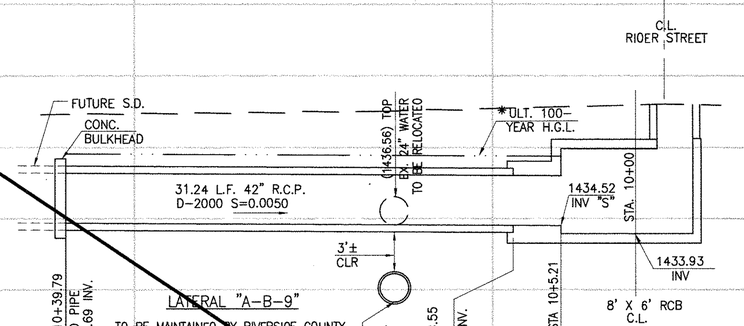

LATERAL "A-B-9"
TO BE MAINTAINED BY RIVERSIDE COUNTY FLOOD CONTROL AND WATER CONSERVATION DISTRICT

STA 30+85.05
SEE PLAN ON SHT. NO. 7

HYDRAULIC DATA
* Q100=72.0 CFS
* V=7.5 FPS

PROFILE SCALE:
HORIZ. - 1" = 5'
VERT. - 1" = 5'

CAUTION:
PROPOSED WORK IS IN PROXIMITY OF HIGH PRESSURE GAS LINES

* THE ULTIMATE H.G.L. IS BASED ON THE ADOPTED MDP WATER SURFACE ELEVATION OF 1433 IN THE PERRIS VALLEY STORM CHANNEL (PVSC) AT RIDER STREET, AND ASSUMES THAT FULL CHANNEL IMPROVEMENTS HAVE BEEN CONSTRUCTED PER THE ADOPTED MDP. FOR ALL WATER SURFACE ELEVATIONS BETWEEN 1433 AND THE 100-YEAR FLOOD ELEVATION FOR PVSC (1437.5), LINE "A-B" WILL NOT HAVE CAPACITY FOR LOCAL 100-YEAR FLOWS.

Don't Dig...Until You Call U.S.A. Toll Free
1-800-227-2600
for the location of buried utility lines.
Don't disrupt vital services.
TWO WORKING DAYS BEFORE YOU DIG

BENCH MARK
COUNTY OF RIVERSIDE BENCHMARK NO. 24-31
COUNTY OF RIVERSIDE BENCHMARK, 3" 1/4" ALUMINUM DISK MARKED R-31, LOCATED FLUSH AT THE SOUTH WEST CORNER OF BRIDGE ON TOP OF SIDEWALK NEAR FACE OF CURB LOCATED AT THE CROSSING OF PERRIS BLVD. AND RIV. CO. FLOOD CONTROL CHANNEL (PERRIS LATERAL "A"), 4.5 FT. WEST OF CENTERLINE OF PERRIS BLVD. AND 4.5 FT. EAST OF CONCRETE SINGLE BARRIER (EDGE OF BRIDGE) MARKED B 102 D.M.R. IN TOP OF CONC. POST FLUSH W/ GROUND
ELEVATION = 1474.674' (NAVD 1929)

REF.	DESCRIPTION	APPR.	DATE	APPR.	DATE
	SUPERSEDED BY SHEET 14A	HA	2/25/16	DK	2/25/16

DESIGNED BY: BW
DRAWN BY: ET
DATE DRAWN:

APPROVED BY:
Thienes Engineering, Inc.
CIVIL ENGINEERING • LAND SURVEYING
14349 FIRESTONE BOULEVARD
LA MIRADA, CALIFORNIA 90638
PH.(714)521-4811 FAX(714)521-4173
HAIDOOK I. AGHAIAN Date: 11/18/14
RCE NO. 43293

REGISTERED PROFESSIONAL ENGINEER HAIDOOK I. AGHAIAN R.C.E. NO. 43293 Exp. 3-31-16 CIVIL STATE OF CALIFORNIA

KRH 4/10/14

RIVERSIDE COUNTY FLOOD CONTROL AND WATER CONSERVATION DISTRICT
RECOMMENDED FOR APPROVAL BY:
DATE: 1/14/2015
APPROVED BY:
DATE: 1/20/2015

CITY OF PERRIS
APPROVED BY:
CITY ENGINEER DATE: 12-15-14
RECOMMENDED DATE:

PERRIS VALLEY MDP LINE "A-B"

CITY OF PERRIS
FILE NO. P8-1013
PROJECT NO. 4-0-00537
DRAWING NO. 4-1063
SHEET NO. 14 OF 18

Last Update: 11/18/14
O:\2700-2799\2702\2702F\2702SD14.dwg

CAUTION:
PROPOSED WORK IS IN PROXIMITY OF HIGH PRESSURE GAS LINES

C.L. RIDER STREET
EXISTING FINISHED SURFACE
*ULT. 100-YEAR H.G.L.
EX. 3" GAS 1432.84 TOP
EX.1" TELE. CONDUIT (VERIFY)
EX. 3x3" ELEC. CONDUIT 1430.50 TOP
STA. 10+00
1428.81 INV. "S"
48.00 L.F. 30" R.C.P., 0-2000 S=0.0100
1429.29 INV
CONC. BULKHEAD
1427.73 INV
STA. 10+04.40 BEG. PIPE
STA 10+52.40 END PIPE
EX. 36" WATER 1430.52 TOP
C.L. 8'X7' RCB
HYDRAULIC DATA
*Q100=24.9 CFS
*V=5.1 FPS
LATERAL "A-B-1"
TO BE MAINTAINED BY THE CITY OF PERRIS
STA 12+63.33
SEE PLAN ON SHT. NO. 2

CONST. 26.23 L.F. 24" R.C.P.,0-2000
2
CONST. 7.85 L.F. 24" R.C.P.,D-2000
EXISTING FINISHED SURFACE
CONCRETE BULKHEAD
CONST. COF PER EMWD SPECS.
CONCRETE COLLAR
S=0.0050
S=-0.436
1432.39INV
1432.27 INV-24"
PH-1 EX. 36" WATER 1431.47 TOP
STA. 10+39.73 END. PIPE
STA. 10+13.80 G.B. 1432.26 INV
STA. 10+05.85 BEG. PIPE
1428.84 INV. "S"
1427.76 INV
C.L. 8'X7' RCB
HYDRAULIC DATA
*Q100=18.7 CFS
*V=6.0 FPS
LATERAL "A-B-2"
TO BE MAINTAINED BY THE CITY OF PERRIS
STA 12+75.33
SEE PLAN ON SHT. NO. 2

NOTE:
CONTRACTOR SHALL PROTECT IN PLACE ALL UTILITIES CROSSING OR PARALLELING THE STORM DRAIN UNLESS OTHERWISE NOTED.
C.L. RIDER STREET
EXISTING FINISHED SURFACE
CONST. 2 L.F. 30" R.C.P.,0-2000
*ULT. 100-YEAR H.G.L.
STA. 10+00
EX. 36" WATER 1434.09 TOP (TO BE RELOCATED BY OTHERS)
CONCRETE BULKHEAD
2"
S=0.010
1430.54 INV. "S"
17" CLR
1430.81 INV.
STA. 10+32.99 END PIPE
1429.53 INV- 36" W/ FUT. 36" W/ RELOCATION
STA. 10+05.65 BEG. PIPE
1429.46 INV
C.L. 8'X7' RCB
HYDRAULIC DATA
*Q100=24.8 CFS
*V=5.1 FPS
FUT. LATERAL BY OTHERS
STA 17+58.82
SEE PLAN ON SHT. NO. 3
LATERAL "A-B-3"
TO BE MAINTAINED BY THE CITY OF PERRIS

PROTECT IN PLACE EXISTING UTILITY LINE. FIELD VERIFY INVERT ELEVATIONS INFORM ENGINEER FOR ANY ELEVATION DISCREPANCIES PRIOR TO CONSTRUCTION

C.L. RIDER STREET
PH-2 EX. ELECT. 1433.66 BOT
EXISTING SURFACE
PH-3 EX. 1" TELE. CONDUIT 1432.07 BOT PROTECT IN PLACE
ULT. 100-YEAR H.G.L.*
EX. 3" GAS 1434.22 TOP (VERIFY)
PH-4 EX. 2x3" ELECT. 1432.07 BOT
1.9'± CLR.
2.19'± CLR.
3.07'± CLR.
0.24'± CLR.
STA. 10+00
1430.00 INV "S"
S=0.003
42.79 L.F. 18" R.C.P., 0-2000
S=0.003
1429.78 INV
CONC. BULKHEAD
EX. 36" WATER 1434.0 TOP
C.L. TS NO.2
STA. 10+05.66 BEG. PIPE
STA 10+20.77 B.C. 1430.05 INV.
STA 10+38.45 E.C. 1430.10 INV.
STA 10+48.45 END PIPE 1430.13 INV.
HYDRAULIC DATA
*Q100=15.7 CFS
*V=8.9 FPS
LATERAL "A-B-4"
TO BE MAINTAINED BY THE CITY OF PERRIS
STA 17+70.82
SEE PLAN ON SHT. NO. 3

*ULT. 100-YEAR H.G.L.
EXISTING FINISHED SURFACE
EX. 3" GAS (+1435.0 TOP
EXISTING 1" TELE. CONDUIT (±1435.30 TOP)
2
RELOCATE EX. 2" TEL (1436.64 TOP)
13.59 L.F. 18" R.C.P. 0-2000
PH-5 RELOCATE EX. 2" TEL (1436.34 TOP)
1439.00 TOP INLET
4.31 L.F. 18" R.C.P., 0-2000
S=0.0050
1437.88 FL/INV
1.0'± CLR.
1.5'± CLR.
1.0'± CLR.
1436.29 INV.
1431.69 INV. "S"
41.35 L.F. 18" R.C.P., 0-2000 S=0.0050
1.5'± CLR.
EX. 12" SEWER
1430.19 INV
C.L. 8' X 6' RCB
HYDRAULIC DATA
*Q100=2.0 CFS
*V=1.1 FPS
STA 18+41.88
SEE PLAN ON SHT. NO. 4
LATERAL "A-B-5"
TO BE MAINTAINED BY THE CITY OF PERRIS
STA 10+47.03 G.B. 1431.90 INV. CONC. COLLAR
STA 10+51.34 G.B. 1436.21 INV. CONC. COLLAR
2" TEL. NEW LOCATION 1434.09 TOP
PH-5A EX. ELECT. ENCASEMENT
2" TEL. NEW LOCATION 1435.00 TOP
STA 10+64.93 END PIPE 1436.28 INV.
STA 10+41.89
SEE PLAN ON SHT. NO. 4

C.L. RIDER STREET
*ULT. 100-YEAR H.G.L.
EXISTING FINISHED SURFACE
EX. 1" TELE. CONDUIT ±1436.43 TOP (VERIFY)
PH-9 (1436.35TOP) EX. 2"C COMM
2
CONC. BULKHEAD
EX. 3" GAS 1435.75 TOP
STA. 10+00
1434.0
1432.00 INV "S"
40.88 L.F. 24" R.C.P., 0-2000 S=0.003
1431.42 INV
1432.13 INV
STA 10+48.66 END PIPE
C.L. 8'x6' RCB
STA. 10+05.66 BEG. PIPE
1431.00 STA 10+07.78 BEG. PIPE 1432.01 INV.
EX. 12" SEWER 1429.24 INV 1430.32 TOP
HYDRAULIC DATA
*Q100=13.8 CFS
*V=4.4 FPS
LATERAL "A-B-7"
TO BE MAINTAINED BY THE CITY OF PERRIS
STA 22+49.41
SEE PLAN ON SHT. NO. 5

1439.13 INV/FL
1440.25 TOP INLET
CONC. BULKHEAD
LAT. "A-16"
EX. 36" WATER 1435.37 TOP
C.L. RIDER STREET
*ULT. 100-YEAR H.G.L.
20.76 L.F. 36" R.C.P., 0-1750 S=0.005
17" CLR
1431.97 INV. "S"
STA. 10+00
EX. 36" WATER TO BE RELOCATED BY OTHERS
1432.10 INV
STA 10+29.45 END PIPE 1432.09 INV.
FUT. LATERAL BY OTHERS
1426.90 INV-36" W/ FUT. 36" W/ RELOCATION
STA 10+08.69 BEG. PIPE 1431.99 INV.
STA 10+05.65
1431.38 INV
C.L. 8'x6' RCB
HYDRAULIC DATA
*Q100=40.1 CFS
*V=5.7 FPS
LATERAL "A-B-6"
TO BE MAINTAINED BY THE CITY OF PERRIS
STA 22+36.21
SEE PLAN ON SHT. NO. 5

PH-15 (1439.57) EX. 2-2"C
2
PH-14 PROTECT IN PLACE (1437.75 TOP) (1435.59 BOT)
C.L. RIDER STREET
*ULT. 100-YEAR H.G.L.
S=0.0040
6"± CLR
31.24 L.F. 2-24" R.C.P. 0-2000
CONST. COF PER EMWD SPECS.
1.6'± CLR
S=-0.537
1434.52 INV "S"
STA. 10+00
STA 10+37.42 CONC. BULKHEAD 1438.50 INV.
STA 10+12.43 G.B. CONC. COLLAR 1438.40 INV.
STA 10+08.55 BEGIN PIPE 1436.32 INV.
STA 10+05.21
1433.93 INV
C.L. TS NO.2
(1436.56') TOP EX. 24" WATER
HYDRAULIC DATA
* Q100=36.0 CFS/PIPE
* V=11.5 FPS
LATERAL "A-B-9"
TO BE MAINTAINED BY CITY OF PERRIS
STA 30+85.05
SEE PLAN ON SHT. NO. 7

PROFILE SCALE:
HORIZ. - 1" = 5'
VERT. - 1" = 5'

Don't Dig...Until You Call U.S.A. Toll Free 1-800-227-2600
for the location of buried utility lines.
Don't disrupt vital services.
TWO WORKING DAYS BEFORE YOU DIG

CAUTION:
PROPOSED WORK IS IN PROXIMITY OF HIGH PRESSURE GAS LINES

* THE ULTIMATE H.G.L. IS BASED ON THE AOOPTEO MOP WATER SURFACE ELEVATION OF 1433 IN THE PERRIS VALLEY STORM CHANNEL (PVSC) AT RIDER STREET, ANO ASSUMES THAT FULL CHANNEL IMPROVEMENTS HAVE BEEN CONSTRUCTEO PER THE AOOPTED MDP. FOR ALL WATER SURFACE ELEVATIONS BETWEEN 1433 ANO THE 100-YEAR FLOOO ELEVATION FOR PVSC (1437.5), LINE "A-B" WILL NOT HAVE CAPACITY FOR LOCAL 100-YEAR FLOWS.

BENCH MARK
COUNTY OF RIVERSIDE BENCHMARK NO. "H-31"
COUNTY OF RIVERSIDE BENCHMARK - 3 1/4" ALUMINUM DISK MARKED H-31, LOCATED FLUSH AT THE SOUTH WEST CORNER OF BRIDGE ON TOP OF SIDEWALK NEAR FACE OF CURB LOCATED AT THE CROSSING OF PERRIS BLVD. AND INV. CO. FLOOD CONTROL CHANNEL (PERRIS LATERAL "A"), 43 FT. WEST OF CENTERLINE OF PERRIS BLVD. AND 4.5 FT. EAST OF CONCRETE BRIDGE BARRIER. (EDGE OF BRIDGE) MARKED R-102 D.W.R. IN TOP OF CONC. POST FLUSH W/ GROUND
ELEVATION = 1474.674' (NAVD 1929)

REF.	DESCRIPTION	ENGINEER APPR.	ENGINEER DATE	RCFC/ APPR.	RCFC/ DATE
2	CHANGED SLOPE TO 0.0015, ADDED MH, ADDED NEW 10"S, CHANGED 42" LAT TO 24" LAT ADDED EX. UTILITIES, RELOCATE UTILITIES, REVISED SD	H.I.A.	2/25/16	DK	2/25/16
1	CHANGED CAST IN PLACE RCB TO PRE-CAST RCB PER APWA 380-0	H.I.A.	2/23/16	DK	2/25/16

DESIGNED BY:
DRAWN BY:
DATE DRAWN:

APPROVED BY:
Thienes Engineering, Inc.
CIVIL ENGINEERING • LAND SURVEYING
14349 FIRESTONE BOULEVARD
LA MIRADA, CALIFORNIA 90638
PH.(714)521-4811 FAX(714)521-4173
HAIDOOK I. AGHAPAN Date: 2/1/16 RCE NO. 43293

REGISTERED PROFESSIONAL ENGINEER HAIDOOK I. AGHAPAN R.C.E. NO. 43293 Exp. 3-31-16 CIVIL STATE OF CALIFORNIA

KH 2/17/16
RIVERSIDE COUNTY FLOOD CONTROL AND WATER CONSERVATION DISTRICT
RECOMMENDED FOR APPROVAL BY: DATE:
APPROVED BY: DATE:

CITY OF PERRIS
APPROVED BY:
CITY ENGINEER 2-9-16 DATE:
RECOMMENDED DATE:

PERRIS VALLEY MDP LINE "A-B"

CITY OF PERRIS
FILE NO. P8-1013
PROJECT NO. 4-0-00537
DRAWING NO. 4-1063
SHEET NO. 14A OF 18

Last Update:1/29/16
O:\2700-2799\2702\2702F\2702SD14.dwg

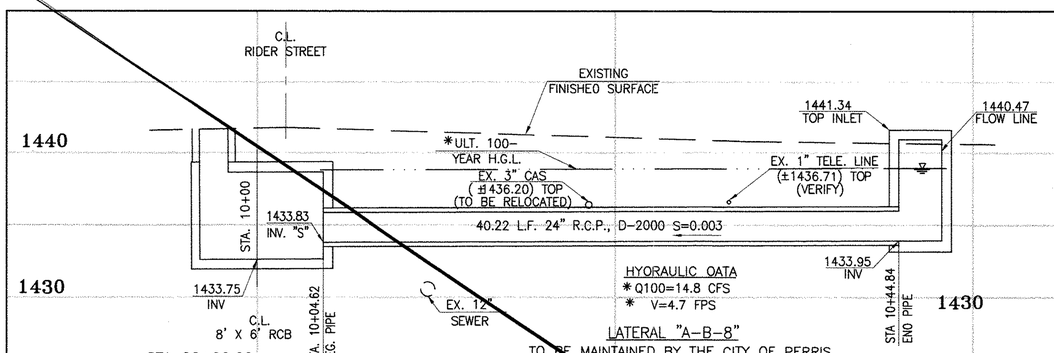

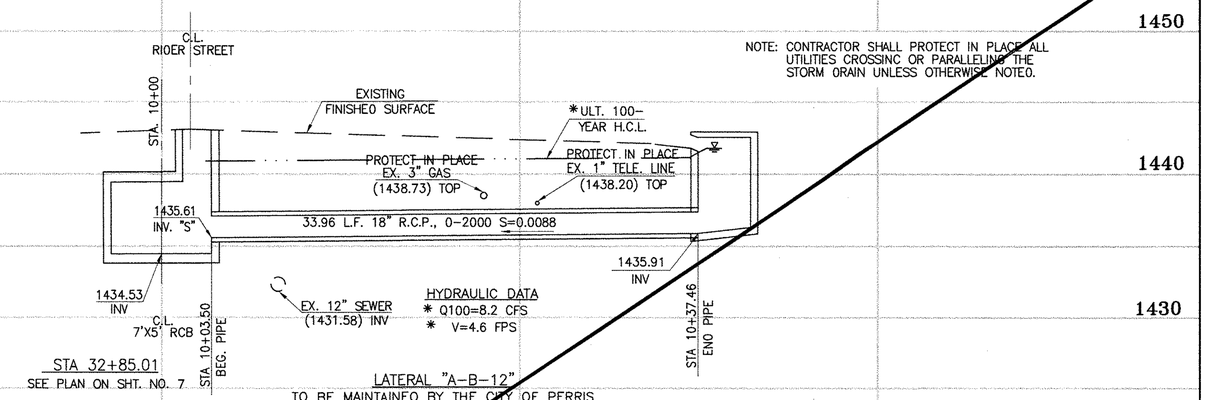

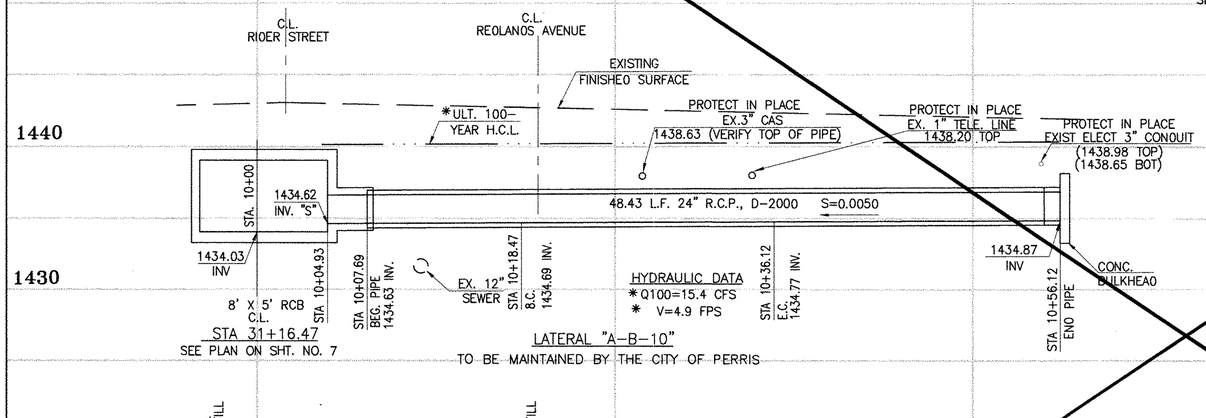

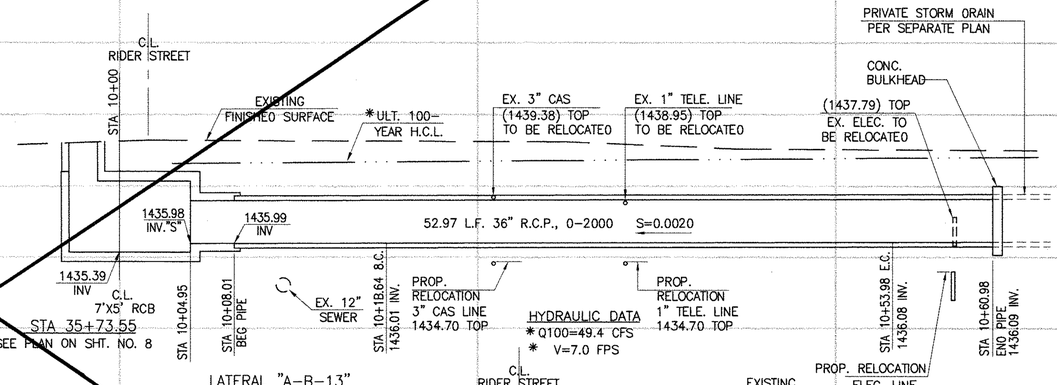

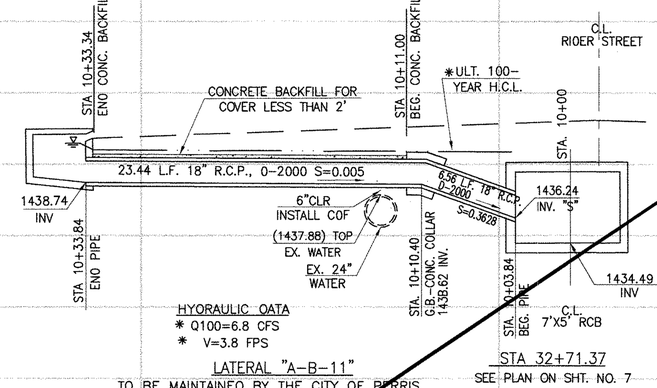

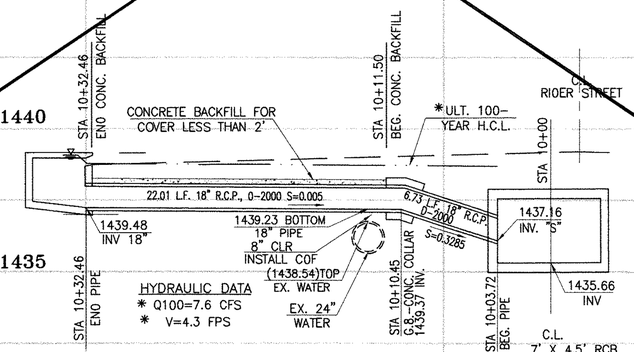

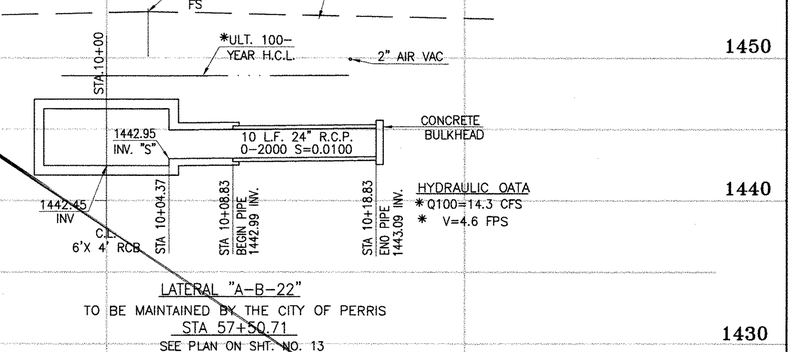

PROFILE SCALE:
HORIZ. - 1" = 5'
VERT. - 1" = 5'

Don't Dig...Until You Call U.S.A. Toll Free
1-800-227-2600
for the location of buried utility lines.
Don't disrupt vital services.
TWO WORKING DAYS BEFORE YOU DIG

CAUTION:
PROPOSED WORK IS IN PROXIMITY OF HIGH PRESSURE GAS LINES

* THE ULTIMATE H.C.L. IS BASEO ON THE AOOPTEO MOP WATER SURFACE ELEVATION OF 1433 IN THE PERRIS VALLEY STORM CHANNEL (PVSC) AT RIOER STREET, ANO ASSUMES THAT FULL CHANNEL IMPROVEMENTS HAVE BEEN CONSTRUCTEO PER THE AOOPTEO MOP. FOR ALL WATER SURFACE ELEVATIONS BETWEEN 1433 ANO THE 100-YEAR FLOOO ELEVATION FOR PVSC (1437.5), LINE "A-B" WILL NOT HAVE CAPACITY FOR LOCAL 100-YEAR FLOWS.

BENCH MARK
COUNTY OF RIVERSIDE BENCHMARK NO. "H-31"
COUNTY OF RIVERSIDE BENCHMARK - 3 1/4" ALUMINUM DISK MARKED H-31, LOCATED FLUSH AT THE SOUTH WEST CORNER OF BRIDGE ON TOP OF SIDEWALK NEAR FACE OF CURB LOCATED AT THE CROSSING OF PERRIS BLVD. AND RIV. CO. FLOOD CONTROL CHANNEL (PERRIS LATERAL "A"), 43 FT. WEST OF CENTERLINE OF PERRIS BLVD. AND 4.5 FT. EAST OF CONCRETE BRIDGE BARRIER. (EDGE OF BRIDGE) MARKED 2702 D.W.R. IN TOP OF CONC. POST FLUSH W/ GROUND
ELEVATION = 1474.674' (NAVD 1929)

REF.	DESCRIPTION	APPR.	DATE	APPR.	DATE
	REVISIONS	ENGINEER		RCFC/	
	SUPERSEDED BY SHEET 15A	H.I.A.	2/25/14	RTA	3/5/14

DESIGNED BY: BW
DRAWN BY: ET
DATE DRAWN:

APPROVED BY:
Thienes Engineering, Inc.
CIVIL ENGINEERING • LAND SURVEYING
14349 FIRESTONE BOULEVARD
LA MIRADA, CALIFORNIA 90638
PH.(714)521-4811 FAX(714)521-4173
HAIDOOK I. AGHAIAN Date: 11/18/14
RCE NO. 43293

REGISTERED PROFESSIONAL ENGINEER HAIDOOK I. AGHAIAN R.C.E. NO. 43293 Exp. 3-31-16 CIVIL STATE OF CALIFORNIA

KFH 4/10/14

RIVERSIDE COUNTY FLOOD CONTROL AND WATER CONSERVATION DISTRICT
RECOMMENDED FOR APPROVAL BY: DATE: 11/20/2015
APPROVED BY: Mark H. Wills DATE: 1/20/2015

CITY OF PERRIS
APPROVED BY:
CITY ENGINEER 12-15-14 DATE:
RECOMMENDED DATE:

PERRIS VALLEY MDP
LINE "A-B"

CITY OF PERRIS
FILE NO. P8-1013
PROJECT NO. 4-0-00537
DRAWING NO. 4-1063
SHEET NO. 15 OF 18

Last Update: 11/18/14
O:\2700-2799\2702\2702F\2702SD15.dwg

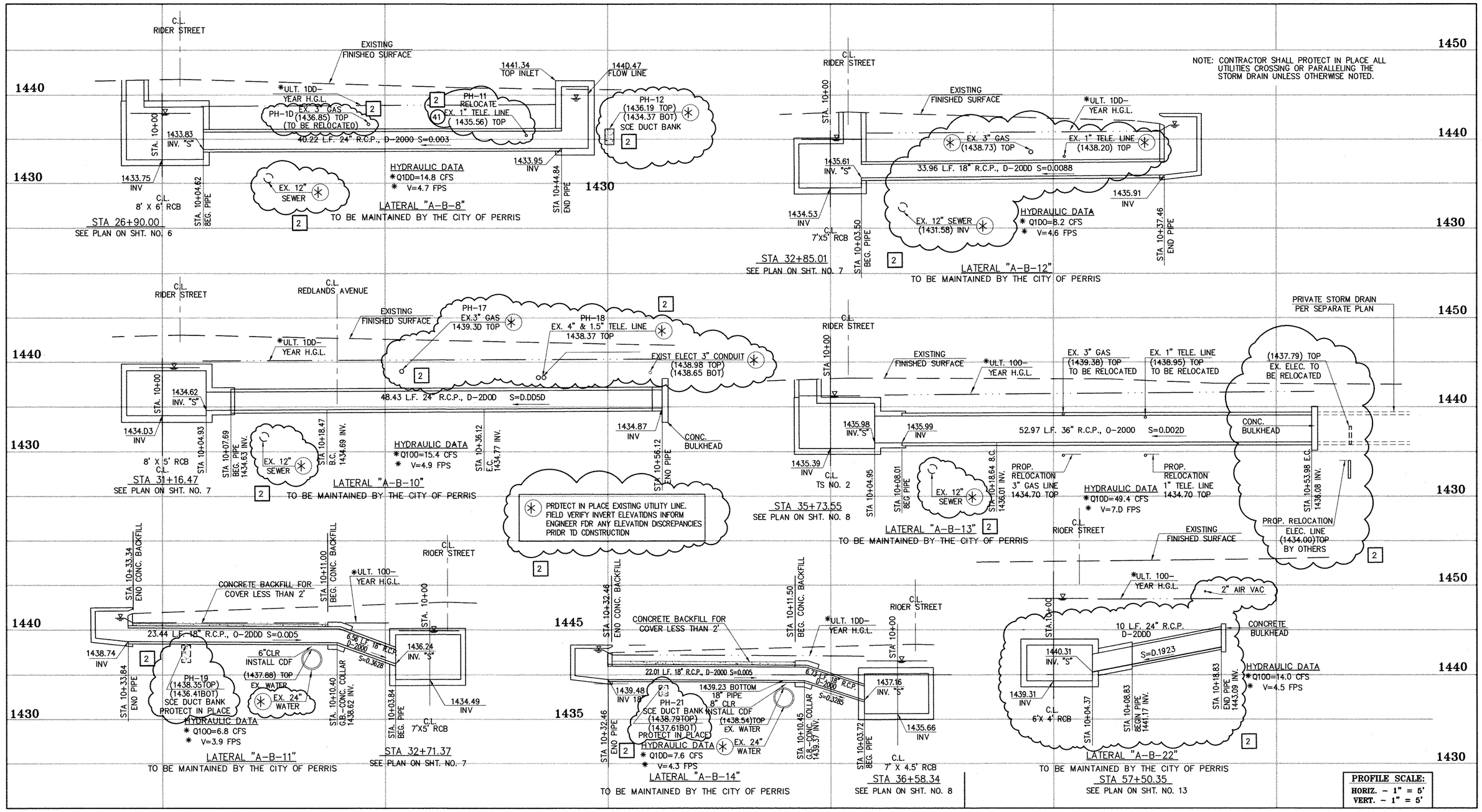

PROFILE SCALE:
HORIZ. - 1" = 5'
VERT. - 1" = 5'

Don't Dig...Until You Call U.S.A. Toll Free 1-800-227-2600
for the location of buried utility lines.
Don't disrupt vital services.
TWO WORKING DAYS BEFORE YOU DIG

CAUTION:
PROPOSED WORK IS IN PROXIMITY OF HIGH PRESSURE GAS LINES

* THE ULTIMATE H.G.L. IS BASED ON THE ADOPTED MDP WATER SURFACE ELEVATION OF 1433 IN THE PERRIS VALLEY STORM CHANNEL (PVSC) AT RIDER STREET, AND ASSUMES THAT FULL CHANNEL IMPROVEMENTS HAVE BEEN CONSTRUCTED PER THE ADOPTED MDP. FOR ALL WATER SURFACE ELEVATIONS BETWEEN 1433 AND THE 100-YEAR FLOOD ELEVATION FOR PVSC (1437.5), LINE "A-B" WILL NOT HAVE CAPACITY FOR LOCAL 100-YEAR FLOWS.

BENCH MARK
COUNTY OF RIVERSIDE BENCHMARK NO. "M-31"
COUNTY OF RIVERSIDE BENCHMARK - 3 1/4" ALUMINUM DISK MARKED M-31, LOCATED FLUSH AT THE SOUTH WEST CORNER OF BRIDGE ON TOP OF SIDEWALK NEAR FACE OF CURB LOCATED AT THE CROSSING OF PERRIS BLVD. AND RTV. CO. FLOOD CONTROL CHANNEL (PERRIS LATERAL "A"). 43 FT. WEST OF CENTERLINE OF PERRIS BLVD. AND 4.5 FT. EAST OF CONCRETE BRIDGE BARRIER. (EDGE OF BRIDGE) MARKED R-102 D.MER. IN TOP OF CONC. POST FLUSH W/ GROUND
ELEVATION = 1474.674' (NAVD 1929)

REF.	DESCRIPTION	ENGINEER APPR.	ENGINEER DATE	RCFC/ APPR.	RCFC/ DATE
2	CHANGED SLOPE TO 0.0015, ADDED MH, ADDED NEW 10"S, CHANGED 42" LAT TO 24" LAT	H.I.A.	2/25/16	N/A	2/25/16
1	ADDED EX. UTILITIES, RELOCATE UTILITIES, REVISED SD	H. I.A	2/25/16	N/A	2/25/16
	CHANGED CAST IN PLACE RCB TO PRE-CAST RCB PER APWA 390-0				

DESIGNED BY:
DRAWN BY:
DATE DRAWN:

APPROVED BY:
Thienes Engineering, Inc.
CIVIL ENGINEERING • LAND SURVEYING
14349 FIRESTONE BOULEVARD
LA MIRADA, CALIFORNIA 90638
PH.(714)521-4811 FAX(714)521-4173
HAIDOOK I. AGHAIAN Date: 2/1/16
RCE NO. 43293

REGISTERED PROFESSIONAL ENGINEER HAIDOOK I. AGHAIAN R.C.E. NO. 43293 Exp. 3-31-16 CIVIL STATE OF CALIFORNIA

KAH 2/17/16

RIVERSIDE COUNTY FLOOD CONTROL AND WATER CONSERVATION DISTRICT
RECOMMENDED FOR APPROVAL BY: DATE:
APPROVED BY: DATE:

CITY OF PERRIS
APPROVED BY:
CITY ENGINEER: DATE: 2-5-16
RECOMMENDED DATE:

PERRIS VALLEY MDP LINE "A-B"

CITY OF PERRIS FILE NO. P8-1013
PROJECT NO. 4-0-00537
DRAWING NO. 4-1063
SHEET NO. 15A OF 18

Last Update:1/29/16
O:\2700-2799\2702\2702F\2702SD15.dwg

NOTE: CONTRACTOR SHALL PROTECT IN PLACE ALL UTILITIES CROSSINC OR PARALLELINC THE STORM ORAIN UNLESS OTHERWISE NOTEO.

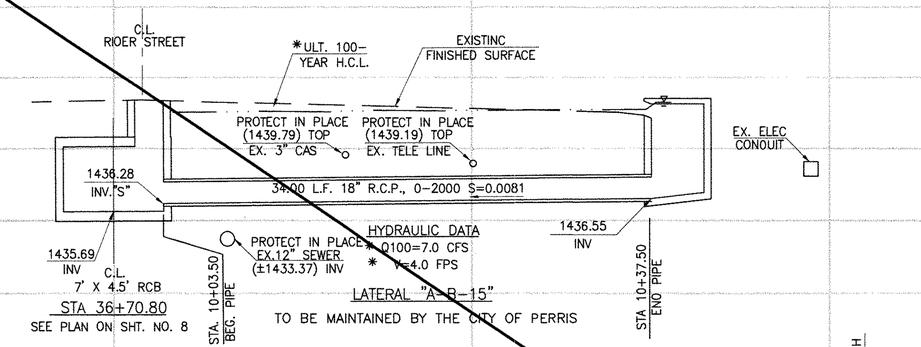

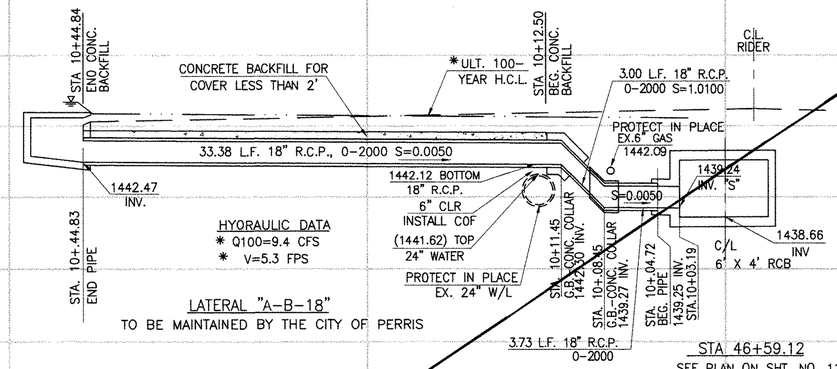

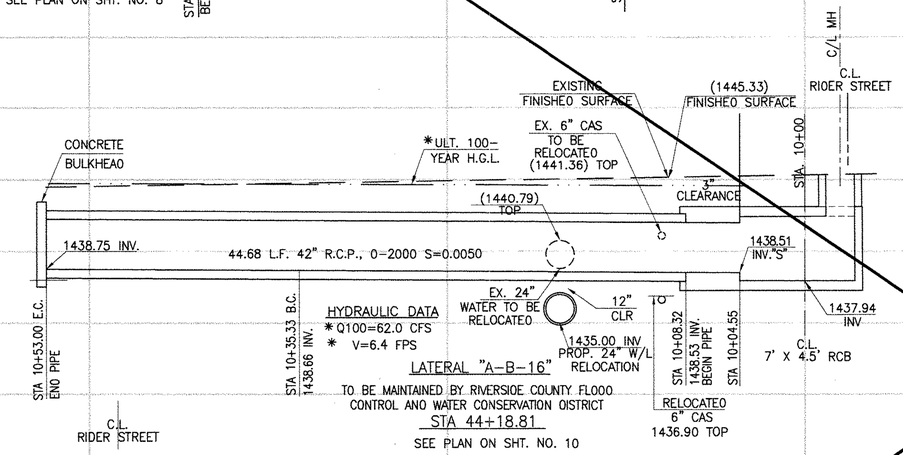

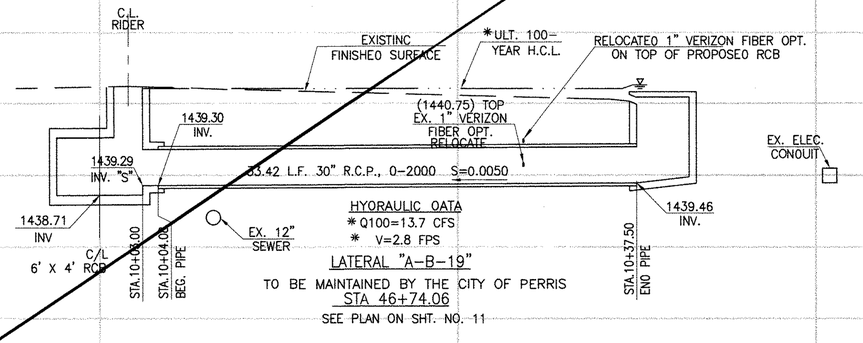

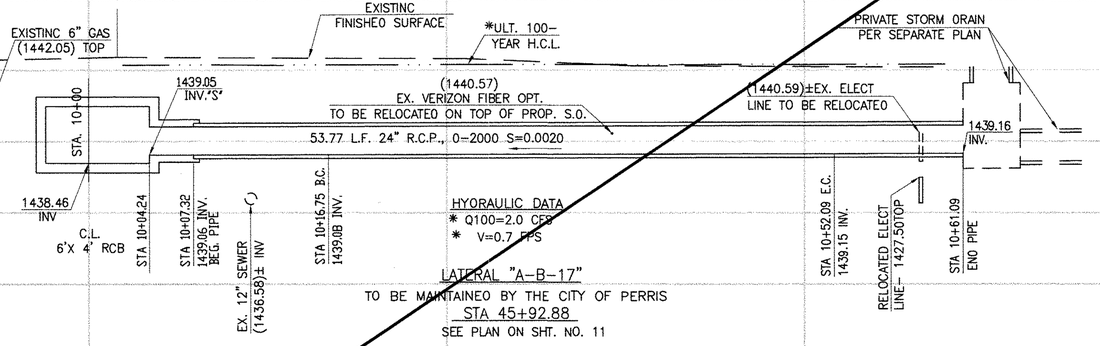

PROFILE SCALE:
HORIZ. - 1" = 5'
VERT. - 1" = 5'

* THE ULTIMATE H.G.L. IS BASED ON THE ADOPTED MDP WATER SURFACE ELEVATION OF 1433 IN THE PERRIS VALLEY STORM CHANNEL (PVSC) AT RIDER STREET, AND ASSUMES THAT FULL CHANNEL IMPROVEMENTS HAVE BEEN CONSTRUCTED PER THE ADOPTED MDP. FOR ALL WATER SURFACE ELEVATIONS BETWEEN 1433 AND THE 100-YEAR FLOOD ELEVATION FOR PVSC (1437.5), LINE "A-B" WILL NOT HAVE CAPACITY FOR LOCAL 100-YEAR FLOWS.

Don't Dig...Until You Call U.S.A. Toll Free 1-800-227-2600 for the location of buried utility lines. Don't disrupt vital services.
TWO WORKING DAYS BEFORE YOU DIG

CAUTION:
PROPOSED WORK IS IN PROXIMITY OF HIGH PRESSURE GAS LINES

BENCH MARK
COUNTY OF RIVERSIDE BENCHMARK NO. "M-31"
COUNTY OF RIVERSIDE BENCHMARK 3" Ø 1/4" ALUMINUM DISK MARKED M-31, LOCATED FLUSH AT THE SOUTH WEST CORNER OF BRIDGE ON TOP OF SIDEWALK NEAR FACE OF CURB LOCATED AT THE CROSSING OF PERRIS BLVD. AND RIV. CO. FLOOD CONTROL CHANNEL (PERRIS LATERAL 7-7) 43 FT. WEST OF CENTERLINE OF PERRIS BLVD. AND 4.5 FT. EAST OF CONCRETE BRIDGE BARRIER. (EDGE OF BRIDGE) MARKED PUNCH D.M.R. IN TOP OF CONC. POST FLUSH W/ GROUND.
ELEVATION = 1474.674' (NAVD 1929)

REF.	REVISIONS / DESCRIPTION	ENGINEER APPR.	DATE	RCFC/ APPR.	DATE
	SUPERSEDED BY SHEET 16A	H.I.A.	2/25/14	9/16	3/25/14

DESIGNED BY: BW
DRAWN BY: ET
DATE DRAWN:

APPROVED BY:
Thienes Engineering, Inc.
CIVIL ENGINEERING • LAND SURVEYING
14349 FIRESTONE BOULEVARD
LA MIRADA, CALIFORNIA 90638
PH.(714)521-4811 FAX(714)521-4173
HAIDOOK I. AGHAIAN Date: 11/18/14
RCE NO. 43293

REGISTERED PROFESSIONAL ENGINEER HAIDOOK I. AGHAIAN R.C.E. NO. 43293 Exp. 3-31-16 CIVIL STATE OF CALIFORNIA

KPH 4/10/14

RIVERSIDE COUNTY FLOOD CONTROL AND WATER CONSERVATION DISTRICT
RECOMMENDED FOR APPROVAL BY: DATE: 1/14/2015
APPROVED BY: DATE: 1/20/2015

CITY OF PERRIS
APPROVED BY:
CITY ENGINEER DATE: 12-15-14
RECOMMENDED DATE:

PERRIS VALLEY MDP LINE "A-B"

CITY OF PERRIS
FILE NO. P8-1013
PROJECT NO. 4-0-00537
DRAWING NO. 4-1063
SHEET NO. 16 OF 18

Last Update: 10/6/14
G:\2700-2799\2702\2702F\2702SD16.dwg

NOTE: CONTRACTOR SHALL PROTECT IN PLACE ALL UTILITIES CROSSING OR PARALLELINC THE STORM DRAIN UNLESS OTHERWISE NOTED.

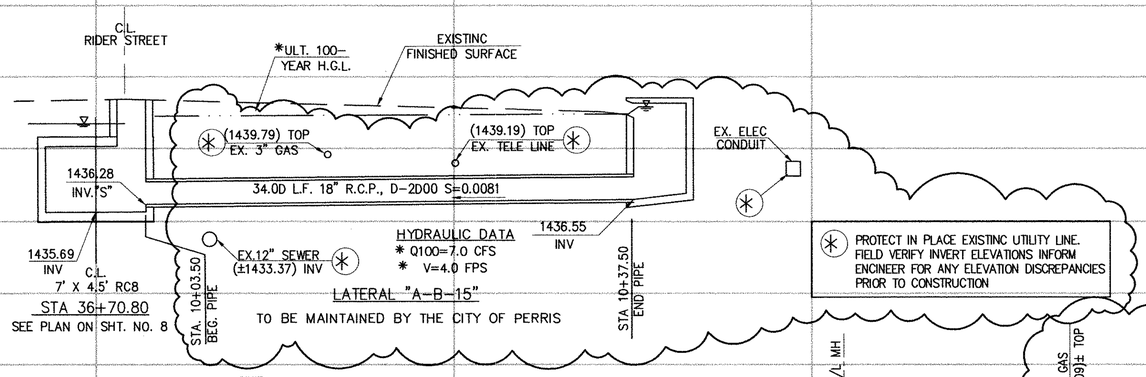

(*) PROTECT IN PLACE EXISTINC UTILITY LINE. FIELD VERIFY INVERT ELEVATIONS INFORM ENCINEER FOR ANY ELEVATION DISCREPANCIES PRIOR TO CONSTRUCTION

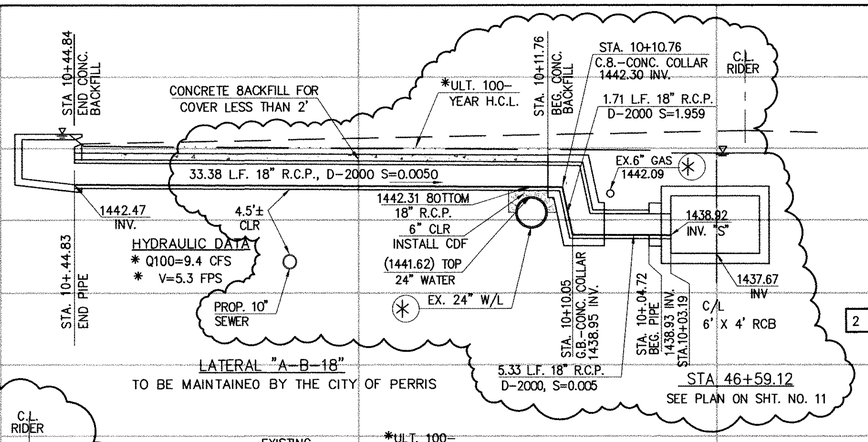

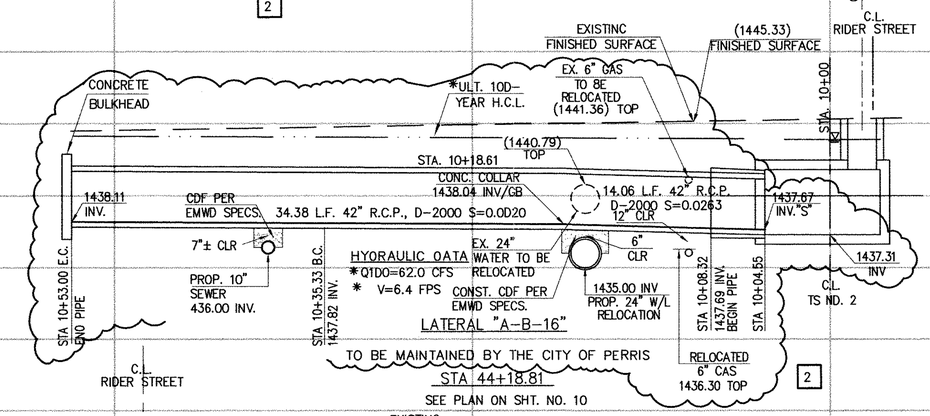

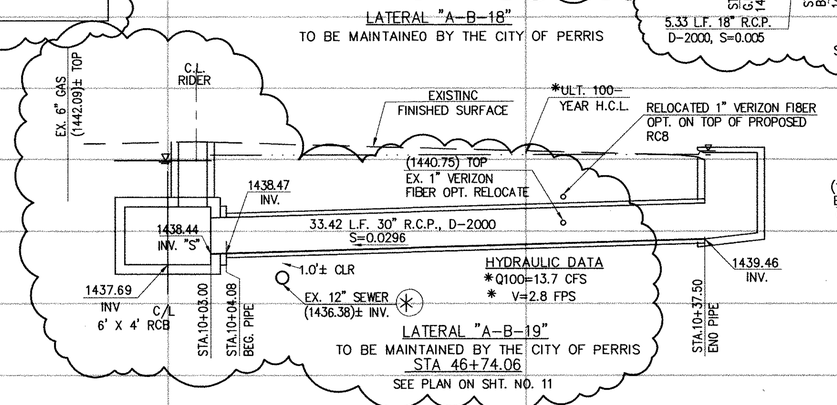

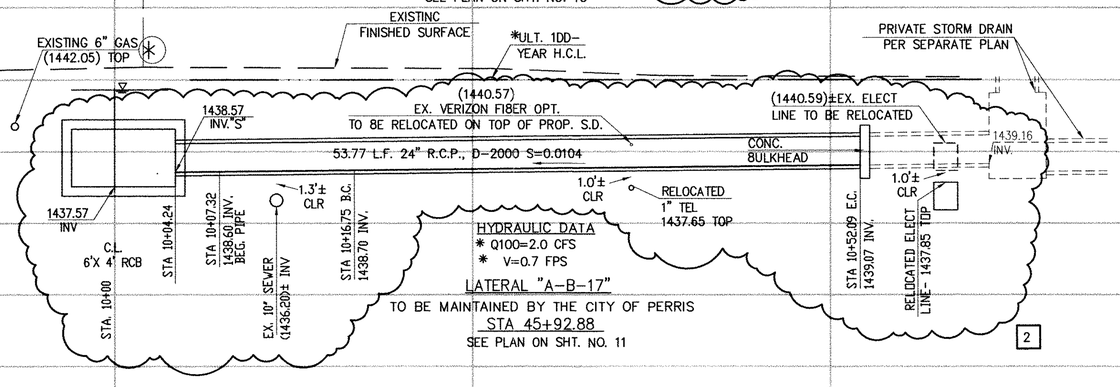

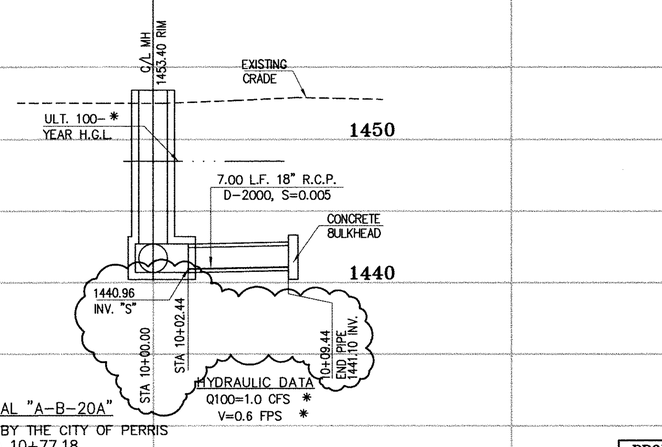

PROFILE SCALE:
HORIZ. - 1" = 5'
VERT. - 1" = 5'

Don't Dig...Until You Call U.S.A. Toll Free 1-800-227-2600 for the location of buried utility lines. Don't disrupt vital services.

TWO WORKING DAYS BEFORE YOU DIG

CAUTION:
PROPOSED WORK IS IN PROXIMITY OF HIGH PRESSURE GAS LINES

(*) THE ULTIMATE H.G.L. IS BASED ON THE AOOPTED MOP WATER SURFACE ELEVATION OF 1433 IN THE PERRIS VALLEY STORM CHANNEL (PVSC) AT RIOER STREET, ANO ASSUMES THAT FULL CHANNEL IMPROVEMENTS HAVE BEEN CONSTRUCTEO PER THE AOOPTEO MOP. FOR ALL WATER SURFACE ELEVATIONS BETWEEN 1433 ANO THE 100-YEAR FLOOD ELEVATION FOR PVSC (1437.5), LINE "A-B" WILL NOT HAVE CAPACITY FOR LOCAL 100-YEAR FLOWS.

BENCH MARK

COUNTY OF RIVERSIDE BENCHMARK NO. "H-31"

COUNTY OF RIVERSIDE BENCHMARK - 3 1/4" ALUMINUM DISK MARKED H-31, LOCATED FLUSH AT THE SOUTH WEST CORNER OF BRIDGE ON TOP OF SIDEWALK NEAR FACE OF CURB LOCATED AT THE CROSSING OF PERRIS BLVD. AND RIV. CO. FLOOD CONTROL CHANNEL (PERRIS LATERAL "A"), 43 FT. WEST OF CENTERLINE OF PERRIS BLVD. AND 4.5 FT. EAST OF CONCRETE BRIDGE BARRIER (EDGE OF BRIDGE) MARKED R-102 D.M.R. IN TOP OF CONC. POST FLUSH W/ GROUND

ELEVATION = 1474.874' (NAVD 1929)

REF.	REVISIONS	ENGINEER APPR.	ENGINEER DATE	RCFC/ APPR.	RCFC/ DATE
2	CHANGED SLOPE TO 0.0015, ADDED MH, ADDED NEW 10"S, CHANGED 42" LAT TO 24" LAT ADDED EX. UTILITIES, RELOCATE UTILITIES, REVISED SD	H.I.A.	2/29/16	26	2/29/16
1	CHANGED CAST IN PLACE RCB TO PRE-CAST RCB PER APWA 300-0	H.I.A.	2/29/16	26	2/29/16

DESIGNED BY:
DRAWN BY:
DATE DRAWN:

APPROVED BY:
Thienes Engineering, Inc.
CIVIL ENGINEERING • LAND SURVEYING
14349 FIRESTONE BOULEVARD
LA MIRADA, CALIFORNIA 90638
PH.(714)521-4811 FAX(714)521-4173
Haidook I. Aghaian Date: 2/1/16
HAIDOOK I. AGHAIAN RCE NO. 43293

REGISTERED PROFESSIONAL ENGINEER HAIDOOK I. AGHAIAN R.C.E. NO. 43293 Exp. 3-31-16 CIVIL STATE OF CALIFORNIA

RIVERSIDE COUNTY FLOOD CONTROL AND WATER CONSERVATION DISTRICT
RECOMMENDED FOR APPROVAL BY: DATE:
APPROVED BY: DATE:

CITY OF PERRIS
APPROVED BY:
CITY ENGINEER DATE: 2-5-16
RECOMMENDED DATE:

CITY OF PERRIS
FILE NO. P8-1013

PERRIS VALLEY MDP LINE "A-B"

PROJECT NO. 4-0-00537
DRAWING NO. 4-1063
SHEET NO. 16A OF 18

Last Update: 1/29/16
O:\2700-2799\2702\2702F\2702SD16.dwg

TO BE MAINTAINED BY RIVERSIDE COUNTY FLOOD CONTROL AND WATER CONSERVATION DISTRICT

TO BE PRIVATELY MAINTAINED

STA 11+05.79 C/L MH 1456.60 RIM

STA 10+80.38 C/L MH 1453.40 RIM

R/W

EXISTING SURFACE

EXISTING 6" GAS (1449.26 TOP PH-IRC

(1445.71 BOT)±EX. ELECT LINE TO BE RELOCATED PH-12 (HZ)

EXISTING CONCRETE SWALE

TOP OF RIM TO BE ADJUSTED PER FUTURE STREET PLANS

EXISTING GRADE

RIDER

STA. 10+00

ULT. 100-* YEAR H.G.L.

PROP. 27" W/L RELOCATION 1448.0 BOT.

12" CLR

LATERAL "A-20A" 1443.98 INV. "S"

4.00 L.F. 42" R.C.P. D-2000, S=0.0030

1450

1442.51 INV

1442.77 INV. "S"

66.63 L.F. 42" R.C.P. D-2000, S=0.0030

S=0.0030

20.73 L.F. 42" R.C.P. D-2000, S=0.0030

CONCRETE BULKHEAD

1440

C.L. 6' X 4' RCB

STA.10+04.29

1442.79 INV. BEG. PIPE

STA.10+09.58

TO BE RELOCATED EXISTING 27" WATER LINE (1447.06 BOT) PH NO.2

HYDRAULIC DATA Q100=55.7 CFS * V=5.8 FPS *

LATERAL "A-B-20"

STA 57+73.62

SEE PLAN ON SHT. NO. 13

NOTE: CONTRACTOR SHALL PROTECT IN PLACE ALL UTILITIES CROSSING OR PARALLELING THE STORM DRAIN UNLESS OTHERWISE NOTED.

STA 10+76.21 END PIPE 1442.99 INV.

STA 10+82.71 BEGIN PIPE 1443.01 INV.

HYDRAULIC DATA Q100=55.70 CFS* V=5.8 FPS *

STA 11+03.44 END PIPE 1443.07 INV.

STA 11+08.11 BEGIN PIPE 1443.08 INV.

STA 11+12.11 END PIPE 1443.09 INV.

TO BE PRIVATELY MAINTAINED

TO BE MAINTAINED BY RIVERSIDE COUNTY FLOOD CONTROL AND WATER CONSERVATION DISTRICT

STA 10+95.81 C/L MH 1457.20 RIM

R/W

EXISTING GRADE

PROP. 27" W/L RELOCATION 1448.0 BOT.

EXISTING SURFACE

(1445.71 BOT)±EX. ELECT LINE TO BE RELOCATED PH-12 (HZ)

EXISTING CONCRETE SWALE

EXISTING GRADE

RIDER

STA. 10+00

EXISTING 6" GAS (1448.00) TOP (VERIFY)

ULT. 100-* YEAR H.G.L.

4.00 L.F. 42" R.C.P. D-2000, S=0.0030

1450

12" CLR

1442.56 INV

1442.82 INV. "S"

83.87 L.F. 42" R.C.P. D-2000, S=0.0030

CONCRETE BULKHEAD

1440

C.L. 6' X 4' RCB

STA 10+04.41

STA.10+09.58

1442.84 INV. BEG. PIPE

RELOCATE EXISTING 27" WATER LINE (1447.06 BOT) PH. NO. 2

LATERAL "A-B-21"

HYDRAULIC DATA Q100=57.3 CFS * V=6.0 FPS *

STA 10+93.46 END PIPE 1443.09 INV.

STA 10+98.12 BEGIN PIPE 1443.10 INV.

STA 11+02.12 END PIPE 1443.11 INV.

C/L MH 1455.40 RIM

EXISTING GRADE

ULT. 100-* YEAR H.G.L.

4.00 L.F. 18" R.C.P. D-2000, S=0.0955

CONCRETE BULKHEAD

1450

STA 57+87.61

SEE PLAN ON SHT. NO. 13

1443.98 INV. "S"

STA 10+02.44

STA 10+05.44 BEG. PIPE 1444.27 INV.

10+09.44 END PIPE 1444.69 INV.

LATERAL "A-B-20A"

TO BE MAINTAINED BY THE CITY OF PERRIS

STA 10+77.18

SEE PLAN ON SHT. NO. 13

HYDRAULIC DATA Q100=1.0 CFS * V=0.6 FPS *

1440

PROFILE SCALE:
HORIZ. - 1" = 5'
VERT. - 1" = 5'

* THE ULTIMATE H.G.L. IS BASED ON THE ADOPTED MDP WATER SURFACE ELEVATION OF 1433 IN THE PERRIS VALLEY STORM CHANNEL (PVSC) AT RIDER STREET, AND ASSUMES THAT FULL CHANNEL IMPROVEMENTS HAVE BEEN CONSTRUCTED PER THE ADOPTED MDP. FOR ALL WATER SURFACE ELEVATIONS BETWEEN 1433 AND THE 100-YEAR FLOOD ELEVATION FOR PVSC (1437.5), LINE "A-B" WILL NOT HAVE CAPACITY FOR LOCAL 100-YEAR FLOWS.

Don't Dig...Until You Call U.S.A. Toll Free 1-800-227-2600 for the location of buried utility lines. Don't disrupt vital services. TWO WORKING DAYS BEFORE YOU DIG

CAUTION: PROPOSED WORK IS IN PROXIMITY OF HIGH PRESSURE GAS LINES

KH 4/10/14

BENCH MARK
COUNTY OF RIVERSIDE BENCHMARK NO. "H-31"
COUNTY OF RIVERSIDE BENCHMARK "H-31" ALUMINUM DISK MARKED H-31, LOCATED FLUSH AT THE SOUTH WEST CORNER OF BRIDGE ON TOP OF SIDEWALK NEAR FACE OF CURB LOCATED AT THE CROSSING OF PERRIS BLVD. AND RIV. CO. FLOOD CONTROL CHANNEL (PERRIS LATERAL "A"), 43 FT. WEST OF CENTERLINE OF PERRIS BLVD. AND 4.5 FT. EAST OF CONCRETE BRIDGE BARRIER. (EDGE OF BRIDGE) MARKED WITH D.M.R. IN TOP OF CONC. POST FLUSH W/ GROUND.
ELEVATION = 1474.674' (NAVD 1929)

REF.	REVISIONS	ENGINEER	DATE	RCFC/	APPR.	DATE
	SUPERSEDED BY SHEET 17A	H.I.A.	2/25/14			

DESIGNED BY: BW
DRAWN BY: ET
DATE DRAWN:

APPROVED BY:
Thienes Engineering, Inc.
CIVIL ENGINEERING • LAND SURVEYING
14349 FIRESTONE BOULEVARD
LA MIRADA, CALIFORNIA 90638
PH.(714)521-4811, FAX(714)521-4173
Haidook I. Aghaian Date: 11/18/14
HAIDOOK I. AGHAIAN RCE NO. 43293

REGISTERED PROFESSIONAL ENGINEER HAIDOOK I. AGHAIAN R.C.E. NO. 43293 Exp. 3-31-16 CIVIL STATE OF CALIFORNIA

RIVERSIDE COUNTY FLOOD CONTROL AND WATER CONSERVATION DISTRICT
RECOMMENDED FOR APPROVAL BY: DATE: 1/20/2015
APPROVED BY: DATE: 1/20/2015

CITY OF PERRIS
APPROVED BY:
CITY ENGINEER DATE: 12-15-14
RECOMMENDED DATE:

PERRIS VALLEY MDP LINE "A-B"

CITY OF PERRIS
FILE NO. P8-1013
PROJECT NO. 4-0-00537
DRAWING NO. 4-1063
SHEET NO. 17 OF 18

Last Update: 11/18/14
O:\2700-2799\2702\2702F\2702SD17.dwg

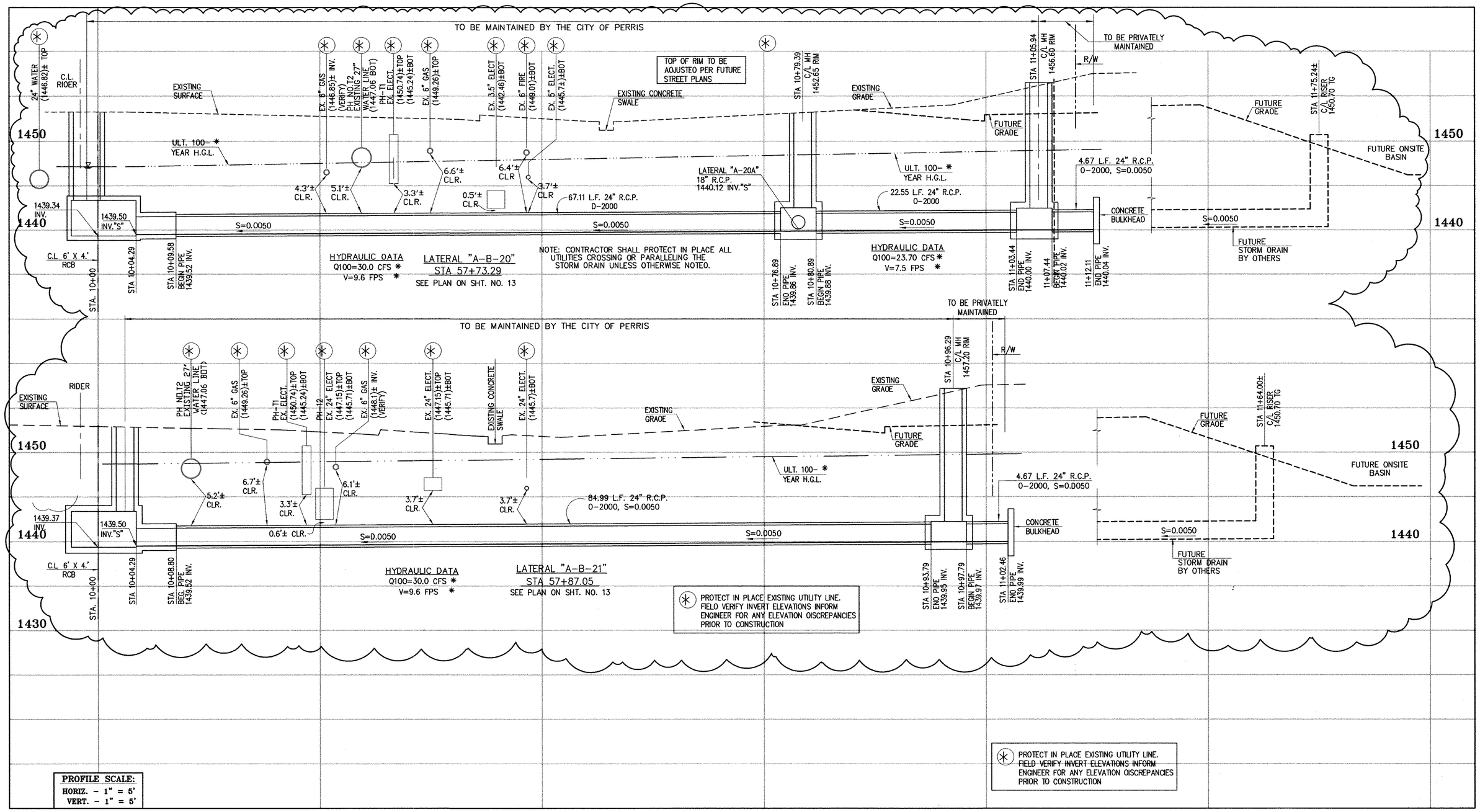

Don't Dig...Until You Call U.S.A. Toll Free 1-800-227-2600

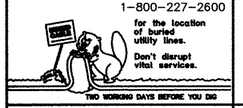

for the location of buried utility lines. Don't disrupt vital services.

TWO WORKING DAYS BEFORE YOU DIG

CAUTION:
PROPOSED WORK IS IN PROXIMITY OF HIGH PRESSURE GAS LINES

✳ THE ULTIMATE H.G.L. IS BASED ON THE AOOPTED MDP WATER SURFACE ELEVATION OF 1433 IN THE PERRIS VALLEY STORM CHANNEL (PVSC) AT RIOER STREET, ANO ASSUMES THAT FULL CHANNEL IMPROVEMENTS HAVE BEEN CONSTRUCTEO PER THE AOOPTEO MOP. FOR ALL WATER SURFACE ELEVATIONS BETWEEN 1433 ANO THE 100-YEAR FLOOO ELEVATION FOR PVSC (1437.5), LINE "A-B" WILL NOT HAVE CAPACITY FOR LOCAL 100-YEAR FLOWS.

BENCH MARK

COUNTY OF RIVERSIDE BENCHMARK NO. "24-31"
COUNTY OF RIVERSIDE BENCHMARK - 3 1/4" ALUMINUM DISK MARKED M-31, LOCATED FLUSH AT THE SOUTH WEST CORNER OF BRIDGE ON TOP OF SIDEWALK NEAR FACE OF CURB LOCATED AT THE CROSSING OF PERRIS BLVD. AND RIV. CO. FLOOD CONTROL CHANNEL (PERRIS LATERAL "A"). 43 FT. WEST OF CENTERLINE OF PERRIS BLVD. AND 4.5 FT. EAST OF CONCRETE BRIDGE BARRIER. (EDGE OF BRIDGE) MARKED R-102 D.W.R. IN TOP OF CONC. POST FLUSH W/ GROUND
ELEVATION = 1474.874' (NAVD 1928)

REF.	DESCRIPTION	ENGINEER APPR.	ENGINEER DATE	RCFC/ APPR.	RCFC/ DATE
2	CHANGED SLOPE TO 0.0015, ADDED MH, ADDED NEW 10"S, CHANGED 42" LAT TO 24" LAT. ADDED EX. UTILITIES, RELOCATE UTILITIES, REVISED SD	H.I.A.	2/26/16	DG	2/25/16
1	CHANGED CAST IN PLACE RCB TO PRE-CAST RCB PER APWA 390-0	H.I.A.	2/25/16	DG	2/25/16

DESIGNED BY:
DRAWN BY:
DATE DRAWN:

APPROVED BY:
Thienes Engineering, Inc.
CIVIL ENGINEERING • LAND SURVEYING
14349 FIRESTONE BOULEVARD
LA MIRADA, CALIFORNIA 90638
PH.(714)521-4811 FAX(714)521-4173
HAIDOOK I. AGHAIAN
Date: 2/1/16
RCE NO. 43293

REGISTERED PROFESSIONAL ENGINEER HAIDOOK I. AGHAIAN R.C.E. NO. 43293 Exp. 3-31-16 CIVIL STATE OF CALIFORNIA

KPH 2/17/16

RIVERSIOE COUNTY FLOOD CONTROL AND WATER CONSERVATION DISTRICT
RECOMMENDED FOR APPROVAL BY: DATE:
APPROVED BY: DATE:

CITY OF PERRIS
APPROVED BY:
CITY ENGINEER 2-5-16 DATE:
RECOMMENDED DATE:

PERRIS VALLEY MDP LINE "A-B"

CITY OF PERRIS FILE NO. P8-1013
PROJECT NO. 4-0-00537
DRAWING NO. 4-1063
SHEET NO. 17A OF 18

Last Update:1/29/16
O:\2700-2799\2702\2702F\2702SD17.dwg

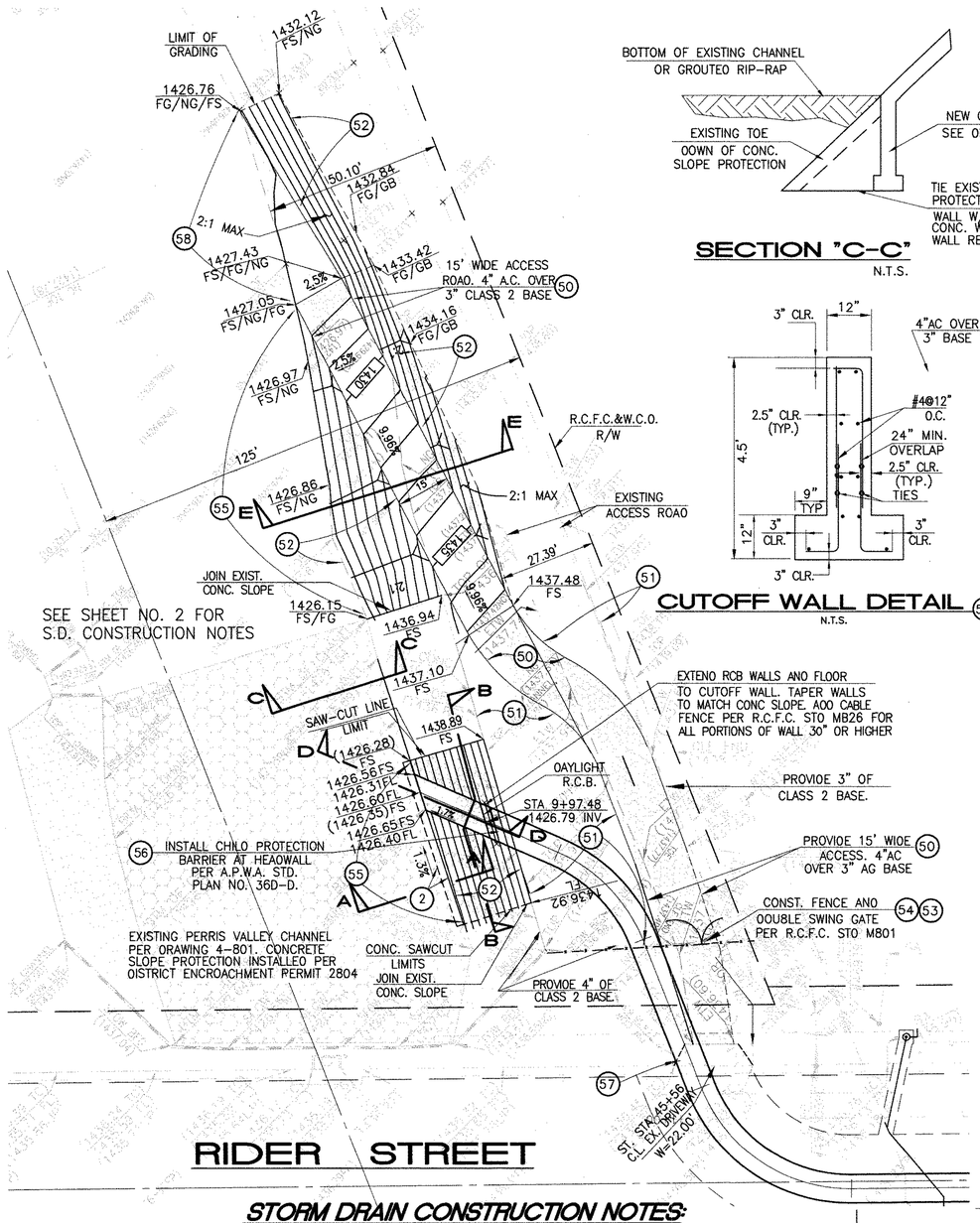

SECTION "C-C"
N.T.S.

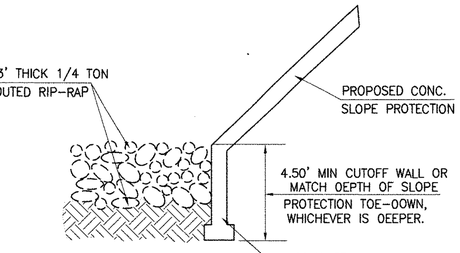

SECTION "A-A"
N.T.S.

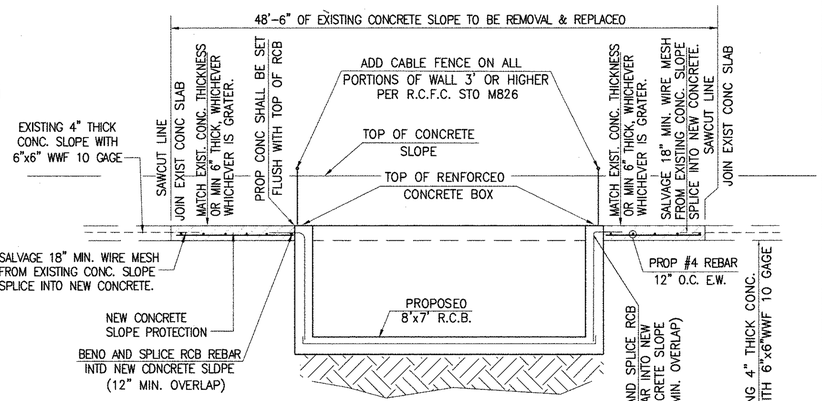

SECTION "B-B"
N.T.S.

CUTOFF WALL DETAIL
58
N.T.S.

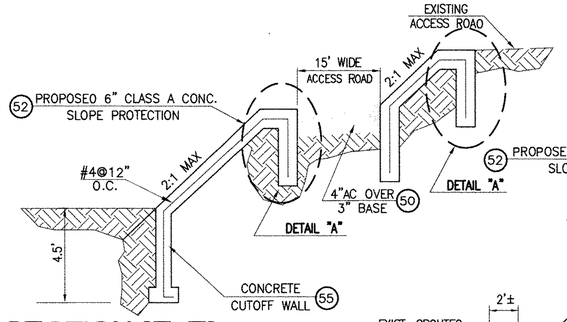

SECTION "E-E"
N.T.S.

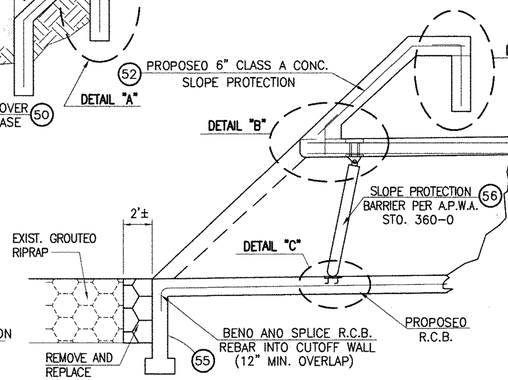

SECTION "D-D"
N.T.S.

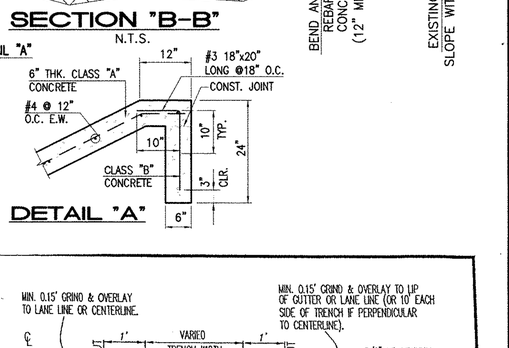

DETAIL "A"

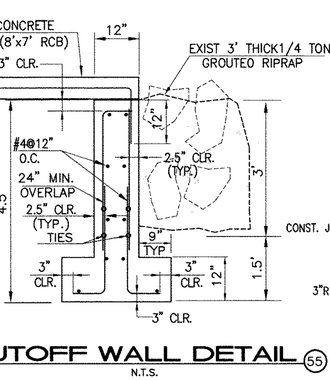

CUTOFF WALL DETAIL
55
N.T.S.

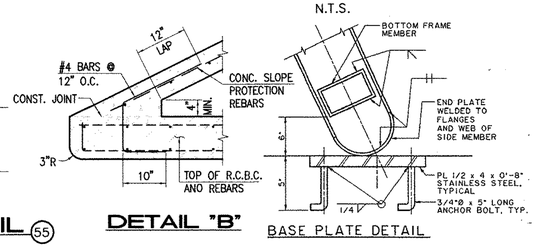

DETAIL "B"

SLOPE PROTECTION BARRIER
A.P.W.A. STD. 36D-D

DETAIL "C"

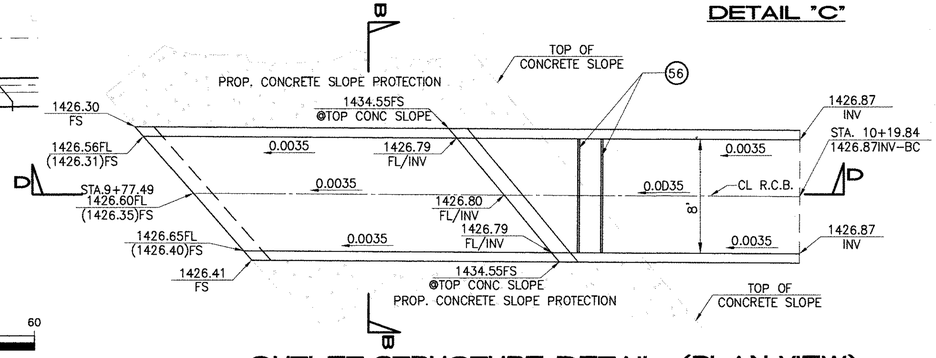

OUTLET STRUCTURE DETAIL (PLAN VIEW)
N.T.S.

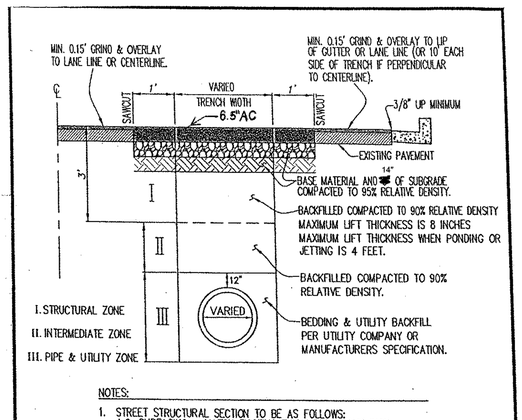

NOTES:

1. STREET STRUCTURAL SECTION TO BE AS FOLLOWS:
   A.C. SURFACING = MATCH EXISTING THICKNESS + ONE INCH.
   BASE = MATCH EXISTING THICKNESS (MUST USE CLASS II BASE)
   ~~IN NO CASE SHALL THE STRUCTURAL SECTION BE LESS THAN 3" OVER 8" CLASS 2 BASE~~. CITY MAY ALSO SPECIFY STRUCTURAL SECTION FOR ROADWAY IN CERTAIN SITUATIONS.
2. WHEN A FIRM FOUNDATION IS NOT ENCOUNTERED DUE TO SOFT, SPONGY OR OTHER UNSUITABLE MATERIAL SUCH MATERIAL SHALL BE REMOVED TO THE LIMITS DIRECTED BY THE INSPECTOR, AND THE RESULTING EXCAVATION BACKFILLED WITH CLASS II BASE.
3. CONTRACTOR TO PROVIDE INSPECTOR COPY OF COMPACTION REPORTS PRIOR TO PAVING.

CITY OF PERRIS
CITY STANDARD
UTILITY TRENCH SURFACE REPAIR
SCALE: NONE
APPROVED BY:
CITY ENGINEER: DATE: 7-12-06
STD. NO. N/A

TRENCH AND SURFACE REPAIR DETAIL
18

STORM DRAIN CONSTRUCTION NOTES:

(2) REMOVE AND REPLACE APPROXIMATELY 2' WIDE 1/4 TON GROUTED RIPRAP, MATCH EXISTING THICKNESS.
(50) CONSTRUCT 4" AC OVER 3" AGGREGATE BASE, CLASS 2.
(51) INSTALL 3" AGGREGATE BASE, CLASS 2.
(52) CONSTRUCT 6" THK. CONCRETE SLOPE PROTECTION PER DETAIL ON THIS SHEET.
(53) CONSTRUCT FENCE AND DOUBLE SWING GATE PER R.C.F.D. STD. M801.
(54) REMOVE EXISTING FENCE AND GATE.
(55) CONSTRUCT CUTOFF WALL PER DETAIL ON THIS SHEET.
(56) INSTALL SLOPE PROTECTION BARRIER PER APWA STD. PLAN 360.
(57) RECONSTRUCT EXISTING DRIVEWAY APPROACH.
(58) CONSTRUCT CUTOFF WALL PER DETAIL ON THIS SHEET.

Don't Dig...Until You Call U.S.A. Toll Free
1-800-227-2600
for the location of buried utility lines.
Don't disrupt vital services.
TWO WORKING DAYS BEFORE YOU DIG

BENCH MARK
COUNTY OF RIVERSIDE BENCHMARK NO. "24-31"
COUNTY OF RIVERSIDE BENCHMARK - 3 1/4" ALUMINUM DISK MARKED M-31, LOCATED FLUSH AT THE SOUTH WEST CORNER OF BRIDGE ON TOP OF SIDEWALK NEAR FACE OF CURB LOCATED AT THE CROSSING OF PERRIS BLVD. AND RIV. CO. FLOOD CONTROL CHANNEL (PERRIS LATERAL "A") 43 FT. WEST OF CENTERLINE OF PERRIS BLVD. AND 4.5 FT. EAST OF CONCRETE BRIDGE BARRIER. (EDGE OF BRIDGE) MARKED R-102 D.W.R. IN TOP OF CONC. POST FLUSH W/ GROUND
ELEVATION = 1474.674' (NAVD 1929)

REF.	REVISIONS / DESCRIPTION	ENGINEER APPR.	ENGINEER DATE	RCFC/ APPR.	RCFC/ DATE

DESIGNED BY: BW
DRAWN BY: ET
DATE DRAWN:

APPROVED BY:
Thienes Engineering, Inc.
CIVIL ENGINEERING • LAND SURVEYING
14349 FIRESTONE BOULEVARD
LA MIRADA, CALIFORNIA 90638
PH.(714)521-4811 FAX(714)521-4173
HAIDOOK I. AGHAIAN Date: 11/18/14
RCE NO. 43293

REGISTERED PROFESSIONAL ENGINEER HAIDOOK I. AGHAIAN R.C.E. NO. 43293 Exp. 3-31-16 CIVIL STATE OF CALIFORNIA

RIVERSIDE COUNTY FLOOD CONTROL AND WATER CONSERVATION DISTRICT
RECOMMENDED FOR APPROVAL BY: DATE: 1/20/2015
APPROVED BY: DATE: 1/20/2015

CITY OF PERRIS
APPROVED BY:
CITY ENGINEER DATE: 12-15-14
RECOMMENDED DATE:

PERRIS VALLEY MDP
LINE "A-B"
DETAILS

CITY OF PERRIS
FILE NO. P8-1013
PROJECT NO. 4-0-00537
DRAWING NO. 4-1063
SHEET NO. 18 OF 18

Last Update:11/18/14
O:\2700-2799\2702\2702F\2702SD18.dwg

Appendix E: Ultimate Perris Valley Storm Drain Channel Plans

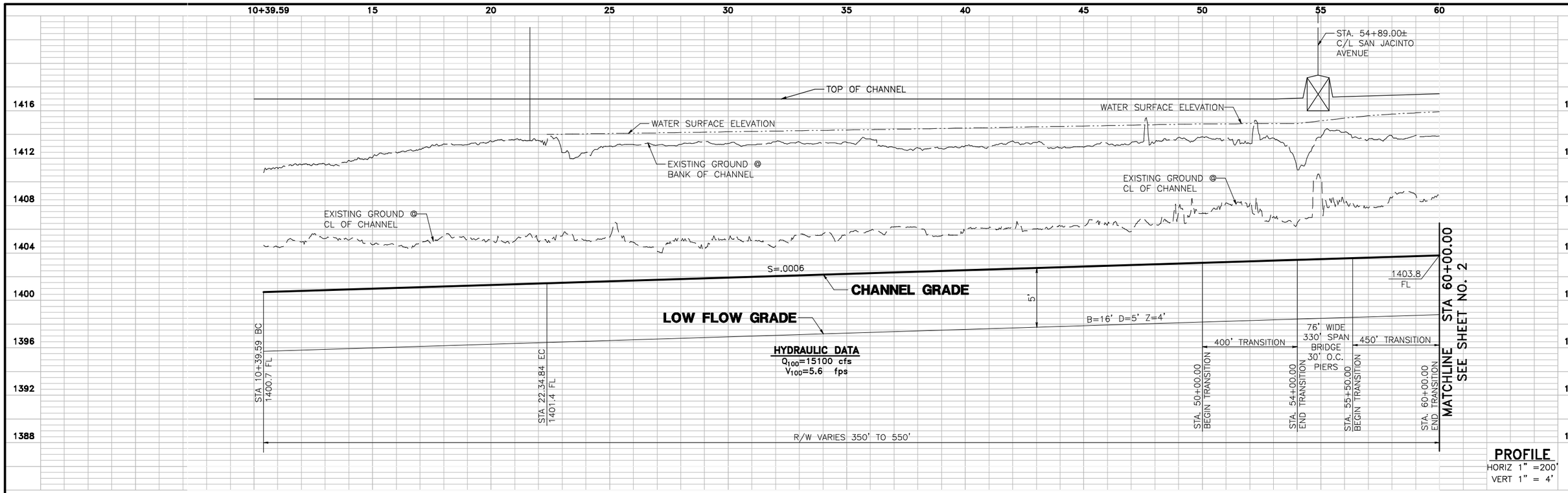

PROFILE
HORIZ 1" =200'
VERT 1" = 4'

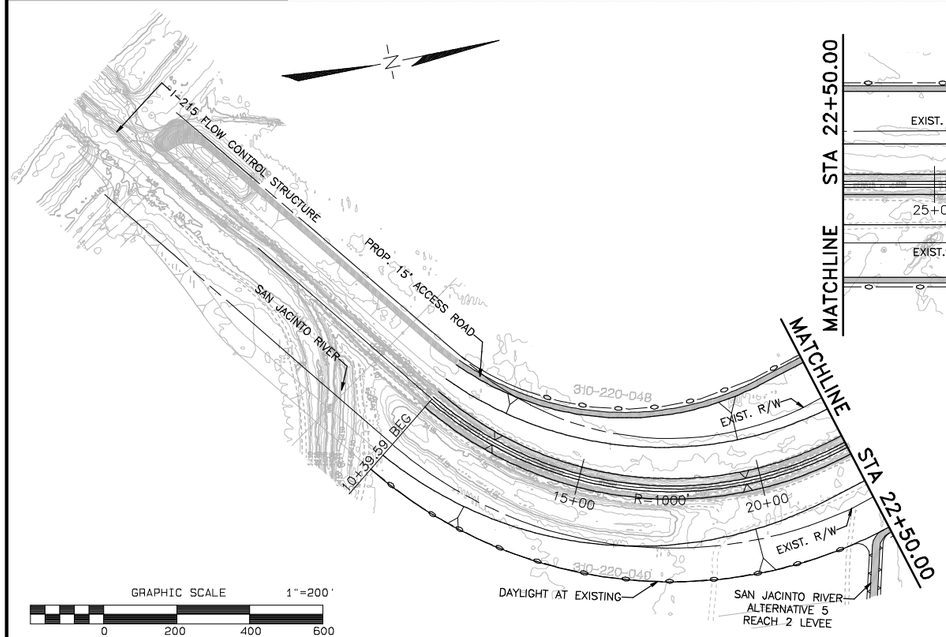

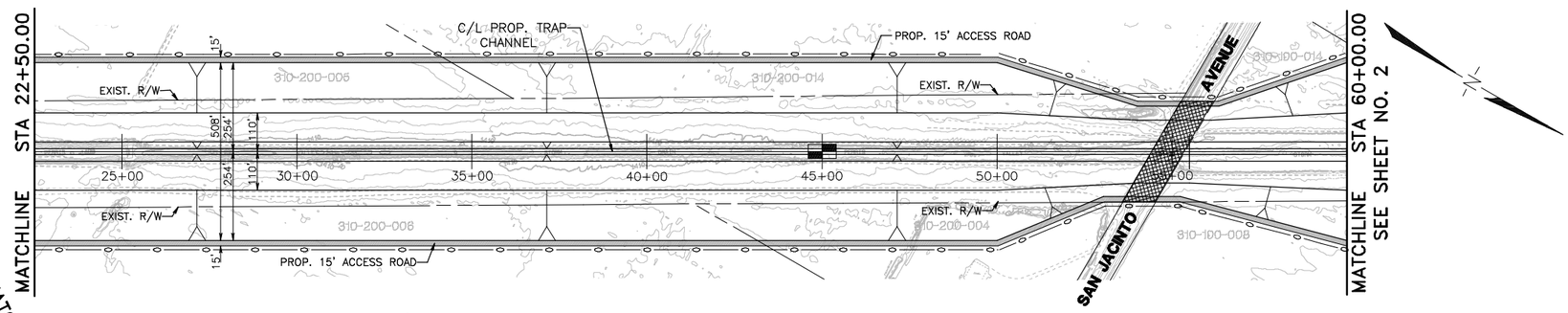

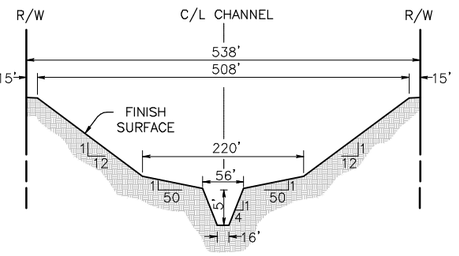

STA. 45+00.00
SCALE: 1" = 100'

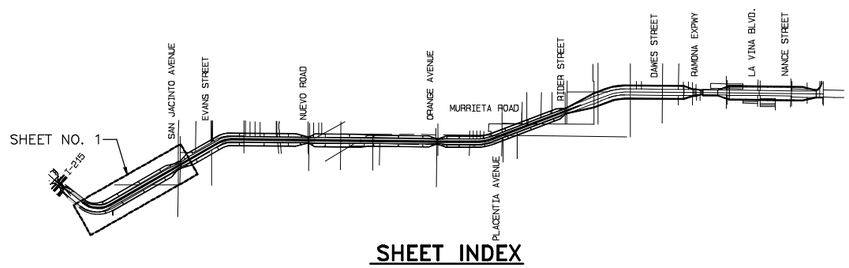

SHEET INDEX
N.T.S.

G:\2003\03-0451\Dwg\Pro\PVS0.dwg8/8/2006

UNDERGROUND SERVICE ALERT
CALL: TOLL FREE
1·800
227·2600
TWO WORKING DAYS BEFORE YOU DIG

PERRIS VALLEY STORM DRAIN
ALTERNATIVE 5

SEAL
REGISTERED PROFESSIONAL ENGINEER
SCOTT R. HILDEBRANDT
NO. C44762
EXP. 3-31-08
CIVIL
STATE OF CALIFORNIA

ALBERT A. WEBB ASSOCIATES
ENGINEERING CONSULTANTS
3788 McCRAY STREET, RIVERSIDE, CA 92506
PH. (951) 686-1070 FAX (951) 788-1256

APPROVED BY: _____ DATE: _____
R.C.E. NO. C44762 EXP. DATE: 3-31-08

DESIGNED BY:
DRAWN BY: D.V.A.J.
CHECKED BY: SRH

REF.	REVISIONS	APPR.	DATE

PRELIMINARY PROFILE
PERRIS VALLEY STORM DRAIN
ALTERNATIVE 5

PROJECT NO. 03-0451
DRAWING NO. ALTERNATIVE 5
SHEET NO. 1 OF 6

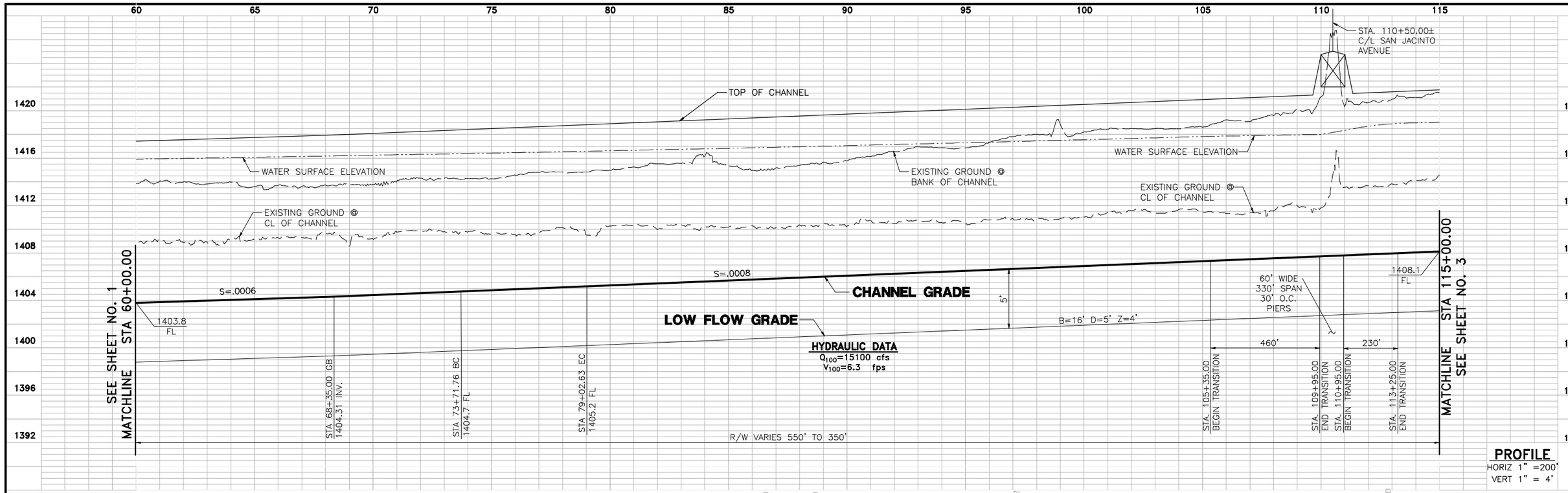

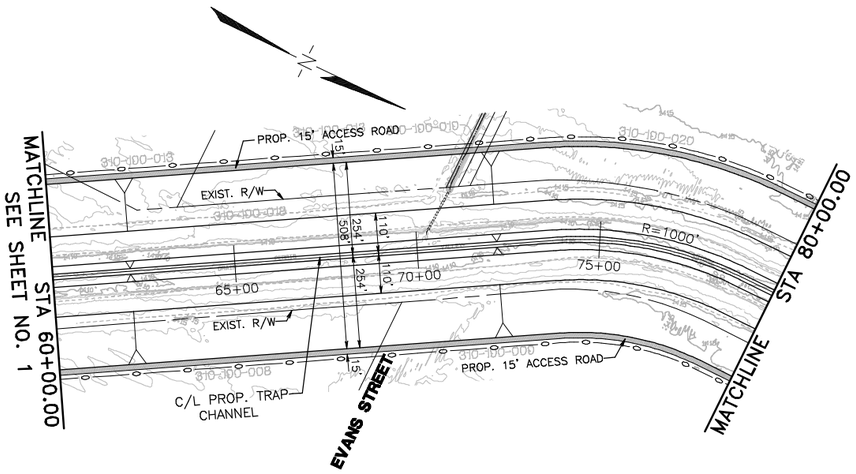

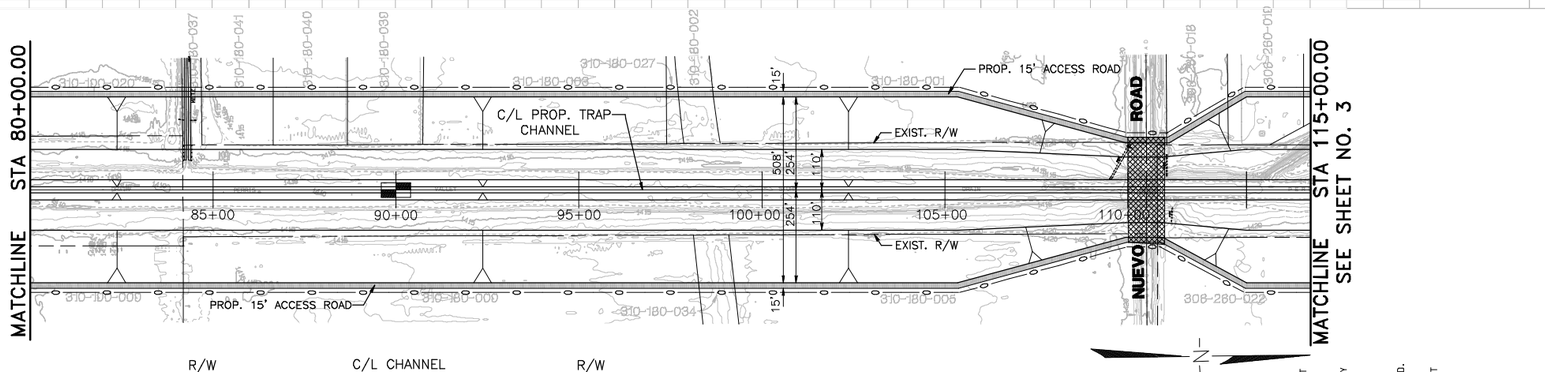

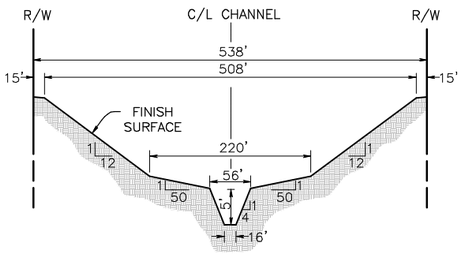

STA. 90+00.00
SCALE: 1" = 100'

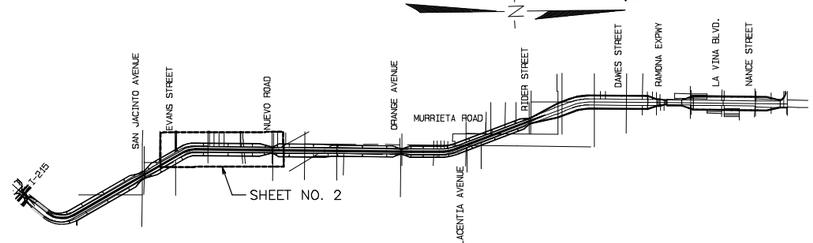

SHEET INDEX
N.T.S.

GRAPHIC SCALE 1"=200'
0 200 400 600

G:\2003\03-0451\Dwg\Pro\PVSD.prn8/8/2006

UNDERGROUND SERVICE ALERT
CALL: TOLL FREE
1-800
227-2600
TWO WORKING DAYS BEFORE YOU DIG

PERRIS VALLEY STORM DRAIN
ALTERNATIVE 5

SEAL
REGISTERED PROFESSIONAL ENGINEER
SCOTT R. HILDEBRAND
NO. C44762
EXP. 3-31-08
CIVIL
STATE OF CALIFORNIA

ALBERT A. WEBB ASSOCIATES
ENGINEERING CONSULTANTS
3788 McCRAY STREET, RIVERSIDE, CA 92506
PH. (951) 686-1070 FAX (951) 788-1256

APPROVED BY: DATE:
R.C.E. NO. C44762 EXP. DATE: 3-31-08
DESIGNED BY:
DRAWN BY: D.V.A.J.
CHECKED BY: SRH

REF.	REVISIONS	APPR.	DATE

PRELIMINARY PROFILE
PERRIS VALLEY STORM DRAIN
ALTERNATIVE 5

PROJECT NO. 03-0451
DRAWING NO. ALTERNATIVE 5
SHEET NO. 2 OF 6

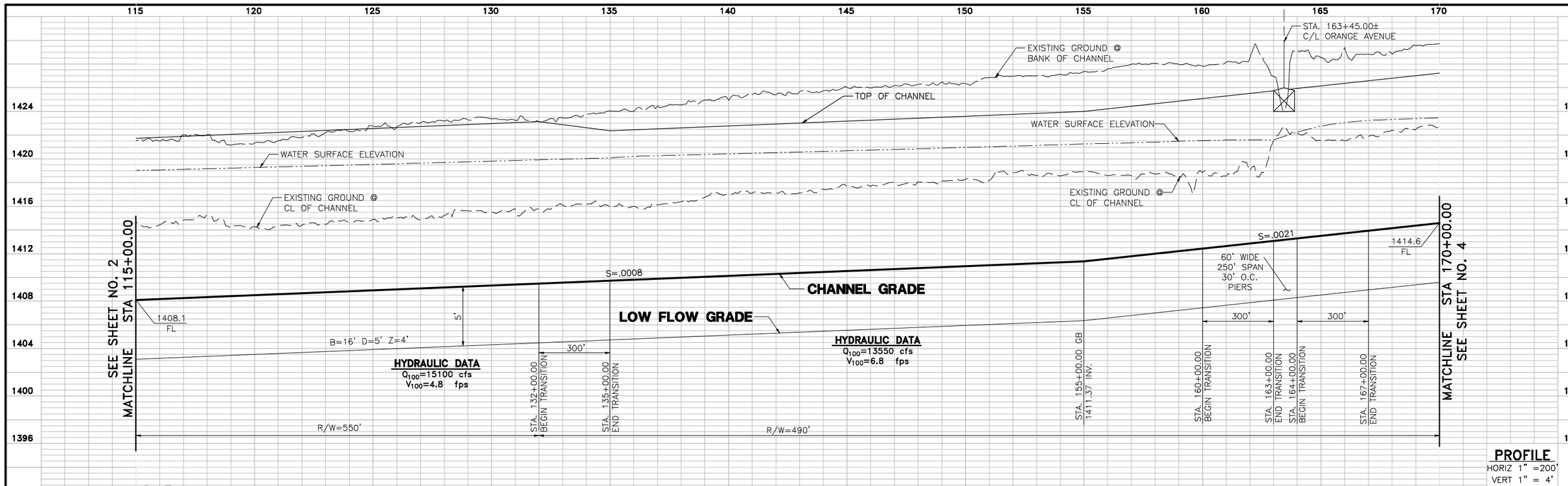

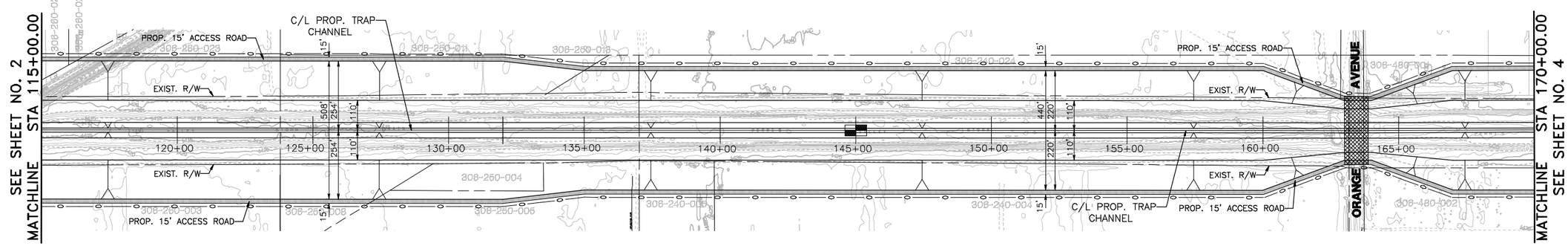

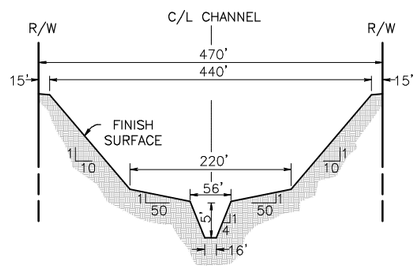

STA. 145+00.00

SCALE: 1" = 100'

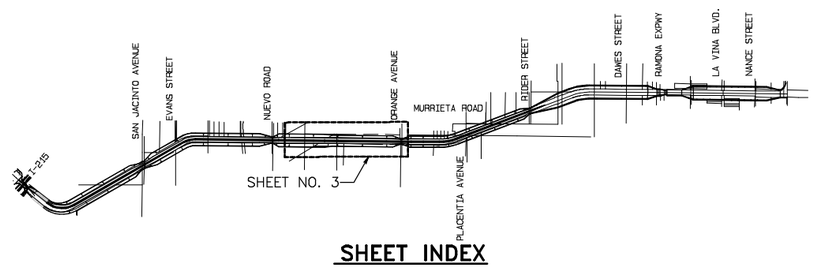

SHEET INDEX

N.T.S.

GRAPHIC SCALE 1"=200'

0 200 400 600

N

G:\2003\03-0451\Dwg\Pro\PVSD.prn8/8/2006

UNDERGROUND SERVICE ALERT
CALL: TOLL FREE
1-800
227-2600
TWO WORKING DAYS BEFORE YOU DIG

PERRIS VALLEY STORM DRAIN
ALTERNATIVE 5

SEAL

REGISTERED PROFESSIONAL ENGINEER
SCOTT R. HILDEBRAND
NO. C44762
EXP. 3-31-08
CIVIL
STATE OF CALIFORNIA

ALBERT A. WEBB ASSOCIATES
ENGINEERING CONSULTANTS
3788 McCRAY STREET, RIVERSIDE, CA 92506
PH. (951) 686-1070 FAX (951) 788-1256

APPROVED BY: _____ DATE: _____

R.C.E. NO. C44762 EXP. DATE: 3-31-08

DESIGNED BY:
DRAWN BY: D.V.A.J.
CHECKED BY: SRH

REVISIONS			
REF.	DESCRIPTION	APPR.	DATE

PRELIMINARY PROFILE
PERRIS VALLEY STORM DRAIN
ALTERNATIVE 5

PROJECT NO. 03-0451

DRAWING NO. ALTERNATIVE 5

SHEET NO. 3 OF 6

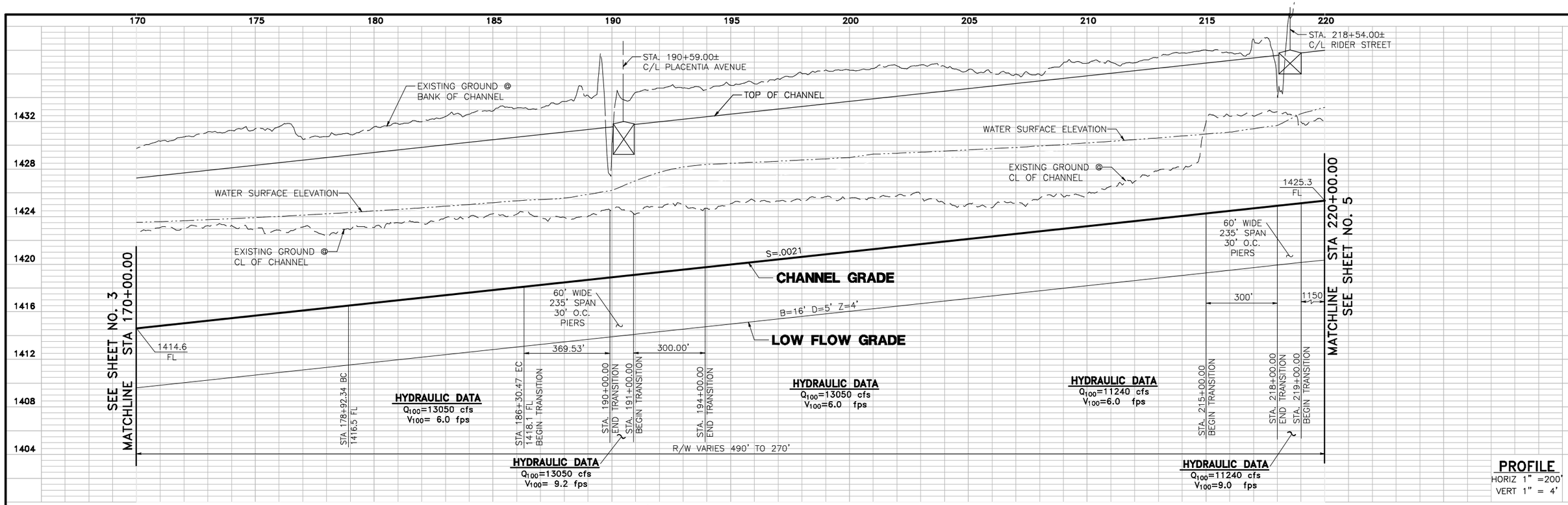

PROFILE
HORIZ 1" =200'
VERT 1" = 4'

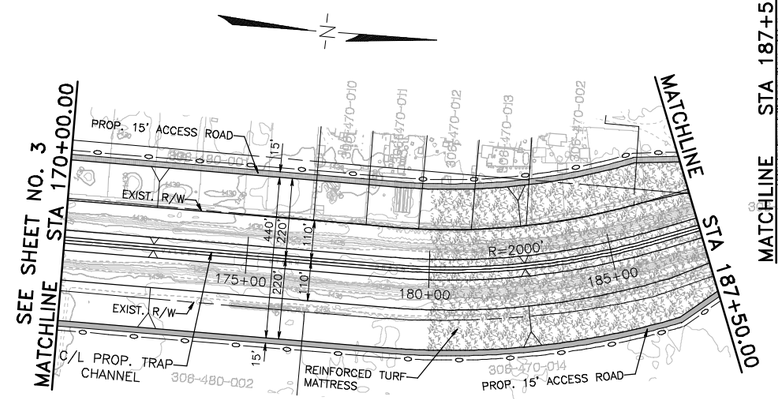

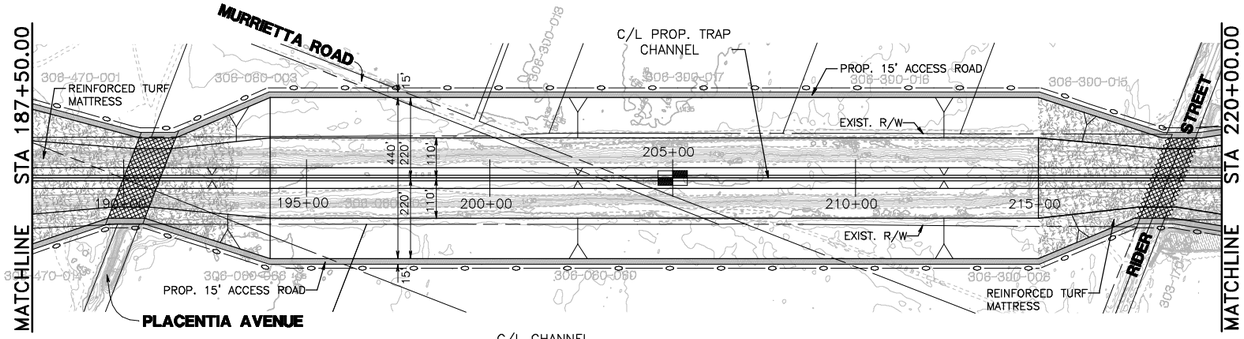

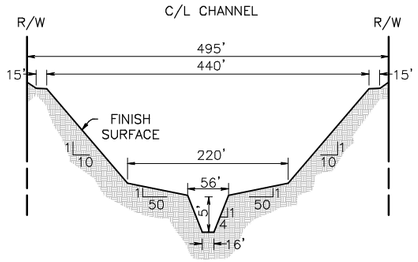

STA. 205+00.00
SCALE: 1" = 100'

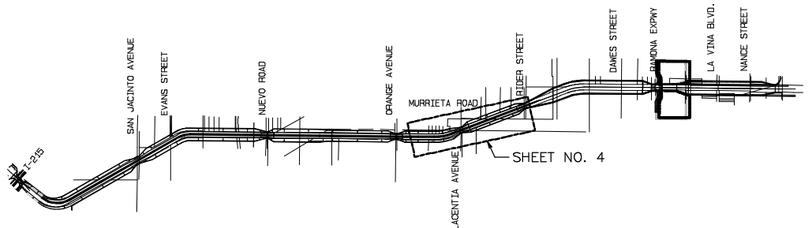

SHEET INDEX
N.T.S.

GRAPHIC SCALE 1"=200'
0 200 400 600

G:\2003\03-0461\Dwg&Prts\PVSD prof6/16/2009

UNDERGROUND SERVICE ALERT
CALL: TOLL FREE
1·800
227·2600
TWO WORKING DAYS BEFORE YOU DIG

PERRIS VALLEY STORM DRAIN
ALTERNATIVE 5

SEAL
REGISTERED PROFESSIONAL ENGINEER
SCOTT R. HILDEBRAND
NO. C44762
EXP. 3-31-10
CIVIL
STATE OF CALIFORNIA

ALBERT A. WEBB ASSOCIATES
ENGINEERING CONSULTANTS
3788 McCRAY STREET, RIVERSIDE, CA 92506
PH. (951) 686-1070 FAX (951) 788-1256

APPROVED BY: DATE:
R.C.E. NO. C44762 EXP. DATE: 3-31-08
DESIGNED BY:
DRAWN BY: D.V.A.J.
CHECKED BY: SRH

REF.	REVISIONS	APPR.	DATE

PRELIMINARY PROFILE
PERRIS VALLEY STORM DRAIN
ALTERNATIVE 5

PROJECT NO. 03-0461
DRAWING NO. ALTERNATIVE 5
SHEET NO. 4 OF 6

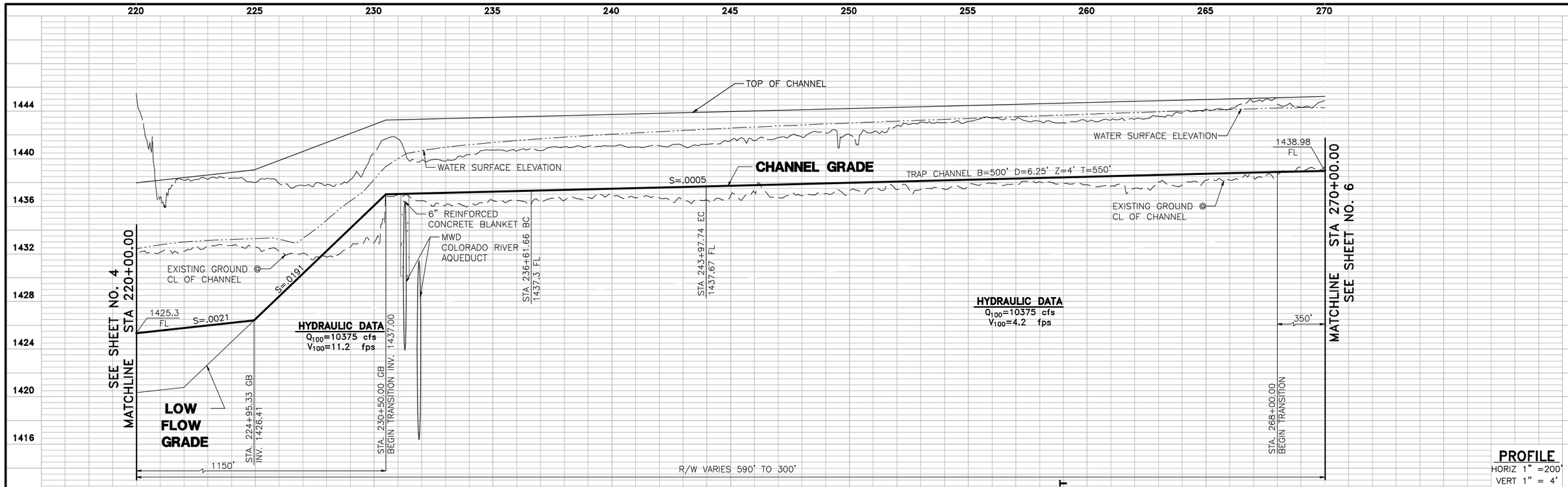

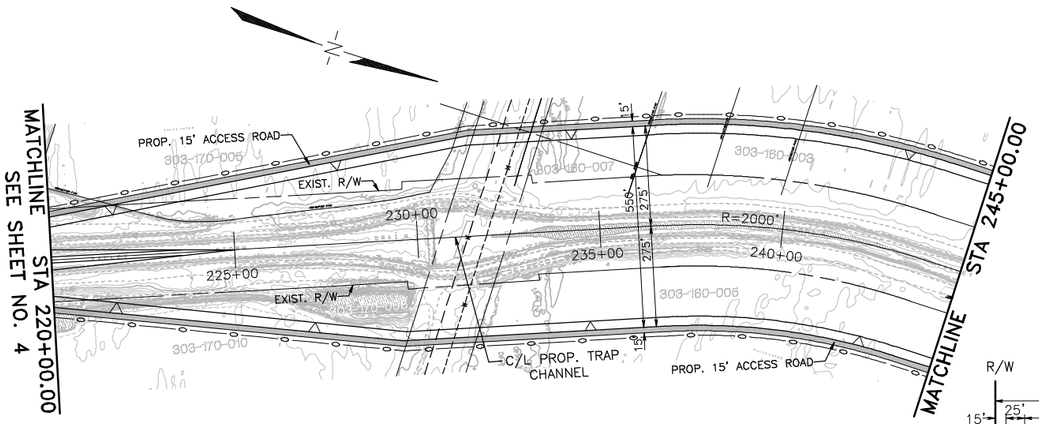

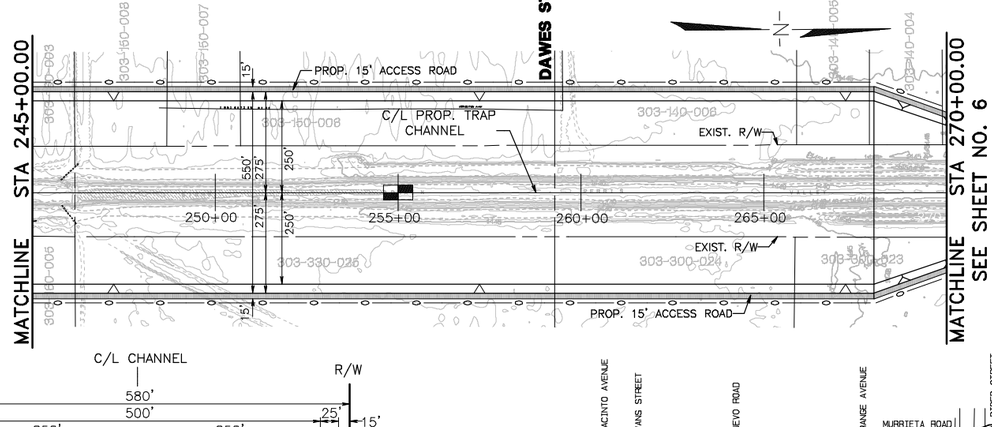

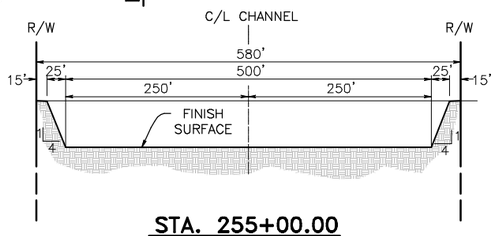

STA. 255+00.00
SCALE: 1" = 100'

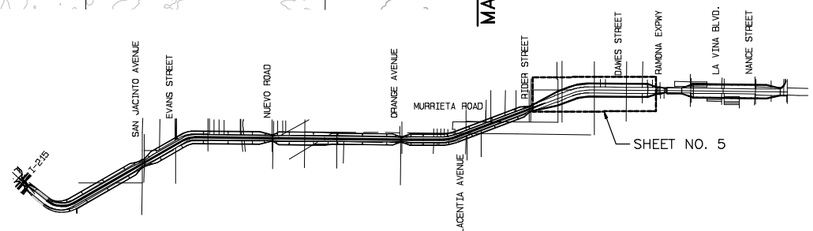

SHEET INDEX
N.T.S.

GRAPHIC SCALE 1"=200'
0 200 400 600

G:\2003\03-0451\Dwg\Pro\PVSD.prn8/8/2006

UNDERGROUND SERVICE ALERT
CALL: TOLL FREE
1-800
227-2600
TWO WORKING DAYS BEFORE YOU DIG

PERRIS VALLEY STORM DRAIN
ALTERNATIVE 5

SEAL
REGISTERED PROFESSIONAL ENGINEER
SCOTT R. HILDEBRAND
NO. C44762
EXP. 3-31-08
CIVIL
STATE OF CALIFORNIA

ALBERT A. WEBB ASSOCIATES
ENGINEERING CONSULTANTS
3788 McCRAY STREET, RIVERSIDE, CA 92506
PH. (951) 686-1070 FAX (951) 788-1256

APPROVED BY: DATE:
R.C.E. NO. C44762 EXP. DATE: 3-31-08
DESIGNED BY:
DRAWN BY: D.V.A.J.
CHECKED BY: SRH

REF.	REVISIONS	APPR.	DATE

PRELIMINARY PROFILE
PERRIS VALLEY STORM DRAIN
ALTERNATIVE 5

PROJECT NO. 03-0451
DRAWING NO. ALTERNATIVE 5
SHEET NO. 5 OF 6

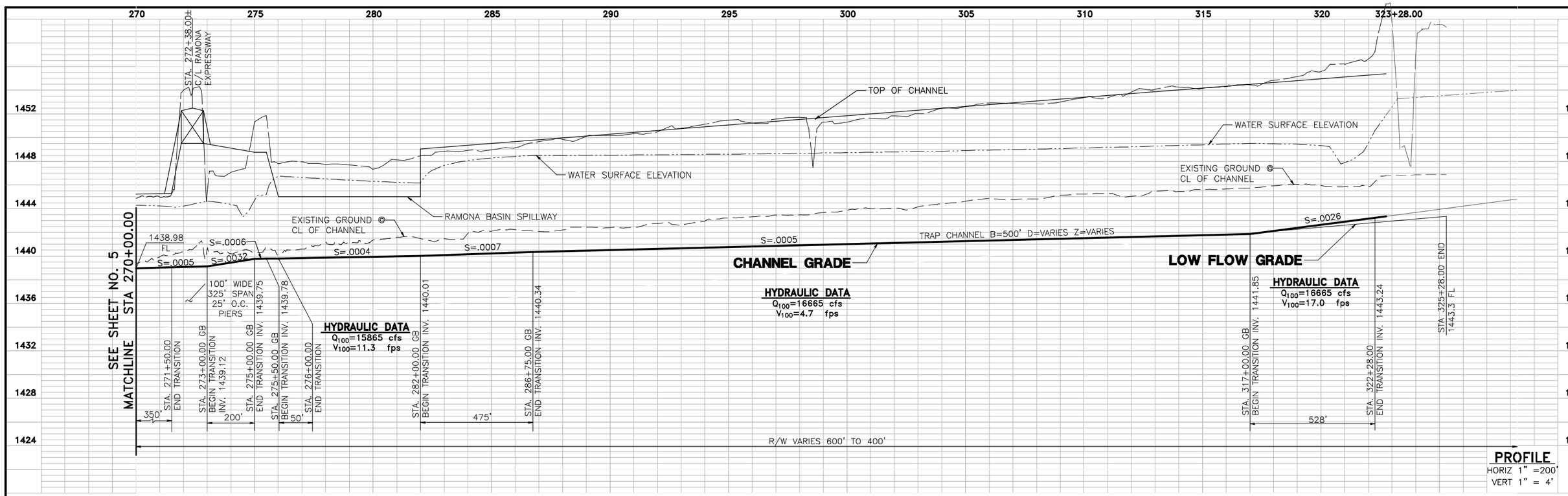

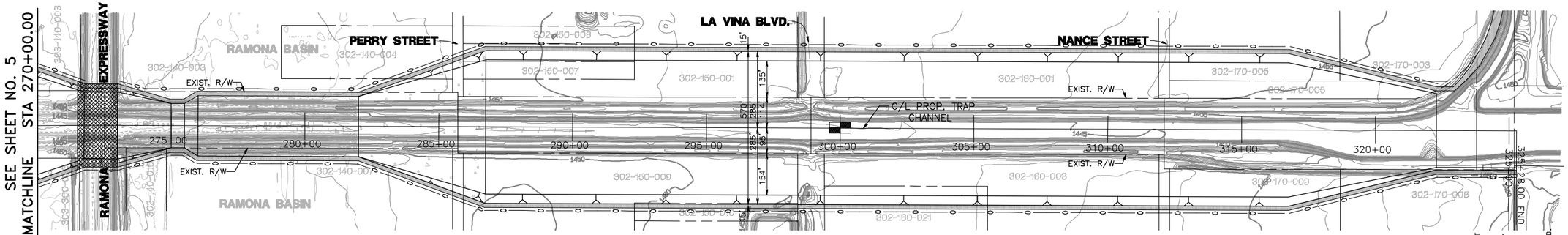

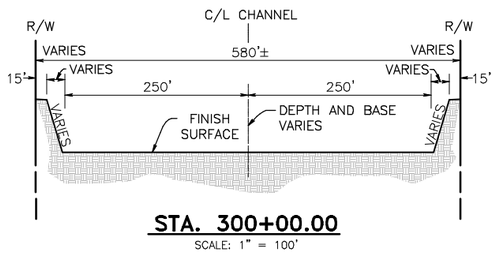

STA. 300+00.00
SCALE: 1" = 100'

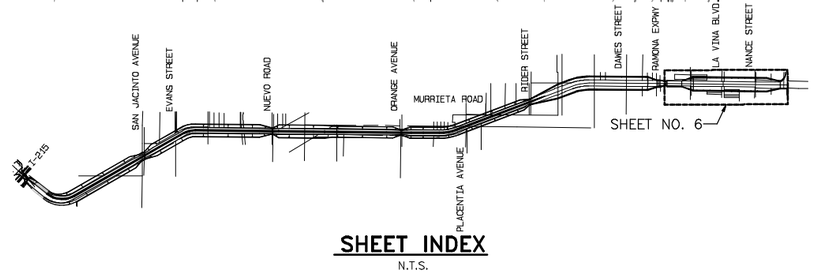

SHEET INDEX
N.T.S.

GRAPHIC SCALE 1"=200'
0 200 400 600

G:\2003\03-0451\Dwg\Pro\PVS0.prn8/8/2006

UNDERGROUND SERVICE ALERT
CALL: TOLL FREE
1-800
227-2600
TWO WORKING DAYS BEFORE YOU DIG

PERRIS VALLEY STORM DRAIN
ALTERNATIVE 5

SEAL
REGISTERED PROFESSIONAL ENGINEER SCOTT R. HILDEBRAND NO. C44762 EXP. 3-31-08 CIVIL STATE OF CALIFORNIA

ALBERT A. WEBB ASSOCIATES ENGINEERING CONSULTANTS
3788 McCRAY STREET, RIVERSIDE, CA 92506
PH. (951) 686-1070 FAX (951) 788-1256

APPROVED BY: DATE:
R.C.E. NO. C44762 EXP. DATE: 3-31-08
DESIGNED BY:
DRAWN BY: D.V.A.J.
CHECKED BY: SRH

REF.	REVISIONS	APPR.	DATE

PRELIMINARY PROFILE
PERRIS VALLEY STORM DRAIN
ALTERNATIVE 5

PROJECT NO. 03-0451
DRAWING NO. ALTERNATIVE 5
SHEET NO. 6 OF 6