BRADLEY CANYON FARMS LLC

1255 TIERRA REDONDA RD
BRADLEY, CA 93426
APNs: 080-021-051,
080-021-052

VICINITY MAP

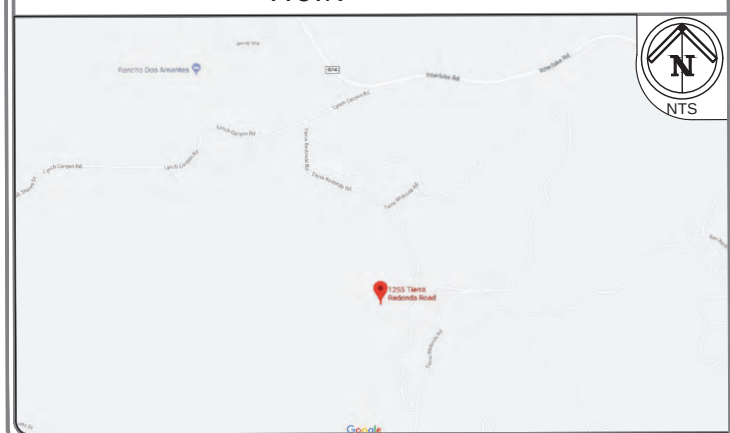

SCOPE OF WORK:

0.98 Acres Outdoor Cultivation Canopy in Existing Hoop Houses
5,376 SF Outdoor Nursery Canopy in Existing Hoop Houses
2,400 SF Indoor Nursery in Existing Workshop Building
320 SF Pesticide Storage
320 SF Nutrition Storage

SHEET INDEX:

G-001	TITLE SHEET
A-001	SITE PLAN
A-002	DETAILED SITE PLAN
A-003	IRRIGATION & WATER TANK DETAIL
FQ-101	HOOP HOUSE INTERIOR (WORK & EQUIPMENT CLEARANCE)
FQ-102	SEA STORAGE CONTAINER FLOOR PLANS & ELEVATIONS
S-1	CONFIDENTIAL SECURITY PLAN

PROJECT:
BRADLEY CANYON FARMS LLC
1255 TIERRA REDONDA RD
BRADLEY, CA 93426

DATE: 5/15/2020

SHEET NUMBER:
G-001

OVERALL SITE PLAN

LEGEND

SYMBOL	DESCRIPTION
	(E) SOIL COMPOST SITE
	YELLOW HOOP HOUSE: BLOOMING/FLOWERING
	GREEN HOOP HOUSE: VEGETATIVE PHASE
	BROWN: INDOOR ANCILLARY NURSERY
	(N) SEATRAIN CONTAINER
	(E) DUMPSTER CONTAINER
	(E) PORTABLE RESTROOM
	(E) DIESEL 500 GALLON
MP	(E) MAIN ELECTRICAL PANEL
	WATER TANKS SEE SHEET A-003
	STREAM & DRAINAGE
	STREAM & DRAINAGE 50' SETBACK
	(E) 6' FENCELINE
	(N) 6' CHAIN-LINK FENCE WITH PRIVACY SLATS
	(N) ENTRY GATE INTO FENCED AREA

NOTE: (E) DENOTES EXISTING
(N) DENOTES NEW

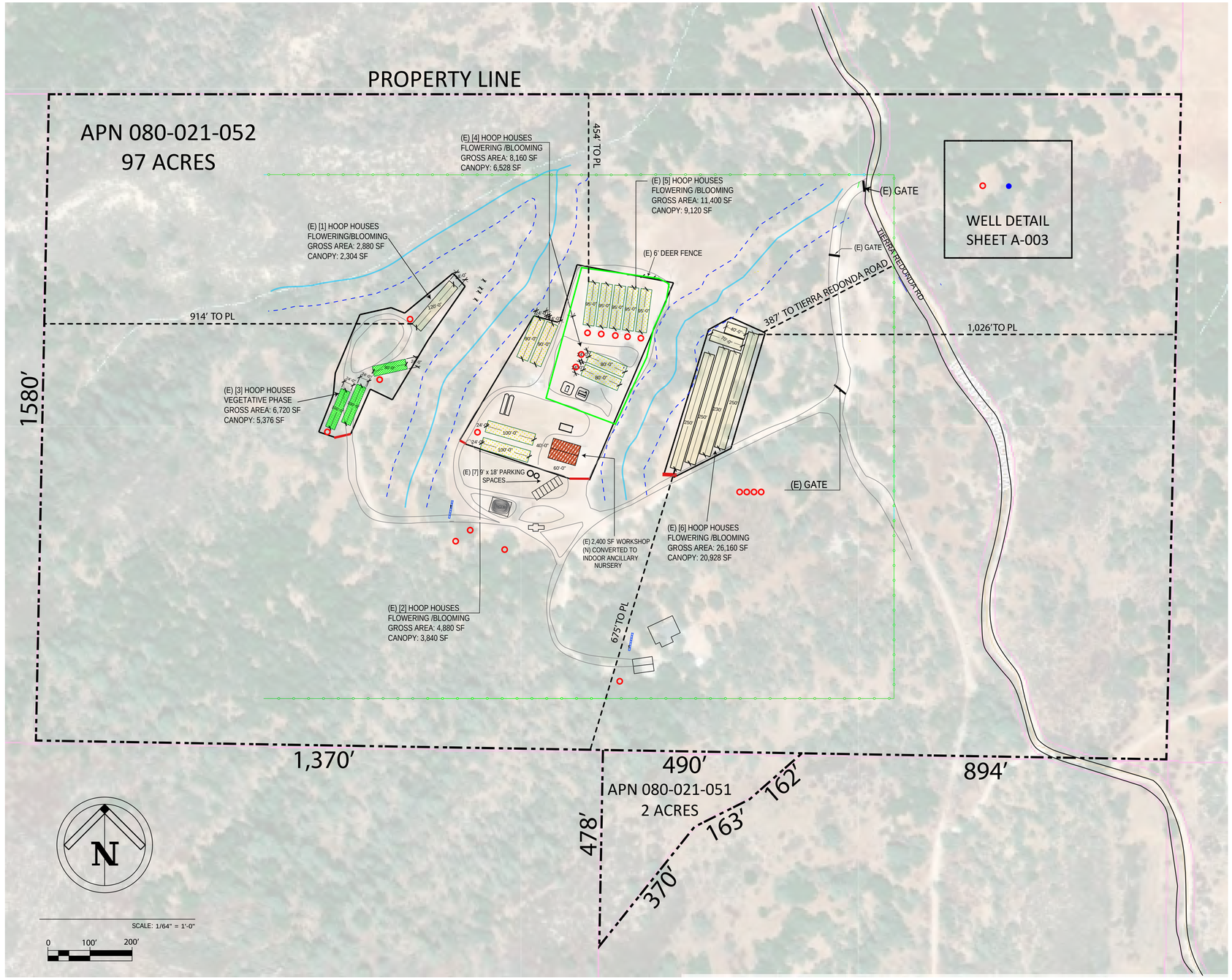

BRADLEY CANYON FARMS LLC

1255 TIERRA REDONDA RD
BRADLEY, CA 93426

PROJECT:

DATE: 5/15/2020

SHEET NUMBER:

A-001

DETAILED SITE PLAN

LEGEND

SYMBOL	DESCRIPTION
	(E) SOIL COMPOST SITE
	YELLOW HOOP HOUSE: BLOOMING/FLOWERING
	GREEN HOOP HOUSE: VEGETATIVE PHASE
	BROWN: INDOOR ANCILLARY NURSERY
	(N) SEATRAIN CONTAINER
	(E) DUMPSTER CONTAINER
	(E) PORTABLE RESTROOM
	(E) DIESEL 500 GALLON
MP	(E) MAIN ELECTRICAL PANEL
	WATER TANKS SEE SHEET A-003
	STREAM & DRAINAGE
	STREAM & DRAINAGE 50' SETBACK
	(E) 6' FENCELINE
	(N) 6' CHAIN-LINK FENCE WITH PRIVACY SLATS
	(N) ENTRY GATE INTO FENCED AREA

NOTE: (E) DENOTES EXISTING
(N) DENOTES NEW

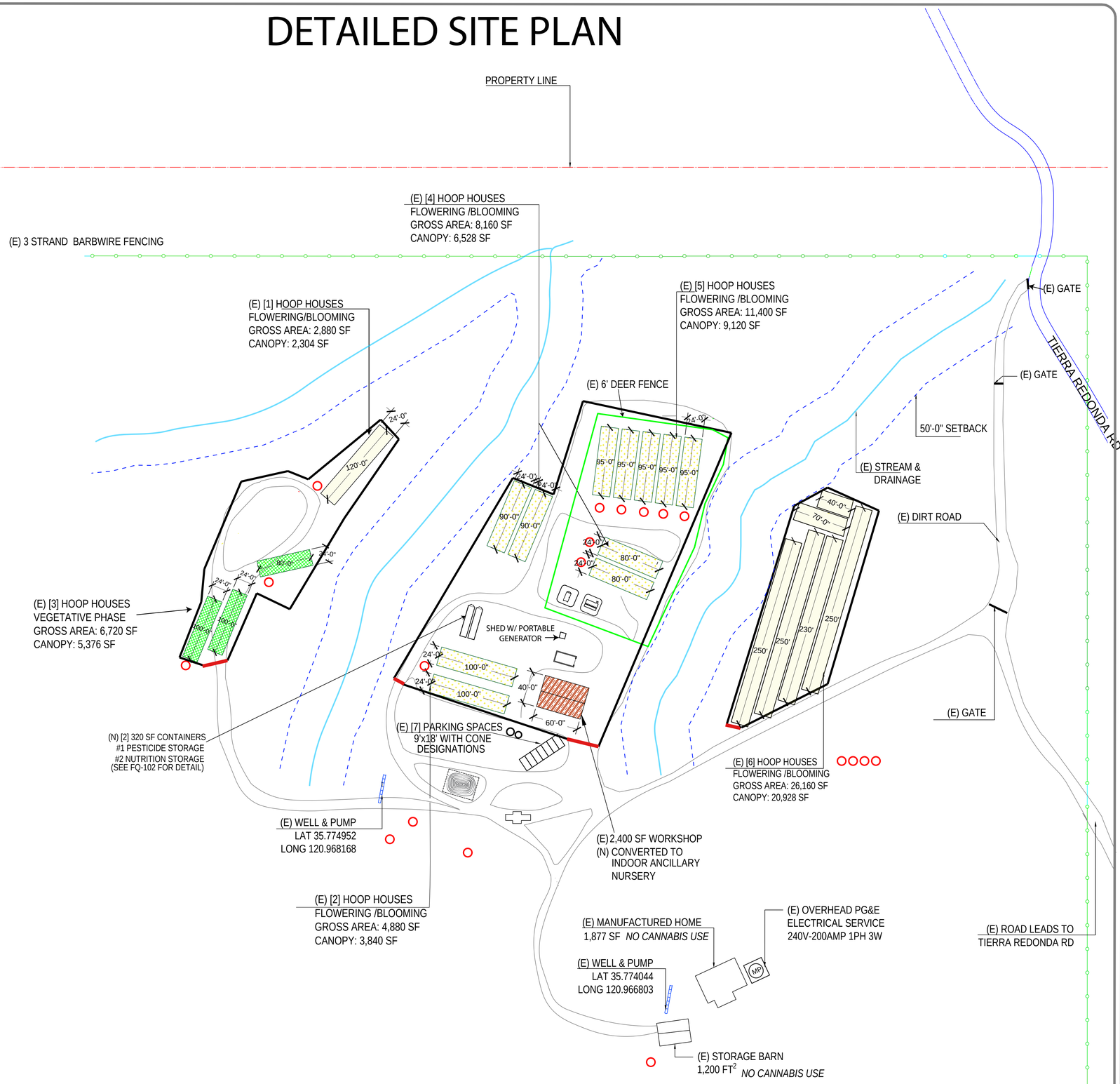

N

SITE PLAN DETAIL A-002

SCALE: 1/64" = 1'-0"

0 100' 200'

BRADLEY CANYON FARMS LLC

1255 TIERRA REDONDA RD
BRADLEY, CA 93426

PROJECT:

DATE: 5/15/2020

SHEET NUMBER:

A-002

IRRIGATION & WATER TANK DETAIL

LEGEND

SYMBOL	DESCRIPTION
	IRRIGATION LINE
	WELL & EXTERIOR PUMP
	10,000 GALLON WATER TANK-PLASTIC
	2,500 - 5,000 GALLON WATER TANK-STEEL
	5,000 GALLON WATER TANK-PLASTIC
	1,000 GALLON WATER TANK-PLASTIC

TOTAL IRRIGATION WATER TANKS:
EXISTING:
(1) 10,000 GALLON-PLASTIC
(10) 5,000 GALLON-PLASTIC
(2) 1,000 GALLON-PLASTIC
13 TOTAL
NEW:
(8) 5,000 GALLON-PLASTIC
8 TOTAL

TOTAL: 21

STEEL FIRE WATER STORAGE TANKS:
(E)(1) 2,500 GALLON & (N)(1) 5,000 GALLON

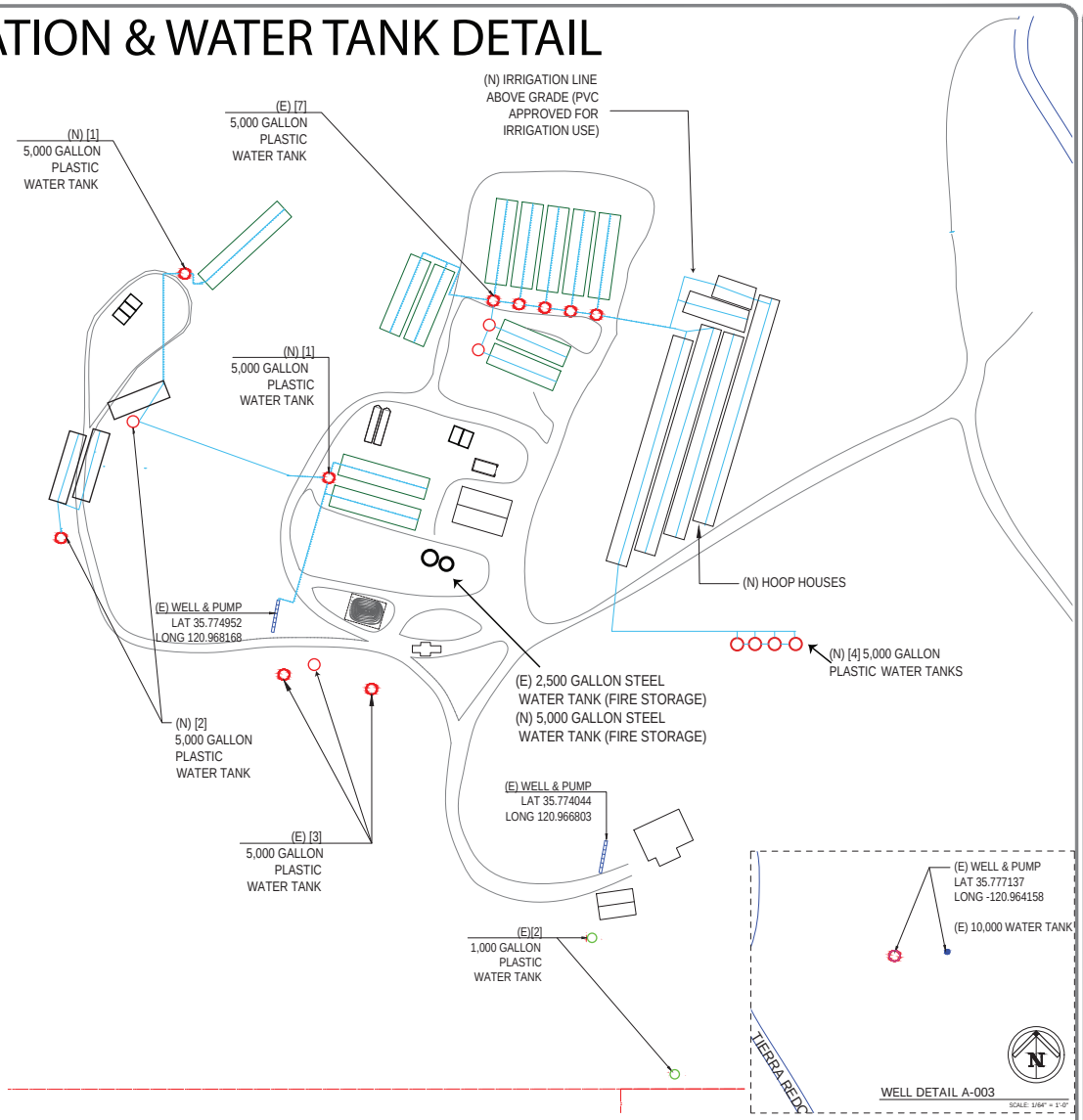

IRRIGATION PLAN DETAIL A-003

SCALE: 1/64" = 1'-0"

0 100' 200'

BRADLEY CANYON FARMS LLC

1255 TIERRA REDONDA RD
BRADLEY, CA 93426

PROJECT:

DATE: 5/15/2020

SHEET NUMBER:

A-003

HOOP HOUSE INTERIOR/FLOOR PLAN

* THE SAME HOOP HOUSE WILL BE USED FOR OUTDOOR CULTIVATION AND OUTDOOR NURSERY

HOOP HOUSE SIZE - 100′ x 24′ = 2,400 SF *(will vary depending on hoop house length)*
CANOPY = 1,920 SF
WALKING & EQUIPMENT = 480 SF (25% OF CANOPY)

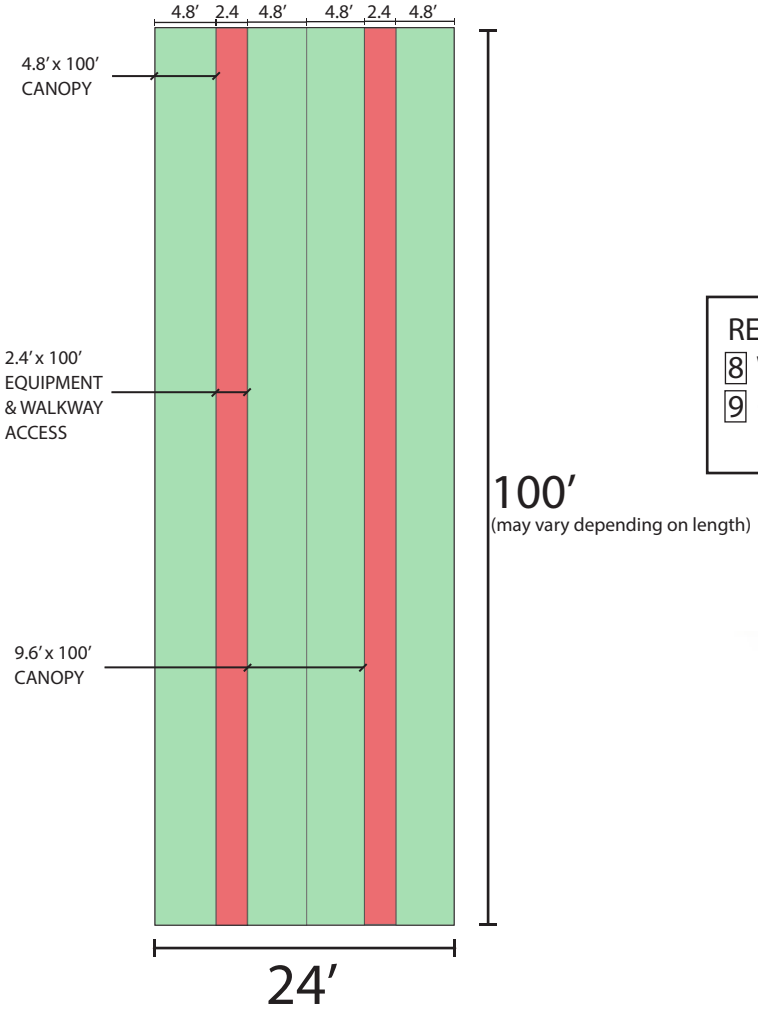

Structure Type	Use	Size	Count	Total SF	Walkway SF	Canopy SF
Hoop House	Outdoor Cultivation: Flowering	40' x 24'	1	960	192	768
		70′ x 24′	1	1,680	336	1,344
		80′ x 24′	2	3,840	768	3,072
		90′ x 24′	2	4,320	864	3,456
		95′ x 24′	5	11,400	2,280	9,120
		100′ x 24′	2	4,800	960	3,840
		120′ x 24′	1	2,880	576	2,304
		230′ x 24′	1	5,520	1,104	4,416
		250′ x 24′	3	18,000	3,600	14,400
	TOTAL		**18**	**53400**	**10680**	**42720**
	Outdoor Ancillary Nursery	80′ x 24′	1	1,920	384	1,536
		100′ x 24′	2	4,800	960	3,840
	TOTAL		**3**	**6720**	**1344**	**5376**
AG Barn	Indoor Nursery	40′ x 60′	1	2,400	n/a	2,400
TOTAL Nursery				**9,120**	**1,344**	**7,776**

Note: All hoop houses are existing.

REFERENCE NOTES AND COLOR:
8 WHITE HOOP HOUSE FILM
9 GRAY 14-GAUGE 1.66″ O.D. PIPE

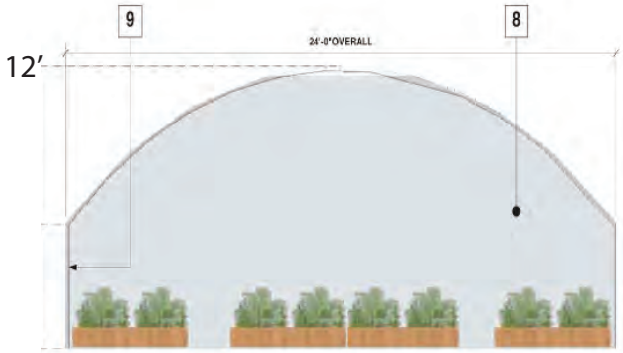

HOOP HOUSE FRONT ELEVATION



HOOP HOUSE SIDE ELEVATION

BRADLEY CANYON FARMS LLC

1255 TIERRA REDONDA RD
BRADLEY, CA 93426

PROJECT:

DATE: 5/15/2020

SHEET NUMBER:
FQ-101

Seatrains & Other Containers: Floor Plans & Elevations

DIESEL STORAGE ELEVATION

(N) 500 GALLON DIESEL WELDED ON STEEL BEAMS & ELEVATED



USE: REFIL EQUIPMENT ONSITE
COLOR: EARTH TONE
MATERIALS: METAL

SEATRAIN CONTAINER FLOOR PLANS

* ALL SEATRAINS WILL BE EARTH TONE COLOR

* THERE WILL BE NO CANNABIS STORAGE AREA

* THERE ARE NO LOCKED AREAS WITHIN THE STRUCTURES

DOUBLE DOORS (LOCKABLE, TYPICAL)

#1 SEA TRAIN USE PURPOSE:
FOR NUTRITION, PESTICIDE, FERTILIZER STORAGE IN CONTAINER'S
(SEE BULK CONTAINER DETAILS)

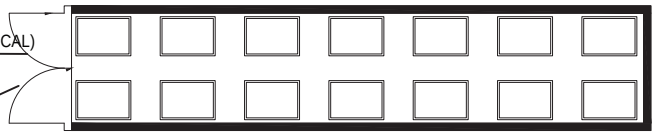

BULK CONTAINER DETAILS

USE: SECONDARY CONTAINMENT FOR PESTICIDE, FERTILIZERS, ETC.
LOCATED WITHIN SEATRAIN
COLOR: WHITE

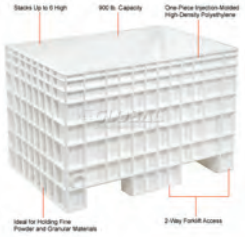

STACKS (6 HIGH MAX)

900 lb. CAPACITY

FDA APPROVED
SEAMLESS, IMPACT-RESISTANT ONE-PIECE INJECTION MOLDED CONSTRUCTION OF STRUCTURAL-FOAM HIGH-DENSITY INDUSTRIAL GRADE POLYMER

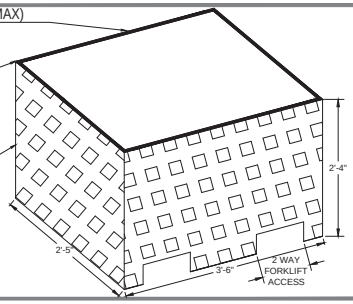

SEATRAIN ELEVATION FOR ALL STORAGE

COLOR: EARTH TONE
MATERIAL: METAL

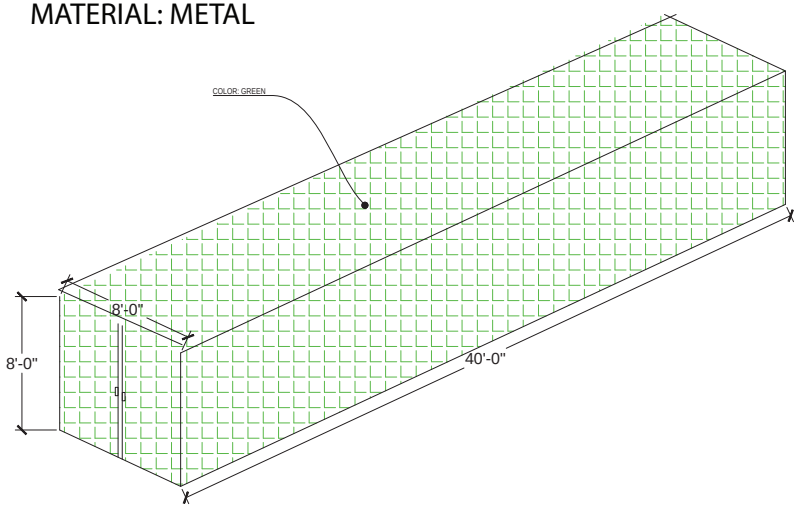

WASTE DUMPSTER DIMENSIONS
SCALE: 1/4" = 1'-0"

USE: TRASH (NON-COMPOSTABLE)
COLOR: EARTH TONE
MATERIALS: METALT

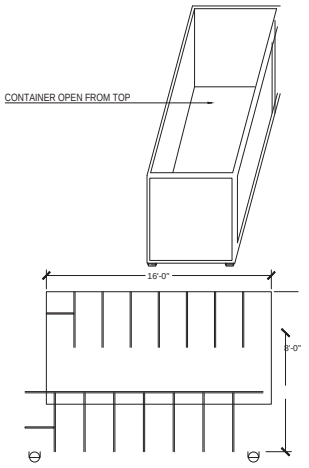

PROJECT:
BRADLEY CANYON FARMS LLC

1255 TIERRA REDONDA RD
BRADLEY, CA 93426

DATE: 5/15/2020

SHEET NUMBER:
FQ-102