TRAFFIC IMPACT STUDY
FOR THE JEFF HOTEL PROJECT PROPOSED AT
11469 JEFFERSON BOULEVARD, CULVER CITY

Prepared for:

CITY OF CULVER CITY

AND

SANDSTONE PROPERTIES, INC.

Prepared by:

Crain & Associates
300 Corporate Pointe, Suite 470
Culver City, California 90230
(310) 473-6508

October 19, 2020

EXECUTIVE SUMMARY

Sandstone Properties Incorporated is proposing the development of a boutique hotel located at 11469 Jefferson Boulevard in the City of Culver City (the "Project"). Situated at the northwest corner of the intersection of Jefferson Boulevard and Slauson Avenue, the Project consists of a hotel, with a maximum of 175 rooms as well as 3,400 square feet of supporting restaurant space (including 500 square feet of outdoor dining area), a 7,000 square-foot lounge, a 5,100 square-foot rooftop bar, and 4,800 square feet of conference/meeting room space, for a total floor area of approximately 111,000 square feet. The restaurant, lounge, rooftop bar, and meeting room space would primarily serve hotel patrons, and would exist as internal components of the hotel, not as independent establishments.

Located at the northwest corner of Jefferson Boulevard and Slauson Avenue, the Project is situated within the Sunkist Park community of Culver City. The Project site is generally bounded by Jefferson Boulevard to the east, an unnamed service alley to the west, low-density commercial development to the north, and Slauson Avenue to the south.

The Project is anticipated to be completed in 2024. Upon completion, the Project is estimated to generate approximately 1,087 net daily trips, including 72 net AM peak-hour trips and 67 net PM peak-hour trips.

Parking for the Project would be provided on two subterranean parking levels, with a total of 138 parking spaces that would be accommodated through a combination of standard, ADA accessible, and tandem spaces. The Project site would include valet-assist parking on both subterranean parking levels in order to maintain safe and efficient use of the tandem spaces. The Project site would be accessed by dual entry lanes from westbound Slauson Avenue. The drive aisle closer to the hotel would serve as a passenger drop-off and pick-up area. The

second drive aisle would allow entering vehicles to access the parking ramp down to the two subterranean parking levels. Access to the subterranean parking garage would not be gate controlled. There would be two Project driveway exits onto the adjacent unnamed alley to egress onto the surrounding roadway system. One exit driveway would be provided directly off of the dual drive aisles (which would merge into a single aisle approaching the alley), while the second exit would provide egress for vehicles exiting the subterranean parking garage. Exiting vehicles would be allowed to travel north or south along the unnamed alley toward Berryman Avenue or Slauson Avenue, respectively.

The traffic study presented herein analyzes existing (2018) and future (2024) AM and PM peak-hour traffic conditions at seven critical intersections and three residential street segments in the vicinity of the Project site. The analysis of cumulative traffic conditions accounts for the development of 32 potential related projects in the surrounding area. The Project is expected to have one significant traffic impact at the intersection of Jefferson Boulevard & I-405 Freeway Northbound Ramps under the existing and future conditions. There would be no significant residential street segment impacts. Mitigation measures have been identified and approved by the City of Los Angeles Department of Transportation (LADOT) that will reduce the significant traffic impact at Jefferson Boulevard & I-405 Freeway Northbound Ramps to a less-than-significant level. These mitigation measures include the implementation of a Transportation Demand Management (TDM) plan for the Project to promote alternative travel mode usage and the installation of a traffic signal system upgrade at the significantly impacted intersection (low-mounted, CCTV camera to improve signal operations). Finally, in order to address concerns that the Sunkist Park neighborhood residents have regarding existing cut-through traffic and parking issues, the incorporation of Project features such as weekday peak-period

turn restrictions and/or the potential expansion of the residential permit parking program have been considered.

Project traffic impacts were also analyzed at Congestion Management Program (CMP) monitoring locations. No significant regional traffic impacts were determined for the CMP monitoring intersections or freeway locations. In addition, the Project's impacts on the public transit system were analyzed based on existing available transit capacity. No significant transit impacts were identified.

The Project's potential impact on bicycle access was also evaluated. Bicycle access impact evaluation is a recent requirement of the City of Culver City. It was determined that the Project would neither affect the ability of the City of Culver City or the adjacent jurisdiction, the City of Los Angeles, to implement their bicycle plans nor result in bicycle access impacts.

Queuing analyses were conducted to supplement the traffic impact analysis at the request of the City and based on community concerns. There are existing queuing concerns on eastbound Slauson Avenue, approaching Jefferson Boulevard, and for the northeastbound Jefferson Boulevard left-turn lane at Slauson Avenue, to which the Project is anticipated to contribute inbound vehicle trips. The City of Culver City has requested that the northeastbound left-turn lane at Jefferson Boulevard & Slauson Avenue be redesigned to provide dual left-turn lanes to reduce potential spillover into the adjacent northeastbound through lane. A conceptual design has been developed in coordination with the City. Queuing associated with inbound Project traffic at the dual entry lanes from Slauson Avenue was also evaluated, and no potential spillover impacts are anticipated on westbound Slauson Avenue.

Finally, per the requirements of Senate Bill (SB) 743, all California Environmental Quality Act (CEQA) lead agencies must analyze a land use development project's transportation impacts

using the vehicle miles traveled (VMT) performance metric starting on July 1, 2020. Therefore, a VMT analysis has been prepared for the Project, per the guidance in City's *Transportation Study Criteria and Guidelines* (adopted by the City Council on July 13, 2020). Given that the Project is located within a key Transit Priority Area within the City, the Project is presumed to have a less-than-significant VMT impact and no further VMT analysis is required.

TABLE OF CONTENTS

	Page
Introduction	1
Project Description	5
Environmental Setting	8
Existing Freeways	9
Existing Highways and Streets	9
Existing (2018) Traffic Volumes	12
Existing Public Transportation	13
Analysis of Existing (2018) Traffic Conditions	19
Project Traffic	25
Project Trip Generation	25
Project Trip Distribution and Assignment	29
Project Parking and Access	30
Project Bicycle Access	38
Existing With Project Traffic Conditions	42
Future Traffic Conditions	45
Ambient Traffic Growth	45
Related Projects	45
Future Highway System Improvements	53
Analysis of Future (2024) Traffic Conditions	54
Significant Traffic Impact Criteria	62
Queuing Analyses	63
Congestion Management Program (CMP) Impact Analysis	70
Transit Impact Analysis	72
VMT Analysis	74
Mitigation Measures	77
Transportation Demand Management Plan	77
City of Los Angeles Traffic Signal System Upgrades	84
Other Design Improvements	85
Analysis of Future (2024) With Project Plus Mitigation Traffic Conditions	86
Voluntary Neighborhood Traffic Intrusion and Parking Mitigation Measures	88

Appendix A – Traffic Count Data Sheets
Appendix B – Study Intersection Geometrics & Traffic Control Conditions
Appendix C – CMA LOS Calculation Worksheets
Appendix D – Traffic Study Memorandum of Understanding (signed on March 26, 2019)
Appendix E – Project Parking Demand Analysis
Appendix F – Conceptual Striping Plan – Slauson Avenue and Jefferson Boulevard (in vicinity of Project Site)
Appendix G – Project Loading Area Truck Turn Analysis (WB-50 Design Vehicle)
Appendix H – Waste Management Plan
Appendix I – Related Project Trip Generation Rates and Equations
Appendix J – Synchro Calculation Worksheets

LIST OF FIGURES

Figure		Page
1	Project Site Vicinity and Study Intersections and Residential Street Segments.	2
2	Conceptual Project Site Plan	7
3	Existing (2018) Peak-Hour Traffic Volumes	14
4	Project Area Transit Routes	16
5	Project Trip Distribution Percentages	31
6	Net Project Peak-Hour Traffic Volumes	33
7	City of Culver City Bicycle & Pedestrian Action Plan – Recommended Bicycle Facilities	39
8	City of Los Angeles Mobility Plan 2035 – Bicycle Enhanced Network	41
9	Existing (2018) With Project Peak-Hour Traffic Volumes	43
10	Related Projects Location Map	47
11	Total Related Project Peak-Hour Traffic Volumes	51
12	Future (2024) Without Project Peak-Hour Traffic Volumes	55
13	Future (2024) With Project Peak-Hour Traffic Volumes	58
14	City of Culver City – Transit Priority Areas	76

LIST OF TABLES

Table		Page
1	Critical Movement Volume Ranges for Determining LOS	21
2	Level of Service as a Function of CMA V/C Ratios	22
3	CMA and LOS Summary: Existing (2018) Traffic Conditions	24
4	Project Trip Generation Rates	26
5	Project Trip Generation Summary	28
6	Project Directional Trip Distribution Percentages	29
7	Related Project Locations, Descriptions, and Trip Generations	48
8	CMA and LOS Summary: Existing (2018) and Future (2024) Without and With Project Conditions	60
9	Residential Street Analysis: Existing (2018) and Future (2024) Conditions	61
10	Culver City's Significant Impact Thresholds at Residential Streets	62
11	Jefferson Boulevard – Northeastbound Left-Turn Queuing Summary	65
12	Southbound Approaches of Unnamed Alley, Segrell Way, and Culver Park Drive Queuing/Delay Summary	69
13	Weekday Peak-Hour Transit Services within Project Area	72
14	CMA and LOS Summary: Future (2024) With Project Plus Mitigation Conditions	88

INTRODUCTION

Crain & Associates has prepared this Traffic Impact Study to assess the potential traffic impacts of the proposed The Jeff Hotel project (the "Project") to be located at 11469 Jefferson Boulevard in the City of Culver City. The Project would consist of a five-story, boutique hotel with a maximum of 175 rooms. The Project would also include approximately 3,400 square feet of ancillary restaurant space (including 500 square feet of outdoor dining area), a 7,000 square-foot lounge, a 5,100 square-foot rooftop bar area, and 4,800 square feet of conference/meeting room space, which would serve primarily as amenities for patrons of the hotel. The Project site is presently occupied by the Jefferson Plaza strip mall, which contains approximately 13,301 square feet of retail space which would be demolished to accommodate the Project.

Located at the northwest corner of Jefferson Boulevard and Slauson Avenue, the Project is situated within the Sunkist Park community of Culver City. The Project site is generally bounded by Jefferson Boulevard to the east, an unnamed alley to the west, low-density commercial development to the north, and Slauson Avenue to the south. The location of the Project site is shown in Figure 1, Project Site Vicinity and Study Intersections and Residential Street Segments.

Parking for the Project would be provided on two subterranean parking levels that would accommodate a total of 138 vehicles. The Project site would include valet-assist parking in order to maintain safe and efficient use of the tandem spaces.

The Project site would be accessed by dual entry lanes from westbound Slauson Avenue. The drive aisle closer to the hotel would serve as a hotel patron drop-off and pick-up area. The second drive aisle would allow entering vehicles to access the parking ramp down to the two



FIGURE 1

4/3/2020

FN: JEFFERSON HOTEL CULVER\STUDY-INTS

PROJECT SITE VICINITY AND STUDY INTERSECTIONS
AND RESIDENTIAL STREET SEGMENTS

CRAIN & ASSOCIATES
Transportation Planning
Traffic Engineering
300 Corporate Pointe, Suite 470
Culver City, California 90230
PH (310) 473 6508 F (310) 444 9771
www.crainandassociates.com

subterranean parking levels. Access to the subterranean parking garage would not be gate controlled. There would be two Project driveway exits onto the adjacent unnamed alley to egress onto the surrounding roadway system. One exit driveway would be provided directly off of the dual drive aisles (which would merge into a single aisle approaching the alley), while the second exit would provide egress for vehicles exiting the subterranean parking garage. Exiting vehicles would be allowed to travel north or south along the unnamed alley toward Berryman Avenue or Slauson Avenue, respectively.

This analysis was prepared in accordance with the assumptions, methodologies, and procedures outlined by the City of Culver City and the City of Los Angeles. The analysis is also consistent with the guidelines in the Congestion Management Program (CMP) for Los Angeles County. A total of seven intersections and three residential street segments were analyzed for existing (2018) and future (2024) traffic conditions. These study analysis locations, which comprise the Project study area, are also depicted in Figure 1:

Study Intersections

1. Jefferson Boulevard & Mesmer Avenue
2. Jefferson Boulevard & San Diego Freeway (Interstate 405) Southbound Ramps
3. Jefferson Boulevard & San Diego Freeway (Interstate 405) Northbound Ramps
4. Jefferson Boulevard & Slauson Avenue
5. Slauson Avenue & Sepulveda Boulevard
6. Slauson Avenue & Marina Freeway (State Route 90)
7. Centinela Avenue & Sepulveda Boulevard

Study Residential Street Segments

1. Segrell Way, north of Slauson Avenue
2. Culver Park Drive, north of Slauson Avenue
3. Slauson Avenue, west of Segrell Way

The following traffic conditions have been analyzed: Existing (2018) traffic volumes, Existing (2018) Plus Project traffic volumes, Future (2024) Without Project traffic volumes, and Future (2024) With Project traffic volumes. The analyses of future (2024) conditions include cumulative traffic attributable to ambient growth and related projects within the Project study area.

PROJECT DESCRIPTION

The Project under consideration is a boutique hotel, with a maximum of 175 rooms and approximately 3,400 square feet of ancillary restaurant space (including 500 square feet of outdoor dining), a 7,000 square-foot lounge, a 5,100 square-foot rooftop bar, and 4,800 square feet of conference/meeting room space, that encompasses a total floor area of approximately 111,000 square feet. The restaurant, lounge, rooftop bar, and conference/meeting room space would primarily serve hotel patrons. The Project would employ approximately 80 full-time and 40 part-time employees. The Project site is located at 11469 Jefferson Boulevard, immediately northwest of the intersection of Jefferson Boulevard and Slauson Avenue. The Project site is bordered roughly by Slauson Avenue to the south, an unnamed alley to the west, low-density commercial development to the north, and Jefferson Boulevard to the east.

The Jefferson Plaza strip mall currently occupies the Project site. This one-floor commercial building houses roughly a dozen establishments with an approximate combined total retail floor area of 13,301 gross square feet. Jefferson Plaza would be demolished to make way for the Project.

Parking for the Project would be provided within two subterranean parking levels, with a total proposed supply of 138 parking spaces. The subterranean parking is designed to accommodate 138 vehicles through a combination of standard, ADA accessible, and tandem spaces. This parking supply would be sufficient to meet the anticipated peak parking demands of the Project. The Project site would include valet-assist parking in order to maintain safe and efficient use of the tandem spaces.

The Project site would be accessed by dual entry lanes from westbound Slauson Avenue. The drive aisle closer to the hotel would serve as a hotel patron drop-off and pick-up area. The

second drive aisle would allow entering vehicles to access the parking ramp down to the two subterranean parking levels. Access to the subterranean parking garage would not be gate controlled. There would be two Project driveway exits onto the adjacent unnamed alley to egress onto the surrounding roadway system. One exit driveway would be provided directly off of the dual drive aisles (which merge into a single aisle approaching the alley), while the second exit would provide egress for vehicles exiting the subterranean parking garage. Exiting vehicles would be allowed to travel north or south along the unnamed alley toward Berryman Avenue or Slauson Avenue, respectively. The Conceptual Project Site Plan is shown in Figure 2.



FIGURE 2

4/3/2020

FN: JEFFERSON HOTEL CULVER\SITE PLAN

CONCEPTUAL PROJECT SITE PLAN

CRAIN & ASSOCIATES
Transportation Planning
Traffic Engineering
300 Corporate Pointe, Suite 470
Culver City, California 90230
PH (310) 473 6508 F (310) 444 9771
www.crainandassociates.com

ENVIRONMENTAL SETTING

The Project site is located at the northwest corner of Jefferson Boulevard and Slauson Avenue. Situated at the eastern edge of the Sunkist Park neighborhood of Culver City, the Project site is generally bounded by Jefferson Boulevard to the east, an unnamed alley to the west, low-density commercial development to the north, and Slauson Avenue to the south.

The Project site is located in an urban environment, surrounded by an assortment of land uses. Local- and regional-serving commercial developments, as well as a modicum of industrial buildings, line the major arterials in the study area. The Sunkist Park neighborhood, primarily consisting of single-family housing, is directly north and west of the Project. Prominent developments in the greater area include the Westfield Culver City mall, the Corporate Pointe office complex (currently being rebranded to Culver Pointe), and the Playa Vista community, located approximately one-third mile southeast, two-thirds mile east, and one mile southwest of the Project site, respectively.

The Project site and surrounding area in the Sunkist Park neighborhood of Culver City are well-served by freeways and surface streets of various classifications. Two Freeways are located near the Project site and provide convenient access to the larger, regional roadway network. In the Project study area, Jefferson Boulevard, Slauson Avenue, Sepulveda Boulevard, and Centinela Avenue are classified as Primary Arteries per the Circulation Element of the Culver City General Plan. In the City of Los Angeles jurisdiction immediately west of the Project site, Sepulveda Boulevard is classified as a Boulevard I, Jefferson Boulevard and Centinela Avenue are classified as Boulevard II roadways, and Mesmer Avenue is classified as a Collector Street per the City of Los Angeles Mobility Plan 2035. The Project study area freeways and roadways, depicted previously in Figure 1, are described below in more detail.

Two freeways, described below, provide regional access for the Project site and the surrounding community.

The San Diego Freeway (Interstate 405 [I-405]) is a north-south oriented freeway located less than 1,000 feet west of the Project site. This facility has four to five mainline travel lanes and one HOV lane in each direction. Additional auxiliary lanes are also present between some sets of on- and off-ramps. The San Diego Freeway provides a Westside alternative route to the Harbor Freeway (Interstate 110) and Golden State Freeway (Interstate 5), which traverse through Downtown Los Angeles approximately six to ten miles to the east. The San Diego Freeway has on- and off-ramps in both northbound and southbound directions at Jefferson Boulevard, and a northbound off-ramp at Sepulveda Boulevard.

The Marina Freeway/Expressway (State Route 90 [SR-90]) is located less than 1,000 feet south of the Project site. This east-west freeway/expressway extends from Culver City to Marina Del Rey. This route is designated as a freeway from its eastern terminus at Slauson Avenue to west of Culver Boulevard. From west of Culver Boulevard to its intersection with Lincoln Boulevard, this facility is classified as an expressway. The Marina Freeway/Expressway is generally a six-lane facility between Slauson Avenue and the San Diego Freeway, an eight-lane facility between the San Diego Freeway and Centinela Avenue, and a four-lane facility between Centinela Avenue and Lincoln Boulevard. Access to the Marina Freeway/Expressway is provided at Slauson Avenue, Centinela Avenue, Culver Boulevard, Mindanao Way, and Lincoln Boulevard.

Existing Highways and Streets

In addition to the freeways discussed above, there are a number of surface streets and arterials that serve the Project site. The routes and functionality of these streets are described below.

Sepulveda Boulevard runs north-south, generally paralleling the San Diego Freeway. Just south of Westchester Parkway, Sepulveda Boulevard becomes Pacific Coast Highway (State Route 1), south to Artesia Boulevard in Manhattan Beach. This roadway traverses underneath Los Angeles International Airport ("LAX") and continues north through Culver City and West Los Angeles. Farther north, it crosses the Santa Monica Mountains and the San Fernando Valley, where it terminates at Rinaldi Street. In the segments extending north of Machado Road (near Sawtelle/Jefferson Boulevards), Sepulveda Boulevard is a four-lane facility with left-turn channelization at most intersections. South of Machado Road, at its intersection with Jefferson Boulevard/Playa Street, Sepulveda Boulevard provides three northbound and three southbound through lanes, with full left-turn channelization and a southbound right-turn-only lane. Continuing south of Jefferson Boulevard, Sepulveda Boulevard generally maintains six through lanes and has dual left-turn channelization at both study intersections (and northbound and southbound right-turn-only lanes at Centinela Avenue).

Slauson Avenue generally provides east-west service with four to six travel lanes. Slauson Avenue begins as a Local Street at Culver Boulevard, about one-third mile west of the San Diego Freeway. Slauson Avenue does not bridge Ballona Creek but resumes just to the south, again as a Local Street. After Slauson Avenue crosses Jefferson Boulevard, it becomes a more prominent roadway, designated as a Primary Artery by the City of Culver City. East of Culver City, Slauson Avenue continues as an Avenue II roadway in the City of Los Angeles, traveling continuously to its eastern terminus in Whittier. Slauson Avenue features left-turn channelization at major intersections, and right-turn channelization at select locations. Near the Project site, parking is generally permitted on Slauson Avenue west of Jefferson Boulevard, and generally prohibited east of Jefferson Boulevard.

Mesmer Avenue runs from Culver Drive near Ballona Creek to Centinela Avenue. Designated a

Collector Street within the City of Los Angeles, Mesmer Avenue is relatively short, measuring roughly one mile from end to end. Between Jefferson Boulevard and Centinela Avenue, Mesmer Avenue generally has two lanes in each direction. This roadway is traffic signal-controlled at its intersection with Jefferson Boulevard.

Jefferson Boulevard begins at Culver Boulevard in the Playa Del Rey area of the City of Los Angeles, becomes discontinuous through Culver City at Sepulveda Boulevard opposite Playa Street, and resumes approximately 2,000 feet to the north, near Sawtelle Boulevard. At National Boulevard, just beyond the Culver City boundary, the directionality of Jefferson Boulevard changes from northeasterly to easterly. Jefferson Boulevard terminates south of Downtown Los Angeles at Central Avenue. Within the Project study area, Jefferson Boulevard is designated a Boulevard II in Los Angeles and a Primary Artery in Culver City. It generally has two to three lanes in each direction, plus left-turn channelization at intersections. Right-turn-only lanes and raised medians are also featured at select locations along Jefferson Boulevard. Some portions of Jefferson Boulevard provide bicycle lanes; however, there is no bicycle infrastructure along on this roadway near the Project site. On-street parking is generally prohibited on Jefferson Boulevard in the Project vicinity.

Centinela Avenue generally extends in an east-west direction from Florence Avenue in the City of Inglewood north to its intersection with Jefferson Boulevard. The roadway then continues in a north-south alignment to Stanwood Drive in the City of Los Angeles. Centinela Avenue resumes from south of Ocean Park Boulevard and extends discontinuously north to Montana Avenue. Within the Project vicinity, Centinela Avenue is designated both a Boulevard II and Avenue I in Los Angeles, a Primary Artery in Culver City, and a Major Arterial in Inglewood. East of Sepulveda Boulevard, Centinela Avenue generally provides two through lanes in each direction with left- and right-turn channelization at some intersections. West of Sepulveda

Boulevard, Centinela Avenue provides three westbound and four eastbound lanes, a raised median, and left-turn channelization at intersections. North of Jefferson Boulevard, Centinela Avenue generally has two to three lanes in each direction, along with two-way left-turn channelization.

Segrell Way is a north-south roadway located entirely within the Sunkist Park neighborhood for roughly one-half mile between Sawtelle Boulevard to the north and Slauson Avenue to the south. Designed as a Neighborhood Feeder, the roadway provides one lane in each direction with speed humps, and stop controls at all intersections. The roadway is located one block west of the Project site.

Culver Park Drive is a north-south roadway located one block west of Segrell Way in the Sunkist Park neighborhood. This roughly one-half mile Neighborhood Feeder roadway has one lane in each direction between Sawtelle Boulevard to the north and Slauson Avenue to the south, with speed humps, and stop controls at all intersections.

An Unnamed Alley forms the western boundary of the Project site. The alley provides secondary access to many commercial businesses that front Jefferson Boulevard and Sepulveda Boulevard between Slauson Avenue and Machado Road. The alley provides one lane in each direction and is stop-controlled at Slauson Avenue, Berryman Avenue, and northbound at Sawtelle Boulevard. The alley terminates south of Machado Road. The two-way alley has carries an existing (2018) average daily traffic (ADT) volume of 1,305 vehicles (566 vehicles northbound, 739 southbound), north of Slauson Avenue.

Existing (2018) Traffic Volumes

The intersection traffic volumes used in the following analyses were based on new traffic counts conducted in November 2018. The traffic counts were conducted on weekdays during

the peak commute traffic periods of 7:00 to 10:00 AM and 3:00 to 6:00 PM. Existing (2018) AM and PM peak-hour volumes at the study intersections are depicted in Figures 3(a) and 3(b), respectively. The traffic count data summary sheets for each of the study intersections are provided in Appendix A.

Daily machine traffic counts were also conducted in November 2018 for the three study residential street segments. The ADT volumes for the residential street segments are provided in Table 9 on page 61. The daily traffic count data summary sheets are also contained in Appendix A.

Existing Public Transportation

Culver CityBus and the Los Angeles County Metropolitan Transportation Authority ("Metro") provide bus service in the Sunkist Park neighborhood. Most of these lines rendezvous at the Culver City Transit Center, which is located less than 1,000 feet east of the Project site, adjacent to the Westfield Culver City mall. Below is an overview of the current transit service and facilities available within a "reasonable walking distance" (approximately one-quarter mile) of the Project site. Figure 4 shows the Project area transit routes.

CULVER CITYBUS

Line 2 operates northwest-southeast, traveling between Venice and Fox Hills. Near the Project site, Line 2 provides service in both directions with stops at the corner of Slauson Avenue and Sepulveda Boulevard. Line 2 operates on weekdays only, with headways of approximately 60 minutes throughout the day, including AM and PM peak hours.

Line 3 provides north-south service between Century City, Rancho Park, Palms, and Culver City. Northbound and southbound passengers can access Line 3 from the Project

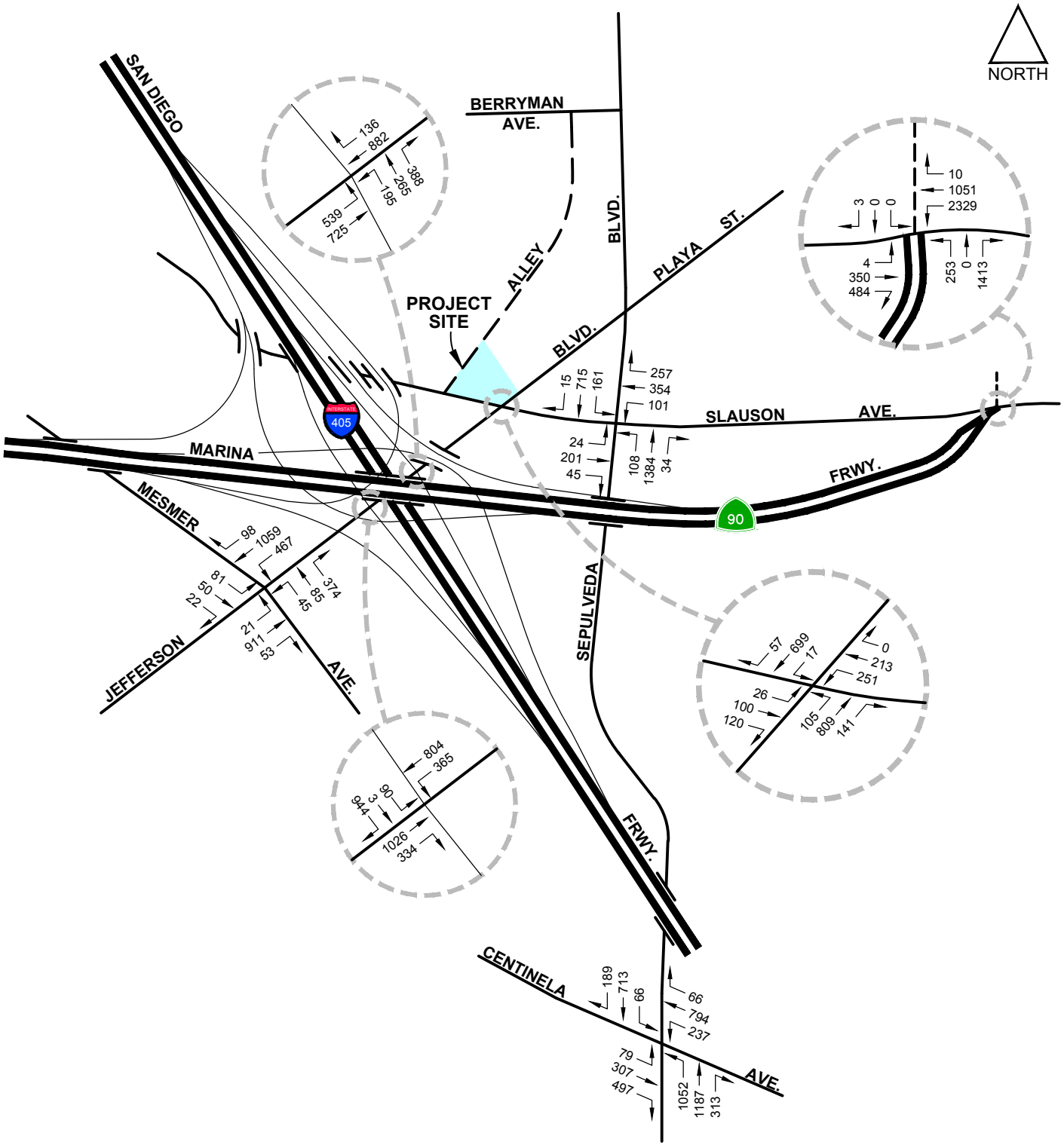

FIGURE 3(a)

9/3/2019

JeffersonHotelCulver\REPORT GRAPHICS20190618\AM2018

EXISTING (2018) TRAFFIC VOLUMES
AM PEAK HOUR

CRAIN & ASSOCIATES
Transportation Planning
Traffic Engineering
300 Corporate Pointe, Suite 470
Culver City, California 90230
PH (310) 473 6508 F (310) 444 9771
www.crainandassociates.com

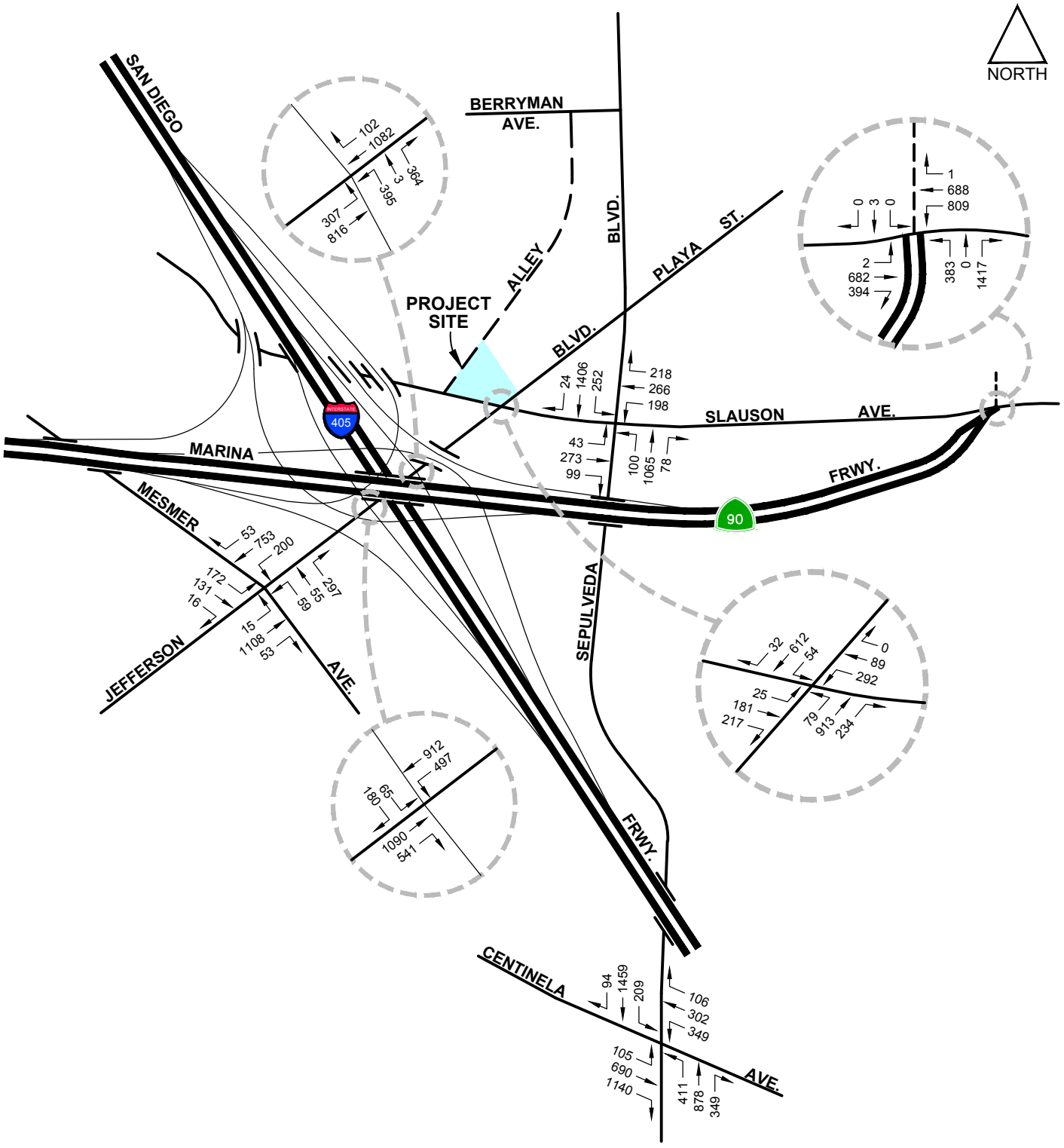

FIGURE 3(b)

9/3/2019

JeffersonHotelCulver\REPORT GRAPHICS20190618\PM2018

EXISTING (2018) TRAFFIC VOLUMES
PM PEAK HOUR

CRAIN & ASSOCIATES
Transportation Planning
Traffic Engineering
300 Corporate Pointe, Suite 470
Culver City, California 90230
PH (310) 473 6508 F (310) 444 9771
www.crainandassociates.com



FIGURE 4

9/3/2019

FN: JEFFERSON HOTEL CULVER\TRANSIT

PROJECT AREA TRANSIT ROUTES

CRAIN & ASSOCIATES
Transportation Planning
Traffic Engineering
300 Corporate Pointe, Suite 470
Culver City, California 90230
PH (310) 473 6508 F (310) 444 9771
www.crainandassociates.com

site via the Culver City Transit Center. Line 3 runs on headways of approximately 20 to 25 minutes during weekday AM and PM peak hours. Saturday, Sunday, and holiday service is provided roughly every 30 minutes.

Line 4 travels east-west, providing service between West Adams, Downtown Culver City, West Los Angeles College, Fox Hills, and Playa Vista. Near the Project site, Line 4 offers eastbound and westbound stops at the Culver City Transit Center. Line 4 runs with headways of approximately 40 to 45 minutes during weekday AM and PM peak hours. Saturday service operates on headways of approximately 40 to 50 minutes. Line 4 does not operate on Sundays or holidays.

Lines 6 and Rapid 6 provide north-south service between UCLA, Westwood, West Los Angeles, Culver City, and LAX. Line 6 and Rapid 6 both follow the same route; however, Rapid 6 features limited stops at major intersections to provide faster, more express service. From the Project site, Line 6 can be accessed for service in either direction at the Culver City Transit Center. Rapid 6 does not stop at the Culver City Transit Center, but provides stops at the northwest corner of Sepulveda Boulevard and Slauson Avenue, and north of Slauson Avenue at Playa Street. Line 6 runs daily, with headways of approximately 10 to 25 minutes during the weekday AM and PM peak hours. Saturday, Sunday, and holiday service is provided roughly every 20 to 25 minutes. Rapid 6 operates weekdays only, with headways of approximately 15 to 20 minutes during weekday AM and PM peak hours.

METRO

Lines 108 and 358 provide east-west service between Pico Rivera, Maywood, Huntington Park, South Los Angeles, Ladera Heights, Fox Hills, and Marina Del Rey.

Lines 108 and 358 follow the same route, but Line 358 makes limited stops in the middle of the route, providing faster service. Eastbound and westbound service is provided near the Project site with stops on Jefferson Boulevard, just south of Slauson Avenue. Line 108 operates daily with headways of approximately eight to 15 minutes during weekday AM and PM peak hours. Saturday, Sunday, and holiday service operates on headways of approximately 14 to 60 minutes. Line 358 operates weekdays only, with headways of approximately 10 to 20 minutes during weekday AM and PM peak hours.

Line 110 provides east-west service between Bell Gardens, Bell, Huntington Park, Florence-Graham, Inglewood, Fox Hills, and Playa Vista. Eastbound and westbound service is provided near the Project site at stops on Jefferson Boulevard, just south of Slauson Avenue. Line 110 operates daily, with headways of approximately 10 to 20 minutes during weekday AM and PM peak hours. Saturday service is provided approximately every 20 to 30 minutes. Sunday and holiday service operates on headways of approximately 30 to 35 minutes.

Line 217 runs predominantly north-south, between Culver City, Ladera Heights, Pico-Robertson, West Hollywood, and Hollywood. Line 217 stops at the Culver City Transit Center, which is the nearest boarding and alighting location for patrons and employees of the Project. Line 217 operates 24 hours a day, seven days a week, with relatively frequent service; however, evening and early hour service terminates at the La Cienega/Jefferson Expo Rail Station (approximately three miles northeast of the Project site). Line 217 service to the Culver City Transit Center is provided weekdays only, with AM and PM peak-hour headways of roughly 30 to 60 minutes.

As evidenced by the above information, the Project site and surrounding area are fairly well

served by public transit. When transfer opportunities are considered, public transit connects the site with the greater Los Angeles region. Thus, it is expected that some of the person trips generated by the Project would have public transit as the primary travel mode instead of private vehicles.

Analysis of Existing (2018) Traffic Conditions

The seven study intersections listed below were analyzed for existing traffic conditions. They were selected in consultation with staff from the Cities of Culver City and Los Angeles for the analysis of potential Project traffic impacts. The intersection jurisdictions are also noted.

1. Jefferson Boulevard & Mesmer Avenue [Culver City/Los Angeles]
2. Jefferson Boulevard & San Diego Freeway (I-405) Southbound Ramps [Culver City/Los Angeles/Caltrans]
3. Jefferson Boulevard & San Diego Freeway (I-405) Northbound Ramps [Culver City/Los Angeles/Caltrans]
4. Jefferson Boulevard & Slauson Avenue [Culver City]
5. Slauson Avenue & Sepulveda Boulevard [Culver City]
6. Slauson Avenue & Marina Freeway (SR-90) [Culver City/Caltrans]
7. Centinela Avenue & Sepulveda Boulevard [Culver City/Los Angeles]

All of these intersections are signalized. Per the current traffic study guidelines of the involved jurisdictions, the traffic analysis was performed through the use of the Critical Movement Analysis (CMA) methodology. The traffic counts discussed earlier were used, along with other data pertaining to intersection geometrics, on-street parking conditions, and traffic signal operations. The existing traffic lane configurations and traffic controls at each study intersection are shown in Appendix B. These configurations and controls were reviewed and updated, as appropriate, for the analysis.

The analysis and evaluation of traffic operations at each signalized study intersection is based

on procedures outlined in the Transportation Research Board Circular 212, Interim Materials on Highway Capacity.[1] In the discussion of the CMA for signalized intersections, procedures were developed for determining operating characteristics of an intersection in terms of the "Level of Service" (LOS) provided for different levels of traffic volume and other variables, such as the number of traffic signal phases. The CMA methodology is also consistent with the Los Angeles County Congestion Management Program (CMP) procedures for transportation impact analyses.

Level of Service describes the quality of traffic flow. In general, the Level of Service closely correlates with the average amount of delay that motorists will experience at an intersection under prevailing or projected traffic conditions. LOS A through C are indicative of excellent-to-good traffic flow conditions, with no interruptions in flow due to traffic volumes. LOS D corresponds with fair conditions that may experience substantial delay during portions of the peak hours, but without excessive backups. LOS E represents poor conditions, with volumes at or near the capacity of the intersection and long lines of vehicles that may have to wait through several signal cycles. LOS F is characteristic of failure (i.e., the intersection is overloaded, vehicular movements may be restricted or prevented, and delays and queue lengths become increasingly longer).

A determination of the LOS at an intersection can be obtained through a summation of the critical movement volumes, on a per lane basis, at that intersection. Critical movement volumes are the highest total conflicting traffic volumes for each signal phase. Once the sum of the critical movement volumes has been obtained, the values in Table 1 can be used to determine the appropriate LOS.

[1] Interim Materials on Highway Capacity, Circular Number 212, Transportation Research Board, Washington, D.C., 1980.

Table 1
Critical Movement Volume Ranges*
For Determining Levels of Service

Level of Service	Maximum Sum of Critical Volumes (Vehicles Per Hour) Two Phase	Three Phase	Four or More Phases
A	900	855	825
B	1,050	1,000	965
C	1,200	1,140	1,100
D	1,350	1,275	1,225
E	1,500	1,425	1,375
F	---------- Not Applicable ---------		

* For planning applications only (i.e., not appropriate for operations and design applications).

Capacity is the total maximum hourly volume of vehicles in the intersection critical lanes that has a reasonable expectation of passing through the intersection under the prevailing roadway and traffic conditions. For planning purposes, the capacity for signalized intersections equates to the maximum critical movement value at LOS E, as indicated in Table 1.

The CMA volume-to-capacity (V/C) ratios used in this study were calculated by dividing the sum of the critical movement volumes by the appropriate capacity value for the type of signal control present or proposed at the subject intersections. A description of the different LOS and their corresponding V/C values is shown in Table 2.

These standard CMA calculations are also adjusted to account for signal enhancements not considered in the CMA methodology, including the effects of intersections operating under the City of Los Angeles's Automated Traffic Surveillance and Control (ATSAC) system or the upgraded Adaptive Traffic Control System (ATCS), as well as the City of Culver City's ATSAC-like system.

Table 2

Level of Service
As a Function of CMA V/C Ratios

Level of Service	Description of Operating Characteristics	Range of V/C Ratios
A	Excellent. No vehicle waits longer than one red light.	0.000 - 0.600
B	Very Good. An occasional approach phase is fully utilized; many drivers begin to feel somewhat restricted within groups of vehicles.	0.601 - 0.700
C	Good. Occasionally, drivers may have to wait through more than one red light; backups may develop behind turning vehicles.	0.701 - 0.800
D	Fair. Delays may be substantial during portions of the rush hour, but enough lower volume periods occur to permit clearing of developing lines, preventing excessive backups.	0.801 - 0.900
E	Poor. Represents the most vehicles that intersection approaches can accommodate; may be long lines of waiting vehicles through several signal cycles.	0.901 - 1.000
F	Failure. Backups from nearby intersections or on cross streets may restrict or prevent movement of vehicles out of the intersection approaches. Tremendous delays with continuously increasing queue lengths.	> 1.000

ATSAC (ATSAC-like) and ATCS are highly sophisticated computerized systems that continually monitor traffic demands at signalized intersections within the system and modify signal timing in real time to maximize capacity and decrease overall delay. The ATSAC and ATSAC-like systems have been recognized to increase intersection capacity by approximately seven percent. The upgrade to ATCS is able to increase capacity by an additional three percent, resulting in a total 10 percent increase in intersection capacity. Therefore, per City of Culver

City and LADOT policies, the standard V/C ratios were decreased by 0.070 where only the ATSAC or ATSAC-like systems are in effect and by 0.100 where the ATCS is in effect.

Per discussions with LADOT staff, all three study intersections operated by the City of Los Angeles currently function under the upgraded ATCS system (Jefferson Boulevard & Mesmer Avenue, Jefferson Boulevard & I-405 Freeway Southbound Ramps, and Jefferson Boulevard & I-405 Freeway Northbound Ramps). The Culver City-operated study intersections (Jefferson Boulevard & Slauson Avenue, Slauson Avenue & Sepulveda Boulevard, Slauson Avenue & Marina Freeway, and Centinela Avenue & Sepulveda Boulevard) all operate under the City's ATSAC-like system.

Although both Project study area jurisdictions (Cities of Culver City and Los Angeles) utilize the CMA methodology for intersection LOS analyses, the City of Los Angeles maintains its own proprietary analysis spreadsheet, with adjustment factors and assumption override options unique to the City of Los Angeles. Further, Los Angeles development review staff recommended the implementation of additional capacity-constraining techniques when analyzing the intersections of Jefferson Boulevard and the I-405 Freeway southbound and northbound ramps. These techniques included reducing the capacity of the ramp intersections, considering two of the Jefferson Boulevard eastbound through travel lanes at the southbound ramps as pre-left turn lanes for the northbound on-ramp, and considering one of the Jefferson Boulevard westbound through travel lanes at the northbound ramps as a pre-left turn lane for the southbound on-ramp. Therefore, a supplemental analysis, using the proprietary spreadsheet and all staff-recommended adjustments, was also made for the four study intersections located partially within the City of Los Angeles system (Jefferson Boulevard & Mesmer Avenue, Jefferson Boulevard & I-405 Freeway Southbound Ramps, Jefferson Boulevard & I-405 Freeway Northbound Ramps, and Centinela Avenue & Sepulveda Boulevard).

Applying the above-mentioned analysis procedures, the CMA V/C ratios and corresponding LOS can be calculated for each study intersection for Existing (2018) traffic conditions. These results are provided in Table 3. For intersections located in more than one jurisdiction, the worse V/C ratios and LOS results have been shown. As summarized in Table 3, four of the seven study intersections would operate at LOS C or better during both peak hours. Two study intersections (Jefferson Boulevard & I-405 Freeway Southbound Ramps and Centinela Avenue & Sepulveda Boulevard) would operation at LOS D or better during both peak hours. The intersection of Jefferson Boulevard & I-405 Freeway Northbound Ramps was found to operate at LOS F and E during the weekday AM and PM peak hours, respectively. The LOS analysis worksheets for existing traffic conditions are provided in Appendix C.

Table 3
Critical Movement Analysis and Levels of Service Summary:
Existing (2018) Traffic Conditions

No.	Intersection	Peak Hour	V/C Ratio	LOS
1	Jefferson Boulevard &	AM	0.569	A
	Mesmer Avenue [1]	PM	0.501	A
2	Jefferson Boulevard &	AM	0.877	D
	I-405 Freeway Southbound Ramps [1]	PM	0.653	B
3	Jefferson Boulevard &	AM	1.051	F
	I-405 Freeway Northbound Ramps [1]	PM	0.972	E
4	Jefferson Boulevard &	AM	0.368	A
	Slauson Avenue [2]	PM	0.439	A
5	Slauson Avenue &	AM	0.485	A
	Sepulveda Boulevard [2]	PM	0.495	A
6	Slauson Avenue &	AM	0.729	C
	Marina Freeway [2]	PM	0.613	B
7	Centinela Avenue &	AM	0.894	D
	Sepulveda Boulevard [1]	PM	0.879	D

Notes

[1] Analysis results based on City of Los Angeles CMA methodology and assumptions.

[2] Analysis results based on City of Culver City CMA methodology.

PROJECT TRAFFIC

The following section describes the methodology and procedures used to determine the trip generation, distribution, and assignment of traffic resulting from the Project. The Project consists of a boutique hotel with a maximum of 175 rooms, which would also include approximately 3,400 square feet of ancillary restaurant space, a 7,000 square-foot lounge, a 5,100 square-foot rooftop bar, and 4,800 square feet of conference/meeting room space. These auxiliary uses would primarily serve as amenities for patrons of the hotel. The Project site is presently occupied by the Jefferson Plaza strip mall, which contains approximately 13,301 gross square feet of retail space that would be demolished to accommodate the Project. Project vehicular access/egress and parking are described at the end of this section.

Project Trip Generation

The latest version of the Institute of Transportation Engineers (ITE) *Trip Generation Manual* (10th Edition, 2017) was used to develop the traffic characteristics of the Project. The trip generation equations and rates in the ITE manual are nationally recognized and are used as the basis for most traffic impact studies conducted in the Cities of Culver City and Los Angeles, as well as the surrounding region. Information was obtained from the *Trip Generation Manual* for ITE Land Use Code (LUC) 310: Hotel and LUC 820: Shopping Center (used to calculate the existing retail use trip generation). The trip rates for weekday daily, AM peak-hour, and PM peak-hour trip generations, along with directional "split" percentages (inbound vs. outbound), are based on the General Urban/Suburban setting since the trip rates for the Dense Multi-Use Urban setting are based on a limited number of studies. The rates are listed in Table 4.

Table 4
Project Trip Generation Rates

Hotel, ITE LUC 310 (trips per room)	
Daily:	T = 8.36 (RM)
AM Peak Hour:	T = 0.47 (RM); IB = 59%, OB = 41%
PM Peak Hour:	T = 0.60 (RM); IB = 51%, OB = 49%
Shopping Center, ITE LUC 820 (trips per 1,000 square feet of gross floor area)	
Daily:	T = 37.75 (A)
AM Peak Hour:	T = 0.94 (A); IB = 62%, OB = 38%
PM Peak Hour:	T = 3.81 (A); IB = 48%, OB = 52%

Notes
Source: Institute of Transportation Engineers (ITE) *Trip Generation Manual* (10th Edition, 2017).
T = Trip Ends; RM = Rooms; A = Gross Floor Area in Thousands of Square Feet; IB = Inbound; OB = Outbound.

By applying the trip rates provided in Table 4, baseline weekday daily, AM peak-hour, and PM peak-hour trips were calculated for the Project's proposed and existing uses. As these rates do not account for such trip-reducing factors as significant transit usage or pass-by trips, the baseline trip estimates reflect a conservative condition. Such trip-reducing factors are important considerations in determining the actual traffic-generating characteristics of a project and, therefore, adjustments were made to the Project's baseline trip generation estimates.

The use of public transportation is an important consideration in the evaluation of a project's trip-generating potential. As noted previously in the Existing Public Transportation section of this report, the Project is well served by bus lines of multiple transit operators. These transit operators provide both local and regional routes that are readily accessible to Project patrons and employees. Significant transit use is not accounted for in the ITE *Trip Generation Manual* General Urban/Suburban trip rates and equations. Because the trip rates for the General Urban/Suburban setting do not consider significant transit connectivity, adjustments can be made to the Project trip generation to account for transit usage associated with the proposed

and existing land uses. Additionally, "walk-in" trips to and from the Project site are also expected. Given the mix of nearby land uses within/adjacent to the Sunkist Park neighborhood, it is expected that people staying and working at the Project would consider walking between the Project and nearby developments. Situated at the southerly end of a community-serving commercial corridor with a diverse mix of commercial, industrial, residential, office, and retail land uses nearby, the Project site is expected to be attractive and conducive to pedestrian traffic. This walk-in patronage would reduce the number of vehicle trips generated by the Project. However, even with the abundance of available transit options and walking opportunities within the general Project vicinity, no transit or walk-in adjustment factor was assumed for the Project's proposed and existing land uses in order to provide a more conservative analysis.

Trip reduction factors for the Project also account for the presence of "pass-by" trips. As some motorists pass by the Project's existing uses, the specific convenient facilities provided by these uses (or other factors) produce a stop at the site. Such activity is considered to be an interim stop along a trip which existed irrespective of the presence of these existing uses, and therefore vehicles making these stops are not considered to be newly generated existing use-related traffic. The ITE *Trip Generation Manual* contains a series of average observed pass-by trip reduction percentages for various land use types, and the City of Culver City traffic study guidelines includes advice and City-recommended maximums for these percentages. Based on this guidance, a pass-by trip adjustment of 25 percent was applied to the Project's existing use baseline trips. This pass-by trip adjustment factor has been approved by Culver City staff in a Memorandum of Understanding (MOU) signed on March 26, 2019 and included as Appendix D.

Based on the trip generation rates and aforementioned trip reduction factors, projections of the amount of traffic to be generated for the Project were derived. Table 5 summarizes the trip

generation for the Project. As shown in Table 5, once completed and occupied, the Project is anticipated to generate a total of 1,087 net trips per day, with 72 net trips during the AM peak hour and 67 net trips during the PM peak hour. These peak-hour trips were distributed to analyze Project impacts at all seven study intersections.

Table 5
Project Trip Generation Summary

Land Use	ITE Code	Intensity[2]	Average Weekday	AM Peak Hour			PM Peak Hour		
				In	Out	Total	In	Out	Total
Trip Generation Rates									
Hotel	310	1 rm	8.36	59%	41%	0.47	51%	49%	0.60
Shopping Center	820	1 ksf	37.75	62%	38%	0.94	48%	52%	3.81
Trip Generation Summary									
Description		**Size**	**Average Weekday**	**AM Peak Hour**			**PM Peak Hour**		
				In	**Out**	**Total**	**In**	**Out**	**Total**
PROPOSED USES									
Hotel		175 rm	1,463	48	34	82	54	51	105
Proposed Project Trips			**1,463**	**48**	**34**	**82**	**54**	**51**	**105**
EXISTING USE									
Shopping Center		13.301 ksf	502	8	5	13	24	27	51
25% Pass-By Adjustment			(126)	(2)	(1)	(3)	(6)	(7)	(13)
Existing Project Driveway Trips (including Pass-By Trips)			**502**	**8**	**5**	**13**	**24**	**27**	**51**
Existing Project Trips			**376**	**6**	**4**	**10**	**18**	**20**	**38**
Net Project Driveway Trips (including Pass-By Trips)			**961**	**40**	**29**	**69**	**30**	**24**	**54**
Net Project Trips			**1,087**	**42**	**30**	**72**	**36**	**31**	**67**

Notes:

1) ITE *Trip Generation Manual* (10th Edition, 2017) trip generation rates and directional distributions for Land Use Codes 310 (Hotel) and 820 (Shopping Center) applied for the weekday daily, AM peak-hour, and PM peak-hour time periods. Rates for the general urban/suburban setting were used, as the rates for the Dense Multi-Use Urban setting are based on a limited number of studies.
2) rm = Rooms; ksf = Thousands of Square Feet of Gross Leasable Area.

In order to reflect appropriately Project trips in the direct site vicinity, trip reductions for existing commercial use pass-by activity were not be applied to the Project's driveways and appropriate site-adjacent intersections, since pass-by trips, while not new to the area roadways, would be included in the number of vehicles that enter and exit the site's driveways and appropriate site-adjacent intersection turning movements required for Project access/egress. The total Project traffic volumes at the Project driveways and appropriate site-adjacent intersections were also calculated. These calculations indicate that approximately 961

net trips per day, with 69 net trips during the AM peak hour and 54 net trips during the PM peak hour, would access the Project driveways. These net traffic volumes were used to estimate Project traffic impacts at the site-adjacent study intersection of Jefferson Boulevard & Slauson Avenue.

Project Trip Distribution and Assignment

Estimation of the geographic distribution of Project trips was the next step in the analytical process. The primary factors affecting the trip distribution patterns are the nature of the Project uses, existing traffic patterns, characteristics of the surrounding roadway system, geographic location of the Project site and its proximity to freeways and major travel routes, economic and entertainment centers to which hotel patrons would likely be attracted, residential areas from which hotel employees would likely be drawn, and the various nearby land uses that would interact with the existing on-site commercial uses. Based on the abovementioned factors, the overall trip distribution percentages for the Project's proposed and existing uses were determined and are summarized in Table 6. The City of Culver City has approved these trip distribution assumptions in an MOU signed on March 26, 2019 and included as Appendix D.

Table 6
Project Directional Trip Distribution Percentages

Direction	Proposed Use Percentage	Existing Use Percentage
North	20%	22%
South	40%	34%
East	12%	17%
West	28%	27%
Total	100%	100%

The general distribution percentages for the Project land uses shown in Table 6 were then disaggregated and assigned to specific routes and intersections that are expected to be used for Project access/egress. The estimated Project trip assignment percentages for the proposed and existing uses at the study intersections were reviewed and approved by the Culver City staff in an MOU signed on March 26, 2019 and included as Appendix D. It should be noted that the nearby intersection of Jefferson Boulevard/Playa Street & Sepulveda Boulevard was not reviewed as part of the traffic impact study given that the net Project trip contributions to this intersection would be minimal (6 AM peak-hour trips, 3 PM peak-hour trips) and therefore would be insufficient to create a significant traffic impact. The Project's proposed and existing land use trip distribution percentages are presented in Figures 5(a) and 5(b), respectively.

Applying these inbound and outbound percentages to the proposed and existing Project use trip generation estimates, the traffic volumes for the proposed and existing Project uses were determined for the seven study intersections and three study residential street segments. By subtracting the total existing Project-only traffic volumes from the total proposed Project-only traffic volumes at the study intersections, the net Project traffic volumes were determined for the weekday AM and PM peak hours. These net Project-only AM and PM peak-hour traffic volumes are depicted in Figures 6(a) and 6(b), respectively.

Project Parking and Access

A parking demand analysis was conducted for the Project in order to determine the anticipated overall peak parking demand and verify if the proposed parking supply would be sufficient to meet the peak demand. The parking demand analysis was prepared in accordance with the Alternative Parking Provisions of the Culver City Municipal Code ("CCMC"), which include a shared parking option for developments with multiple non-residential land uses. The parking

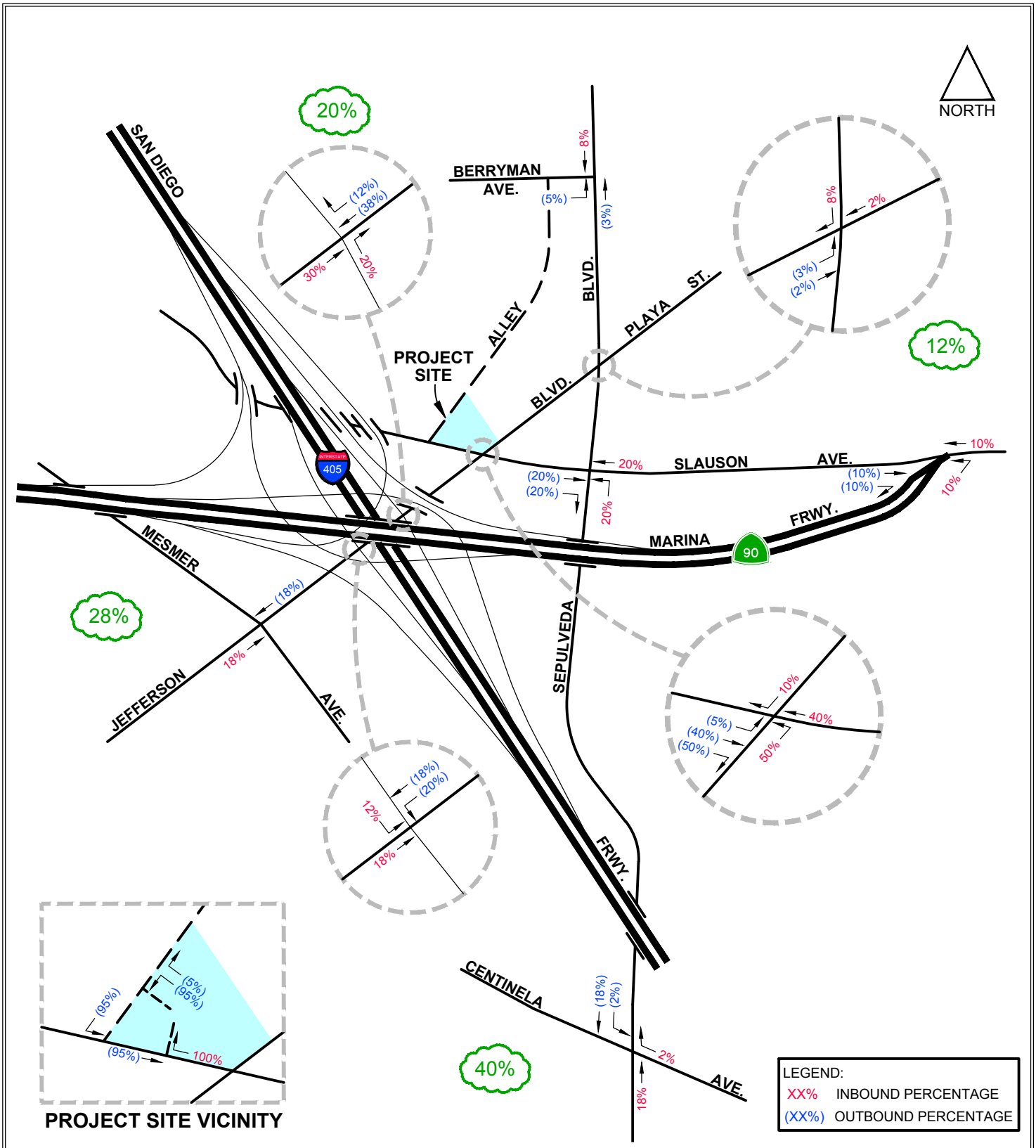

FIGURE 5(a)

4/3/2020

FN: JEFFERSON HOTEL CULVER\PROJ-DISTRIBUTION

PROPOSED PROJECT TRIP DISTRIBUTION PERCENTAGES

CRAIN & ASSOCIATES
Transportation Planning
Traffic Engineering
300 Corporate Pointe, Suite 470
Culver City, California 90230
PH (310) 473 6508 F (310) 444 9771
www.crainandassociates.com

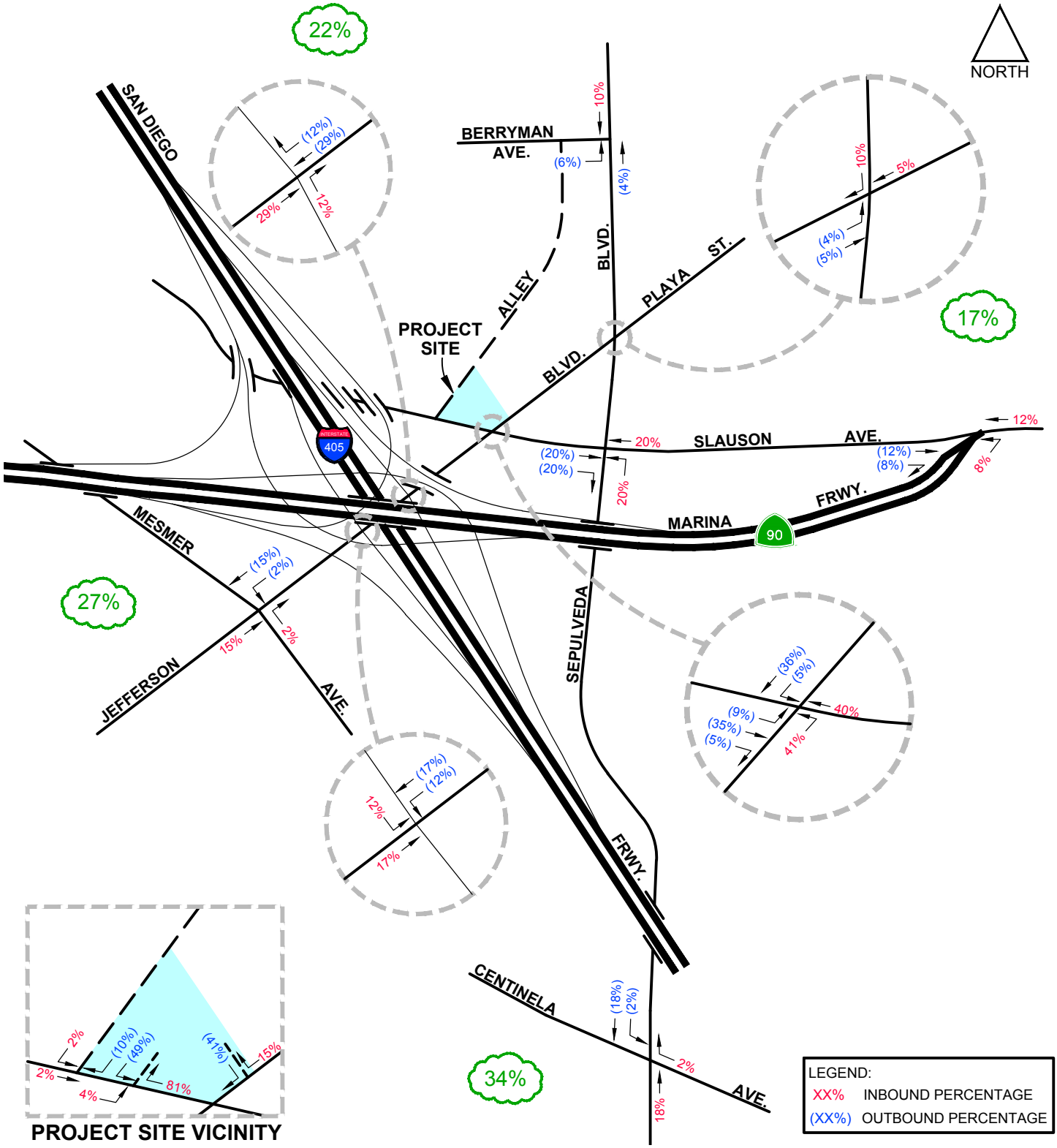

ATTACHMENT 5(b)

9/3/2019

FN: JEFFERSON & SLAUSON HOTEL\201606\PROJ-DISTRIBUTION

EXISTING PROJECT TRIP DISTRIBUTION PERCENTAGES

CRAIN & ASSOCIATES
Transportation Planning
Traffic Engineering
300 Corporate Pointe, Suite 470
Culver City, California 90230
PH (310) 473 6508 F (310) 444 9771
www.crainandassociates.com

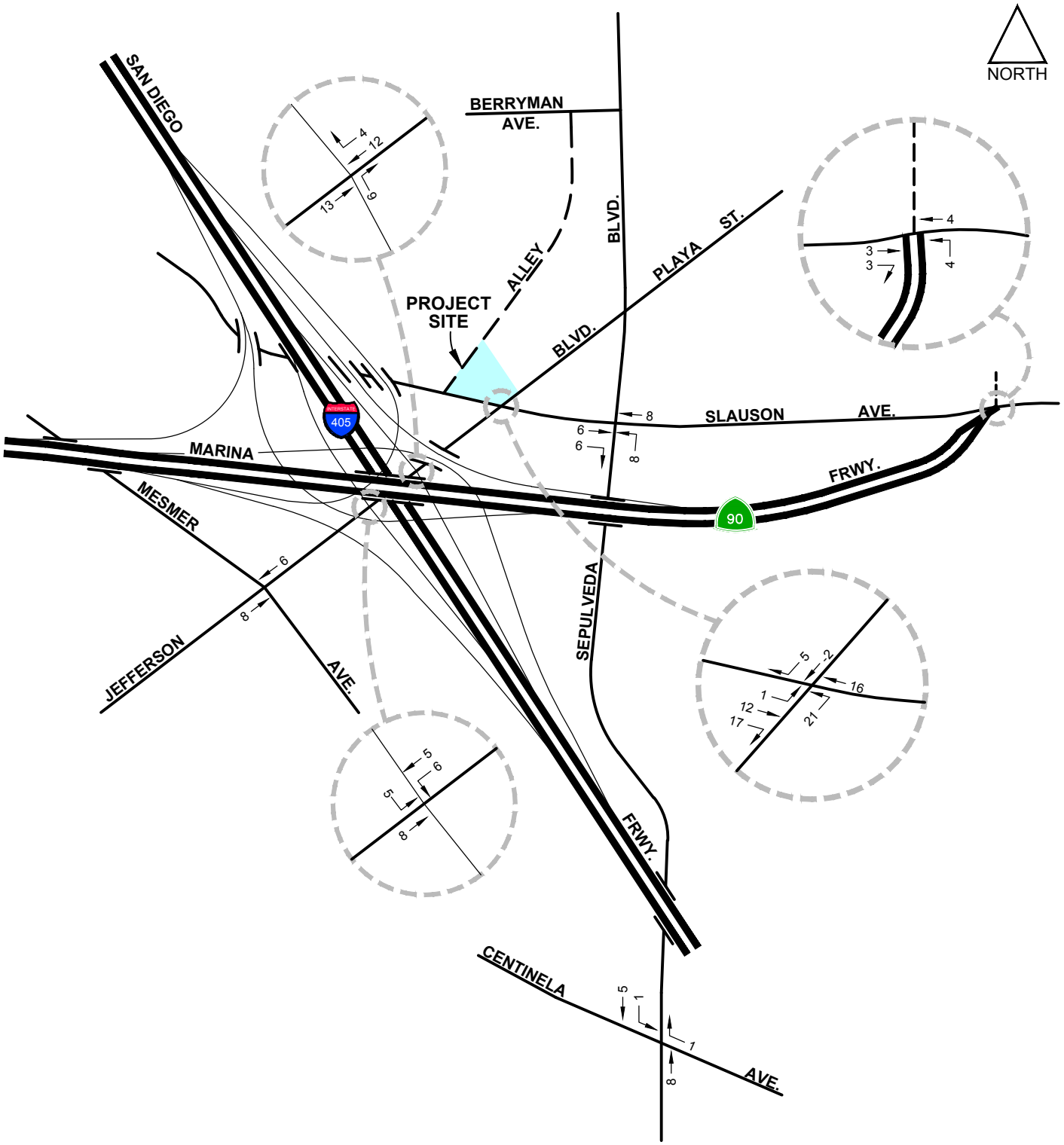

FIGURE 6(a)

4/3/2020

JeffersonHotelCulver\REPORT GRAPHICS20190618\AMPRJVOLS

NET PROJECT PEAK-HOUR TRAFFIC VOLUMES
AM PEAK HOUR

CRAIN & ASSOCIATES
Transportation Planning
Traffic Engineering
300 Corporate Pointe, Suite 470
Culver City, California 90230
PH (310) 473 6508 F (310) 444 9771
www.crainandassociates.com

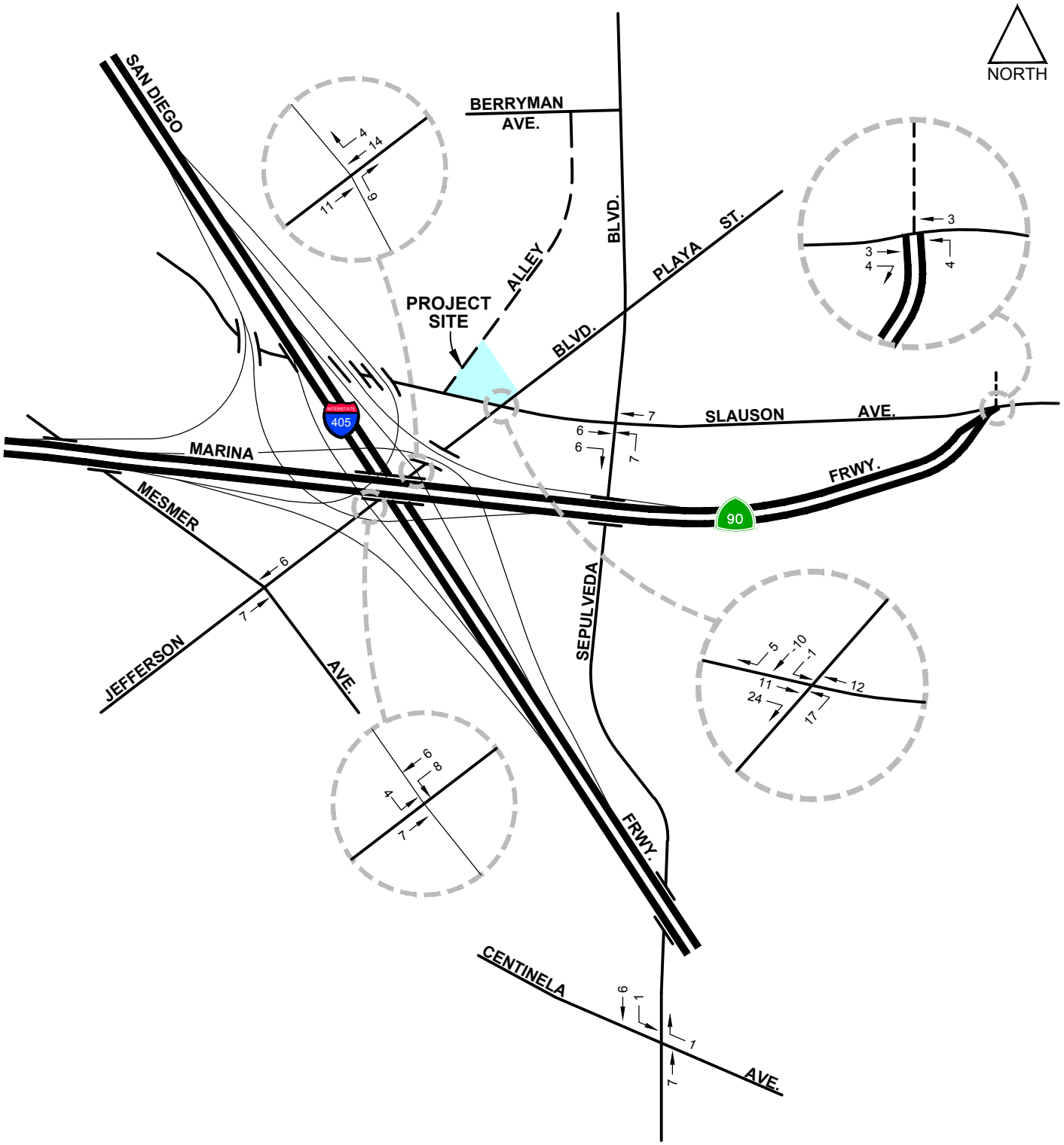

FIGURE 6(b)

4/3/2020

JeffersonHotelCulver\REPORT GRAPHICS20190618\PMPRJVOLS

NET PROJECT PEAK-HOUR TRAFFIC VOLUMES
PM PEAK HOUR

CRAIN & ASSOCIATES
Transportation Planning
Traffic Engineering
300 Corporate Pointe, Suite 470
Culver City, California 90230
PH (310) 473 6508 F (310) 444 9771
www.crainandassociates.com

demand analysis was coordinated with the City. The analysis evaluated the Project's peak parking demands based on three approaches: a shared parking analysis of the Project land use components for which adequate parking must be provided based on CCMC parking ratios, a shared parking analysis of the Project land use components based on Urban Land Institute (ULI) recommended base parking ratios, and an empirically based parking demand analysis utilizing recently collected parking utilization data from three similar, nearby Culver City hotels.

The parking utilization surveys were conducted at the DoubleTree by Hilton Hotel at 6161 Centinela Avenue, the Courtyard by Marriott at 6333 Bristol Parkway, and the Four Points by Sheraton at 5990 Green Valley Circle. Occupied parking space data were collected at these three hotel locations, and the overall parking supply was verified for each site. Based on the peak parking demand rates developed conservatively using these parking utilization data, the Project's expected peak weekday and weekend parking demands were calculated. The Project is expected to have a maximum parking demand of 138 parking spaces, which would occur midday on a weekday. The Project's parking supply of 138 parking spaces would, therefore, accommodate the maximum parking demands of the Project, and no off-site Project parking impacts are expected. The Project parking demand analysis has been included as Appendix E.

Parking for the Project would be provided underneath the building, in two subterranean parking levels that are designed to accommodate 138 vehicles through a combination of standard, ADA accessible, and tandem spaces. The Project site would include valet-assist parking in order to maintain safe and efficient use of the tandem spaces.

The Project site would be accessed by dual entry lanes from westbound Slauson Avenue, separated physically by a concrete column near the back-of-sidewalk. The drive aisle closer to the hotel (the inner aisle) would serve as a passenger drop-off and pick-up area. The second

drive aisle would allow entering vehicles to access the parking ramp down to the two subterranean parking levels. Access to the subterranean parking garage would not be gate controlled. A striped median would extend from the concrete column to delineate the two entry lanes of traffic; however, vehicles in the inner aisle would be able to maneuver around stopped vehicles dropping off/picking up when necessary. All motorists using the inner aisle would have to merge with outer drive aisle traffic in order to exit the site.

There would be two Project driveway exits onto the adjacent unnamed alley to egress onto the surrounding roadway system. One exit driveway would be provided directly off of the dual drive aisles (which would merge into a single drive aisle approaching the alley), while the second exit would provide egress for vehicles exiting the subterranean parking garage. Exiting vehicles would be allowed to travel north or south along the unnamed alley toward Berryman Avenue or Slauson Avenue, respectively. It is anticipated that the Project would increase vehicular traffic on the unnamed alley since all outbound Project trips would exit the site onto the alley.

The Project would remove existing on-street parking on Slauson Avenue, adjacent to the Project site and between the unnamed alley and Jefferson Boulevard. There are a total of approximately six existing parking spaces (three on either side of the existing site driveway). Although these existing parking spaces are currently unmetered, the City of Culver City has plans to install meters in the near future. Therefore, in order to accommodate the Project's site plan design, up to six parking spaces may be removed at a loss of $1,000 per meter per year (based on the City-wide parking meter revenue average). The Project shall pay the City a total of $30,000 for five years of lost parking revenue for six lost parking spaces along Slauson Avenue caused by the Project.

A conceptual striping plan of Slauson Avenue and Jefferson Boulevard, adjacent to the Project site and illustrating the Project site in relation to these roadways, is provided in Appendix F. As recommended by City staff, the plan indicates the maintenance of an 18-foot sidewalk on Slauson Avenue, adjacent to the Project site, striping a crosswalk across the alley, and providing signage that will be installed at the inbound driveway to advise arriving hotel guests of the parking options and locations (e.g., drop-off/pick-up on ground floor via the inner drive aisle, self-park on two subterranean parking levels with valet assist via the outer drive aisle).

Per City request, a truck turn analysis was conducted based on the largest size truck expected to serve the Project site -- a WB-50 truck type with an overall length of 55 feet, width of 8.5 feet, and height of 13.5 feet (see Appendix G). This truck size largely conforms to the City Code restrictions, with the exception of the width. Trucks with widths greater than 8 feet require a permit. Accordingly, the Project would obtain a permit if it became necessary to operate a vehicle wider than 8 feet to serve the site. It should be noted that the larger, 55-foot long delivery trucks would serve the site infrequently (no more than two times per month) and prior to the start of the weekday AM peak period. A flagger would be available to assist all truck deliveries with access to/from the loading area, thereby ensuring that all delivery trucks maneuver safely and efficiently into and out of the loading area. Protective devices such as bollards shall be installed on the west side of the alley in front of the loading area, if they can be accommodated.

As shown in Appendix G, for the inbound trip, the WB-50 truck would be capable of backing into the loading area by traveling north on the public alley from Slauson Avenue. For the outbound trip, the truck would exit the site by turning right and traveling northbound on the public alley towards Berryman Avenue.

Finally, the Project waste management plan describing how waste and recyclable materials would be handled for the site has been included in Appendix H.

Project Bicycle Access

Figure 7 is an exhibit showing the recommended bicycle facilities per the City of Culver City Bicycle & Pedestrian Action Plan, as adopted by the City Council in June 2020. Currently, there are no existing bicycle facilities within the City of Culver City near the Project site, except for short bicycle lane segments along the west and east sides of Sepulveda Boulevard, south of Centinela Avenue. These short sections are located in the City of Los Angeles and join the existing bicycle lanes to the south along Sepulveda Boulevard.

In the future, the City's Bicycle & Pedestrian Action Plan [shown in Figure 7] proposes to install Class II bicycle lanes on the following segments in the general Project study area:

- Berryman Avenue, between Hayter Avenue and Sepulveda Boulevard;
- Centinela Avenue, between Mesmer Avenue and Sepulveda Boulevard; and
- Hannum Avenue, between Playa Street and Slauson Avenue.

Class IV separated bikeways are proposed on the following roadway segments:

- Centinela Avenue, between Sepulveda Boulevard and Green Valley Circle;
- Jefferson Boulevard, between the City limit and Sepulveda Boulevard; and
- Sepulveda Boulevard, between the Ballona Creek Bike Path and Centinela Avenue.

A Class III bicycle roadway is proposed on the following roadway segment:

- Hannum Avenue, between Sawtelle Boulevard and Playa Street.

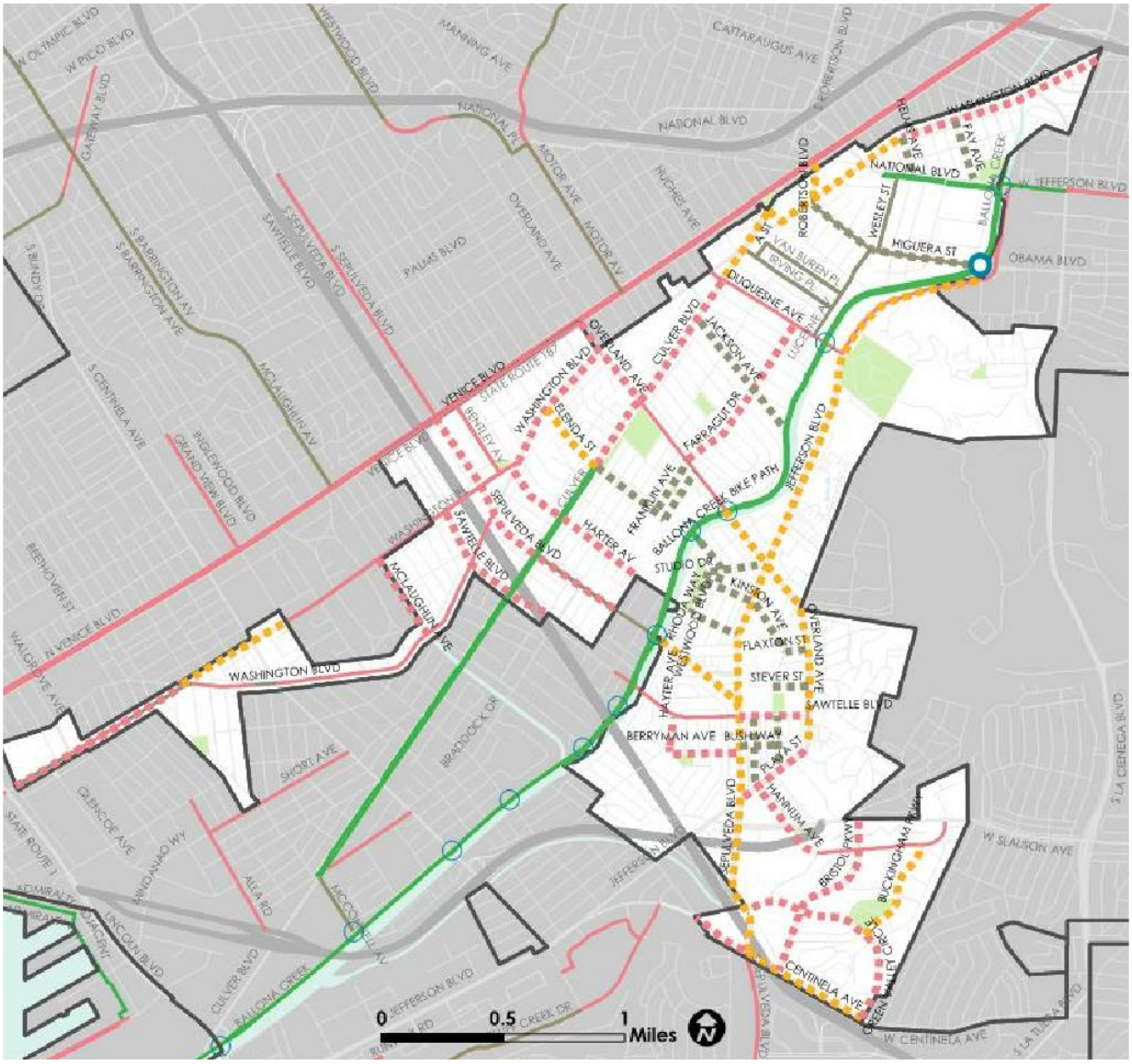

Recommended Bikeways

- Class I Shared-Use Path
- Class II Bicycle Lane
- Class III Bike Route/Boulevard
- Class IV Separated Bikeway
- New Entrance to Bike Path

Existing Bikeways

- Class I Shared-Use Path
- Class II Bicycle Lane
- Class III Bike Route/Boulevard
- Entrance to Bike Path

SOURCE: CULVER CITY BICYCLE & PEDESTRIAN ACTION PLAN (JUNE 2020)

FIGURE 7

10/19/2020

FN: JEFFERSON & SLAUSON HOTEL\REPORT GRAPHICS20201019\CCBIKEMP

CITY OF CULVER CITY
BICYCLE & PEDESTRIAN ACTION PLAN
RECOMMENDED BICYCLE FACILITIES

CRAIN & ASSOCIATES
Transportation Planning
Traffic Engineering
300 Corporate Pointe, Suite 470
Culver City, California 90230
PH (310) 473 6508 F (310) 444 9771
www.crainandassociates.com

The City of Los Angeles Mobility Plan 2035 identifies facilities as part of its Bicycle Enhanced Network (BEN), including bicycle paths and protected bicycle lanes, to be completed by 2035. As part of these BEN facilities and as shown in Figure 8, Sepulveda Boulevard is a Tier 1 Protected Bicycle Lane facility, south of Centinela Avenue to Manchester Avenue. Centinela Avenue is identified for a Tier 1 Protected Bicycle Lane improvement, from Mesmer Avenue to its intersection with Jefferson Boulevard which transitions to Inglewood Boulevard until it terminates at the Ballona Creek Bike Path.

The Project access driveway on Slauson Avenue would be required to conform to Culver City standards, and would be designed to provide adequate sight distance. Street trees and other potential impediments to adequate visibility would be minimal. The Project entrance-only and exit-only driveway connections to Slauson Avenue and the site-adjacent unnamed alley, respectively, would provide the most direct connection to and from the bicycle parking located on the Project's ground floor. The one-way operation of the Project's internal drive would have less potential for vehicle-bicycle conflicts than a two-way internal drive, providing enhanced safety for bicyclists accessing/egressing the Project.

It should be noted that the Project will implement a TDM plan with measures designed to promote alternative modes of travel to/from the Project, including by bicycle. The bicycle-related TDM measures include: providing employees with bicycle route and facility information, including bicycle maps and bicycle safety information, via bulletin board/website; bike-bicycle parking (short-term and long-term) in excess of City requirements; a self-serve bicycle tool and repair stand; free on-site shared bicycles; bike-to-work promotions; and a shower/changing room for employees who bike to work.

Based on these considerations, the Project would not affect the ability of the City of Culver City or the City of Los Angeles to implement their bicycle plans or result in bicycle access impacts.

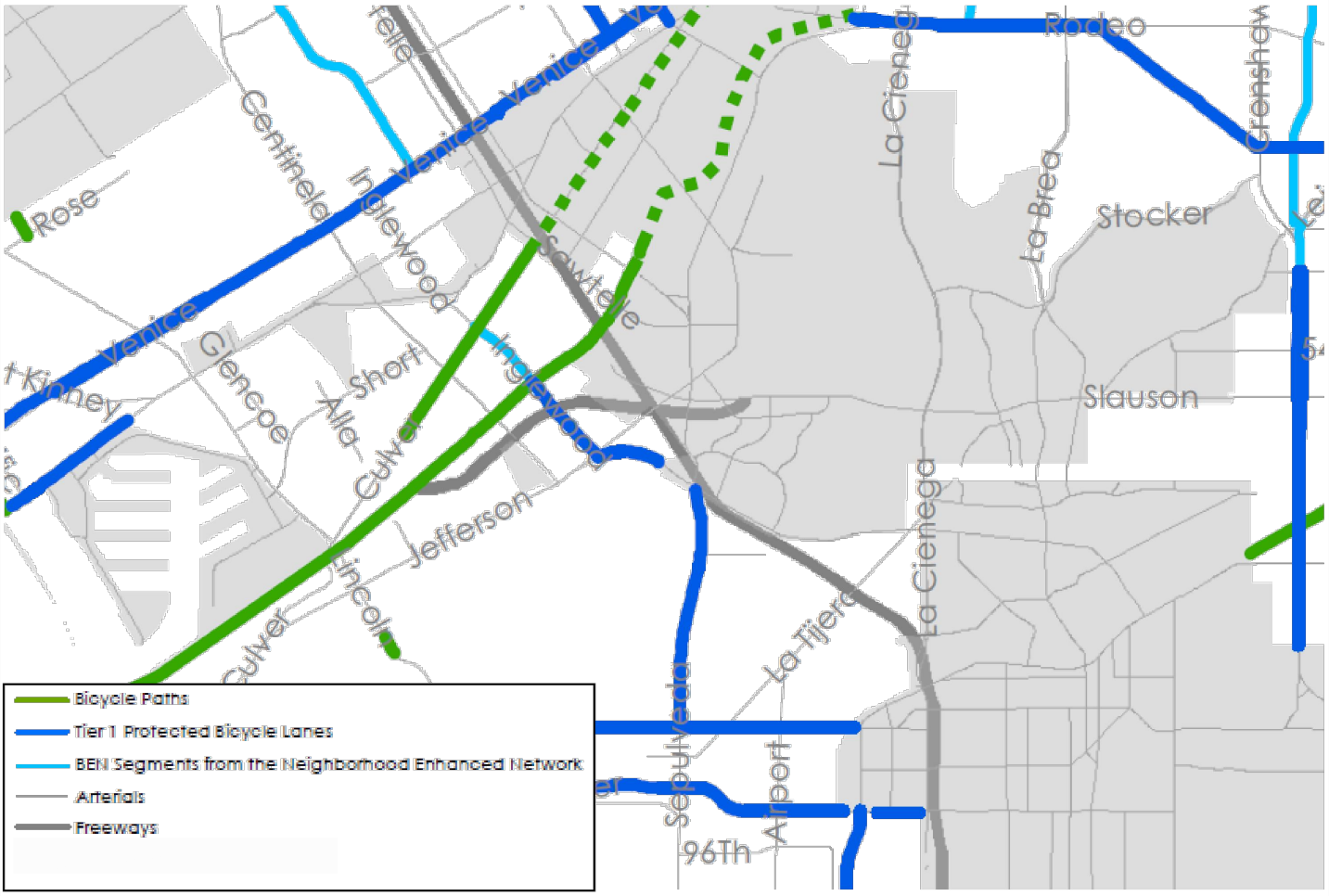

(SOURCE: LA MOBILITY PLAN 2035)

FIGURE 8

4/3/2020

FN: JEFFERSON & SLAUSON HOTEL\LABIKEMP

CITY OF LOS ANGELES MOBILITY PLAN 2035
BICYCLE ENHANCED NETWORK

CRAIN & ASSOCIATES
Transportation Planning
Traffic Engineering
300 Corporate Pointe, Suite 470
Culver City, California 90230
PH (310) 473 6508 F (310) 444 9771
www.crainandassociates.com

EXISTING WITH PROJECT TRAFFIC CONDITIONS

The "Existing With Project" traffic conditions are defined by the traffic volumes, roadways, and intersection configurations/controls that exist in the year 2018, and the addition of traffic that would be generated by the Project. The net Project traffic volumes, determined in the previous section and presented in Figures 6(a) and 6(b), were added to the Existing traffic volumes shown in Figures 3(a) and 3(b). This produced the Existing With Project peak-hour traffic volumes shown in Figures 9(a) and 9(b). Ambient traffic growth and related projects traffic, and any future roadways or infrastructure improvements, were not included in this analysis, as this analysis is of the Existing condition for the year 2018.

The Existing With Project volumes in Figures 9(a) and 9(b) were analyzed using the previously discussed CMA procedures. These volumes were used to determine the impacts attributable to the Project relative to Existing volumes, the results of which are presented in Table 8, page 60. As shown in Table 8, following the addition of Project traffic to existing conditions and based on the CMA methodology, four of the seven study intersections would continue to operate at LOS C or better during both peak hours. Two study intersections (Jefferson Boulevard & I-405 Southbound Ramps and Centinela Avenue & Sepulveda Boulevard) would continue to operate at LOS D or better during both peak hours. Lastly, the intersection of Jefferson Boulevard & I-405 Northbound Ramps would continue to operate at LOS F and LOS E during the AM and PM peak hours, respectively. However, the Project caused a significant impact at this intersection in the City of Los Angeles.

The LOS analysis worksheets for Existing With Project traffic conditions are provided in Appendix C.

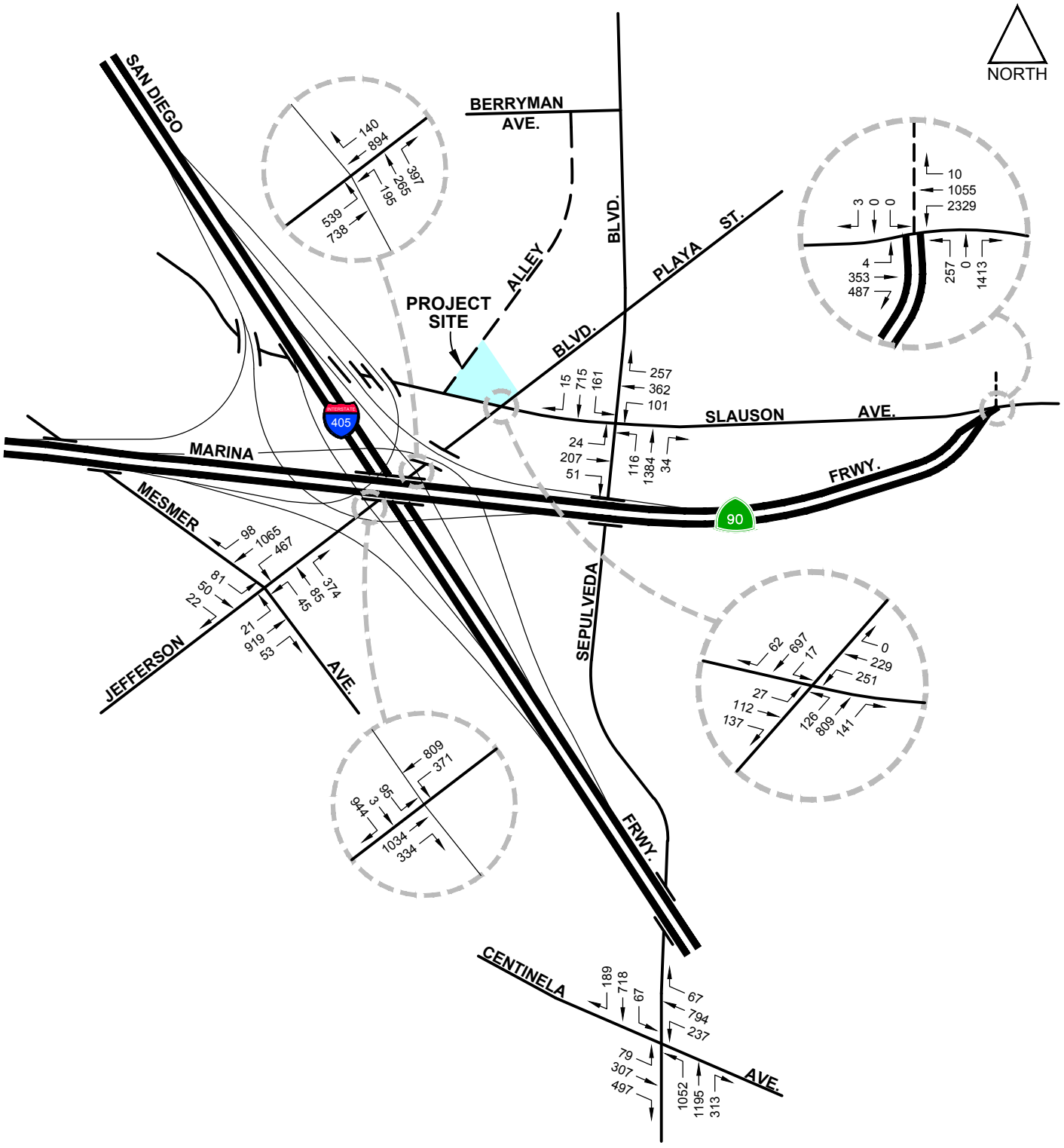

FIGURE 9(a)

9/3/2019

JeffersonHotelCulver\REPORT GRAPHICS20190618\AM2018WP

EXISTING (2018) TRAFFIC VOLUMES
WITH PROJECT
AM PEAK HOUR

CRAIN & ASSOCIATES
Transportation Planning
Traffic Engineering
300 Corporate Pointe, Suite 470
Culver City, California 90230
PH (310) 473 6508 F (310) 444 9771
www.crainandassociates.com

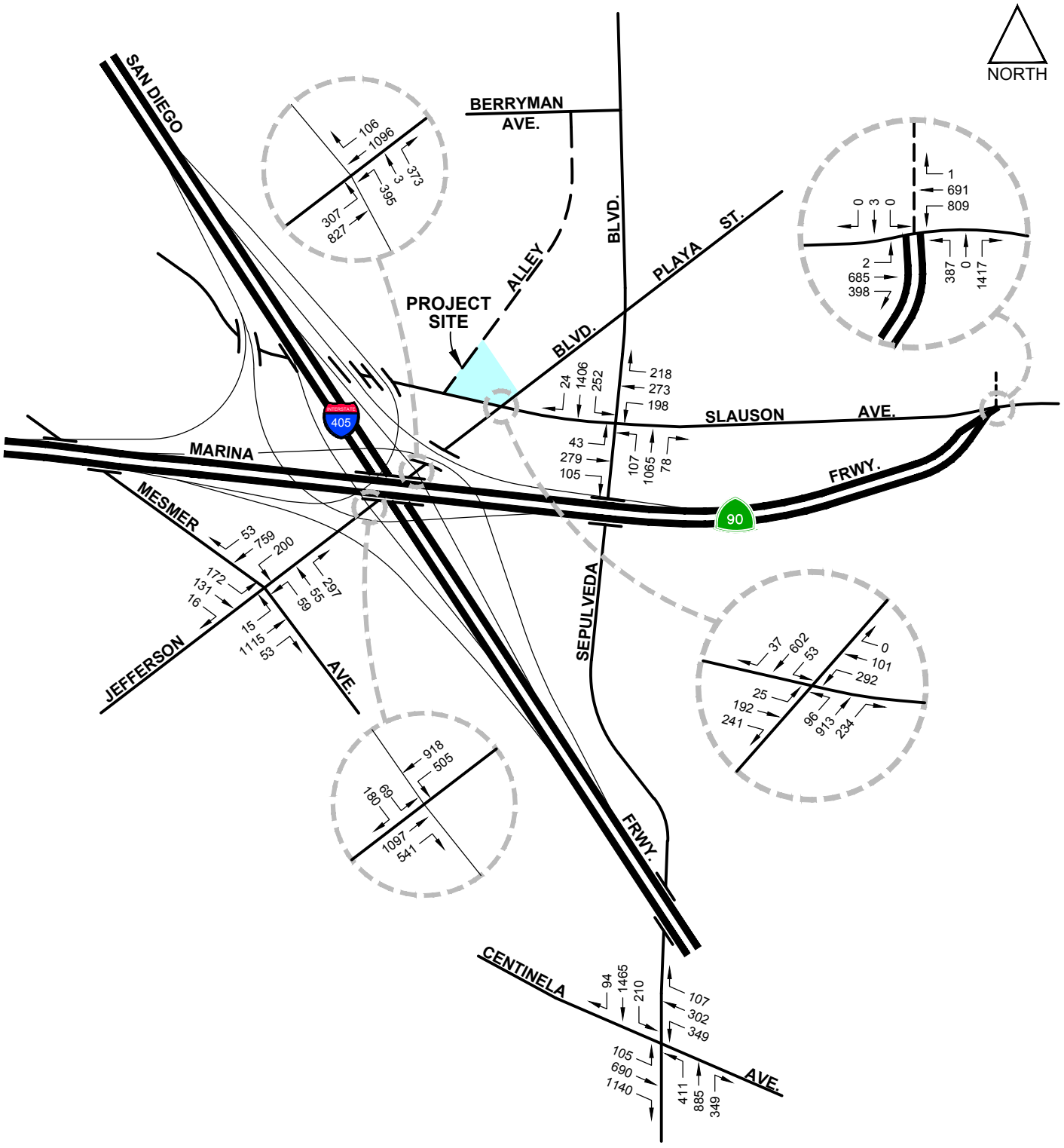

FIGURE 9(b)

9/3/2019

JeffersonHotelCulver\REPORT GRAPHICS20190618\PM2018WP

EXISTING (2018) TRAFFIC VOLUMES
WITH PROJECT
PM PEAK HOUR

CRAIN & ASSOCIATES
Transportation Planning
Traffic Engineering
300 Corporate Pointe, Suite 470
Culver City, California 90230
PH (310) 473 6508 F (310) 444 9771
www.crainandassociates.com

FUTURE TRAFFIC CONDITIONS

Other projects just completed, under construction, or planned for development in the Project study area – referred to as related projects – could add substantial traffic volumes to the study intersections. For this reason, the analysis of future traffic conditions was expanded to include potential traffic generated by these related projects.

The methodology for estimating future traffic volumes can be summarized as follows: First, existing traffic volumes at the study intersections were determined through traffic counts, as described previously. Next, an average annual traffic growth factor of 1.0 percent was applied to the existing volumes to develop "baseline" volumes for the future study year. In this case, the year 2024 was selected as the future study year, which is when the Project is expected to be completed and occupied. Traffic volumes that may be generated by related projects were then overlayed on the future baseline volumes. Finally, net Project traffic was analyzed as an incremental addition to the projected future volumes.

Ambient Traffic Growth

An annual traffic growth factor of 1.0 percent was applied to account for ambient traffic growth. This growth is attributable to smaller sized potential development projects, traffic generators outside the Project study area, and general growth in through traffic volumes. The 1.0 percent factor was compounded annually and applied to the existing (2018) traffic volumes to develop year future (2024) baseline volumes.

Related Projects

In addition to ambient traffic growth, related projects in the study area could also contribute to traffic volume increases on the local roadway system. Listings of potential related projects

were obtained from the Cities of Culver City and Los Angeles. Research was also conducted regarding recent traffic studies in the study area for additional related project information.

A review of the collective information found that traffic from 32 potential related projects could add traffic to the study intersections. The locations of these related projects are shown in Figure 10. Included in the list of related projects are the Howard Hughes Center development, Entrada creative office project, and the Jefferson & La Cienega Project. Per discussion with LADOT staff, it was determined that the since the overall Playa Vista development (Playa Vista Phase I and The Village at Playa Vista [Phase II]) has been completed and occupied to a large degree, the development should not be included as a related project.

The current related projects addresses and descriptions, along with their estimated trip generations, are presented in Table 7. These trips were distributed and assigned using similar assumptions and rationale as applied to Project traffic. In the case where environmental documentations were available, the potential related projects trips were directly taken from those sources, as noted. In the absence of other available data, related project trip estimates were determined by applying the appropriate trip rates and/or directional splits from the ITE *Trip Generation Manual* (10th Edition, 2017). The relevant ITE rates and formulas are provided in Appendix I. Summing the individual related project traffic volume assignments, the total related project traffic volumes at the study intersections were calculated and are shown in Figures 11(a) and 11(b) for the weekday AM and PM peak hours, respectively.

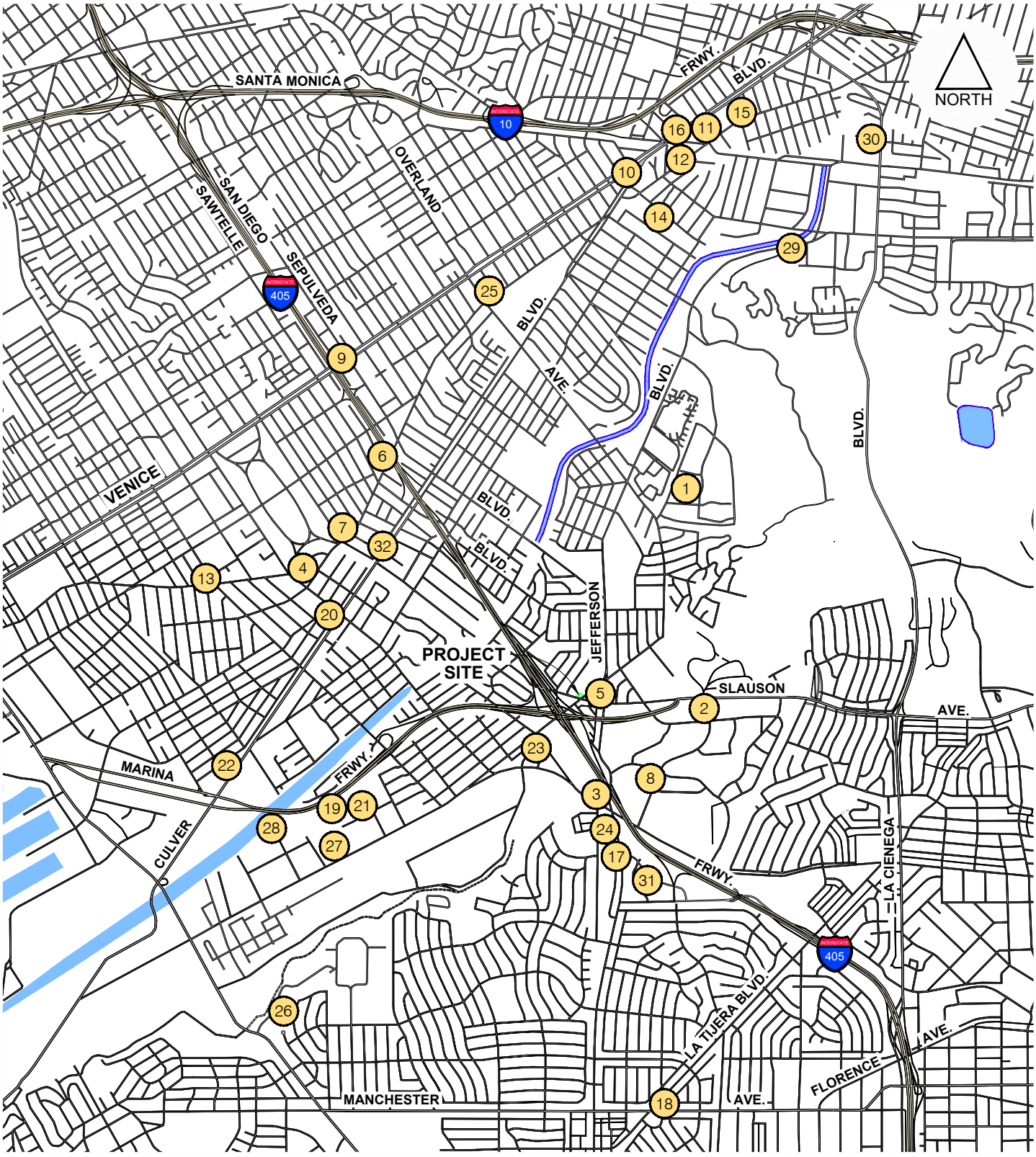

FIGURE 10

9/3/2019

FN: JEFFERSON HOTEL CULVER\RELPROJS

RELATED PROJECTS LOCATION MAP

CRAIN & ASSOCIATES
Transportation Planning
Traffic Engineering
300 Corporate Pointe, Suite 470
Culver City, California 90230
PH (310) 473 6508 F (310) 444 9771
www.crainandassociates.com

Table 7
Related Project Locations, Descriptions, and Trip Generations

	PROJECT NAME	ADDRESS	SIZE		PROJECT DESCRIPTION	DAILY	AM PK HR IN	AM PK HR OUT	AM PK HR TOTAL	PM PK HR IN	PM PK HR OUT	PM PK HR TOTAL
CITY OF CULVER CITY												
1.	West Los Angeles College Master Plan	9000 Overland Avenue	11,675	stu	Enrollment Increase	2,186	119	34	153	70	59	129
2.	Office & Retail Building	700-701 Corporate Pointe	281,400	sf	General Office	1,440	188	31	219	32	165	197
3.	Entrada Creative Office	6161 W. Centinela Avenue	281,209	sf	General Office	2,880	385	53	438	67	326	393
4.	Culver West Mixed Use Washington/Inglewood	11924 Washington Boulevard	3,750	sf	Restaurant	1,087	(8)	40	32	65	26	91
			11,250	sf	Retail							
			98	du	Apartment							
			(26,445)	*sf*	*General Office (to be removed)*							
5.	4-Story Commercial	5645 Sepulveda Boulevard	3,193	sf	Retail	1,410	59	21	80	43	96	139
			38,712	sf	Medical Office							
			(5,000)	*sf*	*General Office (to be removed)*							
6.	Office Building	11259 Washington Boulevard	4,022	sf	General Office	47	26	4	30	1	4	5
7.	Vista Del Sol - Assisted Living Expansion	11620 Washington Boulevard	72	bd	Assisted Living	187	9	5	14	7	12	19
8.	Bristol Parkway Mixed Use	6201 Bristol Parkway	20,767	sf	Retail	3,731	52	240	292	180	69	249
			662	du	Apartment							
			50	du	Live/Work							
			(60,000)	*sf*	*Retail (to be removed)*							
9.	Shell Gas Station	11224 Venice Boulevard	3,150	sf	Gas Station With Convenience Market	4,536	122	117	239	142	136	278
10.	Parcel B - Culver Steps	9300 Culver Boulevard	45,000	sf	Retail/Restaurant	2,398	102	28	130	94	153	247
			65,000	sf	General Office							
			10,000	sf	Public Plaza							
11.	Ivy Station Washington/National TOD	8824 National Boulevard	10,000	sf	High-Turnover Restaurant	4,124	173	83	256	127	174	301
			10,000	sf	Quality Restaurant							
			200	du	Mid-Rise Apartment							
			148	rm	Hotel							
			201,000	sf	General Office							
			24,000	sf	Specialty Retail							
			(300)	*sp*	*LRT Station parking (to be removed)*							
			(10,000)	*sf*	*Automobile Care Center (to be removed)*							
			(8,000)	*sf*	*Retail (to be removed)*							
			(12,000)	*sf*	*Furniture Store (to be removed)*							
12.	Synapse Office and Retail/Restaurant (ICC Site)	8888 Washington Boulevard	59,324	sf	General Office	1,146	82	18	100	33	91	124
			2,878	sf	Retail							
			3,184	sf	High-Turnover Restaurant							
			(9,992)	*sf*	*Automobile Repair Shop (to be removed)*							
13.	Market Hall - Washington Centinela	12403 Washington Boulevard	21,605	sf	Dining Hall	7,006	33	17	50	178	147	325
			5,230	sf	Retail							
14.	Culver City Innovation Plan Comprehensive Plan	9336 Washington Boulevard	345,007	sf	Production Space	3,527	302	49	351	59	310	369
15.	ECF Mixed-Use TOD	8700 Washington Boulevard	199	du	Apartment	2,881	97	105	202	136	113	249
			17,250	sf	Commercial Live/Work							
			5,000	sf	Restaurant							
			17,750	sf	Retail							
16.	Federal Express Mixed-Use TOD	3710 Robertson Boulevard	141	du	Apartment	2,856	107	73	180	80	188	268
			64,200	sf	Creative Office							
			30,042	sf	Retail/Restaurant							
					CITY OF CULVER CITY TOTAL	**41,442**	**1,848**	**918**	**2,766**	**1,314**	**2,069**	**3,383**

Table 7 (Cont.)
Related Project Locations, Descriptions, and Trip Generations

	PROJECT NAME	ADDRESS	SIZE		PROJECT DESCRIPTION	DAILY	AM PK HR IN	AM PK HR OUT	AM PK HR TOTAL	PM PK HR IN	PM PK HR OUT	PM PK HR TOTAL
CITY OF LOS ANGELES												
17.	Apartment Project	6733 Sepulveda Boulevard	176	du	Apartment	628	(31)	55	24	52	(40)	12
			33,484	sf	General Office							
18.	Charter Middle School	8540 S. La Tijera Boulevard	350	stu	Middle School	868	173	142	315	99	111	210
19.	Office Project	12575 Beatrice Street	199,500	sf	General Office	1,946	242	33	275	57	277	334
			(23,072)	*sf*	*General Office (to be removed)*							
20.	ICEF Vista Charter School Expansion	4471 Inglewood Boulevard	800	stu	High School/Middle School	275	55	45	100	31	36	67
21.	Jandy Creative Office	5405 S. Jandy Place	93,950	sf	Creative Office	613	86	10	96	30	154	184
22.	Ocean Charter School	12870 W. Panama Street	532	stu	Elementary/Middle School	1,320	263	216	479	150	169	319
23.	Office Project	11811 S. Teale Street	10,925	sf	General Office	121	15	2	17	5	26	31
24.	Apartment Project	6711 S Sepulveda Boulevard	180	du	Apartment	898	14	60	74	61	31	92
25.	The Palms Mixed-Use Project	10601 Washington Boulevard	132	du	Apartment	2,343	64	84	148	123	91	214
			26,000	sf	General Office							
			18,000	sf	Retail							
26.	LMU Master Plan	1 LMU Drive	7,800	stu	Enrollment	635	29	8	37	20	44	64
27.	Office Project	12777 W. Jefferson Boulevard	49,950	sf	General Office Expansion	550	68	9	77	17	83	100
28.	Marina Island	5000 Beethoven	156	du	Apartment	1,569	24	96	120	107	58	165
29.	Coffee Bean & Tea Leaf	6024 W. Jefferson Boulevard	53,762	sf	Manufacturing	1,737	134	52	186	35	103	138
			50,775	sf	Warehousing							
			90,054	sf	General Office							
			2,200	sf	Coffee Shop							
30.	Jefferson and La Cienega Project	3321, 3351 S. La Cienega Boulev	1,218	du	Apartment	10,136	319	419	738	467	382	849
			200,000	sf	General Office							
			50,000	sf	Supermarket							
			30,000	sf	Retail							
			20,000	sf	Restaurant							
			(20,000)	*sf*	*Light Industrial (to be removed)*							
			(43,313)	*sf*	*General Office (to be removed)*							
31.	Howard Hughes Center	6801 Center Drive	600	du	Apartment	8,370	660	327	987	439	958	1,397
			488,659	sf	Remaining development potential							
32.	Apartment Project	11612 W. Culver Boulevard	49	du	Apartment	447	12	26	38	28	15	43
			1,700	sf	Restaurant							
					CITY OF LOS ANGELES TOTAL	**32,456**	**2,127**	**1,584**	**3,711**	**1,721**	**2,498**	**4,219**
					RELATED PROJECTS TOTAL	**73,898**	**3,975**	**2,502**	**6,477**	**3,035**	**4,567**	**7,602**

Source:

1. *Trip Generation Study West Los Angeles College 2009 Facilities Master Plan* , prepared by Fehr & Peers on 4/2009. Estimated 25% of the total trip generation would occur as of the future condition scenarios.
2. *Traffic Impact Study for C3 Creative Office Development Project* , prepared by Crown City Engineers, Inc. on 8/2014. Project has been completed and is fully leased and estimated to be approximately half occupied. Trip generation reflects 50% occupancy.
3. *Traffic Impact Study for Proposed Entrada Creative Office Project* , prepared by Crain & Associates on 11/2016.
4. Trip generation from ITE Trip Generation Manual, 10th Edition for LUC 932 (High-Turnover [Sit-Down] Restaurant), 820 (Shopping Center), and 221 (Multifamily [Mid-Rise]).
5. Trip generation from ITE Trip Generation Manual, 10th Edition for LUC 820 (Shopping Center), 720 (Medical-Dental Office), and 710 (General Office).
6. Trip generation from ITE Trip Generation Manual, 10th Edition for LUC 710 (General Office).
7. Trip generation from ITE Trip Generation Manual, 10th Edition for LUC 254 (Assisted Living).
8. Trip generation from ITE Trip Generation Manual, 10th Edition for LUC 820 (Shopping Center) and 220 (Multifamily [Low-Rise]).
9. Trip generation from ITE Trip Generation Manual, 10th Edition for LUC 945 (Gasoline/Service Station with Convenience Market).
10. Trip generation from ITE Trip Generation Manual, 10th Edition for LUC 820 (Shopping Center) and 710 (General Office).

Table 7 (Cont.)
Related Project Locations, Descriptions, and Trip Generations

11. *Traffic Impact Analysis for Ivy Station Mixed-Use Transit Orientated Development at Washington Blvd. and National Blvd.* , prepared by Kimley-Horn and Associates on 10/2015.
12. *Draft Traffic Study for the 8888 Washington Boulevard Project* , prepared by Raju Associates, Inc. on 2/2017.
13. Trip generation from ITE Trip Generation Manual, 10th Edition for LUC 930 (Fast Casual Restaurant) and 820 (Shopping Center).
14. Trip generation from ITE Trip Generation Manual, 10th Edition for LUC 710 (General Office).
15. Trip generation from ITE Trip Generation Manual, 10th Edition for LUC 220 (Multifamily [Low-Rise]), 710 (General Office Building), 932 (High-Turnover [Sit-Down] Restaurant, and 820 (Shopping Center).
16. Trip generation from ITE Trip Generation Manual, 10th Edition for LUC 220 (Multifamily [Low-Rise]), 710 (General Office Building), and 820 (Shopping Center).
17. Project description and trip generation data from LADOT database (results generated on March 13, 2019). Project distribution based on Project presentation on 3/2016.
18. Project description and trip generation data from LADOT database (results generated on March 13, 2019).
19. *Traffic Impact Study for 12575 Beatrice Street Office Project* , prepared by Linscott, Law & Greenspan on 7/2016.
20. Project description and trip generation data from LADOT database (results generated on March 13, 2019).
21. Project description and trip generation data from LADOT database (results generated on March 13, 2019).
22. *Traffic Study for 6711 Sepulveda Project* , prepared by The Mobility Group on 9/2017.
23. Project description and trip generation data from LADOT database (results generated on March 13, 2019).
24. *Traffic Impact Analysis for Ocean Charter School* , prepared by Garland Associates on 4/2016.
25. Project description and trip generation data from LADOT database (results generated on March 13, 2019).
26. Project description and trip generation data from LADOT database (results generated on March 13, 2019). Estimated 25% of the total trip generation would occur as of the future conditions scenarios.
27. Project description and trip generation data from LADOT database (results generated on March 13, 2019).
28. Project description and trip generation data from LADOT database (results generated on March 13, 2019).
29. *Traffic Impact Study for 6024 Jefferson Mixed-Use Project* , prepared by Overland Traffic Consultants, Inc. on 9/2018.
30. *Traffic Impact Study for Jefferson and La Cienega Project* , prepared by Gibson Transportation Consulting, Inc. on 7/2015.
31. Trip generation from Third Amendment to Development Agreement for Howard Hughs Center, prepared by Crain & Associates on 2011.
32. Project description and trip generation data from LADOT database (results generated on March 13, 2019).

bd	Bed	sf	Square feet
du	Dwelling unit	sp	Parking space
rm	Room	stu	Student

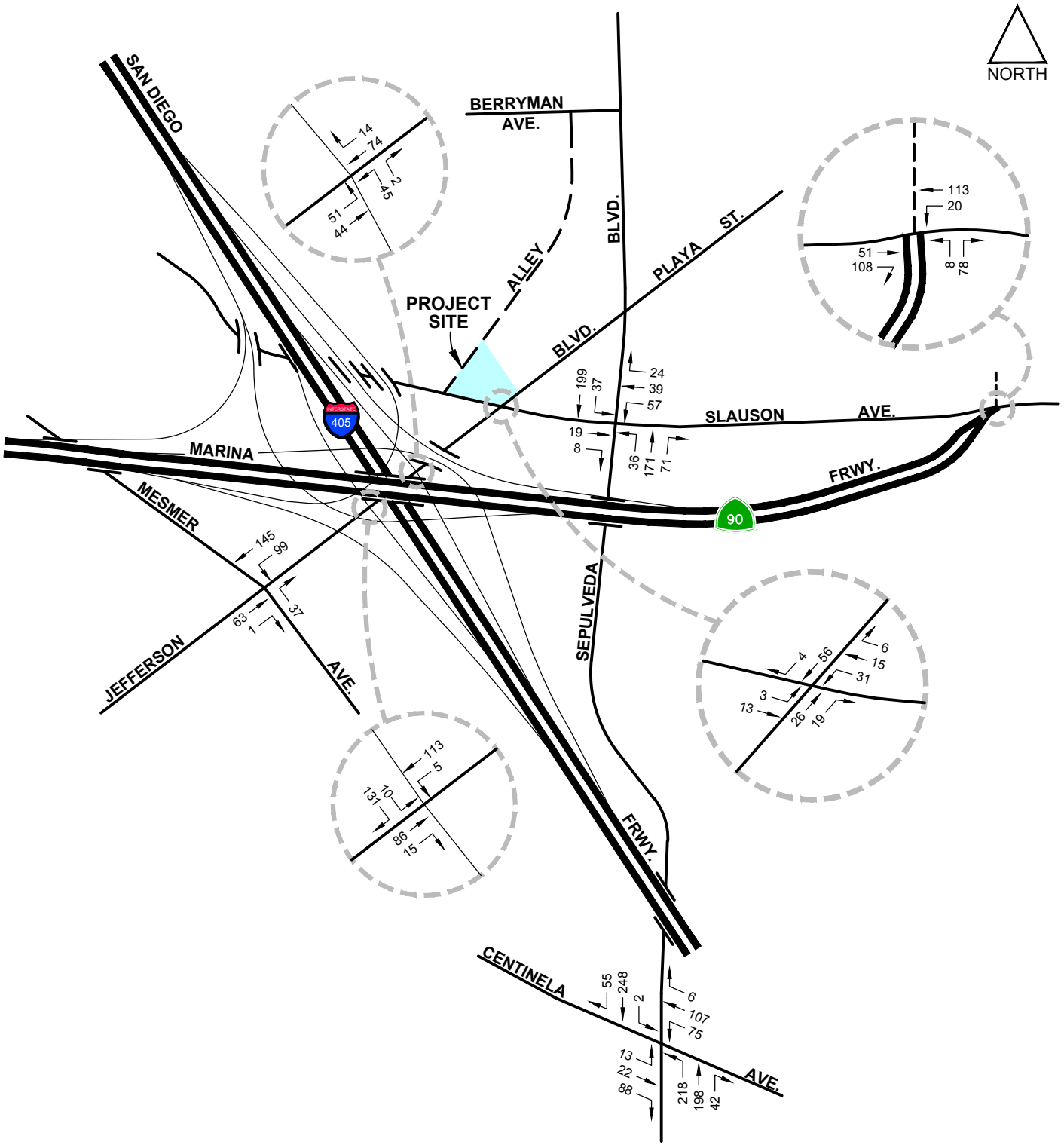

FIGURE 11(a)

9/3/2019

JeffersonHotelCulver\REPORT GRAPHICS20190618\AMRELPRJS

TOTAL RELATED PROJECT TRAFFIC VOLUMES
AM PEAK HOUR

CRAIN & ASSOCIATES
Transportation Planning
Traffic Engineering
300 Corporate Pointe, Suite 470
Culver City, California 90230
PH (310) 473 6508 F (310) 444 9771
www.crainandassociates.com

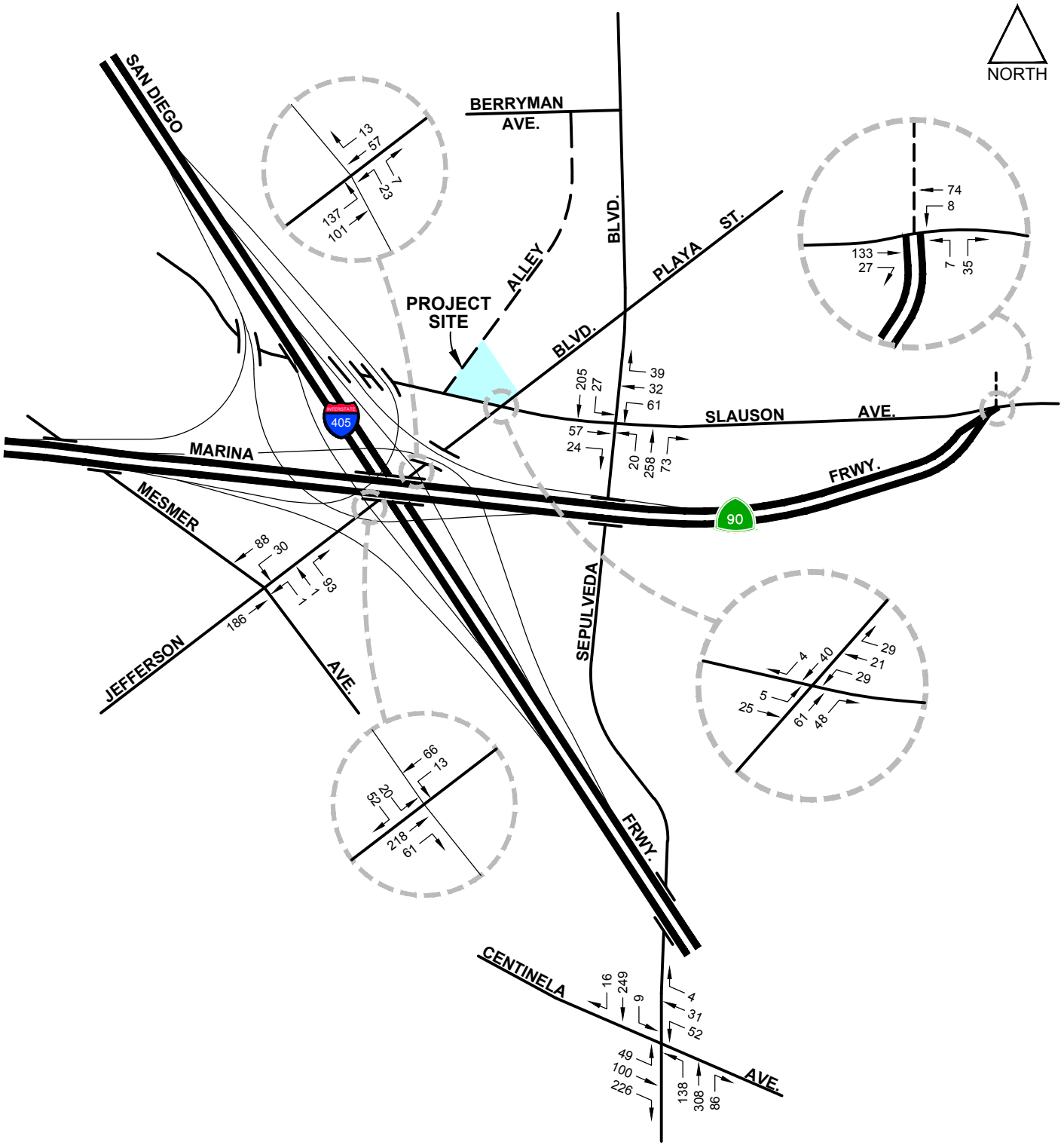

FIGURE 11(b)

9/3/2019

JeffersonHotelCulver\REPORT GRAPHICS20190618\PMRELPRJS

TOTAL RELATED PROJECT TRAFFIC VOLUMES
PM PEAK HOUR

CRAIN & ASSOCIATES
Transportation Planning
Traffic Engineering
300 Corporate Pointe, Suite 470
Culver City, California 90230
PH (310) 473 6508 F (310) 444 9771
www.crainandassociates.com

Future Highway System Improvements

A review of the City of Los Angeles Department of Public Works Bureau of Engineering Street Improvement Master Schedule did not reveal any projects in the design or construction phases that would impact any of the intersections in the study area. The City of Culver City does not anticipate any future roadway modifications within the study area that would affect the study intersections.

There are physical mitigation improvements associated with the Entrada creative office project, a related project, that would affect two Project study intersections. The Entrada creative office project physical improvements are scheduled to be in place prior to the opening year of the Project. These physical improvements include the following:

- Jefferson Boulevard & Mesmer Avenue: Restripe the south and north legs of Mesmer Avenue to allow the installation of a second northbound right-turn lane. Modify the traffic signal equipment at the intersection as necessary. No removal of on-street parking is anticipated due to this improvement.

- Centinela Avenue & Sepulveda Boulevard: Restripe Sepulveda Boulevard to provide a third northbound left-turn lane. Modify the raised island at the southeast corner of the intersection as necessary to provide a shared northbound through/right-turn lane. The northbound right-turn-only lane would be removed.

  Modify the channelization and raised median island on the west leg of Centinela Avenue, and restripe to provide three westbound departure lanes to receive the additional lane of left-turning traffic from Sepulveda Boulevard. Modify the traffic signal equipment at this intersection as necessary. All detectors for all the approaches tied to this intersection shall be functional to realize the operational improvements anticipated

in this mitigation. No removal of on-street parking is anticipated due to this improvement.

Both the Los Angeles Mobility Plan 2035 and the Culver City Bicycle and Pedestrian Master Plan identify several roadways to classify as Class III bicycle routes near the Project site; however this designation will not affect lane configurations or phasing characteristics of any of the study intersections.

Analysis of Future (2024) Traffic Conditions

The analysis of the future year 2024 traffic conditions in the study area was performed using the same CMA procedures described previously in this report. As described in the previous section, the future condition scenario was examined assuming implementation of all planned roadway improvement projects associated with the Entrada creative office project. Accordingly, future traffic volumes for the analysis were developed as follows:

- As previously discussed, future "Without Project" traffic volumes for the year 2024 were determined by superimposing area-wide ambient traffic growth and the total related project traffic volumes onto existing (2018) traffic volumes. The resulting Future (2024) Without Project AM and PM peak-hour intersection volumes are provided in Figures 12(a) and 12(b), respectively. These are the "benchmark" volumes used for the "Without Project" case at each of the study intersections.

- These projected traffic volumes represent a conservative condition due to several factors: some related projects may not be built as described or within the study time frame; some related projects may implement trip reduction measures; transit usage may increase; and the effects of trip linkages have not been credited.

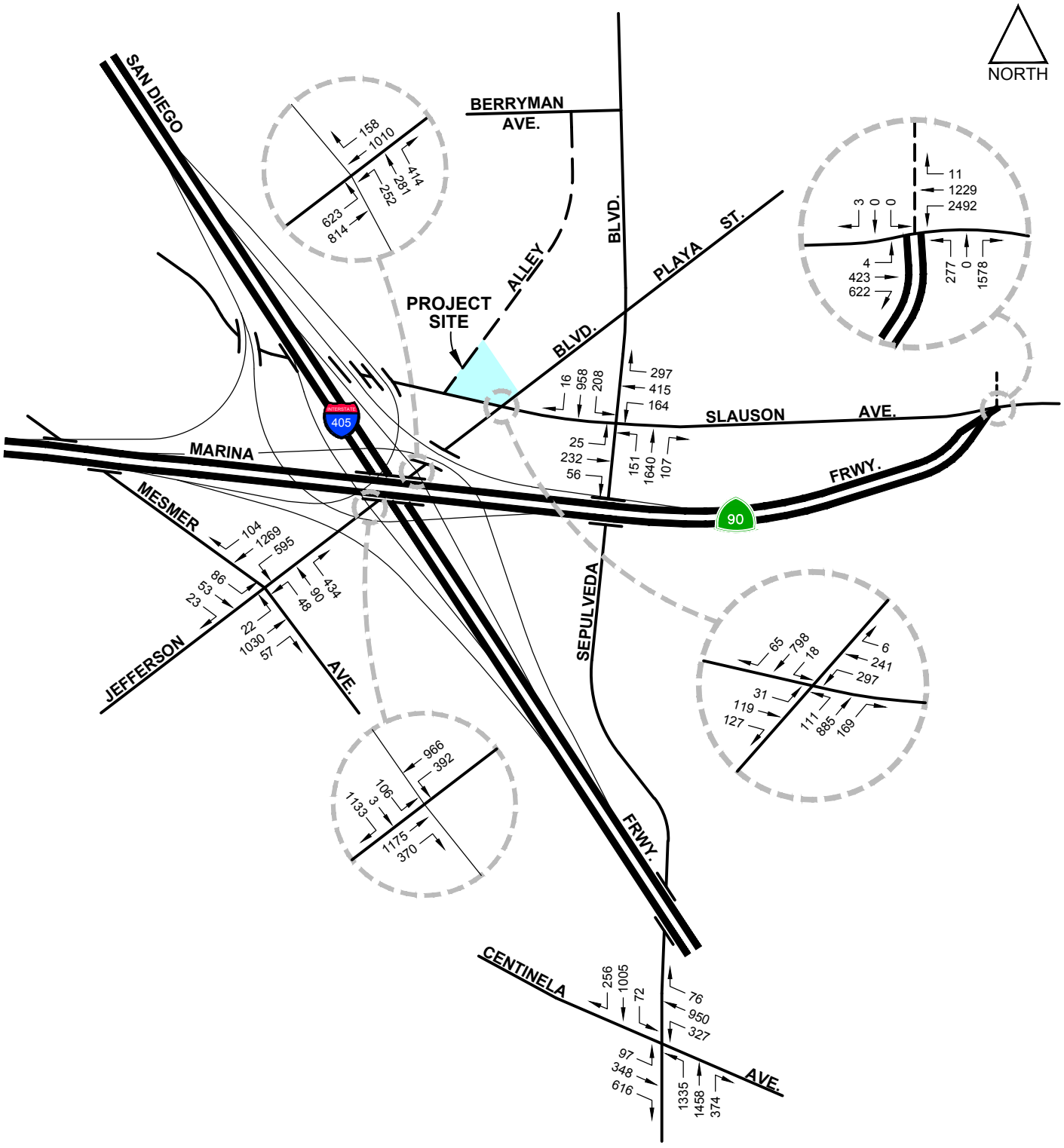

FIGURE 12(a)

9/3/2019

JeffersonHotelCulver\REPORT GRAPHICS20190618\AM2024WO

FUTURE (2024) TRAFFIC VOLUMES
WITHOUT PROJECT
AM PEAK HOUR

CRAIN & ASSOCIATES
Transportation Planning
Traffic Engineering
300 Corporate Pointe, Suite 470
Culver City, California 90230
PH (310) 473 6508 F (310) 444 9771
www.crainandassociates.com

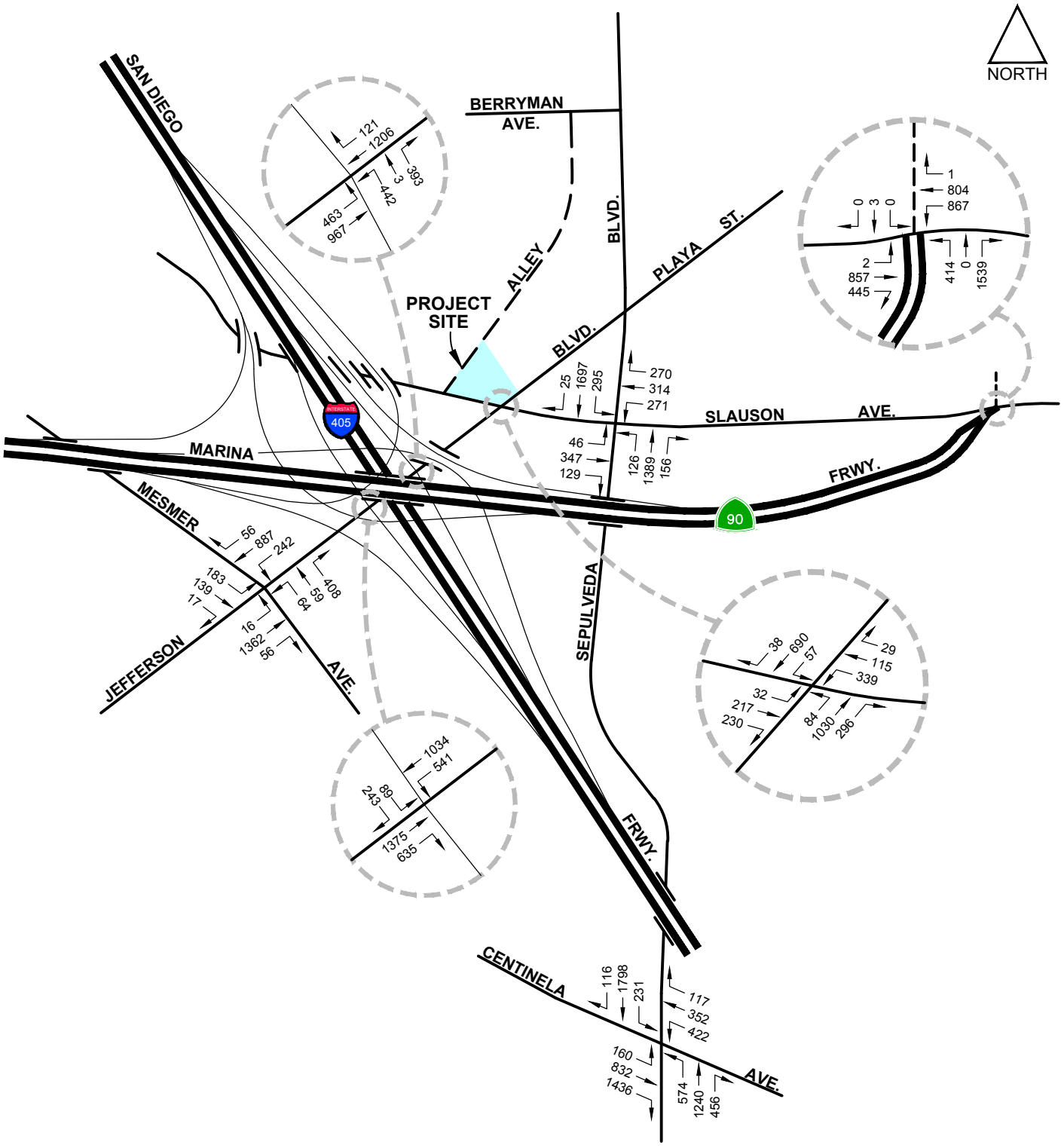

FIGURE 12(b)

9/3/2019

JeffersonHotelCulver\REPORT GRAPHICS20190618\PM2024WO

FUTURE (2024) TRAFFIC VOLUMES
WITHOUT PROJECT
PM PEAK HOUR

CRAIN & ASSOCIATES
Transportation Planning
Traffic Engineering
300 Corporate Pointe, Suite 470
Culver City, California 90230
PH (310) 473 6508 F (310) 444 9771
www.crainandassociates.com

- Project traffic volumes, as determined earlier, were then added to the Future (2024) Without Project traffic volumes to develop the Future (2024) With Project traffic volumes. The Future (2024) With Project volumes were then used to determine traffic impacts directly attributable to the Project. The Future (2024) With Project AM and PM peak-hour traffic volumes are shown in Figures 13(a) and 13(b), respectively

The results of the analysis of future traffic conditions at the study intersections are summarized in Table 8. As shown, under Future (2024) Without Project traffic conditions, traffic operations are expected to degrade when compared with existing conditions due to ambient and related project traffic growth. Under Future (2024) Without Project conditions, four intersections are projected to operate at LOS C or better during both peak hours. The intersection of Jefferson Boulevard & I-405 Freeway Southbound Ramps would degrade to LOS F during the AM peak hour and LOS C during the PM peak hour, while the intersection of Jefferson Boulevard & I-405 Freeway Northbound Ramps would degrade to LOS F during the PM peak hour. The intersection of Centinela Avenue & Sepulveda Boulevard would degrade to LOS E and LOS F conditions during the AM and PM peak hours, respectively.

Under Future (2024) With Project conditions, six of the seven study intersections would maintain the same LOS as the Without Project scenario during both peak hours. The one intersection that would see a worsening LOS is the intersection of Slauson Avenue & Marina Freeway, which would degrade from LOS C (0.799 V/C ratio) to LOS D (0.802 V/C ratio) during the AM peak hour. Three intersections would continue to operate at LOS C or better during both peak hours. The intersections of Jefferson Boulevard & I-405 Freeway Southbound Ramps, Jefferson Boulevard & I-405 Freeway Northbound Ramps, and Centinela Avenue & Sepulveda Boulevard would continue to operate at LOS F during one or both peak hours.

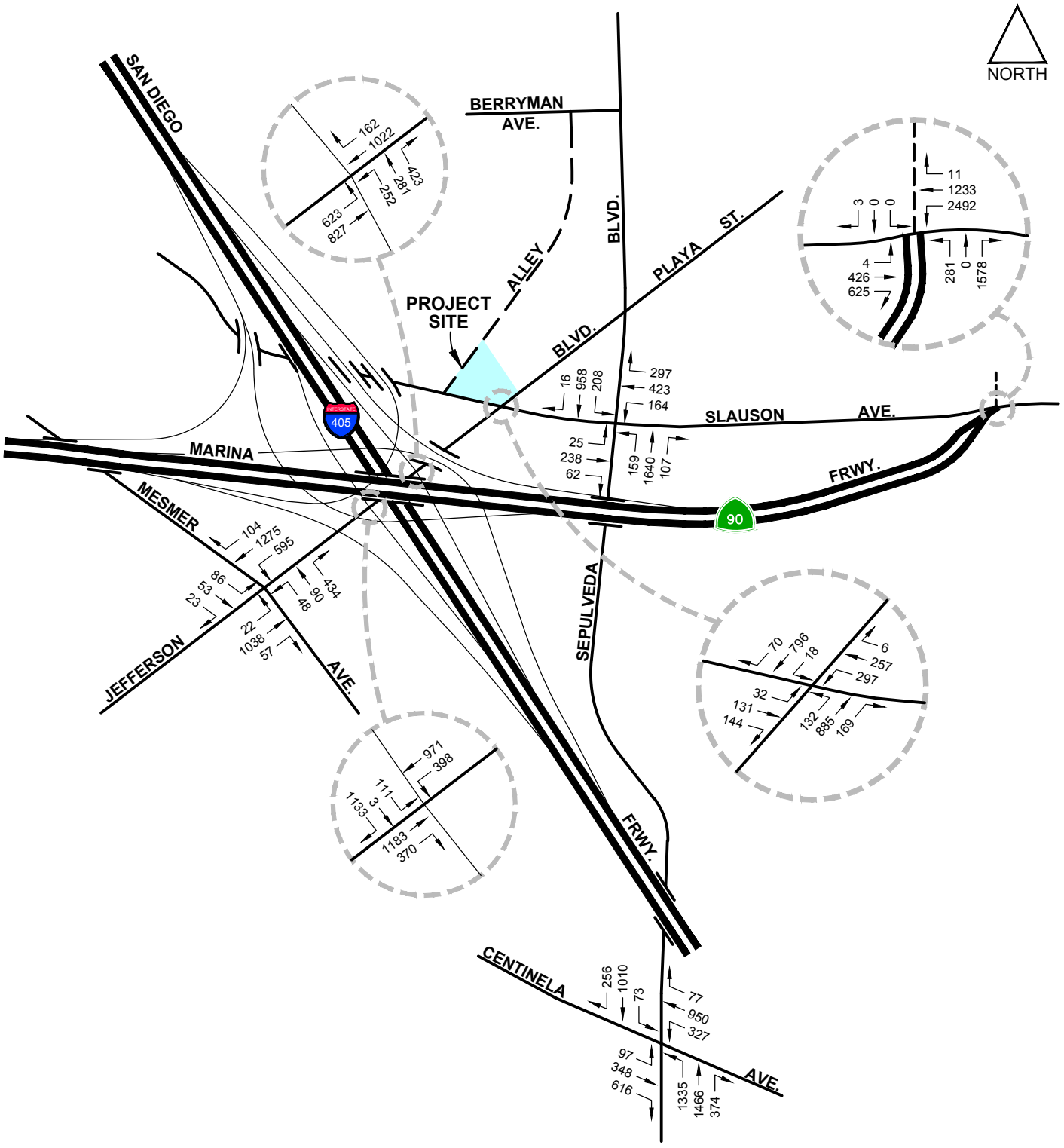

FIGURE 13(a)

9/3/2019

JeffersonHotelCulver\REPORT GRAPHICS20190618\AM2024WP

FUTURE (2024) TRAFFIC VOLUMES
WITH PROJECT
AM PEAK HOUR

CRAIN & ASSOCIATES
Transportation Planning
Traffic Engineering
300 Corporate Pointe, Suite 470
Culver City, California 90230
PH (310) 473 6508 F (310) 444 9771
www.crainandassociates.com

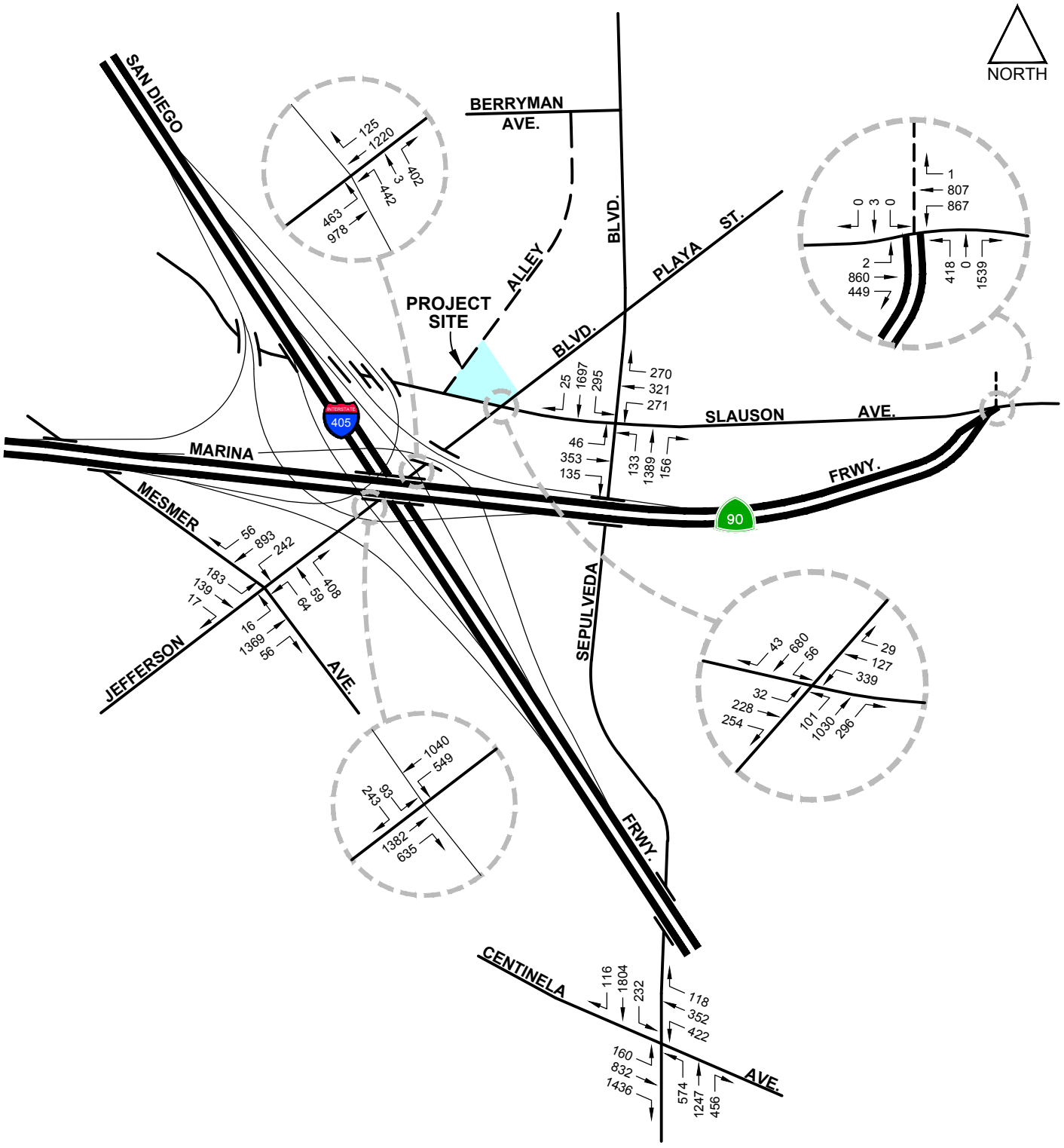

FIGURE 13(b)

9/3/2019

JeffersonHotelCulver\REPORT GRAPHICS20190618\PM2024WP

FUTURE (2024) TRAFFIC VOLUMES
WITH PROJECT
PM PEAK HOUR

CRAIN & ASSOCIATES
Transportation Planning
Traffic Engineering
300 Corporate Pointe, Suite 470
Culver City, California 90230
PH (310) 473 6508 F (310) 444 9771
www.crainandassociates.com

Table 8

Critical Movement Analysis and Levels of Service Summary: Existing (2018) and Future (2024) Without and With Project Conditions

				Existing (2018)						Future (2024)					
				Baseline		With Project				Without Project		With Project			
No.	Intersection	City Location	Peak Hour	V/C	LOS	V/C	LOS	Impact	Sig.?	V/C	LOS	V/C	LOS	Impact	Sig.?
1	Jefferson Blvd. &	Culver City/	AM	0.569	A	0.572	A	0.003	No	0.695	B	0.697	B	0.002	No
	Mesmer Ave.[1]	Los Angeles	PM	0.501	A	0.502	A	0.001	No	0.572	A	0.573	A	0.001	No
2	Jefferson Blvd. &	Culver City/	AM	0.877	D	0.879	D	0.002	No	1.062	F	1.064	F	0.002	No
	I-405 Fwy. SB Ramps[1]	Los Angeles	PM	0.653	B	0.658	B	0.005	No	0.779	C	0.783	C	0.004	No
3	Jefferson Blvd. &	Culver City/	AM	1.051	F	1.068	F	0.017	Yes	1.145	F	1.163	F	0.018	Yes
	I-405 Fwy. NB Ramps[1]	Los Angeles	PM	0.972	E	0.988	E	0.016	Yes	1.182	F	1.198	F	0.016	Yes
4	Slauson Ave. &	Culver City	AM	0.368	A	0.393	A	0.025	No	0.425	A	0.451	A	0.026	No
	Jefferson Blvd.[2]		PM	0.439	A	0.446	A	0.007	No	0.515	A	0.521	A	0.006	No
5	Slauson Ave. &	Culver City	AM	0.485	A	0.488	A	0.003	No	0.606	B	0.609	B	0.003	No
	Sepulveda Blvd.[2]		PM	0.495	A	0.501	A	0.006	No	0.657	B	0.659	B	0.002	No
6	Slauson Ave. &	Culver City	AM	0.729	C	0.732	C	0.003	No	0.799	C	0.802	D	0.003	No
	Marina Fwy.[2]		PM	0.613	B	0.613	B	0.000	No	0.700	B	0.700	B	0.000	No
7	Centinela Ave. &	Culver City/	AM	0.894	D	0.896	D	0.002	No	0.957	E	0.959	E	0.002	No
	Sepulveda Blvd.[1]	Los Angeles	PM	0.879	D	0.881	D	0.002	No	1.109	F	1.110	F	0.001	No

Notes

[1] Analysis results based on City of Los Angeles CMA methodology and assumptions.

[2] Analysis results based on City of Culver City CMA methodology.

Residential Streets

As part of the future (2024) traffic conditions evaluation, a residential street impact analysis was conducted to determine the potential impacts of Project trips to residential street segments within the nearby neighborhood of Sunkist Park. Table 9 summarizes the existing and future ADT volumes at the three study residential street segment locations. In order to develop future condition segment volumes, the existing segment volumes were adjusted upward via a 1.0 percent ambient traffic growth factor and with related project traffic volumes. The combined traffic volume increases from these two sources provided the basis for the analysis of the Future (2024) Without Project condition. Project traffic was then analyzed as an incremental addition to the Future (2024) Without Project traffic volumes, forming the traffic volumes for the Future (2024) With Project condition.

Table 9
Residential Street Analysis:
Existing (2018) and Future (2024) Conditions

			Future (2024)				
Residential Street Segment	Existing ADT (2018)	Future Without Project ADT	Project-Related ADT	Future With Project ADT	Project % Increase in ADT	Significant?
1 Segrell Way n/o Slauson Ave.	1540	1635	74	1709	4%	No
2 Culver Park Drive n/o Slauson Ave.	673	714	74	788	9%	No
3 Slauson Ave. w/o Segrell Way	3925	4641	58	4699	1%	No

The Project is not expected to contribute appreciable traffic volumes to these residential street segments, given that inbound Project traffic must enter from westbound Slauson Avenue and outbound Project traffic would egress onto the adjacent alley. The adjacent alley would provide the most convenient path northerly through the Sunkist Park neighborhood to Berryman Avenue and Sawtelle Boulevard, as it would not require traveling south first to then head north. Although the Project is not expected to contribute noticeable traffic volumes to

the three study residential street segments, in order to provide a conservative analysis, an evaluation of these street segments was performed assuming the full five percent of Project traffic expected to utilize the adjacent alley would instead use Segrell Way, Culver Park Drive, or Slauson Avenue to traverse the Sunkist Park neighborhood. The results of this conservative analysis are shown in Table 9.

The City of Culver City defines a significant (residential street segment) traffic impact attributable to a project based on the anticipated future project and street segment ADT volumes. The significant impact thresholds for residential streets are summarized in Table 10.

Table 10
Culver City's Significant Impact Thresholds
At Residential Streets

Projected Average Daily Traffic (ADT) With Project	Project-Related Increase In Average Daily Traffic (ADT) Volume
999 or less	120 or more
1,000 to 1,999	12 percent or more of final ADT
2,000 to 2,999	10 percent or more of final ADT
3,000 or more	8 percent or more of final ADT

As shown in Table 9, the Project-related increases in ADT volumes would represent less than 10 percent of the Future (2024) With Project ADT volumes. Based on the criteria summarized in Table 10 and the results shown in Table 9, the Project would not significantly impact any of the three study residential street segments.

Significant Traffic Impact Criteria

Signalized Intersections

The City of Culver City defines a significant (signalized intersection) traffic impact attributable to a project as occurring when the project causes an increase in the V/C ratio of 0.050 or more

when the final (with project) LOS is C, an increase of 0.040 or more when the final LOS is D, or an increase of 0.020 or more when the final LOS is E or F.

The City of Los Angeles considers a project to cause a significant (signalized intersection) traffic impact when project-related traffic results in a V/C ratio increase of 0.040 or more at a final LOS C, an increase of 0.020 or more at a final LOS D, and an increase of 0.010 or more at a final LOS E or F.

For intersections solely within one jurisdiction, that jurisdiction's significance criteria were applied. For intersections shared between jurisdictions, the significance criteria of the jurisdiction with operational control of the traffic signal or other right-of-way control were assumed.

Based on these criteria and as shown previously in Table 8, the Project would significantly impact one study intersection during both peak hours -- Jefferson Boulevard & I-405 Freeway Northbound Ramps.

Queuing Analyses

Multiple queuing analyses were conducted for the Project based on requests from Culver City staff and community concerns. The City requested two queuing analyses as part of the traffic impact study MOU process: 1) evaluate the With Project conditions for the northeastbound Jefferson Boulevard left-turn lane at Slauson Avenue to determine if there would be spillover impacts to the Jefferson Boulevard northeastbound through lanes and 2) evaluate potential inbound Project traffic spillover onto westbound Slauson Avenue at the Project site entry driveways. Additionally, the Project had its first community meeting in the Sunkist Park neighborhood on April 16, 2019. During that meeting, Sunkist Park community members expressed concern regarding existing weekday PM peak-hour conditions along and adjacent to

Slauson Avenue, near the Project site. In order to address these concerns, a queuing and delay study was conducted to determine the existing queuing and delay conditions for vehicles traveling south on the unnamed alley, Segrell Way, and Culver Park Drive and turning left to travel eastbound on Slauson Avenue. The results of these analyses are provided below.

Jefferson Boulevard, Northeastbound Left-Turns to Slauson Avenue

At the request of the City, a queuing analysis of the future traffic conditions for the northeastbound Jefferson Boulevard left-turn lane at Slauson Avenue was undertaken to determine potential Project spillover impacts to the adjacent northeastbound through lane. Under the Future (2024) Without Project scenario, the northeastbound left-turn lane would experience spillover onto the northeastbound through lane during the weekday AM and PM peak hours of approximately 115 feet (or approximately five vehicles based on a 25-foot length per vehicle) and approximately 82 feet (or approximately three vehicles), respectively, based on the 95th percentile queue length for this turning movement. In the Future (2024) With Project scenario, the Project would increase the vehicle spillover by 23 feet (or approximately one vehicle) in the AM peak and 21 feet (or approximately one vehicle) in the PM peak hour, respectively. The Project would also increase the northeastbound through lane vehicle queues by approximately 12 feet and 2 feet in the AM and PM peak hours, respectively. Table 11 summarizes the queuing analysis, and the Synchro calculation worksheets are provided in Appendix J.

Table 11

Jefferson Boulevard – Northeastbound Left-Turn Queuing Summary

INTERSECTION	SCENARIO	PEAK HOUR	QUEUE LENGTH[1]	LANE GROUP NEBL	NEBT	NEBR
4) Slauson Avenue & Jefferson Boulevard			**Storage**	55	470	70
	Future (2024) Without Project	AM	95th Percentile	170	272	119
		PM		137	384	268
	Future (2024) With Project	AM	95th Percentile	193	284	119
		PM		158	386	268
		AM	DIFFERENCE	23	12	0
		PM		21	2	0

Notes

[1] Queue lengths measured in feet.

An increase in the Jefferson Boulevard northeastbound left-turn storage would help alleviate the Project's contribution to the queuing spillover. The City reviewed multiple alternatives for providing additional capacity to the northeastbound left-turn lane, including:

- Extending the existing northeastbound left-turn lane by an additional 10 feet while reducing the southwestbound left-turn lane to Selmaraine Drive by 25 feet;
- Removing the southwestbound left-turn lane to Selmaraine Drive in order to provide additional storage capacity for the northeastbound left-turn lane to Slauson Avenue; and
- Providing a second northeastbound left-turn lane by reducing several of the lane widths on Jefferson Boulevard and reducing the southwestbound left-turn storage lane to Selmaraine Drive, along with prohibiting parking and modifying striping and signage on Slauson Avenue to provide an additional westbound receiving lane.

The City determined the most feasible design for providing sufficient left-turn storage would be to provide an additional left-turn lane for the northeastbound left-turn movement from Jefferson Boulevard to Slauson Avenue. Based on this direction, a conceptual striping plan was prepared to illustrate the potential reconfiguration of Jefferson Boulevard and Slauson Avenue to provide

dual left-turn lanes. The northeastbound left-turn lane is part of back-to-back left-turn lanes on Jefferson Boulevard, with the adjacent southwestbound left-turn lane providing access to Selmaraine Drive. The provision of dual northeastbound left-turn lanes would increase the storage length for this movement from approximately 55 feet via a single lane to approximately 165 feet via two lanes (62 feet in the inner left-turn lane and 103 feet in the outer left-turn lane). The southwestbound left-turn lane to Selmaraine Drive would be reduced from approximately 65 feet to 40 feet. The reduction of the southwestbound left-turn lane length is supported by intersection traffic volume counts conducted on August 6, 2019 (see Appendix A). Based on weekday AM and PM peak-period counts, the overall peak-hour volume for the southwestbound left-turn movement to Selmaraine Drive was 12 vehicles. With such low left-turn volumes, the southwestbound left-turn storage for Selmaraine Drive can be reduced in order to accommodate more storage for the heavier northeastbound left-turn movement to Slauson Avenue.

The dual left-turn lanes on the northeastbound Jefferson Boulevard approach would require an additional receiving lane on westbound Slauson Avenue. Currently, there is only one receiving lane on Slauson Avenue west of Jefferson Boulevard. Per direction from City staff, the conceptual design has been developed with a striped lane drop occurring between Jefferson Boulevard and Culver Park Drive. As part of this design, parking would be prohibited on the north side of Slauson Avenue. Appendix F includes the conceptual striping plan as described above. The dual northeastbound left-turn lanes were not included in the CMA calculations for post-Project conditions. Although the conceptual plan has been reviewed by City staff, the final design has not been approved and, therefore, it is more conservative to assume only a single left-turn lane.

Project Site Entry Driveways

A queuing analysis was conducted to determine if inbound Project traffic would spillover onto westbound Slauson Avenue. The Project site would provide dual entry lanes from westbound Slauson Avenue. The drive aisle closer to the hotel would serve as a passenger drop-off and pick-

up area. This drive aisle can accommodate approximately three vehicles. The second drive aisle would allow entering vehicles to access the parking ramp down to the two subterranean parking levels. Access to the subterranean parking garage would not be gate controlled. Parking would generally function with self-park operation. Valet-assist parking would be provided on the two subterranean parking levels in order to maintain safe and efficient use of the tandem spaces, to a greater extent for exiting vehicles. Since most incoming vehicles will be self-parked and the parking garage is situated so that entering vehicles will drive down a ramp to access the parking spaces, there would be considerable queuing capacity available for inbound vehicles.

Per the trip rates provided in the ITE *Trip Generation Manual*, the highest number of inbound trips for a hotel use would occur during the Saturday peak hour of the generator. During the Saturday peak hour, the Project would be expected to generate a total of 126 trips (71 inbound and 55 outbound). With an average of just over one vehicle arriving per minute during this overall site peak hour, spillover onto Slauson Avenue is not expected to occur given the proposed parking layout and self-park with valet-assist parking operations of the Project. In the event that the passenger drop-off and pick-up area is at capacity (e.g., due to an event in the Project's conference/meeting room space), arriving hotel patrons would be directed to the first subterranean parking level to drop-off or pick-up their passengers to avoid spillover onto Slauson Avenue. Additionally, during special events or when higher-than-expected demand is experienced, Project valet staffing can be augmented to provide an adequate number of valet attendants in order to process inbound vehicles more quickly. Therefore, spillover onto Slauson Avenue is not anticipated to occur based on the layout and operation of Project parking.

Slauson Avenue, Unnamed Alley, Segrell Way, and Culver Park Drive

A queuing and delay study was conducted along Slauson Avenue, the unnamed alley, Segrell Way, and Culver Park Drive in the vicinity of the Project as a direct result of public comments provided at the first Project community meeting. Community members expressed their

concern regarding the existing traffic conditions along these roadways and, more specifically, vehicles traveling southbound along the unnamed alley, Segrell Way, and Culver Park Drive that make left-turns onto eastbound Slauson Avenue. It was suggested that these vehicles have a difficult time turning left into the eastbound Slauson Avenue traffic stream due to queuing on the Slauson Avenue approach to Jefferson Boulevard, and that these vehicles will, at times, attempt to force their way into eastbound traffic and block westbound Slauson Avenue traffic flow.

To better understand the existing operating conditions on these roadways, traffic volume, vehicle queue, and vehicle delay data were collected on April 25, 2019 during the weekday morning and afternoon commute peak periods of 7:00 AM to 10:00 AM and 3:00 PM to 6:00 PM. The data collected included the following:

- Queue lengths in terms of the number of vehicles for all turning movements on the Slauson Avenue eastbound approach to Jefferson Boulevard. The data were collected at one-minute intervals and included notes identifying the time periods when queues extended past the unnamed alley, Segrell Way, and Culver Park Drive.

- Queue lengths (number of vehicles) and vehicle delay (in seconds) on the southbound approaches of the unnamed alley, Segrell Way, and Culver Park Drive to Slauson Avenue, by turning movement. Additionally, the data identified driver behavior that impeded proper traffic flow (e.g., southbound left-turns onto Slauson Avenue that impeded westbound traffic flow on Slauson Avenue or southbound left-turns that blocked one of the Slauson Avenue eastbound lanes at Jefferson Boulevard).

During the AM peak period from 7:00 AM to 10:00 AM, the maximum queues observed by turning movement along Slauson Avenue occurred during the 8:00 AM to 9:00 AM hour, with a maximum queue of 2 vehicles in the left-turn lane, 9 vehicles in the through lane, and 3 vehicles in the right-turn lane. It should be noted that the maximum queues by turning movement were

not observed at the same time. For the overall eastbound approach, there was one instance when the queue extended to the unnamed alley and two instances when the queues extended to Segrell Way during the AM peak hour. For the PM peak period from 3:00 PM to 6:00 PM, the maximum queues observed by turning movement occurred during the 5:00 PM to 6:00 PM hour and consisted of 6 vehicles in the left-turn lane, 11 vehicles in the through lane, and 8 vehicles in the right-turn lane. Like the AM peak hour, the maximum queues by turning movement did not occur simultaneously. Overall, the eastbound approach experienced seven instances when vehicle queues extended to the unnamed alley and four instances when the queues extended to Segrell Way during the PM peak hour.

To better understand current conditions experienced at the intersections of Slauson Avenue and the unnamed alley, Segrell Way, and Culver Park Drive, a combination of traffic counts and queue/delay data were collected. Based on a review of these data, during the AM and PM peak hours, an average of approximately 80 percent of southbound vehicle delays were not recorded because vehicles failed to stop at the stop signs. Table 12 summarizes vehicle queuing/delays on the southbound approaches of the unnamed alley, Segrell Way, and Culver Park Drive.

Table 12
Southbound Approaches of Unnamed Alley, Segrell Way, and Culver Park Drive
Queuing/Delay Summary

Intersection	Peak Hour	Average Delay (veh/sec)	Level of Service	Total Number of Delayed Vehicles	Maximum Queue Observed
Unnamed Alley & Slauson Avenue	8-9 AM	16.7	LOS C	6 vehicles	1 vehicle
	5-6 PM	10.6	LOS B	16 vehicles	1 vehicle
Segrell Way & Slauson Avenue	8-9 AM	10.9	LOS B	7 vehicles	4 vehicles
	5-6 PM	8.9	LOS A	16 vehicles	4 vehicles
Culver Park Drive & Slauson Avenue	8-9 AM	8.8	LOS A	24 vehicles	3 vehicles
	5-6 PM	6.0	LOS A	2 vehicles	1 vehicle

As indicated in Table 12, all intersections are operating at excellent-to-good levels of service (LOS A to LOS C). While there were instances of eastbound queues extending along Slauson Avenue from Jefferson Boulevard to Segrell Way as noted above, there were no occurrences when southbound left-turning vehicles were observed impeding westbound traffic on Slauson Avenue during the peak periods. This is further supported by the observations indicating that an overwhelming majority of southbound vehicles do not stop at the stop signs, which is a direct result of available gaps in Slauson Avenue traffic flow. Consideration of more traffic enforcement in this area may reduce some of the community's concerns. The traffic counts and queue/delay data are provided in Appendix A.

Congestion Management Program (CMP) Impact Analysis

The traffic impact guidelines of the current 2010 CMP for Los Angeles County require analysis of all CMP arterial monitoring locations where a project could add a total of 50 or more trips during either peak hour. Additionally, all freeway monitoring locations where a project could add 150 or more trips in either direction during the peak hours are to be analyzed.

The CMP arterial monitoring locations nearest to the Project site are Sepulveda Boulevard & Manchester Avenue (approximately 2.0 miles south of the Project site), Overland Avenue & Venice Boulevard (approximately 2.1 miles north), and La Cienega Boulevard & Centinela Avenue (approximately 1.8 miles southeast). Based on a review of the Project trip generation (shown in Table 5) and the Project trip distribution patterns (shown in Figure 5), the Project is expected to contribute minimal traffic volumes to these CMP monitoring intersections during the weekday AM and PM peak hours. Further, it is expected that Project traffic volume contributions to more distant CMP arterial monitoring locations would be even lower, given that Project traffic would disperse across an increasing number of roadways when farther from the Project site. With Project traffic contributions well below the 50-trip threshold, no

significant Project impacts to CMP arterial monitoring locations are forecast and no additional arterial intersection analysis is necessary.

In terms of CMP freeway monitoring segment analysis, a review of Project's trip generation indicates that the Project would not generate more than 42 net directional (inbound or outbound) trips during either peak hour. Therefore, the Project would contribute well below the 150 directional-trip threshold to all CMP freeway monitoring segments, no significant Project impacts to CMP freeway monitoring locations are forecast, and no additional freeway analysis is necessary.

TRANSIT IMPACT ANALYSIS

Metro and Culver CityBus provide transit service in the Project vicinity. As shown in Table 13, there are five Culver City Bus lines and four Metro bus lines that serve the Project site. On weekdays, these bus lines operate approximately 42 buses per hour (both directions) during the AM and PM peak periods within the study area. Assuming a seating, non-standing service capacity of 40 passengers per bus, these buses provide a service capacity of 1,680 passengers per hour during the AM and PM peak periods.

Table 13
Weekday Peak-Hour Transit Service within Project Area

Service Provider	Bus Line	Buses Per Hour (Both Directions)
Culver City Bus	2	2
Culver City Bus	3	6
Culver City Bus	4	2
Culver City Bus	6	4
Culver City Bus	R6	6
Metro	108	8
Metro	110	6
Metro	217	2
Metro	358	6
	Total:	**42**

The analysis of future transit conditions was performed using the general transit impact methodology in Appendix D.8.4 of Metro's CMP. Under this methodology, a multiplication factor of 1.4 is used to convert vehicle trips to person trips. A factor of 7.0 percent is applied to the resulting person trips to estimate the number of person trips utilizing transit, given that the Project is within a one-quarter mile distance of a CMP transit corridor (Sepulveda Boulevard)

and the proposed/existing uses are commercial. In this case, the Project net generation of 72 AM peak-hour and 67 PM peak-hour vehicle trips would convert to 101 AM peak-hour and 94 PM peak-hour person trips. Of these person trips, approximately seven person trips per hour would be expected to use transit during both the AM and PM peak hours per the CMP methodology.

Compared to the Project area transit passenger capacity of 1,680 persons per peak hour, the Project person trips would represent less than one-half percent of this capacity during each peak hour. This amount of transit usage by the Project would not result in a significant transit impact, and no Project transit mitigation measures are required.

VMT ANALYSIS

Following the passage of Senate Bill (SB) 743, the State of California's Governor's Office of Planning and Research (OPR) was tasked with developing new guidelines for evaluating transportation impacts under the California Environmental Quality Act (CEQA). These guidelines were intended to shift the transportation performance metric from automobile delay and LOS to one that would promote the reduction of greenhouse gas emissions and the development of multimodal and diverse transportation networks. As a result, OPR determined that, under the proposed update to the CEQA guidelines, vehicle miles traveled (VMT) would be established as the primary metric for evaluating environmental and transportation impacts.

In response to the updates to the CEQA guidelines, the City of Culver City updated its *Transportation Study Criteria and Guidelines* in July 2020 to conform to the requirements of SB 743. The new guidelines replaced the 2012 *Traffic Study Criteria for the Review of Proposed Development Projects within the City of Culver City* and shifted the performance metric for evaluating transportation impacts under CEQA from LOS to VMT for studies completed within the City. The new criteria and guidelines establish thresholds to identify development projects that would cause substantial VMT.

Under the new criteria and guidelines, the first step in performing a VMT analysis for a land use project is to perform a VMT screening analysis. A land use project that meets any of the following VMT screening thresholds is presumed to have a less-than-significant VMT impact and is therefore cleared from having to perform further VMT analysis:

1. Small land use projects that result in less than 250 daily or 25 peak-hour trips;
2. Land use projects within the 0.5-mile radius of these key Transit Priority Areas (TPAs): Metro E (Expo) Line Culver City Station, Metro E (Expo) Line La Cienega Station,

Westfield-Culver City Transit Center, and Sepulveda/Venice Boulevard intersection. The City's TPAs are displayed graphically in Figure 14;

3. Land use projects located within any TPA where at least 15 percent of the on-site residential units are affordable;
4. Affordable housing projects where 100 percent of the dwelling units are affordable; and
5. Local-serving retail projects with less than 50,000 square feet of floor area at a single store.

Given the Project's proximity (approximately one block) to the Westfield-Culver City Transit Center, the City considers the Project site to be in a key TPA. Therefore, based on the key TPA screening threshold, the Project is presumed to have a less-than-significant VMT impact and no further VMT analysis is required.

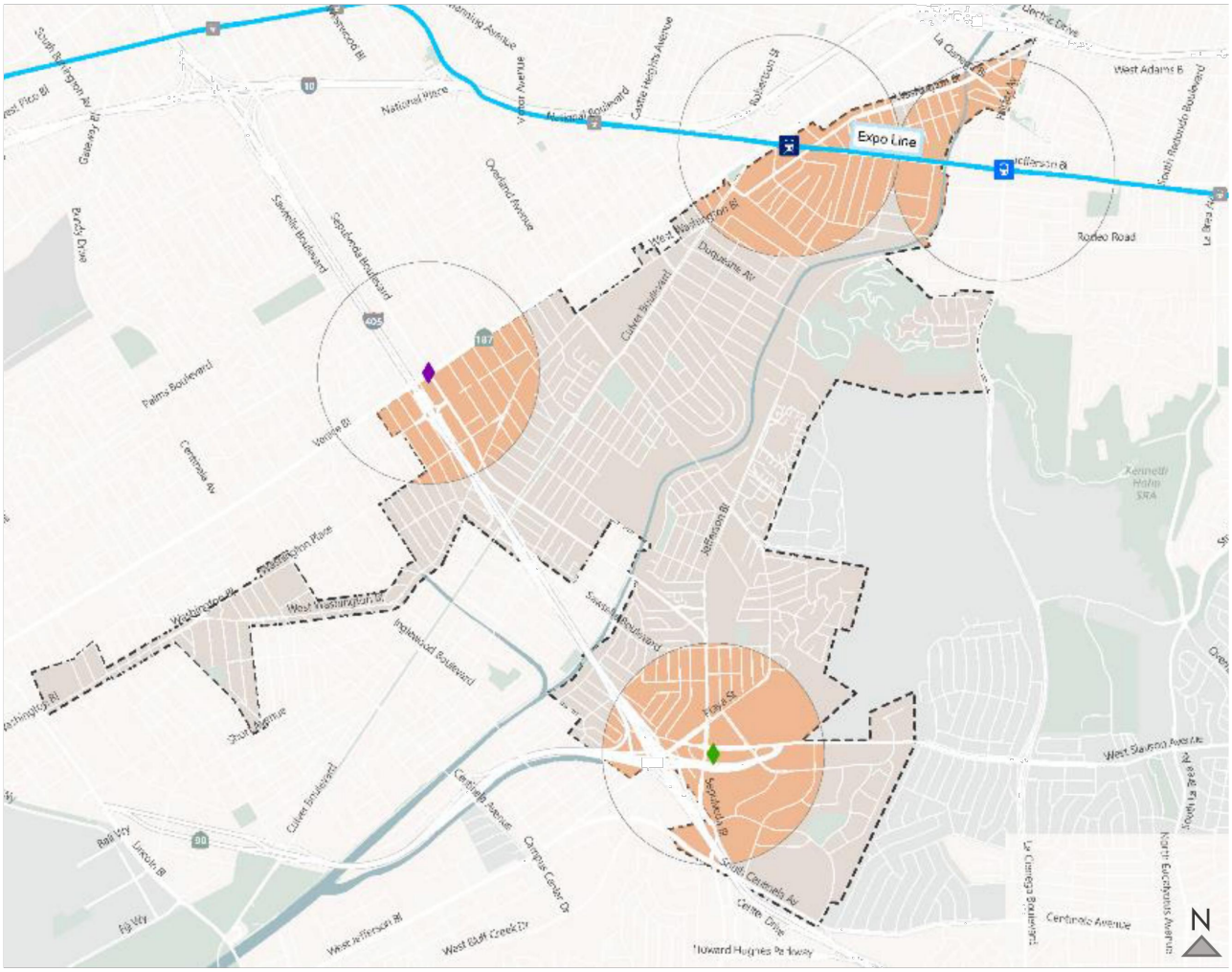

SOURCE: CULVER CITY TRANSPORTATION STUDY CRITERIA AND GUIDELINES (JULY 2020)

FIGURE 14

10/19/2020

FN: JEFFERSON & SLAUSON HOTEL\REPORT GRAPHICS20201019\TRANSIT PRIORITY AREAS

CITY OF CULVER CITY
TRANSIT PRIORITY AREAS

CRAIN & ASSOCIATES
Transportation Planning
Traffic Engineering
300 Corporate Pointe, Suite 470
Culver City, California 90230
PH (310) 473 6508 F (310) 444 9771
www.crainandassociates.com

MITIGATION MEASURES

As indicated in the preceding traffic impact analysis, the Project is not expected to significantly impact any CMP monitoring locations, public transit, or residential street facilities. However, the Project would result in a significant traffic impact at one study intersection, Jefferson Boulevard & I-405 Freeway Northbound Ramps, prior to mitigation. A series of mitigation measures were investigated to address this significant traffic impact, as well as voluntary improvement measures to deal with existing neighborhood traffic intrusion problems and Transportation Demand Management (TDM) plan measures to promote alternative travel mode usage for the Project. These measures are described in detail below.

Transportation Demand Management Plan

To align with the requirements of the CCMC and goals of the City's General Plan Circulation Element, mitigation measures should prioritize, to the extent possible, the reduction of Project vehicle trips. Therefore, as a first step, mitigation in the form of a Transportation Demand Management (TDM) plan was analyzed. The purpose of the TDM plan is to implement and maintain measures to reduce the number of vehicle trips generated by the Project (especially during the peak commute periods). TDM strategies encourage Project-goers to use alternative travel methods (modes other than single-occupancy vehicle), through the provision of information services and various programs and physical amenities. TDM measures are intended to increase the awareness and attractiveness of alternative mode travel options.

As a first step, the Project will comply with the requirements of CCMC Section 7.05.015 as a new development that results in a net increase in gross floor area of 100,000 square feet or more. Per the CCMC, at a minimum the Project shall provide the following:

- A bulletin board, display case, or kiosk will be installed in a prominent area accessible to the greatest number of employees (approximately 80 full-time and 40 part-time) displaying transportation information that includes, but is not limited to, the following:
    1. Current maps, routes, and schedules for public transit routes serving the site;
    2. Telephone numbers for referrals on transportation information including numbers for the regional ridesharing agency, transportation management associations, and local transit operators;
    3. Ridesharing promotional material supplied by commuter-oriented organizations;
    4. Bicycle route and facility information, including regional/local bicycle maps and bicycle safety information; and
    5. A listing of any other facilities and resources that may be available for carpoolers, vanpoolers, bicyclists, transit riders, and pedestrians at the site.
- Not less than 10 percent of the employee parking area shall be located as close as is practical to the employee entrance(s) without displacing ADA-accessible and customer parking needs. These spaces shall be reserved for use by potential carpool or vanpool vehicles. This preferential parking shall be identified on the site plan accompanying the application for a building permit. These spaces shall have signs that designate them for employee carpool and vanpool vehicles. Although employee carpool/vanpool space designation is not accounted for in the Project parking demand analysis (see Appendix E), the implementation of carpool/vanpool service would have the net effect of reducing overall employee parking demands. Therefore, the conclusions of the parking demand analysis would remain the same.
- Preferential parking spaces reserved for employee vanpool shall be accessible to vanpool vehicles. When located within the subterranean parking structure, appropriate

minimum vertical clearances, adequate turning radii, and minimum parking space dimensions shall be provided for vanpool parking areas.

- Bicycle parking will be provided above the City required 20 spaces by providing a total of 58 spaces (10 short-term and 48 long-term). Secure bicycle parking will be offered in a bicycle room for long-term bicycle parking storage.
- The Project will include pedestrian pathways following direct and safe routes from the external pedestrian circulation system, vehicle and bicycle parking areas, and transit facilities.
- The Project will provide a safe and convenient zone in which vanpool and carpool vehicles may deliver or board their passengers (the entry drive aisle closer to the hotel used for passenger drop-offs and pick-ups).

In addition to these TDM measures required by the City, the Project would implement additional measures as part of its TDM plan. The Project is a boutique hotel development, located within one-quarter mile of bus lines that provide connections to the greater, regional bus and rail network for Project employees, visitors, and patrons. The Project site is surrounded by supporting and complementary uses within walking, bicycling, and convenient transit-riding distance, such as additional housing for Project employees and additional commercial uses for Project patrons, visitors, and employees. The Project shall take advantage of these opportunities through a pedestrian/bicycle/transit rider-friendly design and implementation of a TDM plan. It should be noted that the Project would eliminate an existing driveway off Jefferson Boulevard along with associated traffic turning conflicts. This would also provide a more pedestrian-friendly environment along the Project's Jefferson Boulevard frontage.

The Project shall incorporate additional TDM measures into the TDM plan beyond those required by the CCMC. The measures shall include amenity improvements for alternative modes of transportation and a TDM trip reduction program which shall include, but not be limited to, the following:

A. Amenity Improvements for Alternative Modes of Transportation

- A bicycle tool and repair stand, provided on-site, in a well-lit area accessible to Project employees and near on-site bicycle parking. The tool and repair stand will be self-serve, contain a working pump and other basic tools, be available at all hours during which the management office of the Project is open, and not require supervision from building management or staff.

- Free on-site shared bicycles, to be used by Project employees, patrons, and visitors. These bicycles will be provided free of charge (with the submittal of a reasonable deposit) on an hourly or daily basis. Parking for these bicycles will be provided on the Project site, separate from other bicycle parking. A member of the Project management office will maintain a contact list for people interested in forming bike-sharing user groups. Alternatively, a City- or region-wide bike-sharing entity, such as Metro Bike Share, may provide these bicycles, if agreeable terms are met between the Project and a bike-sharing entity and the bikes are available on the Project site or within 500 feet of a Project pedestrian entrance.

- Establish priority parking for carpool, vanpool, and clean-air vehicles.

- Install on-site EV charging stations.

- Install wayfinding signage for all modes of transportation.

- Provide amenities such as shower and changing room for employees who bike or walk to work.

- Establish public-accessible parking for shared mobility devices (e.g., bikeshare and scooter share systems.)

B. TDM Trip Reduction Program

- New employee orientation. Every new employee will be required to participate in an orientation. This orientation will be offered during the hiring process and will be conducted by a member of the Project management staff. This orientation will include:

    - An introduction to the concept and goals of TDM, both in general and how it specifically relates to the Project;

    - The physical and programmatic resources and incentives available to all employees; and

    - The distribution of transportation welcome packages, with Metro pass promotional plans; detailed written information about the TDM strategies, resources, and incentives; and phone numbers and website links for further information.

- Annual continuing employee orientation, offered on an annual basis to all employees of the Project. This training will be in addition to the orientation offered to new employees, as described above. This orientation will be conducted by a member of the Project management staff. This training will serve to:

    - Review all of the resources and services of the TDM plan;

    - Address current strengths and shortcomings of the plan;

- Solicit comments, complaints, and/or recommendations from employees; and
- Discuss potential future changes and updates to the TDM plan.

- An automated website. Assuming a website is provided for the Project, it will have one or more pages dedicated to alternative transportation modes with all the information provided on the Project bulletin board. The information will be updated periodically by a member of the Project management office or another person acting as webmaster.
- Commuter matching services, facilitated by a member of the Project management staff and made available to all employees on an annual basis. These services will include carpool matching and bicycle group-ride matching, both with employees of the Project and with other members of the public (via existing commuter matching services).
- Promotion of flexible/alternative work schedules for Project hotel employees.
- Bike- and walk-to-work promotions.
- Implementation of a transit pass discount program for Project users.
- Set up a monitoring program with average vehicle ridership (AVR) goals to achieve.
- Conduct annual TDM surveys.
- Designate an on-site TDM coordinator who will serve as the coordinator (Program Coordinator) of this Trip Reduction Program. The Program Coordinator shall submit annual reports to the Transportation Department with information of the implemented TDM Program, results of annual TDM surveys, and analysis of program effectiveness and suggested revisions. Transportation Department will review and confer with the TDM coordinator to develop program revisions, as necessary, to attain trip reductions.

- Participate in a future Transportation Management Organization.
- Work with City to establish and implement a marketing plan on the available alternative mobility options (transit service, bikeshare/bike routes, carshare, e-scooter share, etc.) to employees and hotel guests:
    - Provide transit/bike/new mobility information kiosk(s);
    - Promote the sale of transit/bikeshare/new mobility passes; and
    - Provide and update regularly the transit/bikeshare/new mobility information displayed at the kiosk(s), on the Project web page, and to employees.
- Personalized commute assistance offered by the on-site TDM coordinator.
- Create a vanpool program for employees or participate in the region's vanpool programs.
- Provide guaranteed ride home to employees who make use of alternative modes of transportation to commute to work.
- Create a financial incentive program for employees who make use of alternative modes of transportation to commute to work and hotel guests:
    - Create B-TAP+Culver Transit Pass Program with Culver City to provide to all employees.
    - Provide monthly subsidy to employees who participate in the vanpool program.
    - Subsidize the use of bikeshare and e-scooter share service.
    - The property owner shall document the total number of employees, and/or registered guests that requested and were provided with the incentives for

alternative modes of transportation within the last year in its annual TDM report. The property owner shall also submit invoices or receipts, with sensitive billing information redacted, to document the number and dollar amount of transit subsidies purchased within the last year. If no employees or guests have opted to use the available contribution or incentive, then the property owner shall submit documentation demonstrating that the contributions or incentives were offered and declined.

All revisions to the TDM plan must reflect the best practices to promote the use of alternative transportation modes and be acceptable to the City's Planning Division and Public Works/Engineering Transportation Department staff.

Although the implementation of the above-mentioned TDM plan would result in a reduction in Project vehicle trips, no percent decrease in Project vehicle trips has been assumed in order to provide a more conservative mitigation analysis.

City of Los Angeles Traffic Signal System Upgrades

Jefferson Boulevard & I-405 Freeway Northbound Ramps

Potential traffic signal system upgrades at/near the significantly impacted study intersection of Jefferson Boulevard & I-405 Freeway Northbound Ramps were also investigated with LADOT staff, as the implementation of the TDM plan alone would not reduce the Project's significant impact to a less-than-significant level. The LADOT ATSAC Division identified this intersection location as requiring the installation of a low-mounted, closed-circuit television (CCTV) camera to assist with signal operations.

The LADOT places CCTV cameras at vital intersection locations in order to observe traffic operations and respond rapidly to traffic incidents that can interrupt vehicle flow and transit

service. Per discussions with LADOT staff, traffic signal system enhancements such as CCTV camera installation are generally expected to improve the overall capacity of the affected intersection/roadway corridor by one percent. The Project would contribute funding to support the installation of CCTV cameras at the intersection of Jefferson Boulevard & I-405 Freeway Northbound Ramps. This traffic signal system improvement is expected to improve operations at the intersection. This mitigation measure was developed in conjunction with, reviewed, and approved by the LADOT.

Jefferson Boulevard & Slauson Avenue

The Project will be responsible for the following intersection improvements at Jefferson Boulevard & Slauson Avenue:

- Replace the pedestrian push buttons at the intersection corners to meet current standards (2-wire accessible pedestrian signals per LADOT Standard Plan S-73.2, with rapid tick tone and vibrating arrow during the walk phase and a locator tone. The current crosswalk regulatory sign plate is version R10-3e).
- Replace the mast-arm mounted street name signs to meet current standards. The frame and mounting hardware shall be for temple edge-lit razor internally-illuminated LED street name signs. The sign panels shall be displayed on both sides with green background and white lettering.
- Install video detection at the intersection.

Other Design Improvements

The Project shall be responsible for the following design improvements adjacent to the Project site:

- Construct the driveway and sidewalk along the Project's frontages, including the curb ramps at the intersection of Jefferson Boulevard & Slauson Avenue, to comply with ADA requirements.

- Construct the alley's curb returns and driveway apron to comply with ADA requirements. Also, add a crosswalk marking across the alley consistent with the California Manual on Uniform Traffic Control Devices (CA MUTCD), and refresh the STOP control marking on the alley's approach to Slauson Avenue.

- Repave the alley along the Project's frontage.

Analysis of Future (2024) With Project Plus Mitigation Traffic Conditions

Based on the abovementioned TDM plan measures and traffic signal system upgrade, a Future (2024) With Project Plus Mitigation condition was analyzed, and the results are shown in Table 14. As shown in Table 14, the implementation these mitigation improvements would reduce the Project impacts to less-than-significant levels at the significantly impacted intersection of Jefferson Boulevard & I-405 Freeway Northbound Ramps.

Voluntary Neighborhood Traffic Intrusion and Parking Mitigation Measures

At the request of the City and based on concerns from the community, the Project will fund a study to identify potential neighborhood traffic intrusion mitigation measures. These measures may include peak-period turn restrictions at certain intersections to address the cut-through traffic concerns within the Sunkist Park neighborhood. City traffic engineering staff indicated that there is a recognized cut-through traffic problem on southbound Segrell Way and Culver Park Drive, between Sawtelle Boulevard and Slauson Avenue, during the weekday PM peak period. As such, City staff indicated they would be supportive of traffic measures involving weekday PM peak-period left-turn restrictions for the southbound approaches of Segrell Way

and Culver Park Drive at Slauson Avenue (and possibly right-turn restrictions for the eastbound approaches of Sawtelle Boulevard at Segrell Way and Culver Park Drive). The study would follow the Neighborhood Traffic Management Program (NTMP) process, as required for local street traffic intrusion improvements in the Sunkist Park neighborhood.

An additional Project feature may include assisting the Sunkist Park neighborhood with expanding the residential permit parking program to ensure that parking along Segrell Way and Culver Park Drive is available primarily (or exclusively) for residents/guests on those roadways. Within five years of Project occupancy, if the City determines there is an intrusion of Project parking on nearby residential streets, the Project or subsequent property owner shall be responsible to pay for a parking study to be performed by a consultant selected by the City. If the parking study determines that mitigations are needed such as the establishment of permit parking, the Project shall pay for such mitigations including the cost of signage and one year of residential parking permits to alleviate the intrusion of Project parking on those streets.

Similarly, within five years after Project occupancy, if the City observes intrusion of Project traffic on nearby residential streets, the Project or subsequent property owner shall be responsible to conduct a NTMP with input from the community to study and pay for the implementation of any traffic calming measures that will minimize or eliminate Project traffic from using the nearby residential streets. The NTMP review, design, and construction would be carried out by consultants selected by the City.

Table 14

Critical Movement Analysis and Levels of Service Summary
Future (2024) With Project Plus Mitigation Conditions

				Future (2024)						Future (2024) With Mitgation					
			Peak	Without Project		With Project				Without Project		With Project			
No.	Intersection	Jurisdiction(s)	Hour	V/C	LOS	V/C	LOS	Impact	Sig.?	V/C	LOS	V/C	LOS	Impact	Sig.?
1	Jefferson Blvd. &	Culver City/	AM	0.695	B	0.697	B	0.002	No	0.695	B	0.697	B	0.002	No
	Mesmer Ave.[1]	Los Angeles	PM	0.572	A	0.573	A	0.001	No	0.572	A	0.573	A	0.001	No
2	Jefferson Blvd. &	Culver City/	AM	1.062	F	1.064	F	0.002	No	1.062	F	1.064	F	0.002	No
	I-405 Fwy. SB Ramps[1]	Los Angeles	PM	0.779	C	0.783	C	0.004	No	0.779	C	0.783	C	0.004	No
3	Jefferson Blvd. &	Culver City/	AM	1.145	F	1.163	F	0.018	Yes	1.145	F	1.153	F	0.008	No
	I-405 Fwy. NB Ramps[1]	Los Angeles	PM	1.182	F	1.198	F	0.016	Yes	1.182	F	1.188	F	0.006	No
4	Slauson Ave. &	Culver City	AM	0.425	A	0.451	A	0.026	No	0.425	A	0.451	A	0.026	No
	Jefferson Blvd.[2]		PM	0.515	A	0.521	A	0.006	No	0.515	A	0.521	A	0.006	No
5	Slauson Ave. &	Culver City	AM	0.606	B	0.609	B	0.003	No	0.606	B	0.609	B	0.003	No
	Sepulveda Blvd.[2]		PM	0.657	B	0.659	B	0.002	No	0.657	B	0.659	B	0.002	No
6	Slauson Ave. &	Culver City	AM	0.799	C	0.802	D	0.003	No	0.799	C	0.802	D	0.003	No
	Marina Fwy.[2]		PM	0.700	B	0.700	B	0.000	No	0.700	B	0.700	B	0.000	No
7	Centinela Ave. &	Culver City/	AM	0.957	E	0.959	E	0.002	No	0.957	E	0.959	E	0.002	No
	Sepulveda Blvd.[1]	Los Angeles	PM	1.109	F	1.110	F	0.001	No	1.109	F	1.110	F	0.001	No

Notes

[1] Analysis results based on City of Los Angeles CMA methodology and assumptions.

[2] Analysis results based on City of Culver City CMA methodology.

APPENDIX A

TRAFFIC COUNT DATA SHEETS

Counts Unlimited
PO Box 1178
Corona, CA 92878
(951) 268-6268

City of Los Angeles
N/S: Jefferson Boulevard
E/W: Mesmer Avenue
Weather: Clear

File Name : 01_LAC_Jefferson_Mesmer AM
Site Code : 16618886
Start Date : 11/28/2018
Page No : 1

Groups Printed- Passenger Vehicles - Dual Wheeled - Buses

	Jefferson Boulevard Southbound				Mesmer Avenue Westbound				Jefferson Boulevard Northbound				Mesmer Avenue Eastbound				
Start Time	Left	Thru	Right	App. Total	Left	Thru	Right	App. Total	Left	Thru	Right	App. Total	Left	Thru	Right	App. Total	Int. Total
07:00 AM	35	188	19	242	10	14	125	149	4	129	11	144	13	6	1	20	555
07:15 AM	48	210	18	276	17	14	152	183	1	193	5	199	19	8	2	29	687
07:30 AM	65	208	10	283	11	28	109	148	7	222	2	231	23	11	4	38	700
07:45 AM	73	251	23	347	7	20	112	139	7	247	9	263	17	7	11	35	784
Total	221	857	70	1148	45	76	498	619	19	791	27	837	72	32	18	122	2726
08:00 AM	67	222	18	307	6	23	109	138	6	277	7	290	18	11	8	37	772
08:15 AM	89	231	26	346	10	22	115	147	3	249	14	266	23	15	5	43	802
08:30 AM	102	234	28	364	10	25	99	134	8	214	14	236	22	13	7	42	776
08:45 AM	118	287	22	427	7	13	89	109	5	235	14	254	22	10	7	39	829
Total	376	974	94	1444	33	83	412	528	22	975	49	1046	85	49	27	161	3179
09:00 AM	158	307	22	487	18	25	71	114	5	213	11	229	14	12	3	29	859
09:15 AM	123	274	24	421	15	11	62	88	9	204	15	228	21	16	1	38	775
09:30 AM	106	222	21	349	8	13	69	90	1	188	9	198	12	4	4	20	657
09:45 AM	103	263	7	373	18	11	45	74	3	176	14	193	12	3	2	17	657
Total	490	1066	74	1630	59	60	247	366	18	781	49	848	59	35	10	104	2948
Grand Total	1087	2897	238	4222	137	219	1157	1513	59	2547	125	2731	216	116	55	387	8853
Apprch %	25.7	68.6	5.6		9.1	14.5	76.5		2.2	93.3	4.6		55.8	30	14.2		
Total %	12.3	32.7	2.7	47.7	1.5	2.5	13.1	17.1	0.7	28.8	1.4	30.8	2.4	1.3	0.6	4.4	
Passenger Vehicles	1066	2785	230	4081	133	216	1097	1446	56	2438	117	2611	213	114	54	381	8519
% Passenger Vehicles	98.1	96.1	96.6	96.7	97.1	98.6	94.8	95.6	94.9	95.7	93.6	95.6	98.6	98.3	98.2	98.4	96.2
Dual Wheeled	15	86	8	109	3	3	38	44	2	82	8	92	3	2	1	6	251
% Dual Wheeled	1.4	3	3.4	2.6	2.2	1.4	3.3	2.9	3.4	3.2	6.4	3.4	1.4	1.7	1.8	1.6	2.8
Buses	6	26	0	32	1	0	22	23	1	27	0	28	0	0	0	0	83
% Buses	0.6	0.9	0	0.8	0.7	0	1.9	1.5	1.7	1.1	0	1	0	0	0	0	0.9

	Jefferson Boulevard Southbound				Mesmer Avenue Westbound				Jefferson Boulevard Northbound				Mesmer Avenue Eastbound				
Start Time	Left	Thru	Right	App. Total	Left	Thru	Right	App. Total	Left	Thru	Right	App. Total	Left	Thru	Right	App. Total	Int. Total
Peak Hour Analysis From 07:00 AM to 09:45 AM - Peak 1 of 1																	
Peak Hour for Entire Intersection Begins at 08:15 AM																	
08:15 AM	89	231	26	346	10	22	**115**	**147**	3	**249**	**14**	**266**	**23**	**15**	5	**43**	802
08:30 AM	102	234	**28**	364	10	**25**	99	134	**8**	214	14	236	22	13	**7**	42	776
08:45 AM	118	287	22	427	7	13	89	109	5	235	14	254	22	10	7	39	829
09:00 AM	**158**	**307**	22	**487**	**18**	25	71	114	5	213	11	229	14	12	3	29	**859**
Total Volume	467	1059	98	1624	45	85	374	504	21	911	53	985	81	50	22	153	3266
% App. Total	28.8	65.2	6		8.9	16.9	74.2		2.1	92.5	5.4		52.9	32.7	14.4		
PHF	.739	.862	.875	.834	.625	.850	.813	.857	.656	.915	.946	.926	.880	.833	.786	.890	.951

Counts Unlimited
PO Box 1178
Corona, CA 92878
(951) 268-6268

City of Los Angeles
N/S: Jefferson Boulevard
E/W: Mesmer Avenue
Weather: Clear

File Name : 01_LAC_Jefferson_Mesmer AM
Site Code : 16618886
Start Date : 11/28/2018

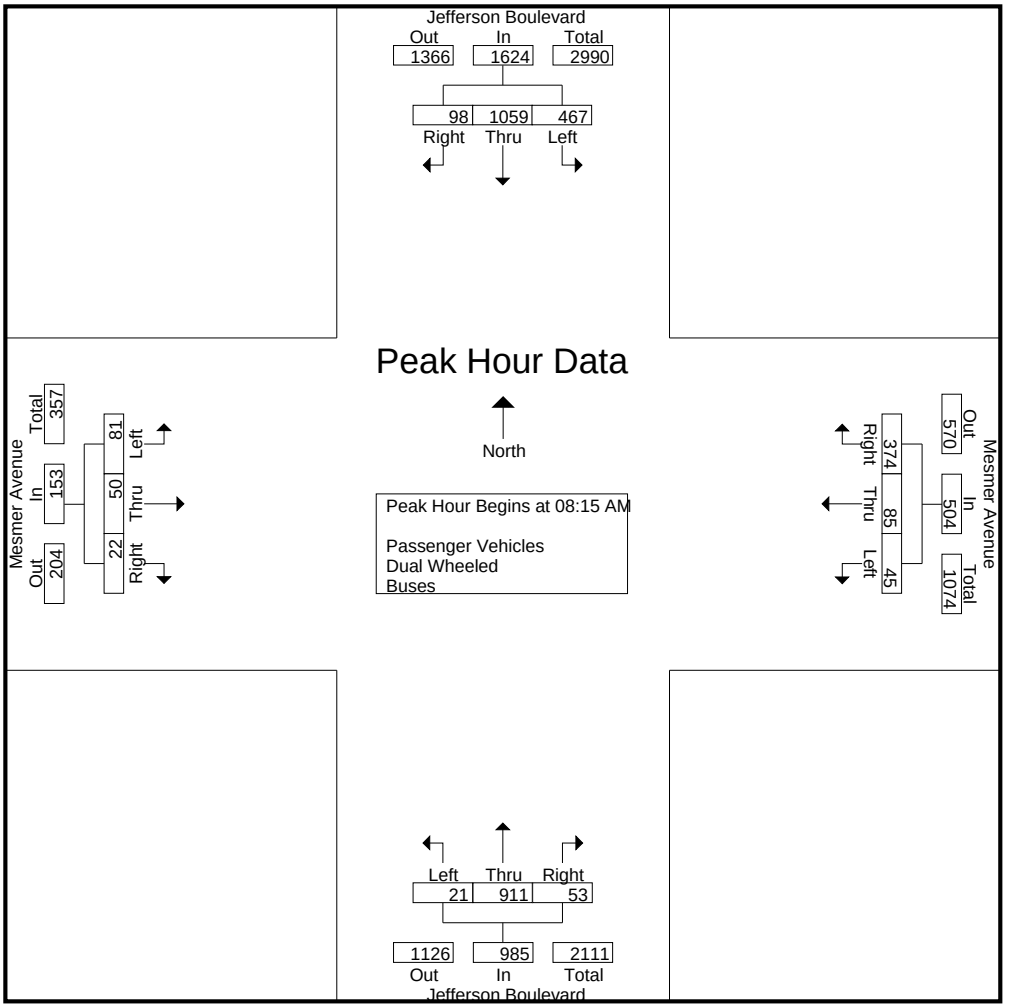

Peak Hour Analysis From 07:00 AM to 09:45 AM - Peak 1 of 1
Peak Hour for Each Approach Begins at:

	08:30 AM				07:00 AM				07:45 AM				08:00 AM			
+0 mins.	102	234	**28**	364	10	14	125	149	7	247	9	263	18	11	**8**	37
+15 mins.	118	287	22	427	**17**	14	**152**	**183**	6	**277**	7	**290**	**23**	**15**	5	**43**
+30 mins.	**158**	**307**	22	**487**	11	**28**	109	148	3	249	**14**	266	22	13	7	42
+45 mins.	123	274	24	421	7	20	112	139	**8**	214	14	236	22	10	7	39
Total Volume	501	1102	96	1699	45	76	498	619	24	987	44	1055	85	49	27	161
% App. Total	29.5	64.9	5.7		7.3	12.3	80.5		2.3	93.6	4.2		52.8	30.4	16.8	
PHF	.793	.897	.857	.872	.662	.679	.819	.846	.750	.891	.786	.909	.924	.817	.844	.936

Counts Unlimited
PO Box 1178
Corona, CA 92878
(951) 268-6268

City of Los Angeles
N/S: Jefferson Boulevard
E/W: Mesmer Avenue
Weather: Clear

File Name : 01_LAC_Jefferson_Mesmer AM
Site Code : 16618886
Start Date : 11/28/2018
Page No : 1

Groups Printed- Passenger Vehicles

	Jefferson Boulevard Southbound				Mesmer Avenue Westbound				Jefferson Boulevard Northbound				Mesmer Avenue Eastbound				
Start Time	Left	Thru	Right	App. Total	Left	Thru	Right	App. Total	Left	Thru	Right	App. Total	Left	Thru	Right	App. Total	Int. Total
07:00 AM	34	176	19	229	10	14	122	146	3	124	11	138	13	6	1	20	533
07:15 AM	48	200	18	266	16	14	147	177	1	188	5	194	19	8	2	29	666
07:30 AM	61	203	10	274	11	28	100	139	7	213	2	222	23	11	4	38	673
07:45 AM	72	246	23	341	7	20	109	136	6	232	8	246	17	7	11	35	758
Total	215	825	70	1110	44	76	478	598	17	757	26	800	72	32	18	122	2630
08:00 AM	63	214	17	294	6	23	106	135	6	274	5	285	18	11	8	37	751
08:15 AM	89	217	24	330	10	22	109	141	3	236	13	252	22	14	5	41	764
08:30 AM	99	224	28	351	10	25	94	129	8	207	13	228	21	12	6	39	747
08:45 AM	118	277	21	416	7	12	81	100	4	223	14	241	22	10	7	39	796
Total	369	932	90	1391	33	82	390	505	21	940	45	1006	83	47	26	156	3058
09:00 AM	154	294	20	468	18	25	64	107	5	203	11	219	14	12	3	29	823
09:15 AM	121	264	24	409	14	10	57	81	9	197	15	221	21	16	1	38	749
09:30 AM	105	213	20	338	8	12	66	86	1	174	7	182	12	4	4	20	626
09:45 AM	102	257	6	365	16	11	42	69	3	167	13	183	11	3	2	16	633
Total	482	1028	70	1580	56	58	229	343	18	741	46	805	58	35	10	103	2831
Grand Total	1066	2785	230	4081	133	216	1097	1446	56	2438	117	2611	213	114	54	381	8519
Apprch %	26.1	68.2	5.6		9.2	14.9	75.9		2.1	93.4	4.5		55.9	29.9	14.2		
Total %	12.5	32.7	2.7	47.9	1.6	2.5	12.9	17	0.7	28.6	1.4	30.6	2.5	1.3	0.6	4.5	

	Jefferson Boulevard Southbound				Mesmer Avenue Westbound				Jefferson Boulevard Northbound				Mesmer Avenue Eastbound				
Start Time	Left	Thru	Right	App. Total	Left	Thru	Right	App. Total	Left	Thru	Right	App. Total	Left	Thru	Right	App. Total	Int. Total
Peak Hour Analysis From 08:15 AM to 09:00 AM - Peak 1 of 1																	
Peak Hour for Entire Intersection Begins at 08:15 AM																	
08:15 AM	89	217	24	330	10	22	**109**	**141**	3	**236**	13	**252**	**22**	**14**	5	**41**	764
08:30 AM	99	224	**28**	351	10	**25**	94	129	**8**	207	13	228	21	12	6	39	747
08:45 AM	118	277	21	416	7	12	81	100	4	223	**14**	241	22	10	**7**	39	796
09:00 AM	**154**	**294**	20	**468**	**18**	25	64	107	5	203	11	219	14	12	3	29	**823**
Total Volume	460	1012	93	1565	45	84	348	477	20	869	51	940	79	48	21	148	3130
% App. Total	29.4	64.7	5.9		9.4	17.6	73		2.1	92.4	5.4		53.4	32.4	14.2		
PHF	.747	.861	.830	.836	.625	.840	.798	.846	.625	.921	.911	.933	.898	.857	.750	.902	.951

Counts Unlimited
PO Box 1178
Corona, CA 92878
(951) 268-6268

City of Los Angeles
N/S: Jefferson Boulevard
E/W: Mesmer Avenue
Weather: Clear

File Name : 01_LAC_Jefferson_Mesmer AM
Site Code : 16618886
Start Date : 11/28/2018

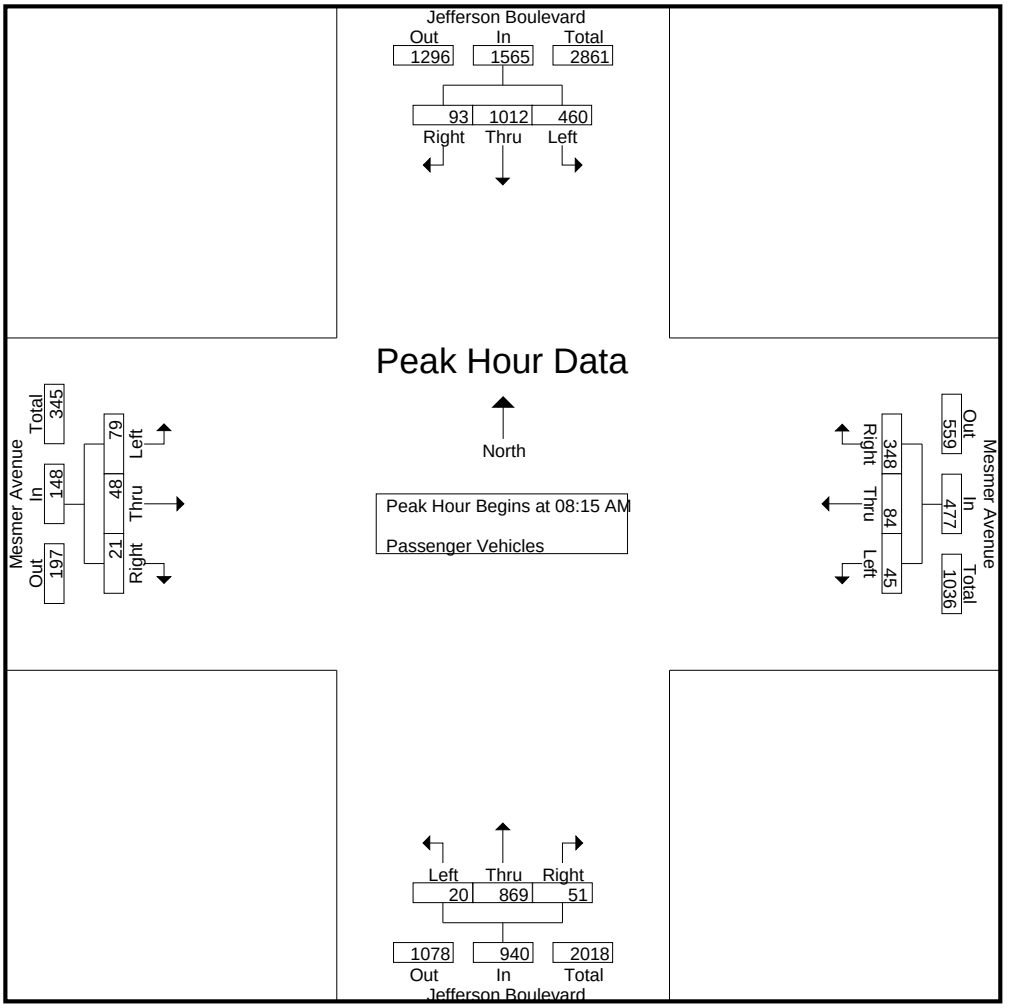

Peak Hour Analysis From 08:15 AM to 09:00 AM - Peak 1 of 1
Peak Hour for Each Approach Begins at:

	08:15 AM				08:15 AM				08:15 AM				08:15 AM			
+0 mins.	89	217	24	330	10	22	**109**	**141**	3	**236**	13	**252**	**22**	**14**	5	**41**
+15 mins.	99	224	**28**	351	10	**25**	94	129	**8**	207	13	228	21	12	6	39
+30 mins.	118	277	21	416	7	12	81	100	4	223	**14**	241	22	10	**7**	39
+45 mins.	**154**	**294**	20	**468**	**18**	25	64	107	5	203	11	219	14	12	3	29
Total Volume	460	1012	93	1565	45	84	348	477	20	869	51	940	79	48	21	148
% App. Total	29.4	64.7	5.9		9.4	17.6	73		2.1	92.4	5.4		53.4	32.4	14.2	
PHF	.747	.861	.830	.836	.625	.840	.798	.846	.625	.921	.911	.933	.898	.857	.750	.902

Counts Unlimited
PO Box 1178
Corona, CA 92878
(951) 268-6268

City of Los Angeles
N/S: Jefferson Boulevard
E/W: Mesmer Avenue
Weather: Clear

File Name : 01_LAC_Jefferson_Mesmer AM
Site Code : 16618886
Start Date : 11/28/2018
Page No : 1

Groups Printed- Dual Wheeled

	Jefferson Boulevard Southbound				Mesmer Avenue Westbound				Jefferson Boulevard Northbound				Mesmer Avenue Eastbound				
Start Time	Left	Thru	Right	App. Total	Left	Thru	Right	App. Total	Left	Thru	Right	App. Total	Left	Thru	Right	App. Total	Int. Total
07:00 AM	1	8	0	9	0	0	1	1	0	3	0	3	0	0	0	0	13
07:15 AM	0	7	0	7	0	0	3	3	0	5	0	5	0	0	0	0	15
07:30 AM	3	5	0	8	0	0	5	5	0	5	0	5	0	0	0	0	18
07:45 AM	1	5	0	6	0	0	3	3	1	11	1	13	0	0	0	0	22
Total	5	25	0	30	0	0	12	12	1	24	1	26	0	0	0	0	68
08:00 AM	4	4	1	9	0	0	2	2	0	3	2	5	0	0	0	0	16
08:15 AM	0	11	2	13	0	0	4	4	0	10	1	11	1	1	0	2	30
08:30 AM	1	8	0	9	0	0	4	4	0	6	1	7	1	1	1	3	23
08:45 AM	0	9	1	10	0	1	5	6	1	10	0	11	0	0	0	0	27
Total	5	32	4	41	0	1	15	16	1	29	4	34	2	2	1	5	96
09:00 AM	3	11	2	16	0	0	5	5	0	7	0	7	0	0	0	0	28
09:15 AM	2	7	0	9	1	1	2	4	0	6	0	6	0	0	0	0	19
09:30 AM	0	6	1	7	0	1	2	3	0	11	2	13	0	0	0	0	23
09:45 AM	0	5	1	6	2	0	2	4	0	5	1	6	1	0	0	1	17
Total	5	29	4	38	3	2	11	16	0	29	3	32	1	0	0	1	87
Grand Total	15	86	8	109	3	3	38	44	2	82	8	92	3	2	1	6	251
Apprch %	13.8	78.9	7.3		6.8	6.8	86.4		2.2	89.1	8.7		50	33.3	16.7		
Total %	6	34.3	3.2	43.4	1.2	1.2	15.1	17.5	0.8	32.7	3.2	36.7	1.2	0.8	0.4	2.4	

	Jefferson Boulevard Southbound				Mesmer Avenue Westbound				Jefferson Boulevard Northbound				Mesmer Avenue Eastbound				
Start Time	Left	Thru	Right	App. Total	Left	Thru	Right	App. Total	Left	Thru	Right	App. Total	Left	Thru	Right	App. Total	Int. Total
Peak Hour Analysis From 08:15 AM to 09:00 AM - Peak 1 of 1																	
Peak Hour for Entire Intersection Begins at 08:15 AM																	
08:15 AM	0	**11**	**2**	13	0	0	4	4	0	**10**	**1**	**11**	**1**	**1**	0	2	**30**
08:30 AM	1	8	0	9	0	0	4	4	0	6	1	7	1	1	**1**	**3**	23
08:45 AM	0	9	1	10	0	**1**	**5**	**6**	**1**	10	0	11	0	0	0	0	27
09:00 AM	**3**	11	2	**16**	0	0	5	5	0	7	0	7	0	0	0	0	28
Total Volume	4	39	5	48	0	1	18	19	1	33	2	36	2	2	1	5	108
% App. Total	8.3	81.2	10.4		0	5.3	94.7		2.8	91.7	5.6		40	40	20		
PHF	.333	.886	.625	.750	.000	.250	.900	.792	.250	.825	.500	.818	.500	.500	.250	.417	.900

Counts Unlimited
PO Box 1178
Corona, CA 92878
(951) 268-6268

City of Los Angeles
N/S: Jefferson Boulevard
E/W: Mesmer Avenue
Weather: Clear

File Name : 01_LAC_Jefferson_Mesmer AM
Site Code : 16618886
Start Date : 11/28/2018
Page No : 2

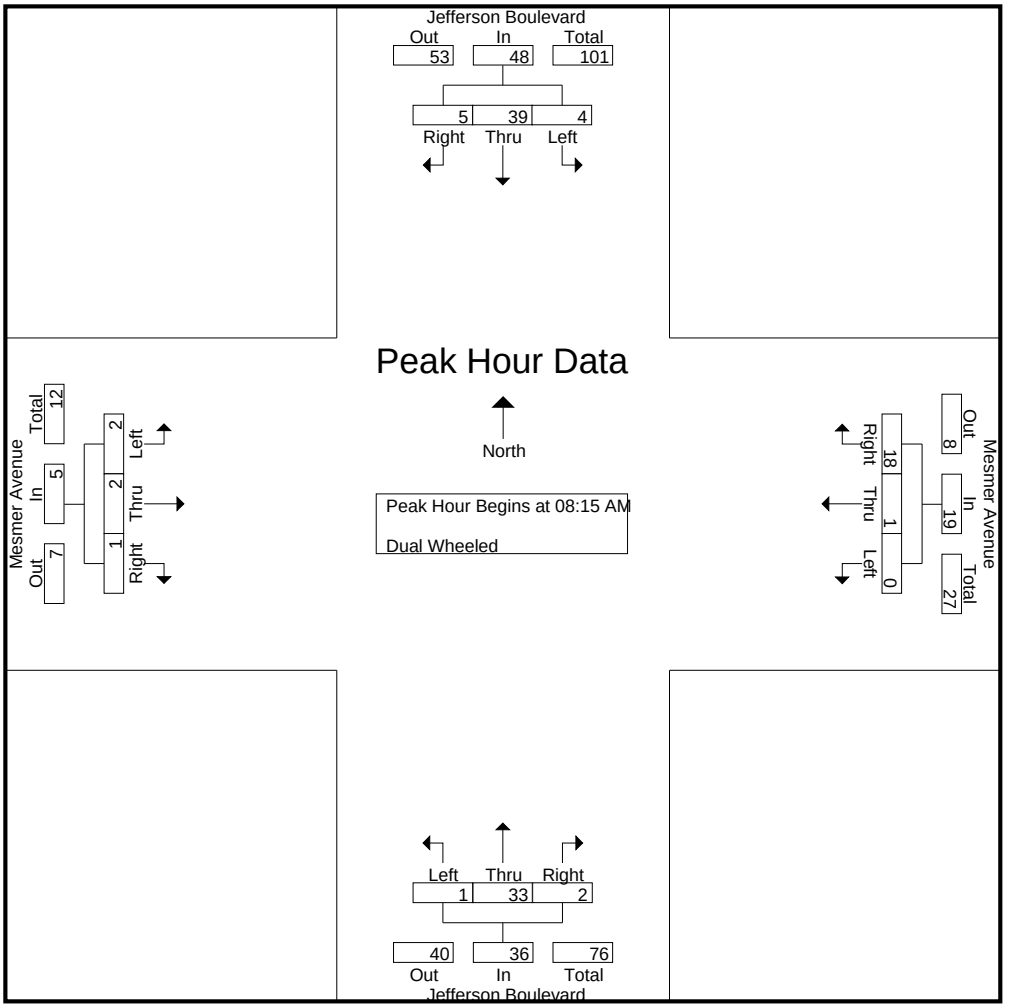

Peak Hour Analysis From 08:15 AM to 09:00 AM - Peak 1 of 1
Peak Hour for Each Approach Begins at:

	08:15 AM				08:15 AM				08:15 AM				08:15 AM			
+0 mins.	0	**11**	**2**	13	0	0	4	4	0	**10**	**1**	**11**	**1**	**1**	0	2
+15 mins.	1	8	0	9	0	0	4	4	0	6	1	7	1	1	**1**	**3**
+30 mins.	0	9	1	10	0	**1**	**5**	**6**	**1**	10	0	11	0	0	0	0
+45 mins.	**3**	11	2	**16**	0	0	5	5	0	7	0	7	0	0	0	0
Total Volume	4	39	5	48	0	1	18	19	1	33	2	36	2	2	1	5
% App. Total	8.3	81.2	10.4		0	5.3	94.7		2.8	91.7	5.6		40	40	20	
PHF	.333	.886	.625	.750	.000	.250	.900	.792	.250	.825	.500	.818	.500	.500	.250	.417

Counts Unlimited
PO Box 1178
Corona, CA 92878
(951) 268-6268

City of Los Angeles
N/S: Jefferson Boulevard
E/W: Mesmer Avenue
Weather: Clear

File Name : 01_LAC_Jefferson_Mesmer AM
Site Code : 16618886
Start Date : 11/28/2018
Page No : 1

Groups Printed- Buses

	Jefferson Boulevard Southbound				Mesmer Avenue Westbound				Jefferson Boulevard Northbound				Mesmer Avenue Eastbound				
Start Time	Left	Thru	Right	App. Total	Left	Thru	Right	App. Total	Left	Thru	Right	App. Total	Left	Thru	Right	App. Total	Int. Total
07:00 AM	0	4	0	4	0	0	2	2	1	2	0	3	0	0	0	0	9
07:15 AM	0	3	0	3	1	0	2	3	0	0	0	0	0	0	0	0	6
07:30 AM	1	0	0	1	0	0	4	4	0	4	0	4	0	0	0	0	9
07:45 AM	0	0	0	0	0	0	0	0	0	4	0	4	0	0	0	0	4
Total	1	7	0	8	1	0	8	9	1	10	0	11	0	0	0	0	28
08:00 AM	0	4	0	4	0	0	1	1	0	0	0	0	0	0	0	0	5
08:15 AM	0	3	0	3	0	0	2	2	0	3	0	3	0	0	0	0	8
08:30 AM	2	2	0	4	0	0	1	1	0	1	0	1	0	0	0	0	6
08:45 AM	0	1	0	1	0	0	3	3	0	2	0	2	0	0	0	0	6
Total	2	10	0	12	0	0	7	7	0	6	0	6	0	0	0	0	25
09:00 AM	1	2	0	3	0	0	2	2	0	3	0	3	0	0	0	0	8
09:15 AM	0	3	0	3	0	0	3	3	0	1	0	1	0	0	0	0	7
09:30 AM	1	3	0	4	0	0	1	1	0	3	0	3	0	0	0	0	8
09:45 AM	1	1	0	2	0	0	1	1	0	4	0	4	0	0	0	0	7
Total	3	9	0	12	0	0	7	7	0	11	0	11	0	0	0	0	30
Grand Total	6	26	0	32	1	0	22	23	1	27	0	28	0	0	0	0	83
Apprch %	18.8	81.2	0		4.3	0	95.7		3.6	96.4	0		0	0	0		
Total %	7.2	31.3	0	38.6	1.2	0	26.5	27.7	1.2	32.5	0	33.7	0	0	0	0	

	Jefferson Boulevard Southbound				Mesmer Avenue Westbound				Jefferson Boulevard Northbound				Mesmer Avenue Eastbound				
Start Time	Left	Thru	Right	App. Total	Left	Thru	Right	App. Total	Left	Thru	Right	App. Total	Left	Thru	Right	App. Total	Int. Total
Peak Hour Analysis From 08:15 AM to 09:00 AM - Peak 1 of 1																	
Peak Hour for Entire Intersection Begins at 08:15 AM																	
08:15 AM	0	**3**	0	3	0	0	2	2	0	**3**	0	**3**	0	0	0	0	**8**
08:30 AM	**2**	2	0	**4**	0	0	1	1	0	1	0	1	0	0	0	0	6
08:45 AM	0	1	0	1	0	0	**3**	**3**	0	2	0	2	0	0	0	0	6
09:00 AM	1	2	0	3	0	0	2	2	0	3	0	3	0	0	0	0	8
Total Volume	3	8	0	11	0	0	8	8	0	9	0	9	0	0	0	0	28
% App. Total	27.3	72.7	0		0	0	100		0	100	0		0	0	0		
PHF	.375	.667	.000	.688	.000	.000	.667	.667	.000	.750	.000	.750	.000	.000	.000	.000	.875

Counts Unlimited
PO Box 1178
Corona, CA 92878
(951) 268-6268

City of Los Angeles
N/S: Jefferson Boulevard
E/W: Mesmer Avenue
Weather: Clear

File Name : 01_LAC_Jefferson_Mesmer AM
Site Code : 16618886
Start Date : 11/28/2018
Page No : 2

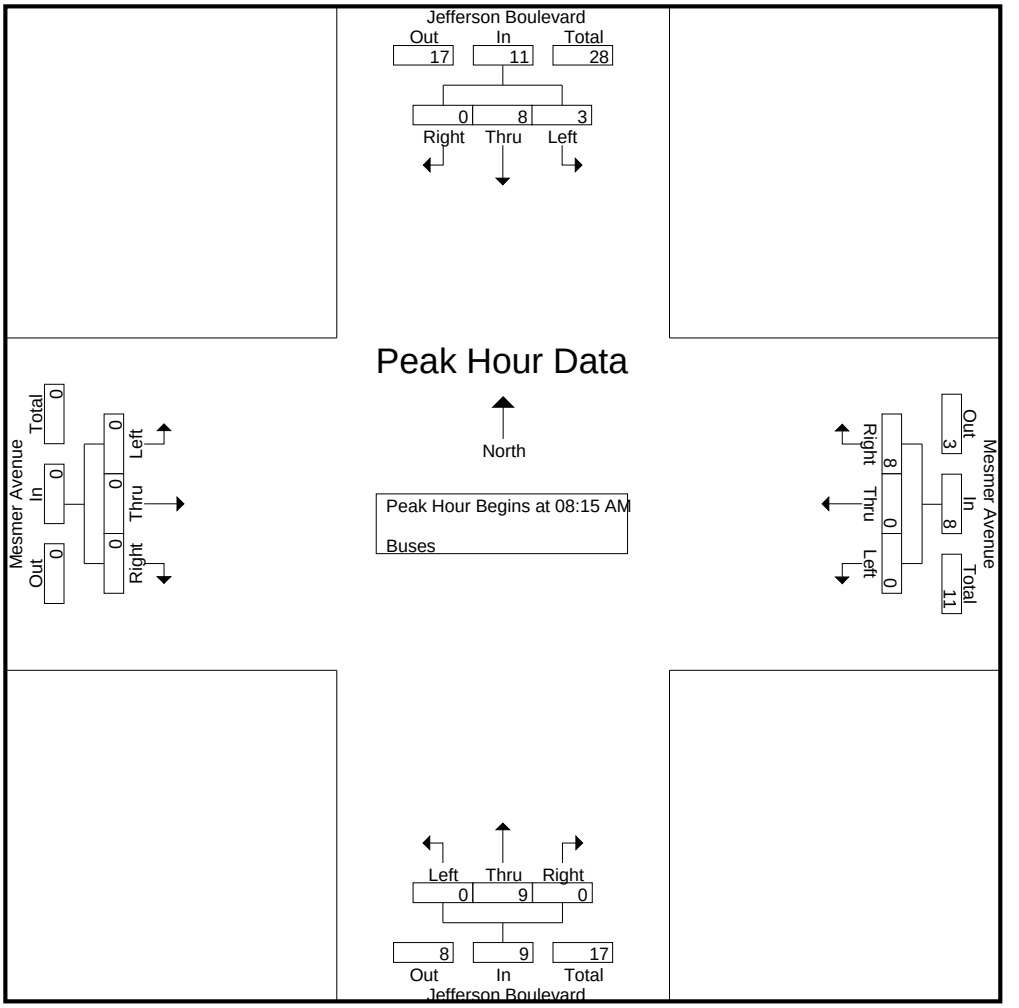

Peak Hour Analysis From 08:15 AM to 09:00 AM - Peak 1 of 1
Peak Hour for Each Approach Begins at:

	08:15 AM				08:15 AM				08:15 AM				08:15 AM			
+0 mins.	0	**3**	0	3	0	0	2	2	0	**3**	0	**3**	0	0	0	0
+15 mins.	**2**	2	0	**4**	0	0	1	1	0	1	0	1	0	0	0	0
+30 mins.	0	1	0	1	0	0	**3**	**3**	0	2	0	2	0	0	0	0
+45 mins.	1	2	0	3	0	0	2	2	0	3	0	3	0	0	0	0
Total Volume	3	8	0	11	0	0	8	8	0	9	0	9	0	0	0	0
% App. Total	27.3	72.7	0		0	0	100		0	100	0		0	0	0	
PHF	.375	.667	.000	.688	.000	.000	.667	.667	.000	.750	.000	.750	.000	.000	.000	.000

Counts Unlimited
PO Box 1178
Corona, CA 92878
(951) 268-6268

City of Los Angeles
N/S: Jefferson Boulevard
E/W: Mesmer Avenue
Weather: Clear

File Name : 01_LAC_Jefferson_Mesmer PM
Site Code : 16618886
Start Date : 11/28/2018
Page No : 1

Groups Printed- Passenger Vehicles - Dual Wheeled - Buses

	Jefferson Boulevard Southbound				Mesmer Avenue Westbound				Jefferson Boulevard Northbound				Mesmer Avenue Eastbound				
Start Time	Left	Thru	Right	App. Total	Left	Thru	Right	App. Total	Left	Thru	Right	App. Total	Left	Thru	Right	App. Total	Int. Total
03:00 PM	49	181	6	236	22	8	81	111	1	279	13	293	4	4	1	9	649
03:15 PM	46	174	8	228	12	10	78	100	1	229	15	245	11	15	2	28	601
03:30 PM	46	176	16	238	10	14	72	96	6	279	13	298	43	27	4	74	706
03:45 PM	55	202	10	267	17	8	71	96	2	281	10	293	42	34	4	80	736
Total	196	733	40	969	61	40	302	403	10	1068	51	1129	100	80	11	191	2692
04:00 PM	56	182	9	247	13	17	84	114	4	293	16	313	39	40	3	82	756
04:15 PM	43	193	18	254	19	16	70	105	3	255	14	272	48	30	5	83	714
04:30 PM	27	205	21	253	18	8	72	98	2	231	14	247	44	19	4	67	665
04:45 PM	36	188	15	239	13	15	82	110	4	244	12	260	41	18	4	63	672
Total	162	768	63	993	63	56	308	427	13	1023	56	1092	172	107	16	295	2807
05:00 PM	40	186	21	247	14	25	87	126	4	251	14	269	62	28	1	91	733
05:15 PM	32	190	16	238	15	20	85	120	8	262	7	277	39	30	6	75	710
05:30 PM	43	192	10	245	15	25	68	108	5	250	10	265	34	44	1	79	697
05:45 PM	36	196	13	245	16	18	51	85	9	195	17	221	25	38	7	70	621
Total	151	764	60	975	60	88	291	439	26	958	48	1032	160	140	15	315	2761
Grand Total	509	2265	163	2937	184	184	901	1269	49	3049	155	3253	432	327	42	801	8260
Apprch %	17.3	77.1	5.5		14.5	14.5	71		1.5	93.7	4.8		53.9	40.8	5.2		
Total %	6.2	27.4	2	35.6	2.2	2.2	10.9	15.4	0.6	36.9	1.9	39.4	5.2	4	0.5	9.7	
Passenger Vehicles	487	2215	160	2862	181	184	868	1233	47	2961	153	3161	426	318	41	785	8041
% Passenger Vehicles	95.7	97.8	98.2	97.4	98.4	100	96.3	97.2	95.9	97.1	98.7	97.2	98.6	97.2	97.6	98	97.3
Dual Wheeled	14	29	3	46	3	0	11	14	2	61	2	65	6	9	1	16	141
% Dual Wheeled	2.8	1.3	1.8	1.6	1.6	0	1.2	1.1	4.1	2	1.3	2	1.4	2.8	2.4	2	1.7
Buses	8	21	0	29	0	0	22	22	0	27	0	27	0	0	0	0	78
% Buses	1.6	0.9	0	1	0	0	2.4	1.7	0	0.9	0	0.8	0	0	0	0	0.9

	Jefferson Boulevard Southbound				Mesmer Avenue Westbound				Jefferson Boulevard Northbound				Mesmer Avenue Eastbound				
Start Time	Left	Thru	Right	App. Total	Left	Thru	Right	App. Total	Left	Thru	Right	App. Total	Left	Thru	Right	App. Total	Int. Total
Peak Hour Analysis From 03:00 PM to 05:45 PM - Peak 1 of 1																	
Peak Hour for Entire Intersection Begins at 03:30 PM																	
03:30 PM	46	176	16	238	10	14	72	96	**6**	279	13	298	43	27	4	74	706
03:45 PM	55	**202**	10	**267**	17	8	71	96	2	281	10	293	42	34	4	80	736
04:00 PM	**56**	182	9	247	13	**17**	**84**	**114**	4	**293**	**16**	**313**	39	**40**	3	82	**756**
04:15 PM	43	193	**18**	254	**19**	16	70	105	3	255	14	272	**48**	30	**5**	**83**	714
Total Volume	200	753	53	1006	59	55	297	411	15	1108	53	1176	172	131	16	319	2912
% App. Total	19.9	74.9	5.3		14.4	13.4	72.3		1.3	94.2	4.5		53.9	41.1	5		
PHF	.893	.932	.736	.942	.776	.809	.884	.901	.625	.945	.828	.939	.896	.819	.800	.961	.963

Counts Unlimited
PO Box 1178
Corona, CA 92878
(951) 268-6268

City of Los Angeles
N/S: Jefferson Boulevard
E/W: Mesmer Avenue
Weather: Clear

File Name : 01_LAC_Jefferson_Mesmer PM
Site Code : 16618886
Start Date : 11/28/2018

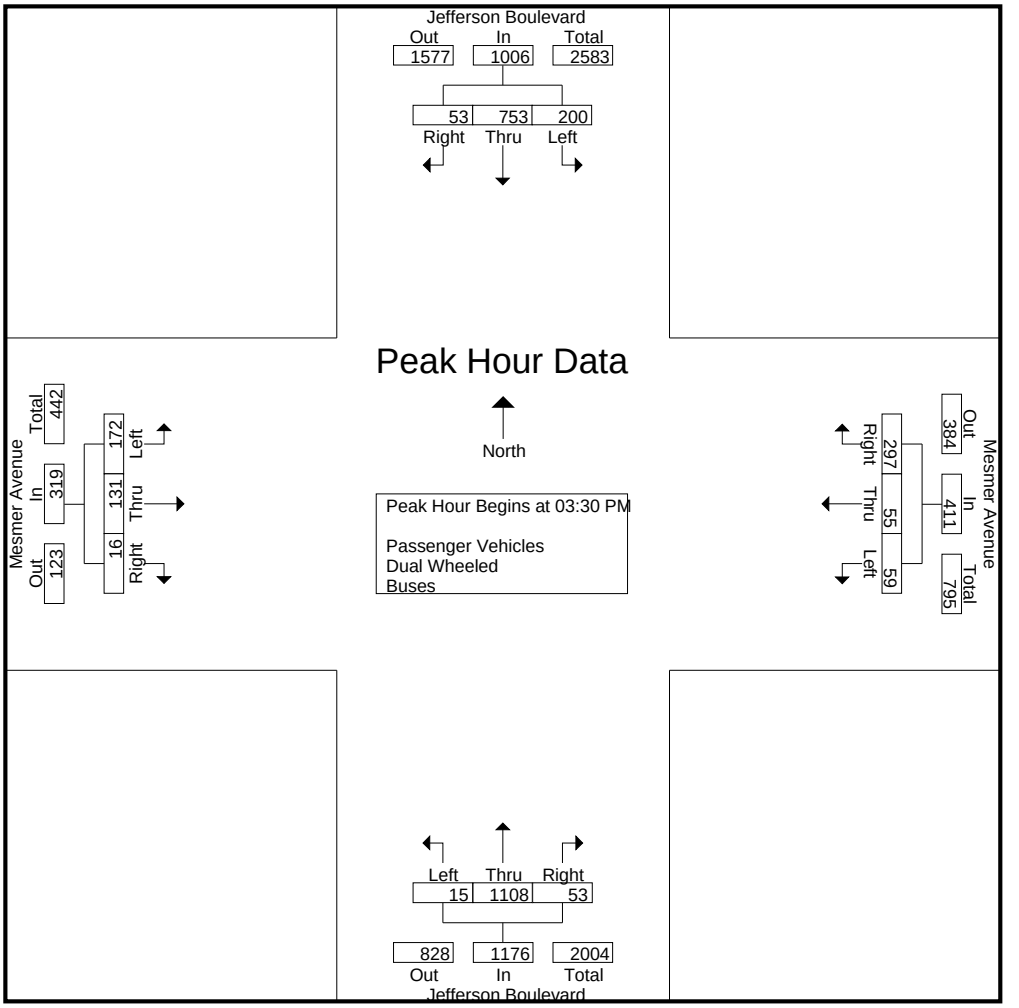

Peak Hour Analysis From 03:00 PM to 05:45 PM - Peak 1 of 1
Peak Hour for Each Approach Begins at:

	03:45 PM				04:45 PM				03:30 PM				03:30 PM			
+0 mins.	55	202	10	**267**	13	15	82	110	**6**	279	13	298	43	27	4	74
+15 mins.	**56**	182	9	247	14	**25**	**87**	**126**	2	281	10	293	42	34	4	80
+30 mins.	43	193	18	254	**15**	20	85	120	4	**293**	**16**	**313**	39	**40**	3	82
+45 mins.	27	**205**	**21**	253	15	25	68	108	3	255	14	272	**48**	30	**5**	**83**
Total Volume	181	782	58	1021	57	85	322	464	15	1108	53	1176	172	131	16	319
% App. Total	17.7	76.6	5.7		12.3	18.3	69.4		1.3	94.2	4.5		53.9	41.1	5	
PHF	.808	.954	.690	.956	.950	.850	.925	.921	.625	.945	.828	.939	.896	.819	.800	.961

Counts Unlimited
PO Box 1178
Corona, CA 92878
(951) 268-6268

City of Los Angeles
N/S: Jefferson Boulevard
E/W: Mesmer Avenue
Weather: Clear

File Name : 01_LAC_Jefferson_Mesmer PM
Site Code : 16618886
Start Date : 11/28/2018
Page No : 1

Groups Printed- Passenger Vehicles

	Jefferson Boulevard Southbound				Mesmer Avenue Westbound				Jefferson Boulevard Northbound				Mesmer Avenue Eastbound				
Start Time	Left	Thru	Right	App. Total	Left	Thru	Right	App. Total	Left	Thru	Right	App. Total	Left	Thru	Right	App. Total	Int. Total
03:00 PM	47	175	6	228	21	8	78	107	0	269	13	282	3	3	0	6	623
03:15 PM	44	168	8	220	12	10	75	97	1	224	15	240	9	13	2	24	581
03:30 PM	41	173	15	229	10	14	71	95	6	266	13	285	43	25	4	72	681
03:45 PM	52	198	10	260	17	8	67	92	1	274	9	284	42	33	4	79	715
Total	184	714	39	937	60	40	291	391	8	1033	50	1091	97	74	10	181	2600
04:00 PM	54	178	7	239	13	17	81	111	4	284	16	304	39	39	3	81	735
04:15 PM	42	186	18	246	18	16	69	103	3	245	14	262	47	29	5	81	692
04:30 PM	25	201	21	247	17	8	67	92	2	225	14	241	44	19	4	67	647
04:45 PM	36	183	15	234	13	15	77	105	4	233	12	249	39	18	4	61	649
Total	157	748	61	966	61	56	294	411	13	987	56	1056	169	105	16	290	2723
05:00 PM	38	182	21	241	14	25	85	124	4	244	14	262	62	28	1	91	718
05:15 PM	31	186	16	233	15	20	81	116	8	258	7	273	39	29	6	74	696
05:30 PM	43	190	10	243	15	25	67	107	5	247	10	262	34	44	1	79	691
05:45 PM	34	195	13	242	16	18	50	84	9	192	16	217	25	38	7	70	613
Total	146	753	60	959	60	88	283	431	26	941	47	1014	160	139	15	314	2718
Grand Total	487	2215	160	2862	181	184	868	1233	47	2961	153	3161	426	318	41	785	8041
Apprch %	17	77.4	5.6		14.7	14.9	70.4		1.5	93.7	4.8		54.3	40.5	5.2		
Total %	6.1	27.5	2	35.6	2.3	2.3	10.8	15.3	0.6	36.8	1.9	39.3	5.3	4	0.5	9.8	

	Jefferson Boulevard Southbound				Mesmer Avenue Westbound				Jefferson Boulevard Northbound				Mesmer Avenue Eastbound				
Start Time	Left	Thru	Right	App. Total	Left	Thru	Right	App. Total	Left	Thru	Right	App. Total	Left	Thru	Right	App. Total	Int. Total
Peak Hour Analysis From 03:30 PM to 04:15 PM - Peak 1 of 1																	
Peak Hour for Entire Intersection Begins at 03:30 PM																	
03:30 PM	41	173	15	229	10	14	71	95	**6**	266	13	285	43	25	4	72	681
03:45 PM	52	**198**	10	**260**	17	8	67	92	1	274	9	284	42	33	4	79	715
04:00 PM	**54**	178	7	239	13	**17**	**81**	**111**	4	**284**	**16**	**304**	39	**39**	3	**81**	**735**
04:15 PM	42	186	**18**	246	**18**	16	69	103	3	245	14	262	**47**	29	**5**	81	692
Total Volume	189	735	50	974	58	55	288	401	14	1069	52	1135	171	126	16	313	2823
% App. Total	19.4	75.5	5.1		14.5	13.7	71.8		1.2	94.2	4.6		54.6	40.3	5.1		
PHF	.875	.928	.694	.937	.806	.809	.889	.903	.583	.941	.813	.933	.910	.808	.800	.966	.960

Counts Unlimited
PO Box 1178
Corona, CA 92878
(951) 268-6268

City of Los Angeles
N/S: Jefferson Boulevard
E/W: Mesmer Avenue
Weather: Clear

File Name : 01_LAC_Jefferson_Mesmer PM
Site Code : 16618886
Start Date : 11/28/2018

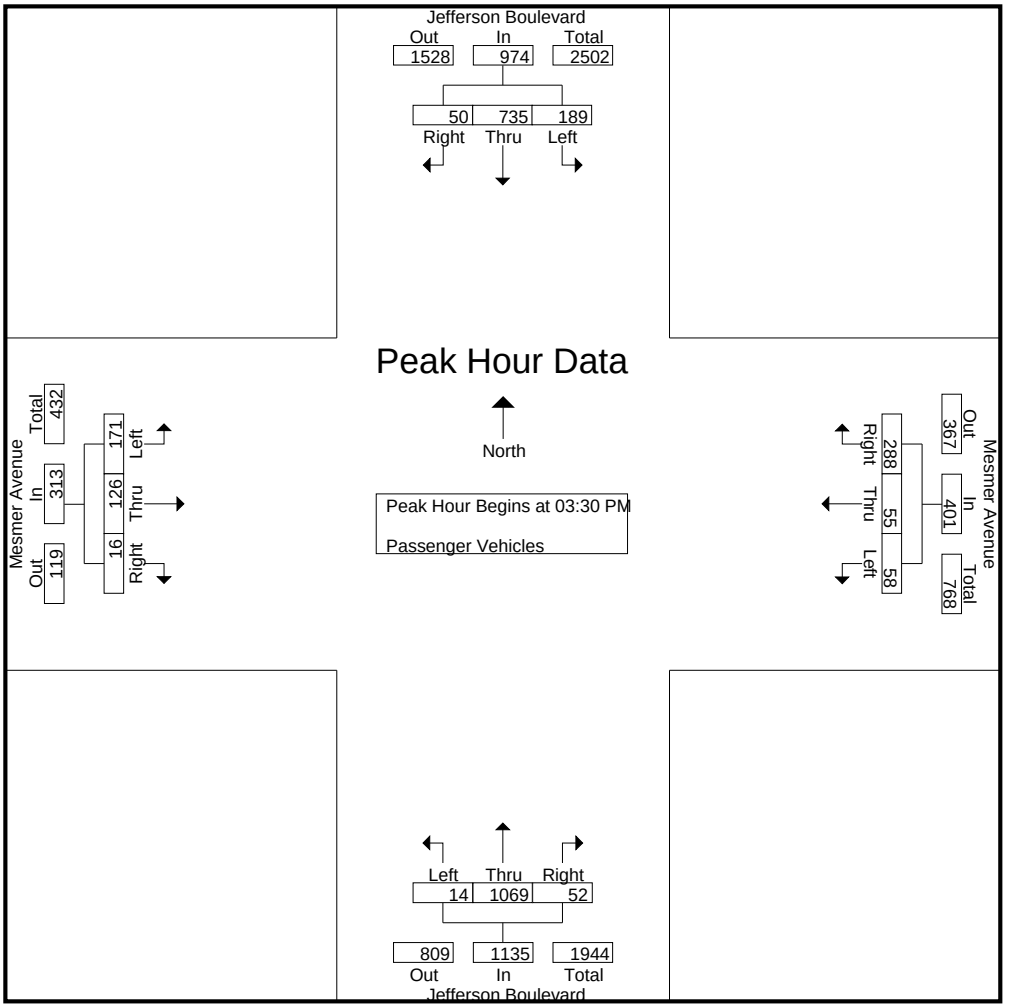

Peak Hour Analysis From 03:30 PM to 04:15 PM - Peak 1 of 1
Peak Hour for Each Approach Begins at:

	03:30 PM				03:30 PM				03:30 PM				03:30 PM			
+0 mins.	41	173	15	229	10	14	71	95	**6**	266	13	285	43	25	4	72
+15 mins.	52	**198**	10	**260**	17	8	67	92	1	274	9	284	42	33	4	79
+30 mins.	**54**	178	7	239	13	**17**	**81**	**111**	4	**284**	**16**	**304**	39	**39**	3	**81**
+45 mins.	42	186	**18**	246	**18**	16	69	103	3	245	14	262	**47**	29	**5**	81
Total Volume	189	735	50	974	58	55	288	401	14	1069	52	1135	171	126	16	313
% App. Total	19.4	75.5	5.1		14.5	13.7	71.8		1.2	94.2	4.6		54.6	40.3	5.1	
PHF	.875	.928	.694	.937	.806	.809	.889	.903	.583	.941	.813	.933	.910	.808	.800	.966

Counts Unlimited
PO Box 1178
Corona, CA 92878
(951) 268-6268

City of Los Angeles
N/S: Jefferson Boulevard
E/W: Mesmer Avenue
Weather: Clear

File Name : 01_LAC_Jefferson_Mesmer PM
Site Code : 16618886
Start Date : 11/28/2018
Page No : 1

Groups Printed- Dual Wheeled

	Jefferson Boulevard Southbound				Mesmer Avenue Westbound				Jefferson Boulevard Northbound				Mesmer Avenue Eastbound				
Start Time	Left	Thru	Right	App. Total	Left	Thru	Right	App. Total	Left	Thru	Right	App. Total	Left	Thru	Right	App. Total	Int. Total
03:00 PM	2	3	0	5	1	0	1	2	1	9	0	10	1	1	1	3	20
03:15 PM	1	4	0	5	0	0	2	2	0	4	0	4	2	2	0	4	15
03:30 PM	4	2	1	7	0	0	0	0	0	9	0	9	0	2	0	2	18
03:45 PM	2	2	0	4	0	0	2	2	1	4	1	6	0	1	0	1	13
Total	9	11	1	21	1	0	5	6	2	26	1	29	3	6	1	10	66
04:00 PM	1	3	2	6	0	0	1	1	0	7	0	7	0	1	0	1	15
04:15 PM	0	3	0	3	1	0	0	1	0	7	0	7	1	1	0	2	13
04:30 PM	1	4	0	5	1	0	2	3	0	3	0	3	0	0	0	0	11
04:45 PM	0	3	0	3	0	0	2	2	0	8	0	8	2	0	0	2	15
Total	2	13	2	17	2	0	5	7	0	25	0	25	3	2	0	5	54
05:00 PM	1	3	0	4	0	0	1	1	0	5	0	5	0	0	0	0	10
05:15 PM	0	2	0	2	0	0	0	0	0	3	0	3	0	1	0	1	6
05:30 PM	0	0	0	0	0	0	0	0	0	1	0	1	0	0	0	0	1
05:45 PM	2	0	0	2	0	0	0	0	0	1	1	2	0	0	0	0	4
Total	3	5	0	8	0	0	1	1	0	10	1	11	0	1	0	1	21
Grand Total	14	29	3	46	3	0	11	14	2	61	2	65	6	9	1	16	141
Apprch %	30.4	63	6.5		21.4	0	78.6		3.1	93.8	3.1		37.5	56.2	6.2		
Total %	9.9	20.6	2.1	32.6	2.1	0	7.8	9.9	1.4	43.3	1.4	46.1	4.3	6.4	0.7	11.3	

	Jefferson Boulevard Southbound				Mesmer Avenue Westbound				Jefferson Boulevard Northbound				Mesmer Avenue Eastbound				
Start Time	Left	Thru	Right	App. Total	Left	Thru	Right	App. Total	Left	Thru	Right	App. Total	Left	Thru	Right	App. Total	Int. Total
Peak Hour Analysis From 03:30 PM to 04:15 PM - Peak 1 of 1																	
Peak Hour for Entire Intersection Begins at 03:30 PM																	
03:30 PM	**4**	2	1	**7**	0	0	0	0	0	**9**	0	**9**	0	**2**	0	**2**	**18**
03:45 PM	2	2	0	4	0	0	**2**	**2**	**1**	4	**1**	6	0	1	0	1	13
04:00 PM	1	**3**	**2**	6	0	0	1	1	0	7	0	7	0	1	0	1	15
04:15 PM	0	3	0	3	**1**	0	0	1	0	7	0	7	**1**	1	0	2	13
Total Volume	7	10	3	20	1	0	3	4	1	27	1	29	1	5	0	6	59
% App. Total	35	50	15		25	0	75		3.4	93.1	3.4		16.7	83.3	0		
PHF	.438	.833	.375	.714	.250	.000	.375	.500	.250	.750	.250	.806	.250	.625	.000	.750	.819

Counts Unlimited
PO Box 1178
Corona, CA 92878
(951) 268-6268

City of Los Angeles
N/S: Jefferson Boulevard
E/W: Mesmer Avenue
Weather: Clear

File Name : 01_LAC_Jefferson_Mesmer PM
Site Code : 16618886
Start Date : 11/28/2018
Page No : 2

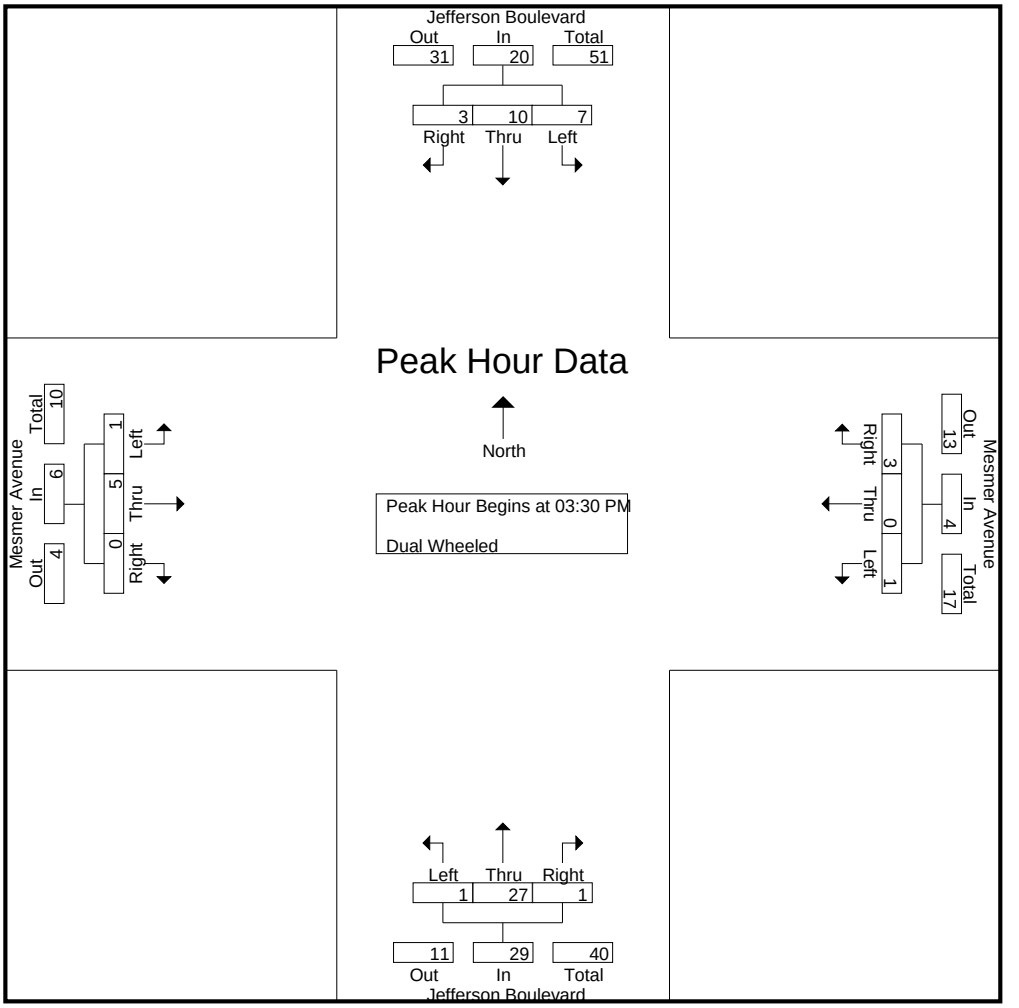

Peak Hour Analysis From 03:30 PM to 04:15 PM - Peak 1 of 1
Peak Hour for Each Approach Begins at:

	03:30 PM				03:30 PM				03:30 PM				03:30 PM			
+0 mins.	**4**	2	1	**7**	0	0	0	0	0	**9**	0	**9**	0	**2**	0	**2**
+15 mins.	2	2	0	4	0	0	**2**	**2**	**1**	4	**1**	6	0	1	0	1
+30 mins.	1	**3**	**2**	6	0	0	1	1	0	7	0	7	0	1	0	1
+45 mins.	0	3	0	3	**1**	0	0	1	0	7	0	7	**1**	1	0	2
Total Volume	7	10	3	20	1	0	3	4	1	27	1	29	1	5	0	6
% App. Total	35	50	15		25	0	75		3.4	93.1	3.4		16.7	83.3	0	
PHF	.438	.833	.375	.714	.250	.000	.375	.500	.250	.750	.250	.806	.250	.625	.000	.750

Counts Unlimited
PO Box 1178
Corona, CA 92878
(951) 268-6268

City of Los Angeles
N/S: Jefferson Boulevard
E/W: Mesmer Avenue
Weather: Clear

File Name : 01_LAC_Jefferson_Mesmer PM
Site Code : 16618886
Start Date : 11/28/2018
Page No : 1

Groups Printed- Buses

	Jefferson Boulevard Southbound				Mesmer Avenue Westbound				Jefferson Boulevard Northbound				Mesmer Avenue Eastbound				
Start Time	Left	Thru	Right	App. Total	Left	Thru	Right	App. Total	Left	Thru	Right	App. Total	Left	Thru	Right	App. Total	Int. Total
03:00 PM	0	3	0	3	0	0	2	2	0	1	0	1	0	0	0	0	6
03:15 PM	1	2	0	3	0	0	1	1	0	1	0	1	0	0	0	0	5
03:30 PM	1	1	0	2	0	0	1	1	0	4	0	4	0	0	0	0	7
03:45 PM	1	2	0	3	0	0	2	2	0	3	0	3	0	0	0	0	8
Total	3	8	0	11	0	0	6	6	0	9	0	9	0	0	0	0	26
04:00 PM	1	1	0	2	0	0	2	2	0	2	0	2	0	0	0	0	6
04:15 PM	1	4	0	5	0	0	1	1	0	3	0	3	0	0	0	0	9
04:30 PM	1	0	0	1	0	0	3	3	0	3	0	3	0	0	0	0	7
04:45 PM	0	2	0	2	0	0	3	3	0	3	0	3	0	0	0	0	8
Total	3	7	0	10	0	0	9	9	0	11	0	11	0	0	0	0	30
05:00 PM	1	1	0	2	0	0	1	1	0	2	0	2	0	0	0	0	5
05:15 PM	1	2	0	3	0	0	4	4	0	1	0	1	0	0	0	0	8
05:30 PM	0	2	0	2	0	0	1	1	0	2	0	2	0	0	0	0	5
05:45 PM	0	1	0	1	0	0	1	1	0	2	0	2	0	0	0	0	4
Total	2	6	0	8	0	0	7	7	0	7	0	7	0	0	0	0	22
Grand Total	8	21	0	29	0	0	22	22	0	27	0	27	0	0	0	0	78
Apprch %	27.6	72.4	0		0	0	100		0	100	0		0	0	0		
Total %	10.3	26.9	0	37.2	0	0	28.2	28.2	0	34.6	0	34.6	0	0	0	0	

	Jefferson Boulevard Southbound				Mesmer Avenue Westbound				Jefferson Boulevard Northbound				Mesmer Avenue Eastbound				
Start Time	Left	Thru	Right	App. Total	Left	Thru	Right	App. Total	Left	Thru	Right	App. Total	Left	Thru	Right	App. Total	Int. Total
Peak Hour Analysis From 03:30 PM to 04:15 PM - Peak 1 of 1																	
Peak Hour for Entire Intersection Begins at 03:30 PM																	
03:30 PM	**1**	1	0	2	0	0	1	1	0	**4**	0	**4**	0	0	0	0	7
03:45 PM	1	2	0	3	0	0	**2**	**2**	0	3	0	3	0	0	0	0	8
04:00 PM	1	1	0	2	0	0	2	2	0	2	0	2	0	0	0	0	6
04:15 PM	1	**4**	0	**5**	0	0	1	1	0	3	0	3	0	0	0	0	**9**
Total Volume	4	8	0	12	0	0	6	6	0	12	0	12	0	0	0	0	30
% App. Total	33.3	66.7	0		0	0	100		0	100	0		0	0	0		
PHF	1.00	.500	.000	.600	.000	.000	.750	.750	.000	.750	.000	.750	.000	.000	.000	.000	.833

Counts Unlimited
PO Box 1178
Corona, CA 92878
(951) 268-6268

City of Los Angeles
N/S: Jefferson Boulevard
E/W: Mesmer Avenue
Weather: Clear

File Name : 01_LAC_Jefferson_Mesmer PM
Site Code : 16618886
Start Date : 11/28/2018
Page No : 2

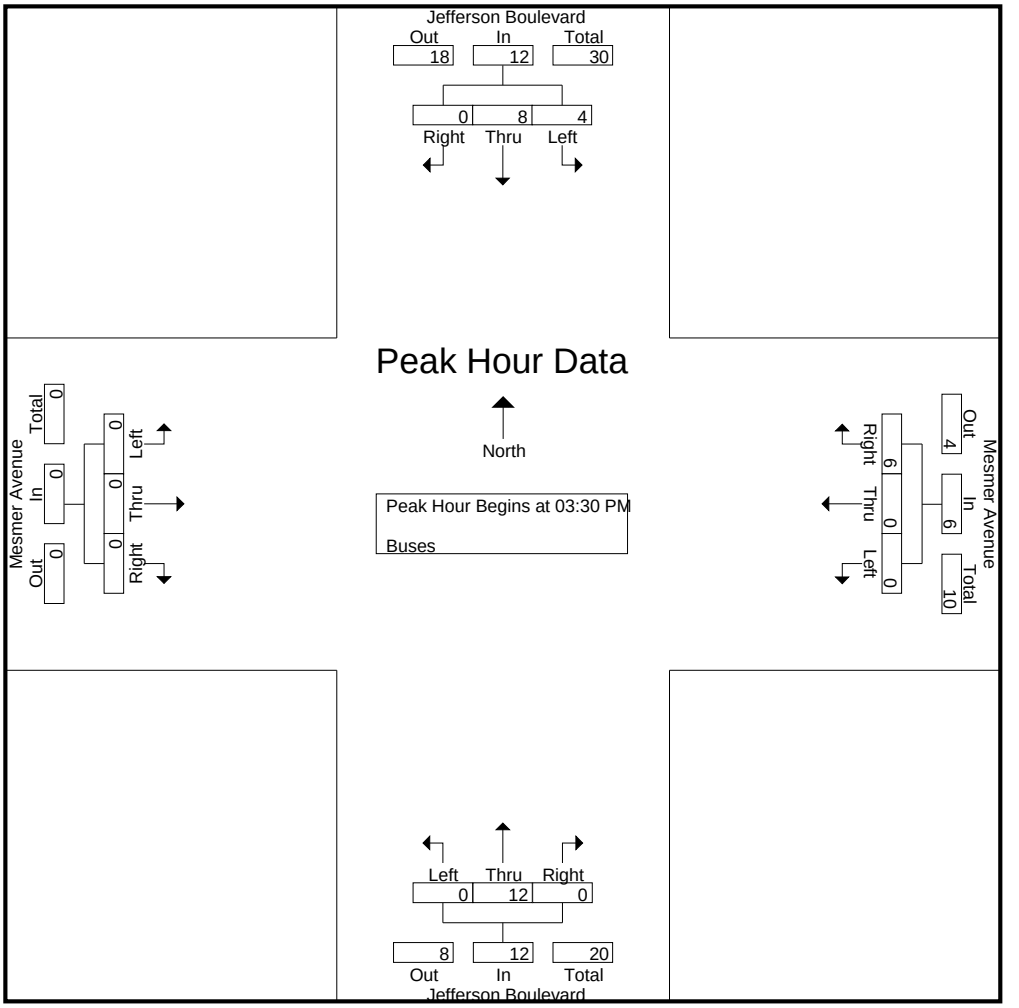

Peak Hour Analysis From 03:30 PM to 04:15 PM - Peak 1 of 1
Peak Hour for Each Approach Begins at:

	03:30 PM				03:30 PM				03:30 PM				03:30 PM			
+0 mins.	**1**	1	0	2	0	0	1	1	0	**4**	0	**4**	0	0	0	0
+15 mins.	1	2	0	3	0	0	**2**	**2**	0	3	0	3	0	0	0	0
+30 mins.	1	1	0	2	0	0	2	2	0	2	0	2	0	0	0	0
+45 mins.	1	**4**	0	**5**	0	0	1	1	0	3	0	3	0	0	0	0
Total Volume	4	8	0	12	0	0	6	6	0	12	0	12	0	0	0	0
% App. Total	33.3	66.7	0		0	0	100		0	100	0		0	0	0	
PHF	1.000	.500	.000	.600	.000	.000	.750	.750	.000	.750	.000	.750	.000	.000	.000	.000

City Of Los Angeles
Department Of Transportation
MANUAL TRAFFIC COUNT SUMMARY

STREET:

North/South Jefferson Boulevard

East/West Mesmer Avenue

Day: Wednesday **Date:** November 25, 2018 **Weather:** CLEAR

Hours: 7-10AM 3-6PM **Staff:** CUI

School Day: YES **District:** Western Los Angele I/S CODE 10947

	N/B	S/B	E/B	W/B
DUAL-WHEELED	157	155	22	58
BIKES	17	24	5	5
BUSES	55	61	0	45

	N/B	TIME	S/B	TIME	E/B	TIME	W/B	TIME
AM PK 15 MIN	290	8.00	487	9.00	43	8.15	183	7.15
PM PK 15 MIN	313	4.00	267	3.45	91	5.00	126	5.00
AM PK HOUR	1055	7.45	1699	8.30	161	8.00	619	7.00
PM PK HOUR	1176	3.30	1021	3.45	319	3.30	464	4.45

NORTHBOUND Approach

Hours	Lt	Th	Rt	Total
7-8	19	791	27	837
8-9	22	975	49	1046
9-10	18	781	49	848
3-4	10	1068	51	1129
4-5	13	1023	56	1092
5-6	26	958	48	1032
TOTAL	108	5596	280	5984

SOUTHBOUND Approach

Hours	Lt	Th	Rt	Total
7-8	221	857	70	1148
8-9	376	974	94	1444
9-10	490	1066	74	1630
3-4	196	733	40	969
4-5	162	768	63	993
5-6	151	764	60	975
TOTAL	1596	5162	401	7159

TOTAL	**XING S/L**		**XING N/L**	
N-S	Ped	Sch	Ped	Sch
1985	12	0	8	0
2490	11	0	6	0
2478	14	0	9	0
2098	9	0	4	0
2085	11	0	9	0
2007	8	0	8	0
13143	65	0	44	0

EASTBOUND Approach

Hours	Lt	Th	Rt	Total
7-8	72	32	18	122
8-9	85	49	27	161
9-10	59	35	10	104
3-4	100	80	11	191
4-5	172	107	16	295
5-6	160	140	15	315
TOTAL	648	443	97	1188

WESTBOUND Approach

Hours	Lt	Th	Rt	Total
7-8	45	76	498	619
8-9	33	83	412	528
9-10	59	60	247	366
3-4	61	40	302	403
4-5	63	56	308	427
5-6	60	88	291	439
TOTAL	321	403	2058	2782

TOTAL	**XING W/L**		**XING E/L**	
E-W	Ped	Sch	Ped	Sch
741	3	0	3	0
689	1	0	8	0
470	2	0	1	0
594	0	0	8	0
722	4	0	8	0
754	2	0	11	1
3970	12	0	39	1

(Rev Oct 06)

City of Los Angeles
Department of Transportation

BICYCLE COUNT SUMMARY

STREET:

North/South:	Jefferson Boulevard				
East/West:	Mesmer Avenue				
Day:	Wednesday	Date:	11/25/2018	Weather:	CLEAR
School Day:	Yes	District:	Western Los Ang	I/S Code:	10947
Hours:	7-10 AM, 3-6 PM	Staff:	CUI		

NORTHBOUND Approach

Hours	Lt	Th	Rt	Total
7-8	1	2	0	3
8-9	0	0	0	0
9-10	0	1	0	1
3-4	0	3	0	3
4-5	0	6	0	6
5-6	0	4	0	4
TOTAL	1	16	0	17

SOUTHBOUND Approach

Hours	Lt	Th	Rt	Total
7-8	1	4	0	5
8-9	2	8	0	10
9-10	0	2	1	3
3-4	0	1	1	2
4-5	0	2	0	2
5-6	0	2	0	2
TOTAL	3	19	2	24

TOTAL

Hours	N-S
7-8	8
8-9	10
9-10	4
3-4	5
4-5	8
5-6	6
TOTAL	41

EASTBOUND Approach

Hours	Lt	Th	Rt	Total
7-8	0	0	0	0
8-9	0	0	0	0
9-10	1	0	0	1
3-4	0	1	0	1
4-5	0	1	0	1
5-6	1	1	0	2
TOTAL	2	3	0	5

WESTBOUND Approach

Hours	Lt	Th	Rt	Total
7-8	0	0	0	0
8-9	0	0	0	0
9-10	0	1	0	1
3-4	0	2	0	2
4-5	0	0	1	1
5-6	0	1	0	1
TOTAL	0	4	1	5

TOTAL

Hours	E-W
7-8	0
8-9	0
9-10	2
3-4	3
4-5	2
5-6	3
TOTAL	10

REMARKS (6 hour total):

	NB	SB	EB	WB	TOTAL
- Female Riders	2	7	0	1	10
- No helmet riders	10	11	5	4	30
- Sidewalk Riding	12	20	5	5	42
- Wrong way riding	2	5	3	1	11

NB: Northbound, **SB**: Southbound, **EB**: Eastbound, **WB**: Westbound, **I/S**: Intersection

Source: CUI

LADOT 2015 CMP

City of Los Angeles
Department of Transportation

PEDESTRIAN COUNT SUMMARY

STREET:					
North/South:	Jefferson Boulevard				
East/West:	Mesmer Avenue				
Day:	Wednesday	Date:	################	Weather:	CLEAR
School Day:	YES	District:	Western Los Angele	I/S Code:	10947
Hours:	7-10 AM, 3-6 PM	Staff:	CUI		

AM PEAK PERIOD

15 Min. Interval	N-LEG	S-LEG	E-LEG	W-LEG	TOTAL
7:00-7:15	1	5	0	0	6
7:15-7:30	3	2	2	1	8
7:30-7:45	3	3	1	2	9
7:45-8:00	1	2	0	0	3
8:00-8:15	0	1	0	0	1
8:15-8:30	1	4	2	0	7
8:30-8:45	5	1	2	1	9
8:45-9:00	0	5	4	0	9
9:00-9:15	2	4	0	0	6
9:15-9:30	3	6	0	0	9
9:30-9:45	4	1	0	1	6
9:45-10:00	0	3	1	1	5
Hours					
7 - 8	8	12	3	3	26
8 - 9	6	11	8	1	26
9 - 10	9	14	1	2	26
TOTAL	23	37	12	6	78

PM PEAK PERIOD

15 Min. Interval	N-LEG	S-LEG	E-LEG	W-LEG	TOTAL
3:00-3:15	1	8	2	0	11
3:15-3:30	2	6	6	0	14
3:30-3:45	1	0	2	0	3
3:45-4:00	0	4	6	0	10
4:00-4:15	2	12	2	2	18
4:15-4:30	1	2	6	2	11
4:30-4:45	0	6	8	0	14
4:45-5:00	6	2	0	4	12
5:00-5:15	6	6	12	0	24
5:15-5:30	0	10	8	2	20
5:30-5:45	1	0	2	2	5
5:45-6:00	1	0	0	0	1
Hours					
3 - 4	4	18	16	0	38
4 - 5	9	22	16	8	55
5 - 6	8	16	22	4	50
	21	56	54	12	143

REMARKS (6 hour total):

	N-LEG	S-LEG	E-LEG	W-LEG	TOTAL
- Wheelchair/special needs assistance	0	0	0	0	0
- Skateboard/scooter	0	2	0	1	3

N: North, **S**: South, **E**: East, **W**: West, **I/S**: Intersection

Source: LADOT 2015 CMP

Counts Unlimited
PO Box 1178
Corona, CA 92878
(951) 268-6268

City of Los Angeles
N/S: Jefferson Boulevard
E/W: I-405 Southbound Ramps
Weather: Clear

File Name : 02_LAC_Jefferson_405S AM
Site Code : 16618886
Start Date : 11/28/2018
Page No : 1

Groups Printed- Passenger Vehicles - Dual Wheeled - Buses

	Jefferson Boulevard Southbound				I-405 Southbound On Ramp Westbound				Jefferson Boulevard Northbound				I-405 Southbound Off Ramp Eastbound				
Start Time	Left	Thru	Right	App. Total	Left	Thru	Right	App. Total	Left	Thru	Right	App. Total	Left	Thru	Right	App. Total	Int. Total
07:00 AM	49	145	0	194	0	0	0	0	0	211	56	267	17	0	103	120	581
07:15 AM	76	145	0	221	0	0	0	0	0	280	80	360	16	0	141	157	738
07:30 AM	92	143	0	235	0	0	0	0	0	240	94	334	25	0	155	180	749
07:45 AM	67	194	0	261	0	0	0	0	0	298	97	395	18	1	167	186	842
Total	284	627	0	911	0	0	0	0	0	1029	327	1356	76	1	566	643	2910
08:00 AM	87	171	0	258	0	0	0	0	0	323	96	419	16	0	151	167	844
08:15 AM	93	178	0	271	0	0	0	0	0	300	92	392	20	0	194	214	877
08:30 AM	102	188	0	290	0	0	0	0	0	258	86	344	22	2	203	227	861
08:45 AM	84	206	0	290	0	0	0	0	0	249	90	339	19	0	261	280	909
Total	366	743	0	1109	0	0	0	0	0	1130	364	1494	77	2	809	888	3491
09:00 AM	86	232	0	318	0	0	0	0	0	219	66	285	29	1	286	316	919
09:15 AM	62	194	0	256	0	0	0	0	0	241	84	325	26	0	233	259	840
09:30 AM	74	184	0	258	0	0	0	0	0	198	64	262	20	1	198	219	739
09:45 AM	56	191	0	247	0	0	0	0	0	200	59	259	39	0	197	236	742
Total	278	801	0	1079	0	0	0	0	0	858	273	1131	114	2	914	1030	3240
Grand Total	928	2171	0	3099	0	0	0	0	0	3017	964	3981	267	5	2289	2561	9641
Apprch %	29.9	70.1	0		0	0	0		0	75.8	24.2		10.4	0.2	89.4		
Total %	9.6	22.5	0	32.1	0	0	0	0	0	31.3	10	41.3	2.8	0.1	23.7	26.6	
Passenger Vehicles	900	2094	0	2994	0	0	0	0	0	2908	932	3840	260	5	2244	2509	9343
% Passenger Vehicles	97	96.5	0	96.6	0	0	0	0	0	96.4	96.7	96.5	97.4	100	98	98	96.9
Dual Wheeled	24	48	0	72	0	0	0	0	0	64	29	93	5	0	43	48	213
% Dual Wheeled	2.6	2.2	0	2.3	0	0	0	0	0	2.1	3	2.3	1.9	0	1.9	1.9	2.2
Buses	4	29	0	33	0	0	0	0	0	45	3	48	2	0	2	4	85
% Buses	0.4	1.3	0	1.1	0	0	0	0	0	1.5	0.3	1.2	0.7	0	0.1	0.2	0.9

	Jefferson Boulevard Southbound				I-405 Southbound On Ramp Westbound				Jefferson Boulevard Northbound				I-405 Southbound Off Ramp Eastbound				
Start Time	Left	Thru	Right	App. Total	Left	Thru	Right	App. Total	Left	Thru	Right	App. Total	Left	Thru	Right	App. Total	Int. Total
Peak Hour Analysis From 07:00 AM to 09:45 AM - Peak 1 of 1																	
Peak Hour for Entire Intersection Begins at 08:15 AM																	
08:15 AM	93	178	0	271	0	0	0	0	0	**300**	**92**	**392**	20	0	194	214	877
08:30 AM	**102**	188	0	290	0	0	0	0	0	258	86	344	22	**2**	203	227	861
08:45 AM	84	206	0	290	0	0	0	0	0	249	90	339	19	0	261	280	909
09:00 AM	86	**232**	0	**318**	0	0	0	0	0	219	66	285	**29**	1	**286**	**316**	**919**
Total Volume	365	804	0	1169	0	0	0	0	0	1026	334	1360	90	3	944	1037	3566
% App. Total	31.2	68.8	0		0	0	0		0	75.4	24.6		8.7	0.3	91		
PHF	.895	.866	.000	.919	.000	.000	.000	.000	.000	.855	.908	.867	.776	.375	.825	.820	.970

Counts Unlimited
PO Box 1178
Corona, CA 92878
(951) 268-6268

City of Los Angeles
N/S: Jefferson Boulevard
E/W: I-405 Southbound Ramps
Weather: Clear

File Name : 02_LAC_Jefferson_405S AM
Site Code : 16618886
Start Date : 11/28/2018
Page No : 2

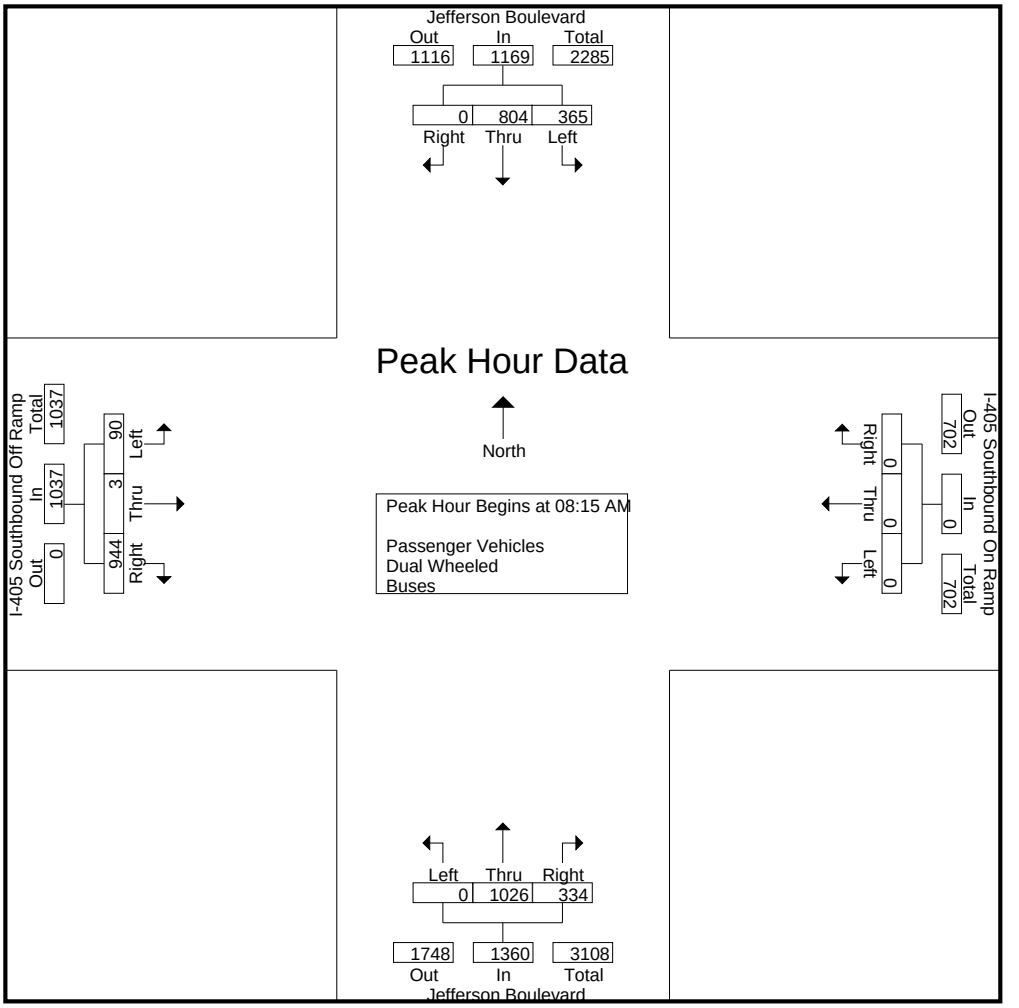

Peak Hour Analysis From 07:00 AM to 09:45 AM - Peak 1 of 1
Peak Hour for Each Approach Begins at:

	08:15 AM				07:00 AM				07:45 AM				08:30 AM			
+0 mins.	93	178	0	271	0	0	0	0	0	298	**97**	395	22	**2**	203	227
+15 mins.	**102**	188	0	290	0	0	0	0	0	**323**	96	**419**	19	0	261	280
+30 mins.	84	206	0	290	0	0	0	0	0	300	92	392	**29**	1	**286**	**316**
+45 mins.	86	**232**	0	**318**	0	0	0	0	0	258	86	344	26	0	233	259
Total Volume	365	804	0	1169	0	0	0	0	0	1179	371	1550	96	3	983	1082
% App. Total	31.2	68.8	0		0	0	0		0	76.1	23.9		8.9	0.3	90.9	
PHF	.895	.866	.000	.919	.000	.000	.000	.000	.000	.913	.956	.925	.828	.375	.859	.856

Counts Unlimited
PO Box 1178
Corona, CA 92878
(951) 268-6268

City of Los Angeles
N/S: Jefferson Boulevard
E/W: I-405 Southbound Ramps
Weather: Clear

File Name : 02_LAC_Jefferson_405S AM
Site Code : 16618886
Start Date : 11/28/2018
Page No : 1

Groups Printed- Passenger Vehicles

	Jefferson Boulevard Southbound				I-405 Southbound On Ramp Westbound				Jefferson Boulevard Northbound				I-405 Southbound Off Ramp Eastbound				
Start Time	Left	Thru	Right	App. Total	Left	Thru	Right	App. Total	Left	Thru	Right	App. Total	Left	Thru	Right	App. Total	Int. Total
07:00 AM	47	136	0	183	0	0	0	0	0	204	55	259	16	0	99	115	557
07:15 AM	75	141	0	216	0	0	0	0	0	273	79	352	14	0	137	151	719
07:30 AM	89	138	0	227	0	0	0	0	0	229	92	321	23	0	152	175	723
07:45 AM	67	190	0	257	0	0	0	0	0	286	96	382	18	1	165	184	823
Total	278	605	0	883	0	0	0	0	0	992	322	1314	71	1	553	625	2822
08:00 AM	86	164	0	250	0	0	0	0	0	316	94	410	16	0	148	164	824
08:15 AM	87	170	0	257	0	0	0	0	0	287	88	375	20	0	191	211	843
08:30 AM	98	181	0	279	0	0	0	0	0	250	81	331	22	2	198	222	832
08:45 AM	82	201	0	283	0	0	0	0	0	240	86	326	19	0	254	273	882
Total	353	716	0	1069	0	0	0	0	0	1093	349	1442	77	2	791	870	3381
09:00 AM	82	221	0	303	0	0	0	0	0	205	63	268	29	1	281	311	882
09:15 AM	62	186	0	248	0	0	0	0	0	235	82	317	24	0	230	254	819
09:30 AM	71	178	0	249	0	0	0	0	0	191	59	250	20	1	194	215	714
09:45 AM	54	188	0	242	0	0	0	0	0	192	57	249	39	0	195	234	725
Total	269	773	0	1042	0	0	0	0	0	823	261	1084	112	2	900	1014	3140
Grand Total	900	2094	0	2994	0	0	0	0	0	2908	932	3840	260	5	2244	2509	9343
Apprch %	30.1	69.9	0		0	0	0		0	75.7	24.3		10.4	0.2	89.4		
Total %	9.6	22.4	0	32	0	0	0	0	0	31.1	10	41.1	2.8	0.1	24	26.9	

	Jefferson Boulevard Southbound				I-405 Southbound On Ramp Westbound				Jefferson Boulevard Northbound				I-405 Southbound Off Ramp Eastbound				
Start Time	Left	Thru	Right	App. Total	Left	Thru	Right	App. Total	Left	Thru	Right	App. Total	Left	Thru	Right	App. Total	Int. Total
Peak Hour Analysis From 08:15 AM to 09:00 AM - Peak 1 of 1																	
Peak Hour for Entire Intersection Begins at 08:15 AM																	
08:15 AM	87	170	0	257	0	0	0	0	0	**287**	**88**	**375**	20	0	191	211	843
08:30 AM	**98**	181	0	279	0	0	0	0	0	250	81	331	22	**2**	198	222	832
08:45 AM	82	201	0	283	0	0	0	0	0	240	86	326	19	0	254	273	**882**
09:00 AM	82	**221**	0	**303**	0	0	0	0	0	205	63	268	**29**	1	**281**	**311**	882
Total Volume	349	773	0	1122	0	0	0	0	0	982	318	1300	90	3	924	1017	3439
% App. Total	31.1	68.9	0		0	0	0		0	75.5	24.5		8.8	0.3	90.9		
PHF	.890	.874	.000	.926	.000	.000	.000	.000	.000	.855	.903	.867	.776	.375	.822	.818	.975

Counts Unlimited
PO Box 1178
Corona, CA 92878
(951) 268-6268

City of Los Angeles
N/S: Jefferson Boulevard
E/W: I-405 Southbound Ramps
Weather: Clear

File Name : 02_LAC_Jefferson_405S AM
Site Code : 16618886
Start Date : 11/28/2018
Page No : 2

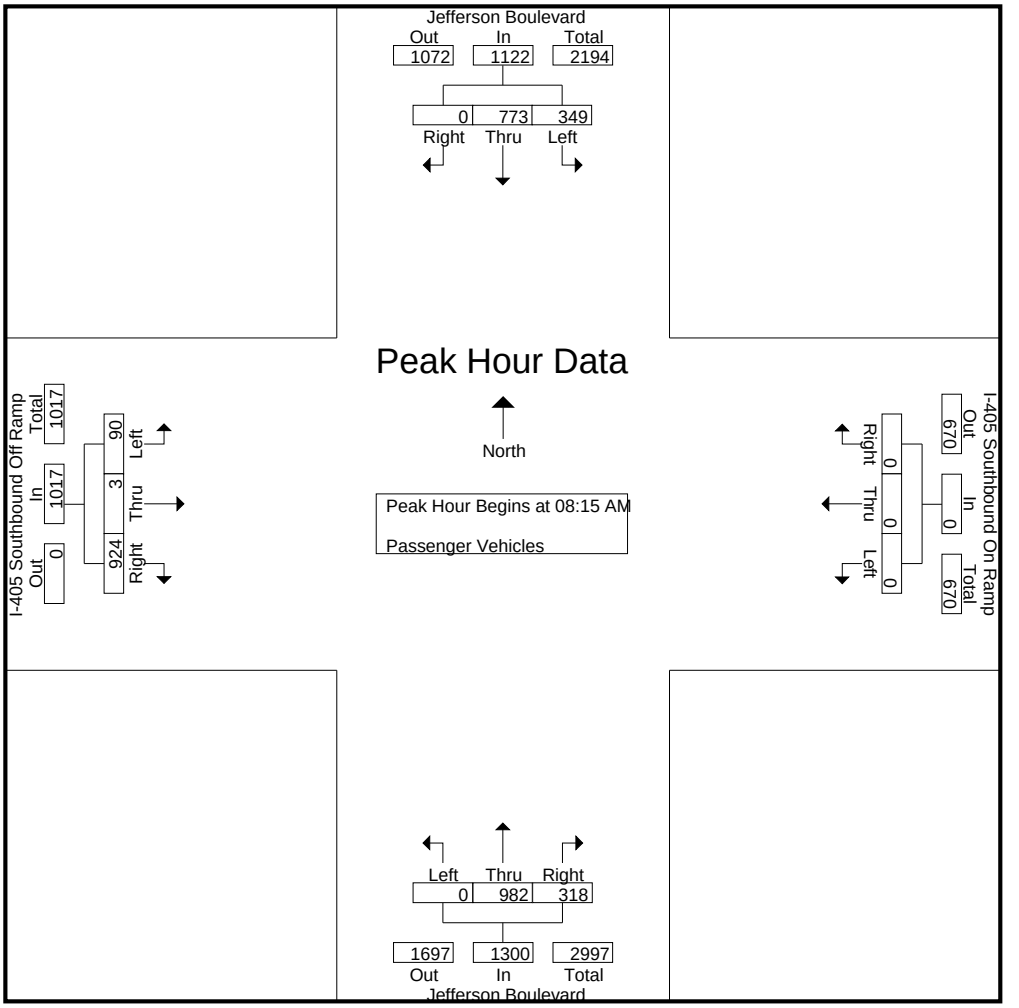

Peak Hour Analysis From 08:15 AM to 09:00 AM - Peak 1 of 1
Peak Hour for Each Approach Begins at:

	08:15 AM				08:15 AM				08:15 AM				08:15 AM			
+0 mins.	87	170	0	257	0	0	0	0	0	**287**	**88**	**375**	20	0	191	211
+15 mins.	**98**	181	0	279	0	0	0	0	0	250	81	331	22	**2**	198	222
+30 mins.	82	201	0	283	0	0	0	0	0	240	86	326	19	0	254	273
+45 mins.	82	**221**	0	**303**	0	0	0	0	0	205	63	268	**29**	1	**281**	**311**
Total Volume	349	773	0	1122	0	0	0	0	0	982	318	1300	90	3	924	1017
% App. Total	31.1	68.9	0		0	0	0		0	75.5	24.5		8.8	0.3	90.9	
PHF	.890	.874	.000	.926	.000	.000	.000	.000	.000	.855	.903	.867	.776	.375	.822	.818

Counts Unlimited
PO Box 1178
Corona, CA 92878
(951) 268-6268

City of Los Angeles
N/S: Jefferson Boulevard
E/W: I-405 Southbound Ramps
Weather: Clear

File Name : 02_LAC_Jefferson_405S AM
Site Code : 16618886
Start Date : 11/28/2018
Page No : 1

Groups Printed- Dual Wheeled

	Jefferson Boulevard Southbound				I-405 Southbound On Ramp Westbound				Jefferson Boulevard Northbound				I-405 Southbound Off Ramp Eastbound				
Start Time	Left	Thru	Right	App. Total	Left	Thru	Right	App. Total	Left	Thru	Right	App. Total	Left	Thru	Right	App. Total	Int. Total
07:00 AM	2	5	0	7	0	0	0	0	0	2	1	3	0	0	4	4	14
07:15 AM	0	2	0	2	0	0	0	0	0	5	1	6	2	0	4	6	14
07:30 AM	3	4	0	7	0	0	0	0	0	5	2	7	2	0	3	5	19
07:45 AM	0	2	0	2	0	0	0	0	0	9	1	10	0	0	2	2	14
Total	5	13	0	18	0	0	0	0	0	21	5	26	4	0	13	17	61
08:00 AM	1	5	0	6	0	0	0	0	0	5	2	7	0	0	3	3	16
08:15 AM	4	5	0	9	0	0	0	0	0	8	4	12	0	0	3	3	24
08:30 AM	3	4	0	7	0	0	0	0	0	6	5	11	0	0	4	4	22
08:45 AM	2	4	0	6	0	0	0	0	0	5	3	8	0	0	7	7	21
Total	10	18	0	28	0	0	0	0	0	24	14	38	0	0	17	17	83
09:00 AM	4	7	0	11	0	0	0	0	0	9	3	12	0	0	5	5	28
09:15 AM	0	6	0	6	0	0	0	0	0	3	1	4	1	0	3	4	14
09:30 AM	3	3	0	6	0	0	0	0	0	3	5	8	0	0	3	3	17
09:45 AM	2	1	0	3	0	0	0	0	0	4	1	5	0	0	2	2	10
Total	9	17	0	26	0	0	0	0	0	19	10	29	1	0	13	14	69
Grand Total	24	48	0	72	0	0	0	0	0	64	29	93	5	0	43	48	213
Apprch %	33.3	66.7	0		0	0	0		0	68.8	31.2		10.4	0	89.6		
Total %	11.3	22.5	0	33.8	0	0	0	0	0	30	13.6	43.7	2.3	0	20.2	22.5	

	Jefferson Boulevard Southbound				I-405 Southbound On Ramp Westbound				Jefferson Boulevard Northbound				I-405 Southbound Off Ramp Eastbound				
Start Time	Left	Thru	Right	App. Total	Left	Thru	Right	App. Total	Left	Thru	Right	App. Total	Left	Thru	Right	App. Total	Int. Total
Peak Hour Analysis From 08:15 AM to 09:00 AM - Peak 1 of 1																	
Peak Hour for Entire Intersection Begins at 08:15 AM																	
08:15 AM	**4**	5	0	9	0	0	0	0	0	8	4	**12**	0	0	3	3	24
08:30 AM	3	4	0	7	0	0	0	0	0	6	**5**	11	0	0	4	4	22
08:45 AM	2	4	0	6	0	0	0	0	0	5	3	8	0	0	**7**	**7**	21
09:00 AM	4	**7**	0	**11**	0	0	0	0	0	**9**	3	12	0	0	5	5	**28**
Total Volume	13	20	0	33	0	0	0	0	0	28	15	43	0	0	19	19	95
% App. Total	39.4	60.6	0		0	0	0		0	65.1	34.9		0	0	100		
PHF	.813	.714	.000	.750	.000	.000	.000	.000	.000	.778	.750	.896	.000	.000	.679	.679	.848

Counts Unlimited
PO Box 1178
Corona, CA 92878
(951) 268-6268

City of Los Angeles
N/S: Jefferson Boulevard
E/W: I-405 Southbound Ramps
Weather: Clear

File Name : 02_LAC_Jefferson_405S AM
Site Code : 16618886
Start Date : 11/28/2018
Page No : 2

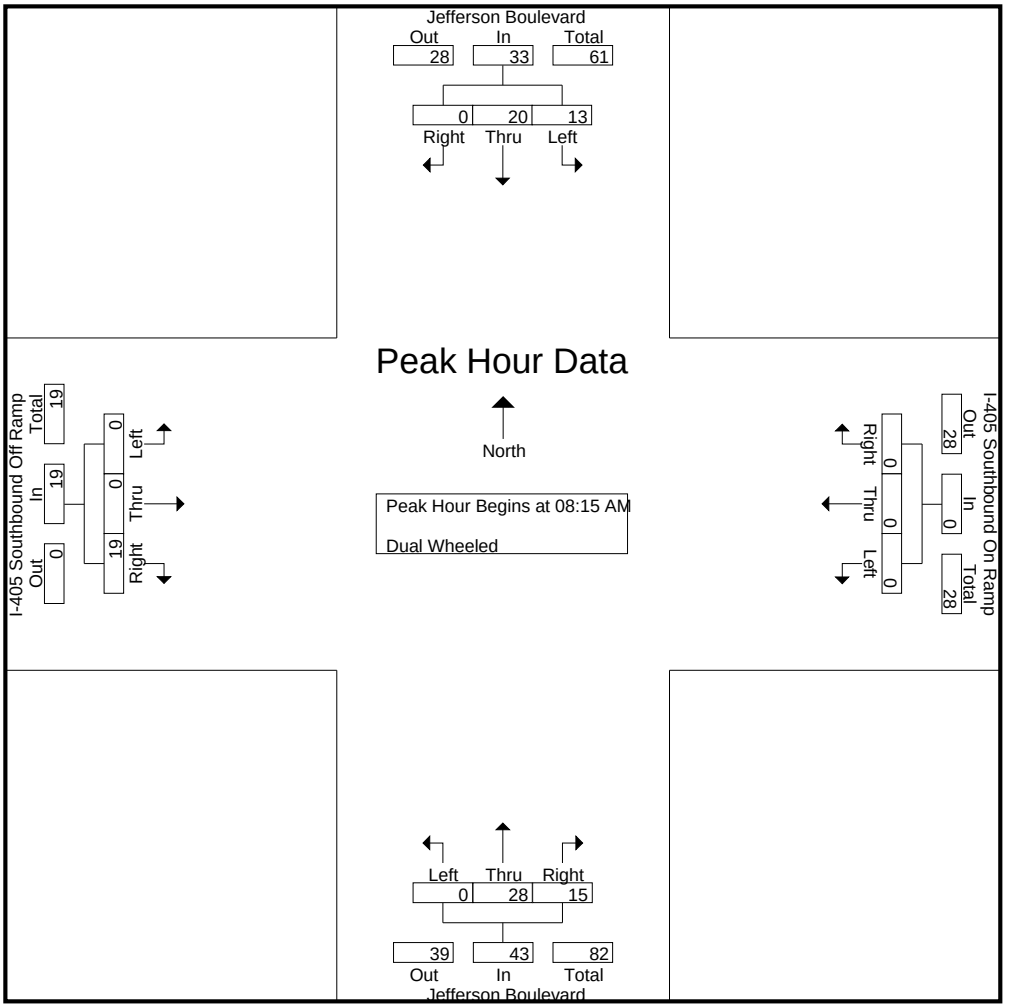

Peak Hour Analysis From 08:15 AM to 09:00 AM - Peak 1 of 1
Peak Hour for Each Approach Begins at:

	08:15 AM				08:15 AM				08:15 AM				08:15 AM			
+0 mins.	**4**	5	0	9	0	0	0	0	0	8	4	**12**	0	0	3	3
+15 mins.	3	4	0	7	0	0	0	0	0	6	**5**	11	0	0	4	4
+30 mins.	2	4	0	6	0	0	0	0	0	5	3	8	0	0	**7**	**7**
+45 mins.	4	**7**	0	**11**	0	0	0	0	0	**9**	3	12	0	0	5	5
Total Volume	13	20	0	33	0	0	0	0	0	28	15	43	0	0	19	19
% App. Total	39.4	60.6	0		0	0	0		0	65.1	34.9		0	0	100	
PHF	.813	.714	.000	.750	.000	.000	.000	.000	.000	.778	.750	.896	.000	.000	.679	.679

Counts Unlimited
PO Box 1178
Corona, CA 92878
(951) 268-6268

City of Los Angeles
N/S: Jefferson Boulevard
E/W: I-405 Southbound Ramps
Weather: Clear

File Name : 02_LAC_Jefferson_405S AM
Site Code : 16618886
Start Date : 11/28/2018
Page No : 1

Groups Printed- Buses

	Jefferson Boulevard Southbound				I-405 Southbound On Ramp Westbound				Jefferson Boulevard Northbound				I-405 Southbound Off Ramp Eastbound				
Start Time	Left	Thru	Right	App. Total	Left	Thru	Right	App. Total	Left	Thru	Right	App. Total	Left	Thru	Right	App. Total	Int. Total
07:00 AM	0	4	0	4	0	0	0	0	0	5	0	5	1	0	0	1	10
07:15 AM	1	2	0	3	0	0	0	0	0	2	0	2	0	0	0	0	5
07:30 AM	0	1	0	1	0	0	0	0	0	6	0	6	0	0	0	0	7
07:45 AM	0	2	0	2	0	0	0	0	0	3	0	3	0	0	0	0	5
Total	1	9	0	10	0	0	0	0	0	16	0	16	1	0	0	1	27
08:00 AM	0	2	0	2	0	0	0	0	0	2	0	2	0	0	0	0	4
08:15 AM	2	3	0	5	0	0	0	0	0	5	0	5	0	0	0	0	10
08:30 AM	1	3	0	4	0	0	0	0	0	2	0	2	0	0	1	1	7
08:45 AM	0	1	0	1	0	0	0	0	0	4	1	5	0	0	0	0	6
Total	3	9	0	12	0	0	0	0	0	13	1	14	0	0	1	1	27
09:00 AM	0	4	0	4	0	0	0	0	0	5	0	5	0	0	0	0	9
09:15 AM	0	2	0	2	0	0	0	0	0	3	1	4	1	0	0	1	7
09:30 AM	0	3	0	3	0	0	0	0	0	4	0	4	0	0	1	1	8
09:45 AM	0	2	0	2	0	0	0	0	0	4	1	5	0	0	0	0	7
Total	0	11	0	11	0	0	0	0	0	16	2	18	1	0	1	2	31
Grand Total	4	29	0	33	0	0	0	0	0	45	3	48	2	0	2	4	85
Apprch %	12.1	87.9	0		0	0	0		0	93.8	6.2		50	0	50		
Total %	4.7	34.1	0	38.8	0	0	0	0	0	52.9	3.5	56.5	2.4	0	2.4	4.7	

	Jefferson Boulevard Southbound				I-405 Southbound On Ramp Westbound				Jefferson Boulevard Northbound				I-405 Southbound Off Ramp Eastbound				
Start Time	Left	Thru	Right	App. Total	Left	Thru	Right	App. Total	Left	Thru	Right	App. Total	Left	Thru	Right	App. Total	Int. Total
Peak Hour Analysis From 08:15 AM to 09:00 AM - Peak 1 of 1																	
Peak Hour for Entire Intersection Begins at 08:15 AM																	
08:15 AM	**2**	3	0	**5**	0	0	0	0	0	**5**	0	**5**	0	0	0	0	**10**
08:30 AM	1	3	0	4	0	0	0	0	0	2	0	2	0	0	**1**	**1**	7
08:45 AM	0	1	0	1	0	0	0	0	0	4	**1**	5	0	0	0	0	6
09:00 AM	0	**4**	0	4	0	0	0	0	0	5	0	5	0	0	0	0	9
Total Volume	3	11	0	14	0	0	0	0	0	16	1	17	0	0	1	1	32
% App. Total	21.4	78.6	0		0	0	0		0	94.1	5.9		0	0	100		
PHF	.375	.688	.000	.700	.000	.000	.000	.000	.000	.800	.250	.850	.000	.000	.250	.250	.800

Counts Unlimited
PO Box 1178
Corona, CA 92878
(951) 268-6268

City of Los Angeles
N/S: Jefferson Boulevard
E/W: I-405 Southbound Ramps
Weather: Clear

File Name : 02_LAC_Jefferson_405S AM
Site Code : 16618886
Start Date : 11/28/2018
Page No : 2

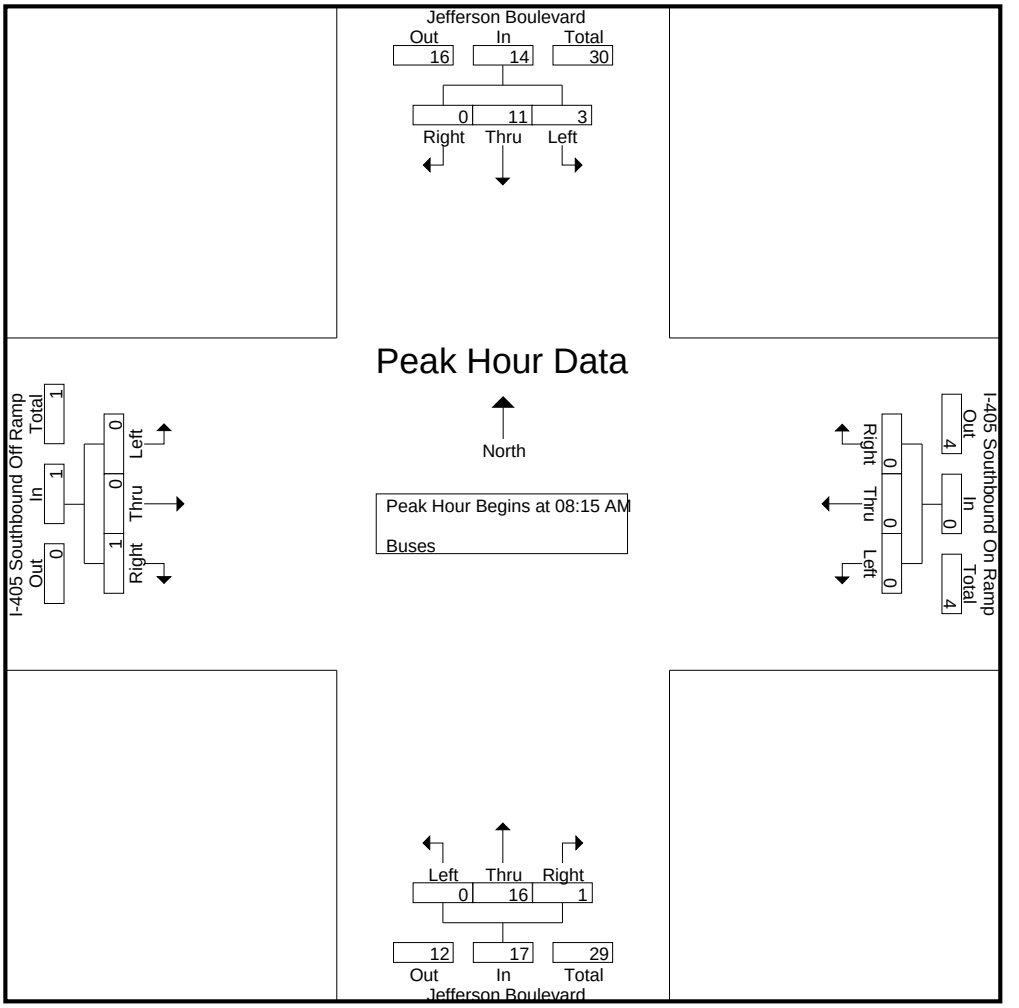

Peak Hour Analysis From 08:15 AM to 09:00 AM - Peak 1 of 1
Peak Hour for Each Approach Begins at:

	08:15 AM				08:15 AM				08:15 AM				08:15 AM			
+0 mins.	**2**	3	0	**5**	0	0	0	0	0	**5**	0	**5**	0	0	0	0
+15 mins.	1	3	0	4	0	0	0	0	0	2	0	2	0	0	**1**	**1**
+30 mins.	0	1	0	1	0	0	0	0	0	4	**1**	5	0	0	0	0
+45 mins.	0	**4**	0	4	0	0	0	0	0	5	0	5	0	0	0	0
Total Volume	3	11	0	14	0	0	0	0	0	16	1	17	0	0	1	1
% App. Total	21.4	78.6	0		0	0	0		0	94.1	5.9		0	0	100	
PHF	.375	.688	.000	.700	.000	.000	.000	.000	.000	.800	.250	.850	.000	.000	.250	.250

Counts Unlimited
PO Box 1178
Corona, CA 92878
(951) 268-6268

City of Los Angeles
N/S: Jefferson Boulevard
E/W: I-405 Southbound Ramps
Weather: Clear

File Name : 02_LAC_Jefferson_405S PM
Site Code : 16618886
Start Date : 11/28/2018
Page No : 1

Groups Printed- Passenger Vehicles - Dual Wheeled - Buses

	Jefferson Boulevard Southbound				I-405 Southbound On Ramp Westbound				Jefferson Boulevard Northbound				I-405 Southbound Off Ramp Eastbound				
Start Time	Left	Thru	Right	App. Total	Left	Thru	Right	App. Total	Left	Thru	Right	App. Total	Left	Thru	Right	App. Total	Int. Total
03:00 PM	95	195	0	290	0	0	0	0	0	265	94	359	25	0	53	78	727
03:15 PM	101	198	0	299	0	0	0	0	0	248	74	322	17	0	52	69	690
03:30 PM	118	212	0	330	0	0	0	0	0	278	138	416	19	0	59	78	824
03:45 PM	93	246	0	339	0	0	0	0	0	284	124	408	14	0	42	56	803
Total	407	851	0	1258	0	0	0	0	0	1075	430	1505	75	0	206	281	3044
04:00 PM	159	214	0	373	0	0	0	0	0	252	137	389	16	0	46	62	824
04:15 PM	127	240	0	367	0	0	0	0	0	276	142	418	16	0	33	49	834
04:30 PM	139	232	0	371	0	0	0	0	0	244	102	346	8	1	28	37	754
04:45 PM	116	222	0	338	0	0	0	0	0	274	122	396	12	2	23	37	771
Total	541	908	0	1449	0	0	0	0	0	1046	503	1549	52	3	130	185	3183
05:00 PM	129	243	0	372	0	0	0	0	0	259	115	374	10	0	25	35	781
05:15 PM	118	212	0	330	0	0	0	0	0	288	112	400	5	0	23	28	758
05:30 PM	131	219	0	350	0	0	0	0	0	290	103	393	14	0	13	27	770
05:45 PM	110	234	0	344	0	0	0	0	0	209	58	267	11	0	19	30	641
Total	488	908	0	1396	0	0	0	0	0	1046	388	1434	40	0	80	120	2950
Grand Total	1436	2667	0	4103	0	0	0	0	0	3167	1321	4488	167	3	416	586	9177
Apprch %	35	65	0		0	0	0		0	70.6	29.4		28.5	0.5	71		
Total %	15.6	29.1	0	44.7	0	0	0	0	0	34.5	14.4	48.9	1.8	0	4.5	6.4	
Passenger Vehicles	1411	2605	0	4016	0	0	0	0	0	3085	1291	4376	162	3	408	573	8965
% Passenger Vehicles	98.3	97.7	0	97.9	0	0	0	0	0	97.4	97.7	97.5	97	100	98.1	97.8	97.7
Dual Wheeled	24	33	0	57	0	0	0	0	0	37	26	63	5	0	6	11	131
% Dual Wheeled	1.7	1.2	0	1.4	0	0	0	0	0	1.2	2	1.4	3	0	1.4	1.9	1.4
Buses	1	29	0	30	0	0	0	0	0	45	4	49	0	0	2	2	81
% Buses	0.1	1.1	0	0.7	0	0	0	0	0	1.4	0.3	1.1	0	0	0.5	0.3	0.9

	Jefferson Boulevard Southbound				I-405 Southbound On Ramp Westbound				Jefferson Boulevard Northbound				I-405 Southbound Off Ramp Eastbound				
Start Time	Left	Thru	Right	App. Total	Left	Thru	Right	App. Total	Left	Thru	Right	App. Total	Left	Thru	Right	App. Total	Int. Total
Peak Hour Analysis From 03:00 PM to 05:45 PM - Peak 1 of 1																	
Peak Hour for Entire Intersection Begins at 03:30 PM																	
03:30 PM	118	212	0	330	0	0	0	0	0	278	138	416	**19**	0	**59**	**78**	824
03:45 PM	93	**246**	0	339	0	0	0	0	0	**284**	124	408	14	0	42	56	803
04:00 PM	**159**	214	0	**373**	0	0	0	0	0	252	137	389	16	0	46	62	824
04:15 PM	127	240	0	367	0	0	0	0	0	276	**142**	**418**	16	0	33	49	**834**
Total Volume	497	912	0	1409	0	0	0	0	0	1090	541	1631	65	0	180	245	3285
% App. Total	35.3	64.7	0		0	0	0		0	66.8	33.2		26.5	0	73.5		
PHF	.781	.927	.000	.944	.000	.000	.000	.000	.000	.960	.952	.975	.855	.000	.763	.785	.985

Counts Unlimited
PO Box 1178
Corona, CA 92878
(951) 268-6268

City of Los Angeles
N/S: Jefferson Boulevard
E/W: I-405 Southbound Ramps
Weather: Clear

File Name : 02_LAC_Jefferson_405S PM
Site Code : 16618886
Start Date : 11/28/2018
Page No : 2

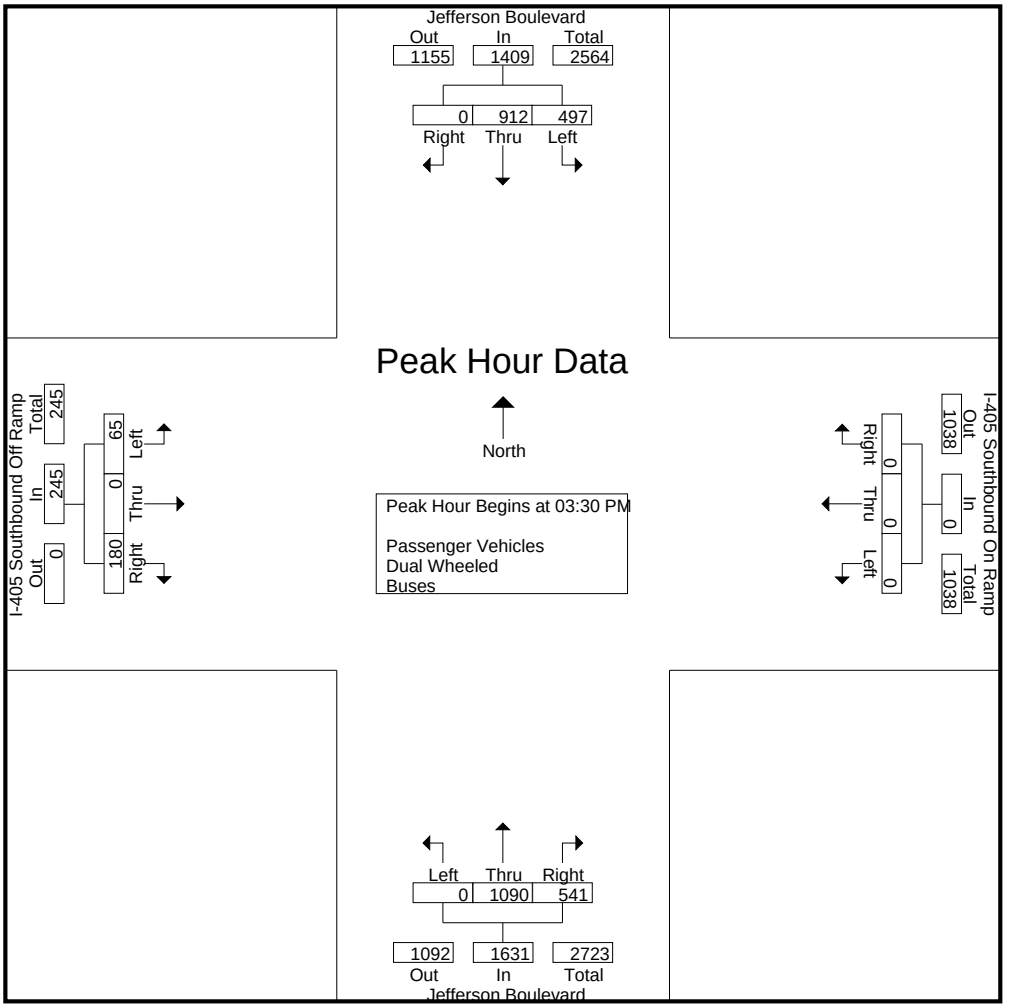

Peak Hour Analysis From 03:00 PM to 05:45 PM - Peak 1 of 1
Peak Hour for Each Approach Begins at:

	03:45 PM				03:00 PM				03:30 PM				03:00 PM			
+0 mins.	93	**246**	0	339	0	0	0	0	0	278	138	416	**25**	0	53	**78**
+15 mins.	**159**	214	0	**373**	0	0	0	0	0	**284**	124	408	17	0	52	69
+30 mins.	127	240	0	367	0	0	0	0	0	252	137	389	19	0	**59**	78
+45 mins.	139	232	0	371	0	0	0	0	0	276	**142**	**418**	14	0	42	56
Total Volume	518	932	0	1450	0	0	0	0	0	1090	541	1631	75	0	206	281
% App. Total	35.7	64.3	0		0	0	0		0	66.8	33.2		26.7	0	73.3	
PHF	.814	.947	.000	.972	.000	.000	.000	.000	.000	.960	.952	.975	.750	.000	.873	.901

Counts Unlimited
PO Box 1178
Corona, CA 92878
(951) 268-6268

City of Los Angeles
N/S: Jefferson Boulevard
E/W: I-405 Southbound Ramps
Weather: Clear

File Name : 02_LAC_Jefferson_405S PM
Site Code : 16618886
Start Date : 11/28/2018
Page No : 1

Groups Printed- Passenger Vehicles

	Jefferson Boulevard Southbound				I-405 Southbound On Ramp Westbound				Jefferson Boulevard Northbound				I-405 Southbound Off Ramp Eastbound				
Start Time	Left	Thru	Right	App. Total	Left	Thru	Right	App. Total	Left	Thru	Right	App. Total	Left	Thru	Right	App. Total	Int. Total
03:00 PM	92	189	0	281	0	0	0	0	0	258	90	348	24	0	52	76	705
03:15 PM	99	195	0	294	0	0	0	0	0	238	73	311	17	0	49	66	671
03:30 PM	116	205	0	321	0	0	0	0	0	271	133	404	18	0	58	76	801
03:45 PM	87	240	0	327	0	0	0	0	0	275	123	398	14	0	41	55	780
Total	394	829	0	1223	0	0	0	0	0	1042	419	1461	73	0	200	273	2957
04:00 PM	157	207	0	364	0	0	0	0	0	248	133	381	16	0	45	61	806
04:15 PM	124	233	0	357	0	0	0	0	0	269	139	408	14	0	33	47	812
04:30 PM	137	226	0	363	0	0	0	0	0	234	100	334	8	1	28	37	734
04:45 PM	116	216	0	332	0	0	0	0	0	265	115	380	11	2	23	36	748
Total	534	882	0	1416	0	0	0	0	0	1016	487	1503	49	3	129	181	3100
05:00 PM	125	240	0	365	0	0	0	0	0	253	115	368	10	0	24	34	767
05:15 PM	117	206	0	323	0	0	0	0	0	282	111	393	5	0	23	28	744
05:30 PM	131	216	0	347	0	0	0	0	0	286	101	387	14	0	13	27	761
05:45 PM	110	232	0	342	0	0	0	0	0	206	58	264	11	0	19	30	636
Total	483	894	0	1377	0	0	0	0	0	1027	385	1412	40	0	79	119	2908
Grand Total	1411	2605	0	4016	0	0	0	0	0	3085	1291	4376	162	3	408	573	8965
Apprch %	35.1	64.9	0		0	0	0		0	70.5	29.5		28.3	0.5	71.2		
Total %	15.7	29.1	0	44.8	0	0	0	0	0	34.4	14.4	48.8	1.8	0	4.6	6.4	

	Jefferson Boulevard Southbound				I-405 Southbound On Ramp Westbound				Jefferson Boulevard Northbound				I-405 Southbound Off Ramp Eastbound				
Start Time	Left	Thru	Right	App. Total	Left	Thru	Right	App. Total	Left	Thru	Right	App. Total	Left	Thru	Right	App. Total	Int. Total
Peak Hour Analysis From 03:30 PM to 04:15 PM - Peak 1 of 1																	
Peak Hour for Entire Intersection Begins at 03:30 PM																	
03:30 PM	116	205	0	321	0	0	0	0	0	271	133	404	**18**	0	**58**	**76**	801
03:45 PM	87	**240**	0	327	0	0	0	0	0	**275**	123	398	14	0	41	55	780
04:00 PM	**157**	207	0	**364**	0	0	0	0	0	248	133	381	16	0	45	61	806
04:15 PM	124	233	0	357	0	0	0	0	0	269	**139**	**408**	14	0	33	47	**812**
Total Volume	484	885	0	1369	0	0	0	0	0	1063	528	1591	62	0	177	239	3199
% App. Total	35.4	64.6	0		0	0	0		0	66.8	33.2		25.9	0	74.1		
PHF	.771	.922	.000	.940	.000	.000	.000	.000	.000	.966	.950	.975	.861	.000	.763	.786	.985

Counts Unlimited
PO Box 1178
Corona, CA 92878
(951) 268-6268

City of Los Angeles
N/S: Jefferson Boulevard
E/W: I-405 Southbound Ramps
Weather: Clear

File Name : 02_LAC_Jefferson_405S PM
Site Code : 16618886
Start Date : 11/28/2018
Page No : 2

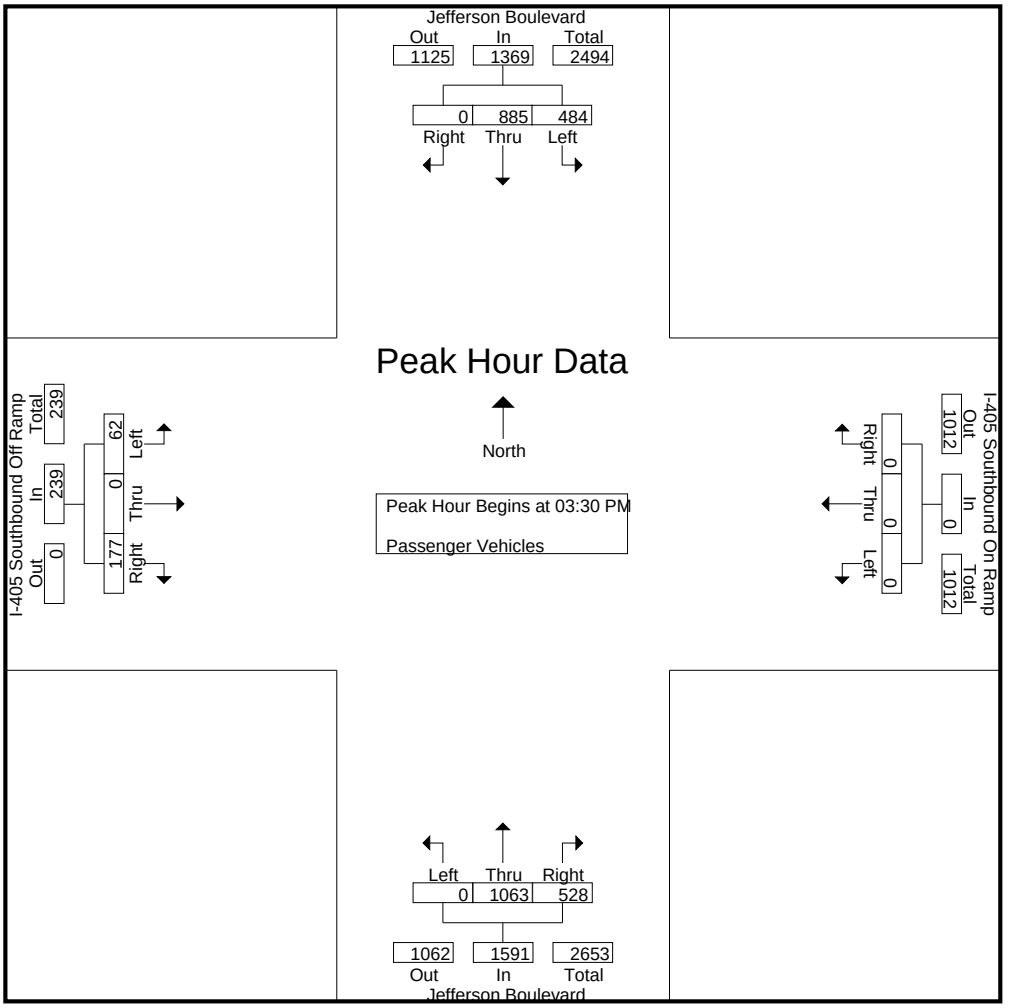

Peak Hour Analysis From 03:30 PM to 04:15 PM - Peak 1 of 1
Peak Hour for Each Approach Begins at:

	03:30 PM				03:30 PM				03:30 PM				03:30 PM			
+0 mins.	116	205	0	321	0	0	0	0	0	271	133	404	**18**	0	**58**	**76**
+15 mins.	87	**240**	0	327	0	0	0	0	0	**275**	123	398	14	0	41	55
+30 mins.	**157**	207	0	**364**	0	0	0	0	0	248	133	381	16	0	45	61
+45 mins.	124	233	0	357	0	0	0	0	0	269	**139**	**408**	14	0	33	47
Total Volume	484	885	0	1369	0	0	0	0	0	1063	528	1591	62	0	177	239
% App. Total	35.4	64.6	0		0	0	0		0	66.8	33.2		25.9	0	74.1	
PHF	.771	.922	.000	.940	.000	.000	.000	.000	.000	.966	.950	.975	.861	.000	.763	.786

Counts Unlimited
PO Box 1178
Corona, CA 92878
(951) 268-6268

City of Los Angeles
N/S: Jefferson Boulevard
E/W: I-405 Southbound Ramps
Weather: Clear

File Name : 02_LAC_Jefferson_405S PM
Site Code : 16618886
Start Date : 11/28/2018
Page No : 1

Groups Printed- Dual Wheeled

	Jefferson Boulevard Southbound				I-405 Southbound On Ramp Westbound				Jefferson Boulevard Northbound				I-405 Southbound Off Ramp Eastbound				
Start Time	Left	Thru	Right	App. Total	Left	Thru	Right	App. Total	Left	Thru	Right	App. Total	Left	Thru	Right	App. Total	Int. Total
03:00 PM	3	3	0	6	0	0	0	0	0	5	4	9	1	0	0	1	16
03:15 PM	2	1	0	3	0	0	0	0	0	8	0	8	0	0	3	3	14
03:30 PM	2	4	0	6	0	0	0	0	0	3	4	7	1	0	1	2	15
03:45 PM	6	3	0	9	0	0	0	0	0	3	1	4	0	0	1	1	14
Total	13	11	0	24	0	0	0	0	0	19	9	28	2	0	5	7	59
04:00 PM	1	4	0	5	0	0	0	0	0	1	3	4	0	0	1	1	10
04:15 PM	3	2	0	5	0	0	0	0	0	3	3	6	2	0	0	2	13
04:30 PM	2	5	0	7	0	0	0	0	0	4	2	6	0	0	0	0	13
04:45 PM	0	4	0	4	0	0	0	0	0	4	6	10	1	0	0	1	15
Total	6	15	0	21	0	0	0	0	0	12	14	26	3	0	1	4	51
05:00 PM	4	2	0	6	0	0	0	0	0	4	0	4	0	0	0	0	10
05:15 PM	1	3	0	4	0	0	0	0	0	0	1	1	0	0	0	0	5
05:30 PM	0	1	0	1	0	0	0	0	0	1	2	3	0	0	0	0	4
05:45 PM	0	1	0	1	0	0	0	0	0	1	0	1	0	0	0	0	2
Total	5	7	0	12	0	0	0	0	0	6	3	9	0	0	0	0	21
Grand Total	24	33	0	57	0	0	0	0	0	37	26	63	5	0	6	11	131
Apprch %	42.1	57.9	0		0	0	0		0	58.7	41.3		45.5	0	54.5		
Total %	18.3	25.2	0	43.5	0	0	0	0	0	28.2	19.8	48.1	3.8	0	4.6	8.4	

	Jefferson Boulevard Southbound				I-405 Southbound On Ramp Westbound				Jefferson Boulevard Northbound				I-405 Southbound Off Ramp Eastbound				
Start Time	Left	Thru	Right	App. Total	Left	Thru	Right	App. Total	Left	Thru	Right	App. Total	Left	Thru	Right	App. Total	Int. Total
Peak Hour Analysis From 03:30 PM to 04:15 PM - Peak 1 of 1																	
Peak Hour for Entire Intersection Begins at 03:30 PM																	
03:30 PM	2	**4**	0	6	0	0	0	0	0	**3**	**4**	**7**	1	0	**1**	**2**	**15**
03:45 PM	**6**	3	0	**9**	0	0	0	0	0	3	1	4	0	0	1	1	14
04:00 PM	1	4	0	5	0	0	0	0	0	1	3	4	0	0	1	1	10
04:15 PM	3	2	0	5	0	0	0	0	0	3	3	6	**2**	0	0	2	13
Total Volume	12	13	0	25	0	0	0	0	0	10	11	21	3	0	3	6	52
% App. Total	48	52	0		0	0	0		0	47.6	52.4		50	0	50		
PHF	.500	.813	.000	.694	.000	.000	.000	.000	.000	.833	.688	.750	.375	.000	.750	.750	.867

Counts Unlimited
PO Box 1178
Corona, CA 92878
(951) 268-6268

City of Los Angeles
N/S: Jefferson Boulevard
E/W: I-405 Southbound Ramps
Weather: Clear

File Name : 02_LAC_Jefferson_405S PM
Site Code : 16618886
Start Date : 11/28/2018
Page No : 2

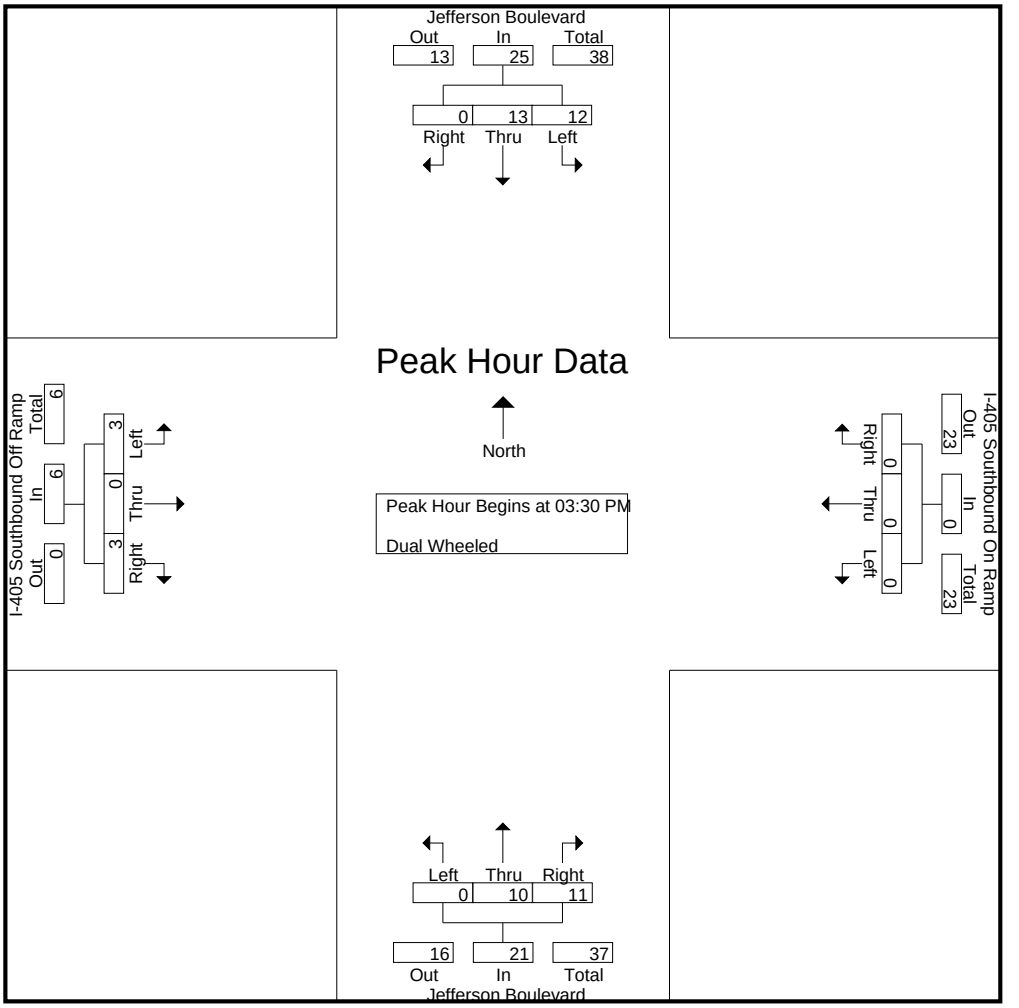

Peak Hour Analysis From 03:30 PM to 04:15 PM - Peak 1 of 1
Peak Hour for Each Approach Begins at:

	03:30 PM				03:30 PM				03:30 PM				03:30 PM			
+0 mins.	2	**4**	0	6	0	0	0	0	0	**3**	**4**	**7**	1	0	**1**	**2**
+15 mins.	**6**	3	0	**9**	0	0	0	0	0	3	1	4	0	0	1	1
+30 mins.	1	4	0	5	0	0	0	0	0	1	3	4	0	0	1	1
+45 mins.	3	2	0	5	0	0	0	0	0	3	3	6	**2**	0	0	2
Total Volume	12	13	0	25	0	0	0	0	0	10	11	21	3	0	3	6
% App. Total	48	52	0		0	0	0		0	47.6	52.4		50	0	50	
PHF	.500	.813	.000	.694	.000	.000	.000	.000	.000	.833	.688	.750	.375	.000	.750	.750

Counts Unlimited
PO Box 1178
Corona, CA 92878
(951) 268-6268

City of Los Angeles
N/S: Jefferson Boulevard
E/W: I-405 Southbound Ramps
Weather: Clear

File Name : 02_LAC_Jefferson_405S PM
Site Code : 16618886
Start Date : 11/28/2018
Page No : 1

Groups Printed- Buses

	Jefferson Boulevard Southbound				I-405 Southbound On Ramp Westbound				Jefferson Boulevard Northbound				I-405 Southbound Off Ramp Eastbound				
Start Time	Left	Thru	Right	App. Total	Left	Thru	Right	App. Total	Left	Thru	Right	App. Total	Left	Thru	Right	App. Total	Int. Total
03:00 PM	0	3	0	3	0	0	0	0	0	2	0	2	0	0	1	1	6
03:15 PM	0	2	0	2	0	0	0	0	0	2	1	3	0	0	0	0	5
03:30 PM	0	3	0	3	0	0	0	0	0	4	1	5	0	0	0	0	8
03:45 PM	0	3	0	3	0	0	0	0	0	6	0	6	0	0	0	0	9
Total	0	11	0	11	0	0	0	0	0	14	2	16	0	0	1	1	28
04:00 PM	1	3	0	4	0	0	0	0	0	3	1	4	0	0	0	0	8
04:15 PM	0	5	0	5	0	0	0	0	0	4	0	4	0	0	0	0	9
04:30 PM	0	1	0	1	0	0	0	0	0	6	0	6	0	0	0	0	7
04:45 PM	0	2	0	2	0	0	0	0	0	5	1	6	0	0	0	0	8
Total	1	11	0	12	0	0	0	0	0	18	2	20	0	0	0	0	32
05:00 PM	0	1	0	1	0	0	0	0	0	2	0	2	0	0	1	1	4
05:15 PM	0	3	0	3	0	0	0	0	0	6	0	6	0	0	0	0	9
05:30 PM	0	2	0	2	0	0	0	0	0	3	0	3	0	0	0	0	5
05:45 PM	0	1	0	1	0	0	0	0	0	2	0	2	0	0	0	0	3
Total	0	7	0	7	0	0	0	0	0	13	0	13	0	0	1	1	21
Grand Total	1	29	0	30	0	0	0	0	0	45	4	49	0	0	2	2	81
Apprch %	3.3	96.7	0		0	0	0		0	91.8	8.2		0	0	100		
Total %	1.2	35.8	0	37	0	0	0	0	0	55.6	4.9	60.5	0	0	2.5	2.5	

	Jefferson Boulevard Southbound				I-405 Southbound On Ramp Westbound				Jefferson Boulevard Northbound				I-405 Southbound Off Ramp Eastbound				
Start Time	Left	Thru	Right	App. Total	Left	Thru	Right	App. Total	Left	Thru	Right	App. Total	Left	Thru	Right	App. Total	Int. Total
Peak Hour Analysis From 03:30 PM to 04:15 PM - Peak 1 of 1																	
Peak Hour for Entire Intersection Begins at 03:30 PM																	
03:30 PM	0	3	0	3	0	0	0	0	0	4	**1**	5	0	0	0	0	8
03:45 PM	0	3	0	3	0	0	0	0	0	**6**	0	**6**	0	0	0	0	**9**
04:00 PM	**1**	3	0	4	0	0	0	0	0	3	1	4	0	0	0	0	8
04:15 PM	0	**5**	0	**5**	0	0	0	0	0	4	0	4	0	0	0	0	9
Total Volume	1	14	0	15	0	0	0	0	0	17	2	19	0	0	0	0	34
% App. Total	6.7	93.3	0		0	0	0		0	89.5	10.5		0	0	0		
PHF	.250	.700	.000	.750	.000	.000	.000	.000	.000	.708	.500	.792	.000	.000	.000	.000	.944

Counts Unlimited
PO Box 1178
Corona, CA 92878
(951) 268-6268

City of Los Angeles
N/S: Jefferson Boulevard
E/W: I-405 Southbound Ramps
Weather: Clear

File Name : 02_LAC_Jefferson_405S PM
Site Code : 16618886
Start Date : 11/28/2018
Page No : 2

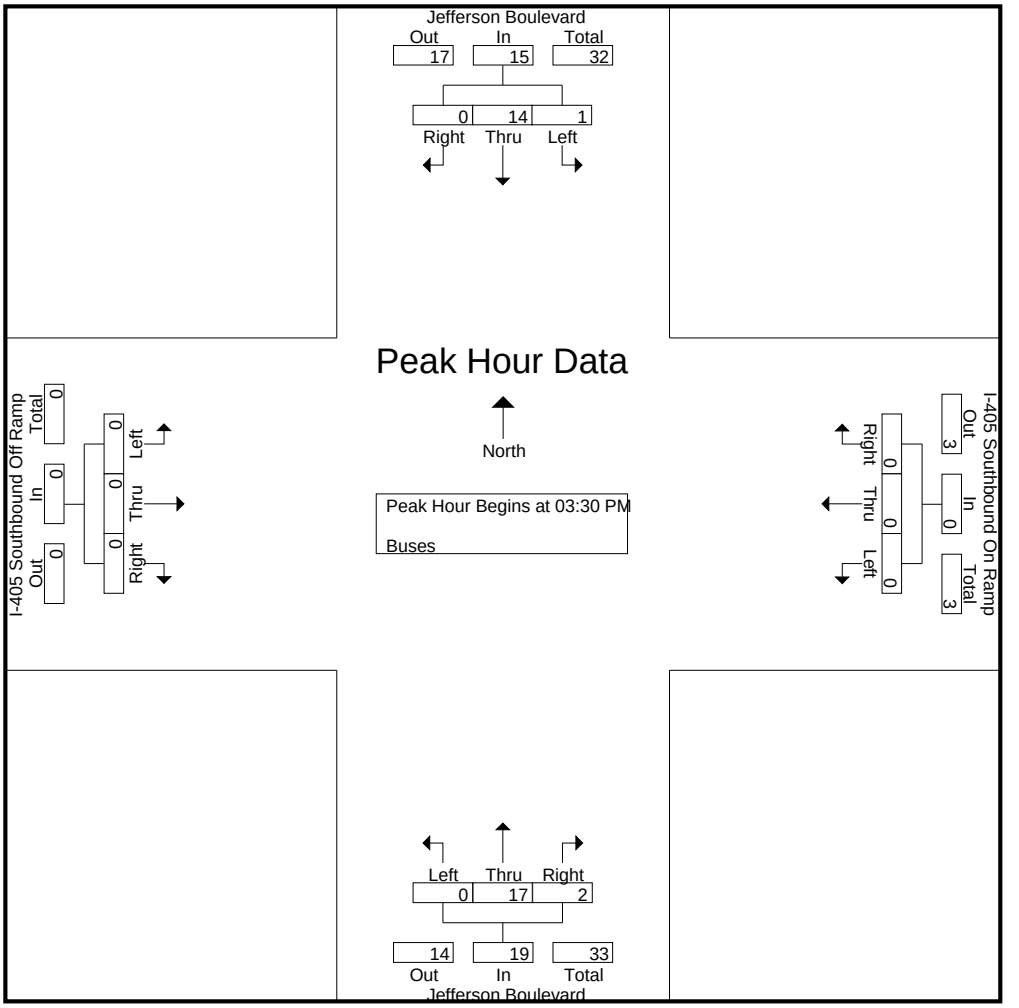

Peak Hour Analysis From 03:30 PM to 04:15 PM - Peak 1 of 1
Peak Hour for Each Approach Begins at:

	03:30 PM				03:30 PM				03:30 PM				03:30 PM			
+0 mins.	0	3	0	3	0	0	0	0	0	4	**1**	5	0	0	0	0
+15 mins.	0	3	0	3	0	0	0	0	0	**6**	0	**6**	0	0	0	0
+30 mins.	**1**	3	0	4	0	0	0	0	0	3	1	4	0	0	0	0
+45 mins.	0	**5**	0	**5**	0	0	0	0	0	4	0	4	0	0	0	0
Total Volume	1	14	0	15	0	0	0	0	0	17	2	19	0	0	0	0
% App. Total	6.7	93.3	0		0	0	0		0	89.5	10.5		0	0	0	
PHF	.250	.700	.000	.750	.000	.000	.000	.000	.000	.708	.500	.792	.000	.000	.000	.000

City Of Los Angeles
Department Of Transportation
MANUAL TRAFFIC COUNT SUMMARY

STREET:

North/South Jefferson Boulevard

East/West I-405 Southbound Ramps

Day: Wednesday **Date:** November 25, 2018 **Weather:** CLEAR

Hours: 7-10AM 3-6PM **Staff:** CUI

School Day: YES **District:** Western Los Angele I/S CODE 0

	N/B	S/B	E/B	W/B
DUAL-WHEELED	156	129	59	0
BIKES	0	1	7	6
BUSES	97	63	6	0

	N/B	TIME	S/B	TIME	E/B	TIME	W/B	TIME
AM PK 15 MIN	419	8.00	318	9.00	316	9.00	0	7.00
PM PK 15 MIN	418	4.15	373	4.00	78	3.00	0	3.00
AM PK HOUR	1550	7.45	1169	8.15	1082	8.30	0	7.00
PM PK HOUR	1631	3.30	1450	3.45	281	3.00	0	3.00

NORTHBOUND Approach

Hours	Lt	Th	Rt	Total
7-8	0	1029	327	1356
8-9	0	1130	364	1494
9-10	0	858	273	1131
3-4	0	1075	430	1505
4-5	0	1046	503	1549
5-6	0	1046	388	1434
TOTAL	0	6184	2285	8469

SOUTHBOUND Approach

Hours	Lt	Th	Rt	Total
7-8	284	627	0	911
8-9	366	743	0	1109
9-10	278	801	0	1079
3-4	407	851	0	1258
4-5	541	908	0	1449
5-6	488	908	0	1396
TOTAL	2364	4838	0	7202

TOTAL	**XING S/L**		**XING N/L**	
N-S	Ped	Sch	Ped	Sch
2267	0	0	0	0
2603	1	0	0	0
2210	4	0	0	0
2763	0	0	0	0
2998	2	0	0	0
2830	1	0	0	0
15671	8	0	0	0

EASTBOUND Approach

Hours	Lt	Th	Rt	Total
7-8	76	1	566	643
8-9	77	2	809	888
9-10	114	2	914	1030
3-4	75	0	206	281
4-5	52	3	130	185
5-6	40	0	80	120
TOTAL	434	8	2705	3147

WESTBOUND Approach

Hours	Lt	Th	Rt	Total
7-8	0	0	0	0
8-9	0	0	0	0
9-10	0	0	0	0
3-4	0	0	0	0
4-5	0	0	0	0
5-6	0	0	0	0
TOTAL	0	0	0	0

TOTAL	**XING W/L**		**XING E/L**	
E-W	Ped	Sch	Ped	Sch
643	0	0	5	0
888	0	0	11	0
1030	0	0	6	0
281	2	0	13	1
185	0	0	14	0
120	0	0	9	0
3147	2	0	58	1

(Rev Oct 06)

City of Los Angeles
Department of Transportation

BICYCLE COUNT SUMMARY

STREET:
North/South: Jefferson Boulevard
East/West: I-405 Southbound Ramps

Day:	Wednesday	Date:	11/25/2018	Weather:	CLEAR
School Day:	Yes	District:	Western Los Ang	I/S Code:	0
Hours:	7-10 AM, 3-6 PM	Staff:	CUI		

NORTHBOUND Approach

Hours	Lt	Th	Rt	Total
7-8	0	0	0	0
8-9	0	0	0	0
9-10	0	0	0	0
3-4	0	0	0	0
4-5	0	0	0	0
5-6	0	0	0	0
TOTAL	0	0	0	0

SOUTHBOUND Approach

Hours	Lt	Th	Rt	Total
7-8	1	0	0	1
8-9	0	0	0	0
9-10	0	0	0	0
3-4	0	0	0	0
4-5	0	0	0	0
5-6	0	0	0	0
TOTAL	1	0	0	1

TOTAL

Hours	N-S
7-8	1
8-9	0
9-10	0
3-4	0
4-5	0
5-6	0
TOTAL	1

EASTBOUND Approach

Hours	Lt	Th	Rt	Total
7-8	0	0	0	0
8-9	0	1	0	1
9-10	0	0	0	0
3-4	0	2	0	2
4-5	2	2	0	4
5-6	0	0	0	0
TOTAL	2	5	0	7

WESTBOUND Approach

Hours	Lt	Th	Rt	Total
7-8	0	0	0	0
8-9	0	0	0	0
9-10	0	1	0	1
3-4	0	2	0	2
4-5	0	2	0	2
5-6	0	1	0	1
TOTAL	0	6	0	6

TOTAL

Hours	E-W
7-8	0
8-9	1
9-10	1
3-4	4
4-5	6
5-6	1
TOTAL	13

REMARKS (6 hour total):

	NB	SB	EB	WB	TOTAL
- Female Riders	0	0	2	1	3
- No helmet riders	0	0	5	3	8
- Sidewalk Riding	0	0	4	2	6
- Wrong way riding	0	0	1	1	2

NB: Northbound, **SB**: Southbound, **EB**: Eastbound, **WB**: Westbound, **I/S**: Intersection

Source: CUI

LADOT 2015 CMP

City of Los Angeles
Department of Transportation

PEDESTRIAN COUNT SUMMARY

STREET:					
North/South:	Jefferson Boulevard				
East/West:	I-405 Southbound Ramps				
Day:	Wednesday	Date:	################	Weather:	CLEAR
School Day:	YES	District:	Western Los Angele	I/S Code:	0
Hours:	7-10 AM, 3-6 PM	Staff:	CUI		

AM PEAK PERIOD

15 Min. Interval	N-LEG	S-LEG	E-LEG	W-LEG	TOTAL
7:00-7:15	0	0	1	0	1
7:15-7:30	0	0	1	0	1
7:30-7:45	0	0	2	0	2
7:45-8:00	0	0	1	0	1
8:00-8:15	0	1	3	0	4
8:15-8:30	0	0	3	0	3
8:30-8:45	0	0	4	0	4
8:45-9:00	0	0	1	0	1
9:00-9:15	0	2	2	0	4
9:15-9:30	0	0	3	0	3
9:30-9:45	0	2	0	0	2
9:45-10:00	0	0	1	0	1
Hours					
7 - 8	0	0	5	0	5
8 - 9	0	1	11	0	12
9 - 10	0	4	6	0	10
TOTAL	0	5	22	0	27

PM PEAK PERIOD

15 Min. Interval	N-LEG	S-LEG	E-LEG	W-LEG	TOTAL
3:00-3:15	0	0	6	2	8
3:15-3:30	0	0	6	2	8
3:30-3:45	0	0	12	0	12
3:45-4:00	0	0	2	0	2
4:00-4:15	0	2	6	0	8
4:15-4:30	0	0	6	0	6
4:30-4:45	0	2	10	0	12
4:45-5:00	0	0	6	0	6
5:00-5:15	0	2	10	0	12
5:15-5:30	0	0	6	0	6
5:30-5:45	0	0	2	0	2
5:45-6:00	0	0	0	0	0
Hours					
3 - 4	0	0	26	4	30
4 - 5	0	4	28	0	32
5 - 6	0	2	18	0	20
	0	6	72	4	82

REMARKS (6 hour total):

	N-LEG	S-LEG	E-LEG	W-LEG	TOTAL
- Wheelchair/special needs assistance	0	1	0	0	1
- Skateboard/scooter	0	5	0	0	5

N: North, **S**: South, **E**: East, **W**: West, **I/S**: Intersection

Source: LADOT 2015 CMP

Counts Unlimited
PO Box 1178
Corona, CA 92878
(951) 268-6268

City of Culver City
N/S: Jefferson Boulevard
E/W: I-405 Northbound Ramps
Weather: Clear

File Name : 03_CVC_Jefferson_405N AM
Site Code : 16618886
Start Date : 11/28/2018
Page No : 1

Groups Printed- Passenger Vehicles - Dual Wheeled - Buses

	Jefferson Boulevard Southbound				I-405 Northbound Off Ramp Westbound				Jefferson Boulevard Northbound				I-405 Northbound On Ramp Eastbound				
Start Time	Left	Thru	Right	App. Total	Left	Thru	Right	App. Total	Left	Thru	Right	App. Total	Left	Thru	Right	App. Total	Int. Total
07:00 AM	0	165	38	203	33	70	75	178	129	108	0	237	0	0	0	0	618
07:15 AM	0	159	30	189	40	64	68	172	165	125	0	290	0	0	0	0	651
07:30 AM	0	201	29	230	32	52	94	178	121	156	0	277	0	0	0	0	685
07:45 AM	0	208	33	241	50	65	121	236	143	178	0	321	0	0	0	0	798
Total	0	733	130	863	155	251	358	764	558	567	0	1125	0	0	0	0	2752
08:00 AM	0	213	37	250	51	62	101	214	134	200	0	334	0	0	0	0	798
08:15 AM	0	228	34	262	40	74	80	194	151	168	0	319	0	0	0	0	775
08:30 AM	0	233	32	265	54	64	86	204	111	179	0	290	0	0	0	0	759
08:45 AM	0	235	35	270	56	66	88	210	96	165	0	261	0	0	0	0	741
Total	0	909	138	1047	201	266	355	822	492	712	0	1204	0	0	0	0	3073
09:00 AM	0	262	31	293	51	64	72	187	109	166	0	275	0	0	0	0	755
09:15 AM	0	213	24	237	45	70	69	184	72	186	0	258	0	0	0	0	679
09:30 AM	0	201	27	228	49	52	60	161	92	138	0	230	0	0	0	0	619
09:45 AM	0	204	28	232	43	42	43	128	51	185	0	236	0	0	0	0	596
Total	0	880	110	990	188	228	244	660	324	675	0	999	0	0	0	0	2649
Grand Total	0	2522	378	2900	544	745	957	2246	1374	1954	0	3328	0	0	0	0	8474
Apprch %	0	87	13		24.2	33.2	42.6		41.3	58.7	0		0	0	0		
Total %	0	29.8	4.5	34.2	6.4	8.8	11.3	26.5	16.2	23.1	0	39.3	0	0	0	0	
Passenger Vehicles	0	2434	360	2794	524	730	932	2186	1327	1883	0	3210	0	0	0	0	8190
% Passenger Vehicles	0	96.5	95.2	96.3	96.3	98	97.4	97.3	96.6	96.4	0	96.5	0	0	0	0	96.6
Dual Wheeled	0	55	17	72	20	11	24	55	41	27	0	68	0	0	0	0	195
% Dual Wheeled	0	2.2	4.5	2.5	3.7	1.5	2.5	2.4	3	1.4	0	2	0	0	0	0	2.3
Buses	0	33	1	34	0	4	1	5	6	44	0	50	0	0	0	0	89
% Buses	0	1.3	0.3	1.2	0	0.5	0.1	0.2	0.4	2.3	0	1.5	0	0	0	0	1.1

	Jefferson Boulevard Southbound				I-405 Northbound Off Ramp Westbound				Jefferson Boulevard Northbound				I-405 Northbound On Ramp Eastbound				
Start Time	Left	Thru	Right	App. Total	Left	Thru	Right	App. Total	Left	Thru	Right	App. Total	Left	Thru	Right	App. Total	Int. Total
Peak Hour Analysis From 07:00 AM to 09:45 AM - Peak 1 of 1																	
Peak Hour for Entire Intersection Begins at 07:45 AM																	
07:45 AM	0	208	33	241	50	65	**121**	**236**	143	178	0	321	0	0	0	0	**798**
08:00 AM	0	213	**37**	250	51	62	101	214	134	**200**	0	**334**	0	0	0	0	798
08:15 AM	0	228	34	262	40	**74**	80	194	**151**	168	0	319	0	0	0	0	775
08:30 AM	0	**233**	32	**265**	**54**	64	86	204	111	179	0	290	0	0	0	0	759
Total Volume	0	882	136	1018	195	265	388	848	539	725	0	1264	0	0	0	0	3130
% App. Total	0	86.6	13.4		23	31.2	45.8		42.6	57.4	0		0	0	0		
PHF	.000	.946	.919	.960	.903	.895	.802	.898	.892	.906	.000	.946	.000	.000	.000	.000	.981

Counts Unlimited
PO Box 1178
Corona, CA 92878
(951) 268-6268

City of Culver City
N/S: Jefferson Boulevard
E/W: I-405 Northbound Ramps
Weather: Clear

File Name : 03_CVC_Jefferson_405N AM
Site Code : 16618886
Start Date : 11/28/2018
Page No : 2

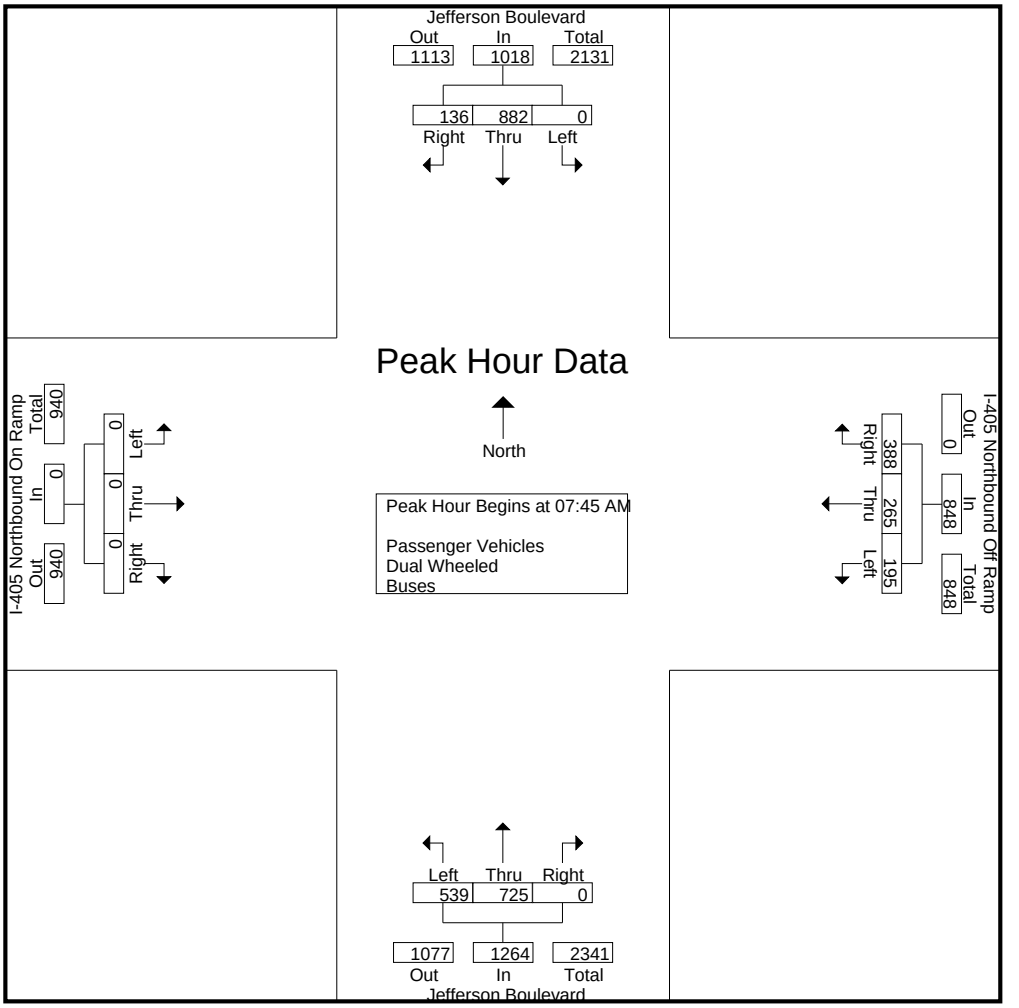

Peak Hour Analysis From 07:00 AM to 09:45 AM - Peak 1 of 1
Peak Hour for Each Approach Begins at:

	08:15 AM				07:45 AM				07:45 AM				07:00 AM			
+0 mins.	0	228	34	262	50	65	**121**	**236**	143	178	0	321	0	0	0	0
+15 mins.	0	233	32	265	51	62	101	214	134	**200**	0	**334**	0	0	0	0
+30 mins.	0	235	**35**	270	40	**74**	80	194	**151**	168	0	319	0	0	0	0
+45 mins.	0	**262**	31	**293**	**54**	64	86	204	111	179	0	290	0	0	0	0
Total Volume	0	958	132	1090	195	265	388	848	539	725	0	1264	0	0	0	0
% App. Total	0	87.9	12.1		23	31.2	45.8		42.6	57.4	0		0	0	0	
PHF	.000	.914	.943	.930	.903	.895	.802	.898	.892	.906	.000	.946	.000	.000	.000	.000

Counts Unlimited
PO Box 1178
Corona, CA 92878
(951) 268-6268

City of Culver City
N/S: Jefferson Boulevard
E/W: I-405 Northbound Ramps
Weather: Clear

File Name : 03_CVC_Jefferson_405N AM
Site Code : 16618886
Start Date : 11/28/2018
Page No : 1

Groups Printed- Passenger Vehicles

	Jefferson Boulevard Southbound				I-405 Northbound Off Ramp Westbound				Jefferson Boulevard Northbound				I-405 Northbound On Ramp Eastbound				
Start Time	Left	Thru	Right	App. Total	Left	Thru	Right	App. Total	Left	Thru	Right	App. Total	Left	Thru	Right	App. Total	Int. Total
07:00 AM	0	154	37	191	32	65	73	170	127	103	0	230	0	0	0	0	591
07:15 AM	0	155	28	183	40	62	65	167	163	118	0	281	0	0	0	0	631
07:30 AM	0	197	29	226	29	50	89	168	114	146	0	260	0	0	0	0	654
07:45 AM	0	205	29	234	48	63	119	230	137	172	0	309	0	0	0	0	773
Total	0	711	123	834	149	240	346	735	541	539	0	1080	0	0	0	0	2649
08:00 AM	0	206	36	242	50	62	99	211	130	197	0	327	0	0	0	0	780
08:15 AM	0	216	34	250	38	73	78	189	147	159	0	306	0	0	0	0	745
08:30 AM	0	224	28	252	51	64	84	199	110	174	0	284	0	0	0	0	735
08:45 AM	0	227	33	260	56	66	87	209	92	160	0	252	0	0	0	0	721
Total	0	873	131	1004	195	265	348	808	479	690	0	1169	0	0	0	0	2981
09:00 AM	0	251	30	281	45	63	70	178	103	159	0	262	0	0	0	0	721
09:15 AM	0	207	23	230	45	70	69	184	67	181	0	248	0	0	0	0	662
09:30 AM	0	193	27	220	47	51	59	157	90	133	0	223	0	0	0	0	600
09:45 AM	0	199	26	225	43	41	40	124	47	181	0	228	0	0	0	0	577
Total	0	850	106	956	180	225	238	643	307	654	0	961	0	0	0	0	2560
Grand Total	0	2434	360	2794	524	730	932	2186	1327	1883	0	3210	0	0	0	0	8190
Apprch %	0	87.1	12.9		24	33.4	42.6		41.3	58.7	0		0	0	0		
Total %	0	29.7	4.4	34.1	6.4	8.9	11.4	26.7	16.2	23	0	39.2	0	0	0	0	

	Jefferson Boulevard Southbound				I-405 Northbound Off Ramp Westbound				Jefferson Boulevard Northbound				I-405 Northbound On Ramp Eastbound				
Start Time	Left	Thru	Right	App. Total	Left	Thru	Right	App. Total	Left	Thru	Right	App. Total	Left	Thru	Right	App. Total	Int. Total
Peak Hour Analysis From 07:45 AM to 08:30 AM - Peak 1 of 1																	
Peak Hour for Entire Intersection Begins at 07:45 AM																	
07:45 AM	0	205	29	234	48	63	**119**	**230**	137	172	0	309	0	0	0	0	773
08:00 AM	0	206	**36**	242	50	62	99	211	130	**197**	0	**327**	0	0	0	0	**780**
08:15 AM	0	216	34	250	38	**73**	78	189	**147**	159	0	306	0	0	0	0	745
08:30 AM	0	**224**	28	**252**	**51**	64	84	199	110	174	0	284	0	0	0	0	735
Total Volume	0	851	127	978	187	262	380	829	524	702	0	1226	0	0	0	0	3033
% App. Total	0	87	13		22.6	31.6	45.8		42.7	57.3	0		0	0	0		
PHF	.000	.950	.882	.970	.917	.897	.798	.901	.891	.891	.000	.937	.000	.000	.000	.000	.972

Counts Unlimited
PO Box 1178
Corona, CA 92878
(951) 268-6268

City of Culver City
N/S: Jefferson Boulevard
E/W: I-405 Northbound Ramps
Weather: Clear

File Name : 03_CVC_Jefferson_405N AM
Site Code : 16618886
Start Date : 11/28/2018
Page No : 2

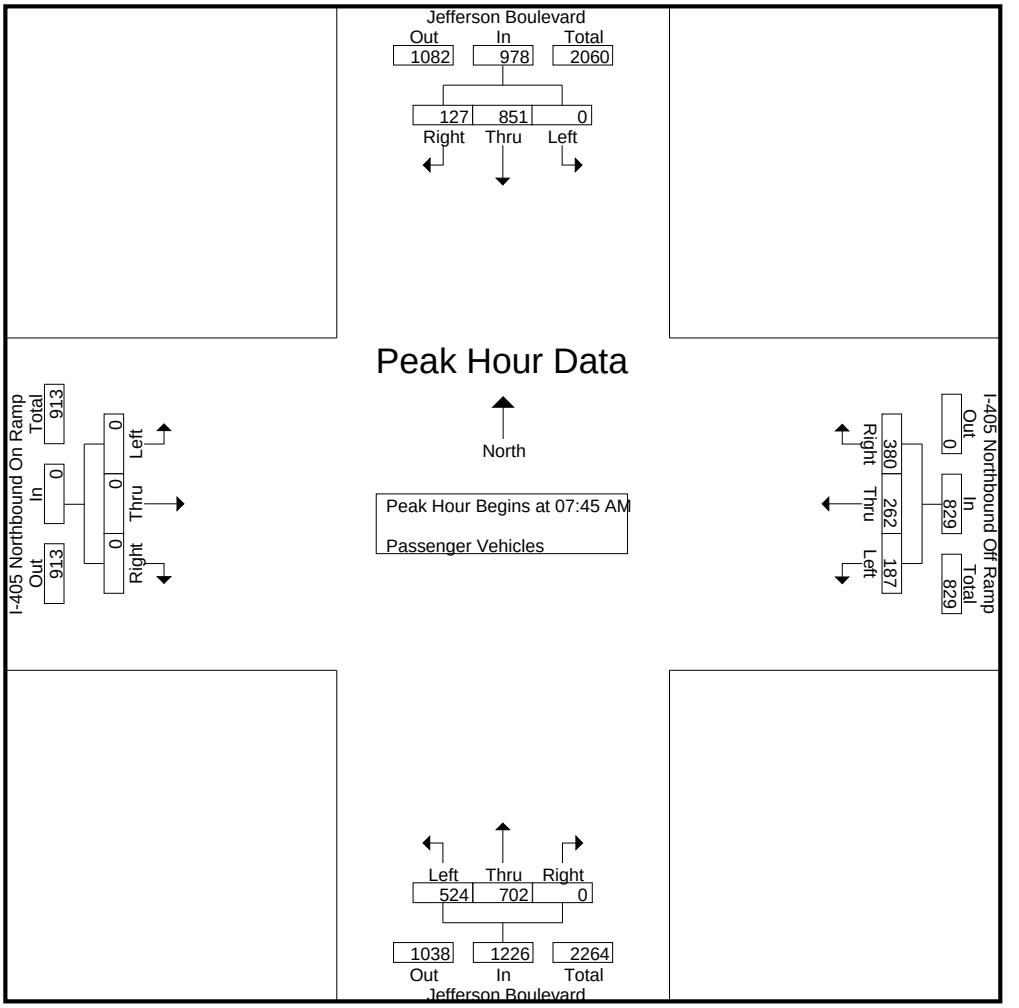

Peak Hour Analysis From 07:45 AM to 08:30 AM - Peak 1 of 1
Peak Hour for Each Approach Begins at:

	07:45 AM				07:45 AM				07:45 AM				07:45 AM			
+0 mins.	0	205	29	234	48	63	**119**	**230**	137	172	0	309	0	0	0	0
+15 mins.	0	206	**36**	242	50	62	99	211	130	**197**	0	**327**	0	0	0	0
+30 mins.	0	216	34	250	38	**73**	78	189	**147**	159	0	306	0	0	0	0
+45 mins.	0	**224**	28	**252**	**51**	64	84	199	110	174	0	284	0	0	0	0
Total Volume	0	851	127	978	187	262	380	829	524	702	0	1226	0	0	0	0
% App. Total	0	87	13		22.6	31.6	45.8		42.7	57.3	0		0	0	0	
PHF	.000	.950	.882	.970	.917	.897	.798	.901	.891	.891	.000	.937	.000	.000	.000	.000

Counts Unlimited
PO Box 1178
Corona, CA 92878
(951) 268-6268

City of Culver City
N/S: Jefferson Boulevard
E/W: I-405 Northbound Ramps
Weather: Clear

File Name : 03_CVC_Jefferson_405N AM
Site Code : 16618886
Start Date : 11/28/2018
Page No : 1

Groups Printed- Dual Wheeled

	Jefferson Boulevard Southbound				I-405 Northbound Off Ramp Westbound				Jefferson Boulevard Northbound				I-405 Northbound On Ramp Eastbound				
Start Time	Left	Thru	Right	App. Total	Left	Thru	Right	App. Total	Left	Thru	Right	App. Total	Left	Thru	Right	App. Total	Int. Total
07:00 AM	0	6	1	7	1	2	1	4	1	0	0	1	0	0	0	0	12
07:15 AM	0	2	1	3	0	1	3	4	1	5	0	6	0	0	0	0	13
07:30 AM	0	3	0	3	3	2	5	10	6	3	0	9	0	0	0	0	22
07:45 AM	0	1	4	5	2	2	2	6	6	3	0	9	0	0	0	0	20
Total	0	12	6	18	6	7	11	24	14	11	0	25	0	0	0	0	67
08:00 AM	0	5	1	6	1	0	2	3	4	1	0	5	0	0	0	0	14
08:15 AM	0	7	0	7	2	1	2	5	3	5	0	8	0	0	0	0	20
08:30 AM	0	5	4	9	3	0	2	5	1	3	0	4	0	0	0	0	18
08:45 AM	0	7	2	9	0	0	1	1	4	1	0	5	0	0	0	0	15
Total	0	24	7	31	6	1	7	14	12	10	0	22	0	0	0	0	67
09:00 AM	0	5	1	6	6	1	2	9	6	3	0	9	0	0	0	0	24
09:15 AM	0	6	1	7	0	0	0	0	3	2	0	5	0	0	0	0	12
09:30 AM	0	4	0	4	2	1	1	4	2	1	0	3	0	0	0	0	11
09:45 AM	0	4	2	6	0	1	3	4	4	0	0	4	0	0	0	0	14
Total	0	19	4	23	8	3	6	17	15	6	0	21	0	0	0	0	61
Grand Total	0	55	17	72	20	11	24	55	41	27	0	68	0	0	0	0	195
Apprch %	0	76.4	23.6		36.4	20	43.6		60.3	39.7	0		0	0	0		
Total %	0	28.2	8.7	36.9	10.3	5.6	12.3	28.2	21	13.8	0	34.9	0	0	0	0	

	Jefferson Boulevard Southbound				I-405 Northbound Off Ramp Westbound				Jefferson Boulevard Northbound				I-405 Northbound On Ramp Eastbound				
Start Time	Left	Thru	Right	App. Total	Left	Thru	Right	App. Total	Left	Thru	Right	App. Total	Left	Thru	Right	App. Total	Int. Total
Peak Hour Analysis From 07:45 AM to 08:30 AM - Peak 1 of 1																	
Peak Hour for Entire Intersection Begins at 07:45 AM																	
07:45 AM	0	1	**4**	5	2	**2**	**2**	**6**	**6**	3	0	**9**	0	0	0	0	**20**
08:00 AM	0	5	1	6	1	0	2	3	4	1	0	5	0	0	0	0	14
08:15 AM	0	**7**	0	7	2	1	2	5	3	**5**	0	8	0	0	0	0	20
08:30 AM	0	5	4	**9**	**3**	0	2	5	1	3	0	4	0	0	0	0	18
Total Volume	0	18	9	27	8	3	8	19	14	12	0	26	0	0	0	0	72
% App. Total	0	66.7	33.3		42.1	15.8	42.1		53.8	46.2	0		0	0	0		
PHF	.000	.643	.563	.750	.667	.375	1.00	.792	.583	.600	.000	.722	.000	.000	.000	.000	.900

Counts Unlimited
PO Box 1178
Corona, CA 92878
(951) 268-6268

City of Culver City
N/S: Jefferson Boulevard
E/W: I-405 Northbound Ramps
Weather: Clear

File Name : 03_CVC_Jefferson_405N AM
Site Code : 16618886
Start Date : 11/28/2018
Page No : 2

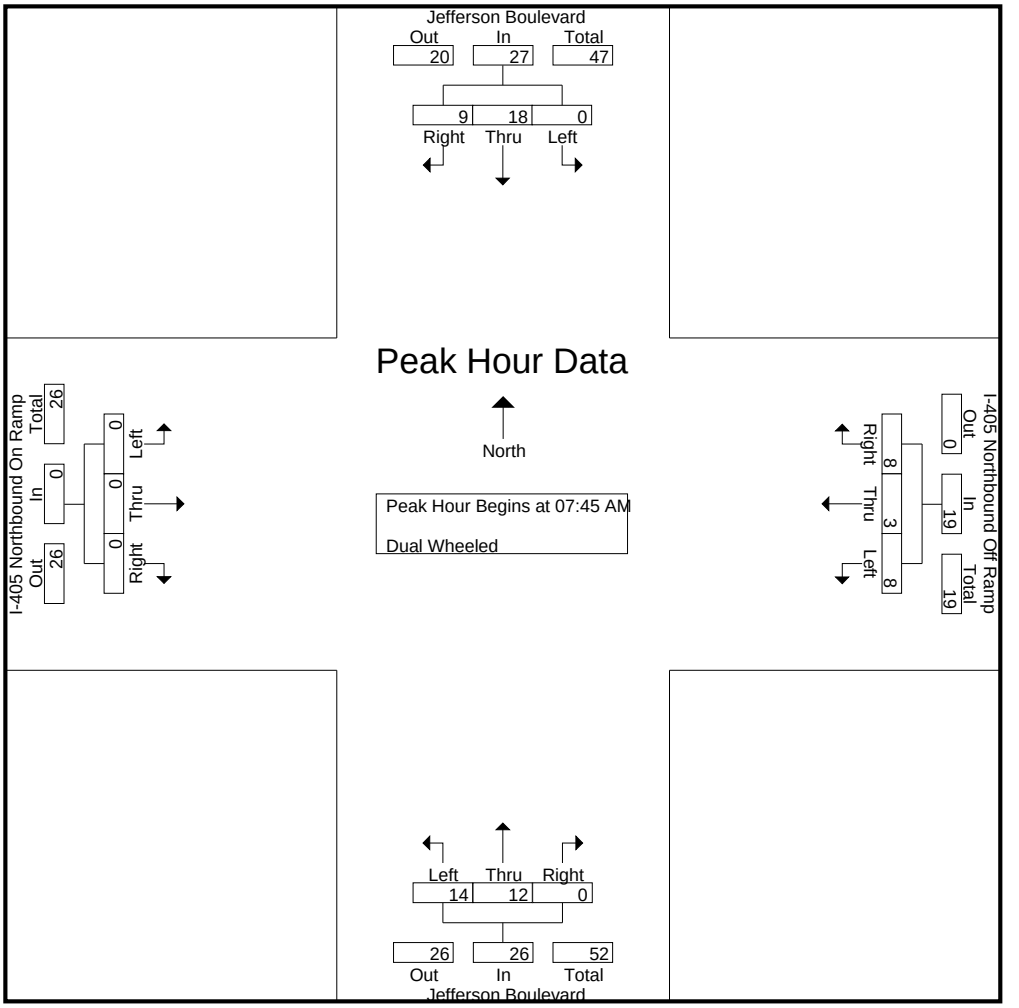

Peak Hour Analysis From 07:45 AM to 08:30 AM - Peak 1 of 1
Peak Hour for Each Approach Begins at:

	07:45 AM				07:45 AM				07:45 AM				07:45 AM			
+0 mins.	0	1	**4**	5	2	**2**	**2**	**6**	**6**	3	0	**9**	0	0	0	0
+15 mins.	0	5	1	6	1	0	2	3	4	1	0	5	0	0	0	0
+30 mins.	0	**7**	0	7	2	1	2	5	3	**5**	0	8	0	0	0	0
+45 mins.	0	5	4	**9**	**3**	0	2	5	1	3	0	4	0	0	0	0
Total Volume	0	18	9	27	8	3	8	19	14	12	0	26	0	0	0	0
% App. Total	0	66.7	33.3		42.1	15.8	42.1		53.8	46.2	0		0	0	0	
PHF	.000	.643	.563	.750	.667	.375	1.000	.792	.583	.600	.000	.722	.000	.000	.000	.000

Counts Unlimited
PO Box 1178
Corona, CA 92878
(951) 268-6268

City of Culver City
N/S: Jefferson Boulevard
E/W: I-405 Northbound Ramps
Weather: Clear

File Name : 03_CVC_Jefferson_405N AM
Site Code : 16618886
Start Date : 11/28/2018
Page No : 1

Groups Printed- Buses

	Jefferson Boulevard Southbound				I-405 Northbound Off Ramp Westbound				Jefferson Boulevard Northbound				I-405 Northbound On Ramp Eastbound				
Start Time	Left	Thru	Right	App. Total	Left	Thru	Right	App. Total	Left	Thru	Right	App. Total	Left	Thru	Right	App. Total	Int. Total
07:00 AM	0	5	0	5	0	3	1	4	1	5	0	6	0	0	0	0	15
07:15 AM	0	2	1	3	0	1	0	1	1	2	0	3	0	0	0	0	7
07:30 AM	0	1	0	1	0	0	0	0	1	7	0	8	0	0	0	0	9
07:45 AM	0	2	0	2	0	0	0	0	0	3	0	3	0	0	0	0	5
Total	0	10	1	11	0	4	1	5	3	17	0	20	0	0	0	0	36
08:00 AM	0	2	0	2	0	0	0	0	0	2	0	2	0	0	0	0	4
08:15 AM	0	5	0	5	0	0	0	0	1	4	0	5	0	0	0	0	10
08:30 AM	0	4	0	4	0	0	0	0	0	2	0	2	0	0	0	0	6
08:45 AM	0	1	0	1	0	0	0	0	0	4	0	4	0	0	0	0	5
Total	0	12	0	12	0	0	0	0	1	12	0	13	0	0	0	0	25
09:00 AM	0	6	0	6	0	0	0	0	0	4	0	4	0	0	0	0	10
09:15 AM	0	0	0	0	0	0	0	0	2	3	0	5	0	0	0	0	5
09:30 AM	0	4	0	4	0	0	0	0	0	4	0	4	0	0	0	0	8
09:45 AM	0	1	0	1	0	0	0	0	0	4	0	4	0	0	0	0	5
Total	0	11	0	11	0	0	0	0	2	15	0	17	0	0	0	0	28
Grand Total	0	33	1	34	0	4	1	5	6	44	0	50	0	0	0	0	89
Apprch %	0	97.1	2.9		0	80	20		12	88	0		0	0	0		
Total %	0	37.1	1.1	38.2	0	4.5	1.1	5.6	6.7	49.4	0	56.2	0	0	0	0	

	Jefferson Boulevard Southbound				I-405 Northbound Off Ramp Westbound				Jefferson Boulevard Northbound				I-405 Northbound On Ramp Eastbound				
Start Time	Left	Thru	Right	App. Total	Left	Thru	Right	App. Total	Left	Thru	Right	App. Total	Left	Thru	Right	App. Total	Int. Total
Peak Hour Analysis From 07:45 AM to 08:30 AM - Peak 1 of 1																	
Peak Hour for Entire Intersection Begins at 07:45 AM																	
07:45 AM	0	2	0	2	0	0	0	0	0	3	0	3	0	0	0	0	5
08:00 AM	0	2	0	2	0	0	0	0	0	2	0	2	0	0	0	0	4
08:15 AM	0	**5**	0	**5**	0	0	0	0	**1**	**4**	0	**5**	0	0	0	0	**10**
08:30 AM	0	4	0	4	0	0	0	0	0	2	0	2	0	0	0	0	6
Total Volume	0	13	0	13	0	0	0	0	1	11	0	12	0	0	0	0	25
% App. Total	0	100	0		0	0	0		8.3	91.7	0		0	0	0		
PHF	.000	.650	.000	.650	.000	.000	.000	.000	.250	.688	.000	.600	.000	.000	.000	.000	.625

Counts Unlimited
PO Box 1178
Corona, CA 92878
(951) 268-6268

City of Culver City
N/S: Jefferson Boulevard
E/W: I-405 Northbound Ramps
Weather: Clear

File Name : 03_CVC_Jefferson_405N AM
Site Code : 16618886
Start Date : 11/28/2018
Page No : 2

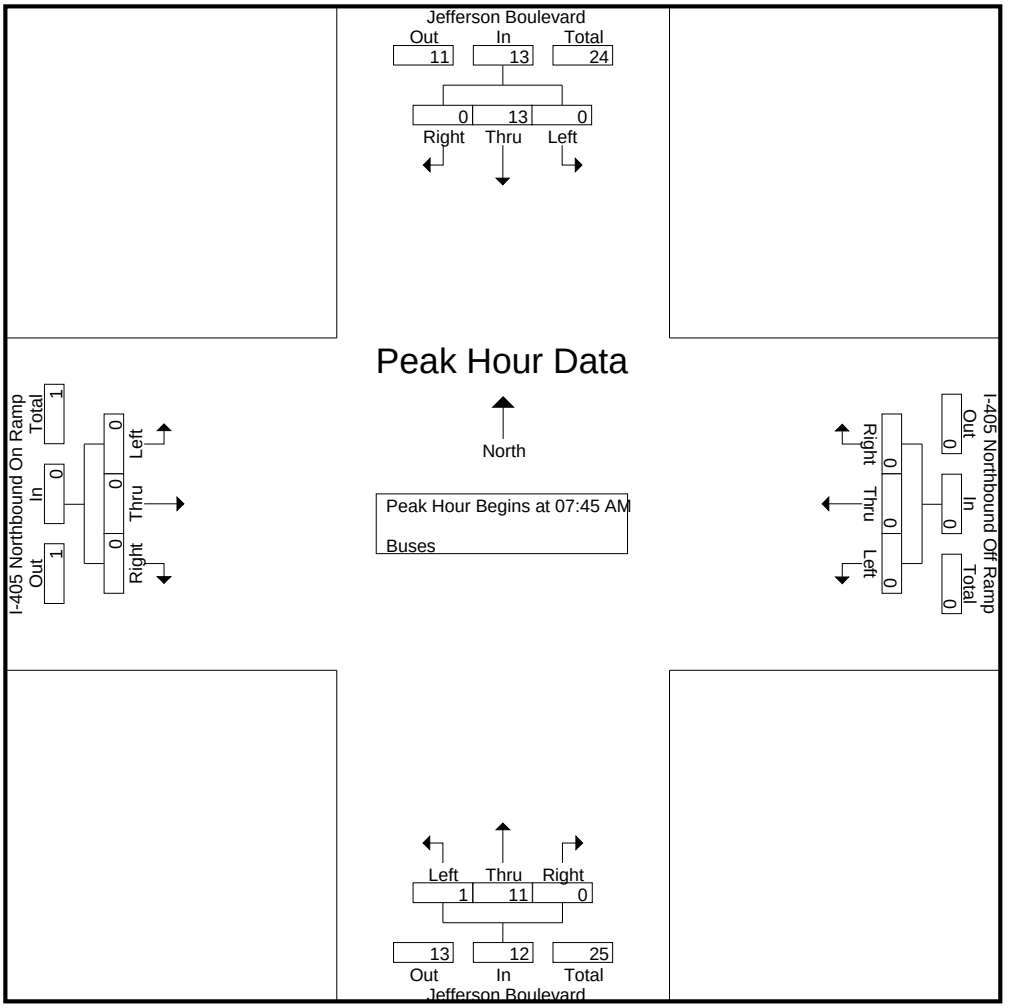

Peak Hour Analysis From 07:45 AM to 08:30 AM - Peak 1 of 1
Peak Hour for Each Approach Begins at:

	07:45 AM				07:45 AM				07:45 AM				07:45 AM			
+0 mins.	0	2	0	2	0	0	0	0	0	3	0	3	0	0	0	0
+15 mins.	0	2	0	2	0	0	0	0	0	2	0	2	0	0	0	0
+30 mins.	0	**5**	0	**5**	0	0	0	0	**1**	**4**	0	**5**	0	0	0	0
+45 mins.	0	4	0	4	0	0	0	0	0	2	0	2	0	0	0	0
Total Volume	0	13	0	13	0	0	0	0	1	11	0	12	0	0	0	0
% App. Total	0	100	0		0	0	0		8.3	91.7	0		0	0	0	
PHF	.000	.650	.000	.650	.000	.000	.000	.000	.250	.688	.000	.600	.000	.000	.000	.000

Counts Unlimited
PO Box 1178
Corona, CA 92878
(951) 268-6268

City of Culver City
N/S: Jefferson Boulevard
E/W: I-405 Northbound Ramps
Weather: Clear

File Name : 03_CVC_Jefferson_405N PM
Site Code : 16618886
Start Date : 11/28/2018

Groups Printed- Passenger Vehicles - Dual Wheeled - Buses

	Jefferson Boulevard Southbound				I-405 Northbound Off Ramp Westbound				Jefferson Boulevard Northbound				I-405 Northbound On Ramp Eastbound				
Start Time	Left	Thru	Right	App. Total	Left	Thru	Right	App. Total	Left	Thru	Right	App. Total	Left	Thru	Right	App. Total	Int. Total
03:00 PM	0	232	31	263	52	4	61	117	68	217	0	285	0	0	0	0	665
03:15 PM	0	244	33	277	56	2	66	124	90	193	0	283	0	0	0	0	684
03:30 PM	0	255	25	280	72	4	65	141	70	221	0	291	0	0	0	0	712
03:45 PM	0	254	21	275	92	0	81	173	69	233	0	302	0	0	0	0	750
Total	0	985	110	1095	272	10	273	555	297	864	0	1161	0	0	0	0	2811
04:00 PM	0	292	30	322	75	1	67	143	76	205	0	281	0	0	0	0	746
04:15 PM	0	289	36	325	93	1	78	172	79	199	0	278	0	0	0	0	775
04:30 PM	0	263	22	285	96	1	81	178	71	193	0	264	0	0	0	0	727
04:45 PM	0	238	21	259	111	0	103	214	87	209	0	296	0	0	0	0	769
Total	0	1082	109	1191	375	3	329	707	313	806	0	1119	0	0	0	0	3017
05:00 PM	0	292	23	315	95	1	102	198	70	215	0	285	0	0	0	0	798
05:15 PM	0	232	25	257	74	3	90	167	82	199	0	281	0	0	0	0	705
05:30 PM	0	261	20	281	98	1	112	211	75	211	0	286	0	0	0	0	778
05:45 PM	0	253	26	279	99	2	110	211	69	176	0	245	0	0	0	0	735
Total	0	1038	94	1132	366	7	414	787	296	801	0	1097	0	0	0	0	3016
Grand Total	0	3105	313	3418	1013	20	1016	2049	906	2471	0	3377	0	0	0	0	8844
Apprch %	0	90.8	9.2		49.4	1	49.6		26.8	73.2	0		0	0	0		
Total %	0	35.1	3.5	38.6	11.5	0.2	11.5	23.2	10.2	27.9	0	38.2	0	0	0	0	
Passenger Vehicles	0	3028	305	3333	1000	20	1009	2029	885	2403	0	3288	0	0	0	0	8650
% Passenger Vehicles	0	97.5	97.4	97.5	98.7	100	99.3	99	97.7	97.2	0	97.4	0	0	0	0	97.8
Dual Wheeled	0	48	7	55	12	0	6	18	18	26	0	44	0	0	0	0	117
% Dual Wheeled	0	1.5	2.2	1.6	1.2	0	0.6	0.9	2	1.1	0	1.3	0	0	0	0	1.3
Buses	0	29	1	30	1	0	1	2	3	42	0	45	0	0	0	0	77
% Buses	0	0.9	0.3	0.9	0.1	0	0.1	0.1	0.3	1.7	0	1.3	0	0	0	0	0.9

	Jefferson Boulevard Southbound				I-405 Northbound Off Ramp Westbound				Jefferson Boulevard Northbound				I-405 Northbound On Ramp Eastbound				
Start Time	Left	Thru	Right	App. Total	Left	Thru	Right	App. Total	Left	Thru	Right	App. Total	Left	Thru	Right	App. Total	Int. Total
Peak Hour Analysis From 03:00 PM to 05:45 PM - Peak 1 of 1																	
Peak Hour for Entire Intersection Begins at 04:15 PM																	
04:15 PM	0	289	**36**	**325**	93	**1**	78	172	79	199	0	278	0	0	0	0	775
04:30 PM	0	263	22	285	96	1	81	178	71	193	0	264	0	0	0	0	727
04:45 PM	0	238	21	259	**111**	0	**103**	**214**	**87**	209	0	**296**	0	0	0	0	769
05:00 PM	0	**292**	23	315	95	1	102	198	70	**215**	0	285	0	0	0	0	**798**
Total Volume	0	1082	102	1184	395	3	364	762	307	816	0	1123	0	0	0	0	3069
% App. Total	0	91.4	8.6		51.8	0.4	47.8		27.3	72.7	0		0	0	0		
PHF	.000	.926	.708	.911	.890	.750	.883	.890	.882	.949	.000	.948	.000	.000	.000	.000	.961

Counts Unlimited
PO Box 1178
Corona, CA 92878
(951) 268-6268

City of Culver City
N/S: Jefferson Boulevard
E/W: I-405 Northbound Ramps
Weather: Clear

File Name : 03_CVC_Jefferson_405N PM
Site Code : 16618886
Start Date : 11/28/2018
Page No : 2

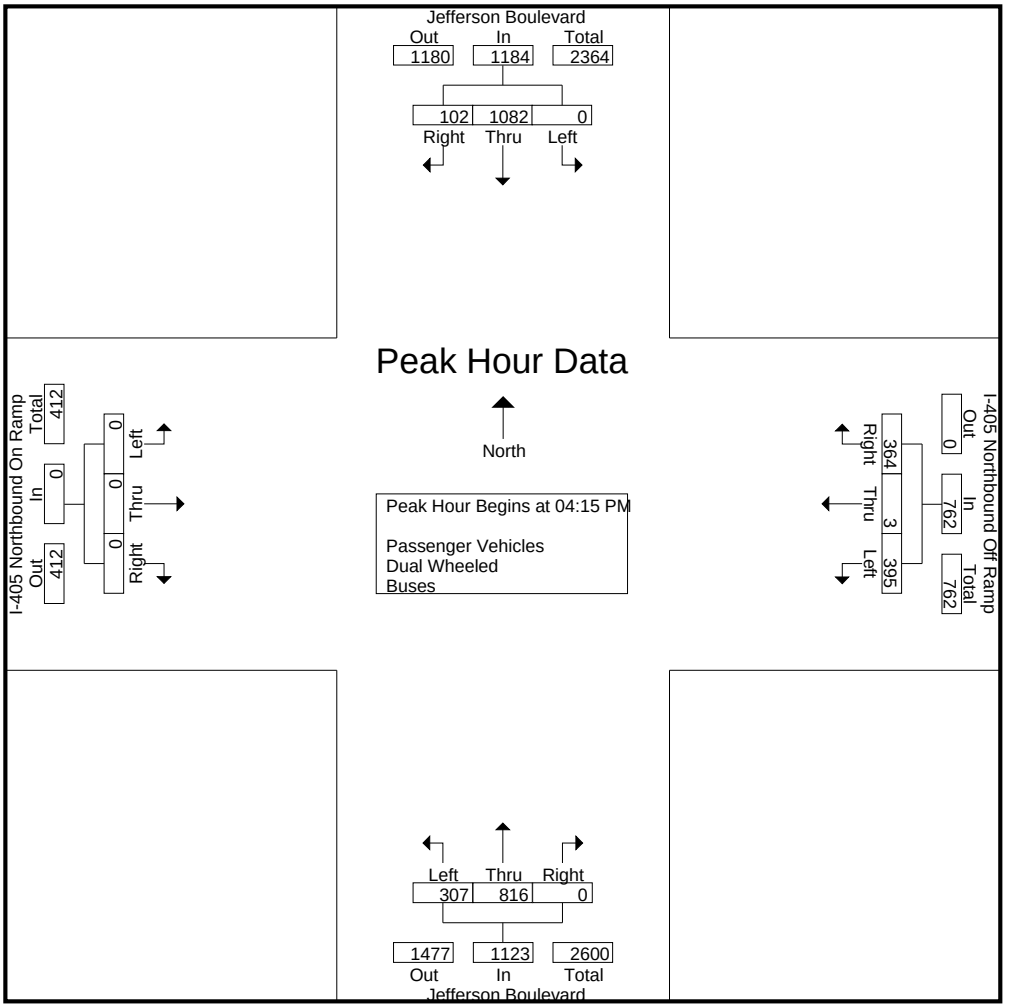

Peak Hour Analysis From 03:00 PM to 05:45 PM - Peak 1 of 1
Peak Hour for Each Approach Begins at:

	03:45 PM				04:45 PM				03:00 PM				03:00 PM			
+0 mins.	0	254	21	275	**111**	0	103	**214**	68	217	0	285	0	0	0	0
+15 mins.	0	**292**	30	322	95	1	102	198	**90**	193	0	283	0	0	0	0
+30 mins.	0	289	**36**	**325**	74	**3**	90	167	70	221	0	291	0	0	0	0
+45 mins.	0	263	22	285	98	1	**112**	211	69	**233**	0	**302**	0	0	0	0
Total Volume	0	1098	109	1207	378	5	407	790	297	864	0	1161	0	0	0	0
% App. Total	0	91	9		47.8	0.6	51.5		25.6	74.4	0		0	0	0	
PHF	.000	.940	.757	.928	.851	.417	.908	.923	.825	.927	.000	.961	.000	.000	.000	.000

Counts Unlimited
PO Box 1178
Corona, CA 92878
(951) 268-6268

City of Culver City
N/S: Jefferson Boulevard
E/W: I-405 Northbound Ramps
Weather: Clear

File Name : 03_CVC_Jefferson_405N PM
Site Code : 16618886
Start Date : 11/28/2018
Page No : 1

Groups Printed- Passenger Vehicles

	Jefferson Boulevard Southbound				I-405 Northbound Off Ramp Westbound				Jefferson Boulevard Northbound				I-405 Northbound On Ramp Eastbound				
Start Time	Left	Thru	Right	App. Total	Left	Thru	Right	App. Total	Left	Thru	Right	App. Total	Left	Thru	Right	App. Total	Int. Total
03:00 PM	0	224	31	255	52	4	61	117	66	213	0	279	0	0	0	0	651
03:15 PM	0	238	31	269	56	2	66	124	84	185	0	269	0	0	0	0	662
03:30 PM	0	248	25	273	70	4	63	137	68	215	0	283	0	0	0	0	693
03:45 PM	0	243	21	264	91	0	80	171	68	226	0	294	0	0	0	0	729
Total	0	953	108	1061	269	10	270	549	286	839	0	1125	0	0	0	0	2735
04:00 PM	0	286	29	315	72	1	66	139	74	202	0	276	0	0	0	0	730
04:15 PM	0	279	34	313	92	1	77	170	78	192	0	270	0	0	0	0	753
04:30 PM	0	258	19	277	93	1	81	175	68	185	0	253	0	0	0	0	705
04:45 PM	0	233	21	254	110	0	101	211	84	202	0	286	0	0	0	0	751
Total	0	1056	103	1159	367	3	325	695	304	781	0	1085	0	0	0	0	2939
05:00 PM	0	286	23	309	94	1	102	197	70	209	0	279	0	0	0	0	785
05:15 PM	0	226	25	251	73	3	90	166	81	195	0	276	0	0	0	0	693
05:30 PM	0	257	20	277	98	1	112	211	75	206	0	281	0	0	0	0	769
05:45 PM	0	250	26	276	99	2	110	211	69	173	0	242	0	0	0	0	729
Total	0	1019	94	1113	364	7	414	785	295	783	0	1078	0	0	0	0	2976
Grand Total	0	3028	305	3333	1000	20	1009	2029	885	2403	0	3288	0	0	0	0	8650
Apprch %	0	90.8	9.2		49.3	1	49.7		26.9	73.1	0		0	0	0		
Total %	0	35	3.5	38.5	11.6	0.2	11.7	23.5	10.2	27.8	0	38	0	0	0	0	

	Jefferson Boulevard Southbound				I-405 Northbound Off Ramp Westbound				Jefferson Boulevard Northbound				I-405 Northbound On Ramp Eastbound				
Start Time	Left	Thru	Right	App. Total	Left	Thru	Right	App. Total	Left	Thru	Right	App. Total	Left	Thru	Right	App. Total	Int. Total
Peak Hour Analysis From 04:15 PM to 05:00 PM - Peak 1 of 1																	
Peak Hour for Entire Intersection Begins at 04:15 PM																	
04:15 PM	0	279	**34**	**313**	92	**1**	77	170	78	192	0	270	0	0	0	0	753
04:30 PM	0	258	19	277	93	1	81	175	68	185	0	253	0	0	0	0	705
04:45 PM	0	233	21	254	**110**	0	101	**211**	**84**	202	0	**286**	0	0	0	0	751
05:00 PM	0	**286**	23	309	94	1	**102**	197	70	**209**	0	279	0	0	0	0	**785**
Total Volume	0	1056	97	1153	389	3	361	753	300	788	0	1088	0	0	0	0	2994
% App. Total	0	91.6	8.4		51.7	0.4	47.9		27.6	72.4	0		0	0	0		
PHF	.000	.923	.713	.921	.884	.750	.885	.892	.893	.943	.000	.951	.000	.000	.000	.000	.954

Counts Unlimited
PO Box 1178
Corona, CA 92878
(951) 268-6268

City of Culver City
N/S: Jefferson Boulevard
E/W: I-405 Northbound Ramps
Weather: Clear

File Name : 03_CVC_Jefferson_405N PM
Site Code : 16618886
Start Date : 11/28/2018

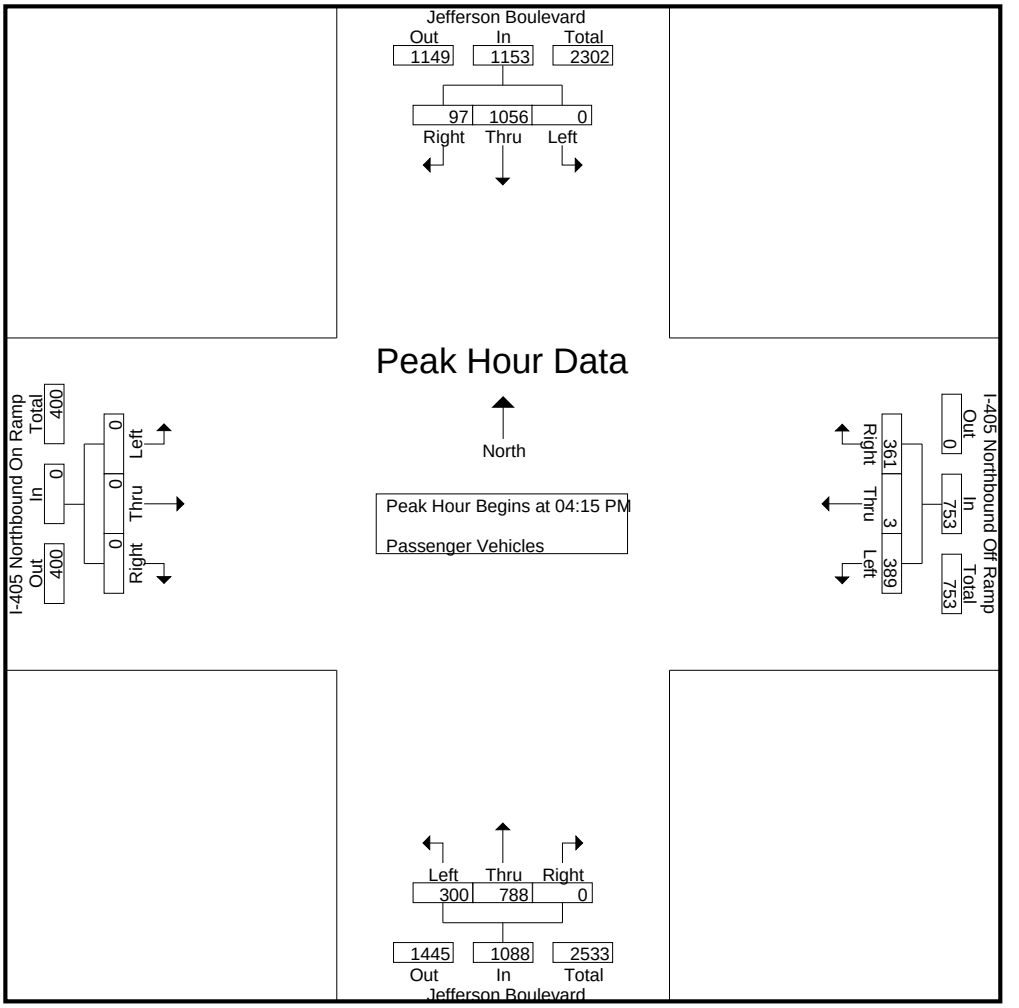

Peak Hour Analysis From 04:15 PM to 05:00 PM - Peak 1 of 1
Peak Hour for Each Approach Begins at:

	04:15 PM				04:15 PM				04:15 PM				04:15 PM			
+0 mins.	0	279	**34**	**313**	92	**1**	77	170	78	192	0	270	0	0	0	0
+15 mins.	0	258	19	277	93	1	81	175	68	185	0	253	0	0	0	0
+30 mins.	0	233	21	254	**110**	0	101	**211**	**84**	202	0	**286**	0	0	0	0
+45 mins.	0	**286**	23	309	94	1	**102**	197	70	**209**	0	279	0	0	0	0
Total Volume	0	1056	97	1153	389	3	361	753	300	788	0	1088	0	0	0	0
% App. Total	0	91.6	8.4		51.7	0.4	47.9		27.6	72.4	0		0	0	0	
PHF	.000	.923	.713	.921	.884	.750	.885	.892	.893	.943	.000	.951	.000	.000	.000	.000

Counts Unlimited
PO Box 1178
Corona, CA 92878
(951) 268-6268

City of Culver City
N/S: Jefferson Boulevard
E/W: I-405 Northbound Ramps
Weather: Clear

File Name : 03_CVC_Jefferson_405N PM
Site Code : 16618886
Start Date : 11/28/2018
Page No : 1

Groups Printed- Dual Wheeled

	Jefferson Boulevard Southbound				I-405 Northbound Off Ramp Westbound				Jefferson Boulevard Northbound				I-405 Northbound On Ramp Eastbound				
Start Time	Left	Thru	Right	App. Total	Left	Thru	Right	App. Total	Left	Thru	Right	App. Total	Left	Thru	Right	App. Total	Int. Total
03:00 PM	0	6	0	6	0	0	0	0	2	2	0	4	0	0	0	0	10
03:15 PM	0	3	2	5	0	0	0	0	6	6	0	12	0	0	0	0	17
03:30 PM	0	4	0	4	2	0	2	4	2	2	0	4	0	0	0	0	12
03:45 PM	0	8	0	8	1	0	1	2	1	1	0	2	0	0	0	0	12
Total	0	21	2	23	3	0	3	6	11	11	0	22	0	0	0	0	51
04:00 PM	0	3	1	4	2	0	1	3	2	0	0	2	0	0	0	0	9
04:15 PM	0	5	2	7	1	0	1	2	1	3	0	4	0	0	0	0	13
04:30 PM	0	4	2	6	3	0	0	3	3	2	0	5	0	0	0	0	14
04:45 PM	0	3	0	3	1	0	1	2	1	4	0	5	0	0	0	0	10
Total	0	15	5	20	7	0	3	10	7	9	0	16	0	0	0	0	46
05:00 PM	0	5	0	5	1	0	0	1	0	4	0	4	0	0	0	0	10
05:15 PM	0	3	0	3	1	0	0	1	0	0	0	0	0	0	0	0	4
05:30 PM	0	2	0	2	0	0	0	0	0	1	0	1	0	0	0	0	3
05:45 PM	0	2	0	2	0	0	0	0	0	1	0	1	0	0	0	0	3
Total	0	12	0	12	2	0	0	2	0	6	0	6	0	0	0	0	20
Grand Total	0	48	7	55	12	0	6	18	18	26	0	44	0	0	0	0	117
Apprch %	0	87.3	12.7		66.7	0	33.3		40.9	59.1	0		0	0	0		
Total %	0	41	6	47	10.3	0	5.1	15.4	15.4	22.2	0	37.6	0	0	0	0	

	Jefferson Boulevard Southbound				I-405 Northbound Off Ramp Westbound				Jefferson Boulevard Northbound				I-405 Northbound On Ramp Eastbound				
Start Time	Left	Thru	Right	App. Total	Left	Thru	Right	App. Total	Left	Thru	Right	App. Total	Left	Thru	Right	App. Total	Int. Total
Peak Hour Analysis From 04:15 PM to 05:00 PM - Peak 1 of 1																	
Peak Hour for Entire Intersection Begins at 04:15 PM																	
04:15 PM	0	**5**	**2**	**7**	1	0	**1**	2	1	3	0	4	0	0	0	0	13
04:30 PM	0	4	2	6	**3**	0	0	**3**	**3**	2	0	**5**	0	0	0	0	**14**
04:45 PM	0	3	0	3	1	0	1	2	1	**4**	0	5	0	0	0	0	10
05:00 PM	0	5	0	5	1	0	0	1	0	4	0	4	0	0	0	0	10
Total Volume	0	17	4	21	6	0	2	8	5	13	0	18	0	0	0	0	47
% App. Total	0	81	19		75	0	25		27.8	72.2	0		0	0	0		
PHF	.000	.850	.500	.750	.500	.000	.500	.667	.417	.813	.000	.900	.000	.000	.000	.000	.839

Counts Unlimited
PO Box 1178
Corona, CA 92878
(951) 268-6268

City of Culver City
N/S: Jefferson Boulevard
E/W: I-405 Northbound Ramps
Weather: Clear

File Name : 03_CVC_Jefferson_405N PM
Site Code : 16618886
Start Date : 11/28/2018
Page No : 2

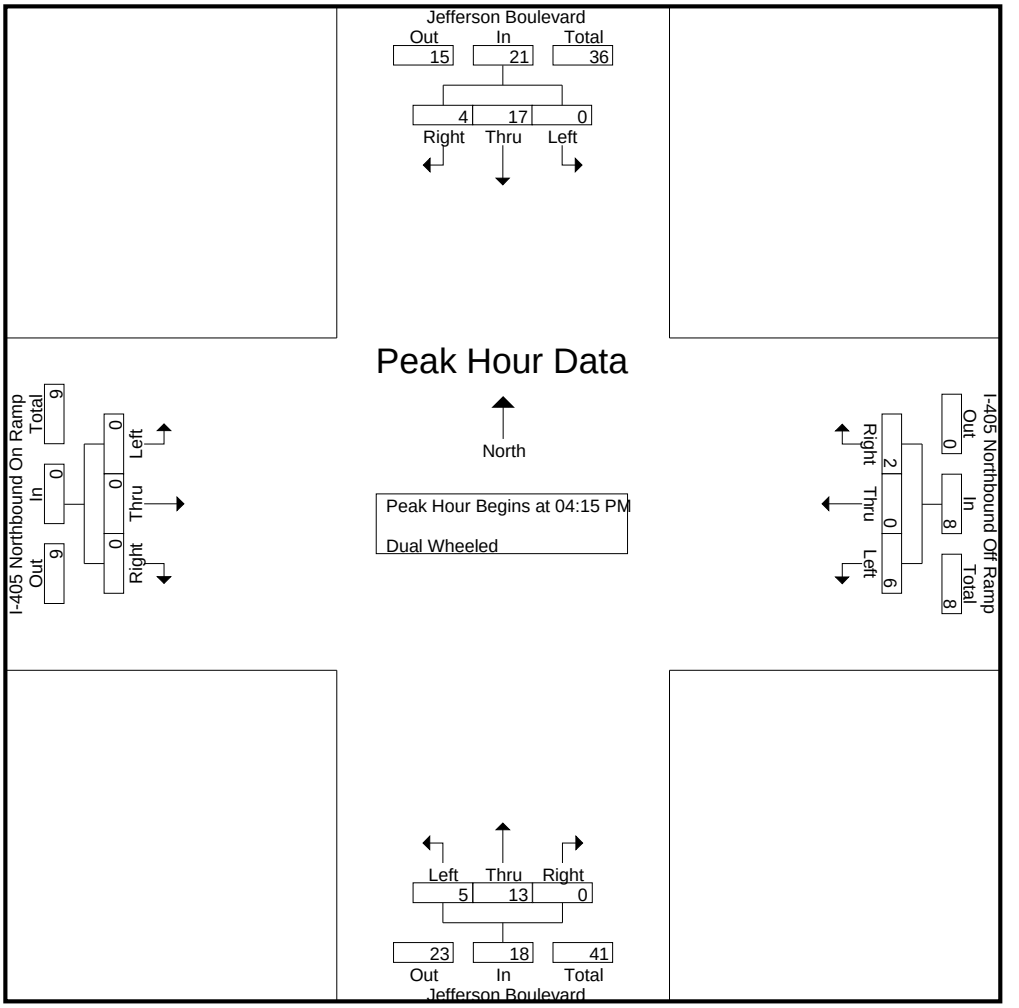

Peak Hour Analysis From 04:15 PM to 05:00 PM - Peak 1 of 1
Peak Hour for Each Approach Begins at:

	04:15 PM				04:15 PM				04:15 PM				04:15 PM			
+0 mins.	0	**5**	**2**	**7**	1	0	**1**	2	1	3	0	4	0	0	0	0
+15 mins.	0	4	2	6	**3**	0	0	**3**	**3**	2	0	**5**	0	0	0	0
+30 mins.	0	3	0	3	1	0	1	2	1	**4**	0	5	0	0	0	0
+45 mins.	0	5	0	5	1	0	0	1	0	4	0	4	0	0	0	0
Total Volume	0	17	4	21	6	0	2	8	5	13	0	18	0	0	0	0
% App. Total	0	81	19		75	0	25		27.8	72.2	0		0	0	0	
PHF	.000	.850	.500	.750	.500	.000	.500	.667	.417	.813	.000	.900	.000	.000	.000	.000

Counts Unlimited
PO Box 1178
Corona, CA 92878
(951) 268-6268

City of Culver City
N/S: Jefferson Boulevard
E/W: I-405 Northbound Ramps
Weather: Clear

File Name : 03_CVC_Jefferson_405N PM
Site Code : 16618886
Start Date : 11/28/2018
Page No : 1

Groups Printed- Buses

	Jefferson Boulevard Southbound				I-405 Northbound Off Ramp Westbound				Jefferson Boulevard Northbound				I-405 Northbound On Ramp Eastbound				
Start Time	Left	Thru	Right	App. Total	Left	Thru	Right	App. Total	Left	Thru	Right	App. Total	Left	Thru	Right	App. Total	Int. Total
03:00 PM	0	2	0	2	0	0	0	0	0	2	0	2	0	0	0	0	4
03:15 PM	0	3	0	3	0	0	0	0	0	2	0	2	0	0	0	0	5
03:30 PM	0	3	0	3	0	0	0	0	0	4	0	4	0	0	0	0	7
03:45 PM	0	3	0	3	0	0	0	0	0	6	0	6	0	0	0	0	9
Total	0	11	0	11	0	0	0	0	0	14	0	14	0	0	0	0	25
04:00 PM	0	3	0	3	1	0	0	1	0	3	0	3	0	0	0	0	7
04:15 PM	0	5	0	5	0	0	0	0	0	4	0	4	0	0	0	0	9
04:30 PM	0	1	1	2	0	0	0	0	0	6	0	6	0	0	0	0	8
04:45 PM	0	2	0	2	0	0	1	1	2	3	0	5	0	0	0	0	8
Total	0	11	1	12	1	0	1	2	2	16	0	18	0	0	0	0	32
05:00 PM	0	1	0	1	0	0	0	0	0	2	0	2	0	0	0	0	3
05:15 PM	0	3	0	3	0	0	0	0	1	4	0	5	0	0	0	0	8
05:30 PM	0	2	0	2	0	0	0	0	0	4	0	4	0	0	0	0	6
05:45 PM	0	1	0	1	0	0	0	0	0	2	0	2	0	0	0	0	3
Total	0	7	0	7	0	0	0	0	1	12	0	13	0	0	0	0	20
Grand Total	0	29	1	30	1	0	1	2	3	42	0	45	0	0	0	0	77
Apprch %	0	96.7	3.3		50	0	50		6.7	93.3	0		0	0	0		
Total %	0	37.7	1.3	39	1.3	0	1.3	2.6	3.9	54.5	0	58.4	0	0	0	0	

	Jefferson Boulevard Southbound				I-405 Northbound Off Ramp Westbound				Jefferson Boulevard Northbound				I-405 Northbound On Ramp Eastbound				
Start Time	Left	Thru	Right	App. Total	Left	Thru	Right	App. Total	Left	Thru	Right	App. Total	Left	Thru	Right	App. Total	Int. Total
Peak Hour Analysis From 04:15 PM to 05:00 PM - Peak 1 of 1																	
Peak Hour for Entire Intersection Begins at 04:15 PM																	
04:15 PM	0	**5**	0	**5**	0	0	0	0	0	4	0	4	0	0	0	0	**9**
04:30 PM	0	1	**1**	2	0	0	0	0	0	**6**	0	**6**	0	0	0	0	8
04:45 PM	0	2	0	2	0	0	**1**	**1**	**2**	3	0	5	0	0	0	0	8
05:00 PM	0	1	0	1	0	0	0	0	0	2	0	2	0	0	0	0	3
Total Volume	0	9	1	10	0	0	1	1	2	15	0	17	0	0	0	0	28
% App. Total	0	90	10		0	0	100		11.8	88.2	0		0	0	0		
PHF	.000	.450	.250	.500	.000	.000	.250	.250	.250	.625	.000	.708	.000	.000	.000	.000	.778

Counts Unlimited
PO Box 1178
Corona, CA 92878
(951) 268-6268

City of Culver City
N/S: Jefferson Boulevard
E/W: I-405 Northbound Ramps
Weather: Clear

File Name : 03_CVC_Jefferson_405N PM
Site Code : 16618886
Start Date : 11/28/2018
Page No : 2

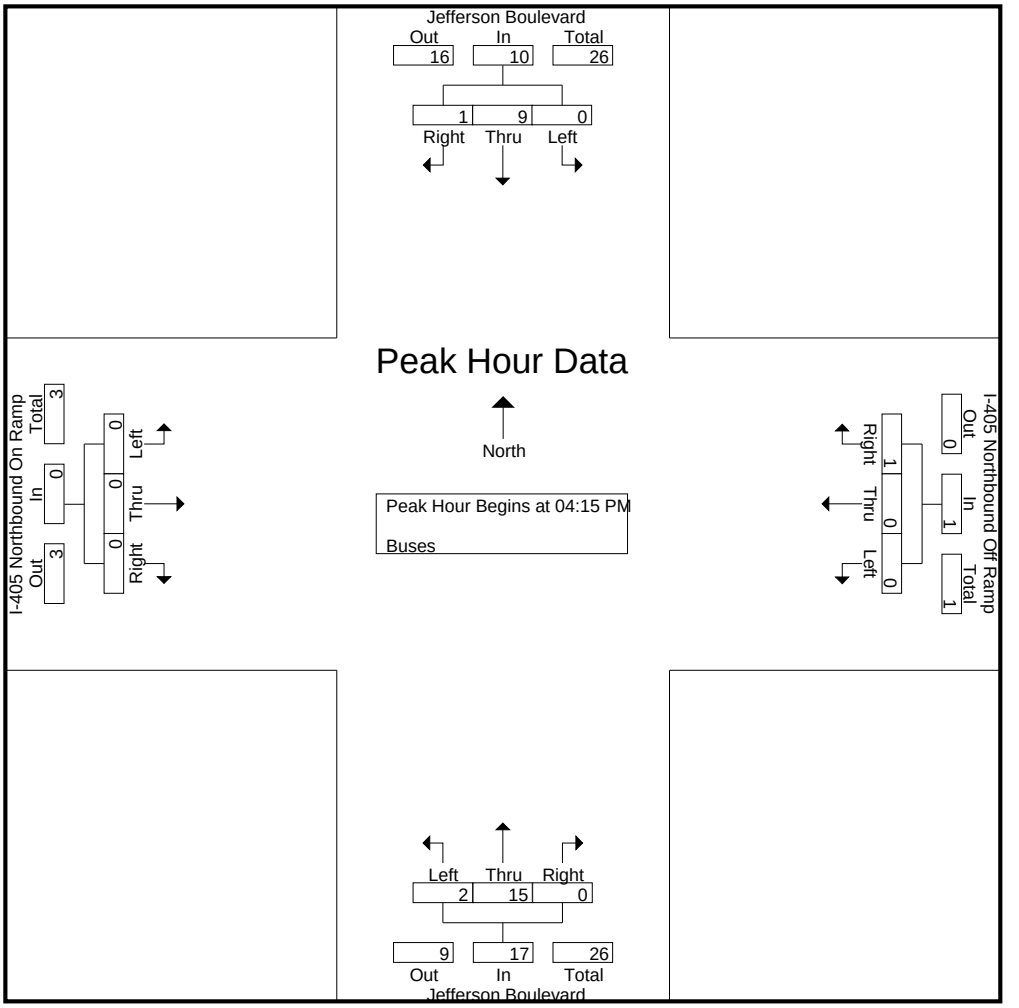

Peak Hour Analysis From 04:15 PM to 05:00 PM - Peak 1 of 1
Peak Hour for Each Approach Begins at:

	04:15 PM				04:15 PM				04:15 PM				04:15 PM			
+0 mins.	0	**5**	0	**5**	0	0	0	0	0	4	0	4	0	0	0	0
+15 mins.	0	1	**1**	2	0	0	0	0	0	**6**	0	**6**	0	0	0	0
+30 mins.	0	2	0	2	0	0	**1**	**1**	**2**	3	0	5	0	0	0	0
+45 mins.	0	1	0	1	0	0	0	0	0	2	0	2	0	0	0	0
Total Volume	0	9	1	10	0	0	1	1	2	15	0	17	0	0	0	0
% App. Total	0	90	10		0	0	100		11.8	88.2	0		0	0	0	
PHF	.000	.450	.250	.500	.000	.000	.250	.250	.250	.625	.000	.708	.000	.000	.000	.000

City Of Los Angeles
Department Of Transportation
MANUAL TRAFFIC COUNT SUMMARY

STREET:

North/South Jefferson Boulevard

East/West I-405 Northbound Ramps

Day: Wednesday **Date:** November 25, 2018 **Weather:** CLEAR

Hours: 7-10AM 3-6PM **Staff:** CUI

School Day: YES **District:** Culver City I/S CODE 0

	N/B	S/B	E/B	W/B
DUAL-WHEELED	112	127	0	73
BIKES	0	1	6	7
BUSES	95	64	0	7

	N/B	TIME	S/B	TIME	E/B	TIME	W/B	TIME
AM PK 15 MIN	334	8.00	293	9.00	0	7.00	236	7.45
PM PK 15 MIN	302	3.45	325	4.15	0	3.00	214	4.45
AM PK HOUR	1264	7.45	1090	8.15	0	7.00	848	7.45
PM PK HOUR	1161	3.00	1207	3.45	0	3.00	790	4.45

NORTHBOUND Approach

Hours	Lt	Th	Rt	Total
7-8	558	567	0	1125
8-9	492	712	0	1204
9-10	324	675	0	999
3-4	297	864	0	1161
4-5	313	806	0	1119
5-6	296	801	0	1097
TOTAL	2280	4425	0	6705

SOUTHBOUND Approach

Hours	Lt	Th	Rt	Total
7-8	0	733	130	863
8-9	0	909	138	1047
9-10	0	880	110	990
3-4	0	985	110	1095
4-5	0	1082	109	1191
5-6	0	1038	94	1132
TOTAL	0	5627	691	6318

TOTAL	**XING S/L**		**XING N/L**	
N-S	Ped	Sch	Ped	Sch
1988	0	0	0	0
2251	0	0	1	0
1989	0	0	4	0
2256	0	0	0	0
2310	0	0	0	0
2229	0	0	0	1
13023	0	0	5	1

EASTBOUND Approach

Hours	Lt	Th	Rt	Total
7-8	0	0	0	0
8-9	0	0	0	0
9-10	0	0	0	0
3-4	0	0	0	0
4-5	0	0	0	0
5-6	0	0	0	0
TOTAL	0	0	0	0

WESTBOUND Approach

Hours	Lt	Th	Rt	Total
7-8	155	251	358	764
8-9	201	266	355	822
9-10	188	228	244	660
3-4	272	10	273	555
4-5	375	3	329	707
5-6	366	7	414	787
TOTAL	1557	765	1973	4295

TOTAL	**XING W/L**		**XING E/L**	
E-W	Ped	Sch	Ped	Sch
764	0	0	5	0
822	0	0	11	0
660	0	0	6	0
555	2	0	11	1
707	0	0	15	3
787	0	0	3	1
4295	2	0	51	5

(Rev Oct 06)

City of Los Angeles
Department of Transportation

BICYCLE COUNT SUMMARY

STREET:

North/South:	Jefferson Boulevard				
East/West:	I-405 Northbound Ramps				
Day:	Wednesday	Date:	11/25/2018	Weather:	CLEAR
School Day:	Yes	District:	Culver City	I/S Code:	0
Hours:	7-10 AM, 3-6 PM	Staff:	CUI		

NORTHBOUND Approach

Hours	Lt	Th	Rt	Total
7-8	0	0	0	0
8-9	0	0	0	0
9-10	0	0	0	0
3-4	0	0	0	0
4-5	0	0	0	0
5-6	0	0	0	0
TOTAL	0	0	0	0

SOUTHBOUND Approach

Hours	Lt	Th	Rt	Total
7-8	0	0	0	0
8-9	0	0	0	0
9-10	0	0	0	0
3-4	0	0	0	0
4-5	0	1	0	1
5-6	0	0	0	0
TOTAL	0	1	0	1

TOTAL

Hours	N-S
7-8	0
8-9	0
9-10	0
3-4	0
4-5	1
5-6	0
TOTAL	1

EASTBOUND Approach

Hours	Lt	Th	Rt	Total
7-8	0	1	0	1
8-9	0	2	0	2
9-10	0	0	0	0
3-4	0	2	0	2
4-5	0	1	0	1
5-6	0	0	0	0
TOTAL	0	6	0	6

WESTBOUND Approach

Hours	Lt	Th	Rt	Total
7-8	0	0	0	0
8-9	0	0	0	0
9-10	0	2	0	2
3-4	0	2	0	2
4-5	0	3	0	3
5-6	0	0	0	0
TOTAL	0	7	0	7

TOTAL

Hours	E-W
7-8	1
8-9	2
9-10	2
3-4	4
4-5	4
5-6	0
TOTAL	13

REMARKS (6 hour total):

	NB	SB	EB	WB	TOTAL
- Female Riders	0	0	2	0	2
- No helmet riders	0	1	6	5	12
- Sidewalk Riding	0	0	5	1	6
- Wrong way riding	0	1	1	2	4

NB: Northbound, **SB**: Southbound, **EB**: Eastbound, **WB**: Westbound, **I/S**: Intersection

Source: CUI

LADOT 2015 CMP

City of Los Angeles
Department of Transportation

PEDESTRIAN COUNT SUMMARY

STREET:

North/South:	Jefferson Boulevard				
East/West:	I-405 Northbound Ramps				
Day:	Wednesday	Date:	################	Weather:	CLEAR
School Day:	YES	District:	Culver City	I/S Code:	0
Hours:	7-10 AM, 3-6 PM	Staff:	CUI		

AM PEAK PERIOD

15 Min. Interval	N-LEG	S-LEG	E-LEG	W-LEG	TOTAL
7:00-7:15	0	0	2	0	2
7:15-7:30	0	0	1	0	1
7:30-7:45	0	0	1	0	1
7:45-8:00	0	0	1	0	1
8:00-8:15	1	0	2	0	3
8:15-8:30	0	0	1	0	1
8:30-8:45	0	0	7	0	7
8:45-9:00	0	0	1	0	1
9:00-9:15	2	0	2	0	4
9:15-9:30	2	0	3	0	5
9:30-9:45	0	0	0	0	0
9:45-10:00	0	0	1	0	1
Hours					
7 - 8	0	0	5	0	5
8 - 9	1	0	11	0	12
9 - 10	4	0	6	0	10
TOTAL	5	0	22	0	27

PM PEAK PERIOD

15 Min. Interval	N-LEG	S-LEG	E-LEG	W-LEG	TOTAL
3:00-3:15	0	0	8	2	10
3:15-3:30	0	0	4	2	6
3:30-3:45	0	0	10	0	10
3:45-4:00	0	0	0	0	0
4:00-4:15	0	0	10	0	10
4:15-4:30	0	0	6	0	6
4:30-4:45	0	0	4	0	4
4:45-5:00	0	0	10	0	10
5:00-5:15	1	0	4	0	5
5:15-5:30	0	0	2	0	2
5:30-5:45	0	0	0	0	0
5:45-6:00	0	0	0	0	0
Hours					
3 - 4	0	0	22	4	26
4 - 5	0	0	30	0	30
5 - 6	1	0	6	0	7
	1	0	58	4	63

REMARKS (6 hour total):

	N-LEG	S-LEG	E-LEG	W-LEG	TOTAL
- Wheelchair/special needs assistance	0	0	0	1	1
- Skateboard/scooter	0	1	1	3	5

N: North, **S**: South, **E**: East, **W**: West, **I/S**: Intersection

Source: LADOT 2015 CMP

Counts Unlimited
PO Box 1178
Corona, CA 92878
(951) 268-6268

City of Culver City
N/S: Jefferson Boulevard
E/W: Slauson Avenue
Weather: Clear

File Name : 04_CVC_Jefferson_Slauson AM
Site Code : 16618886
Start Date : 11/28/2018
Page No : 1

Groups Printed- Passenger Vehicles - Dual Wheeled - Buses

	Jefferson Boulevard Southbound				Slauson Avenue Westbound				Jefferson Boulevard Northbound				Slauson Avenue Eastbound				
Start Time	Left	Thru	Right	App. Total	Left	Thru	Right	App. Total	Left	Thru	Right	App. Total	Left	Thru	Right	App. Total	Int. Total
07:00 AM	1	114	6	121	72	29	0	101	8	141	24	173	0	4	16	20	415
07:15 AM	0	137	5	142	47	32	0	79	21	161	26	208	0	2	16	18	447
07:30 AM	0	175	7	182	40	39	1	80	22	195	31	248	2	5	22	29	539
07:45 AM	4	160	6	170	57	63	0	120	37	240	31	308	0	9	18	27	625
Total	5	586	24	615	216	163	1	380	88	737	112	937	2	20	72	94	2026
08:00 AM	3	187	9	199	57	45	0	102	26	212	37	275	0	9	31	40	616
08:15 AM	4	166	17	187	71	69	0	140	25	207	29	261	8	12	21	41	629
08:30 AM	6	180	23	209	44	66	0	110	34	210	38	282	6	29	27	62	663
08:45 AM	4	166	8	178	79	33	0	112	20	180	37	237	12	50	41	103	630
Total	17	699	57	773	251	213	0	464	105	809	141	1055	26	100	120	246	2538
09:00 AM	2	188	9	199	54	19	0	73	18	189	37	244	1	21	22	44	560
09:15 AM	4	168	7	179	42	18	0	60	9	182	54	245	3	11	21	35	519
09:30 AM	4	159	5	168	52	13	0	65	17	150	44	211	5	12	10	27	471
09:45 AM	9	170	5	184	38	10	0	48	11	152	57	220	2	6	20	28	480
Total	19	685	26	730	186	60	0	246	55	673	192	920	11	50	73	134	2030
Grand Total	41	1970	107	2118	653	436	1	1090	248	2219	445	2912	39	170	265	474	6594
Apprch %	1.9	93	5.1		59.9	40	0.1		8.5	76.2	15.3		8.2	35.9	55.9		
Total %	0.6	29.9	1.6	32.1	9.9	6.6	0	16.5	3.8	33.7	6.7	44.2	0.6	2.6	4	7.2	
Passenger Vehicles	41	1916	107	2064	602	427	1	1030	242	2155	405	2802	36	165	255	456	6352
% Passenger Vehicles	100	97.3	100	97.5	92.2	97.9	100	94.5	97.6	97.1	91	96.2	92.3	97.1	96.2	96.2	96.3
Dual Wheeled	0	50	0	50	21	9	0	30	6	55	6	67	3	5	10	18	165
% Dual Wheeled	0	2.5	0	2.4	3.2	2.1	0	2.8	2.4	2.5	1.3	2.3	7.7	2.9	3.8	3.8	2.5
Buses	0	4	0	4	30	0	0	30	0	9	34	43	0	0	0	0	77
% Buses	0	0.2	0	0.2	4.6	0	0	2.8	0	0.4	7.6	1.5	0	0	0	0	1.2

	Jefferson Boulevard Southbound				Slauson Avenue Westbound				Jefferson Boulevard Northbound				Slauson Avenue Eastbound				
Start Time	Left	Thru	Right	App. Total	Left	Thru	Right	App. Total	Left	Thru	Right	App. Total	Left	Thru	Right	App. Total	Int. Total
Peak Hour Analysis From 07:00 AM to 09:45 AM - Peak 1 of 1																	
Peak Hour for Entire Intersection Begins at 08:00 AM																	
08:00 AM	3	**187**	9	199	57	45	0	102	26	**212**	37	275	0	9	31	40	616
08:15 AM	4	166	17	187	71	**69**	0	**140**	25	207	29	261	8	12	21	41	629
08:30 AM	**6**	180	**23**	**209**	44	66	0	110	**34**	210	**38**	**282**	6	29	27	62	**663**
08:45 AM	4	166	8	178	**79**	33	0	112	20	180	37	237	**12**	**50**	**41**	**103**	630
Total Volume	17	699	57	773	251	213	0	464	105	809	141	1055	26	100	120	246	2538
% App. Total	2.2	90.4	7.4		54.1	45.9	0		10	76.7	13.4		10.6	40.7	48.8		
PHF	.708	.934	.620	.925	.794	.772	.000	.829	.772	.954	.928	.935	.542	.500	.732	.597	.957

Counts Unlimited
PO Box 1178
Corona, CA 92878
(951) 268-6268

City of Culver City
N/S: Jefferson Boulevard
E/W: Slauson Avenue
Weather: Clear

File Name : 04_CVC_Jefferson_Slauson AM
Site Code : 16618886
Start Date : 11/28/2018
Page No : 2

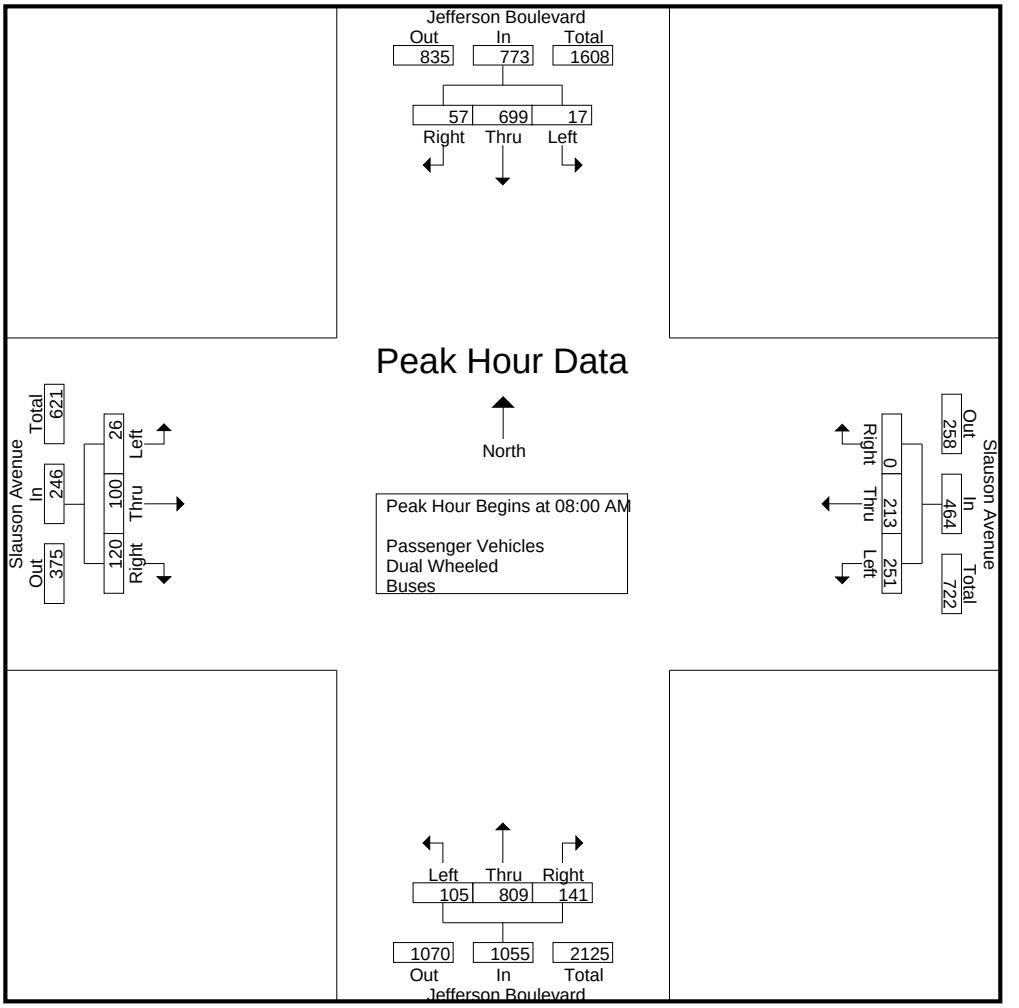

Peak Hour Analysis From 07:00 AM to 09:45 AM - Peak 1 of 1
Peak Hour for Each Approach Begins at:

	08:00 AM				07:45 AM				07:45 AM				08:15 AM			
+0 mins.	3	**187**	9	199	57	63	0	120	**37**	**240**	31	**308**	8	12	21	41
+15 mins.	4	166	17	187	57	45	0	102	26	212	37	275	6	29	27	62
+30 mins.	**6**	180	**23**	**209**	**71**	**69**	0	**140**	25	207	29	261	**12**	**50**	**41**	**103**
+45 mins.	4	166	8	178	44	66	0	110	34	210	**38**	282	1	21	22	44
Total Volume	17	699	57	773	229	243	0	472	122	869	135	1126	27	112	111	250
% App. Total	2.2	90.4	7.4		48.5	51.5	0		10.8	77.2	12		10.8	44.8	44.4	
PHF	.708	.934	.620	.925	.806	.880	.000	.843	.824	.905	.888	.914	.563	.560	.677	.607

Counts Unlimited
PO Box 1178
Corona, CA 92878
(951) 268-6268

City of Culver City
N/S: Jefferson Boulevard
E/W: Slauson Avenue
Weather: Clear

File Name : 04_CVC_Jefferson_Slauson AM
Site Code : 16618886
Start Date : 11/28/2018
Page No : 1

Groups Printed- Passenger Vehicles

	Jefferson Boulevard Southbound				Slauson Avenue Westbound				Jefferson Boulevard Northbound				Slauson Avenue Eastbound				
Start Time	Left	Thru	Right	App. Total	Left	Thru	Right	App. Total	Left	Thru	Right	App. Total	Left	Thru	Right	App. Total	Int. Total
07:00 AM	1	111	6	118	67	29	0	96	8	137	20	165	0	4	12	16	395
07:15 AM	0	135	5	140	43	31	0	74	20	155	22	197	0	2	16	18	429
07:30 AM	0	172	7	179	38	39	1	78	22	184	26	232	2	3	22	27	516
07:45 AM	4	157	6	167	53	61	0	114	35	229	29	293	0	8	18	26	600
Total	5	575	24	604	201	160	1	362	85	705	97	887	2	17	68	87	1940
08:00 AM	3	181	9	193	53	45	0	98	25	209	35	269	0	8	29	37	597
08:15 AM	4	158	17	179	63	69	0	132	25	198	25	248	8	12	21	41	600
08:30 AM	6	174	23	203	40	64	0	104	33	207	36	276	5	29	27	61	644
08:45 AM	4	161	8	173	76	32	0	108	20	177	35	232	11	50	41	102	615
Total	17	674	57	748	232	210	0	442	103	791	131	1025	24	99	118	241	2456
09:00 AM	2	185	9	196	47	16	0	63	17	185	32	234	1	20	19	40	533
09:15 AM	4	162	7	173	41	18	0	59	9	178	52	239	3	11	21	35	506
09:30 AM	4	156	5	165	47	13	0	60	17	147	40	204	5	12	9	26	455
09:45 AM	9	164	5	178	34	10	0	44	11	149	53	213	1	6	20	27	462
Total	19	667	26	712	169	57	0	226	54	659	177	890	10	49	69	128	1956
Grand Total	41	1916	107	2064	602	427	1	1030	242	2155	405	2802	36	165	255	456	6352
Apprch %	2	92.8	5.2		58.4	41.5	0.1		8.6	76.9	14.5		7.9	36.2	55.9		
Total %	0.6	30.2	1.7	32.5	9.5	6.7	0	16.2	3.8	33.9	6.4	44.1	0.6	2.6	4	7.2	

	Jefferson Boulevard Southbound				Slauson Avenue Westbound				Jefferson Boulevard Northbound				Slauson Avenue Eastbound				
Start Time	Left	Thru	Right	App. Total	Left	Thru	Right	App. Total	Left	Thru	Right	App. Total	Left	Thru	Right	App. Total	Int. Total
Peak Hour Analysis From 08:00 AM to 08:45 AM - Peak 1 of 1																	
Peak Hour for Entire Intersection Begins at 08:00 AM																	
08:00 AM	3	**181**	9	193	53	45	0	98	25	**209**	35	269	0	8	29	37	597
08:15 AM	4	158	17	179	63	**69**	0	**132**	25	198	25	248	8	12	21	41	600
08:30 AM	**6**	174	**23**	**203**	40	64	0	104	**33**	207	**36**	**276**	5	29	27	61	**644**
08:45 AM	4	161	8	173	**76**	32	0	108	20	177	35	232	**11**	**50**	**41**	**102**	615
Total Volume	17	674	57	748	232	210	0	442	103	791	131	1025	24	99	118	241	2456
% App. Total	2.3	90.1	7.6		52.5	47.5	0		10	77.2	12.8		10	41.1	49		
PHF	.708	.931	.620	.921	.763	.761	.000	.837	.780	.946	.910	.928	.545	.495	.720	.591	.953

Counts Unlimited
PO Box 1178
Corona, CA 92878
(951) 268-6268

City of Culver City
N/S: Jefferson Boulevard
E/W: Slauson Avenue
Weather: Clear

File Name : 04_CVC_Jefferson_Slauson AM
Site Code : 16618886
Start Date : 11/28/2018
Page No : 2

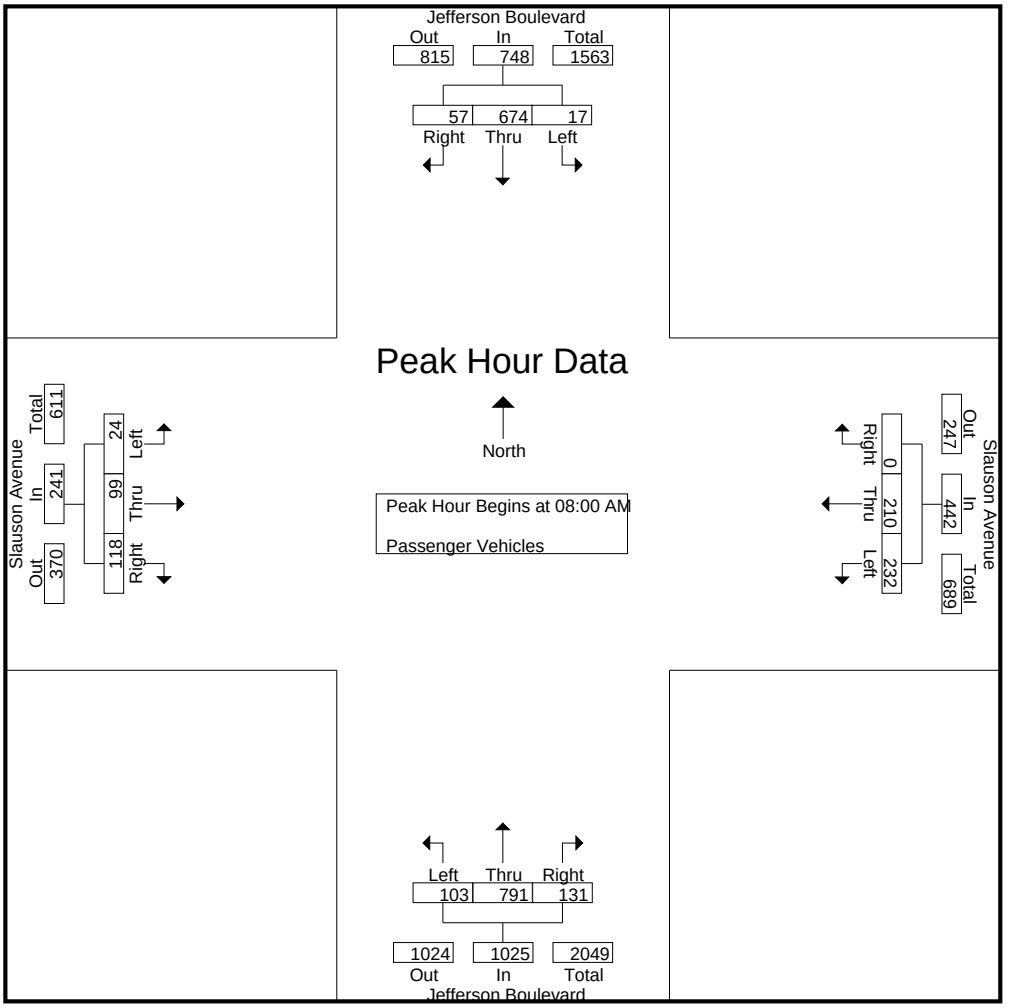

Peak Hour Analysis From 08:00 AM to 08:45 AM - Peak 1 of 1
Peak Hour for Each Approach Begins at:

	08:00 AM				08:00 AM				08:00 AM				08:00 AM			
+0 mins.	3	**181**	9	193	53	45	0	98	25	**209**	35	269	0	8	29	37
+15 mins.	4	158	17	179	63	**69**	0	**132**	25	198	25	248	8	12	21	41
+30 mins.	**6**	174	**23**	**203**	40	64	0	104	**33**	207	**36**	**276**	5	29	27	61
+45 mins.	4	161	8	173	**76**	32	0	108	20	177	35	232	**11**	**50**	**41**	**102**
Total Volume	17	674	57	748	232	210	0	442	103	791	131	1025	24	99	118	241
% App. Total	2.3	90.1	7.6		52.5	47.5	0		10	77.2	12.8		10	41.1	49	
PHF	.708	.931	.620	.921	.763	.761	.000	.837	.780	.946	.910	.928	.545	.495	.720	.591

Counts Unlimited
PO Box 1178
Corona, CA 92878
(951) 268-6268

City of Culver City
N/S: Jefferson Boulevard
E/W: Slauson Avenue
Weather: Clear

File Name : 04_CVC_Jefferson_Slauson AM
Site Code : 16618886
Start Date : 11/28/2018
Page No : 1

Groups Printed- Dual Wheeled

	Jefferson Boulevard Southbound				Slauson Avenue Westbound				Jefferson Boulevard Northbound				Slauson Avenue Eastbound				
Start Time	Left	Thru	Right	App. Total	Left	Thru	Right	App. Total	Left	Thru	Right	App. Total	Left	Thru	Right	App. Total	Int. Total
07:00 AM	0	2	0	2	1	0	0	1	0	2	0	2	0	0	4	4	9
07:15 AM	0	2	0	2	1	1	0	2	1	5	3	9	0	0	0	0	13
07:30 AM	0	3	0	3	1	0	0	1	0	9	0	9	0	2	0	2	15
07:45 AM	0	3	0	3	2	2	0	4	2	10	0	12	0	1	0	1	20
Total	0	10	0	10	5	3	0	8	3	26	3	32	0	3	4	7	57
08:00 AM	0	6	0	6	2	0	0	2	1	3	0	4	0	1	2	3	15
08:15 AM	0	5	0	5	4	0	0	4	0	8	1	9	0	0	0	0	18
08:30 AM	0	6	0	6	2	2	0	4	1	3	0	4	1	0	0	1	15
08:45 AM	0	5	0	5	2	1	0	3	0	3	0	3	1	0	0	1	12
Total	0	22	0	22	10	3	0	13	2	17	1	20	2	1	2	5	60
09:00 AM	0	3	0	3	1	3	0	4	1	3	1	5	0	1	3	4	16
09:15 AM	0	6	0	6	1	0	0	1	0	3	0	3	0	0	0	0	10
09:30 AM	0	3	0	3	1	0	0	1	0	3	0	3	0	0	1	1	8
09:45 AM	0	6	0	6	3	0	0	3	0	3	1	4	1	0	0	1	14
Total	0	18	0	18	6	3	0	9	1	12	2	15	1	1	4	6	48
Grand Total	0	50	0	50	21	9	0	30	6	55	6	67	3	5	10	18	165
Apprch %	0	100	0		70	30	0		9	82.1	9		16.7	27.8	55.6		
Total %	0	30.3	0	30.3	12.7	5.5	0	18.2	3.6	33.3	3.6	40.6	1.8	3	6.1	10.9	

	Jefferson Boulevard Southbound				Slauson Avenue Westbound				Jefferson Boulevard Northbound				Slauson Avenue Eastbound				
Start Time	Left	Thru	Right	App. Total	Left	Thru	Right	App. Total	Left	Thru	Right	App. Total	Left	Thru	Right	App. Total	Int. Total
Peak Hour Analysis From 08:00 AM to 08:45 AM - Peak 1 of 1																	
Peak Hour for Entire Intersection Begins at 08:00 AM																	
08:00 AM	0	**6**	0	**6**	2	0	0	2	**1**	3	0	4	0	**1**	**2**	**3**	15
08:15 AM	0	5	0	5	**4**	0	0	**4**	0	**8**	**1**	**9**	0	0	0	0	**18**
08:30 AM	0	6	0	6	2	**2**	0	4	1	3	0	4	**1**	0	0	1	15
08:45 AM	0	5	0	5	2	1	0	3	0	3	0	3	1	0	0	1	12
Total Volume	0	22	0	22	10	3	0	13	2	17	1	20	2	1	2	5	60
% App. Total	0	100	0		76.9	23.1	0		10	85	5		40	20	40		
PHF	.000	.917	.000	.917	.625	.375	.000	.813	.500	.531	.250	.556	.500	.250	.250	.417	.833

Counts Unlimited
PO Box 1178
Corona, CA 92878
(951) 268-6268

City of Culver City
N/S: Jefferson Boulevard
E/W: Slauson Avenue
Weather: Clear

File Name : 04_CVC_Jefferson_Slauson AM
Site Code : 16618886
Start Date : 11/28/2018
Page No : 2

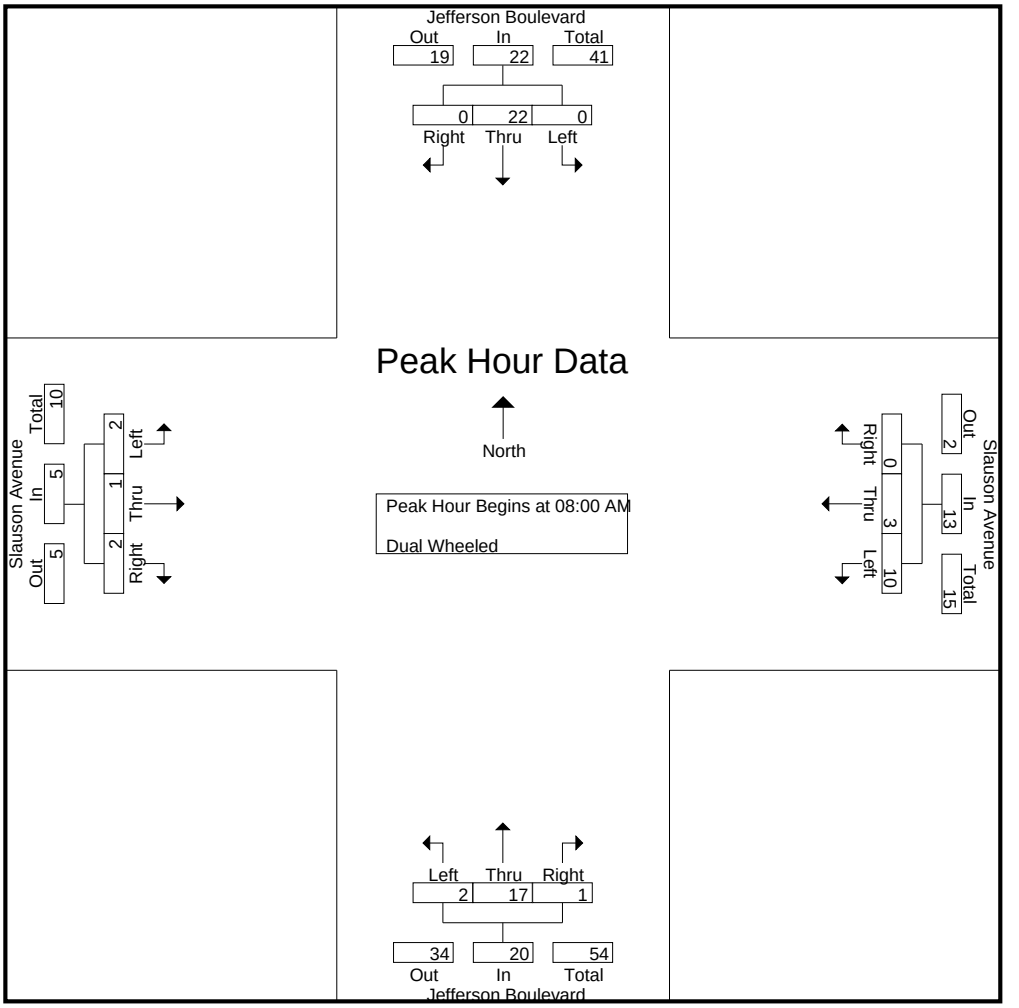

Peak Hour Analysis From 08:00 AM to 08:45 AM - Peak 1 of 1
Peak Hour for Each Approach Begins at:

	08:00 AM				08:00 AM				08:00 AM				08:00 AM			
+0 mins.	0	**6**	0	**6**	2	0	0	2	**1**	3	0	4	0	**1**	**2**	**3**
+15 mins.	0	5	0	5	**4**	0	0	**4**	0	**8**	**1**	**9**	0	0	0	0
+30 mins.	0	6	0	6	2	**2**	0	4	1	3	0	4	**1**	0	0	1
+45 mins.	0	5	0	5	2	1	0	3	0	3	0	3	1	0	0	1
Total Volume	0	22	0	22	10	3	0	13	2	17	1	20	2	1	2	5
% App. Total	0	100	0		76.9	23.1	0		10	85	5		40	20	40	
PHF	.000	.917	.000	.917	.625	.375	.000	.813	.500	.531	.250	.556	.500	.250	.250	.417

Counts Unlimited
PO Box 1178
Corona, CA 92878
(951) 268-6268

City of Culver City
N/S: Jefferson Boulevard
E/W: Slauson Avenue
Weather: Clear

File Name : 04_CVC_Jefferson_Slauson AM
Site Code : 16618886
Start Date : 11/28/2018
Page No : 1

Groups Printed- Buses

	Jefferson Boulevard Southbound				Slauson Avenue Westbound				Jefferson Boulevard Northbound				Slauson Avenue Eastbound				
Start Time	Left	Thru	Right	App. Total	Left	Thru	Right	App. Total	Left	Thru	Right	App. Total	Left	Thru	Right	App. Total	Int. Total
07:00 AM	0	1	0	1	4	0	0	4	0	2	4	6	0	0	0	0	11
07:15 AM	0	0	0	0	3	0	0	3	0	1	1	2	0	0	0	0	5
07:30 AM	0	0	0	0	1	0	0	1	0	2	5	7	0	0	0	0	8
07:45 AM	0	0	0	0	2	0	0	2	0	1	2	3	0	0	0	0	5
Total	0	1	0	1	10	0	0	10	0	6	12	18	0	0	0	0	29
08:00 AM	0	0	0	0	2	0	0	2	0	0	2	2	0	0	0	0	4
08:15 AM	0	3	0	3	4	0	0	4	0	1	3	4	0	0	0	0	11
08:30 AM	0	0	0	0	2	0	0	2	0	0	2	2	0	0	0	0	4
08:45 AM	0	0	0	0	1	0	0	1	0	0	2	2	0	0	0	0	3
Total	0	3	0	3	9	0	0	9	0	1	9	10	0	0	0	0	22
09:00 AM	0	0	0	0	6	0	0	6	0	1	4	5	0	0	0	0	11
09:15 AM	0	0	0	0	0	0	0	0	0	1	2	3	0	0	0	0	3
09:30 AM	0	0	0	0	4	0	0	4	0	0	4	4	0	0	0	0	8
09:45 AM	0	0	0	0	1	0	0	1	0	0	3	3	0	0	0	0	4
Total	0	0	0	0	11	0	0	11	0	2	13	15	0	0	0	0	26
Grand Total	0	4	0	4	30	0	0	30	0	9	34	43	0	0	0	0	77
Apprch %	0	100	0		100	0	0		0	20.9	79.1		0	0	0		
Total %	0	5.2	0	5.2	39	0	0	39	0	11.7	44.2	55.8	0	0	0	0	

	Jefferson Boulevard Southbound				Slauson Avenue Westbound				Jefferson Boulevard Northbound				Slauson Avenue Eastbound				
Start Time	Left	Thru	Right	App. Total	Left	Thru	Right	App. Total	Left	Thru	Right	App. Total	Left	Thru	Right	App. Total	Int. Total
Peak Hour Analysis From 08:00 AM to 08:45 AM - Peak 1 of 1																	
Peak Hour for Entire Intersection Begins at 08:00 AM																	
08:00 AM	0	0	0	0	2	0	0	2	0	0	2	2	0	0	0	0	4
08:15 AM	0	**3**	0	**3**	**4**	0	0	**4**	0	**1**	**3**	**4**	0	0	0	0	**11**
08:30 AM	0	0	0	0	2	0	0	2	0	0	2	2	0	0	0	0	4
08:45 AM	0	0	0	0	1	0	0	1	0	0	2	2	0	0	0	0	3
Total Volume	0	3	0	3	9	0	0	9	0	1	9	10	0	0	0	0	22
% App. Total	0	100	0		100	0	0		0	10	90		0	0	0		
PHF	.000	.250	.000	.250	.563	.000	.000	.563	.000	.250	.750	.625	.000	.000	.000	.000	.500

Counts Unlimited
PO Box 1178
Corona, CA 92878
(951) 268-6268

City of Culver City
N/S: Jefferson Boulevard
E/W: Slauson Avenue
Weather: Clear

File Name : 04_CVC_Jefferson_Slauson AM
Site Code : 16618886
Start Date : 11/28/2018
Page No : 2

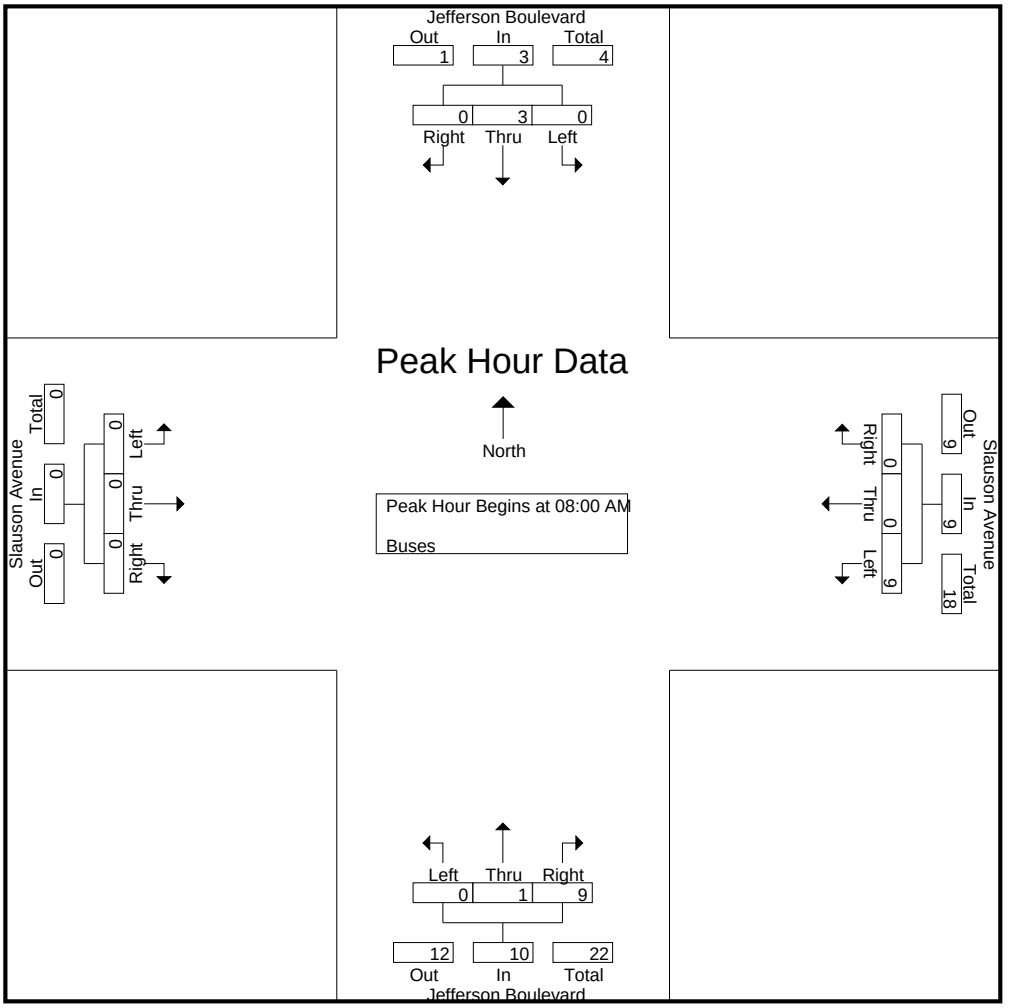

Peak Hour Analysis From 08:00 AM to 08:45 AM - Peak 1 of 1
Peak Hour for Each Approach Begins at:

	08:00 AM				08:00 AM				08:00 AM				08:00 AM			
+0 mins.	0	0	0	0	2	0	0	2	0	0	2	2	0	0	0	0
+15 mins.	0	**3**	0	**3**	**4**	0	0	**4**	0	**1**	**3**	**4**	0	0	0	0
+30 mins.	0	0	0	0	2	0	0	2	0	0	2	2	0	0	0	0
+45 mins.	0	0	0	0	1	0	0	1	0	0	2	2	0	0	0	0
Total Volume	0	3	0	3	9	0	0	9	0	1	9	10	0	0	0	0
% App. Total	0	100	0		100	0	0		0	10	90		0	0	0	
PHF	.000	.250	.000	.250	.563	.000	.000	.563	.000	.250	.750	.625	.000	.000	.000	.000

Counts Unlimited
PO Box 1178
Corona, CA 92878
(951) 268-6268

City of Culver City
N/S: Jefferson Boulevard
E/W: Slauson Avenue
Weather: Clear

File Name : 04_CVC_Jefferson_Slauson PM
Site Code : 16618886
Start Date : 11/28/2018
Page No : 1

Groups Printed- Passenger Vehicles - Dual Wheeled - Buses

	Jefferson Boulevard Southbound				Slauson Avenue Westbound				Jefferson Boulevard Northbound				Slauson Avenue Eastbound				
Start Time	Left	Thru	Right	App. Total	Left	Thru	Right	App. Total	Left	Thru	Right	App. Total	Left	Thru	Right	App. Total	Int. Total
03:00 PM	10	174	13	197	70	18	0	88	21	201	55	277	5	16	34	55	617
03:15 PM	8	169	10	187	71	20	0	91	16	167	57	240	3	21	33	57	575
03:30 PM	16	157	15	188	67	14	0	81	22	186	80	288	9	19	40	68	625
03:45 PM	10	177	10	197	70	15	0	85	24	201	76	301	5	20	33	58	641
Total	44	677	48	769	278	67	0	345	83	755	268	1106	22	76	140	238	2458
04:00 PM	6	188	5	199	74	22	0	96	26	185	72	283	3	25	45	73	651
04:15 PM	12	187	8	207	98	23	0	121	21	194	57	272	7	32	44	83	683
04:30 PM	19	165	8	192	65	15	0	80	21	181	70	272	6	39	55	100	644
04:45 PM	7	165	9	181	50	24	0	74	28	212	72	312	8	26	50	84	651
Total	44	705	30	779	287	84	0	371	96	772	271	1139	24	122	194	340	2629
05:00 PM	16	167	9	192	79	27	0	106	21	209	63	293	8	45	57	110	701
05:15 PM	11	146	7	164	66	20	0	86	20	234	62	316	5	40	51	96	662
05:30 PM	16	155	8	179	64	21	0	85	21	250	51	322	4	49	56	109	695
05:45 PM	11	144	8	163	83	21	0	104	17	220	58	295	8	47	53	108	670
Total	54	612	32	698	292	89	0	381	79	913	234	1226	25	181	217	423	2728
Grand Total	142	1994	110	2246	857	240	0	1097	258	2440	773	3471	71	379	551	1001	7815
Apprch %	6.3	88.8	4.9		78.1	21.9	0		7.4	70.3	22.3		7.1	37.9	55		
Total %	1.8	25.5	1.4	28.7	11	3.1	0	14	3.3	31.2	9.9	44.4	0.9	4.8	7.1	12.8	
Passenger Vehicles	141	1945	110	2196	820	236	0	1056	257	2410	734	3401	71	373	541	985	7638
% Passenger Vehicles	99.3	97.5	100	97.8	95.7	98.3	0	96.3	99.6	98.8	95	98	100	98.4	98.2	98.4	97.7
Dual Wheeled	0	45	0	45	12	4	0	16	1	26	2	29	0	6	10	16	106
% Dual Wheeled	0	2.3	0	2	1.4	1.7	0	1.5	0.4	1.1	0.3	0.8	0	1.6	1.8	1.6	1.4
Buses	1	4	0	5	25	0	0	25	0	4	37	41	0	0	0	0	71
% Buses	0.7	0.2	0	0.2	2.9	0	0	2.3	0	0.2	4.8	1.2	0	0	0	0	0.9

	Jefferson Boulevard Southbound				Slauson Avenue Westbound				Jefferson Boulevard Northbound				Slauson Avenue Eastbound				
Start Time	Left	Thru	Right	App. Total	Left	Thru	Right	App. Total	Left	Thru	Right	App. Total	Left	Thru	Right	App. Total	Int. Total
Peak Hour Analysis From 03:00 PM to 05:45 PM - Peak 1 of 1																	
Peak Hour for Entire Intersection Begins at 05:00 PM																	
05:00 PM	**16**	**167**	**9**	**192**	79	**27**	0	**106**	**21**	209	**63**	293	**8**	45	**57**	**110**	**701**
05:15 PM	11	146	7	164	66	20	0	86	20	234	62	316	5	40	51	96	662
05:30 PM	16	155	8	179	64	21	0	85	21	**250**	51	**322**	4	**49**	56	109	695
05:45 PM	11	144	8	163	**83**	21	0	104	17	220	58	295	8	47	53	108	670
Total Volume	54	612	32	698	292	89	0	381	79	913	234	1226	25	181	217	423	2728
% App. Total	7.7	87.7	4.6		76.6	23.4	0		6.4	74.5	19.1		5.9	42.8	51.3		
PHF	.844	.916	.889	.909	.880	.824	.000	.899	.940	.913	.929	.952	.781	.923	.952	.961	.973

Counts Unlimited
PO Box 1178
Corona, CA 92878
(951) 268-6268

City of Culver City
N/S: Jefferson Boulevard
E/W: Slauson Avenue
Weather: Clear

File Name : 04_CVC_Jefferson_Slauson PM
Site Code : 16618886
Start Date : 11/28/2018
Page No : 2

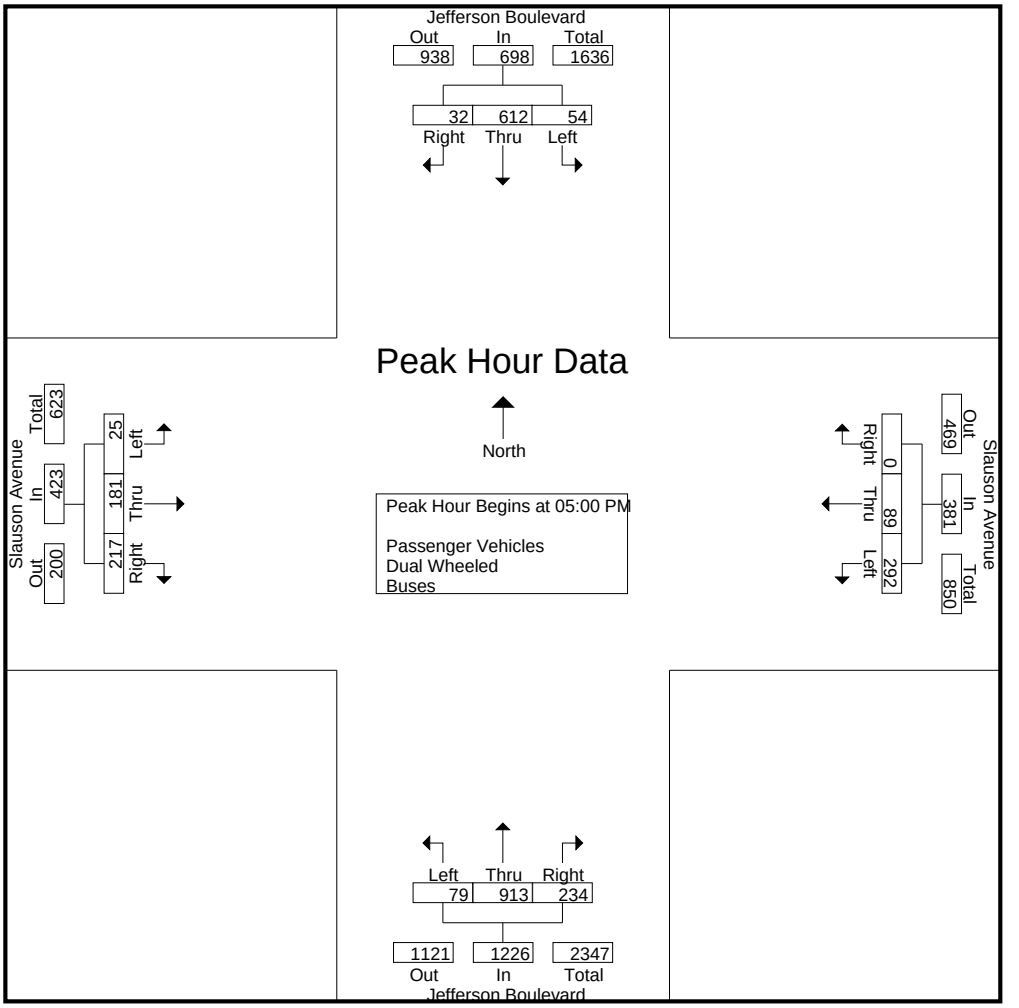

Peak Hour Analysis From 03:00 PM to 05:45 PM - Peak 1 of 1
Peak Hour for Each Approach Begins at:

	03:45 PM				03:30 PM				04:45 PM				05:00 PM			
+0 mins.	10	177	**10**	197	67	14	0	81	**28**	212	**72**	312	**8**	45	**57**	**110**
+15 mins.	6	**188**	5	199	70	15	0	85	21	209	63	293	5	40	51	96
+30 mins.	12	187	8	**207**	74	22	0	96	20	234	62	316	4	**49**	56	109
+45 mins.	**19**	165	8	192	**98**	**23**	0	**121**	21	**250**	51	**322**	8	47	53	108
Total Volume	47	717	31	795	309	74	0	383	90	905	248	1243	25	181	217	423
% App. Total	5.9	90.2	3.9		80.7	19.3	0		7.2	72.8	20		5.9	42.8	51.3	
PHF	.618	.953	.775	.960	.788	.804	.000	.791	.804	.905	.861	.965	.781	.923	.952	.961

Counts Unlimited
PO Box 1178
Corona, CA 92878
(951) 268-6268

City of Culver City
N/S: Jefferson Boulevard
E/W: Slauson Avenue
Weather: Clear

File Name : 04_CVC_Jefferson_Slauson PM
Site Code : 16618886
Start Date : 11/28/2018
Page No : 1

Groups Printed- Passenger Vehicles

	Jefferson Boulevard Southbound				Slauson Avenue Westbound				Jefferson Boulevard Northbound				Slauson Avenue Eastbound				
Start Time	Left	Thru	Right	App. Total	Left	Thru	Right	App. Total	Left	Thru	Right	App. Total	Left	Thru	Right	App. Total	Int. Total
03:00 PM	10	170	13	193	65	17	0	82	21	200	53	274	5	16	30	51	600
03:15 PM	8	167	10	185	66	19	0	85	16	164	55	235	3	20	33	56	561
03:30 PM	16	150	15	181	65	14	0	79	22	184	76	282	9	18	39	66	608
03:45 PM	10	169	10	189	68	15	0	83	24	198	71	293	5	20	32	57	622
Total	44	656	48	748	264	65	0	329	83	746	255	1084	22	74	134	230	2391
04:00 PM	6	184	5	195	72	22	0	94	26	184	69	279	3	25	44	72	640
04:15 PM	12	181	8	201	93	22	0	115	20	189	55	264	7	31	43	81	661
04:30 PM	19	160	8	187	63	15	0	78	21	179	64	264	6	38	54	98	627
04:45 PM	7	164	9	180	46	24	0	70	28	208	68	304	8	26	50	84	638
Total	44	689	30	763	274	83	0	357	95	760	256	1111	24	120	191	335	2566
05:00 PM	16	163	9	188	77	26	0	103	21	204	61	286	8	44	57	109	686
05:15 PM	11	140	7	158	63	20	0	83	20	234	58	312	5	40	51	96	649
05:30 PM	16	154	8	178	61	21	0	82	21	247	49	317	4	48	56	108	685
05:45 PM	10	143	8	161	81	21	0	102	17	219	55	291	8	47	52	107	661
Total	53	600	32	685	282	88	0	370	79	904	223	1206	25	179	216	420	2681
Grand Total	141	1945	110	2196	820	236	0	1056	257	2410	734	3401	71	373	541	985	7638
Apprch %	6.4	88.6	5		77.7	22.3	0		7.6	70.9	21.6		7.2	37.9	54.9		
Total %	1.8	25.5	1.4	28.8	10.7	3.1	0	13.8	3.4	31.6	9.6	44.5	0.9	4.9	7.1	12.9	

	Jefferson Boulevard Southbound				Slauson Avenue Westbound				Jefferson Boulevard Northbound				Slauson Avenue Eastbound				
Start Time	Left	Thru	Right	App. Total	Left	Thru	Right	App. Total	Left	Thru	Right	App. Total	Left	Thru	Right	App. Total	Int. Total
Peak Hour Analysis From 05:00 PM to 05:45 PM - Peak 1 of 1																	
Peak Hour for Entire Intersection Begins at 05:00 PM																	
05:00 PM	**16**	**163**	**9**	**188**	77	**26**	0	**103**	**21**	204	**61**	286	**8**	44	**57**	**109**	**686**
05:15 PM	11	140	7	158	63	20	0	83	20	234	58	312	5	40	51	96	649
05:30 PM	16	154	8	178	61	21	0	82	21	**247**	49	**317**	4	**48**	56	108	685
05:45 PM	10	143	8	161	**81**	21	0	102	17	219	55	291	8	47	52	107	661
Total Volume	53	600	32	685	282	88	0	370	79	904	223	1206	25	179	216	420	2681
% App. Total	7.7	87.6	4.7		76.2	23.8	0		6.6	75	18.5		6	42.6	51.4		
PHF	.828	.920	.889	.911	.870	.846	.000	.898	.940	.915	.914	.951	.781	.932	.947	.963	.977

Counts Unlimited
PO Box 1178
Corona, CA 92878
(951) 268-6268

City of Culver City
N/S: Jefferson Boulevard
E/W: Slauson Avenue
Weather: Clear

File Name : 04_CVC_Jefferson_Slauson PM
Site Code : 16618886
Start Date : 11/28/2018
Page No : 2

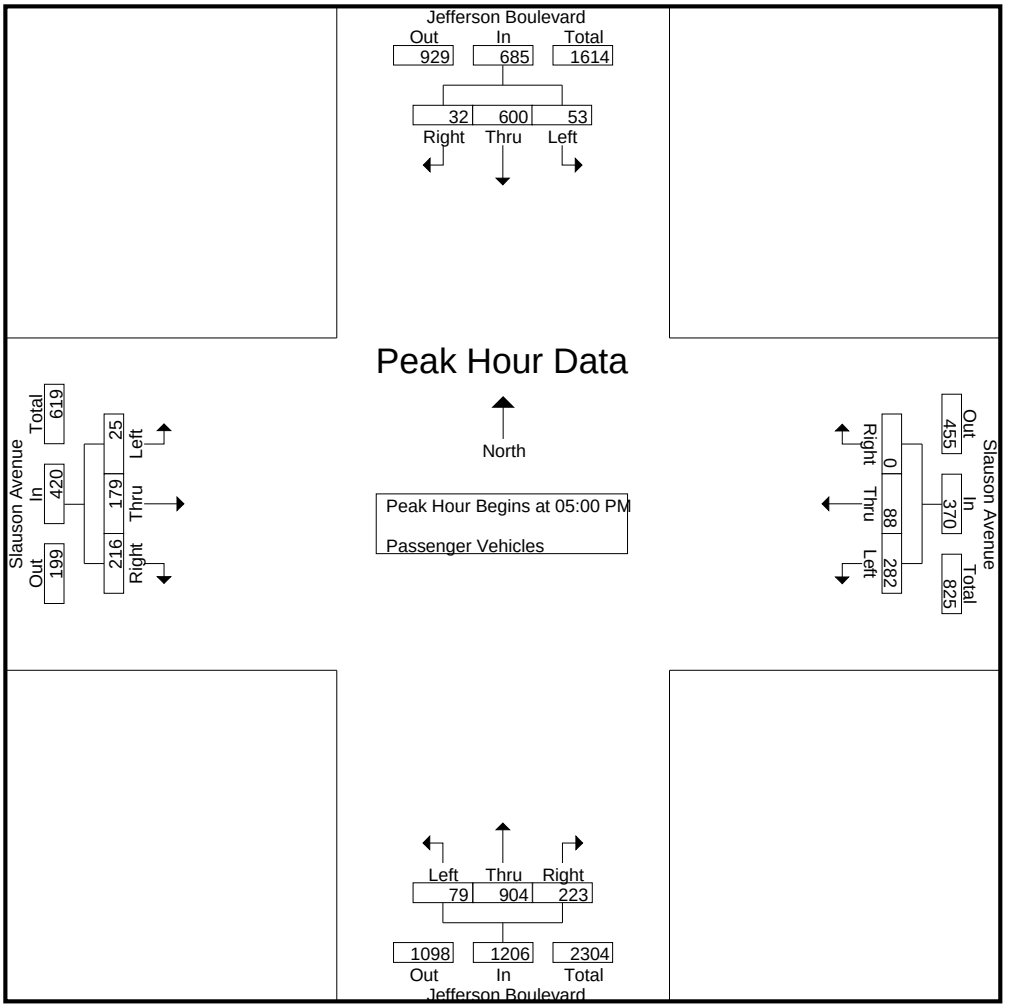

Peak Hour Analysis From 05:00 PM to 05:45 PM - Peak 1 of 1
Peak Hour for Each Approach Begins at:

	05:00 PM				05:00 PM				05:00 PM				05:00 PM			
+0 mins.	**16**	**163**	**9**	**188**	77	**26**	0	**103**	**21**	204	**61**	286	**8**	44	**57**	**109**
+15 mins.	11	140	7	158	63	20	0	83	20	234	58	312	5	40	51	96
+30 mins.	16	154	8	178	61	21	0	82	21	**247**	49	**317**	4	**48**	56	108
+45 mins.	10	143	8	161	**81**	21	0	102	17	219	55	291	8	47	52	107
Total Volume	53	600	32	685	282	88	0	370	79	904	223	1206	25	179	216	420
% App. Total	7.7	87.6	4.7		76.2	23.8	0		6.6	75	18.5		6	42.6	51.4	
PHF	.828	.920	.889	.911	.870	.846	.000	.898	.940	.915	.914	.951	.781	.932	.947	.963

Counts Unlimited
PO Box 1178
Corona, CA 92878
(951) 268-6268

City of Culver City
N/S: Jefferson Boulevard
E/W: Slauson Avenue
Weather: Clear

File Name : 04_CVC_Jefferson_Slauson PM
Site Code : 16618886
Start Date : 11/28/2018
Page No : 1

Groups Printed- Dual Wheeled

	Jefferson Boulevard Southbound				Slauson Avenue Westbound				Jefferson Boulevard Northbound				Slauson Avenue Eastbound				
Start Time	Left	Thru	Right	App. Total	Left	Thru	Right	App. Total	Left	Thru	Right	App. Total	Left	Thru	Right	App. Total	Int. Total
03:00 PM	0	4	0	4	3	1	0	4	0	1	0	1	0	0	4	4	13
03:15 PM	0	2	0	2	2	1	0	3	0	3	1	4	0	1	0	1	10
03:30 PM	0	6	0	6	0	0	0	0	0	2	0	2	0	1	1	2	10
03:45 PM	0	7	0	7	0	0	0	0	0	3	0	3	0	0	1	1	11
Total	0	19	0	19	5	2	0	7	0	9	1	10	0	2	6	8	44
04:00 PM	0	2	0	2	1	0	0	1	0	1	0	1	0	0	1	1	5
04:15 PM	0	6	0	6	0	1	0	1	1	4	0	5	0	1	1	2	14
04:30 PM	0	5	0	5	1	0	0	1	0	1	0	1	0	1	1	2	9
04:45 PM	0	1	0	1	2	0	0	2	0	3	1	4	0	0	0	0	7
Total	0	14	0	14	4	1	0	5	1	9	1	11	0	2	3	5	35
05:00 PM	0	4	0	4	1	1	0	2	0	5	0	5	0	1	0	1	12
05:15 PM	0	6	0	6	0	0	0	0	0	0	0	0	0	0	0	0	6
05:30 PM	0	1	0	1	1	0	0	1	0	2	0	2	0	1	0	1	5
05:45 PM	0	1	0	1	1	0	0	1	0	1	0	1	0	0	1	1	4
Total	0	12	0	12	3	1	0	4	0	8	0	8	0	2	1	3	27
Grand Total	0	45	0	45	12	4	0	16	1	26	2	29	0	6	10	16	106
Apprch %	0	100	0		75	25	0		3.4	89.7	6.9		0	37.5	62.5		
Total %	0	42.5	0	42.5	11.3	3.8	0	15.1	0.9	24.5	1.9	27.4	0	5.7	9.4	15.1	

	Jefferson Boulevard Southbound				Slauson Avenue Westbound				Jefferson Boulevard Northbound				Slauson Avenue Eastbound				
Start Time	Left	Thru	Right	App. Total	Left	Thru	Right	App. Total	Left	Thru	Right	App. Total	Left	Thru	Right	App. Total	Int. Total
Peak Hour Analysis From 05:00 PM to 05:45 PM - Peak 1 of 1																	
Peak Hour for Entire Intersection Begins at 05:00 PM																	
05:00 PM	0	4	0	4	**1**	**1**	0	**2**	0	**5**	0	**5**	0	**1**	0	**1**	**12**
05:15 PM	0	**6**	0	**6**	0	0	0	0	0	0	0	0	0	0	0	0	6
05:30 PM	0	1	0	1	1	0	0	1	0	2	0	2	0	1	0	1	5
05:45 PM	0	1	0	1	1	0	0	1	0	1	0	1	0	0	**1**	1	4
Total Volume	0	12	0	12	3	1	0	4	0	8	0	8	0	2	1	3	27
% App. Total	0	100	0		75	25	0		0	100	0		0	66.7	33.3		
PHF	.000	.500	.000	.500	.750	.250	.000	.500	.000	.400	.000	.400	.000	.500	.250	.750	.563

Counts Unlimited
PO Box 1178
Corona, CA 92878
(951) 268-6268

City of Culver City
N/S: Jefferson Boulevard
E/W: Slauson Avenue
Weather: Clear

File Name : 04_CVC_Jefferson_Slauson PM
Site Code : 16618886
Start Date : 11/28/2018
Page No : 2

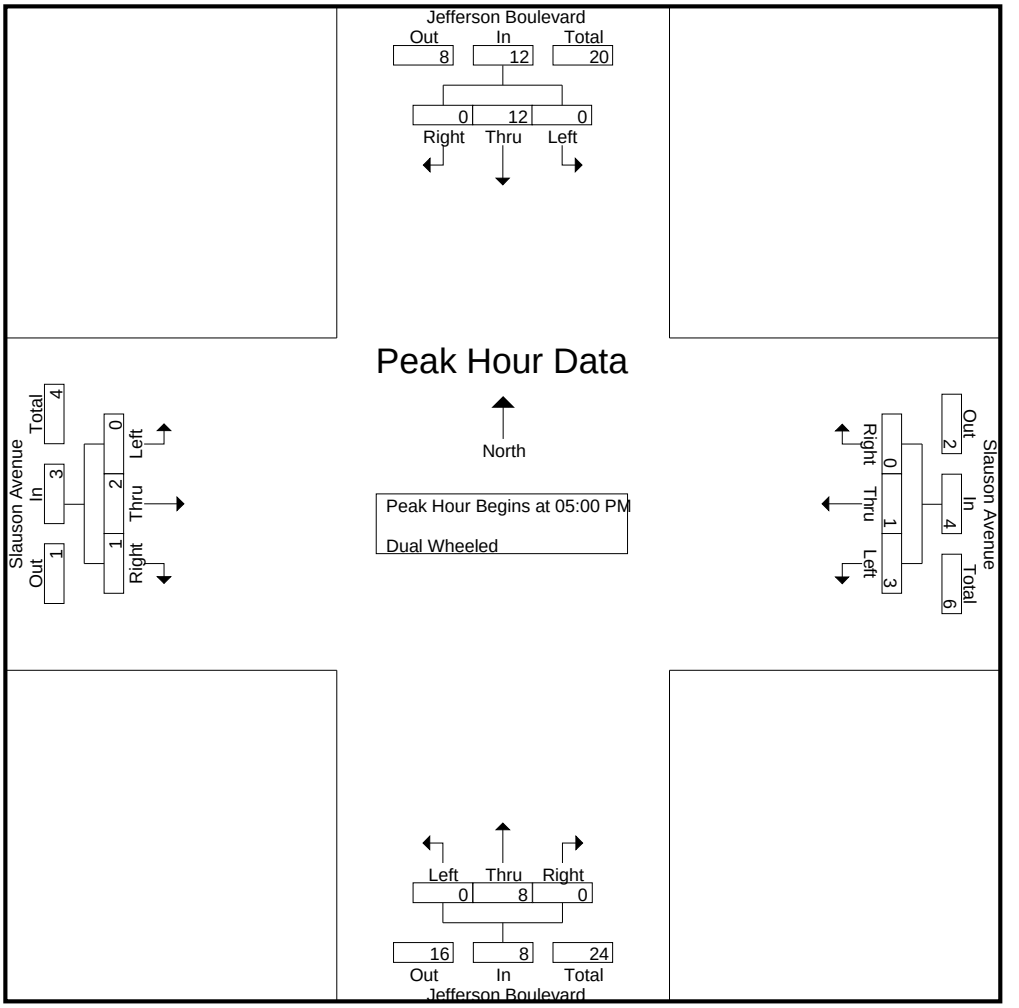

Peak Hour Analysis From 05:00 PM to 05:45 PM - Peak 1 of 1
Peak Hour for Each Approach Begins at:

	05:00 PM				05:00 PM				05:00 PM				05:00 PM			
+0 mins.	0	4	0	4	**1**	**1**	0	**2**	0	**5**	0	**5**	0	**1**	0	**1**
+15 mins.	0	**6**	0	**6**	0	0	0	0	0	0	0	0	0	0	0	0
+30 mins.	0	1	0	1	1	0	0	1	0	2	0	2	0	1	0	1
+45 mins.	0	1	0	1	1	0	0	1	0	1	0	1	0	0	**1**	1
Total Volume	0	12	0	12	3	1	0	4	0	8	0	8	0	2	1	3
% App. Total	0	100	0		75	25	0		0	100	0		0	66.7	33.3	
PHF	.000	.500	.000	.500	.750	.250	.000	.500	.000	.400	.000	.400	.000	.500	.250	.750

Counts Unlimited
PO Box 1178
Corona, CA 92878
(951) 268-6268

City of Culver City
N/S: Jefferson Boulevard
E/W: Slauson Avenue
Weather: Clear

File Name : 04_CVC_Jefferson_Slauson PM
Site Code : 16618886
Start Date : 11/28/2018
Page No : 1

Groups Printed- Buses

	Jefferson Boulevard Southbound				Slauson Avenue Westbound				Jefferson Boulevard Northbound				Slauson Avenue Eastbound				
Start Time	Left	Thru	Right	App. Total	Left	Thru	Right	App. Total	Left	Thru	Right	App. Total	Left	Thru	Right	App. Total	Int. Total
03:00 PM	0	0	0	0	2	0	0	2	0	0	2	2	0	0	0	0	4
03:15 PM	0	0	0	0	3	0	0	3	0	0	1	1	0	0	0	0	4
03:30 PM	0	1	0	1	2	0	0	2	0	0	4	4	0	0	0	0	7
03:45 PM	0	1	0	1	2	0	0	2	0	0	5	5	0	0	0	0	8
Total	0	2	0	2	9	0	0	9	0	0	12	12	0	0	0	0	23
04:00 PM	0	2	0	2	1	0	0	1	0	0	3	3	0	0	0	0	6
04:15 PM	0	0	0	0	5	0	0	5	0	1	2	3	0	0	0	0	8
04:30 PM	0	0	0	0	1	0	0	1	0	1	6	7	0	0	0	0	8
04:45 PM	0	0	0	0	2	0	0	2	0	1	3	4	0	0	0	0	6
Total	0	2	0	2	9	0	0	9	0	3	14	17	0	0	0	0	28
05:00 PM	0	0	0	0	1	0	0	1	0	0	2	2	0	0	0	0	3
05:15 PM	0	0	0	0	3	0	0	3	0	0	4	4	0	0	0	0	7
05:30 PM	0	0	0	0	2	0	0	2	0	1	2	3	0	0	0	0	5
05:45 PM	1	0	0	1	1	0	0	1	0	0	3	3	0	0	0	0	5
Total	1	0	0	1	7	0	0	7	0	1	11	12	0	0	0	0	20
Grand Total	1	4	0	5	25	0	0	25	0	4	37	41	0	0	0	0	71
Apprch %	20	80	0		100	0	0		0	9.8	90.2		0	0	0		
Total %	1.4	5.6	0	7	35.2	0	0	35.2	0	5.6	52.1	57.7	0	0	0	0	

	Jefferson Boulevard Southbound				Slauson Avenue Westbound				Jefferson Boulevard Northbound				Slauson Avenue Eastbound				
Start Time	Left	Thru	Right	App. Total	Left	Thru	Right	App. Total	Left	Thru	Right	App. Total	Left	Thru	Right	App. Total	Int. Total
Peak Hour Analysis From 05:00 PM to 05:45 PM - Peak 1 of 1																	
Peak Hour for Entire Intersection Begins at 05:00 PM																	
05:00 PM	0	0	0	0	1	0	0	1	0	0	2	2	0	0	0	0	3
05:15 PM	0	0	0	0	**3**	0	0	**3**	0	0	**4**	**4**	0	0	0	0	**7**
05:30 PM	0	0	0	0	2	0	0	2	0	**1**	2	3	0	0	0	0	5
05:45 PM	**1**	0	0	**1**	1	0	0	1	0	0	3	3	0	0	0	0	5
Total Volume	1	0	0	1	7	0	0	7	0	1	11	12	0	0	0	0	20
% App. Total	100	0	0		100	0	0		0	8.3	91.7		0	0	0		
PHF	.250	.000	.000	.250	.583	.000	.000	.583	.000	.250	.688	.750	.000	.000	.000	.000	.714

Counts Unlimited
PO Box 1178
Corona, CA 92878
(951) 268-6268

City of Culver City
N/S: Jefferson Boulevard
E/W: Slauson Avenue
Weather: Clear

File Name : 04_CVC_Jefferson_Slauson PM
Site Code : 16618886
Start Date : 11/28/2018
Page No : 2

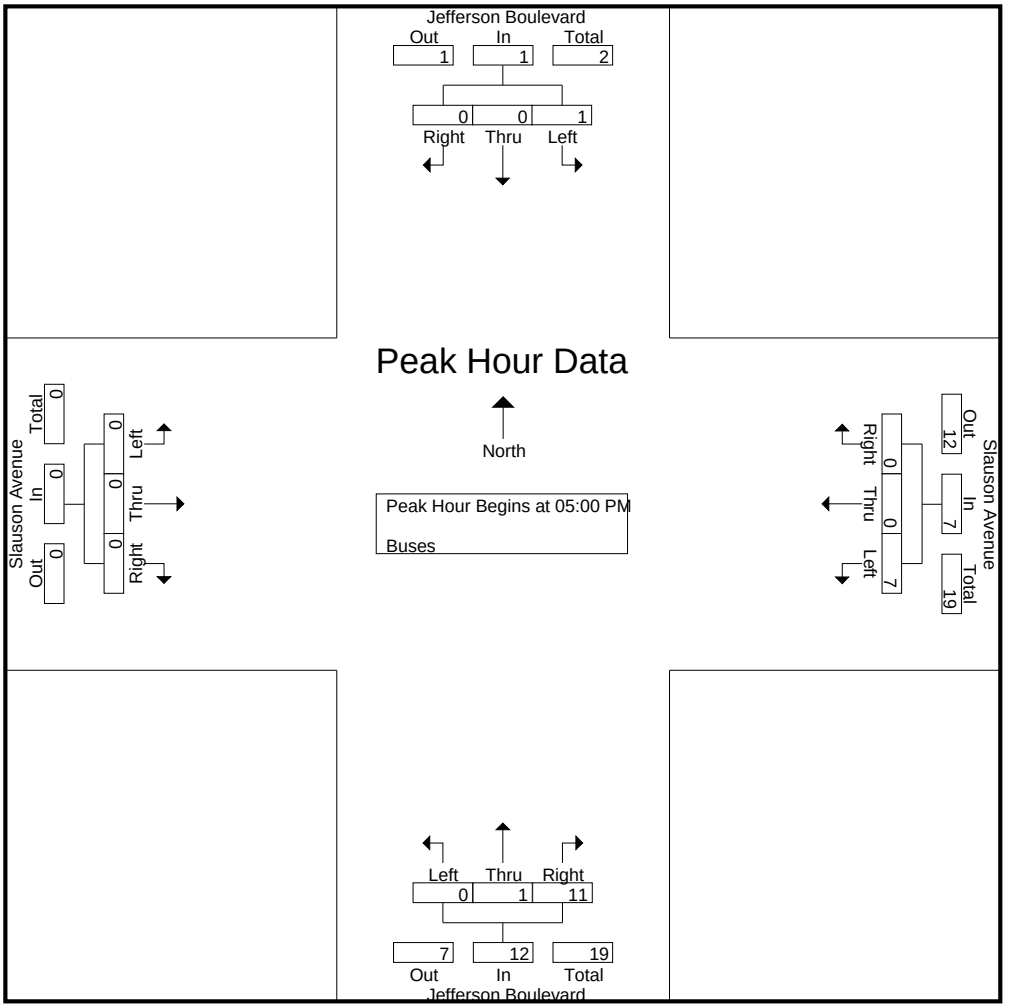

Peak Hour Analysis From 05:00 PM to 05:45 PM - Peak 1 of 1
Peak Hour for Each Approach Begins at:

	05:00 PM				05:00 PM				05:00 PM				05:00 PM			
+0 mins.	0	0	0	0	1	0	0	1	0	0	2	2	0	0	0	0
+15 mins.	0	0	0	0	**3**	0	0	**3**	0	0	**4**	**4**	0	0	0	0
+30 mins.	0	0	0	0	2	0	0	2	0	**1**	2	3	0	0	0	0
+45 mins.	**1**	0	0	**1**	1	0	0	1	0	0	3	3	0	0	0	0
Total Volume	1	0	0	1	7	0	0	7	0	1	11	12	0	0	0	0
% App. Total	100	0	0		100	0	0		0	8.3	91.7		0	0	0	
PHF	.250	.000	.000	.250	.583	.000	.000	.583	.000	.250	.688	.750	.000	.000	.000	.000

City Of Los Angeles
Department Of Transportation
MANUAL TRAFFIC COUNT SUMMARY

STREET:

North/South Jefferson Boulevard

East/West Slauson Avenue

Day: Wednesday **Date:** November 25, 2018 **Weather:** CLEAR

Hours: 7-10AM 3-6PM **Staff:** CUI

School Day: YES **District:** Culver City I/S CODE 0

	N/B	S/B	E/B	W/B
DUAL-WHEELED	96	95	34	46
BIKES	9	10	7	9
BUSES	84	9	0	55

	N/B	TIME	S/B	TIME	E/B	TIME	W/B	TIME
AM PK 15 MIN	308	7.45	209	8.30	103	8.45	140	8.15
PM PK 15 MIN	322	5.30	207	4.15	110	5.00	121	4.15
AM PK HOUR	1126	7.45	773	8.00	250	8.15	472	7.45
PM PK HOUR	1243	4.45	795	3.45	423	5.00	383	3.30

NORTHBOUND Approach

Hours	Lt	Th	Rt	Total
7-8	88	737	112	937
8-9	105	809	141	1055
9-10	55	673	192	920
3-4	83	755	268	1106
4-5	96	772	271	1139
5-6	79	913	234	1226
TOTAL	506	4659	1218	6383

SOUTHBOUND Approach

Hours	Lt	Th	Rt	Total
7-8	5	586	24	615
8-9	17	699	57	773
9-10	19	685	26	730
3-4	44	677	48	769
4-5	44	705	30	779
5-6	54	612	32	698
TOTAL	183	3964	217	4364

TOTAL	**XING S/L**		**XING N/L**	
N-S	Ped	Sch	Ped	Sch
1552	0	0	5	0
1828	0	0	14	0
1650	0	0	13	0
1875	0	0	6	0
1918	0	0	15	0
1924	1	0	10	0
10747	1	0	63	0

EASTBOUND Approach

Hours	Lt	Th	Rt	Total
7-8	2	20	72	94
8-9	26	100	120	246
9-10	11	50	73	134
3-4	22	76	140	238
4-5	24	122	194	340
5-6	25	181	217	423
TOTAL	110	549	816	1475

WESTBOUND Approach

Hours	Lt	Th	Rt	Total
7-8	216	163	1	380
8-9	251	213	0	464
9-10	186	60	0	246
3-4	278	67	0	345
4-5	287	84	0	371
5-6	292	89	0	381
TOTAL	1510	676	1	2187

TOTAL	**XING W/L**		**XING E/L**	
E-W	Ped	Sch	Ped	Sch
474	0	0	5	0
710	3	0	9	1
380	6	0	7	2
583	1	0	4	3
711	0	0	8	1
804	1	0	7	0
3662	11	0	40	7

(Rev Oct 06)

City of Los Angeles
Department of Transportation

BICYCLE COUNT SUMMARY

STREET:

North/South:	Jefferson Boulevard				
East/West:	Slauson Avenue				
Day:	Wednesday	Date:	11/25/2018	Weather:	CLEAR
School Day:	Yes	District:	Culver City	I/S Code:	0
Hours:	7-10 AM, 3-6 PM	Staff:	CUI		

NORTHBOUND Approach

Hours	Lt	Th	Rt	Total
7-8	0	0	0	0
8-9	0	0	0	0
9-10	0	0	0	0
3-4	0	2	0	2
4-5	0	3	0	3
5-6	2	2	0	4
TOTAL	2	7	0	9

SOUTHBOUND Approach

Hours	Lt	Th	Rt	Total
7-8	0	0	1	1
8-9	0	1	0	1
9-10	0	0	0	0
3-4	0	1	1	2
4-5	0	5	0	5
5-6	0	1	0	1
TOTAL	0	8	2	10

TOTAL

Hours	N-S
7-8	1
8-9	1
9-10	0
3-4	4
4-5	8
5-6	5
TOTAL	19

EASTBOUND Approach

Hours	Lt	Th	Rt	Total
7-8	0	0	1	1
8-9	0	0	2	2
9-10	0	0	0	0
3-4	1	1	0	2
4-5	0	1	0	1
5-6	0	1	0	1
TOTAL	1	3	3	7

WESTBOUND Approach

Hours	Lt	Th	Rt	Total
7-8	0	0	0	0
8-9	0	0	0	0
9-10	0	1	0	1
3-4	0	1	2	3
4-5	0	3	0	3
5-6	0	1	1	2
TOTAL	0	6	3	9

TOTAL

Hours	E-W
7-8	1
8-9	2
9-10	1
3-4	5
4-5	4
5-6	3
TOTAL	16

REMARKS (6 hour total):

	NB	SB	EB	WB	TOTAL
- Female Riders	2	0	0	0	2
- No helmet riders	7	8	6	8	29
- Sidewalk Riding	7	6	6	7	26
- Wrong way riding	2	6	2	1	11

NB: Northbound, **SB**: Southbound, **EB**: Eastbound, **WB**: Westbound, **I/S**: Intersection

Source: CUI

LADOT 2015 CMP

City of Los Angeles
Department of Transportation

PEDESTRIAN COUNT SUMMARY

STREET:

North/South:	Jefferson Boulevard				
East/West:	Slauson Avenue				
Day:	Wednesday	Date:	################	Weather:	CLEAR
School Day:	YES	District:	Culver City	I/S Code:	0
Hours:	7-10 AM, 3-6 PM	Staff:	CUI		

AM PEAK PERIOD

15 Min. Interval	N-LEG	S-LEG	E-LEG	W-LEG	TOTAL
7:00-7:15	2	0	2	0	4
7:15-7:30	2	0	0	0	2
7:30-7:45	0	0	1	0	1
7:45-8:00	1	0	2	0	3
8:00-8:15	1	0	3	2	6
8:15-8:30	3	0	4	0	7
8:30-8:45	5	0	1	0	6
8:45-9:00	5	0	2	1	8
9:00-9:15	0	0	1	2	3
9:15-9:30	6	0	3	2	11
9:30-9:45	1	0	0	0	1
9:45-10:00	6	0	5	2	13
Hours					
7 - 8	5	0	5	0	10
8 - 9	14	0	10	3	27
9 - 10	13	0	9	6	28
TOTAL	32	0	24	9	65

PM PEAK PERIOD

15 Min. Interval	N-LEG	S-LEG	E-LEG	W-LEG	TOTAL
3:00-3:15	1	0	0	0	1
3:15-3:30	4	0	4	2	10
3:30-3:45	1	0	0	0	1
3:45-4:00	0	0	4	0	4
4:00-4:15	2	0	0	0	2
4:15-4:30	4	0	4	0	8
4:30-4:45	4	0	4	0	8
4:45-5:00	5	0	8	0	13
5:00-5:15	6	0	8	2	16
5:15-5:30	3	2	2	0	7
5:30-5:45	1	0	4	0	5
5:45-6:00	0	0	0	0	0
Hours					
3 - 4	6	0	8	2	16
4 - 5	15	0	16	0	31
5 - 6	10	2	14	2	28
	31	2	38	4	75

REMARKS (6 hour total):

	N-LEG	S-LEG	E-LEG	W-LEG	TOTAL
- Wheelchair/special needs assistance	0	1	1	0	2
- Skateboard/scooter	0	4	0	0	4

N: North, **S**: South, **E**: East, **W**: West, **I/S**: Intersection

Source: LADOT 2015 CMP

Counts Unlimited
PO Box 1178
Corona, CA 92878
(951) 268-6268

City of Culver City
N/S: Sepulveda Boulevard
E/W: Slauson Avenue
Weather: Clear

File Name : 05_CVC_Sepulveda_Slauson AM
Site Code : 16618886
Start Date : 11/28/2018
Page No : 1

Groups Printed- Passenger Vehicles - Dual Wheeled - Buses

	Sepulveda Boulevard Southbound				Slauson Avenue Westbound				Sepulveda Boulevard Northbound				Slauson Avenue Eastbound				
Start Time	Left	Thru	Right	App. Total	Left	Thru	Right	App. Total	Left	Thru	Right	App. Total	Left	Thru	Right	App. Total	Int. Total
07:00 AM	15	87	0	102	26	75	50	151	16	468	11	495	7	23	4	34	782
07:15 AM	12	103	1	116	32	65	57	154	16	415	3	434	2	24	4	30	734
07:30 AM	23	163	0	186	24	88	32	144	12	369	4	385	1	24	5	30	745
07:45 AM	30	144	0	174	44	104	67	215	27	351	5	383	8	31	10	49	821
Total	80	497	1	578	126	332	206	664	71	1603	23	1697	18	102	23	143	3082
08:00 AM	38	194	1	233	30	99	65	194	26	304	3	333	7	39	6	52	812
08:15 AM	48	200	7	255	20	97	69	186	24	364	10	398	3	29	12	44	883
08:30 AM	40	140	2	182	31	86	69	186	24	339	7	370	8	65	12	85	823
08:45 AM	35	181	5	221	20	72	54	146	34	377	14	425	6	68	15	89	881
Total	161	715	15	891	101	354	257	712	108	1384	34	1526	24	201	45	270	3399
09:00 AM	54	150	1	205	25	54	52	131	16	385	16	417	8	32	18	58	811
09:15 AM	35	158	3	196	32	48	41	121	17	385	24	426	10	49	11	70	813
09:30 AM	54	144	3	201	20	34	31	85	22	478	22	522	4	37	8	49	857
09:45 AM	52	114	3	169	23	37	27	87	21	438	15	474	8	52	18	78	808
Total	195	566	10	771	100	173	151	424	76	1686	77	1839	30	170	55	255	3289
Grand Total	436	1778	26	2240	327	859	614	1800	255	4673	134	5062	72	473	123	668	9770
Apprch %	19.5	79.4	1.2		18.2	47.7	34.1		5	92.3	2.6		10.8	70.8	18.4		
Total %	4.5	18.2	0.3	22.9	3.3	8.8	6.3	18.4	2.6	47.8	1.4	51.8	0.7	4.8	1.3	6.8	
Passenger Vehicles	408	1725	25	2158	279	810	581	1670	243	4574	127	4944	72	434	118	624	9396
% Passenger Vehicles	93.6	97	96.2	96.3	85.3	94.3	94.6	92.8	95.3	97.9	94.8	97.7	100	91.8	95.9	93.4	96.2
Dual Wheeled	9	36	1	46	7	23	15	45	10	75	6	91	0	8	2	10	192
% Dual Wheeled	2.1	2	3.8	2.1	2.1	2.7	2.4	2.5	3.9	1.6	4.5	1.8	0	1.7	1.6	1.5	2
Buses	19	17	0	36	41	26	18	85	2	24	1	27	0	31	3	34	182
% Buses	4.4	1	0	1.6	12.5	3	2.9	4.7	0.8	0.5	0.7	0.5	0	6.6	2.4	5.1	1.9

	Sepulveda Boulevard Southbound				Slauson Avenue Westbound				Sepulveda Boulevard Northbound				Slauson Avenue Eastbound				
Start Time	Left	Thru	Right	App. Total	Left	Thru	Right	App. Total	Left	Thru	Right	App. Total	Left	Thru	Right	App. Total	Int. Total
Peak Hour Analysis From 07:00 AM to 09:45 AM - Peak 1 of 1																	
Peak Hour for Entire Intersection Begins at 08:00 AM																	
08:00 AM	38	194	1	233	30	**99**	65	**194**	26	304	3	333	7	39	6	52	812
08:15 AM	**48**	**200**	**7**	**255**	20	97	**69**	186	24	364	10	398	3	29	12	44	**883**
08:30 AM	40	140	2	182	**31**	86	69	186	24	339	7	370	**8**	65	12	85	823
08:45 AM	35	181	5	221	20	72	54	146	**34**	**377**	**14**	**425**	6	**68**	**15**	**89**	881
Total Volume	161	715	15	891	101	354	257	712	108	1384	34	1526	24	201	45	270	3399
% App. Total	18.1	80.2	1.7		14.2	49.7	36.1		7.1	90.7	2.2		8.9	74.4	16.7		
PHF	.839	.894	.536	.874	.815	.894	.931	.918	.794	.918	.607	.898	.750	.739	.750	.758	.962

Counts Unlimited
PO Box 1178
Corona, CA 92878
(951) 268-6268

City of Culver City
N/S: Sepulveda Boulevard
E/W: Slauson Avenue
Weather: Clear

File Name : 05_CVC_Sepulveda_Slauson AM
Site Code : 16618886
Start Date : 11/28/2018
Page No : 2

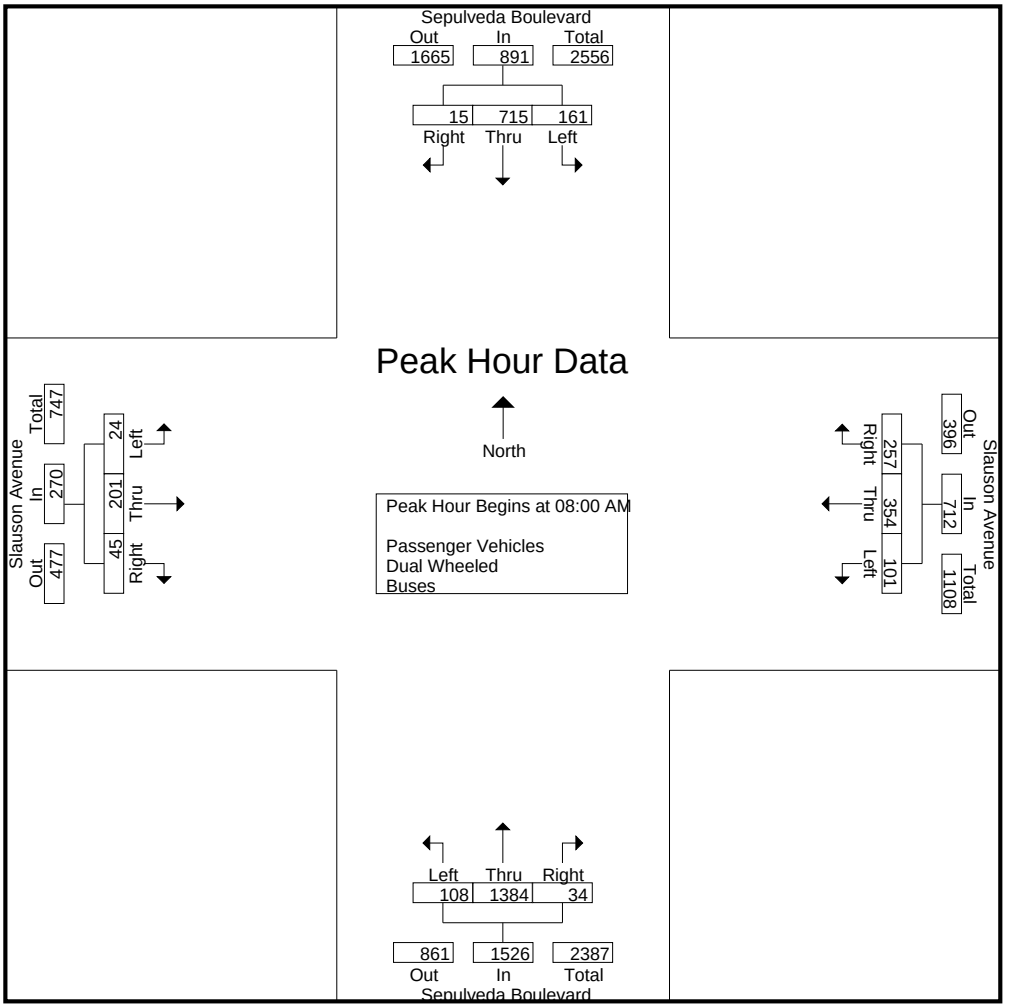

Peak Hour Analysis From 07:00 AM to 09:45 AM - Peak 1 of 1
Peak Hour for Each Approach Begins at:

	08:00 AM				07:45 AM				09:00 AM				08:30 AM			
+0 mins.	38	194	1	233	**44**	**104**	67	**215**	16	385	16	417	8	65	12	85
+15 mins.	**48**	**200**	**7**	**255**	30	99	65	194	17	385	**24**	426	6	**68**	15	**89**
+30 mins.	40	140	2	182	20	97	**69**	186	**22**	**478**	22	**522**	8	32	**18**	58
+45 mins.	35	181	5	221	31	86	69	186	21	438	15	474	**10**	49	11	70
Total Volume	161	715	15	891	125	386	270	781	76	1686	77	1839	32	214	56	302
% App. Total	18.1	80.2	1.7		16	49.4	34.6		4.1	91.7	4.2		10.6	70.9	18.5	
PHF	.839	.894	.536	.874	.710	.928	.978	.908	.864	.882	.802	.881	.800	.787	.778	.848

Counts Unlimited
PO Box 1178
Corona, CA 92878
(951) 268-6268

City of Culver City
N/S: Sepulveda Boulevard
E/W: Slauson Avenue
Weather: Clear

File Name : 05_CVC_Sepulveda_Slauson AM
Site Code : 16618886
Start Date : 11/28/2018
Page No : 1

Groups Printed- Passenger Vehicles

	Sepulveda Boulevard Southbound				Slauson Avenue Westbound				Sepulveda Boulevard Northbound				Slauson Avenue Eastbound				
Start Time	Left	Thru	Right	App. Total	Left	Thru	Right	App. Total	Left	Thru	Right	App. Total	Left	Thru	Right	App. Total	Int. Total
07:00 AM	13	85	0	98	23	70	46	139	15	459	8	482	7	19	4	30	749
07:15 AM	10	98	0	108	30	62	57	149	15	409	3	427	2	21	3	26	710
07:30 AM	22	159	0	181	17	82	30	129	12	361	3	376	1	19	4	24	710
07:45 AM	27	138	0	165	39	101	62	202	26	346	4	376	8	27	9	44	787
Total	72	480	0	552	109	315	195	619	68	1575	18	1661	18	86	20	124	2956
08:00 AM	36	187	1	224	26	96	60	182	25	292	3	320	7	36	6	49	775
08:15 AM	45	193	7	245	16	93	66	175	23	358	10	391	3	27	12	42	853
08:30 AM	39	137	2	178	28	82	65	175	22	333	7	362	8	63	12	83	798
08:45 AM	33	179	5	217	17	68	52	137	32	369	14	415	6	65	15	86	855
Total	153	696	15	864	87	339	243	669	102	1352	34	1488	24	191	45	260	3281
09:00 AM	50	146	1	197	21	46	49	116	13	376	14	403	8	28	17	53	769
09:15 AM	34	153	3	190	27	47	40	114	17	375	24	416	10	47	11	68	788
09:30 AM	48	141	3	192	17	29	29	75	22	467	22	511	4	33	8	45	823
09:45 AM	51	109	3	163	18	34	25	77	21	429	15	465	8	49	17	74	779
Total	183	549	10	742	83	156	143	382	73	1647	75	1795	30	157	53	240	3159
Grand Total	408	1725	25	2158	279	810	581	1670	243	4574	127	4944	72	434	118	624	9396
Apprch %	18.9	79.9	1.2		16.7	48.5	34.8		4.9	92.5	2.6		11.5	69.6	18.9		
Total %	4.3	18.4	0.3	23	3	8.6	6.2	17.8	2.6	48.7	1.4	52.6	0.8	4.6	1.3	6.6	

	Sepulveda Boulevard Southbound				Slauson Avenue Westbound				Sepulveda Boulevard Northbound				Slauson Avenue Eastbound				
Start Time	Left	Thru	Right	App. Total	Left	Thru	Right	App. Total	Left	Thru	Right	App. Total	Left	Thru	Right	App. Total	Int. Total
Peak Hour Analysis From 08:00 AM to 08:45 AM - Peak 1 of 1																	
Peak Hour for Entire Intersection Begins at 08:00 AM																	
08:00 AM	36	187	1	224	26	**96**	60	**182**	25	292	3	320	7	36	6	49	775
08:15 AM	**45**	**193**	**7**	**245**	16	93	**66**	175	23	358	10	391	3	27	12	42	853
08:30 AM	39	137	2	178	**28**	82	65	175	22	333	7	362	**8**	63	12	83	798
08:45 AM	33	179	5	217	17	68	52	137	**32**	**369**	**14**	**415**	6	**65**	**15**	**86**	**855**
Total Volume	153	696	15	864	87	339	243	669	102	1352	34	1488	24	191	45	260	3281
% App. Total	17.7	80.6	1.7		13	50.7	36.3		6.9	90.9	2.3		9.2	73.5	17.3		
PHF	.850	.902	.536	.882	.777	.883	.920	.919	.797	.916	.607	.896	.750	.735	.750	.756	.959

Counts Unlimited
PO Box 1178
Corona, CA 92878
(951) 268-6268

City of Culver City
N/S: Sepulveda Boulevard
E/W: Slauson Avenue
Weather: Clear

File Name : 05_CVC_Sepulveda_Slauson AM
Site Code : 16618886
Start Date : 11/28/2018
Page No : 2

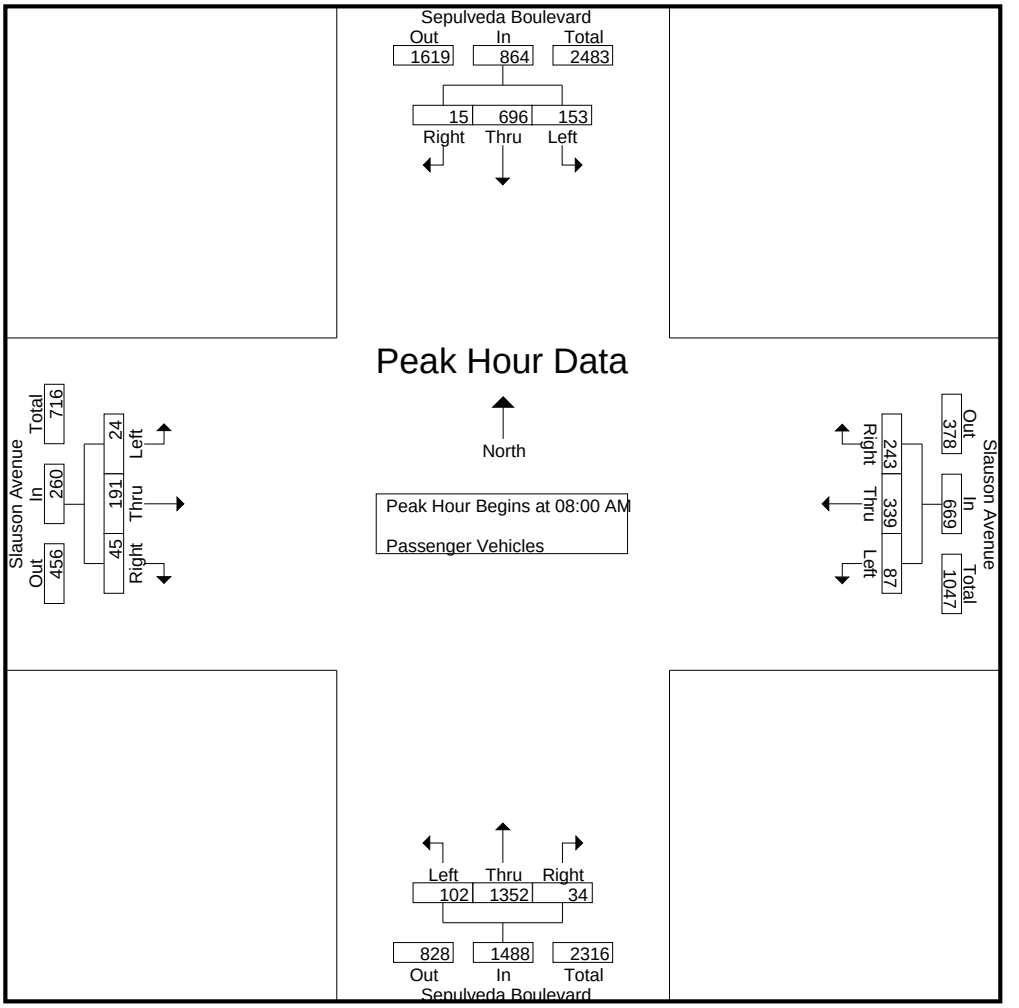

Peak Hour Analysis From 08:00 AM to 08:45 AM - Peak 1 of 1
Peak Hour for Each Approach Begins at:

	08:00 AM				08:00 AM				08:00 AM				08:00 AM			
+0 mins.	36	187	1	224	26	**96**	60	**182**	25	292	3	320	7	36	6	49
+15 mins.	**45**	**193**	**7**	**245**	16	93	**66**	175	23	358	10	391	3	27	12	42
+30 mins.	39	137	2	178	**28**	82	65	175	22	333	7	362	**8**	63	12	83
+45 mins.	33	179	5	217	17	68	52	137	**32**	**369**	**14**	**415**	6	**65**	**15**	**86**
Total Volume	153	696	15	864	87	339	243	669	102	1352	34	1488	24	191	45	260
% App. Total	17.7	80.6	1.7		13	50.7	36.3		6.9	90.9	2.3		9.2	73.5	17.3	
PHF	.850	.902	.536	.882	.777	.883	.920	.919	.797	.916	.607	.896	.750	.735	.750	.756

Counts Unlimited
PO Box 1178
Corona, CA 92878
(951) 268-6268

City of Culver City
N/S: Sepulveda Boulevard
E/W: Slauson Avenue
Weather: Clear

File Name : 05_CVC_Sepulveda_Slauson AM
Site Code : 16618886
Start Date : 11/28/2018
Page No : 1

Groups Printed- Dual Wheeled

	Sepulveda Boulevard Southbound				Slauson Avenue Westbound				Sepulveda Boulevard Northbound				Slauson Avenue Eastbound				
Start Time	Left	Thru	Right	App. Total	Left	Thru	Right	App. Total	Left	Thru	Right	App. Total	Left	Thru	Right	App. Total	Int. Total
07:00 AM	1	0	0	1	0	2	2	4	0	7	2	9	0	0	0	0	14
07:15 AM	1	3	1	5	0	1	0	1	1	4	0	5	0	2	1	3	14
07:30 AM	0	3	0	3	2	4	1	7	0	6	1	7	0	1	1	2	19
07:45 AM	1	2	0	3	1	1	2	4	1	4	1	6	0	2	0	2	15
Total	3	8	1	12	3	8	5	16	2	21	4	27	0	5	2	7	62
08:00 AM	1	6	0	7	0	2	3	5	0	10	0	10	0	1	0	1	23
08:15 AM	0	5	0	5	1	1	1	3	1	4	0	5	0	0	0	0	13
08:30 AM	0	2	0	2	0	2	3	5	2	3	0	5	0	0	0	0	12
08:45 AM	0	1	0	1	0	3	0	3	2	4	0	6	0	0	0	0	10
Total	1	14	0	15	1	8	7	16	5	21	0	26	0	1	0	1	58
09:00 AM	1	4	0	5	0	3	1	4	3	8	2	13	0	1	0	1	23
09:15 AM	0	3	0	3	2	0	0	2	0	8	0	8	0	0	0	0	13
09:30 AM	4	2	0	6	1	2	1	4	0	9	0	9	0	1	0	1	20
09:45 AM	0	5	0	5	0	2	1	3	0	8	0	8	0	0	0	0	16
Total	5	14	0	19	3	7	3	13	3	33	2	38	0	2	0	2	72
Grand Total	9	36	1	46	7	23	15	45	10	75	6	91	0	8	2	10	192
Apprch %	19.6	78.3	2.2		15.6	51.1	33.3		11	82.4	6.6		0	80	20		
Total %	4.7	18.8	0.5	24	3.6	12	7.8	23.4	5.2	39.1	3.1	47.4	0	4.2	1	5.2	

	Sepulveda Boulevard Southbound				Slauson Avenue Westbound				Sepulveda Boulevard Northbound				Slauson Avenue Eastbound				
Start Time	Left	Thru	Right	App. Total	Left	Thru	Right	App. Total	Left	Thru	Right	App. Total	Left	Thru	Right	App. Total	Int. Total
Peak Hour Analysis From 08:00 AM to 08:45 AM - Peak 1 of 1																	
Peak Hour for Entire Intersection Begins at 08:00 AM																	
08:00 AM	**1**	**6**	0	**7**	0	2	**3**	**5**	0	**10**	0	**10**	0	**1**	0	**1**	**23**
08:15 AM	0	5	0	5	**1**	1	1	3	1	4	0	5	0	0	0	0	13
08:30 AM	0	2	0	2	0	2	3	5	**2**	3	0	5	0	0	0	0	12
08:45 AM	0	1	0	1	0	**3**	0	3	2	4	0	6	0	0	0	0	10
Total Volume	1	14	0	15	1	8	7	16	5	21	0	26	0	1	0	1	58
% App. Total	6.7	93.3	0		6.2	50	43.8		19.2	80.8	0		0	100	0		
PHF	.250	.583	.000	.536	.250	.667	.583	.800	.625	.525	.000	.650	.000	.250	.000	.250	.630

Counts Unlimited
PO Box 1178
Corona, CA 92878
(951) 268-6268

City of Culver City
N/S: Sepulveda Boulevard
E/W: Slauson Avenue
Weather: Clear

File Name : 05_CVC_Sepulveda_Slauson AM
Site Code : 16618886
Start Date : 11/28/2018
Page No : 2

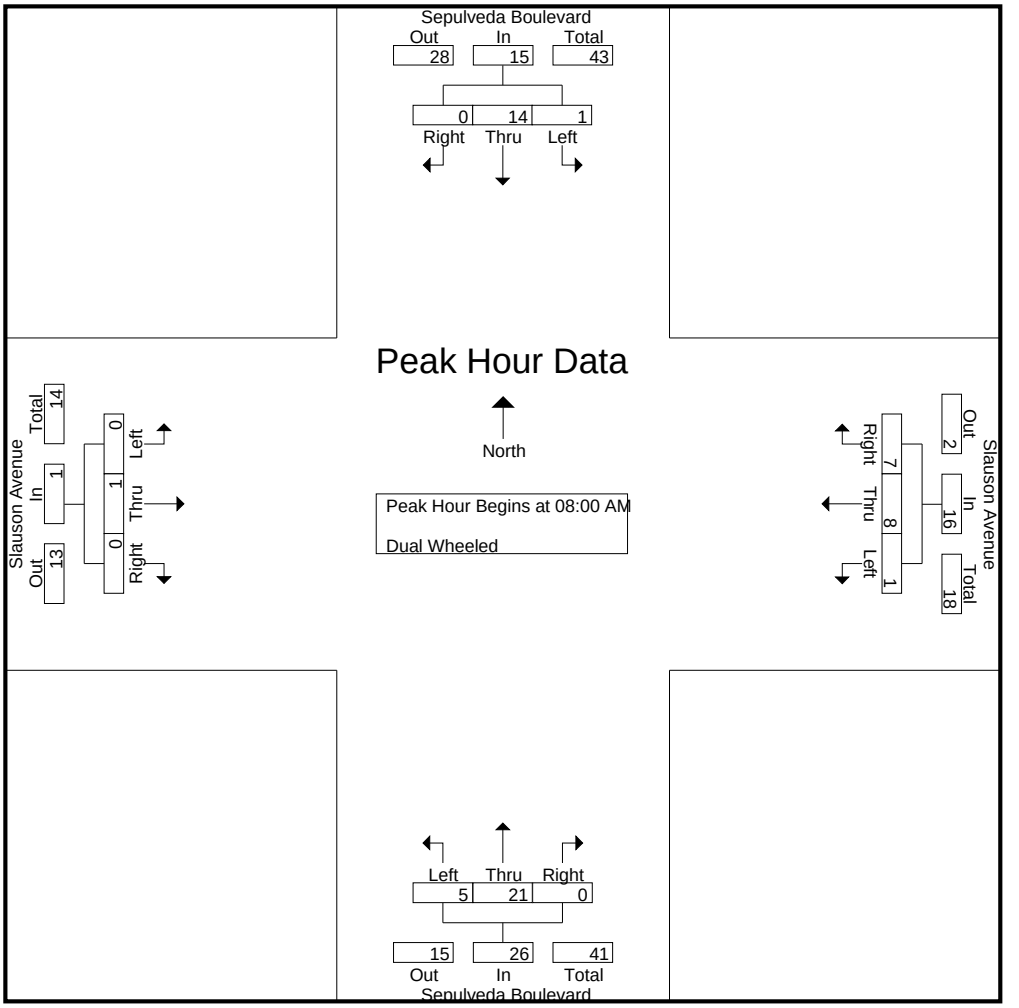

Peak Hour Analysis From 08:00 AM to 08:45 AM - Peak 1 of 1
Peak Hour for Each Approach Begins at:

	08:00 AM				08:00 AM				08:00 AM				08:00 AM			
+0 mins.	**1**	**6**	0	**7**	0	2	**3**	**5**	0	**10**	0	**10**	0	**1**	0	**1**
+15 mins.	0	5	0	5	**1**	1	1	3	1	4	0	5	0	0	0	0
+30 mins.	0	2	0	2	0	2	3	5	**2**	3	0	5	0	0	0	0
+45 mins.	0	1	0	1	0	**3**	0	3	2	4	0	6	0	0	0	0
Total Volume	1	14	0	15	1	8	7	16	5	21	0	26	0	1	0	1
% App. Total	6.7	93.3	0		6.2	50	43.8		19.2	80.8	0		0	100	0	
PHF	.250	.583	.000	.536	.250	.667	.583	.800	.625	.525	.000	.650	.000	.250	.000	.250

Counts Unlimited
PO Box 1178
Corona, CA 92878
(951) 268-6268

City of Culver City
N/S: Sepulveda Boulevard
E/W: Slauson Avenue
Weather: Clear

File Name : 05_CVC_Sepulveda_Slauson AM
Site Code : 16618886
Start Date : 11/28/2018
Page No : 1

Groups Printed- Buses

	Sepulveda Boulevard Southbound				Slauson Avenue Westbound				Sepulveda Boulevard Northbound				Slauson Avenue Eastbound				
Start Time	Left	Thru	Right	App. Total	Left	Thru	Right	App. Total	Left	Thru	Right	App. Total	Left	Thru	Right	App. Total	Int. Total
07:00 AM	1	2	0	3	3	3	2	8	1	2	1	4	0	4	0	4	19
07:15 AM	1	2	0	3	2	2	0	4	0	2	0	2	0	1	0	1	10
07:30 AM	1	1	0	2	5	2	1	8	0	2	0	2	0	4	0	4	16
07:45 AM	2	4	0	6	4	2	3	9	0	1	0	1	0	2	1	3	19
Total	5	9	0	14	14	9	6	29	1	7	1	9	0	11	1	12	64
08:00 AM	1	1	0	2	4	1	2	7	1	2	0	3	0	2	0	2	14
08:15 AM	3	2	0	5	3	3	2	8	0	2	0	2	0	2	0	2	17
08:30 AM	1	1	0	2	3	2	1	6	0	3	0	3	0	2	0	2	13
08:45 AM	2	1	0	3	3	1	2	6	0	4	0	4	0	3	0	3	16
Total	7	5	0	12	13	7	7	27	1	11	0	12	0	9	0	9	60
09:00 AM	3	0	0	3	4	5	2	11	0	1	0	1	0	3	1	4	19
09:15 AM	1	2	0	3	3	1	1	5	0	2	0	2	0	2	0	2	12
09:30 AM	2	1	0	3	2	3	1	6	0	2	0	2	0	3	0	3	14
09:45 AM	1	0	0	1	5	1	1	7	0	1	0	1	0	3	1	4	13
Total	7	3	0	10	14	10	5	29	0	6	0	6	0	11	2	13	58
Grand Total	19	17	0	36	41	26	18	85	2	24	1	27	0	31	3	34	182
Apprch %	52.8	47.2	0		48.2	30.6	21.2		7.4	88.9	3.7		0	91.2	8.8		
Total %	10.4	9.3	0	19.8	22.5	14.3	9.9	46.7	1.1	13.2	0.5	14.8	0	17	1.6	18.7	

	Sepulveda Boulevard Southbound				Slauson Avenue Westbound				Sepulveda Boulevard Northbound				Slauson Avenue Eastbound				
Start Time	Left	Thru	Right	App. Total	Left	Thru	Right	App. Total	Left	Thru	Right	App. Total	Left	Thru	Right	App. Total	Int. Total
Peak Hour Analysis From 08:00 AM to 08:45 AM - Peak 1 of 1																	
Peak Hour for Entire Intersection Begins at 08:00 AM																	
08:00 AM	1	1	0	2	**4**	1	**2**	7	**1**	2	0	3	0	2	0	2	14
08:15 AM	**3**	**2**	0	**5**	3	**3**	2	**8**	0	2	0	2	0	2	0	2	**17**
08:30 AM	1	1	0	2	3	2	1	6	0	3	0	3	0	2	0	2	13
08:45 AM	2	1	0	3	3	1	2	6	0	**4**	0	**4**	0	**3**	0	**3**	16
Total Volume	7	5	0	12	13	7	7	27	1	11	0	12	0	9	0	9	60
% App. Total	58.3	41.7	0		48.1	25.9	25.9		8.3	91.7	0		0	100	0		
PHF	.583	.625	.000	.600	.813	.583	.875	.844	.250	.688	.000	.750	.000	.750	.000	.750	.882

Counts Unlimited
PO Box 1178
Corona, CA 92878
(951) 268-6268

City of Culver City
N/S: Sepulveda Boulevard
E/W: Slauson Avenue
Weather: Clear

File Name : 05_CVC_Sepulveda_Slauson AM
Site Code : 16618886
Start Date : 11/28/2018
Page No : 2

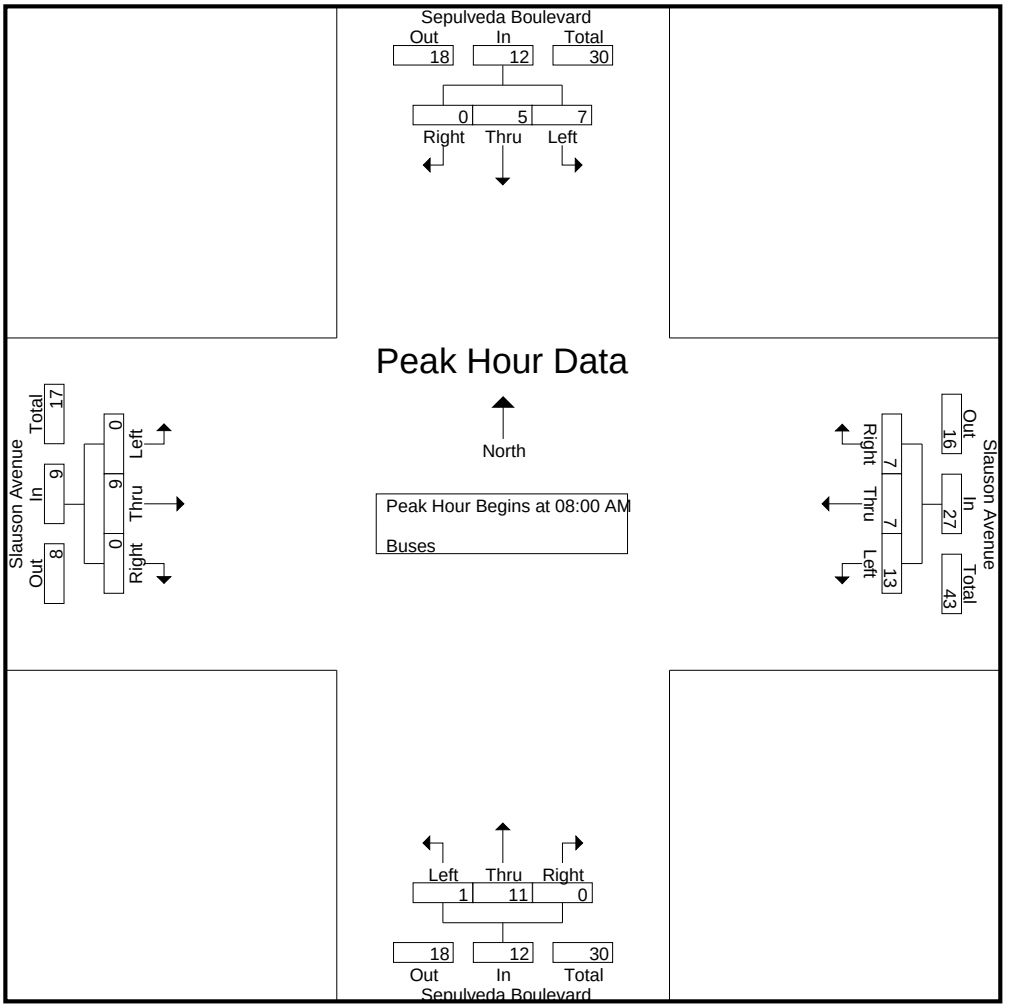

Peak Hour Analysis From 08:00 AM to 08:45 AM - Peak 1 of 1
Peak Hour for Each Approach Begins at:

	08:00 AM				08:00 AM				08:00 AM				08:00 AM			
+0 mins.	1	1	0	2	**4**	1	**2**	7	**1**	2	0	3	0	2	0	2
+15 mins.	**3**	**2**	0	**5**	3	**3**	2	**8**	0	2	0	2	0	2	0	2
+30 mins.	1	1	0	2	3	2	1	6	0	3	0	3	0	2	0	2
+45 mins.	2	1	0	3	3	1	2	6	0	**4**	0	**4**	0	**3**	0	**3**
Total Volume	7	5	0	12	13	7	7	27	1	11	0	12	0	9	0	9
% App. Total	58.3	41.7	0		48.1	25.9	25.9		8.3	91.7	0		0	100	0	
PHF	.583	.625	.000	.600	.813	.583	.875	.844	.250	.688	.000	.750	.000	.750	.000	.750

Counts Unlimited
PO Box 1178
Corona, CA 92878
(951) 268-6268

City of Culver City
N/S: Sepulveda Boulevard
E/W: Slauson Avenue
Weather: Clear

File Name : 05_CVC_Sepulveda_Slauson PM
Site Code : 16618886
Start Date : 11/28/2018
Page No : 1

Groups Printed- Passenger Vehicles - Dual Wheeled - Buses

	Sepulveda Boulevard Southbound				Slauson Avenue Westbound				Sepulveda Boulevard Northbound				Slauson Avenue Eastbound				
Start Time	Left	Thru	Right	App. Total	Left	Thru	Right	App. Total	Left	Thru	Right	App. Total	Left	Thru	Right	App. Total	Int. Total
03:00 PM	78	248	7	333	46	61	36	143	30	233	20	283	8	62	19	89	848
03:15 PM	82	266	1	349	42	65	57	164	25	225	18	268	9	59	21	89	870
03:30 PM	68	319	5	392	50	59	46	155	28	272	18	318	9	74	29	112	977
03:45 PM	77	318	5	400	38	65	57	160	24	247	23	294	9	86	23	118	972
Total	305	1151	18	1474	176	250	196	622	107	977	79	1163	35	281	92	408	3667
04:00 PM	68	298	6	372	54	82	70	206	36	280	23	339	8	62	30	100	1017
04:15 PM	65	386	9	460	36	73	51	160	21	236	19	276	13	63	13	89	985
04:30 PM	51	368	5	424	48	53	55	156	16	264	24	304	9	99	22	130	1014
04:45 PM	68	354	4	426	60	58	42	160	27	285	12	324	13	49	34	96	1006
Total	252	1406	24	1682	198	266	218	682	100	1065	78	1243	43	273	99	415	4022
05:00 PM	50	341	1	392	51	78	56	185	24	261	21	306	8	96	24	128	1011
05:15 PM	36	305	2	343	46	56	53	155	35	322	23	380	6	54	33	93	971
05:30 PM	59	357	2	418	47	62	41	150	23	295	17	335	13	88	26	127	1030
05:45 PM	56	319	2	377	48	70	43	161	30	253	21	304	7	67	38	112	954
Total	201	1322	7	1530	192	266	193	651	112	1131	82	1325	34	305	121	460	3966
Grand Total	758	3879	49	4686	566	782	607	1955	319	3173	239	3731	112	859	312	1283	11655
Apprch %	16.2	82.8	1		29	40	31		8.5	85	6.4		8.7	67	24.3		
Total %	6.5	33.3	0.4	40.2	4.9	6.7	5.2	16.8	2.7	27.2	2.1	32	1	7.4	2.7	11	
Passenger Vehicles	742	3824	47	4613	518	748	591	1857	311	3141	235	3687	112	815	308	1235	11392
% Passenger Vehicles	97.9	98.6	95.9	98.4	91.5	95.7	97.4	95	97.5	99	98.3	98.8	100	94.9	98.7	96.3	97.7
Dual Wheeled	3	33	2	38	2	11	6	19	3	16	3	22	0	6	2	8	87
% Dual Wheeled	0.4	0.9	4.1	0.8	0.4	1.4	1	1	0.9	0.5	1.3	0.6	0	0.7	0.6	0.6	0.7
Buses	13	22	0	35	46	23	10	79	5	16	1	22	0	38	2	40	176
% Buses	1.7	0.6	0	0.7	8.1	2.9	1.6	4	1.6	0.5	0.4	0.6	0	4.4	0.6	3.1	1.5

	Sepulveda Boulevard Southbound				Slauson Avenue Westbound				Sepulveda Boulevard Northbound				Slauson Avenue Eastbound				
Start Time	Left	Thru	Right	App. Total	Left	Thru	Right	App. Total	Left	Thru	Right	App. Total	Left	Thru	Right	App. Total	Int. Total
Peak Hour Analysis From 03:00 PM to 05:45 PM - Peak 1 of 1																	
Peak Hour for Entire Intersection Begins at 04:00 PM																	
04:00 PM	**68**	298	6	372	54	**82**	**70**	**206**	**36**	280	23	**339**	8	62	30	100	**1017**
04:15 PM	65	**386**	**9**	**460**	36	73	51	160	21	236	19	276	**13**	63	13	89	985
04:30 PM	51	368	5	424	48	53	55	156	16	264	**24**	304	9	**99**	22	**130**	1014
04:45 PM	68	354	4	426	**60**	58	42	160	27	**285**	12	324	13	49	**34**	96	1006
Total Volume	252	1406	24	1682	198	266	218	682	100	1065	78	1243	43	273	99	415	4022
% App. Total	15	83.6	1.4		29	39	32		8	85.7	6.3		10.4	65.8	23.9		
PHF	.926	.911	.667	.914	.825	.811	.779	.828	.694	.934	.813	.917	.827	.689	.728	.798	.989

Counts Unlimited
PO Box 1178
Corona, CA 92878
(951) 268-6268

City of Culver City
N/S: Sepulveda Boulevard
E/W: Slauson Avenue
Weather: Clear

File Name : 05_CVC_Sepulveda_Slauson PM
Site Code : 16618886
Start Date : 11/28/2018
Page No : 2

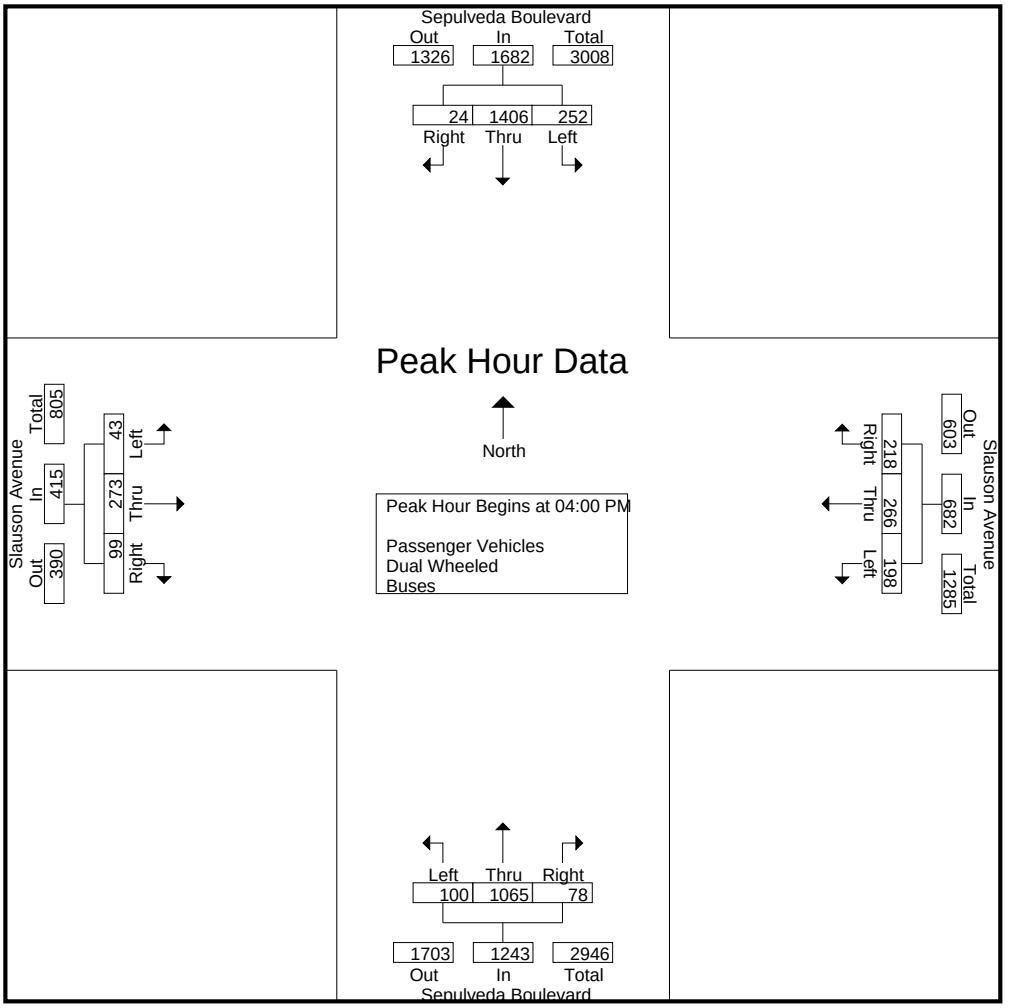

Peak Hour Analysis From 03:00 PM to 05:45 PM - Peak 1 of 1
Peak Hour for Each Approach Begins at:

	04:15 PM				03:15 PM				04:45 PM				05:00 PM			
+0 mins.	65	**386**	**9**	**460**	42	65	57	164	27	285	12	324	8	**96**	24	**128**
+15 mins.	51	368	5	424	50	59	46	155	24	261	21	306	6	54	33	93
+30 mins.	**68**	354	4	426	38	65	57	160	**35**	**322**	**23**	**380**	**13**	88	26	127
+45 mins.	50	341	1	392	**54**	**82**	**70**	**206**	23	295	17	335	7	67	**38**	112
Total Volume	234	1449	19	1702	184	271	230	685	109	1163	73	1345	34	305	121	460
% App. Total	13.7	85.1	1.1		26.9	39.6	33.6		8.1	86.5	5.4		7.4	66.3	26.3	
PHF	.860	.938	.528	.925	.852	.826	.821	.831	.779	.903	.793	.885	.654	.794	.796	.898

Counts Unlimited
PO Box 1178
Corona, CA 92878
(951) 268-6268

City of Culver City
N/S: Sepulveda Boulevard
E/W: Slauson Avenue
Weather: Clear

File Name : 05_CVC_Sepulveda_Slauson PM
Site Code : 16618886
Start Date : 11/28/2018
Page No : 1

Groups Printed- Passenger Vehicles

	Sepulveda Boulevard Southbound				Slauson Avenue Westbound				Sepulveda Boulevard Northbound				Slauson Avenue Eastbound				
Start Time	Left	Thru	Right	App. Total	Left	Thru	Right	App. Total	Left	Thru	Right	App. Total	Left	Thru	Right	App. Total	Int. Total
03:00 PM	77	243	5	325	41	59	34	134	27	229	20	276	8	59	19	86	821
03:15 PM	81	263	1	345	37	61	57	155	24	221	18	263	9	55	21	85	848
03:30 PM	66	315	5	386	46	57	46	149	28	268	16	312	9	69	29	107	954
03:45 PM	75	312	5	392	34	63	55	152	24	244	23	291	9	79	23	111	946
Total	299	1133	16	1448	158	240	192	590	103	962	77	1142	35	262	92	389	3569
04:00 PM	67	289	6	362	49	79	69	197	33	278	23	334	8	60	29	97	990
04:15 PM	63	381	9	453	34	68	50	152	21	232	18	271	13	60	12	85	961
04:30 PM	49	365	5	419	44	51	52	147	16	261	23	300	9	93	22	124	990
04:45 PM	67	351	4	422	56	53	42	151	27	283	12	322	13	46	33	92	987
Total	246	1386	24	1656	183	251	213	647	97	1054	76	1227	43	259	96	398	3928
05:00 PM	48	337	1	386	48	75	54	177	24	260	21	305	8	94	23	125	993
05:15 PM	36	300	2	338	40	55	50	145	34	320	23	377	6	50	33	89	949
05:30 PM	58	353	2	413	46	59	40	145	23	295	17	335	13	86	26	125	1018
05:45 PM	55	315	2	372	43	68	42	153	30	250	21	301	7	64	38	109	935
Total	197	1305	7	1509	177	257	186	620	111	1125	82	1318	34	294	120	448	3895
Grand Total	742	3824	47	4613	518	748	591	1857	311	3141	235	3687	112	815	308	1235	11392
Apprch %	16.1	82.9	1		27.9	40.3	31.8		8.4	85.2	6.4		9.1	66	24.9		
Total %	6.5	33.6	0.4	40.5	4.5	6.6	5.2	16.3	2.7	27.6	2.1	32.4	1	7.2	2.7	10.8	

	Sepulveda Boulevard Southbound				Slauson Avenue Westbound				Sepulveda Boulevard Northbound				Slauson Avenue Eastbound				
Start Time	Left	Thru	Right	App. Total	Left	Thru	Right	App. Total	Left	Thru	Right	App. Total	Left	Thru	Right	App. Total	Int. Total
Peak Hour Analysis From 04:00 PM to 04:45 PM - Peak 1 of 1																	
Peak Hour for Entire Intersection Begins at 04:00 PM																	
04:00 PM	**67**	289	6	362	49	**79**	**69**	**197**	**33**	278	**23**	**334**	8	60	29	97	**990**
04:15 PM	63	**381**	**9**	**453**	34	68	50	152	21	232	18	271	**13**	60	12	85	961
04:30 PM	49	365	5	419	44	51	52	147	16	261	23	300	9	**93**	22	**124**	990
04:45 PM	67	351	4	422	**56**	53	42	151	27	**283**	12	322	13	46	**33**	92	987
Total Volume	246	1386	24	1656	183	251	213	647	97	1054	76	1227	43	259	96	398	3928
% App. Total	14.9	83.7	1.4		28.3	38.8	32.9		7.9	85.9	6.2		10.8	65.1	24.1		
PHF	.918	.909	.667	.914	.817	.794	.772	.821	.735	.931	.826	.918	.827	.696	.727	.802	.992

Counts Unlimited
PO Box 1178
Corona, CA 92878
(951) 268-6268

City of Culver City
N/S: Sepulveda Boulevard
E/W: Slauson Avenue
Weather: Clear

File Name : 05_CVC_Sepulveda_Slauson PM
Site Code : 16618886
Start Date : 11/28/2018
Page No : 2

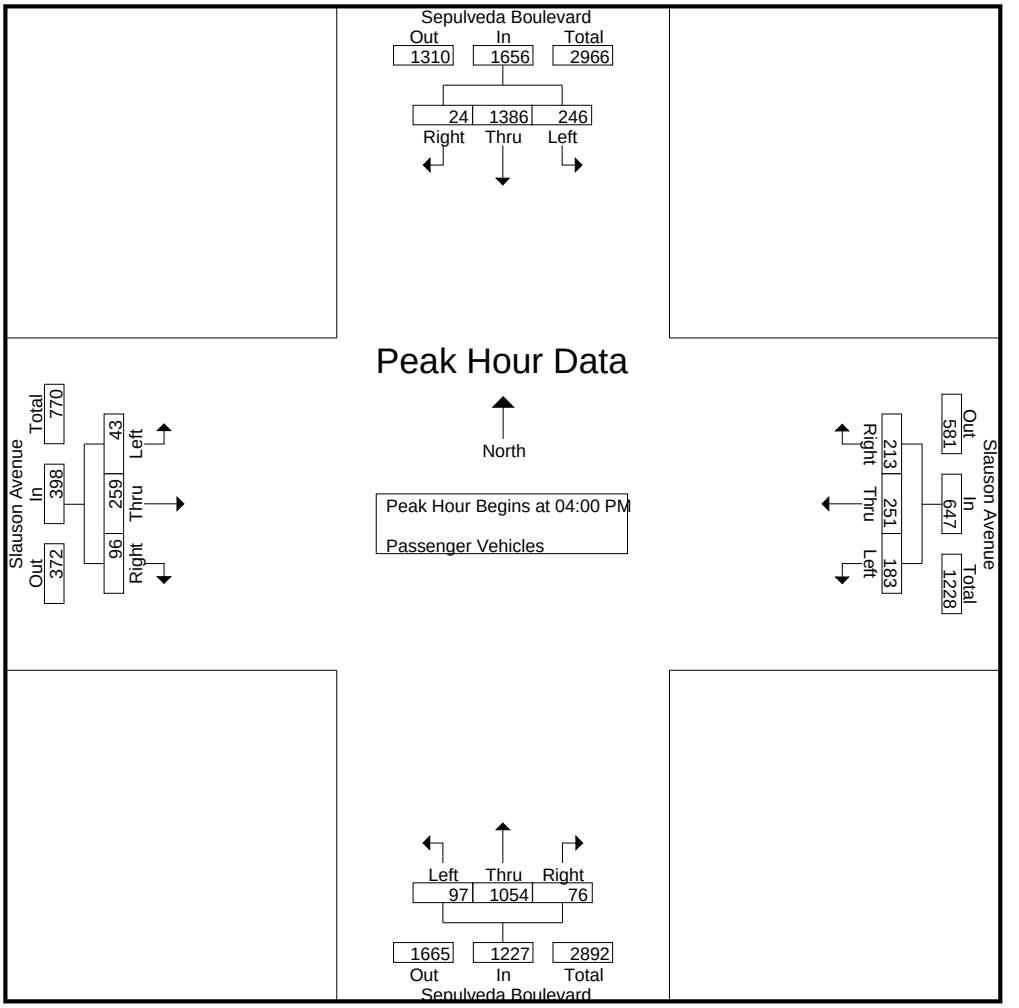

Peak Hour Analysis From 04:00 PM to 04:45 PM - Peak 1 of 1
Peak Hour for Each Approach Begins at:

	04:00 PM				04:00 PM				04:00 PM				04:00 PM			
+0 mins.	**67**	289	6	362	49	**79**	**69**	**197**	**33**	278	**23**	**334**	8	60	29	97
+15 mins.	63	**381**	**9**	**453**	34	68	50	152	21	232	18	271	**13**	60	12	85
+30 mins.	49	365	5	419	44	51	52	147	16	261	23	300	9	**93**	22	**124**
+45 mins.	67	351	4	422	**56**	53	42	151	27	**283**	12	322	13	46	**33**	92
Total Volume	246	1386	24	1656	183	251	213	647	97	1054	76	1227	43	259	96	398
% App. Total	14.9	83.7	1.4		28.3	38.8	32.9		7.9	85.9	6.2		10.8	65.1	24.1	
PHF	.918	.909	.667	.914	.817	.794	.772	.821	.735	.931	.826	.918	.827	.696	.727	.802

Counts Unlimited
PO Box 1178
Corona, CA 92878
(951) 268-6268

City of Culver City
N/S: Sepulveda Boulevard
E/W: Slauson Avenue
Weather: Clear

File Name : 05_CVC_Sepulveda_Slauson PM
Site Code : 16618886
Start Date : 11/28/2018
Page No : 1

Groups Printed- Dual Wheeled

	Sepulveda Boulevard Southbound				Slauson Avenue Westbound				Sepulveda Boulevard Northbound				Slauson Avenue Eastbound				
Start Time	Left	Thru	Right	App. Total	Left	Thru	Right	App. Total	Left	Thru	Right	App. Total	Left	Thru	Right	App. Total	Int. Total
03:00 PM	0	4	2	6	0	1	0	1	1	1	0	2	0	0	0	0	9
03:15 PM	0	2	0	2	0	1	0	1	1	3	0	4	0	2	0	2	9
03:30 PM	0	2	0	2	0	0	0	0	0	3	1	4	0	1	0	1	7
03:45 PM	1	3	0	4	1	0	1	2	0	2	0	2	0	1	0	1	9
Total	1	11	2	14	1	2	1	4	2	9	1	12	0	4	0	4	34
04:00 PM	0	4	0	4	0	2	1	3	1	1	0	2	0	0	0	0	9
04:15 PM	0	3	0	3	0	1	0	1	0	3	1	4	0	1	0	1	9
04:30 PM	1	1	0	2	0	0	1	1	0	0	1	1	0	1	0	1	5
04:45 PM	0	3	0	3	0	3	0	3	0	0	0	0	0	0	1	1	7
Total	1	11	0	12	0	6	2	8	1	4	2	7	0	2	1	3	30
05:00 PM	0	2	0	2	0	1	1	2	0	0	0	0	0	0	1	1	5
05:15 PM	0	5	0	5	1	0	1	2	0	1	0	1	0	0	0	0	8
05:30 PM	1	2	0	3	0	1	1	2	0	0	0	0	0	0	0	0	5
05:45 PM	0	2	0	2	0	1	0	1	0	2	0	2	0	0	0	0	5
Total	1	11	0	12	1	3	3	7	0	3	0	3	0	0	1	1	23
Grand Total	3	33	2	38	2	11	6	19	3	16	3	22	0	6	2	8	87
Apprch %	7.9	86.8	5.3		10.5	57.9	31.6		13.6	72.7	13.6		0	75	25		
Total %	3.4	37.9	2.3	43.7	2.3	12.6	6.9	21.8	3.4	18.4	3.4	25.3	0	6.9	2.3	9.2	

	Sepulveda Boulevard Southbound				Slauson Avenue Westbound				Sepulveda Boulevard Northbound				Slauson Avenue Eastbound				
Start Time	Left	Thru	Right	App. Total	Left	Thru	Right	App. Total	Left	Thru	Right	App. Total	Left	Thru	Right	App. Total	Int. Total
Peak Hour Analysis From 04:00 PM to 04:45 PM - Peak 1 of 1																	
Peak Hour for Entire Intersection Begins at 04:00 PM																	
04:00 PM	0	**4**	0	**4**	0	2	**1**	**3**	**1**	1	0	2	0	0	0	0	**9**
04:15 PM	0	3	0	3	0	1	0	1	0	**3**	**1**	**4**	0	**1**	0	**1**	9
04:30 PM	**1**	1	0	2	0	0	1	1	0	0	1	1	0	1	0	1	5
04:45 PM	0	3	0	3	0	**3**	0	3	0	0	0	0	0	0	**1**	1	7
Total Volume	1	11	0	12	0	6	2	8	1	4	2	7	0	2	1	3	30
% App. Total	8.3	91.7	0		0	75	25		14.3	57.1	28.6		0	66.7	33.3		
PHF	.250	.688	.000	.750	.000	.500	.500	.667	.250	.333	.500	.438	.000	.500	.250	.750	.833

Counts Unlimited
PO Box 1178
Corona, CA 92878
(951) 268-6268

City of Culver City
N/S: Sepulveda Boulevard
E/W: Slauson Avenue
Weather: Clear

File Name : 05_CVC_Sepulveda_Slauson PM
Site Code : 16618886
Start Date : 11/28/2018
Page No : 2

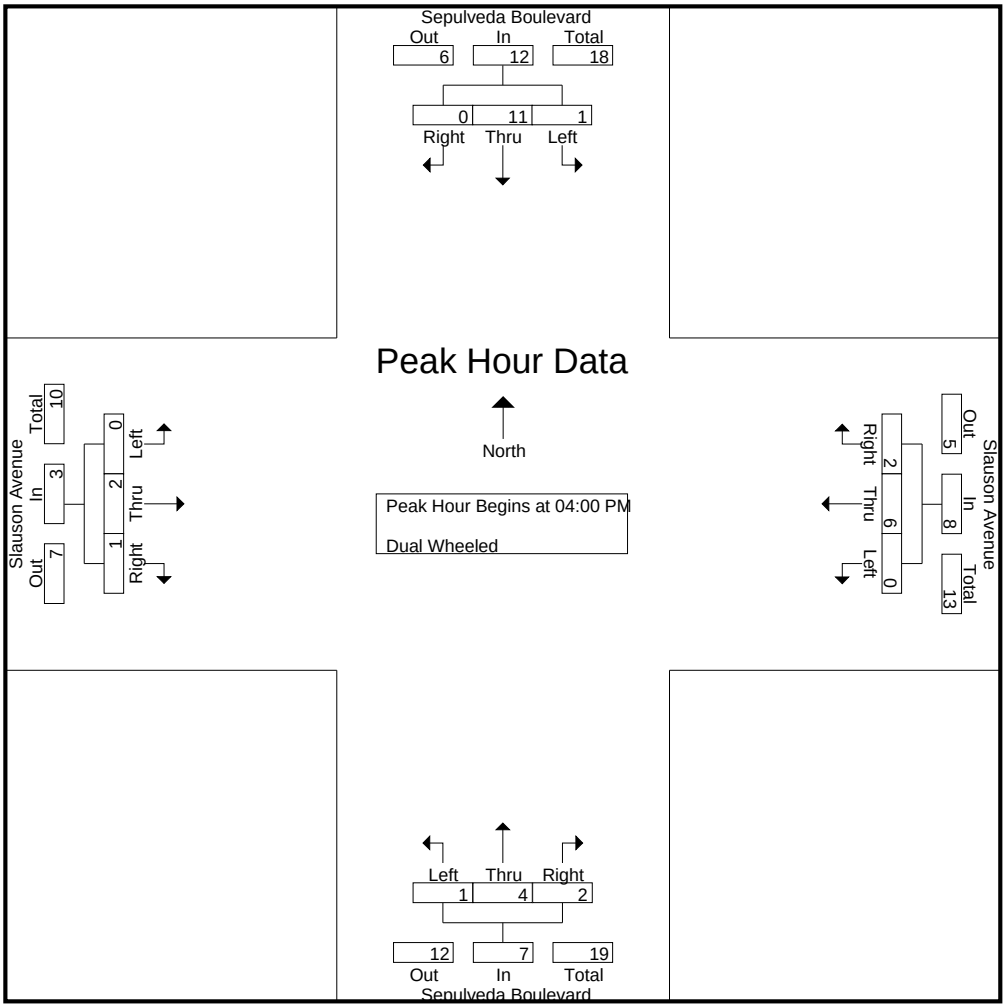

Peak Hour Analysis From 04:00 PM to 04:45 PM - Peak 1 of 1
Peak Hour for Each Approach Begins at:

	04:00 PM				04:00 PM				04:00 PM				04:00 PM			
+0 mins.	0	**4**	0	**4**	0	2	**1**	**3**	**1**	1	0	2	0	0	0	0
+15 mins.	0	3	0	3	0	1	0	1	0	**3**	**1**	**4**	0	**1**	0	**1**
+30 mins.	**1**	1	0	2	0	0	1	1	0	0	1	1	0	1	0	1
+45 mins.	0	3	0	3	0	**3**	0	3	0	0	0	0	0	0	**1**	1
Total Volume	1	11	0	12	0	6	2	8	1	4	2	7	0	2	1	3
% App. Total	8.3	91.7	0		0	75	25		14.3	57.1	28.6		0	66.7	33.3	
PHF	.250	.688	.000	.750	.000	.500	.500	.667	.250	.333	.500	.438	.000	.500	.250	.750

Counts Unlimited
PO Box 1178
Corona, CA 92878
(951) 268-6268

City of Culver City
N/S: Sepulveda Boulevard
E/W: Slauson Avenue
Weather: Clear

File Name : 05_CVC_Sepulveda_Slauson PM
Site Code : 16618886
Start Date : 11/28/2018
Page No : 1

Groups Printed- Buses

	Sepulveda Boulevard Southbound				Slauson Avenue Westbound				Sepulveda Boulevard Northbound				Slauson Avenue Eastbound				
Start Time	Left	Thru	Right	App. Total	Left	Thru	Right	App. Total	Left	Thru	Right	App. Total	Left	Thru	Right	App. Total	Int. Total
03:00 PM	1	1	0	2	5	1	2	8	2	3	0	5	0	3	0	3	18
03:15 PM	1	1	0	2	5	3	0	8	0	1	0	1	0	2	0	2	13
03:30 PM	2	2	0	4	4	2	0	6	0	1	1	2	0	4	0	4	16
03:45 PM	1	3	0	4	3	2	1	6	0	1	0	1	0	6	0	6	17
Total	5	7	0	12	17	8	3	28	2	6	1	9	0	15	0	15	64
04:00 PM	1	5	0	6	5	1	0	6	2	1	0	3	0	2	1	3	18
04:15 PM	2	2	0	4	2	4	1	7	0	1	0	1	0	2	1	3	15
04:30 PM	1	2	0	3	4	2	2	8	0	3	0	3	0	5	0	5	19
04:45 PM	1	0	0	1	4	2	0	6	0	2	0	2	0	3	0	3	12
Total	5	9	0	14	15	9	3	27	2	7	0	9	0	12	2	14	64
05:00 PM	2	2	0	4	3	2	1	6	0	1	0	1	0	2	0	2	13
05:15 PM	0	0	0	0	5	1	2	8	1	1	0	2	0	4	0	4	14
05:30 PM	0	2	0	2	1	2	0	3	0	0	0	0	0	2	0	2	7
05:45 PM	1	2	0	3	5	1	1	7	0	1	0	1	0	3	0	3	14
Total	3	6	0	9	14	6	4	24	1	3	0	4	0	11	0	11	48
Grand Total	13	22	0	35	46	23	10	79	5	16	1	22	0	38	2	40	176
Apprch %	37.1	62.9	0		58.2	29.1	12.7		22.7	72.7	4.5		0	95	5		
Total %	7.4	12.5	0	19.9	26.1	13.1	5.7	44.9	2.8	9.1	0.6	12.5	0	21.6	1.1	22.7	

	Sepulveda Boulevard Southbound				Slauson Avenue Westbound				Sepulveda Boulevard Northbound				Slauson Avenue Eastbound				
Start Time	Left	Thru	Right	App. Total	Left	Thru	Right	App. Total	Left	Thru	Right	App. Total	Left	Thru	Right	App. Total	Int. Total
Peak Hour Analysis From 04:00 PM to 04:45 PM - Peak 1 of 1																	
Peak Hour for Entire Intersection Begins at 04:00 PM																	
04:00 PM	1	**5**	0	**6**	**5**	1	0	6	**2**	1	0	**3**	0	2	**1**	3	18
04:15 PM	**2**	2	0	4	2	**4**	1	7	0	1	0	1	0	2	1	3	15
04:30 PM	1	2	0	3	4	2	**2**	**8**	0	**3**	0	3	0	**5**	0	**5**	**19**
04:45 PM	1	0	0	1	4	2	0	6	0	2	0	2	0	3	0	3	12
Total Volume	5	9	0	14	15	9	3	27	2	7	0	9	0	12	2	14	64
% App. Total	35.7	64.3	0		55.6	33.3	11.1		22.2	77.8	0		0	85.7	14.3		
PHF	.625	.450	.000	.583	.750	.563	.375	.844	.250	.583	.000	.750	.000	.600	.500	.700	.842

Counts Unlimited
PO Box 1178
Corona, CA 92878
(951) 268-6268

City of Culver City
N/S: Sepulveda Boulevard
E/W: Slauson Avenue
Weather: Clear

File Name : 05_CVC_Sepulveda_Slauson PM
Site Code : 16618886
Start Date : 11/28/2018
Page No : 2

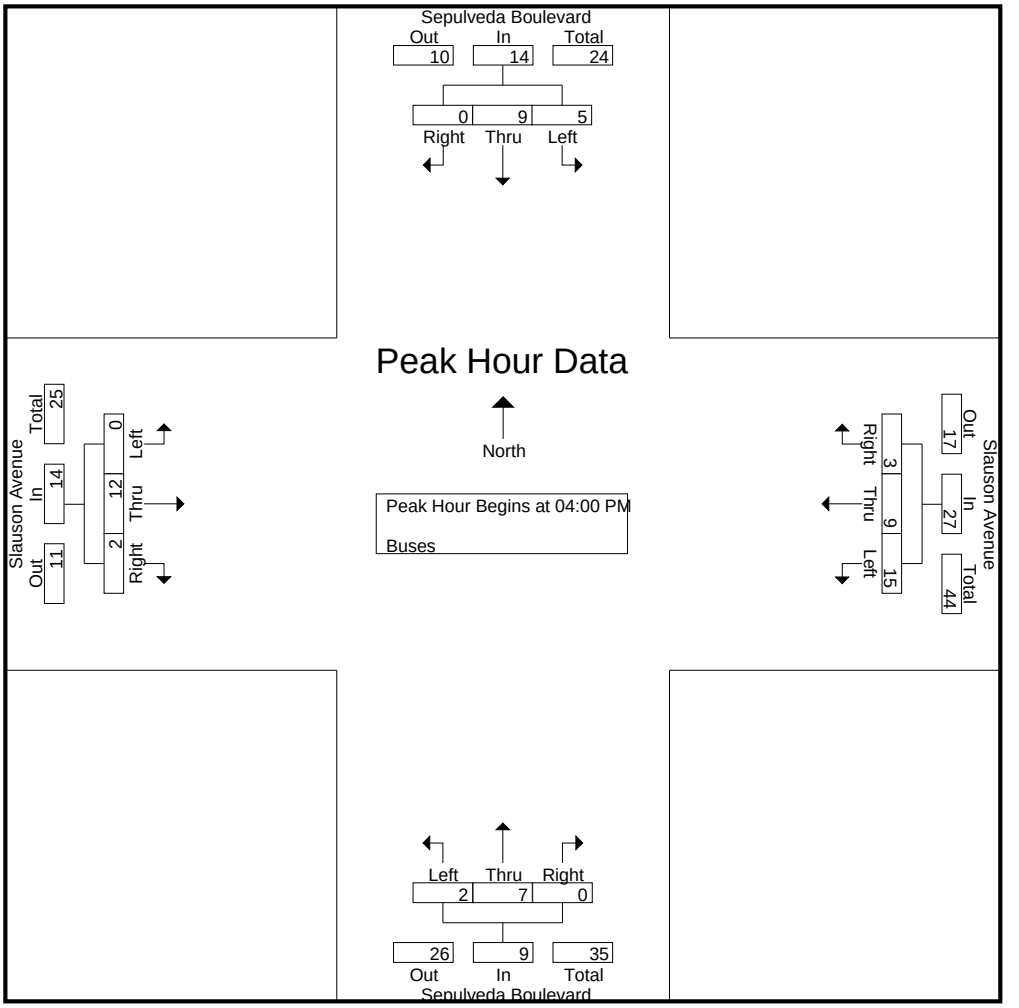

Peak Hour Analysis From 04:00 PM to 04:45 PM - Peak 1 of 1
Peak Hour for Each Approach Begins at:

	04:00 PM				04:00 PM				04:00 PM				04:00 PM			
+0 mins.	1	**5**	0	**6**	**5**	1	0	6	**2**	1	0	**3**	0	2	**1**	3
+15 mins.	**2**	2	0	4	2	**4**	1	7	0	1	0	1	0	2	1	3
+30 mins.	1	2	0	3	4	2	**2**	**8**	0	**3**	0	3	0	**5**	0	**5**
+45 mins.	1	0	0	1	4	2	0	6	0	2	0	2	0	3	0	3
Total Volume	5	9	0	14	15	9	3	27	2	7	0	9	0	12	2	14
% App. Total	35.7	64.3	0		55.6	33.3	11.1		22.2	77.8	0		0	85.7	14.3	
PHF	.625	.450	.000	.583	.750	.563	.375	.844	.250	.583	.000	.750	.000	.600	.500	.700

City Of Los Angeles
Department Of Transportation
MANUAL TRAFFIC COUNT SUMMARY

STREET:

North/South Sepulveda Boulevard

East/West Slauson Avenue

Day: Wednesday **Date:** November 25, 2018 **Weather:** CLEAR

Hours: 7-10AM 3-6PM **Staff:** CUI

School Day: YES **District:** Culver City I/S CODE 0

	N/B	S/B	E/B	W/B
DUAL-WHEELED	113	84	18	64
BIKES	19	23	5	18
BUSES	49	71	74	164

	N/B	TIME	S/B	TIME	E/B	TIME	W/B	TIME
AM PK 15 MIN	522	9.30	255	8.15	89	8.45	215	7.45
PM PK 15 MIN	380	5.15	460	4.15	130	4.30	206	4.00
AM PK HOUR	1839	9.00	891	8.00	302	8.30	781	7.45
PM PK HOUR	1345	4.45	1702	4.15	460	5.00	685	3.15

NORTHBOUND Approach

Hours	Lt	Th	Rt	Total
7-8	71	1603	23	1697
8-9	108	1384	34	1526
9-10	76	1686	77	1839
3-4	107	977	79	1163
4-5	100	1065	78	1243
5-6	112	1131	82	1325
TOTAL	574	7846	373	8793

SOUTHBOUND Approach

Hours	Lt	Th	Rt	Total
7-8	80	497	1	578
8-9	161	715	15	891
9-10	195	566	10	771
3-4	305	1151	18	1474
4-5	252	1406	24	1682
5-6	201	1322	7	1530
TOTAL	1194	5657	75	6926

TOTAL	**XING S/L**		**XING N/L**	
N-S	Ped	Sch	Ped	Sch
2275	9	1	15	1
2417	14	2	5	2
2610	14	1	5	1
2637	21	7	15	5
2925	16	0	26	4
2855	16	0	22	5
15719	90	11	88	18

EASTBOUND Approach

Hours	Lt	Th	Rt	Total
7-8	18	102	23	143
8-9	24	201	45	270
9-10	30	170	55	255
3-4	35	281	92	408
4-5	43	273	99	415
5-6	34	305	121	460
TOTAL	184	1332	435	1951

WESTBOUND Approach

Hours	Lt	Th	Rt	Total
7-8	126	332	206	664
8-9	101	354	257	712
9-10	100	173	151	424
3-4	176	250	196	622
4-5	198	266	218	682
5-6	192	266	193	651
TOTAL	893	1641	1221	3755

TOTAL	**XING W/L**		**XING E/L**	
E-W	Ped	Sch	Ped	Sch
807	11	0	21	5
982	12	1	20	4
679	9	0	29	3
1030	26	6	42	9
1097	14	3	52	9
1111	12	0	46	5
5706	84	10	210	35

(Rev Oct 06)

City of Los Angeles
Department of Transportation

BICYCLE COUNT SUMMARY

STREET:

North/South:	Sepulveda Boulevard				
East/West:	Slauson Avenue				
Day:	Wednesday	Date:	11/25/2018	Weather:	CLEAR
School Day:	Yes	District:	Culver City	I/S Code:	0
Hours:	7-10 AM, 3-6 PM	Staff:	CUI		

NORTHBOUND Approach

Hours	Lt	Th	Rt	Total
7-8	0	0	0	0
8-9	0	2	0	2
9-10	0	3	0	3
3-4	0	3	0	3
4-5	0	6	1	7
5-6	0	4	0	4
TOTAL	0	18	1	19

SOUTHBOUND Approach

Hours	Lt	Th	Rt	Total
7-8	0	2	0	2
8-9	0	6	0	6
9-10	1	2	0	3
3-4	0	4	0	4
4-5	3	2	1	6
5-6	0	2	0	2
TOTAL	4	18	1	23

TOTAL

Hours	N-S
7-8	2
8-9	8
9-10	6
3-4	7
4-5	13
5-6	6
TOTAL	42

EASTBOUND Approach

Hours	Lt	Th	Rt	Total
7-8	0	0	0	0
8-9	0	2	0	2
9-10	0	0	0	0
3-4	0	1	0	1
4-5	0	2	0	2
5-6	0	0	0	0
TOTAL	0	5	0	5

WESTBOUND Approach

Hours	Lt	Th	Rt	Total
7-8	1	0	0	1
8-9	0	0	0	0
9-10	1	0	1	2
3-4	0	2	1	3
4-5	0	2	1	3
5-6	2	4	3	9
TOTAL	4	8	6	18

TOTAL

Hours	E-W
7-8	1
8-9	2
9-10	2
3-4	4
4-5	5
5-6	9
TOTAL	23

REMARKS (6 hour total):

	NB	SB	EB	WB	TOTAL
- Female Riders	4	1	1	2	8
- No helmet riders	12	11	3	9	35
- Sidewalk Riding	4	8	4	6	22
- Wrong way riding	1	4	2	4	11

NB: Northbound, **SB**: Southbound, **EB**: Eastbound, **WB**: Westbound, **I/S**: Intersection

Source: CUI

LADOT 2015 CMP

City of Los Angeles
Department of Transportation

PEDESTRIAN COUNT SUMMARY

STREET:					
North/South:	Sepulveda Boulevard				
East/West:	Slauson Avenue				
Day:	Wednesday	Date:	################	Weather:	CLEAR
School Day:	YES	District:	Culver City	I/S Code:	0
Hours:	7-10 AM, 3-6 PM	Staff:	CUI		

AM PEAK PERIOD

15 Min. Interval	N-LEG	S-LEG	E-LEG	W-LEG	TOTAL
7:00-7:15	10	5	11	7	33
7:15-7:30	3	1	4	0	8
7:30-7:45	0	2	5	1	8
7:45-8:00	3	2	6	3	14
8:00-8:15	0	5	6	2	13
8:15-8:30	2	1	8	1	12
8:30-8:45	3	5	4	6	18
8:45-9:00	2	5	6	4	17
9:00-9:15	1	1	11	3	16
9:15-9:30	4	3	5	1	13
9:30-9:45	1	4	11	1	17
9:45-10:00	0	7	5	4	16
Hours					
7 - 8	16	10	26	11	63
8 - 9	7	16	24	13	60
9 - 10	6	15	32	9	62
TOTAL	29	41	82	33	185

PM PEAK PERIOD

15 Min. Interval	N-LEG	S-LEG	E-LEG	W-LEG	TOTAL
3:00-3:15	2	8	26	10	46
3:15-3:30	6	14	22	12	54
3:30-3:45	5	2	18	8	33
3:45-4:00	7	18	18	22	65
4:00-4:15	4	10	18	8	40
4:15-4:30	10	4	34	10	58
4:30-4:45	8	2	16	0	26
4:45-5:00	8	16	36	10	70
5:00-5:15	7	10	30	8	55
5:15-5:30	5	6	28	0	39
5:30-5:45	9	6	24	10	49
5:45-6:00	6	10	10	6	32
Hours					
3 - 4	20	42	84	52	198
4 - 5	30	32	104	28	194
5 - 6	27	32	92	24	175
	77	106	280	104	567

REMARKS (6 hour total):

	N-LEG	S-LEG	E-LEG	W-LEG	TOTAL
- Wheelchair/special needs assistance	0	1	1	1	3
- Skateboard/scooter	1	1	5	8	15

N: North, **S**: South, **E**: East, **W**: West, **I/S**: Intersection

Source: LADOT 2015 CMP

Counts Unlimited
PO Box 1178
Corona, CA 92878
(951) 268-6268

City of Culver City
N/S: Marina Freeway (CA-90) Ramps
E/W: Slauson Avenue
Weather: Clear

File Name : 06_CVC_SR-90_Slauson AM
Site Code : 16618886
Start Date : 11/28/2018
Page No : 1

Groups Printed- Passenger Vehicles - Dual Wheeled - Buses

	Punch Studio Driveway Southbound				Slauson Avenue Westbound				Marina Freeway Ramps Northbound				Slauson Avenue Eastbound				
Start Time	Left	Thru	Right	App. Total	Left	Thru	Right	App. Total	Left	Thru	Right	App. Total	Left	Thru	Right	App. Total	Int. Total
07:00 AM	1	0	0	1	655	252	4	911	31	1	139	171	0	42	87	129	1212
07:15 AM	0	1	1	2	636	287	1	924	26	1	197	224	2	48	81	131	1281
07:30 AM	0	0	1	1	608	254	0	862	26	0	226	252	0	60	110	170	1285
07:45 AM	0	0	1	1	609	307	3	919	56	0	285	341	1	67	106	174	1435
Total	1	1	3	5	2508	1100	8	3616	139	2	847	988	3	217	384	604	5213
08:00 AM	0	0	1	1	629	274	5	908	65	0	335	400	0	70	121	191	1500
08:15 AM	0	0	0	0	557	264	1	822	65	0	351	416	4	97	117	218	1456
08:30 AM	0	0	2	2	551	276	2	829	53	0	368	421	0	85	117	202	1454
08:45 AM	0	0	0	0	592	237	2	831	70	0	359	429	0	98	129	227	1487
Total	0	0	3	3	2329	1051	10	3390	253	0	1413	1666	4	350	484	838	5897
09:00 AM	0	0	0	0	538	215	0	753	64	1	294	359	0	97	107	204	1316
09:15 AM	0	0	0	0	372	170	0	542	69	0	294	363	0	95	128	223	1128
09:30 AM	0	0	0	0	247	75	2	324	82	0	270	352	1	89	111	201	877
09:45 AM	1	0	0	1	239	70	0	309	90	0	226	316	0	71	110	181	807
Total	1	0	0	1	1396	530	2	1928	305	1	1084	1390	1	352	456	809	4128
Grand Total	2	1	6	9	6233	2681	20	8934	697	3	3344	4044	8	919	1324	2251	15238
Apprch %	22.2	11.1	66.7		69.8	30	0.2		17.2	0.1	82.7		0.4	40.8	58.8		
Total %	0	0	0	0.1	40.9	17.6	0.1	58.6	4.6	0	21.9	26.5	0.1	6	8.7	14.8	
Passenger Vehicles	1	1	5	7	6112	2633	20	8765	684	3	3292	3979	8	882	1310	2200	14951
% Passenger Vehicles	50	100	83.3	77.8	98.1	98.2	100	98.1	98.1	100	98.4	98.4	100	96	98.9	97.7	98.1
Dual Wheeled	1	0	1	2	100	31	0	131	13	0	36	49	0	16	14	30	212
% Dual Wheeled	50	0	16.7	22.2	1.6	1.2	0	1.5	1.9	0	1.1	1.2	0	1.7	1.1	1.3	1.4
Buses	0	0	0	0	21	17	0	38	0	0	16	16	0	21	0	21	75
% Buses	0	0	0	0	0.3	0.6	0	0.4	0	0	0.5	0.4	0	2.3	0	0.9	0.5

	Punch Studio Driveway Southbound				Slauson Avenue Westbound				Marina Freeway Ramps Northbound				Slauson Avenue Eastbound				
Start Time	Left	Thru	Right	App. Total	Left	Thru	Right	App. Total	Left	Thru	Right	App. Total	Left	Thru	Right	App. Total	Int. Total
Peak Hour Analysis From 07:00 AM to 09:45 AM - Peak 1 of 1																	
Peak Hour for Entire Intersection Begins at 08:00 AM																	
08:00 AM	0	0	1	1	**629**	274	**5**	**908**	65	0	335	400	0	70	121	191	**1500**
08:15 AM	0	0	0	0	557	264	1	822	65	0	351	416	**4**	97	117	218	1456
08:30 AM	0	0	**2**	**2**	551	**276**	2	829	53	0	**368**	421	0	85	117	202	1454
08:45 AM	0	0	0	0	592	237	2	831	**70**	0	359	**429**	0	**98**	**129**	**227**	1487
Total Volume	0	0	3	3	2329	1051	10	3390	253	0	1413	1666	4	350	484	838	5897
% App. Total	0	0	100		68.7	31	0.3		15.2	0	84.8		0.5	41.8	57.8		
PHF	.000	.000	.375	.375	.926	.952	.500	.933	.904	.000	.960	.971	.250	.893	.938	.923	.983

Counts Unlimited
PO Box 1178
Corona, CA 92878
(951) 268-6268

City of Culver City
N/S: Marina Freeway (CA-90) Ramps
E/W: Slauson Avenue
Weather: Clear

File Name : 06_CVC_SR-90_Slauson AM
Site Code : 16618886
Start Date : 11/28/2018
Page No : 2

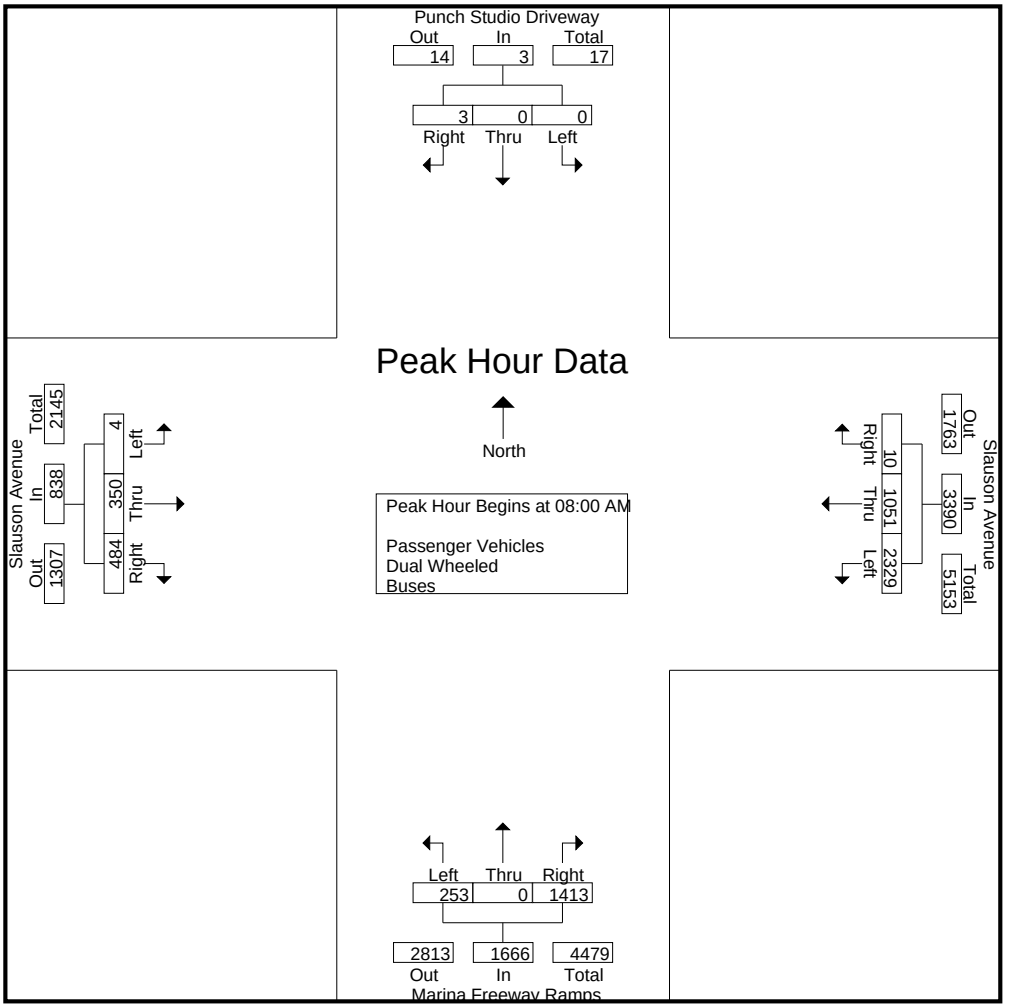

Peak Hour Analysis From 07:00 AM to 09:45 AM - Peak 1 of 1
Peak Hour for Each Approach Begins at:

	07:00 AM				07:00 AM				08:00 AM				08:30 AM			
+0 mins.	**1**	0	0	1	**655**	252	**4**	911	65	0	335	400	0	85	117	202
+15 mins.	0	**1**	**1**	**2**	636	287	1	**924**	65	0	351	416	0	**98**	**129**	**227**
+30 mins.	0	0	1	1	608	254	0	862	53	0	**368**	421	0	97	107	204
+45 mins.	0	0	1	1	609	**307**	3	919	**70**	0	359	**429**	0	95	128	223
Total Volume	1	1	3	5	2508	1100	8	3616	253	0	1413	1666	0	375	481	856
% App. Total	20	20	60		69.4	30.4	0.2		15.2	0	84.8		0	43.8	56.2	
PHF	.250	.250	.750	.625	.957	.896	.500	.978	.904	.000	.960	.971	.000	.957	.932	.943

Counts Unlimited
PO Box 1178
Corona, CA 92878
(951) 268-6268

City of Culver City
N/S: Marina Freeway (CA-90) Ramps
E/W: Slauson Avenue
Weather: Clear

File Name : 06_CVC_SR-90_Slauson AM
Site Code : 16618886
Start Date : 11/28/2018

Groups Printed- Passenger Vehicles

	Punch Studio Driveway Southbound				Slauson Avenue Westbound				Marina Freeway Ramps Northbound				Slauson Avenue Eastbound				
Start Time	Left	Thru	Right	App. Total	Left	Thru	Right	App. Total	Left	Thru	Right	App. Total	Left	Thru	Right	App. Total	Int. Total
07:00 AM	1	0	0	1	646	247	4	897	31	1	137	169	0	39	85	124	1191
07:15 AM	0	1	0	1	620	283	1	904	24	1	194	219	2	45	81	128	1252
07:30 AM	0	0	1	1	595	247	0	842	25	0	224	249	0	56	109	165	1257
07:45 AM	0	0	1	1	603	304	3	910	55	0	284	339	1	63	103	167	1417
Total	1	1	2	4	2464	1081	8	3553	135	2	839	976	3	203	378	584	5117
08:00 AM	0	0	1	1	624	268	5	897	64	0	329	393	0	68	121	189	1480
08:15 AM	0	0	0	0	544	263	1	808	65	0	348	413	4	94	117	215	1436
08:30 AM	0	0	2	2	544	273	2	819	51	0	362	413	0	84	116	200	1434
08:45 AM	0	0	0	0	579	231	2	812	70	0	357	427	0	96	126	222	1461
Total	0	0	3	3	2291	1035	10	3336	250	0	1396	1646	4	342	480	826	5811
09:00 AM	0	0	0	0	522	212	0	734	63	1	282	346	0	92	105	197	1277
09:15 AM	0	0	0	0	360	167	0	527	69	0	285	354	0	91	127	218	1099
09:30 AM	0	0	0	0	242	72	2	316	82	0	267	349	1	84	111	196	861
09:45 AM	0	0	0	0	233	66	0	299	85	0	223	308	0	70	109	179	786
Total	0	0	0	0	1357	517	2	1876	299	1	1057	1357	1	337	452	790	4023
Grand Total	1	1	5	7	6112	2633	20	8765	684	3	3292	3979	8	882	1310	2200	14951
Apprch %	14.3	14.3	71.4		69.7	30	0.2		17.2	0.1	82.7		0.4	40.1	59.5		
Total %	0	0	0	0	40.9	17.6	0.1	58.6	4.6	0	22	26.6	0.1	5.9	8.8	14.7	

	Punch Studio Driveway Southbound				Slauson Avenue Westbound				Marina Freeway Ramps Northbound				Slauson Avenue Eastbound				
Start Time	Left	Thru	Right	App. Total	Left	Thru	Right	App. Total	Left	Thru	Right	App. Total	Left	Thru	Right	App. Total	Int. Total
Peak Hour Analysis From 08:00 AM to 08:45 AM - Peak 1 of 1																	
Peak Hour for Entire Intersection Begins at 08:00 AM																	
08:00 AM	0	0	1	1	**624**	268	**5**	**897**	64	0	329	393	0	68	121	189	**1480**
08:15 AM	0	0	0	0	544	263	1	808	65	0	348	413	**4**	94	117	215	1436
08:30 AM	0	0	**2**	**2**	544	**273**	2	819	51	0	**362**	413	0	84	116	200	1434
08:45 AM	0	0	0	0	579	231	2	812	**70**	0	357	**427**	0	**96**	**126**	**222**	1461
Total Volume	0	0	3	3	2291	1035	10	3336	250	0	1396	1646	4	342	480	826	5811
% App. Total	0	0	100		68.7	31	0.3		15.2	0	84.8		0.5	41.4	58.1		
PHF	.000	.000	.375	.375	.918	.948	.500	.930	.893	.000	.964	.964	.250	.891	.952	.930	.982

Counts Unlimited
PO Box 1178
Corona, CA 92878
(951) 268-6268

City of Culver City
N/S: Marina Freeway (CA-90) Ramps
E/W: Slauson Avenue
Weather: Clear

File Name : 06_CVC_SR-90_Slauson AM
Site Code : 16618886
Start Date : 11/28/2018
Page No : 2

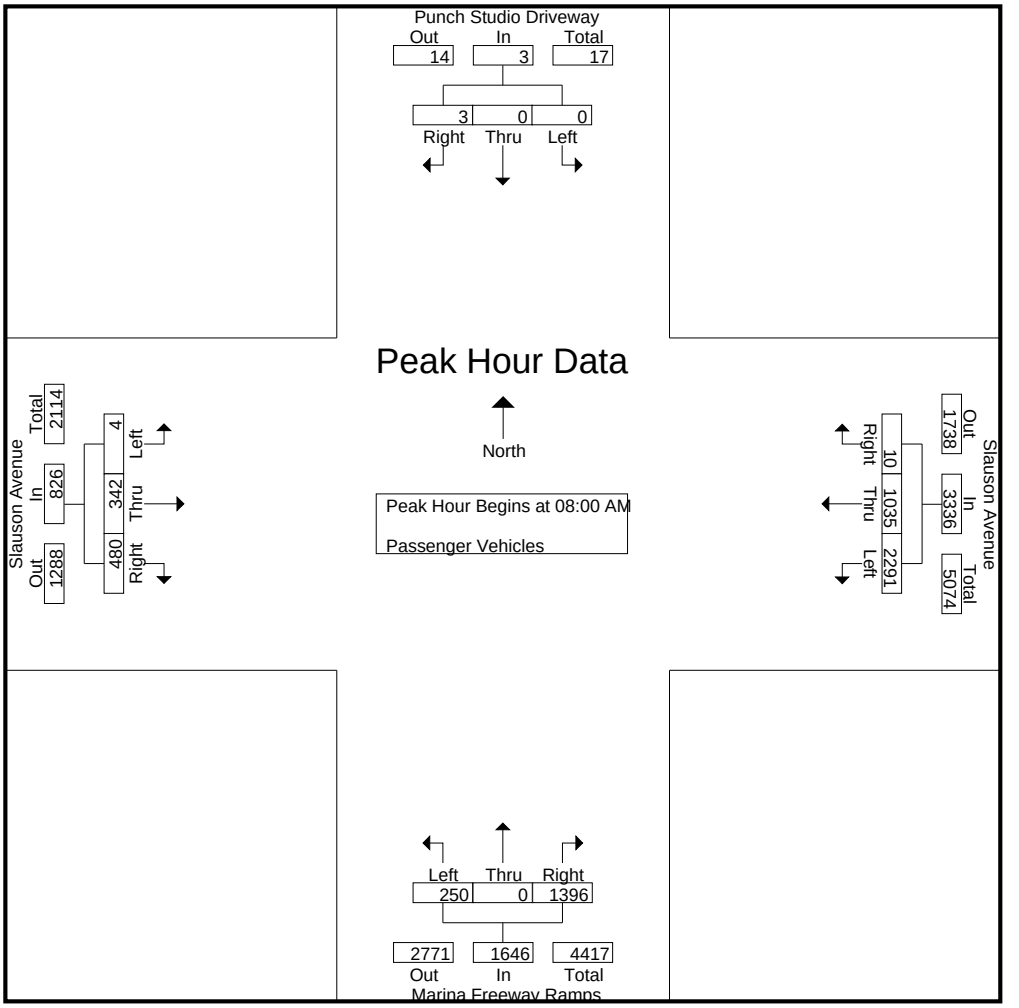

Peak Hour Analysis From 08:00 AM to 08:45 AM - Peak 1 of 1
Peak Hour for Each Approach Begins at:

	08:00 AM				08:00 AM				08:00 AM				08:00 AM			
+0 mins.	0	0	1	1	**624**	268	**5**	**897**	64	0	329	393	0	68	121	189
+15 mins.	0	0	0	0	544	263	1	808	65	0	348	413	**4**	94	117	215
+30 mins.	0	0	**2**	**2**	544	**273**	2	819	51	0	**362**	413	0	84	116	200
+45 mins.	0	0	0	0	579	231	2	812	**70**	0	357	**427**	0	**96**	**126**	**222**
Total Volume	0	0	3	3	2291	1035	10	3336	250	0	1396	1646	4	342	480	826
% App. Total	0	0	100		68.7	31	0.3		15.2	0	84.8		0.5	41.4	58.1	
PHF	.000	.000	.375	.375	.918	.948	.500	.930	.893	.000	.964	.964	.250	.891	.952	.930

Counts Unlimited
PO Box 1178
Corona, CA 92878
(951) 268-6268

City of Culver City
N/S: Marina Freeway (CA-90) Ramps
E/W: Slauson Avenue
Weather: Clear

File Name : 06_CVC_SR-90_Slauson AM
Site Code : 16618886
Start Date : 11/28/2018
Page No : 1

Groups Printed- Dual Wheeled

	Punch Studio Driveway Southbound				Slauson Avenue Westbound				Marina Freeway Ramps Northbound				Slauson Avenue Eastbound				
Start Time	Left	Thru	Right	App. Total	Left	Thru	Right	App. Total	Left	Thru	Right	App. Total	Left	Thru	Right	App. Total	Int. Total
07:00 AM	0	0	0	0	4	3	0	7	0	0	0	0	0	2	2	4	11
07:15 AM	0	0	1	1	6	2	0	8	2	0	3	5	0	2	0	2	16
07:30 AM	0	0	0	0	8	3	0	11	1	0	2	3	0	2	1	3	17
07:45 AM	0	0	0	0	6	1	0	7	1	0	1	2	0	4	3	7	16
Total	0	0	1	1	24	9	0	33	4	0	6	10	0	10	6	16	60
08:00 AM	0	0	0	0	5	5	0	10	1	0	4	5	0	0	0	0	15
08:15 AM	0	0	0	0	12	1	0	13	0	0	3	3	0	0	0	0	16
08:30 AM	0	0	0	0	7	2	0	9	2	0	4	6	0	0	1	1	16
08:45 AM	0	0	0	0	13	4	0	17	0	0	2	2	0	0	3	3	22
Total	0	0	0	0	37	12	0	49	3	0	13	16	0	0	4	4	69
09:00 AM	0	0	0	0	16	3	0	19	1	0	4	5	0	2	2	4	28
09:15 AM	0	0	0	0	12	2	0	14	0	0	8	8	0	1	1	2	24
09:30 AM	0	0	0	0	5	2	0	7	0	0	2	2	0	3	0	3	12
09:45 AM	1	0	0	1	6	3	0	9	5	0	3	8	0	0	1	1	19
Total	1	0	0	1	39	10	0	49	6	0	17	23	0	6	4	10	83
Grand Total	1	0	1	2	100	31	0	131	13	0	36	49	0	16	14	30	212
Apprch %	50	0	50		76.3	23.7	0		26.5	0	73.5		0	53.3	46.7		
Total %	0.5	0	0.5	0.9	47.2	14.6	0	61.8	6.1	0	17	23.1	0	7.5	6.6	14.2	

	Punch Studio Driveway Southbound				Slauson Avenue Westbound				Marina Freeway Ramps Northbound				Slauson Avenue Eastbound				
Start Time	Left	Thru	Right	App. Total	Left	Thru	Right	App. Total	Left	Thru	Right	App. Total	Left	Thru	Right	App. Total	Int. Total
Peak Hour Analysis From 08:00 AM to 08:45 AM - Peak 1 of 1																	
Peak Hour for Entire Intersection Begins at 08:00 AM																	
08:00 AM	0	0	0	0	5	**5**	0	10	1	0	**4**	5	0	0	0	0	15
08:15 AM	0	0	0	0	12	1	0	13	0	0	3	3	0	0	0	0	16
08:30 AM	0	0	0	0	7	2	0	9	**2**	0	4	**6**	0	0	1	1	16
08:45 AM	0	0	0	0	**13**	4	0	**17**	0	0	2	2	0	0	**3**	**3**	**22**
Total Volume	0	0	0	0	37	12	0	49	3	0	13	16	0	0	4	4	69
% App. Total	0	0	0		75.5	24.5	0		18.8	0	81.2		0	0	100		
PHF	.000	.000	.000	.000	.712	.600	.000	.721	.375	.000	.813	.667	.000	.000	.333	.333	.784

Counts Unlimited
PO Box 1178
Corona, CA 92878
(951) 268-6268

City of Culver City
N/S: Marina Freeway (CA-90) Ramps
E/W: Slauson Avenue
Weather: Clear

File Name : 06_CVC_SR-90_Slauson AM
Site Code : 16618886
Start Date : 11/28/2018
Page No : 2

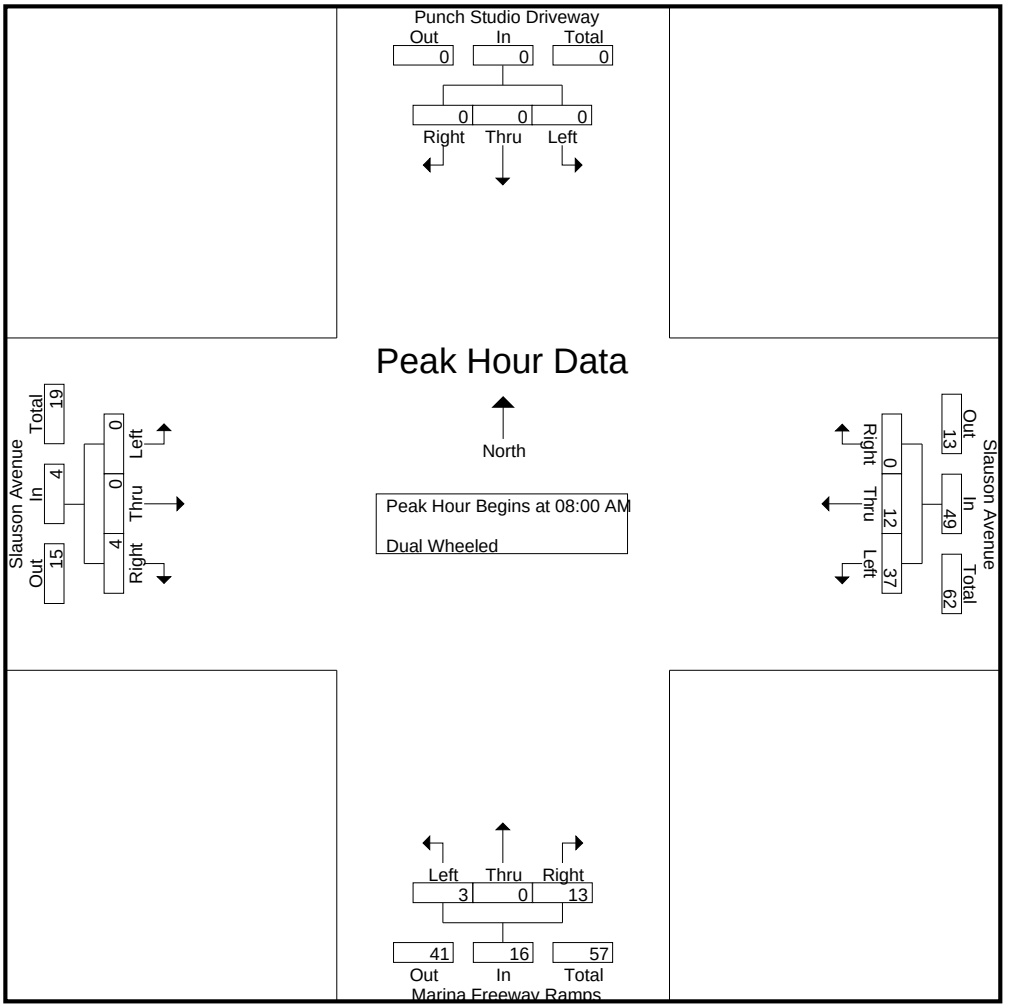

Peak Hour Analysis From 08:00 AM to 08:45 AM - Peak 1 of 1
Peak Hour for Each Approach Begins at:

	08:00 AM				08:00 AM				08:00 AM				08:00 AM			
+0 mins.	0	0	0	0	5	**5**	0	10	1	0	**4**	5	0	0	0	0
+15 mins.	0	0	0	0	12	1	0	13	0	0	3	3	0	0	0	0
+30 mins.	0	0	0	0	7	2	0	9	**2**	0	4	**6**	0	0	1	1
+45 mins.	0	0	0	0	**13**	4	0	**17**	0	0	2	2	0	0	**3**	**3**
Total Volume	0	0	0	0	37	12	0	49	3	0	13	16	0	0	4	4
% App. Total	0	0	0		75.5	24.5	0		18.8	0	81.2		0	0	100	
PHF	.000	.000	.000	.000	.712	.600	.000	.721	.375	.000	.813	.667	.000	.000	.333	.333

Counts Unlimited
PO Box 1178
Corona, CA 92878
(951) 268-6268

City of Culver City
N/S: Marina Freeway (CA-90) Ramps
E/W: Slauson Avenue
Weather: Clear

File Name : 06_CVC_SR-90_Slauson AM
Site Code : 16618886
Start Date : 11/28/2018

Groups Printed- Buses

	Punch Studio Driveway Southbound				Slauson Avenue Westbound				Marina Freeway Ramps Northbound				Slauson Avenue Eastbound				
Start Time	Left	Thru	Right	App. Total	Left	Thru	Right	App. Total	Left	Thru	Right	App. Total	Left	Thru	Right	App. Total	Int. Total
07:00 AM	0	0	0	0	5	2	0	7	0	0	2	2	0	1	0	1	10
07:15 AM	0	0	0	0	10	2	0	12	0	0	0	0	0	1	0	1	13
07:30 AM	0	0	0	0	5	4	0	9	0	0	0	0	0	2	0	2	11
07:45 AM	0	0	0	0	0	2	0	2	0	0	0	0	0	0	0	0	2
Total	0	0	0	0	20	10	0	30	0	0	2	2	0	4	0	4	36
08:00 AM	0	0	0	0	0	1	0	1	0	0	2	2	0	2	0	2	5
08:15 AM	0	0	0	0	1	0	0	1	0	0	0	0	0	3	0	3	4
08:30 AM	0	0	0	0	0	1	0	1	0	0	2	2	0	1	0	1	4
08:45 AM	0	0	0	0	0	2	0	2	0	0	0	0	0	2	0	2	4
Total	0	0	0	0	1	4	0	5	0	0	4	4	0	8	0	8	17
09:00 AM	0	0	0	0	0	0	0	0	0	0	8	8	0	3	0	3	11
09:15 AM	0	0	0	0	0	1	0	1	0	0	1	1	0	3	0	3	5
09:30 AM	0	0	0	0	0	1	0	1	0	0	1	1	0	2	0	2	4
09:45 AM	0	0	0	0	0	1	0	1	0	0	0	0	0	1	0	1	2
Total	0	0	0	0	0	3	0	3	0	0	10	10	0	9	0	9	22
Grand Total	0	0	0	0	21	17	0	38	0	0	16	16	0	21	0	21	75
Apprch %	0	0	0		55.3	44.7	0		0	0	100		0	100	0		
Total %	0	0	0	0	28	22.7	0	50.7	0	0	21.3	21.3	0	28	0	28	

	Punch Studio Driveway Southbound				Slauson Avenue Westbound				Marina Freeway Ramps Northbound				Slauson Avenue Eastbound				
Start Time	Left	Thru	Right	App. Total	Left	Thru	Right	App. Total	Left	Thru	Right	App. Total	Left	Thru	Right	App. Total	Int. Total
Peak Hour Analysis From 08:00 AM to 08:45 AM - Peak 1 of 1																	
Peak Hour for Entire Intersection Begins at 08:00 AM																	
08:00 AM	0	0	0	0	0	1	0	1	0	0	**2**	**2**	0	2	0	2	**5**
08:15 AM	0	0	0	0	**1**	0	0	1	0	0	0	0	0	**3**	0	**3**	4
08:30 AM	0	0	0	0	0	1	0	1	0	0	2	2	0	1	0	1	4
08:45 AM	0	0	0	0	0	**2**	0	**2**	0	0	0	0	0	2	0	2	4
Total Volume	0	0	0	0	1	4	0	5	0	0	4	4	0	8	0	8	17
% App. Total	0	0	0		20	80	0		0	0	100		0	100	0		
PHF	.000	.000	.000	.000	.250	.500	.000	.625	.000	.000	.500	.500	.000	.667	.000	.667	.850

Counts Unlimited
PO Box 1178
Corona, CA 92878
(951) 268-6268

City of Culver City
N/S: Marina Freeway (CA-90) Ramps
E/W: Slauson Avenue
Weather: Clear

File Name : 06_CVC_SR-90_Slauson AM
Site Code : 16618886
Start Date : 11/28/2018
Page No : 2

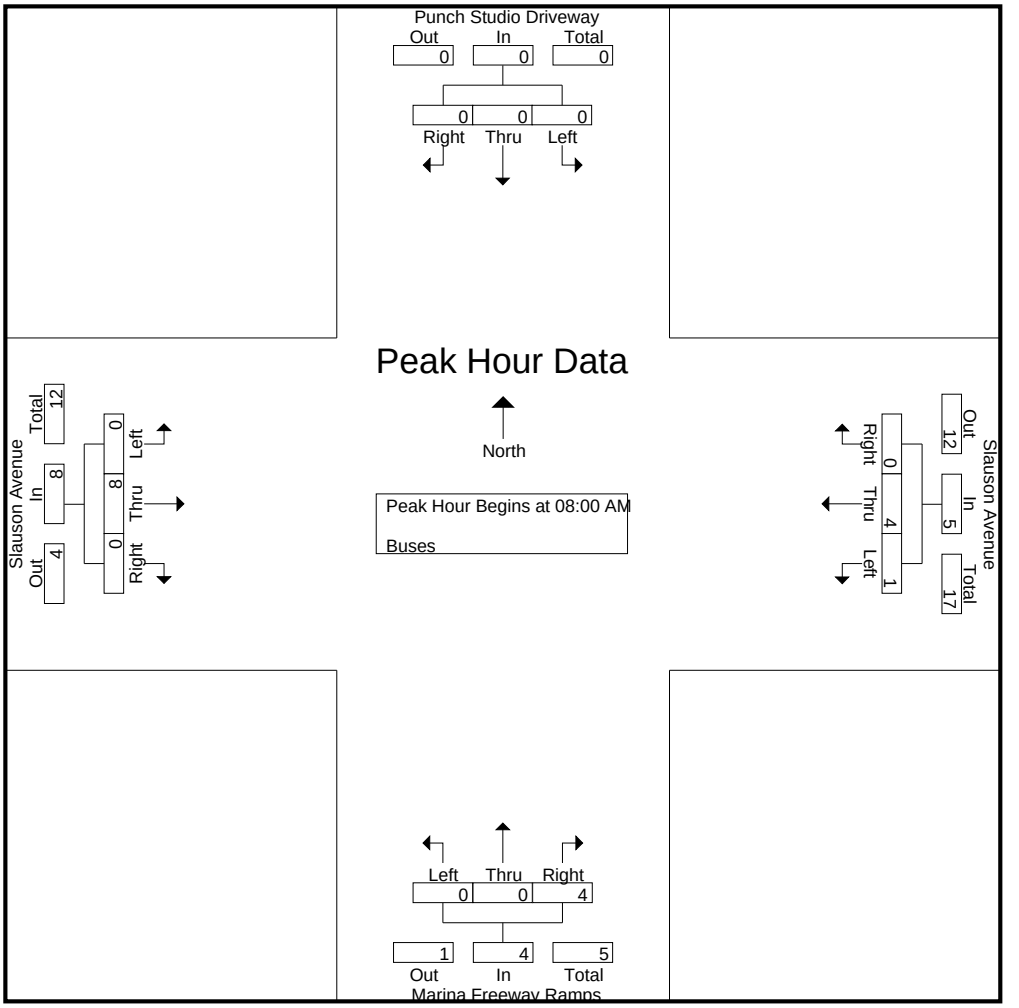

Peak Hour Analysis From 08:00 AM to 08:45 AM - Peak 1 of 1
Peak Hour for Each Approach Begins at:

	08:00 AM				08:00 AM				08:00 AM				08:00 AM			
+0 mins.	0	0	0	0	0	1	0	1	0	0	**2**	**2**	0	2	0	2
+15 mins.	0	0	0	0	**1**	0	0	1	0	0	0	0	0	**3**	0	**3**
+30 mins.	0	0	0	0	0	1	0	1	0	0	2	2	0	1	0	1
+45 mins.	0	0	0	0	0	**2**	0	**2**	0	0	0	0	0	2	0	2
Total Volume	0	0	0	0	1	4	0	5	0	0	4	4	0	8	0	8
% App. Total	0	0	0		20	80	0		0	0	100		0	100	0	
PHF	.000	.000	.000	.000	.250	.500	.000	.625	.000	.000	.500	.500	.000	.667	.000	.667

Counts Unlimited
PO Box 1178
Corona, CA 92878
(951) 268-6268

City of Culver City
N/S: Marina Freeway (CA-90) Ramps
E/W: Slauson Avenue
Weather: Clear

File Name : 06_CVC_SR-90_Slauson PM
Site Code : 16618886
Start Date : 11/28/2018
Page No : 1

Groups Printed- Passenger Vehicles - Dual Wheeled - Buses

	Punch Studio Driveway Southbound				Slauson Avenue Westbound				Marina Freeway Ramps Northbound				Slauson Avenue Eastbound				
Start Time	Left	Thru	Right	App. Total	Left	Thru	Right	App. Total	Left	Thru	Right	App. Total	Left	Thru	Right	App. Total	Int. Total
03:00 PM	0	1	0	1	232	179	0	411	71	0	358	429	0	206	86	292	1133
03:15 PM	0	1	0	1	211	170	0	381	86	0	359	445	0	156	102	258	1085
03:30 PM	0	0	0	0	169	163	1	333	124	0	352	476	1	166	96	263	1072
03:45 PM	0	1	0	1	197	176	0	373	102	0	348	450	1	154	110	265	1089
Total	0	3	0	3	809	688	1	1498	383	0	1417	1800	2	682	394	1078	4379
04:00 PM	4	3	6	13	171	177	0	348	117	1	274	392	0	152	111	263	1016
04:15 PM	1	1	1	3	197	170	0	367	112	0	367	479	1	117	131	249	1098
04:30 PM	1	3	0	4	192	168	0	360	105	0	298	403	0	135	133	268	1035
04:45 PM	1	0	0	1	216	187	1	404	92	0	303	395	1	126	97	224	1024
Total	7	7	7	21	776	702	1	1479	426	1	1242	1669	2	530	472	1004	4173
05:00 PM	1	3	5	9	172	209	0	381	118	0	326	444	0	125	126	251	1085
05:15 PM	0	3	2	5	205	170	0	375	123	0	309	432	0	89	110	199	1011
05:30 PM	1	1	0	2	165	179	0	344	126	0	299	425	0	103	109	212	983
05:45 PM	0	3	0	3	187	148	1	336	89	0	332	421	0	100	75	175	935
Total	2	10	7	19	729	706	1	1436	456	0	1266	1722	0	417	420	837	4014
Grand Total	9	20	14	43	2314	2096	3	4413	1265	1	3925	5191	4	1629	1286	2919	12566
Apprch %	20.9	46.5	32.6		52.4	47.5	0.1		24.4	0	75.6		0.1	55.8	44.1		
Total %	0.1	0.2	0.1	0.3	18.4	16.7	0	35.1	10.1	0	31.2	41.3	0	13	10.2	23.2	
Passenger Vehicles	9	20	14	43	2290	2067	3	4360	1251	1	3844	5096	4	1607	1282	2893	12392
% Passenger Vehicles	100	100	100	100	99	98.6	100	98.8	98.9	100	97.9	98.2	100	98.6	99.7	99.1	98.6
Dual Wheeled	0	0	0	0	17	12	0	29	12	0	59	71	0	4	3	7	107
% Dual Wheeled	0	0	0	0	0.7	0.6	0	0.7	0.9	0	1.5	1.4	0	0.2	0.2	0.2	0.9
Buses	0	0	0	0	7	17	0	24	2	0	22	24	0	18	1	19	67
% Buses	0	0	0	0	0.3	0.8	0	0.5	0.2	0	0.6	0.5	0	1.1	0.1	0.7	0.5

	Punch Studio Driveway Southbound				Slauson Avenue Westbound				Marina Freeway Ramps Northbound				Slauson Avenue Eastbound				
Start Time	Left	Thru	Right	App. Total	Left	Thru	Right	App. Total	Left	Thru	Right	App. Total	Left	Thru	Right	App. Total	Int. Total
Peak Hour Analysis From 03:00 PM to 05:45 PM - Peak 1 of 1																	
Peak Hour for Entire Intersection Begins at 03:00 PM																	
03:00 PM	0	**1**	0	**1**	**232**	**179**	0	**411**	71	0	358	429	0	**206**	86	**292**	**1133**
03:15 PM	0	1	0	1	211	170	0	381	86	0	**359**	445	0	156	102	258	1085
03:30 PM	0	0	0	0	169	163	**1**	333	**124**	0	352	**476**	**1**	166	96	263	1072
03:45 PM	0	1	0	1	197	176	0	373	102	0	348	450	1	154	**110**	265	1089
Total Volume	0	3	0	3	809	688	1	1498	383	0	1417	1800	2	682	394	1078	4379
% App. Total	0	100	0		54	45.9	0.1		21.3	0	78.7		0.2	63.3	36.5		
PHF	.000	.750	.000	.750	.872	.961	.250	.911	.772	.000	.987	.945	.500	.828	.895	.923	.966

Counts Unlimited
PO Box 1178
Corona, CA 92878
(951) 268-6268

City of Culver City
N/S: Marina Freeway (CA-90) Ramps
E/W: Slauson Avenue
Weather: Clear

File Name : 06_CVC_SR-90_Slauson PM
Site Code : 16618886
Start Date : 11/28/2018
Page No : 2

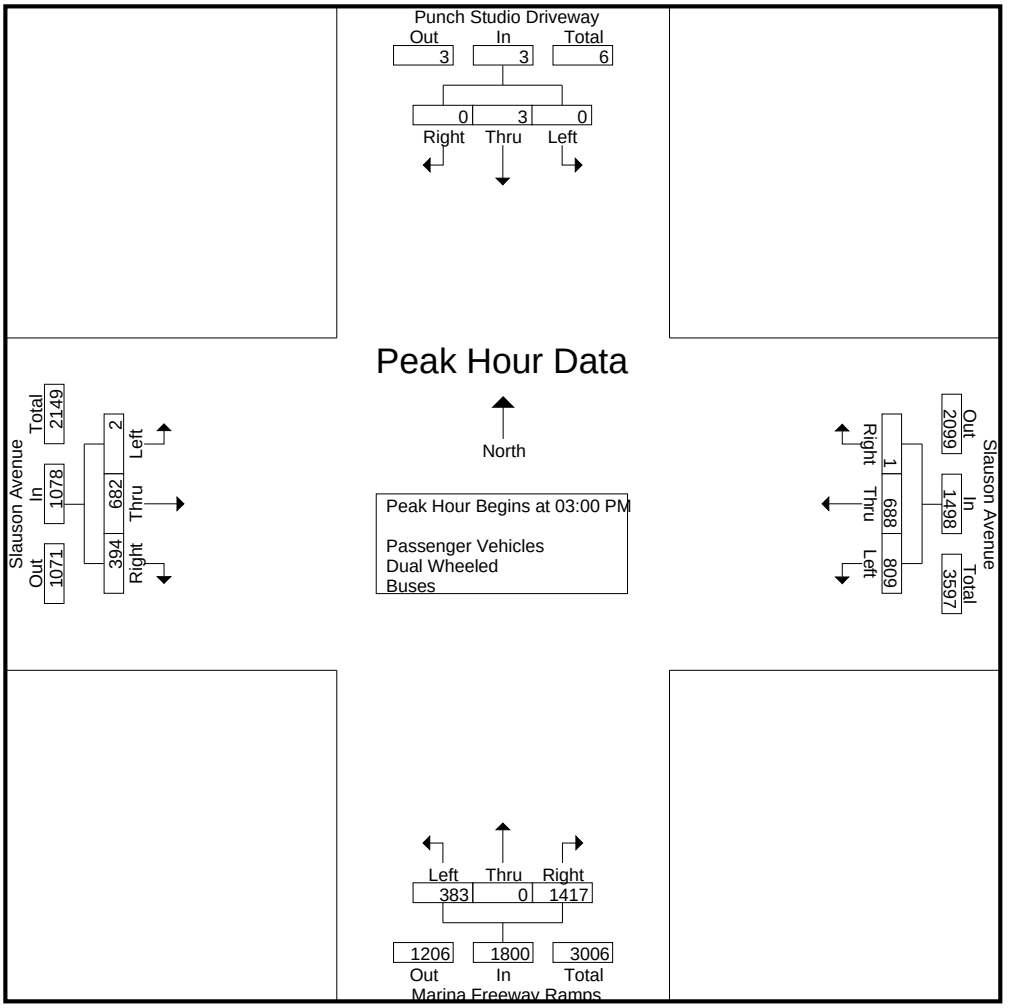

Peak Hour Analysis From 03:00 PM to 05:45 PM - Peak 1 of 1
Peak Hour for Each Approach Begins at:

	03:45 PM				04:30 PM				03:00 PM				03:00 PM			
+0 mins.	0	1	0	1	192	168	0	360	71	0	358	429	0	**206**	86	**292**
+15 mins.	**4**	**3**	**6**	**13**	**216**	187	**1**	**404**	86	0	**359**	445	0	156	102	258
+30 mins.	1	1	1	3	172	**209**	0	381	**124**	0	352	**476**	**1**	166	96	263
+45 mins.	1	3	0	4	205	170	0	375	102	0	348	450	1	154	**110**	265
Total Volume	6	8	7	21	785	734	1	1520	383	0	1417	1800	2	682	394	1078
% App. Total	28.6	38.1	33.3		51.6	48.3	0.1		21.3	0	78.7		0.2	63.3	36.5	
PHF	.375	.667	.292	.404	.909	.878	.250	.941	.772	.000	.987	.945	.500	.828	.895	.923

Counts Unlimited
PO Box 1178
Corona, CA 92878
(951) 268-6268

City of Culver City
N/S: Marina Freeway (CA-90) Ramps
E/W: Slauson Avenue
Weather: Clear

File Name : 06_CVC_SR-90_Slauson PM
Site Code : 16618886
Start Date : 11/28/2018
Page No : 1

Groups Printed- Passenger Vehicles

	Punch Studio Driveway Southbound				Slauson Avenue Westbound				Marina Freeway Ramps Northbound				Slauson Avenue Eastbound				
Start Time	Left	Thru	Right	App. Total	Left	Thru	Right	App. Total	Left	Thru	Right	App. Total	Left	Thru	Right	App. Total	Int. Total
03:00 PM	0	1	0	1	230	177	0	407	71	0	349	420	0	204	85	289	1117
03:15 PM	0	1	0	1	209	170	0	379	84	0	349	433	0	153	102	255	1068
03:30 PM	0	0	0	0	169	162	1	332	123	0	341	464	1	165	95	261	1057
03:45 PM	0	1	0	1	194	174	0	368	99	0	336	435	1	149	110	260	1064
Total	0	3	0	3	802	683	1	1486	377	0	1375	1752	2	671	392	1065	4306
04:00 PM	4	3	6	13	169	175	0	344	114	1	269	384	0	150	111	261	1002
04:15 PM	1	1	1	3	190	163	0	353	112	0	356	468	1	114	131	246	1070
04:30 PM	1	3	0	4	191	166	0	357	104	0	292	396	0	135	133	268	1025
04:45 PM	1	0	0	1	213	184	1	398	92	0	301	393	1	125	96	222	1014
Total	7	7	7	21	763	688	1	1452	422	1	1218	1641	2	524	471	997	4111
05:00 PM	1	3	5	9	169	206	0	375	116	0	324	440	0	124	125	249	1073
05:15 PM	0	3	2	5	204	168	0	372	122	0	305	427	0	88	110	198	1002
05:30 PM	1	1	0	2	165	176	0	341	125	0	293	418	0	103	109	212	973
05:45 PM	0	3	0	3	187	146	1	334	89	0	329	418	0	97	75	172	927
Total	2	10	7	19	725	696	1	1422	452	0	1251	1703	0	412	419	831	3975
Grand Total	9	20	14	43	2290	2067	3	4360	1251	1	3844	5096	4	1607	1282	2893	12392
Apprch %	20.9	46.5	32.6		52.5	47.4	0.1		24.5	0	75.4		0.1	55.5	44.3		
Total %	0.1	0.2	0.1	0.3	18.5	16.7	0	35.2	10.1	0	31	41.1	0	13	10.3	23.3	

	Punch Studio Driveway Southbound				Slauson Avenue Westbound				Marina Freeway Ramps Northbound				Slauson Avenue Eastbound				
Start Time	Left	Thru	Right	App. Total	Left	Thru	Right	App. Total	Left	Thru	Right	App. Total	Left	Thru	Right	App. Total	Int. Total
Peak Hour Analysis From 03:00 PM to 03:45 PM - Peak 1 of 1																	
Peak Hour for Entire Intersection Begins at 03:00 PM																	
03:00 PM	0	**1**	0	**1**	**230**	**177**	0	**407**	71	0	**349**	420	0	**204**	85	**289**	**1117**
03:15 PM	0	1	0	1	209	170	0	379	84	0	349	433	0	153	102	255	1068
03:30 PM	0	0	0	0	169	162	**1**	332	**123**	0	341	**464**	**1**	165	95	261	1057
03:45 PM	0	1	0	1	194	174	0	368	99	0	336	435	1	149	**110**	260	1064
Total Volume	0	3	0	3	802	683	1	1486	377	0	1375	1752	2	671	392	1065	4306
% App. Total	0	100	0		54	46	0.1		21.5	0	78.5		0.2	63	36.8		
PHF	.000	.750	.000	.750	.872	.965	.250	.913	.766	.000	.985	.944	.500	.822	.891	.921	.964

Counts Unlimited
PO Box 1178
Corona, CA 92878
(951) 268-6268

City of Culver City
N/S: Marina Freeway (CA-90) Ramps
E/W: Slauson Avenue
Weather: Clear

File Name : 06_CVC_SR-90_Slauson PM
Site Code : 16618886
Start Date : 11/28/2018
Page No : 2

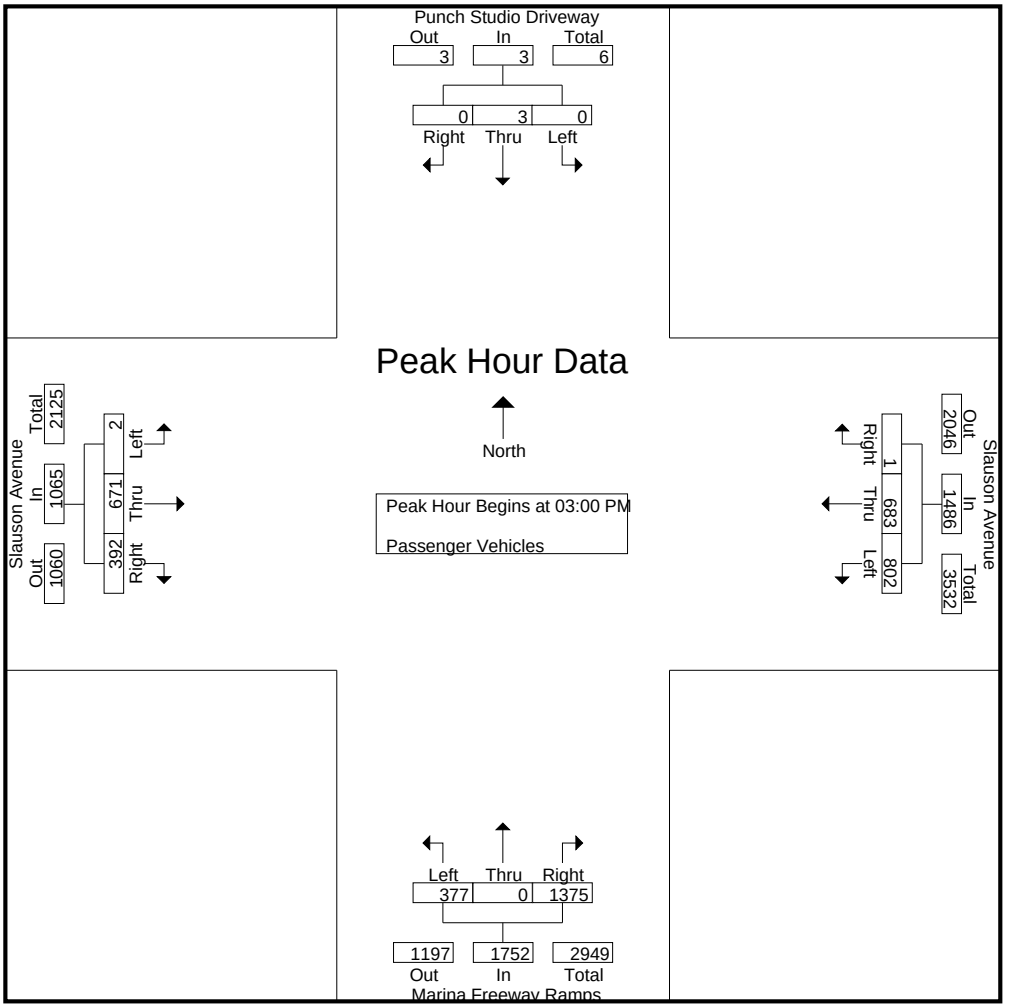

Peak Hour Analysis From 03:00 PM to 03:45 PM - Peak 1 of 1
Peak Hour for Each Approach Begins at:

	03:00 PM				03:00 PM				03:00 PM				03:00 PM			
+0 mins.	0	**1**	0	**1**	**230**	**177**	0	**407**	71	0	**349**	420	0	**204**	85	**289**
+15 mins.	0	1	0	1	209	170	0	379	84	0	349	433	0	153	102	255
+30 mins.	0	0	0	0	169	162	**1**	332	**123**	0	341	**464**	**1**	165	95	261
+45 mins.	0	1	0	1	194	174	0	368	99	0	336	435	1	149	**110**	260
Total Volume	0	3	0	3	802	683	1	1486	377	0	1375	1752	2	671	392	1065
% App. Total	0	100	0		54	46	0.1		21.5	0	78.5		0.2	63	36.8	
PHF	.000	.750	.000	.750	.872	.965	.250	.913	.766	.000	.985	.944	.500	.822	.891	.921

Counts Unlimited
PO Box 1178
Corona, CA 92878
(951) 268-6268

City of Culver City
N/S: Marina Freeway (CA-90) Ramps
E/W: Slauson Avenue
Weather: Clear

File Name : 06_CVC_SR-90_Slauson PM
Site Code : 16618886
Start Date : 11/28/2018
Page No : 1

Groups Printed- Dual Wheeled

	Punch Studio Driveway Southbound				Slauson Avenue Westbound				Marina Freeway Ramps Northbound				Slauson Avenue Eastbound				
Start Time	Left	Thru	Right	App. Total	Left	Thru	Right	App. Total	Left	Thru	Right	App. Total	Left	Thru	Right	App. Total	Int. Total
03:00 PM	0	0	0	0	1	0	0	1	0	0	5	5	0	0	1	1	7
03:15 PM	0	0	0	0	1	0	0	1	2	0	4	6	0	1	0	1	8
03:30 PM	0	0	0	0	0	0	0	0	0	0	7	7	0	0	0	0	7
03:45 PM	0	0	0	0	3	2	0	5	2	0	10	12	0	1	0	1	18
Total	0	0	0	0	5	2	0	7	4	0	26	30	0	2	1	3	40
04:00 PM	0	0	0	0	1	1	0	2	3	0	4	7	0	1	0	1	10
04:15 PM	0	0	0	0	5	3	0	8	0	0	9	9	0	0	0	0	17
04:30 PM	0	0	0	0	0	1	0	1	1	0	5	6	0	0	0	0	7
04:45 PM	0	0	0	0	2	1	0	3	0	0	1	1	0	0	1	1	5
Total	0	0	0	0	8	6	0	14	4	0	19	23	0	1	1	2	39
05:00 PM	0	0	0	0	3	2	0	5	2	0	2	4	0	0	1	1	10
05:15 PM	0	0	0	0	1	0	0	1	1	0	3	4	0	0	0	0	5
05:30 PM	0	0	0	0	0	2	0	2	1	0	6	7	0	0	0	0	9
05:45 PM	0	0	0	0	0	0	0	0	0	0	3	3	0	1	0	1	4
Total	0	0	0	0	4	4	0	8	4	0	14	18	0	1	1	2	28
Grand Total	0	0	0	0	17	12	0	29	12	0	59	71	0	4	3	7	107
Apprch %	0	0	0		58.6	41.4	0		16.9	0	83.1		0	57.1	42.9		
Total %	0	0	0	0	15.9	11.2	0	27.1	11.2	0	55.1	66.4	0	3.7	2.8	6.5	

	Punch Studio Driveway Southbound				Slauson Avenue Westbound				Marina Freeway Ramps Northbound				Slauson Avenue Eastbound				
Start Time	Left	Thru	Right	App. Total	Left	Thru	Right	App. Total	Left	Thru	Right	App. Total	Left	Thru	Right	App. Total	Int. Total
Peak Hour Analysis From 03:00 PM to 03:45 PM - Peak 1 of 1																	
Peak Hour for Entire Intersection Begins at 03:00 PM																	
03:00 PM	0	0	0	0	1	0	0	1	0	0	5	5	0	0	**1**	**1**	7
03:15 PM	0	0	0	0	1	0	0	1	**2**	0	4	6	0	**1**	0	1	8
03:30 PM	0	0	0	0	0	0	0	0	0	0	7	7	0	0	0	0	7
03:45 PM	0	0	0	0	**3**	**2**	0	**5**	2	0	**10**	**12**	0	1	0	1	**18**
Total Volume	0	0	0	0	5	2	0	7	4	0	26	30	0	2	1	3	40
% App. Total	0	0	0		71.4	28.6	0		13.3	0	86.7		0	66.7	33.3		
PHF	.000	.000	.000	.000	.417	.250	.000	.350	.500	.000	.650	.625	.000	.500	.250	.750	.556

Counts Unlimited
PO Box 1178
Corona, CA 92878
(951) 268-6268

City of Culver City
N/S: Marina Freeway (CA-90) Ramps
E/W: Slauson Avenue
Weather: Clear

File Name : 06_CVC_SR-90_Slauson PM
Site Code : 16618886
Start Date : 11/28/2018
Page No : 2

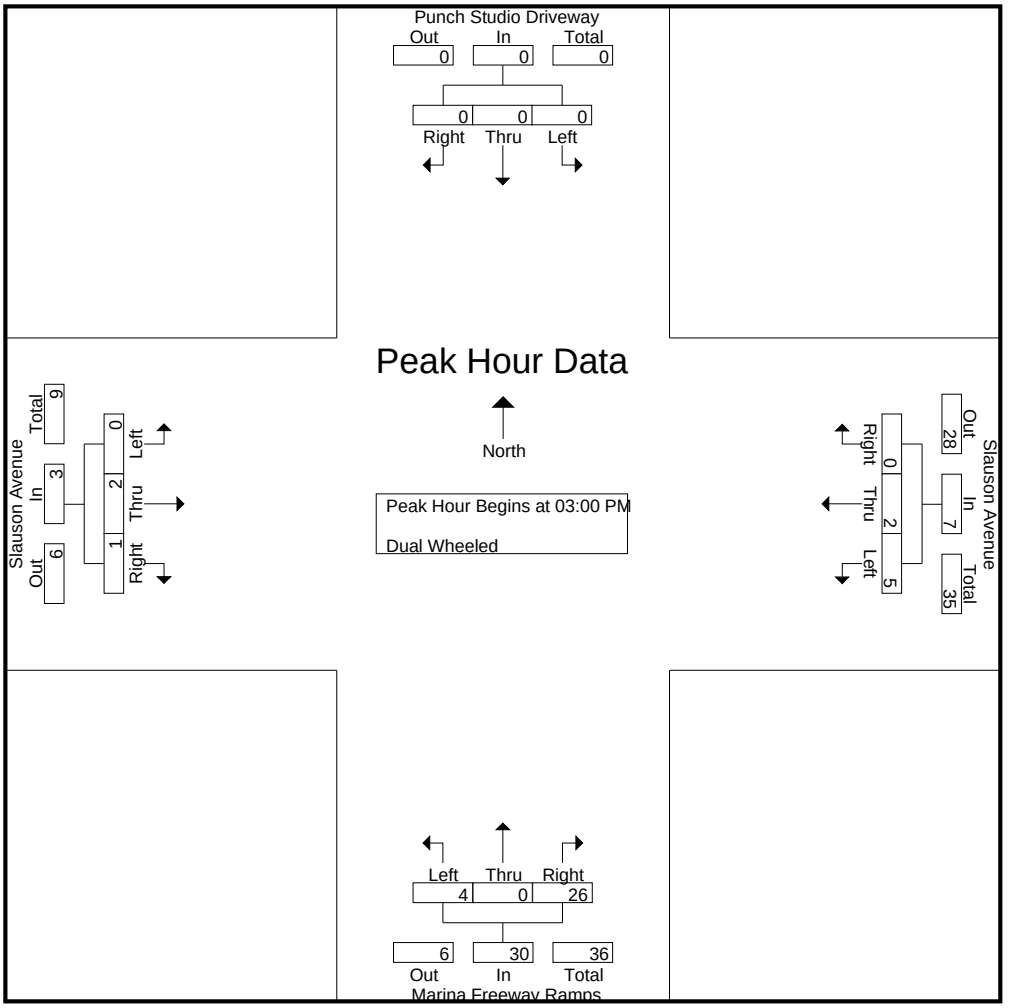

Peak Hour Analysis From 03:00 PM to 03:45 PM - Peak 1 of 1
Peak Hour for Each Approach Begins at:

	03:00 PM				03:00 PM				03:00 PM				03:00 PM			
+0 mins.	0	0	0	0	1	0	0	1	0	0	5	5	0	0	**1**	**1**
+15 mins.	0	0	0	0	1	0	0	1	**2**	0	4	6	0	**1**	0	1
+30 mins.	0	0	0	0	0	0	0	0	0	0	7	7	0	0	0	0
+45 mins.	0	0	0	0	**3**	**2**	0	**5**	2	0	**10**	**12**	0	1	0	1
Total Volume	0	0	0	0	5	2	0	7	4	0	26	30	0	2	1	3
% App. Total	0	0	0		71.4	28.6	0		13.3	0	86.7		0	66.7	33.3	
PHF	.000	.000	.000	.000	.417	.250	.000	.350	.500	.000	.650	.625	.000	.500	.250	.750

Counts Unlimited
PO Box 1178
Corona, CA 92878
(951) 268-6268

City of Culver City
N/S: Marina Freeway (CA-90) Ramps
E/W: Slauson Avenue
Weather: Clear

File Name : 06_CVC_SR-90_Slauson PM
Site Code : 16618886
Start Date : 11/28/2018

Groups Printed- Buses

	Punch Studio Driveway Southbound				Slauson Avenue Westbound				Marina Freeway Ramps Northbound				Slauson Avenue Eastbound				
Start Time	Left	Thru	Right	App. Total	Left	Thru	Right	App. Total	Left	Thru	Right	App. Total	Left	Thru	Right	App. Total	Int. Total
03:00 PM	0	0	0	0	1	2	0	3	0	0	4	4	0	2	0	2	9
03:15 PM	0	0	0	0	1	0	0	1	0	0	6	6	0	2	0	2	9
03:30 PM	0	0	0	0	0	1	0	1	1	0	4	5	0	1	1	2	8
03:45 PM	0	0	0	0	0	0	0	0	1	0	2	3	0	4	0	4	7
Total	0	0	0	0	2	3	0	5	2	0	16	18	0	9	1	10	33
04:00 PM	0	0	0	0	1	1	0	2	0	0	1	1	0	1	0	1	4
04:15 PM	0	0	0	0	2	4	0	6	0	0	2	2	0	3	0	3	11
04:30 PM	0	0	0	0	1	1	0	2	0	0	1	1	0	0	0	0	3
04:45 PM	0	0	0	0	1	2	0	3	0	0	1	1	0	1	0	1	5
Total	0	0	0	0	5	8	0	13	0	0	5	5	0	5	0	5	23
05:00 PM	0	0	0	0	0	1	0	1	0	0	0	0	0	1	0	1	2
05:15 PM	0	0	0	0	0	2	0	2	0	0	1	1	0	1	0	1	4
05:30 PM	0	0	0	0	0	1	0	1	0	0	0	0	0	0	0	0	1
05:45 PM	0	0	0	0	0	2	0	2	0	0	0	0	0	2	0	2	4
Total	0	0	0	0	0	6	0	6	0	0	1	1	0	4	0	4	11
Grand Total	0	0	0	0	7	17	0	24	2	0	22	24	0	18	1	19	67
Apprch %	0	0	0		29.2	70.8	0		8.3	0	91.7		0	94.7	5.3		
Total %	0	0	0	0	10.4	25.4	0	35.8	3	0	32.8	35.8	0	26.9	1.5	28.4	

	Punch Studio Driveway Southbound				Slauson Avenue Westbound				Marina Freeway Ramps Northbound				Slauson Avenue Eastbound				
Start Time	Left	Thru	Right	App. Total	Left	Thru	Right	App. Total	Left	Thru	Right	App. Total	Left	Thru	Right	App. Total	Int. Total
Peak Hour Analysis From 03:00 PM to 03:45 PM - Peak 1 of 1																	
Peak Hour for Entire Intersection Begins at 03:00 PM																	
03:00 PM	0	0	0	0	**1**	**2**	0	**3**	0	0	4	4	0	2	0	2	**9**
03:15 PM	0	0	0	0	1	0	0	1	0	0	**6**	**6**	0	2	0	2	9
03:30 PM	0	0	0	0	0	1	0	1	**1**	0	4	5	0	1	**1**	2	8
03:45 PM	0	0	0	0	0	0	0	0	1	0	2	3	0	**4**	0	**4**	7
Total Volume	0	0	0	0	2	3	0	5	2	0	16	18	0	9	1	10	33
% App. Total	0	0	0		40	60	0		11.1	0	88.9		0	90	10		
PHF	.000	.000	.000	.000	.500	.375	.000	.417	.500	.000	.667	.750	.000	.563	.250	.625	.917

Counts Unlimited
PO Box 1178
Corona, CA 92878
(951) 268-6268

City of Culver City
N/S: Marina Freeway (CA-90) Ramps
E/W: Slauson Avenue
Weather: Clear

File Name : 06_CVC_SR-90_Slauson PM
Site Code : 16618886
Start Date : 11/28/2018
Page No : 2

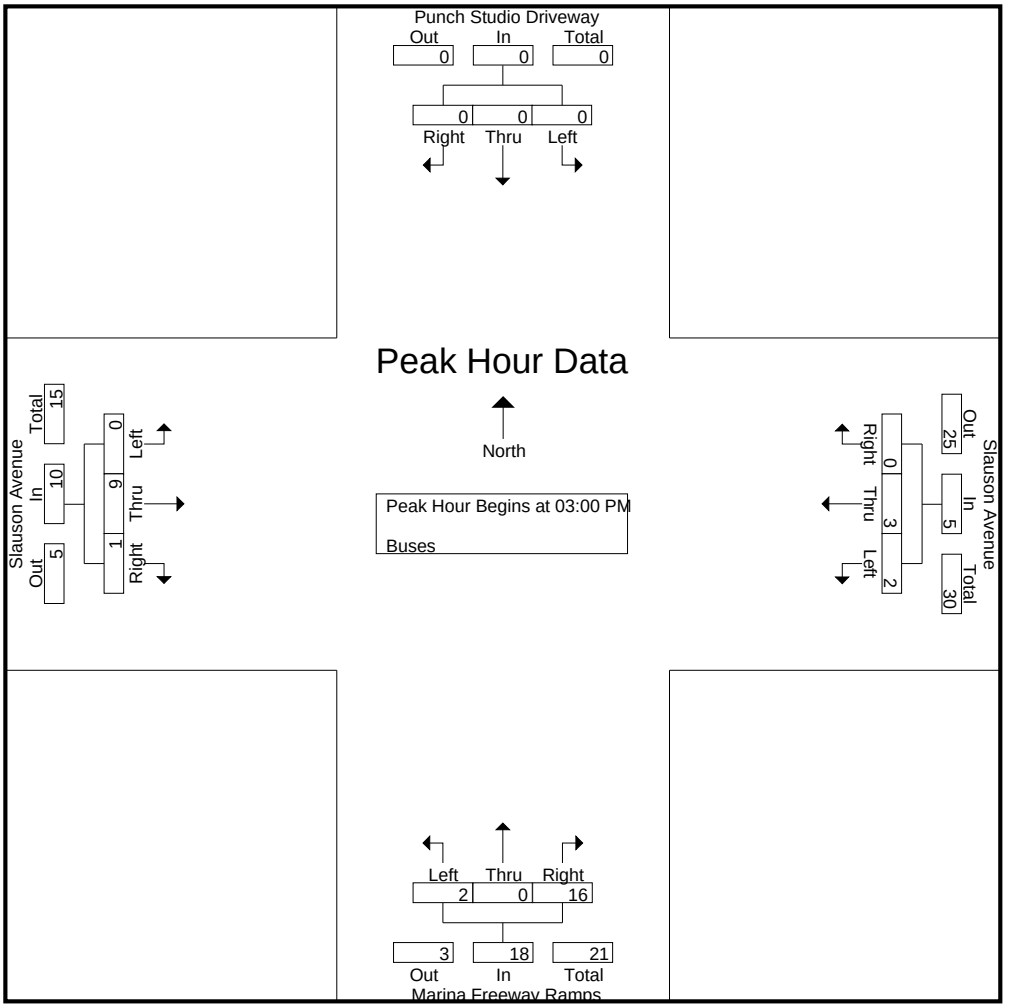

Peak Hour Analysis From 03:00 PM to 03:45 PM - Peak 1 of 1
Peak Hour for Each Approach Begins at:

	03:00 PM				03:00 PM				03:00 PM				03:00 PM			
+0 mins.	0	0	0	0	**1**	**2**	0	**3**	0	0	4	4	0	2	0	2
+15 mins.	0	0	0	0	1	0	0	1	0	0	**6**	**6**	0	2	0	2
+30 mins.	0	0	0	0	0	1	0	1	**1**	0	4	5	0	1	**1**	2
+45 mins.	0	0	0	0	0	0	0	0	1	0	2	3	0	**4**	0	**4**
Total Volume	0	0	0	0	2	3	0	5	2	0	16	18	0	9	1	10
% App. Total	0	0	0		40	60	0		11.1	0	88.9		0	90	10	
PHF	.000	.000	.000	.000	.500	.375	.000	.417	.500	.000	.667	.750	.000	.563	.250	.625

City Of Los Angeles
Department Of Transportation
MANUAL TRAFFIC COUNT SUMMARY

STREET:

North/South Marina Freeway (CA-90) Ramps

East/West Slauson Avenue

Day: Wednesday **Date:** November 25, 2018 **Weather:** CLEAR

Hours: 7-10AM 3-6PM **Staff:** CUI

School Day: YES **District:** Culver City I/S CODE 0

	N/B	S/B	E/B	W/B
DUAL-WHEELED	120	2	37	160
BIKES	0	0	12	9
BUSES	40	0	40	62

	N/B	TIME	S/B	TIME	E/B	TIME	W/B	TIME
AM PK 15 MIN	429	8.45	2	7.15	227	8.45	924	7.15
PM PK 15 MIN	479	4.15	13	4.00	292	3.00	411	3.00
AM PK HOUR	1666	8.00	5	7.00	856	8.30	3616	7.00
PM PK HOUR	1800	3.00	21	3.45	1078	3.00	1520	4.30

NORTHBOUND Approach

Hours	Lt	Th	Rt	Total
7-8	139	2	847	988
8-9	253	0	1413	1666
9-10	305	1	1084	1390
3-4	383	0	1417	1800
4-5	426	1	1242	1669
5-6	456	0	1266	1722
TOTAL	1962	4	7269	9235

SOUTHBOUND Approach

Hours	Lt	Th	Rt	Total
7-8	1	1	3	5
8-9	0	0	3	3
9-10	1	0	0	1
3-4	0	3	0	3
4-5	7	7	7	21
5-6	2	10	7	19
TOTAL	11	21	20	52

TOTAL	**XING S/L**		**XING N/L**	
N-S	Ped	Sch	Ped	Sch
993	2	0	0	0
1669	1	0	4	0
1391	0	0	4	0
1803	0	0	1	0
1690	1	0	1	0
1741	0	0	2	0
9287	4	0	12	0

EASTBOUND Approach

Hours	Lt	Th	Rt	Total
7-8	3	217	384	604
8-9	4	350	484	838
9-10	1	352	456	809
3-4	2	682	394	1078
4-5	2	530	472	1004
5-6	0	417	420	837
TOTAL	12	2548	2610	5170

WESTBOUND Approach

Hours	Lt	Th	Rt	Total
7-8	2508	1100	8	3616
8-9	2329	1051	10	3390
9-10	1396	530	2	1928
3-4	809	688	1	1498
4-5	776	702	1	1479
5-6	729	706	1	1436
TOTAL	8547	4777	23	13347

TOTAL	**XING W/L**		**XING E/L**	
E-W	Ped	Sch	Ped	Sch
4220	0	0	0	0
4228	0	0	0	0
2737	0	0	0	0
2576	0	0	0	0
2483	0	0	0	0
2273	0	0	0	0
18517	0	0	0	0

(Rev Oct 06)

City of Los Angeles
Department of Transportation

BICYCLE COUNT SUMMARY

STREET:

North/South:	Marina Freeway (CA-90) Ramps				
East/West:	Slauson Avenue				
Day:	Wednesday	Date:	11/25/2018	Weather:	CLEAR
School Day:	Yes	District:	Culver City	I/S Code:	0
Hours:	7-10 AM, 3-6 PM	Staff:	CUI		

NORTHBOUND Approach

Hours	Lt	Th	Rt	Total
7-8	0	0	0	0
8-9	0	0	0	0
9-10	0	0	0	0
3-4	0	0	0	0
4-5	0	0	0	0
5-6	0	0	0	0
TOTAL	0	0	0	0

SOUTHBOUND Approach

Hours	Lt	Th	Rt	Total
7-8	0	0	0	0
8-9	0	0	0	0
9-10	0	0	0	0
3-4	0	0	0	0
4-5	0	0	0	0
5-6	0	0	0	0
TOTAL	0	0	0	0

TOTAL

N-S
0
0
0
0
0
0
0

EASTBOUND Approach

Hours	Lt	Th	Rt	Total
7-8	0	0	0	0
8-9	0	7	0	7
9-10	0	1	0	1
3-4	0	3	0	3
4-5	0	1	0	1
5-6	0	0	0	0
TOTAL	0	12	0	12

WESTBOUND Approach

Hours	Lt	Th	Rt	Total
7-8	0	0	0	0
8-9	0	2	0	2
9-10	0	2	0	2
3-4	0	1	0	1
4-5	0	0	0	0
5-6	0	4	0	4
TOTAL	0	9	0	9

TOTAL

E-W
0
9
3
4
1
4
21

REMARKS (6 hour total):

	NB	SB	EB	WB	TOTAL
- Female Riders	0	0	0	2	2
- No helmet riders	0	0	6	4	10
- Sidewalk Riding	0	0	9	3	12
- Wrong way riding	0	0	8	0	8

NB: Northbound, **SB**: Southbound, **EB**: Eastbound, **WB**: Westbound, **I/S**: Intersection

Source: CUI

LADOT 2015 CMP

City of Los Angeles
Department of Transportation

PEDESTRIAN COUNT SUMMARY

STREET:

North/South:	Marina Freeway (CA-90) Ramps				
East/West:	Slauson Avenue				
Day:	Wednesday	Date:	################	Weather:	CLEAR
School Day:	YES	District:	Culver City	I/S Code:	0
Hours:	7-10 AM, 3-6 PM	Staff:	CUI		

AM PEAK PERIOD

15 Min. Interval	N-LEG	S-LEG	E-LEG	W-LEG	TOTAL
7:00-7:15	0	0	0	0	0
7:15-7:30	0	0	0	0	0
7:30-7:45	0	0	0	0	0
7:45-8:00	0	2	0	0	2
8:00-8:15	0	0	0	0	0
8:15-8:30	3	0	0	0	3
8:30-8:45	1	1	0	0	2
8:45-9:00	0	0	0	0	0
9:00-9:15	2	0	0	0	2
9:15-9:30	0	0	0	0	0
9:30-9:45	1	0	0	0	1
9:45-10:00	1	0	0	0	1
Hours					
7 - 8	0	2	0	0	2
8 - 9	4	1	0	0	5
9 - 10	4	0	0	0	4
TOTAL	8	3	0	0	11

PM PEAK PERIOD

15 Min. Interval	N-LEG	S-LEG	E-LEG	W-LEG	TOTAL
3:00-3:15	0	0	0	0	0
3:15-3:30	1	0	0	0	1
3:30-3:45	0	0	0	0	0
3:45-4:00	0	0	0	0	0
4:00-4:15	0	0	0	0	0
4:15-4:30	0	2	0	0	2
4:30-4:45	1	0	0	0	1
4:45-5:00	0	0	0	0	0
5:00-5:15	0	0	0	0	0
5:15-5:30	2	0	0	0	2
5:30-5:45	0	0	0	0	0
5:45-6:00	0	0	0	0	0
Hours					
3 - 4	1	0	0	0	1
4 - 5	1	2	0	0	3
5 - 6	2	0	0	0	2
	4	2	0	0	6

REMARKS (6 hour total):

	N-LEG	S-LEG	E-LEG	W-LEG	TOTAL
- Wheelchair/special needs assistance	1	0	0	0	1
- Skateboard/scooter	0	0	0	0	0

N: North, **S**: South, **E**: East, **W**: West, **I/S**: Intersection

Source: LADOT 2015 CMP

Counts Unlimited
PO Box 1178
Corona, CA 92878
(951) 268-6268

City of Culver City
N/S: Sepulveda Boulevard
E/W: Centinela Avenue
Weather: Clear

File Name : 07_CVC_Sepulveda_Centinela AM
Site Code : 16618886
Start Date : 11/28/2018
Page No : 1

Groups Printed- Passenger Vehicles - Dual Wheeled - Buses

	Sepulveda Boulevard Southbound				Centinela Avenue Westbound				Sepulveda Boulevard Northbound				Centinela Avenue Eastbound				
Start Time	Left	Thru	Right	App. Total	Left	Thru	Right	App. Total	Left	Thru	Right	App. Total	Left	Thru	Right	App. Total	Int. Total
07:00 AM	6	104	36	146	40	204	27	271	191	336	29	556	7	31	48	86	1059
07:15 AM	7	108	28	143	29	180	23	232	268	376	48	692	11	42	64	117	1184
07:30 AM	6	168	56	230	52	171	21	244	253	346	39	638	20	58	81	159	1271
07:45 AM	8	173	51	232	73	258	17	348	260	286	71	617	6	83	111	200	1397
Total	27	553	171	751	194	813	88	1095	972	1344	187	2503	44	214	304	562	4911
08:00 AM	17	199	49	265	49	164	16	229	263	299	82	644	32	82	141	255	1393
08:15 AM	19	190	49	258	80	205	19	304	247	275	88	610	24	81	123	228	1400
08:30 AM	22	151	40	213	35	167	14	216	282	327	72	681	17	61	122	200	1310
08:45 AM	15	195	82	292	64	173	15	252	222	281	71	574	27	73	127	227	1345
Total	73	735	220	1028	228	709	64	1001	1014	1182	313	2509	100	297	513	910	5448
09:00 AM	12	169	88	269	40	184	19	243	247	316	53	616	20	52	91	163	1291
09:15 AM	24	194	68	286	62	151	28	241	225	280	58	563	25	55	80	160	1250
09:30 AM	16	126	52	194	51	188	25	264	190	362	60	612	22	67	77	166	1236
09:45 AM	12	131	36	179	53	177	29	259	148	313	51	512	15	61	90	166	1116
Total	64	620	244	928	206	700	101	1007	810	1271	222	2303	82	235	338	655	4893
Grand Total	164	1908	635	2707	628	2222	253	3103	2796	3797	722	7315	226	746	1155	2127	15252
Apprch %	6.1	70.5	23.5		20.2	71.6	8.2		38.2	51.9	9.9		10.6	35.1	54.3		
Total %	1.1	12.5	4.2	17.7	4.1	14.6	1.7	20.3	18.3	24.9	4.7	48	1.5	4.9	7.6	13.9	
Passenger Vehicles	157	1845	603	2605	621	2172	240	3033	2732	3720	716	7168	211	715	1124	2050	14856
% Passenger Vehicles	95.7	96.7	95	96.2	98.9	97.7	94.9	97.7	97.7	98	99.2	98	93.4	95.8	97.3	96.4	97.4
Dual Wheeled	5	33	20	58	5	41	8	54	58	37	6	101	8	25	27	60	273
% Dual Wheeled	3	1.7	3.1	2.1	0.8	1.8	3.2	1.7	2.1	1	0.8	1.4	3.5	3.4	2.3	2.8	1.8
Buses	2	30	12	44	2	9	5	16	6	40	0	46	7	6	4	17	123
% Buses	1.2	1.6	1.9	1.6	0.3	0.4	2	0.5	0.2	1.1	0	0.6	3.1	0.8	0.3	0.8	0.8

	Sepulveda Boulevard Southbound				Centinela Avenue Westbound				Sepulveda Boulevard Northbound				Centinela Avenue Eastbound				
Start Time	Left	Thru	Right	App. Total	Left	Thru	Right	App. Total	Left	Thru	Right	App. Total	Left	Thru	Right	App. Total	Int. Total
Peak Hour Analysis From 07:00 AM to 09:45 AM - Peak 1 of 1																	
Peak Hour for Entire Intersection Begins at 07:45 AM																	
07:45 AM	8	173	**51**	232	73	**258**	17	**348**	260	286	71	617	6	**83**	111	200	1397
08:00 AM	17	**199**	49	**265**	49	164	16	229	263	299	82	644	**32**	82	**141**	**255**	1393
08:15 AM	19	190	49	258	**80**	205	**19**	304	247	275	**88**	610	24	81	123	228	**1400**
08:30 AM	**22**	151	40	213	35	167	14	216	**282**	**327**	72	**681**	17	61	122	200	1310
Total Volume	66	713	189	968	237	794	66	1097	1052	1187	313	2552	79	307	497	883	5500
% App. Total	6.8	73.7	19.5		21.6	72.4	6		41.2	46.5	12.3		8.9	34.8	56.3		
PHF	.750	.896	.926	.913	.741	.769	.868	.788	.933	.907	.889	.937	.617	.925	.881	.866	.982

Counts Unlimited
PO Box 1178
Corona, CA 92878
(951) 268-6268

City of Culver City
N/S: Sepulveda Boulevard
E/W: Centinela Avenue
Weather: Clear

File Name : 07_CVC_Sepulveda_Centinela AM
Site Code : 16618886
Start Date : 11/28/2018
Page No : 2

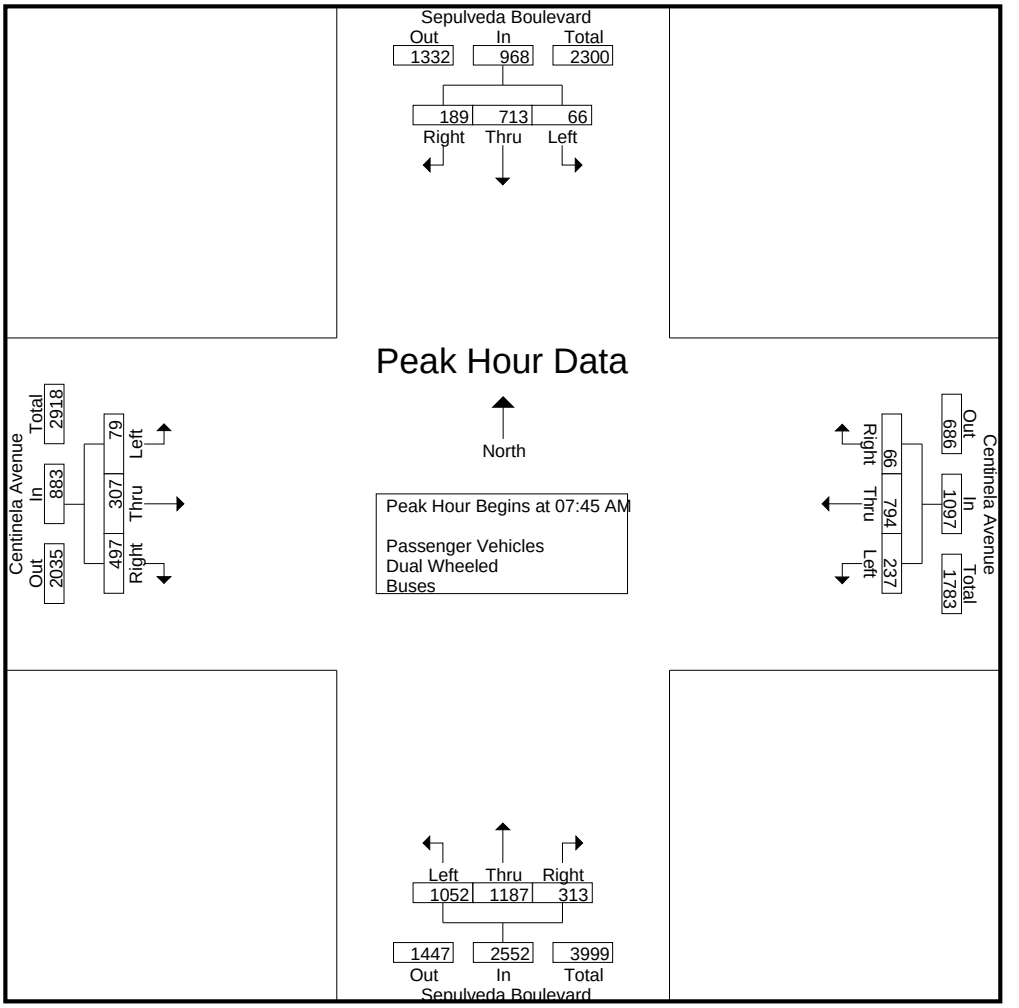

Peak Hour Analysis From 07:00 AM to 09:45 AM - Peak 1 of 1
Peak Hour for Each Approach Begins at:

	08:30 AM				07:30 AM				07:15 AM				08:00 AM			
+0 mins.	22	151	40	213	52	171	**21**	244	**268**	**376**	48	**692**	**32**	**82**	**141**	**255**
+15 mins.	15	**195**	82	**292**	73	**258**	17	**348**	253	346	39	638	24	81	123	228
+30 mins.	12	169	**88**	269	49	164	16	229	260	286	71	617	17	61	122	200
+45 mins.	**24**	194	68	286	**80**	205	19	304	263	299	**82**	644	27	73	127	227
Total Volume	73	709	278	1060	254	798	73	1125	1044	1307	240	2591	100	297	513	910
% App. Total	6.9	66.9	26.2		22.6	70.9	6.5		40.3	50.4	9.3		11	32.6	56.4	
PHF	.760	.909	.790	.908	.794	.773	.869	.808	.974	.869	.732	.936	.781	.905	.910	.892

Counts Unlimited
PO Box 1178
Corona, CA 92878
(951) 268-6268

City of Culver City
N/S: Sepulveda Boulevard
E/W: Centinela Avenue
Weather: Clear

File Name : 07_CVC_Sepulveda_Centinela AM
Site Code : 16618886
Start Date : 11/28/2018
Page No : 1

Groups Printed- Passenger Vehicles

	Sepulveda Boulevard Southbound				Centinela Avenue Westbound				Sepulveda Boulevard Northbound				Centinela Avenue Eastbound				
Start Time	Left	Thru	Right	App. Total	Left	Thru	Right	App. Total	Left	Thru	Right	App. Total	Left	Thru	Right	App. Total	Int. Total
07:00 AM	6	101	34	141	39	201	24	264	187	332	29	548	6	31	47	84	1037
07:15 AM	7	105	25	137	29	177	23	229	266	366	48	680	11	41	63	115	1161
07:30 AM	6	161	52	219	50	165	21	236	243	343	38	624	17	55	77	149	1228
07:45 AM	5	170	47	222	73	251	14	338	253	279	71	603	6	83	109	198	1361
Total	24	537	158	719	191	794	82	1067	949	1320	186	2455	40	210	296	546	4787
08:00 AM	17	188	45	250	49	159	15	223	256	288	81	625	31	79	137	247	1345
08:15 AM	19	181	48	248	80	202	17	299	239	271	88	598	23	80	121	224	1369
08:30 AM	22	146	38	206	34	163	14	211	280	320	72	672	15	59	122	196	1285
08:45 AM	14	194	80	288	64	169	14	247	220	272	71	563	27	69	123	219	1317
Total	72	709	211	992	227	693	60	980	995	1151	312	2458	96	287	503	886	5316
09:00 AM	11	166	85	262	40	179	17	236	241	312	53	606	19	47	90	156	1260
09:15 AM	23	186	65	274	60	148	28	236	219	275	56	550	22	52	76	150	1210
09:30 AM	16	123	49	188	50	184	25	259	183	352	59	594	21	63	74	158	1199
09:45 AM	11	124	35	170	53	174	28	255	145	310	50	505	13	56	85	154	1084
Total	61	599	234	894	203	685	98	986	788	1249	218	2255	75	218	325	618	4753
Grand Total	157	1845	603	2605	621	2172	240	3033	2732	3720	716	7168	211	715	1124	2050	14856
Apprch %	6	70.8	23.1		20.5	71.6	7.9		38.1	51.9	10		10.3	34.9	54.8		
Total %	1.1	12.4	4.1	17.5	4.2	14.6	1.6	20.4	18.4	25	4.8	48.2	1.4	4.8	7.6	13.8	

	Sepulveda Boulevard Southbound				Centinela Avenue Westbound				Sepulveda Boulevard Northbound				Centinela Avenue Eastbound				
Start Time	Left	Thru	Right	App. Total	Left	Thru	Right	App. Total	Left	Thru	Right	App. Total	Left	Thru	Right	App. Total	Int. Total
Peak Hour Analysis From 07:45 AM to 08:30 AM - Peak 1 of 1																	
Peak Hour for Entire Intersection Begins at 07:45 AM																	
07:45 AM	5	170	47	222	73	**251**	14	**338**	253	279	71	603	6	**83**	109	198	1361
08:00 AM	17	**188**	45	**250**	49	159	15	223	256	288	81	625	**31**	79	**137**	**247**	1345
08:15 AM	19	181	**48**	248	**80**	202	**17**	299	239	271	**88**	598	23	80	121	224	**1369**
08:30 AM	**22**	146	38	206	34	163	14	211	**280**	**320**	72	**672**	15	59	122	196	1285
Total Volume	63	685	178	926	236	775	60	1071	1028	1158	312	2498	75	301	489	865	5360
% App. Total	6.8	74	19.2		22	72.4	5.6		41.2	46.4	12.5		8.7	34.8	56.5		
PHF	.716	.911	.927	.926	.738	.772	.882	.792	.918	.905	.886	.929	.605	.907	.892	.876	.979

Counts Unlimited
PO Box 1178
Corona, CA 92878
(951) 268-6268

City of Culver City
N/S: Sepulveda Boulevard
E/W: Centinela Avenue
Weather: Clear

File Name : 07_CVC_Sepulveda_Centinela AM
Site Code : 16618886
Start Date : 11/28/2018
Page No : 2

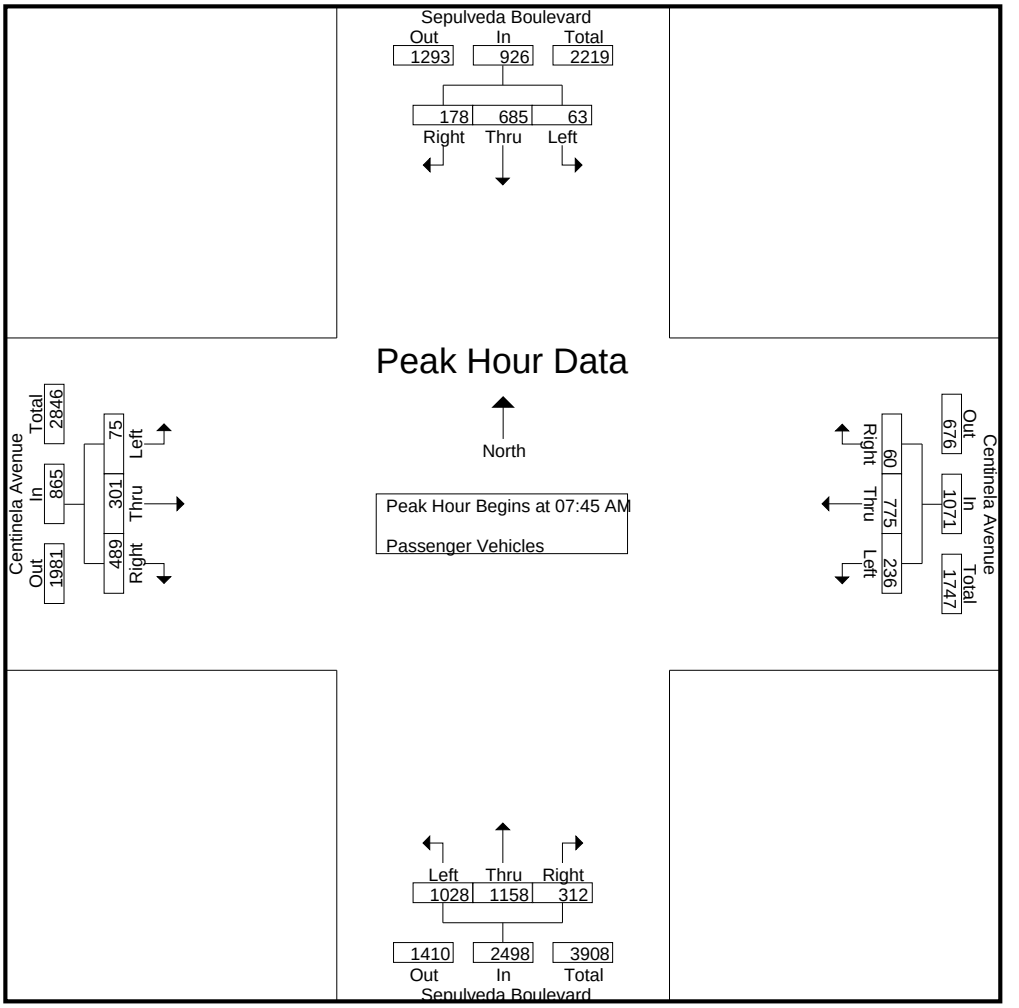

Peak Hour Analysis From 07:45 AM to 08:30 AM - Peak 1 of 1
Peak Hour for Each Approach Begins at:

	07:45 AM				07:45 AM				07:45 AM				07:45 AM			
+0 mins.	5	170	47	222	73	**251**	14	**338**	253	279	71	603	6	**83**	109	198
+15 mins.	17	**188**	45	**250**	49	159	15	223	256	288	81	625	**31**	79	**137**	**247**
+30 mins.	19	181	**48**	248	**80**	202	**17**	299	239	271	**88**	598	23	80	121	224
+45 mins.	**22**	146	38	206	34	163	14	211	**280**	**320**	72	**672**	15	59	122	196
Total Volume	63	685	178	926	236	775	60	1071	1028	1158	312	2498	75	301	489	865
% App. Total	6.8	74	19.2		22	72.4	5.6		41.2	46.4	12.5		8.7	34.8	56.5	
PHF	.716	.911	.927	.926	.738	.772	.882	.792	.918	.905	.886	.929	.605	.907	.892	.876

Counts Unlimited
PO Box 1178
Corona, CA 92878
(951) 268-6268

City of Culver City
N/S: Sepulveda Boulevard
E/W: Centinela Avenue
Weather: Clear

File Name : 07_CVC_Sepulveda_Centinela AM
Site Code : 16618886
Start Date : 11/28/2018

Groups Printed- Dual Wheeled

	Sepulveda Boulevard Southbound				Centinela Avenue Westbound				Sepulveda Boulevard Northbound				Centinela Avenue Eastbound				
Start Time	Left	Thru	Right	App. Total	Left	Thru	Right	App. Total	Left	Thru	Right	App. Total	Left	Thru	Right	App. Total	Int. Total
07:00 AM	0	0	1	1	1	2	2	5	3	2	0	5	0	0	1	1	12
07:15 AM	0	1	2	3	0	2	0	2	2	5	0	7	0	1	1	2	14
07:30 AM	0	5	2	7	0	5	0	5	9	1	1	11	1	3	4	8	31
07:45 AM	1	1	3	5	0	5	3	8	7	6	0	13	0	0	1	1	27
Total	1	7	8	16	1	14	5	20	21	14	1	36	1	4	7	12	84
08:00 AM	0	7	4	11	0	4	0	4	6	4	1	11	0	1	2	3	29
08:15 AM	0	5	0	5	0	3	1	4	8	2	0	10	1	0	1	2	21
08:30 AM	0	2	2	4	1	3	0	4	2	3	0	5	2	1	0	3	16
08:45 AM	1	0	0	1	0	3	0	3	2	5	0	7	0	3	4	7	18
Total	1	14	6	21	1	13	1	15	18	14	1	33	3	5	7	15	84
09:00 AM	1	1	1	3	0	4	1	5	4	0	0	4	0	5	1	6	18
09:15 AM	1	5	3	9	2	3	0	5	5	2	2	9	3	3	4	10	33
09:30 AM	0	1	1	2	1	4	0	5	7	7	1	15	0	3	3	6	28
09:45 AM	1	5	1	7	0	3	1	4	3	0	1	4	1	5	5	11	26
Total	3	12	6	21	3	14	2	19	19	9	4	32	4	16	13	33	105
Grand Total	5	33	20	58	5	41	8	54	58	37	6	101	8	25	27	60	273
Apprch %	8.6	56.9	34.5		9.3	75.9	14.8		57.4	36.6	5.9		13.3	41.7	45		
Total %	1.8	12.1	7.3	21.2	1.8	15	2.9	19.8	21.2	13.6	2.2	37	2.9	9.2	9.9	22	

	Sepulveda Boulevard Southbound				Centinela Avenue Westbound				Sepulveda Boulevard Northbound				Centinela Avenue Eastbound				
Start Time	Left	Thru	Right	App. Total	Left	Thru	Right	App. Total	Left	Thru	Right	App. Total	Left	Thru	Right	App. Total	Int. Total
Peak Hour Analysis From 07:45 AM to 08:30 AM - Peak 1 of 1																	
Peak Hour for Entire Intersection Begins at 07:45 AM																	
07:45 AM	**1**	1	3	5	0	**5**	**3**	**8**	7	**6**	0	**13**	0	0	1	1	27
08:00 AM	0	**7**	**4**	**11**	0	4	0	4	6	4	**1**	11	0	**1**	**2**	**3**	**29**
08:15 AM	0	5	0	5	0	3	1	4	**8**	2	0	10	1	0	1	2	21
08:30 AM	0	2	2	4	**1**	3	0	4	2	3	0	5	**2**	1	0	3	16
Total Volume	1	15	9	25	1	15	4	20	23	15	1	39	3	2	4	9	93
% App. Total	4	60	36		5	75	20		59	38.5	2.6		33.3	22.2	44.4		
PHF	.250	.536	.563	.568	.250	.750	.333	.625	.719	.625	.250	.750	.375	.500	.500	.750	.802

Counts Unlimited
PO Box 1178
Corona, CA 92878
(951) 268-6268

City of Culver City
N/S: Sepulveda Boulevard
E/W: Centinela Avenue
Weather: Clear

File Name : 07_CVC_Sepulveda_Centinela AM
Site Code : 16618886
Start Date : 11/28/2018
Page No : 2

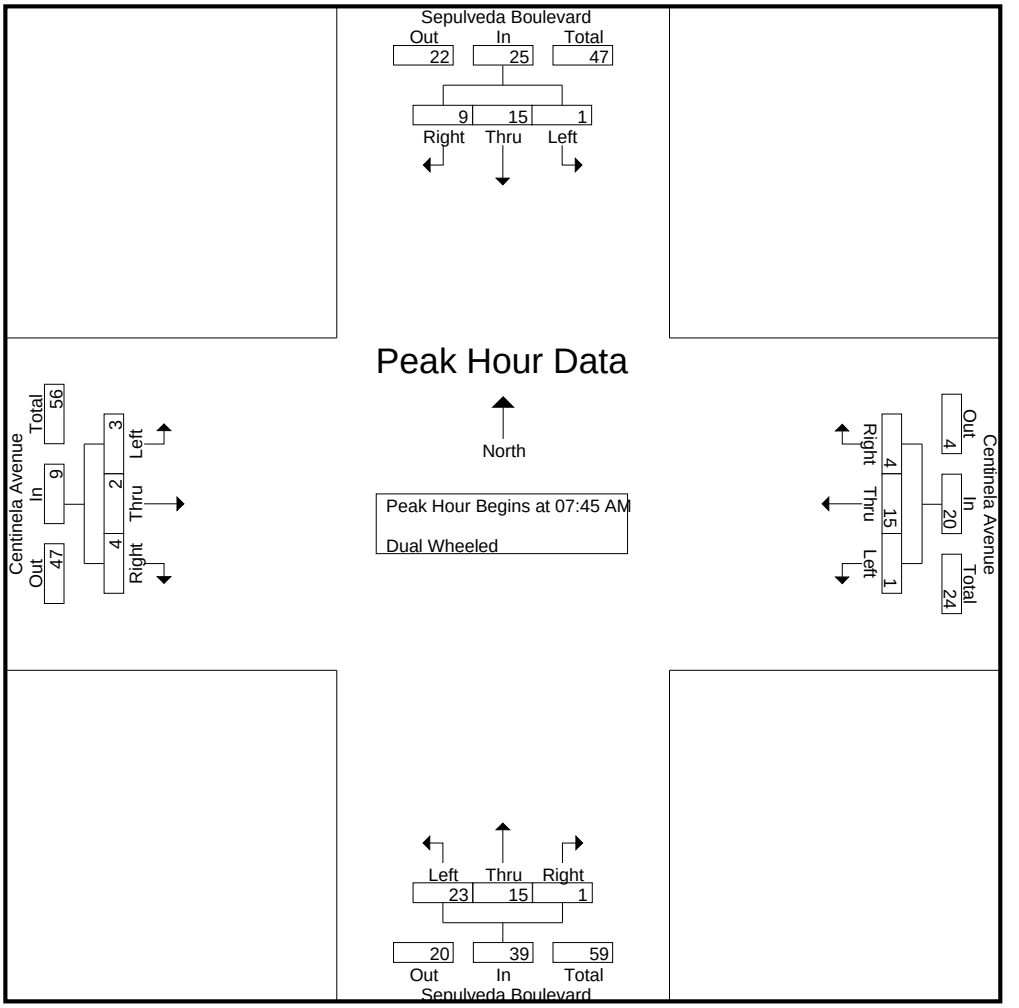

Peak Hour Analysis From 07:45 AM to 08:30 AM - Peak 1 of 1
Peak Hour for Each Approach Begins at:

	07:45 AM				07:45 AM				07:45 AM				07:45 AM			
+0 mins.	**1**	1	3	5	0	**5**	**3**	**8**	7	**6**	0	**13**	0	0	1	1
+15 mins.	0	**7**	**4**	**11**	0	4	0	4	6	4	**1**	11	0	**1**	**2**	**3**
+30 mins.	0	5	0	5	0	3	1	4	**8**	2	0	10	1	0	1	2
+45 mins.	0	2	2	4	**1**	3	0	4	2	3	0	5	**2**	1	0	3
Total Volume	1	15	9	25	1	15	4	20	23	15	1	39	3	2	4	9
% App. Total	4	60	36		5	75	20		59	38.5	2.6		33.3	22.2	44.4	
PHF	.250	.536	.563	.568	.250	.750	.333	.625	.719	.625	.250	.750	.375	.500	.500	.750

Counts Unlimited
PO Box 1178
Corona, CA 92878
(951) 268-6268

City of Culver City
N/S: Sepulveda Boulevard
E/W: Centinela Avenue
Weather: Clear

File Name : 07_CVC_Sepulveda_Centinela AM
Site Code : 16618886
Start Date : 11/28/2018
Page No : 1

Groups Printed- Buses

	Sepulveda Boulevard Southbound				Centinela Avenue Westbound				Sepulveda Boulevard Northbound				Centinela Avenue Eastbound				
Start Time	Left	Thru	Right	App. Total	Left	Thru	Right	App. Total	Left	Thru	Right	App. Total	Left	Thru	Right	App. Total	Int. Total
07:00 AM	0	3	1	4	0	1	1	2	1	2	0	3	1	0	0	1	10
07:15 AM	0	2	1	3	0	1	0	1	0	5	0	5	0	0	0	0	9
07:30 AM	0	2	2	4	2	1	0	3	1	2	0	3	2	0	0	2	12
07:45 AM	2	2	1	5	0	2	0	2	0	1	0	1	0	0	1	1	9
Total	2	9	5	16	2	5	1	8	2	10	0	12	3	0	1	4	40
08:00 AM	0	4	0	4	0	1	1	2	1	7	0	8	1	2	2	5	19
08:15 AM	0	4	1	5	0	0	1	1	0	2	0	2	0	1	1	2	10
08:30 AM	0	3	0	3	0	1	0	1	0	4	0	4	0	1	0	1	9
08:45 AM	0	1	2	3	0	1	1	2	0	4	0	4	0	1	0	1	10
Total	0	12	3	15	0	3	3	6	1	17	0	18	1	5	3	9	48
09:00 AM	0	2	2	4	0	1	1	2	2	4	0	6	1	0	0	1	13
09:15 AM	0	3	0	3	0	0	0	0	1	3	0	4	0	0	0	0	7
09:30 AM	0	2	2	4	0	0	0	0	0	3	0	3	1	1	0	2	9
09:45 AM	0	2	0	2	0	0	0	0	0	3	0	3	1	0	0	1	6
Total	0	9	4	13	0	1	1	2	3	13	0	16	3	1	0	4	35
Grand Total	2	30	12	44	2	9	5	16	6	40	0	46	7	6	4	17	123
Apprch %	4.5	68.2	27.3		12.5	56.2	31.2		13	87	0		41.2	35.3	23.5		
Total %	1.6	24.4	9.8	35.8	1.6	7.3	4.1	13	4.9	32.5	0	37.4	5.7	4.9	3.3	13.8	

	Sepulveda Boulevard Southbound				Centinela Avenue Westbound				Sepulveda Boulevard Northbound				Centinela Avenue Eastbound				
Start Time	Left	Thru	Right	App. Total	Left	Thru	Right	App. Total	Left	Thru	Right	App. Total	Left	Thru	Right	App. Total	Int. Total
Peak Hour Analysis From 07:45 AM to 08:30 AM - Peak 1 of 1																	
Peak Hour for Entire Intersection Begins at 07:45 AM																	
07:45 AM	**2**	2	**1**	**5**	0	**2**	0	**2**	0	1	0	1	0	0	1	1	9
08:00 AM	0	**4**	0	4	0	1	**1**	2	**1**	**7**	0	**8**	**1**	**2**	**2**	**5**	**19**
08:15 AM	0	4	1	5	0	0	1	1	0	2	0	2	0	1	1	2	10
08:30 AM	0	3	0	3	0	1	0	1	0	4	0	4	0	1	0	1	9
Total Volume	2	13	2	17	0	4	2	6	1	14	0	15	1	4	4	9	47
% App. Total	11.8	76.5	11.8		0	66.7	33.3		6.7	93.3	0		11.1	44.4	44.4		
PHF	.250	.813	.500	.850	.000	.500	.500	.750	.250	.500	.000	.469	.250	.500	.500	.450	.618

Counts Unlimited
PO Box 1178
Corona, CA 92878
(951) 268-6268

City of Culver City
N/S: Sepulveda Boulevard
E/W: Centinela Avenue
Weather: Clear

File Name : 07_CVC_Sepulveda_Centinela AM
Site Code : 16618886
Start Date : 11/28/2018
Page No : 2

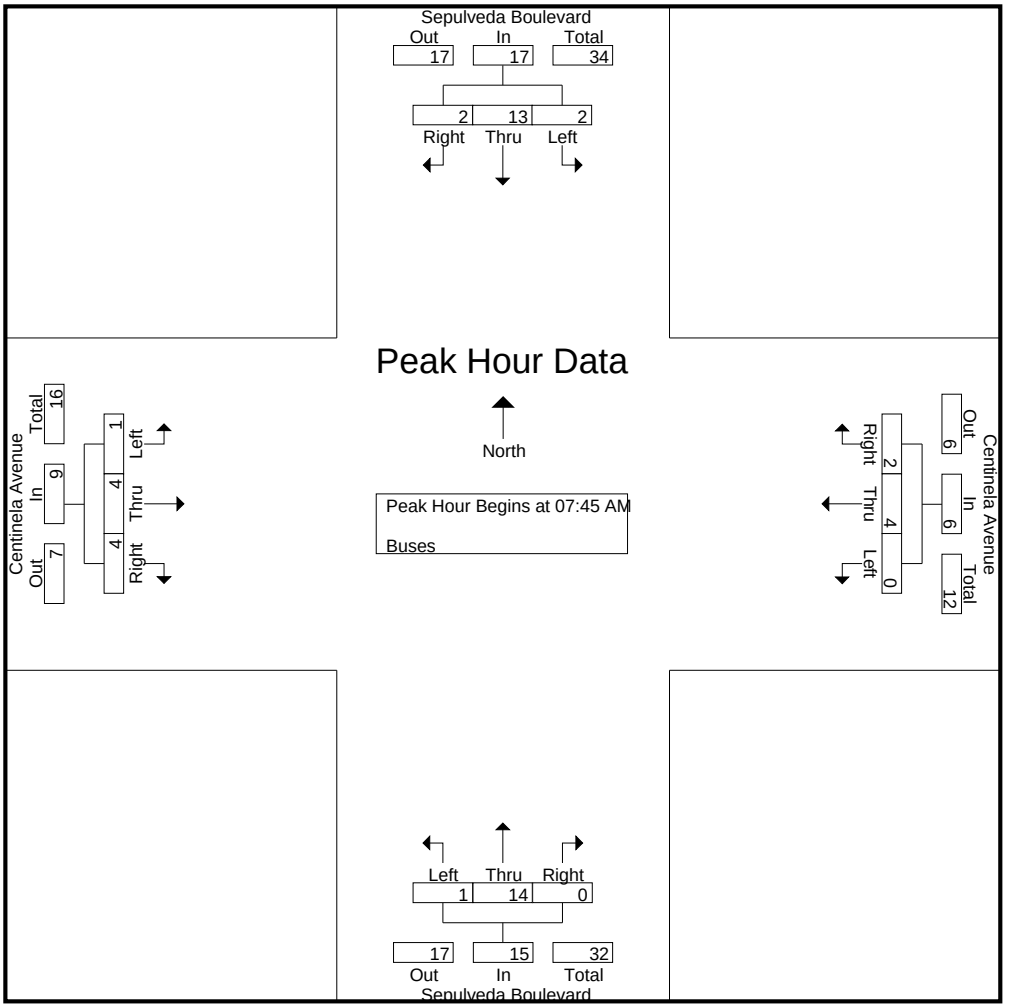

Peak Hour Analysis From 07:45 AM to 08:30 AM - Peak 1 of 1
Peak Hour for Each Approach Begins at:

	07:45 AM				07:45 AM				07:45 AM				07:45 AM			
+0 mins.	**2**	2	**1**	**5**	0	**2**	0	**2**	0	1	0	1	0	0	1	1
+15 mins.	0	**4**	0	4	0	1	**1**	2	**1**	**7**	0	**8**	**1**	**2**	**2**	**5**
+30 mins.	0	4	1	5	0	0	1	1	0	2	0	2	0	1	1	2
+45 mins.	0	3	0	3	0	1	0	1	0	4	0	4	0	1	0	1
Total Volume	2	13	2	17	0	4	2	6	1	14	0	15	1	4	4	9
% App. Total	11.8	76.5	11.8		0	66.7	33.3		6.7	93.3	0		11.1	44.4	44.4	
PHF	.250	.813	.500	.850	.000	.500	.500	.750	.250	.500	.000	.469	.250	.500	.500	.450

Counts Unlimited
PO Box 1178
Corona, CA 92878
(951) 268-6268

City of Culver City
N/S: Sepulveda Boulevard
E/W: Centinela Avenue
Weather: Clear

File Name : 07_CVC_Sepulveda_Centinela PM
Site Code : 16618886
Start Date : 11/28/2018

Groups Printed- Passenger Vehicles - Dual Wheeled - Buses

	Sepulveda Boulevard Southbound				Centinela Avenue Westbound				Sepulveda Boulevard Northbound				Centinela Avenue Eastbound				
Start Time	Left	Thru	Right	App. Total	Left	Thru	Right	App. Total	Left	Thru	Right	App. Total	Left	Thru	Right	App. Total	Int. Total
03:00 PM	38	309	32	379	83	61	25	169	92	180	66	338	28	145	162	335	1221
03:15 PM	46	288	16	350	76	79	37	192	90	179	77	346	26	137	211	374	1262
03:30 PM	46	358	26	430	71	73	38	182	82	192	67	341	28	155	209	392	1345
03:45 PM	57	331	26	414	94	80	33	207	81	167	58	306	20	159	236	415	1342
Total	187	1286	100	1573	324	293	133	750	345	718	268	1331	102	596	818	1516	5170
04:00 PM	42	341	36	419	78	84	36	198	90	177	78	345	25	189	322	536	1498
04:15 PM	53	403	34	490	72	72	22	166	81	165	55	301	33	162	244	439	1396
04:30 PM	47	355	19	421	88	84	26	198	108	209	71	388	25	192	313	530	1537
04:45 PM	52	410	27	489	69	63	31	163	96	186	109	391	15	159	248	422	1465
Total	194	1509	116	1819	307	303	115	725	375	737	313	1425	98	702	1127	1927	5896
05:00 PM	55	347	30	432	104	89	31	224	98	210	83	391	35	183	276	494	1541
05:15 PM	55	347	18	420	88	66	18	172	109	273	86	468	30	156	303	489	1549
05:30 PM	36	402	25	463	93	59	18	170	77	174	90	341	46	154	248	448	1422
05:45 PM	43	375	31	449	81	61	27	169	112	245	83	440	10	172	283	465	1523
Total	189	1471	104	1764	366	275	94	735	396	902	342	1640	121	665	1110	1896	6035
Grand Total	570	4266	320	5156	997	871	342	2210	1116	2357	923	4396	321	1963	3055	5339	17101
Apprch %	11.1	82.7	6.2		45.1	39.4	15.5		25.4	53.6	21		6	36.8	57.2		
Total %	3.3	24.9	1.9	30.2	5.8	5.1	2	12.9	6.5	13.8	5.4	25.7	1.9	11.5	17.9	31.2	
Passenger Vehicles	562	4194	300	5056	986	852	333	2171	1104	2316	916	4336	310	1937	3013	5260	16823
% Passenger Vehicles	98.6	98.3	93.8	98.1	98.9	97.8	97.4	98.2	98.9	98.3	99.2	98.6	96.6	98.7	98.6	98.5	98.4
Dual Wheeled	6	36	5	47	9	14	5	28	9	12	3	24	4	22	33	59	158
% Dual Wheeled	1.1	0.8	1.6	0.9	0.9	1.6	1.5	1.3	0.8	0.5	0.3	0.5	1.2	1.1	1.1	1.1	0.9
Buses	2	36	15	53	2	5	4	11	3	29	4	36	7	4	9	20	120
% Buses	0.4	0.8	4.7	1	0.2	0.6	1.2	0.5	0.3	1.2	0.4	0.8	2.2	0.2	0.3	0.4	0.7

	Sepulveda Boulevard Southbound				Centinela Avenue Westbound				Sepulveda Boulevard Northbound				Centinela Avenue Eastbound				
Start Time	Left	Thru	Right	App. Total	Left	Thru	Right	App. Total	Left	Thru	Right	App. Total	Left	Thru	Right	App. Total	Int. Total
Peak Hour Analysis From 03:00 PM to 05:45 PM - Peak 1 of 1																	
Peak Hour for Entire Intersection Begins at 04:30 PM																	
04:30 PM	47	355	19	421	88	84	26	198	108	209	71	388	25	**192**	**313**	**530**	1537
04:45 PM	52	**410**	27	**489**	69	63	**31**	163	96	186	**109**	391	15	159	248	422	1465
05:00 PM	**55**	347	**30**	432	**104**	**89**	31	**224**	98	210	83	391	**35**	183	276	494	1541
05:15 PM	55	347	18	420	88	66	18	172	**109**	**273**	86	**468**	30	156	303	489	**1549**
Total Volume	209	1459	94	1762	349	302	106	757	411	878	349	1638	105	690	1140	1935	6092
% App. Total	11.9	82.8	5.3		46.1	39.9	14		25.1	53.6	21.3		5.4	35.7	58.9		
PHF	.950	.890	.783	.901	.839	.848	.855	.845	.943	.804	.800	.875	.750	.898	.911	.913	.983

Counts Unlimited
PO Box 1178
Corona, CA 92878
(951) 268-6268

City of Culver City
N/S: Sepulveda Boulevard
E/W: Centinela Avenue
Weather: Clear

File Name : 07_CVC_Sepulveda_Centinela PM
Site Code : 16618886
Start Date : 11/28/2018
Page No : 2

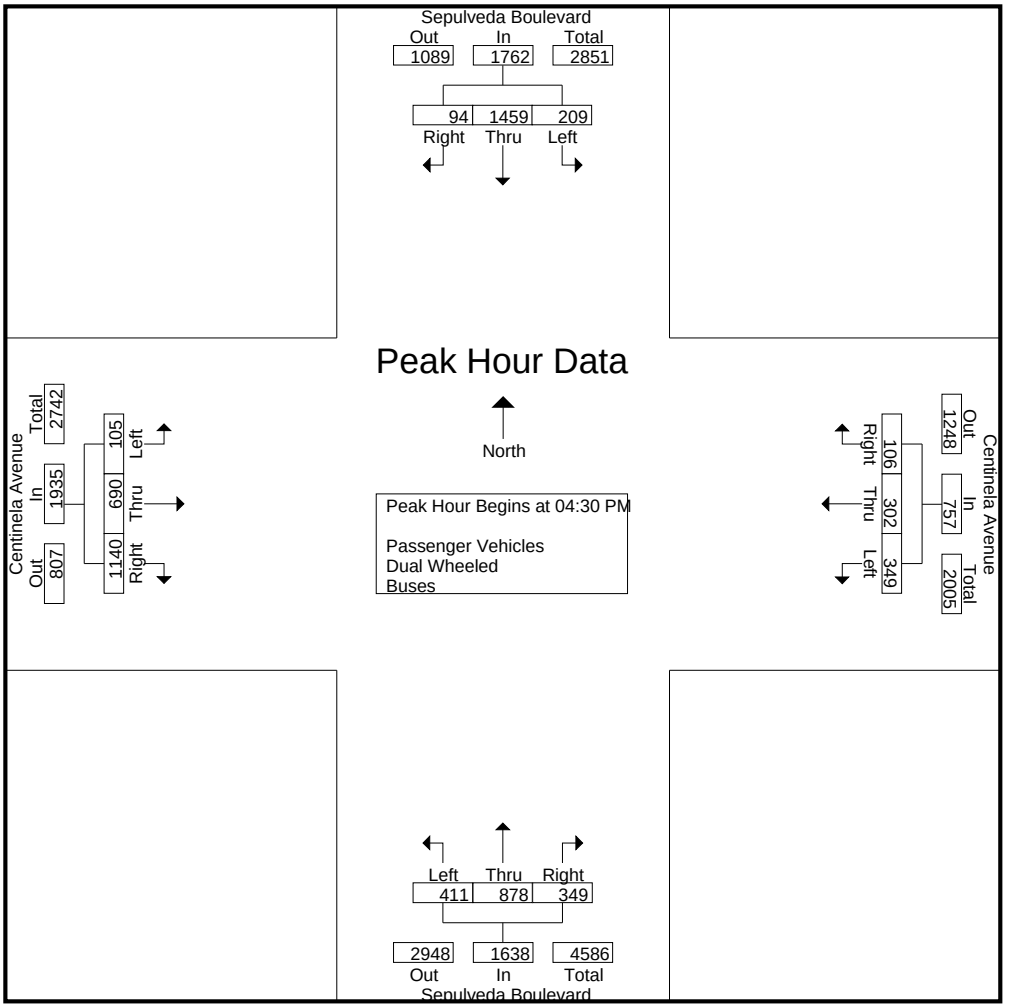

Peak Hour Analysis From 03:00 PM to 05:45 PM - Peak 1 of 1
Peak Hour for Each Approach Begins at:

	04:15 PM				03:15 PM				05:00 PM				04:30 PM			
+0 mins.	53	403	**34**	**490**	76	79	37	192	98	210	83	391	25	**192**	**313**	**530**
+15 mins.	47	355	19	421	71	73	**38**	182	109	**273**	86	**468**	15	159	248	422
+30 mins.	52	**410**	27	489	**94**	80	33	**207**	77	174	**90**	341	**35**	183	276	494
+45 mins.	**55**	347	30	432	78	**84**	36	198	**112**	245	83	440	30	156	303	489
Total Volume	207	1515	110	1832	319	316	144	779	396	902	342	1640	105	690	1140	1935
% App. Total	11.3	82.7	6		40.9	40.6	18.5		24.1	55	20.9		5.4	35.7	58.9	
PHF	.941	.924	.809	.935	.848	.940	.947	.941	.884	.826	.950	.876	.750	.898	.911	.913

Counts Unlimited
PO Box 1178
Corona, CA 92878
(951) 268-6268

City of Culver City
N/S: Sepulveda Boulevard
E/W: Centinela Avenue
Weather: Clear

File Name : 07_CVC_Sepulveda_Centinela PM
Site Code : 16618886
Start Date : 11/28/2018

Groups Printed- Passenger Vehicles

	Sepulveda Boulevard Southbound				Centinela Avenue Westbound				Sepulveda Boulevard Northbound				Centinela Avenue Eastbound				
Start Time	Left	Thru	Right	App. Total	Left	Thru	Right	App. Total	Left	Thru	Right	App. Total	Left	Thru	Right	App. Total	Int. Total
03:00 PM	38	303	29	370	82	60	24	166	89	176	66	331	27	143	159	329	1196
03:15 PM	44	282	14	340	75	74	34	183	88	173	76	337	25	134	208	367	1227
03:30 PM	45	353	25	423	68	73	37	178	82	188	64	334	26	152	203	381	1316
03:45 PM	55	323	26	404	93	76	33	202	80	164	58	302	19	154	232	405	1313
Total	182	1261	94	1537	318	283	128	729	339	701	264	1304	97	583	802	1482	5052
04:00 PM	42	336	35	413	78	82	34	194	89	174	78	341	25	188	315	528	1476
04:15 PM	52	392	31	475	71	70	21	162	81	160	55	296	32	157	238	427	1360
04:30 PM	47	352	17	416	87	82	26	195	106	205	71	382	23	190	309	522	1515
04:45 PM	51	404	25	480	69	62	31	162	95	184	107	386	15	158	246	419	1447
Total	192	1484	108	1784	305	296	112	713	371	723	311	1405	95	693	1108	1896	5798
05:00 PM	54	341	29	424	104	89	30	223	98	207	83	388	34	180	274	488	1523
05:15 PM	55	342	16	413	86	65	18	169	109	271	86	466	30	155	301	486	1534
05:30 PM	36	394	23	453	93	58	18	169	76	174	90	340	44	154	246	444	1406
05:45 PM	43	372	30	445	80	61	27	168	111	240	82	433	10	172	282	464	1510
Total	188	1449	98	1735	363	273	93	729	394	892	341	1627	118	661	1103	1882	5973
Grand Total	562	4194	300	5056	986	852	333	2171	1104	2316	916	4336	310	1937	3013	5260	16823
Apprch %	11.1	83	5.9		45.4	39.2	15.3		25.5	53.4	21.1		5.9	36.8	57.3		
Total %	3.3	24.9	1.8	30.1	5.9	5.1	2	12.9	6.6	13.8	5.4	25.8	1.8	11.5	17.9	31.3	

	Sepulveda Boulevard Southbound				Centinela Avenue Westbound				Sepulveda Boulevard Northbound				Centinela Avenue Eastbound				
Start Time	Left	Thru	Right	App. Total	Left	Thru	Right	App. Total	Left	Thru	Right	App. Total	Left	Thru	Right	App. Total	Int. Total
Peak Hour Analysis From 04:30 PM to 05:15 PM - Peak 1 of 1																	
Peak Hour for Entire Intersection Begins at 04:30 PM																	
04:30 PM	47	352	17	416	87	82	26	195	106	205	71	382	23	**190**	**309**	**522**	1515
04:45 PM	51	**404**	25	**480**	69	62	**31**	162	95	184	**107**	386	15	158	246	419	1447
05:00 PM	54	341	**29**	424	**104**	**89**	30	**223**	98	207	83	388	**34**	180	274	488	1523
05:15 PM	**55**	342	16	413	86	65	18	169	**109**	**271**	86	**466**	30	155	301	486	**1534**
Total Volume	207	1439	87	1733	346	298	105	749	408	867	347	1622	102	683	1130	1915	6019
% App. Total	11.9	83	5		46.2	39.8	14		25.2	53.5	21.4		5.3	35.7	59		
PHF	.941	.890	.750	.903	.832	.837	.847	.840	.936	.800	.811	.870	.750	.899	.914	.917	.981

Counts Unlimited
PO Box 1178
Corona, CA 92878
(951) 268-6268

City of Culver City
N/S: Sepulveda Boulevard
E/W: Centinela Avenue
Weather: Clear

File Name : 07_CVC_Sepulveda_Centinela PM
Site Code : 16618886
Start Date : 11/28/2018
Page No : 2

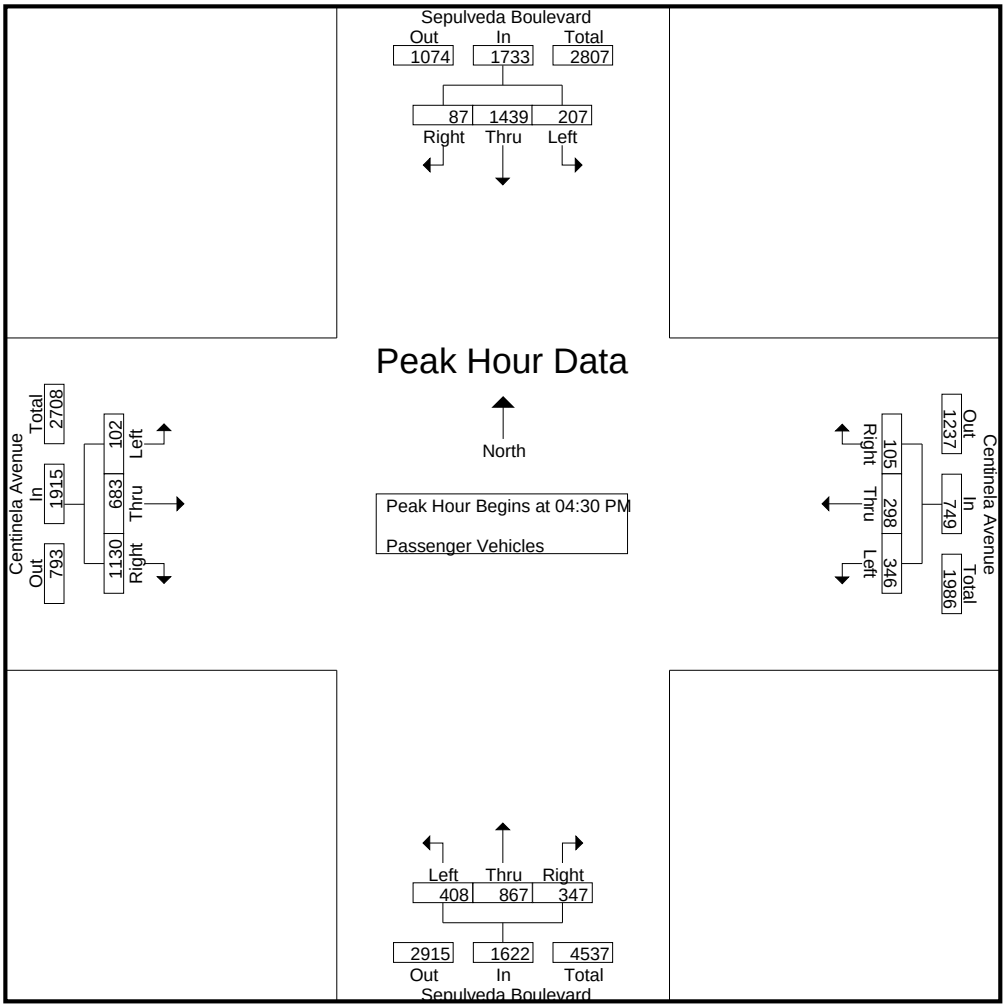

Peak Hour Analysis From 04:30 PM to 05:15 PM - Peak 1 of 1
Peak Hour for Each Approach Begins at:

	04:30 PM				04:30 PM				04:30 PM				04:30 PM			
+0 mins.	47	352	17	416	87	82	26	195	106	205	71	382	23	**190**	**309**	**522**
+15 mins.	51	**404**	25	**480**	69	62	**31**	162	95	184	**107**	386	15	158	246	419
+30 mins.	54	341	**29**	424	**104**	**89**	30	**223**	98	207	83	388	**34**	180	274	488
+45 mins.	**55**	342	16	413	86	65	18	169	**109**	**271**	86	**466**	30	155	301	486
Total Volume	207	1439	87	1733	346	298	105	749	408	867	347	1622	102	683	1130	1915
% App. Total	11.9	83	5		46.2	39.8	14		25.2	53.5	21.4		5.3	35.7	59	
PHF	.941	.890	.750	.903	.832	.837	.847	.840	.936	.800	.811	.870	.750	.899	.914	.917

Counts Unlimited
PO Box 1178
Corona, CA 92878
(951) 268-6268

City of Culver City
N/S: Sepulveda Boulevard
E/W: Centinela Avenue
Weather: Clear

File Name : 07_CVC_Sepulveda_Centinela PM
Site Code : 16618886
Start Date : 11/28/2018
Page No : 1

Groups Printed- Dual Wheeled

	Sepulveda Boulevard Southbound				Centinela Avenue Westbound				Sepulveda Boulevard Northbound				Centinela Avenue Eastbound				
Start Time	Left	Thru	Right	App. Total	Left	Thru	Right	App. Total	Left	Thru	Right	App. Total	Left	Thru	Right	App. Total	Int. Total
03:00 PM	0	3	1	4	1	1	0	2	1	2	0	3	0	2	3	5	14
03:15 PM	1	4	0	5	1	5	2	8	2	2	0	4	0	2	1	3	20
03:30 PM	1	3	0	4	2	0	1	3	0	2	0	2	2	3	5	10	19
03:45 PM	1	4	0	5	1	2	0	3	1	1	0	2	0	4	2	6	16
Total	3	14	1	18	5	8	3	16	4	7	0	11	2	11	11	24	69
04:00 PM	0	1	0	1	0	2	1	3	1	1	0	2	0	0	4	4	10
04:15 PM	1	5	0	6	1	2	1	4	0	2	0	2	0	5	6	11	23
04:30 PM	0	1	0	1	1	2	0	3	2	0	0	2	1	2	3	6	12
04:45 PM	1	3	2	6	0	0	0	0	0	0	2	2	0	1	2	3	11
Total	2	10	2	14	2	6	2	10	3	3	2	8	1	8	15	24	56
05:00 PM	1	3	0	4	0	0	0	0	0	1	0	1	0	2	2	4	9
05:15 PM	0	4	1	5	2	0	0	2	0	0	0	0	0	1	2	3	10
05:30 PM	0	5	1	6	0	0	0	0	1	0	0	1	1	0	2	3	10
05:45 PM	0	0	0	0	0	0	0	0	1	1	1	3	0	0	1	1	4
Total	1	12	2	15	2	0	0	2	2	2	1	5	1	3	7	11	33
Grand Total	6	36	5	47	9	14	5	28	9	12	3	24	4	22	33	59	158
Apprch %	12.8	76.6	10.6		32.1	50	17.9		37.5	50	12.5		6.8	37.3	55.9		
Total %	3.8	22.8	3.2	29.7	5.7	8.9	3.2	17.7	5.7	7.6	1.9	15.2	2.5	13.9	20.9	37.3	

	Sepulveda Boulevard Southbound				Centinela Avenue Westbound				Sepulveda Boulevard Northbound				Centinela Avenue Eastbound				
Start Time	Left	Thru	Right	App. Total	Left	Thru	Right	App. Total	Left	Thru	Right	App. Total	Left	Thru	Right	App. Total	Int. Total
Peak Hour Analysis From 04:30 PM to 05:15 PM - Peak 1 of 1																	
Peak Hour for Entire Intersection Begins at 04:30 PM																	
04:30 PM	0	1	0	1	1	**2**	0	**3**	**2**	0	0	**2**	**1**	**2**	**3**	**6**	**12**
04:45 PM	**1**	3	**2**	**6**	0	0	0	0	0	0	**2**	2	0	1	2	3	11
05:00 PM	1	3	0	4	0	0	0	0	0	**1**	0	1	0	2	2	4	9
05:15 PM	0	**4**	1	5	**2**	0	0	2	0	0	0	0	0	1	2	3	10
Total Volume	2	11	3	16	3	2	0	5	2	1	2	5	1	6	9	16	42
% App. Total	12.5	68.8	18.8		60	40	0		40	20	40		6.2	37.5	56.2		
PHF	.500	.688	.375	.667	.375	.250	.000	.417	.250	.250	.250	.625	.250	.750	.750	.667	.875

Counts Unlimited
PO Box 1178
Corona, CA 92878
(951) 268-6268

City of Culver City
N/S: Sepulveda Boulevard
E/W: Centinela Avenue
Weather: Clear

File Name : 07_CVC_Sepulveda_Centinela PM
Site Code : 16618886
Start Date : 11/28/2018
Page No : 2

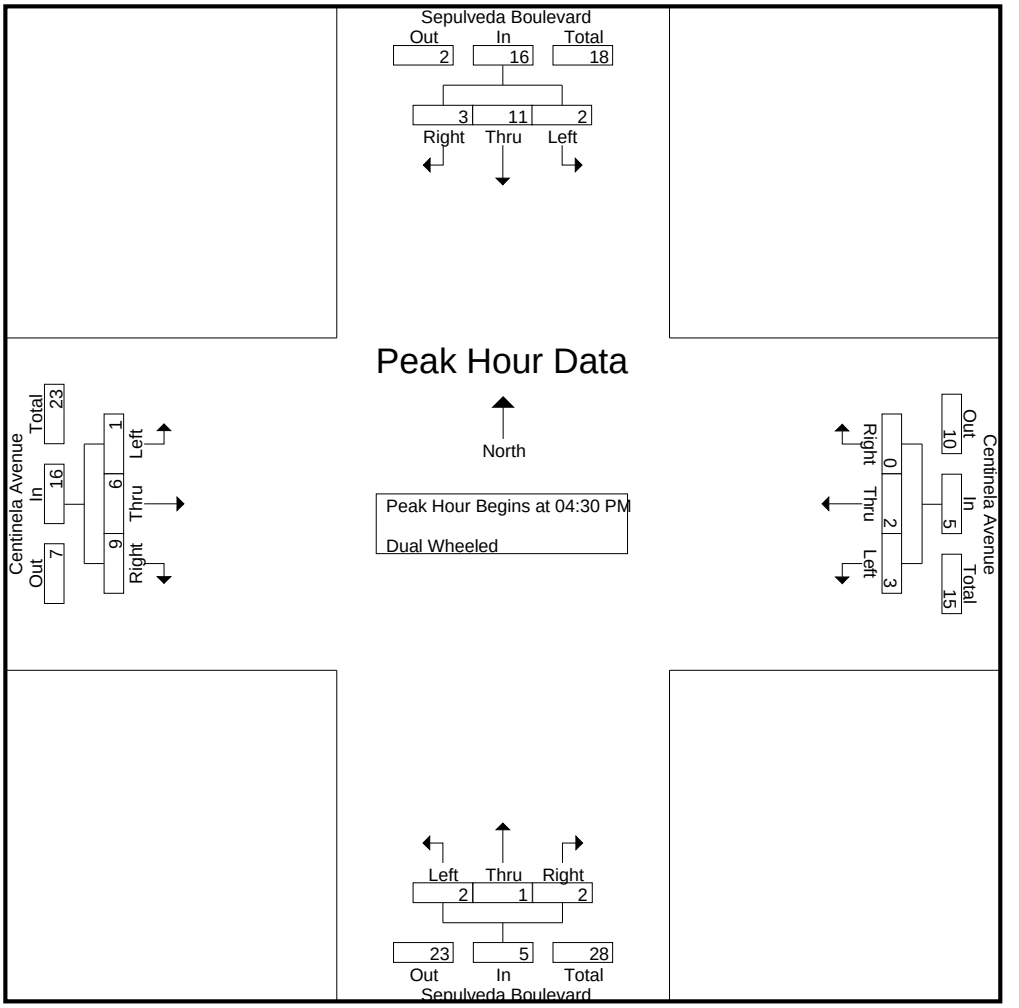

Peak Hour Analysis From 04:30 PM to 05:15 PM - Peak 1 of 1
Peak Hour for Each Approach Begins at:

	04:30 PM				04:30 PM				04:30 PM				04:30 PM			
+0 mins.	0	1	0	1	1	**2**	0	**3**	**2**	0	0	**2**	**1**	**2**	**3**	**6**
+15 mins.	**1**	3	**2**	**6**	0	0	0	0	0	0	**2**	2	0	1	2	3
+30 mins.	1	3	0	4	0	0	0	0	0	**1**	0	1	0	2	2	4
+45 mins.	0	**4**	1	5	**2**	0	0	2	0	0	0	0	0	1	2	3
Total Volume	2	11	3	16	3	2	0	5	2	1	2	5	1	6	9	16
% App. Total	12.5	68.8	18.8		60	40	0		40	20	40		6.2	37.5	56.2	
PHF	.500	.688	.375	.667	.375	.250	.000	.417	.250	.250	.250	.625	.250	.750	.750	.667

Counts Unlimited
PO Box 1178
Corona, CA 92878
(951) 268-6268

City of Culver City
N/S: Sepulveda Boulevard
E/W: Centinela Avenue
Weather: Clear

File Name : 07_CVC_Sepulveda_Centinela PM
Site Code : 16618886
Start Date : 11/28/2018
Page No : 1

Groups Printed- Buses

	Sepulveda Boulevard Southbound				Centinela Avenue Westbound				Sepulveda Boulevard Northbound				Centinela Avenue Eastbound				
Start Time	Left	Thru	Right	App. Total	Left	Thru	Right	App. Total	Left	Thru	Right	App. Total	Left	Thru	Right	App. Total	Int. Total
03:00 PM	0	3	2	5	0	0	1	1	2	2	0	4	1	0	0	1	11
03:15 PM	1	2	2	5	0	0	1	1	0	4	1	5	1	1	2	4	15
03:30 PM	0	2	1	3	1	0	0	1	0	2	3	5	0	0	1	1	10
03:45 PM	1	4	0	5	0	2	0	2	0	2	0	2	1	1	2	4	13
Total	2	11	5	18	1	2	2	5	2	10	4	16	3	2	5	10	49
04:00 PM	0	4	1	5	0	0	1	1	0	2	0	2	0	1	3	4	12
04:15 PM	0	6	3	9	0	0	0	0	0	3	0	3	1	0	0	1	13
04:30 PM	0	2	2	4	0	0	0	0	0	4	0	4	1	0	1	2	10
04:45 PM	0	3	0	3	0	1	0	1	1	2	0	3	0	0	0	0	7
Total	0	15	6	21	0	1	1	2	1	11	0	12	2	1	4	7	42
05:00 PM	0	3	1	4	0	0	1	1	0	2	0	2	1	1	0	2	9
05:15 PM	0	1	1	2	0	1	0	1	0	2	0	2	0	0	0	0	5
05:30 PM	0	3	1	4	0	1	0	1	0	0	0	0	1	0	0	1	6
05:45 PM	0	3	1	4	1	0	0	1	0	4	0	4	0	0	0	0	9
Total	0	10	4	14	1	2	1	4	0	8	0	8	2	1	0	3	29
Grand Total	2	36	15	53	2	5	4	11	3	29	4	36	7	4	9	20	120
Apprch %	3.8	67.9	28.3		18.2	45.5	36.4		8.3	80.6	11.1		35	20	45		
Total %	1.7	30	12.5	44.2	1.7	4.2	3.3	9.2	2.5	24.2	3.3	30	5.8	3.3	7.5	16.7	

	Sepulveda Boulevard Southbound				Centinela Avenue Westbound				Sepulveda Boulevard Northbound				Centinela Avenue Eastbound				
Start Time	Left	Thru	Right	App. Total	Left	Thru	Right	App. Total	Left	Thru	Right	App. Total	Left	Thru	Right	App. Total	Int. Total
Peak Hour Analysis From 04:30 PM to 05:15 PM - Peak 1 of 1																	
Peak Hour for Entire Intersection Begins at 04:30 PM																	
04:30 PM	0	2	**2**	**4**	0	0	0	0	0	**4**	0	**4**	**1**	0	**1**	**2**	**10**
04:45 PM	0	**3**	0	3	0	**1**	0	**1**	**1**	2	0	3	0	0	0	0	7
05:00 PM	0	3	1	4	0	0	**1**	1	0	2	0	2	1	**1**	0	2	9
05:15 PM	0	1	1	2	0	1	0	1	0	2	0	2	0	0	0	0	5
Total Volume	0	9	4	13	0	2	1	3	1	10	0	11	2	1	1	4	31
% App. Total	0	69.2	30.8		0	66.7	33.3		9.1	90.9	0		50	25	25		
PHF	.000	.750	.500	.813	.000	.500	.250	.750	.250	.625	.000	.688	.500	.250	.250	.500	.775

Counts Unlimited
PO Box 1178
Corona, CA 92878
(951) 268-6268

City of Culver City
N/S: Sepulveda Boulevard
E/W: Centinela Avenue
Weather: Clear

File Name : 07_CVC_Sepulveda_Centinela PM
Site Code : 16618886
Start Date : 11/28/2018
Page No : 2

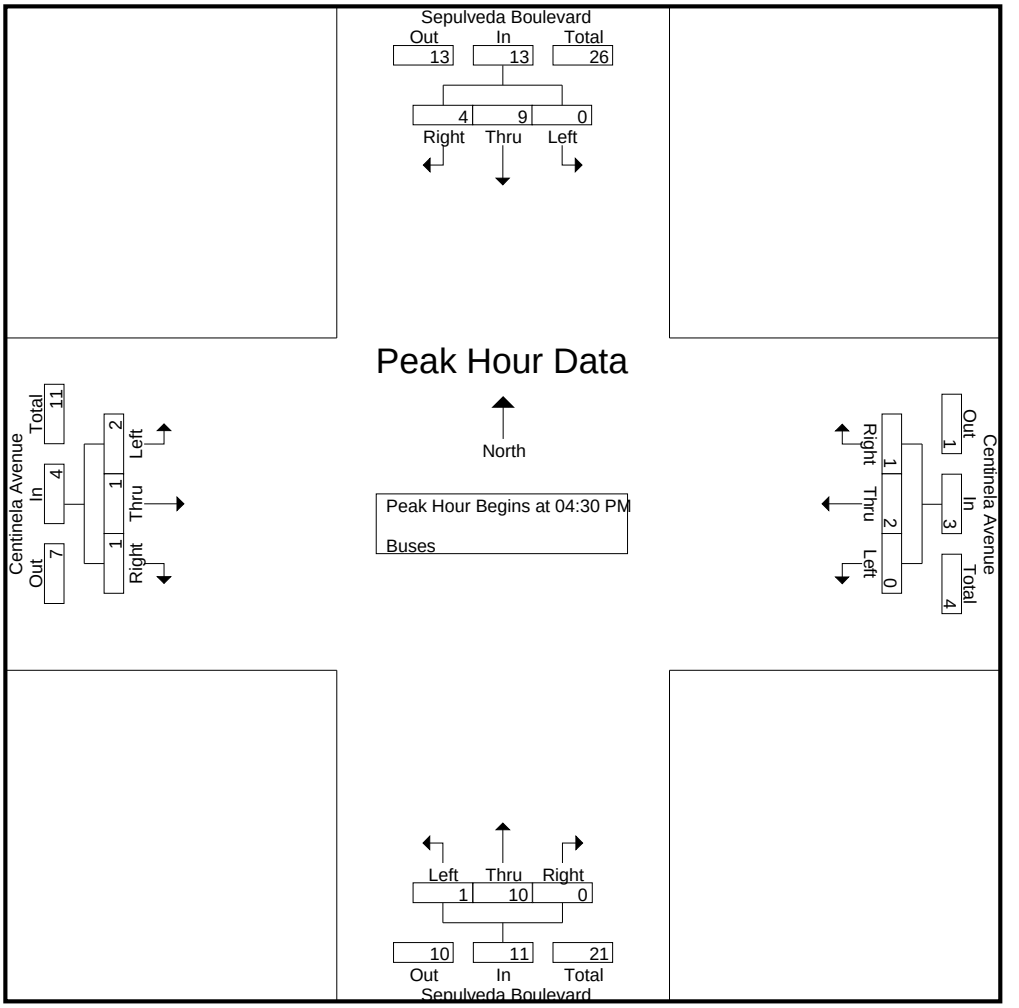

Peak Hour Analysis From 04:30 PM to 05:15 PM - Peak 1 of 1
Peak Hour for Each Approach Begins at:

	04:30 PM				04:30 PM				04:30 PM				04:30 PM			
+0 mins.	0	2	**2**	**4**	0	0	0	0	0	**4**	0	**4**	**1**	0	**1**	**2**
+15 mins.	0	**3**	0	3	0	**1**	0	**1**	**1**	2	0	3	0	0	0	0
+30 mins.	0	3	1	4	0	0	**1**	1	0	2	0	2	1	**1**	0	2
+45 mins.	0	1	1	2	0	1	0	1	0	2	0	2	0	0	0	0
Total Volume	0	9	4	13	0	2	1	3	1	10	0	11	2	1	1	4
% App. Total	0	69.2	30.8		0	66.7	33.3		9.1	90.9	0		50	25	25	
PHF	.000	.750	.500	.813	.000	.500	.250	.750	.250	.625	.000	.688	.500	.250	.250	.500

City Of Los Angeles
Department Of Transportation
MANUAL TRAFFIC COUNT SUMMARY

STREET:

North/South Sepulveda Boulevard

East/West Centinela Avenue

Day: Wednesday **Date:** November 25, 2018 **Weather:** CLEAR

Hours: 7-10AM 3-6PM **Staff:** CUI

School Day: YES **District:** Culver City I/S CODE 0

	N/B	S/B	E/B	W/B
DUAL-WHEELED	125	105	119	82
BIKES	17	18	24	19
BUSES	82	97	37	27

	N/B	TIME	S/B	TIME	E/B	TIME	W/B	TIME
AM PK 15 MIN	692	7.15	292	8.45	255	8.00	348	7.45
PM PK 15 MIN	468	5.15	490	4.15	536	4.00	224	5.00
AM PK HOUR	2591	7.15	1060	8.30	910	8.00	1125	7.30
PM PK HOUR	1640	5.00	1832	4.15	1935	4.30	779	3.15

NORTHBOUND Approach

Hours	Lt	Th	Rt	Total
7-8	972	1344	187	2503
8-9	1014	1182	313	2509
9-10	810	1271	222	2303
3-4	345	718	268	1331
4-5	375	737	313	1425
5-6	396	902	342	1640
TOTAL	3912	6154	1645	11711

SOUTHBOUND Approach

Hours	Lt	Th	Rt	Total
7-8	27	553	171	751
8-9	73	735	220	1028
9-10	64	620	244	928
3-4	187	1286	100	1573
4-5	194	1509	116	1819
5-6	189	1471	104	1764
TOTAL	734	6174	955	7863

TOTAL	**XING S/L**		**XING N/L**	
N-S	Ped	Sch	Ped	Sch
3254	0	0	8	0
3537	0	0	18	0
3231	0	0	14	0
2904	1	0	8	0
3244	2	0	14	0
3404	0	0	3	0
19574	3	0	65	0

EASTBOUND Approach

Hours	Lt	Th	Rt	Total
7-8	44	214	304	562
8-9	100	297	513	910
9-10	82	235	338	655
3-4	102	596	818	1516
4-5	98	702	1127	1927
5-6	121	665	1110	1896
TOTAL	547	2709	4210	7466

WESTBOUND Approach

Hours	Lt	Th	Rt	Total
7-8	194	813	88	1095
8-9	228	709	64	1001
9-10	206	700	101	1007
3-4	324	293	133	750
4-5	307	303	115	725
5-6	366	275	94	735
TOTAL	1625	3093	595	5313

TOTAL	**XING W/L**		**XING E/L**	
E-W	Ped	Sch	Ped	Sch
1657	16	0	3	1
1911	9	0	13	0
1662	7	0	8	0
2266	15	0	8	0
2652	18	0	12	0
2631	10	0	12	0
12779	75	0	56	1

(Rev Oct 06)

City of Los Angeles
Department of Transportation

BICYCLE COUNT SUMMARY

STREET:

North/South:	Sepulveda Boulevard				
East/West:	Centinela Avenue				
Day:	Wednesday	Date:	11/25/2018	Weather:	CLEAR
School Day:	Yes	District:	Culver City	I/S Code:	0
Hours:	7-10 AM, 3-6 PM	Staff:	CUI		

NORTHBOUND Approach

Hours	Lt	Th	Rt	Total
7-8	0	6	0	6
8-9	0	2	0	2
9-10	0	5	0	5
3-4	0	1	0	1
4-5	2	0	1	3
5-6	0	0	0	0
TOTAL	2	14	1	17

SOUTHBOUND Approach

Hours	Lt	Th	Rt	Total
7-8	0	0	1	1
8-9	0	2	4	6
9-10	0	1	2	3
3-4	0	0	2	2
4-5	0	2	1	3
5-6	0	2	1	3
TOTAL	0	7	11	18

TOTAL

Hours	N-S
7-8	7
8-9	8
9-10	8
3-4	3
4-5	6
5-6	3
TOTAL	35

EASTBOUND Approach

Hours	Lt	Th	Rt	Total
7-8	2	1	0	3
8-9	1	2	1	4
9-10	0	2	0	2
3-4	0	3	0	3
4-5	6	3	0	9
5-6	0	3	0	3
TOTAL	9	14	1	24

WESTBOUND Approach

Hours	Lt	Th	Rt	Total
7-8	0	3	0	3
8-9	0	3	2	5
9-10	0	1	0	1
3-4	0	4	1	5
4-5	1	2	0	3
5-6	0	2	0	2
TOTAL	1	15	3	19

TOTAL

Hours	E-W
7-8	6
8-9	9
9-10	3
3-4	8
4-5	12
5-6	5
TOTAL	43

REMARKS (6 hour total):

	NB	SB	EB	WB	TOTAL
- Female Riders	1	0	3	0	4
- No helmet riders	12	13	12	21	58
- Sidewalk Riding	16	6	14	14	50
- Wrong way riding	3	4	4	3	14

NB: Northbound, **SB**: Southbound, **EB**: Eastbound, **WB**: Westbound, **I/S**: Intersection

Source: CUI

LADOT 2015 CMP

City of Los Angeles
Department of Transportation

PEDESTRIAN COUNT SUMMARY

STREET:					
North/South:	Sepulveda Boulevard				
East/West:	Centinela Avenue				
Day:	Wednesday	Date:	################	Weather:	CLEAR
School Day:	YES	District:	Culver City	I/S Code:	0
Hours:	7-10 AM, 3-6 PM	Staff:	CUI		

AM PEAK PERIOD

15 Min. Interval	N-LEG	S-LEG	E-LEG	W-LEG	TOTAL
7:00-7:15	2	0	0	3	5
7:15-7:30	1	0	1	2	4
7:30-7:45	2	0	1	5	8
7:45-8:00	3	0	2	6	11
8:00-8:15	0	0	3	5	8
8:15-8:30	4	0	3	0	7
8:30-8:45	1	0	1	1	3
8:45-9:00	13	0	6	3	22
9:00-9:15	2	0	2	2	6
9:15-9:30	5	0	0	2	7
9:30-9:45	3	0	1	3	7
9:45-10:00	4	0	5	0	9
Hours					
7 - 8	8	0	4	16	28
8 - 9	18	0	13	9	40
9 - 10	14	0	8	7	29
TOTAL	40	0	25	32	97

PM PEAK PERIOD

15 Min. Interval	N-LEG	S-LEG	E-LEG	W-LEG	TOTAL
3:00-3:15	1	0	4	2	7
3:15-3:30	2	2	4	14	22
3:30-3:45	1	0	2	8	11
3:45-4:00	4	0	6	6	16
4:00-4:15	6	4	10	8	28
4:15-4:30	3	0	6	20	29
4:30-4:45	5	0	6	8	19
4:45-5:00	0	0	2	0	2
5:00-5:15	2	0	2	4	8
5:15-5:30	1	0	10	10	21
5:30-5:45	0	0	0	4	4
5:45-6:00	0	0	12	2	14
Hours					
3 - 4	8	2	16	30	56
4 - 5	14	4	24	36	78
5 - 6	3	0	24	20	47
	25	6	64	86	181

REMARKS (6 hour total):

	N-LEG	S-LEG	E-LEG	W-LEG	TOTAL
- Wheelchair/special needs assistance	0	0	0	0	0
- Skateboard/scooter	4	2	3	3	12

N: North, **S**: South, **E**: East, **W**: West, **I/S**: Intersection

Source: LADOT 2015 CMP

Counts Unlimited
PO Box 1178
Corona, CA 92878
(951) 268-6268

City of Culver City
N/S: Alley
E/W: Slauson Avenue
Weather: Clear

File Name : CVC_Alley_Slauson_AM
Site Code : 16619271
Start Date : 4/25/2019
Page No : 1

Groups Printed- Passenger Vehicles - Dual Wheeled Trucks - Buses

	Alley Southbound			Slauson Avenue Westbound			Slauson Avenue Eastbound			
Start Time	Left	Right	App. Total	Thru	Right	App. Total	Left	Thru	App. Total	Int. Total
07:00 AM	3	2	5	54	6	60	1	22	23	88
07:15 AM	5	2	7	50	14	64	4	34	38	109
07:30 AM	4	2	6	63	16	79	1	25	26	111
07:45 AM	2	0	2	81	15	96	1	42	43	141
Total	14	6	20	248	51	299	7	123	130	449
08:00 AM	3	0	3	85	13	98	2	43	45	146
08:15 AM	2	0	2	106	0	106	0	31	31	139
08:30 AM	3	1	4	112	9	121	1	62	63	188
08:45 AM	4	1	5	45	13	58	2	79	81	144
Total	12	2	14	348	35	383	5	215	220	617
09:00 AM	5	0	5	45	5	50	0	32	32	87
09:15 AM	6	3	9	39	8	47	1	20	21	77
09:30 AM	2	1	3	34	8	42	0	20	20	65
09:45 AM	4	0	4	36	3	39	3	31	34	77
Total	17	4	21	154	24	178	4	103	107	306
Grand Total	43	12	55	750	110	860	16	441	457	1372
Apprch %	78.2	21.8		87.2	12.8		3.5	96.5		
Total %	3.1	0.9	4	54.7	8	62.7	1.2	32.1	33.3	
Passenger Vehicles	38	11	49	741	107	848	15	431	446	1343
% Passenger Vehicles	88.4	91.7	89.1	98.8	97.3	98.6	93.8	97.7	97.6	97.9
Dual Wheeled Trucks	5	1	6	9	3	12	1	10	11	29
% Dual Wheeled Trucks										
Buses	0	0	0	0	0	0	0	0	0	0
% Buses	0	0	0	0	0	0	0	0	0	0

	Alley Southbound			Slauson Avenue Westbound			Slauson Avenue Eastbound			
Start Time	Left	Right	App. Total	Thru	Right	App. Total	Left	Thru	App. Total	Int. Total
Peak Hour Analysis From 07:00 AM to 09:45 AM - Peak 1 of 1										
Peak Hour for Entire Intersection Begins at 08:00 AM										
08:00 AM	3	0	3	85	**13**	98	**2**	43	45	146
08:15 AM	2	0	2	106	0	106	0	31	31	139
08:30 AM	3	**1**	4	**112**	9	**121**	1	62	63	**188**
08:45 AM	**4**	1	**5**	45	13	58	2	**79**	**81**	144
Total Volume	12	2	14	348	35	383	5	215	220	617
% App. Total	85.7	14.3		90.9	9.1		2.3	97.7		
PHF	.750	.500	.700	.777	.673	.791	.625	.680	.679	.820

Counts Unlimited
PO Box 1178
Corona, CA 92878
(951) 268-6268

City of Culver City
N/S: Alley
E/W: Slauson Avenue
Weather: Clear

File Name : CVC_Alley_Slauson_AM
Site Code : 16619271
Start Date : 4/25/2019
Page No : 2

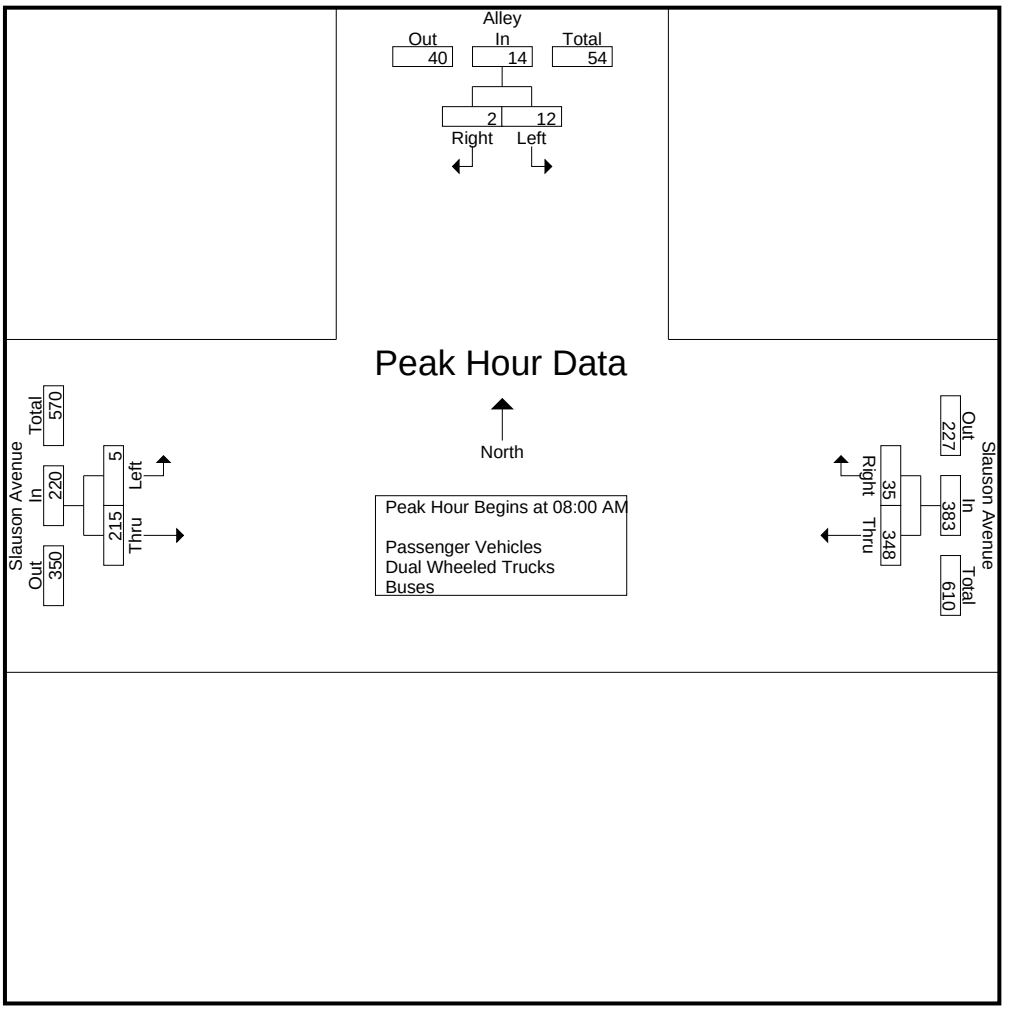

Peak Hour Analysis From 07:00 AM to 09:45 AM - Peak 1 of 1
Peak Hour for Each Approach Begins at:

	08:30 AM			07:45 AM			08:00 AM		
+0 mins.	3	1	4	81	**15**	96	**2**	43	45
+15 mins.	4	1	5	85	13	98	0	31	31
+30 mins.	5	0	5	106	0	106	1	62	63
+45 mins.	**6**	**3**	**9**	**112**	9	**121**	2	**79**	**81**
Total Volume	18	5	23	384	37	421	5	215	220
% App. Total	78.3	21.7		91.2	8.8		2.3	97.7	
PHF	.750	.417	.639	.857	.617	.870	.625	.680	.679

Counts Unlimited
PO Box 1178
Corona, CA 92878
(951) 268-6268

City of Culver City
N/S: Alley
E/W: Slauson Avenue
Weather: Clear

File Name : CVC_Alley_Slauson_AM
Site Code : 16619271
Start Date : 4/25/2019
Page No : 1

Groups Printed- Passenger Vehicles

	Alley Southbound			Slauson Avenue Westbound			Slauson Avenue Eastbound			
Start Time	Left	Right	App. Total	Thru	Right	App. Total	Left	Thru	App. Total	Int. Total
07:00 AM	3	2	5	54	6	60	1	22	23	88
07:15 AM	4	1	5	50	13	63	3	34	37	105
07:30 AM	4	2	6	63	16	79	1	24	25	110
07:45 AM	1	0	1	80	15	95	1	40	41	137
Total	12	5	17	247	50	297	6	120	126	440
08:00 AM	3	0	3	85	13	98	2	43	45	146
08:15 AM	2	0	2	106	0	106	0	31	31	139
08:30 AM	3	1	4	112	7	119	1	62	63	186
08:45 AM	4	1	5	45	13	58	2	78	80	143
Total	12	2	14	348	33	381	5	214	219	614
09:00 AM	4	0	4	43	5	48	0	29	29	81
09:15 AM	5	3	8	37	8	45	1	20	21	74
09:30 AM	1	1	2	31	8	39	0	20	20	61
09:45 AM	4	0	4	35	3	38	3	28	31	73
Total	14	4	18	146	24	170	4	97	101	289
Grand Total	38	11	49	741	107	848	15	431	446	1343
Apprch %	77.6	22.4		87.4	12.6		3.4	96.6		
Total %	2.8	0.8	3.6	55.2	8	63.1	1.1	32.1	33.2	

	Alley Southbound			Slauson Avenue Westbound			Slauson Avenue Eastbound			
Start Time	Left	Right	App. Total	Thru	Right	App. Total	Left	Thru	App. Total	Int. Total
Peak Hour Analysis From 08:00 AM to 08:45 AM - Peak 1 of 1										
Peak Hour for Entire Intersection Begins at 08:00 AM										
08:00 AM	3	0	3	85	**13**	98	**2**	43	45	146
08:15 AM	2	0	2	106	0	106	0	31	31	139
08:30 AM	3	**1**	4	**112**	7	**119**	1	62	63	**186**
08:45 AM	**4**	1	**5**	45	13	58	2	**78**	**80**	143
Total Volume	12	2	14	348	33	381	5	214	219	614
% App. Total	85.7	14.3		91.3	8.7		2.3	97.7		
PHF	.750	.500	.700	.777	.635	.800	.625	.686	.684	.825

Counts Unlimited
PO Box 1178
Corona, CA 92878
(951) 268-6268

City of Culver City
N/S: Alley
E/W: Slauson Avenue
Weather: Clear

File Name : CVC_Alley_Slauson_AM
Site Code : 16619271
Start Date : 4/25/2019
Page No : 2

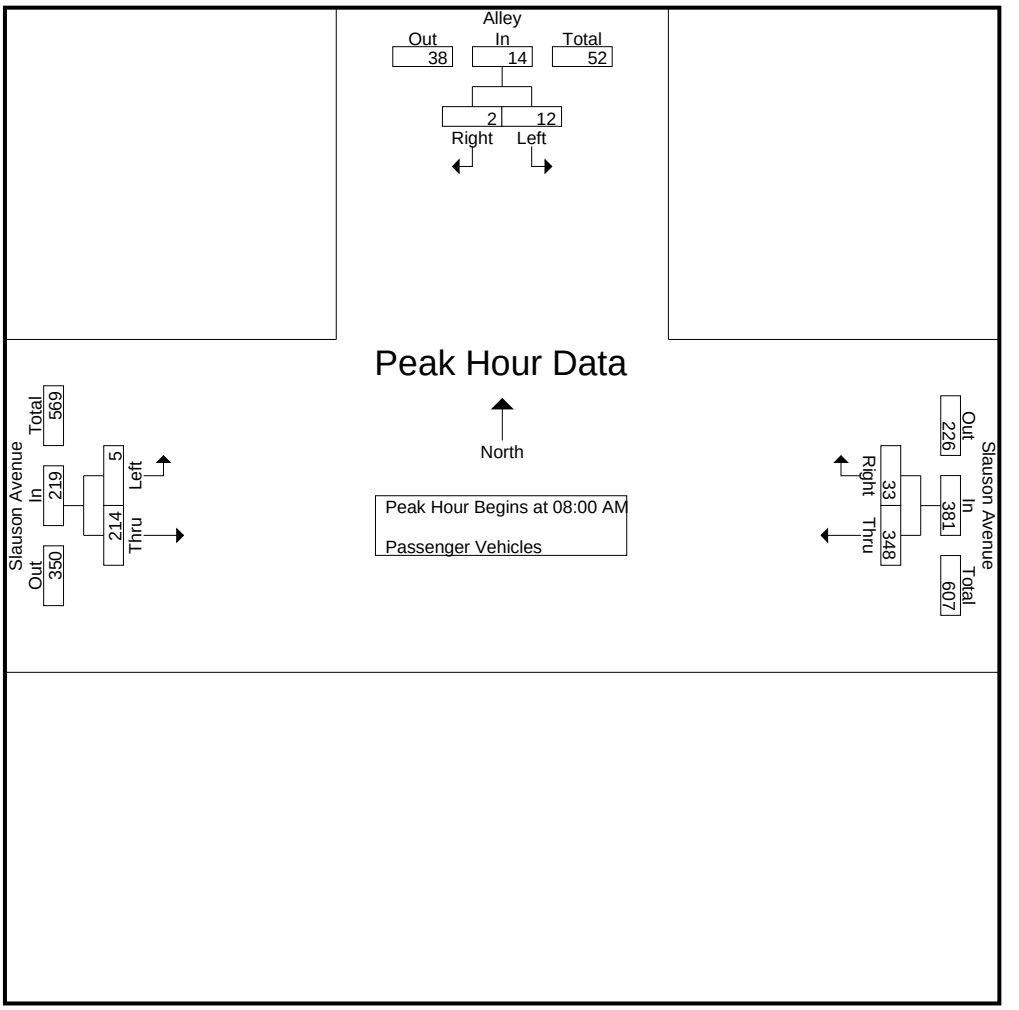

Peak Hour Analysis From 08:00 AM to 08:45 AM - Peak 1 of 1
Peak Hour for Each Approach Begins at:

	08:00 AM			08:00 AM			08:00 AM		
+0 mins.	3	0	3	85	**13**	98	**2**	43	45
+15 mins.	2	0	2	106	0	106	0	31	31
+30 mins.	3	**1**	4	**112**	7	**119**	1	62	63
+45 mins.	**4**	1	**5**	45	13	58	2	**78**	**80**
Total Volume	12	2	14	348	33	381	5	214	219
% App. Total	85.7	14.3		91.3	8.7		2.3	97.7	
PHF	.750	.500	.700	.777	.635	.800	.625	.686	.684

Counts Unlimited
PO Box 1178
Corona, CA 92878
(951) 268-6268

City of Culver City
N/S: Alley
E/W: Slauson Avenue
Weather: Clear

File Name : CVC_Alley_Slauson_AM
Site Code : 16619271
Start Date : 4/25/2019
Page No : 1

Groups Printed- Dual Wheeled Trucks

	Alley Southbound			Slauson Avenue Westbound			Slauson Avenue Eastbound			
Start Time	Left	Right	App. Total	Thru	Right	App. Total	Left	Thru	App. Total	Int. Total
07:00 AM	0	0	0	0	0	0	0	0	0	0
07:15 AM	1	1	2	0	1	1	1	0	1	4
07:30 AM	0	0	0	0	0	0	0	1	1	1
07:45 AM	1	0	1	1	0	1	0	2	2	4
Total	2	1	3	1	1	2	1	3	4	9
08:00 AM	0	0	0	0	0	0	0	0	0	0
08:15 AM	0	0	0	0	0	0	0	0	0	0
08:30 AM	0	0	0	0	2	2	0	0	0	2
08:45 AM	0	0	0	0	0	0	0	1	1	1
Total	0	0	0	0	2	2	0	1	1	3
09:00 AM	1	0	1	2	0	2	0	3	3	6
09:15 AM	1	0	1	2	0	2	0	0	0	3
09:30 AM	1	0	1	3	0	3	0	0	0	4
09:45 AM	0	0	0	1	0	1	0	3	3	4
Total	3	0	3	8	0	8	0	6	6	17
Grand Total	5	1	6	9	3	12	1	10	11	29
Apprch %	83.3	16.7		75	25		9.1	90.9		
Total %	17.2	3.4	20.7	31	10.3	41.4	3.4	34.5	37.9	

	Alley Southbound			Slauson Avenue Westbound			Slauson Avenue Eastbound			
Start Time	Left	Right	App. Total	Thru	Right	App. Total	Left	Thru	App. Total	Int. Total
Peak Hour Analysis From 08:00 AM to 08:45 AM - Peak 1 of 1										
Peak Hour for Entire Intersection Begins at 08:00 AM										
08:00 AM	0	0	0	0	0	0	0	0	0	0
08:15 AM	0	0	0	0	0	0	0	0	0	0
08:30 AM	0	0	0	0	**2**	**2**	0	0	0	**2**
08:45 AM	0	0	0	0	0	0	0	**1**	**1**	1
Total Volume	0	0	0	0	2	2	0	1	1	3
% App. Total	0	0		0	100		0	100		
PHF	.000	.000	.000	.000	.250	.250	.000	.250	.250	.375

Counts Unlimited
PO Box 1178
Corona, CA 92878
(951) 268-6268

City of Culver City
N/S: Alley
E/W: Slauson Avenue
Weather: Clear

File Name : CVC_Alley_Slauson_AM
Site Code : 16619271
Start Date : 4/25/2019
Page No : 2

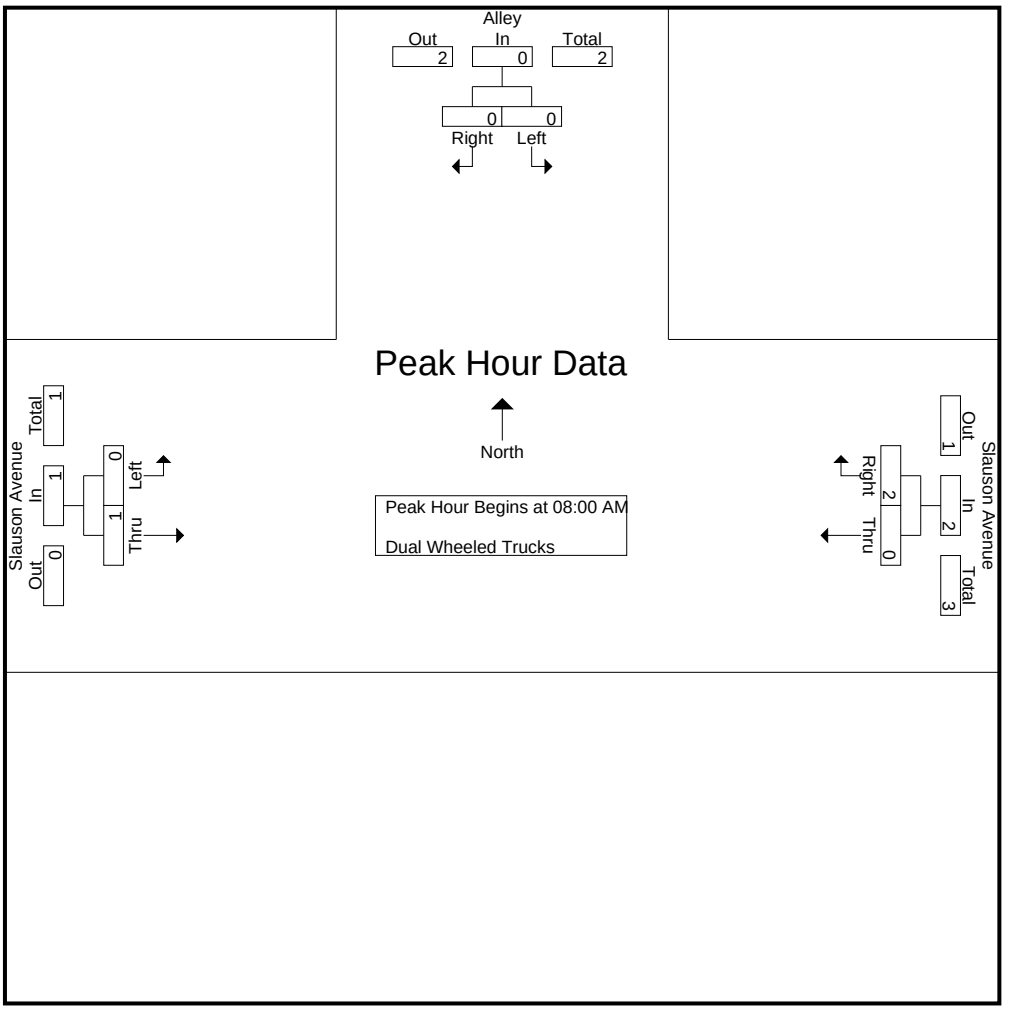

Peak Hour Analysis From 08:00 AM to 08:45 AM - Peak 1 of 1
Peak Hour for Each Approach Begins at:

	08:00 AM			08:00 AM			08:00 AM		
+0 mins.	0	0	0	0	0	0	0	0	0
+15 mins.	0	0	0	0	0	0	0	0	0
+30 mins.	0	0	0	0	**2**	**2**	0	0	0
+45 mins.	0	0	0	0	0	0	0	**1**	**1**
Total Volume	0	0	0	0	2	2	0	1	1
% App. Total	0	0		0	100		0	100	
PHF	.000	.000	.000	.000	.250	.250	.000	.250	.250

Counts Unlimited
PO Box 1178
Corona, CA 92878
(951) 268-6268

City of Culver City
N/S: Alley
E/W: Slauson Avenue
Weather: Clear

File Name : CVC_Alley_Slauson_AM
Site Code : 16619271
Start Date : 4/25/2019
Page No : 1

Groups Printed- Buses

	Alley Southbound			Slauson Avenue Westbound			Slauson Avenue Eastbound			
Start Time	Left	Right	App. Total	Thru	Right	App. Total	Left	Thru	App. Total	Int. Total
07:00 AM	0	0	0	0	0	0	0	0	0	0
07:15 AM	0	0	0	0	0	0	0	0	0	0
07:30 AM	0	0	0	0	0	0	0	0	0	0
07:45 AM	0	0	0	0	0	0	0	0	0	0
Total	0	0	0	0	0	0	0	0	0	0
08:00 AM	0	0	0	0	0	0	0	0	0	0
08:15 AM	0	0	0	0	0	0	0	0	0	0
08:30 AM	0	0	0	0	0	0	0	0	0	0
08:45 AM	0	0	0	0	0	0	0	0	0	0
Total	0	0	0	0	0	0	0	0	0	0
09:00 AM	0	0	0	0	0	0	0	0	0	0
09:15 AM	0	0	0	0	0	0	0	0	0	0
09:30 AM	0	0	0	0	0	0	0	0	0	0
09:45 AM	0	0	0	0	0	0	0	0	0	0
Total	0	0	0	0	0	0	0	0	0	0
Grand Total	0	0	0	0	0	0	0	0	0	0
Apprch %	0	0		0	0		0	0		
Total %										

	Alley Southbound			Slauson Avenue Westbound			Slauson Avenue Eastbound			
Start Time	Left	Right	App. Total	Thru	Right	App. Total	Left	Thru	App. Total	Int. Total
Peak Hour Analysis From 08:00 AM to 08:45 AM - Peak 1 of 1										
Peak Hour for Entire Intersection Begins at 08:00 AM										
08:00 AM	0	0	0	0	0	0	0	0	0	0
08:15 AM	0	0	0	0	0	0	0	0	0	0
08:30 AM	0	0	0	0	0	0	0	0	0	0
08:45 AM	0	0	0	0	0	0	0	0	0	0
Total Volume	0	0	0	0	0	0	0	0	0	0
% App. Total	0	0		0	0		0	0		
PHF	.000	.000	.000	.000	.000	.000	.000	.000	.000	.000

Counts Unlimited
PO Box 1178
Corona, CA 92878
(951) 268-6268

City of Culver City
N/S: Alley
E/W: Slauson Avenue
Weather: Clear

File Name : CVC_Alley_Slauson_AM
Site Code : 16619271
Start Date : 4/25/2019
Page No : 2

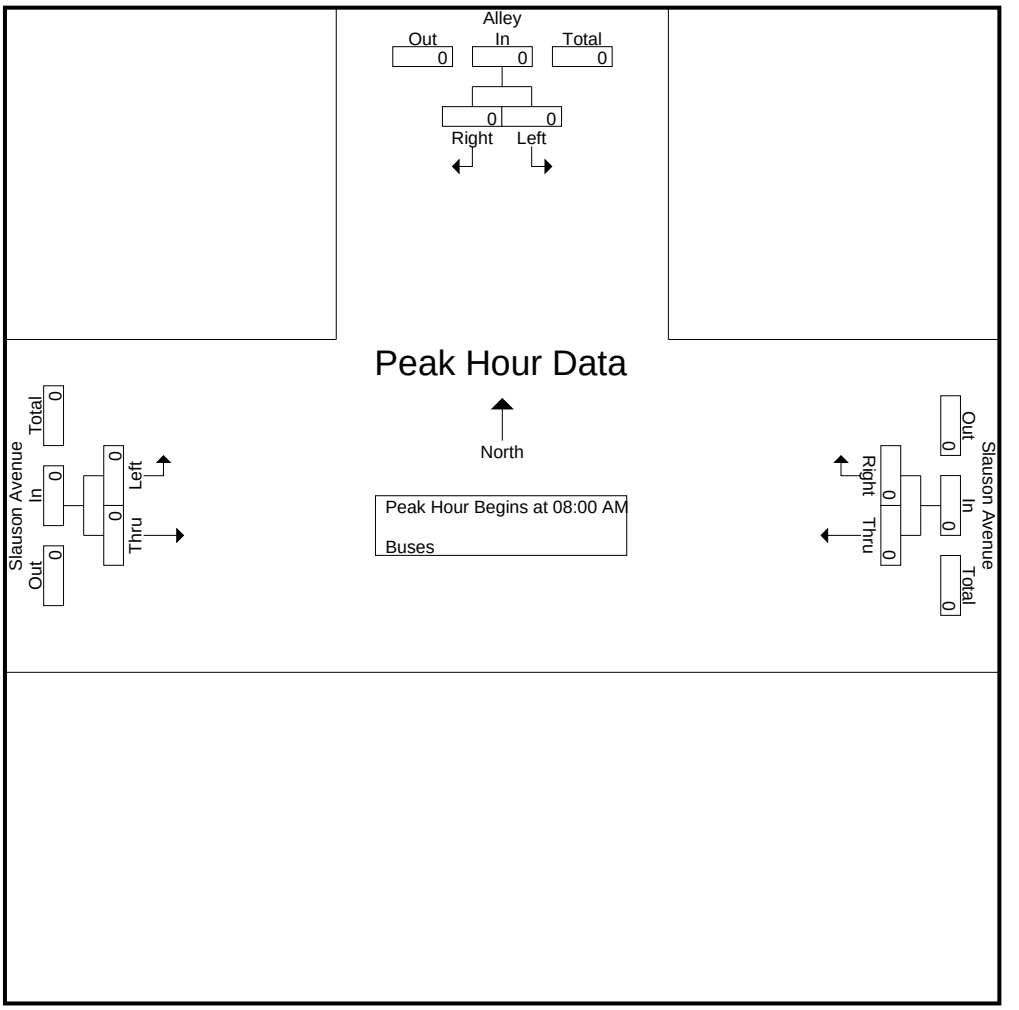

Peak Hour Analysis From 08:00 AM to 08:45 AM - Peak 1 of 1
Peak Hour for Each Approach Begins at:

	08:00 AM			08:00 AM			08:00 AM		
+0 mins.	0	0	0	0	0	0	0	0	0
+15 mins.	0	0	0	0	0	0	0	0	0
+30 mins.	0	0	0	0	0	0	0	0	0
+45 mins.	0	0	0	0	0	0	0	0	0
Total Volume	0	0	0	0	0	0	0	0	0
% App. Total	0	0		0	0		0	0	
PHF	.000	.000	.000	.000	.000	.000	.000	.000	.000

Counts Unlimited
PO Box 1178
Corona, CA 92878
(951) 268-6268

City of Culver City
N/S: Alley
E/W: Slauson Avenue
Weather: Clear

File Name : CVC_Alley_Slauson_pm
Site Code : 16619271
Start Date : 4/25/2019
Page No : 1

Groups Printed- Passenger Vehicles - Dual Wheeled Trucks - Buses

	Alley Southbound			Slauson Avenue Westbound			Slauson Avenue Eastbound			
Start Time	Left	Right	App. Total	Thru	Right	App. Total	Left	Thru	App. Total	Int. Total
03:00 PM	12	4	16	68	10	78	0	32	32	126
03:15 PM	13	1	14	52	5	57	1	86	87	158
03:30 PM	11	5	16	42	12	54	2	103	105	175
03:45 PM	13	1	14	39	10	49	2	60	62	125
Total	49	11	60	201	37	238	5	281	286	584
04:00 PM	16	4	20	47	11	58	2	68	70	148
04:15 PM	13	5	18	45	4	49	3	64	67	134
04:30 PM	11	2	13	49	9	58	3	74	77	148
04:45 PM	10	2	12	38	9	47	2	53	55	114
Total	50	13	63	179	33	212	10	259	269	544
05:00 PM	20	6	26	48	10	58	3	77	80	164
05:15 PM	10	4	14	47	13	60	4	99	103	177
05:30 PM	26	7	33	56	12	68	6	97	103	204
05:45 PM	9	5	14	34	6	40	2	75	77	131
Total	65	22	87	185	41	226	15	348	363	676
Grand Total	164	46	210	565	111	676	30	888	918	1804
Apprch %	78.1	21.9		83.6	16.4		3.3	96.7		
Total %	9.1	2.5	11.6	31.3	6.2	37.5	1.7	49.2	50.9	
Passenger Vehicles	159	46	205	561	109	670	29	877	906	1781
% Passenger Vehicles	97	100	97.6	99.3	98.2	99.1	96.7	98.8	98.7	98.7
Dual Wheeled Trucks	5	0	5	4	2	6	1	11	12	23
% Dual Wheeled Trucks										
Buses	0	0	0	0	0	0	0	0	0	0
% Buses	0	0	0	0	0	0	0	0	0	0

	Alley Southbound			Slauson Avenue Westbound			Slauson Avenue Eastbound			
Start Time	Left	Right	App. Total	Thru	Right	App. Total	Left	Thru	App. Total	Int. Total
Peak Hour Analysis From 03:00 PM to 05:45 PM - Peak 1 of 1										
Peak Hour for Entire Intersection Begins at 05:00 PM										
05:00 PM	20	6	26	48	10	58	3	77	80	164
05:15 PM	10	4	14	47	**13**	60	4	**99**	**103**	177
05:30 PM	**26**	**7**	**33**	**56**	12	**68**	**6**	97	103	**204**
05:45 PM	9	5	14	34	6	40	2	75	77	131
Total Volume	65	22	87	185	41	226	15	348	363	676
% App. Total	74.7	25.3		81.9	18.1		4.1	95.9		
PHF	.625	.786	.659	.826	.788	.831	.625	.879	.881	.828

Counts Unlimited
PO Box 1178
Corona, CA 92878
(951) 268-6268

City of Culver City
N/S: Alley
E/W: Slauson Avenue
Weather: Clear

File Name : CVC_Alley_Slauson_pm
Site Code : 16619271
Start Date : 4/25/2019
Page No : 2

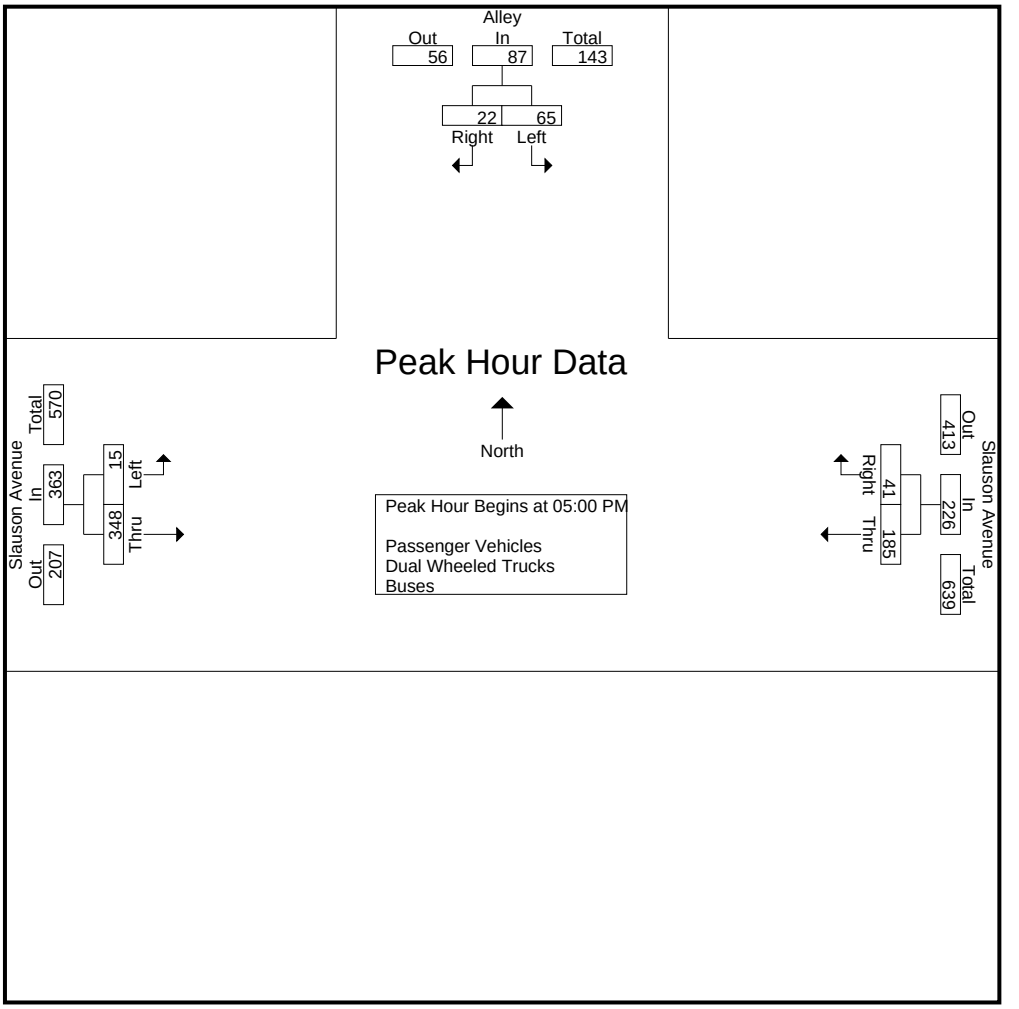

Peak Hour Analysis From 03:00 PM to 05:45 PM - Peak 1 of 1
Peak Hour for Each Approach Begins at:

	05:00 PM			03:00 PM			05:00 PM		
+0 mins.	20	6	26	**68**	10	**78**	3	77	80
+15 mins.	10	4	14	52	5	57	4	**99**	**103**
+30 mins.	**26**	**7**	**33**	42	**12**	54	**6**	97	103
+45 mins.	9	5	14	39	10	49	2	75	77
Total Volume	65	22	87	201	37	238	15	348	363
% App. Total	74.7	25.3		84.5	15.5		4.1	95.9	
PHF	.625	.786	.659	.739	.771	.763	.625	.879	.881

Counts Unlimited
PO Box 1178
Corona, CA 92878
(951) 268-6268

City of Culver City
N/S: Alley
E/W: Slauson Avenue
Weather: Clear

File Name : CVC_Alley_Slauson_pm
Site Code : 16619271
Start Date : 4/25/2019
Page No : 1

Groups Printed- Passenger Vehicles

	Alley Southbound			Slauson Avenue Westbound			Slauson Avenue Eastbound			
Start Time	Left	Right	App. Total	Thru	Right	App. Total	Left	Thru	App. Total	Int. Total
03:00 PM	12	4	16	67	10	77	0	30	30	123
03:15 PM	13	1	14	52	4	56	1	84	85	155
03:30 PM	9	5	14	41	12	53	2	98	100	167
03:45 PM	13	1	14	39	10	49	2	59	61	124
Total	47	11	58	199	36	235	5	271	276	569
04:00 PM	16	4	20	47	11	58	2	68	70	148
04:15 PM	12	5	17	45	4	49	3	64	67	133
04:30 PM	11	2	13	47	9	56	3	73	76	145
04:45 PM	10	2	12	38	9	47	2	53	55	114
Total	49	13	62	177	33	210	10	258	268	540
05:00 PM	20	6	26	48	10	58	3	77	80	164
05:15 PM	10	4	14	47	13	60	3	99	102	176
05:30 PM	25	7	32	56	11	67	6	97	103	202
05:45 PM	8	5	13	34	6	40	2	75	77	130
Total	63	22	85	185	40	225	14	348	362	672
Grand Total	159	46	205	561	109	670	29	877	906	1781
Apprch %	77.6	22.4		83.7	16.3		3.2	96.8		
Total %	8.9	2.6	11.5	31.5	6.1	37.6	1.6	49.2	50.9	

	Alley Southbound			Slauson Avenue Westbound			Slauson Avenue Eastbound			
Start Time	Left	Right	App. Total	Thru	Right	App. Total	Left	Thru	App. Total	Int. Total
Peak Hour Analysis From 05:00 PM to 05:45 PM - Peak 1 of 1										
Peak Hour for Entire Intersection Begins at 05:00 PM										
05:00 PM	20	6	26	48	10	58	3	77	80	164
05:15 PM	10	4	14	47	**13**	60	3	**99**	102	176
05:30 PM	**25**	**7**	**32**	**56**	11	**67**	**6**	97	**103**	**202**
05:45 PM	8	5	13	34	6	40	2	75	77	130
Total Volume	63	22	85	185	40	225	14	348	362	672
% App. Total	74.1	25.9		82.2	17.8		3.9	96.1		
PHF	.630	.786	.664	.826	.769	.840	.583	.879	.879	.832

Counts Unlimited
PO Box 1178
Corona, CA 92878
(951) 268-6268

City of Culver City
N/S: Alley
E/W: Slauson Avenue
Weather: Clear

File Name : CVC_Alley_Slauson_pm
Site Code : 16619271
Start Date : 4/25/2019
Page No : 2

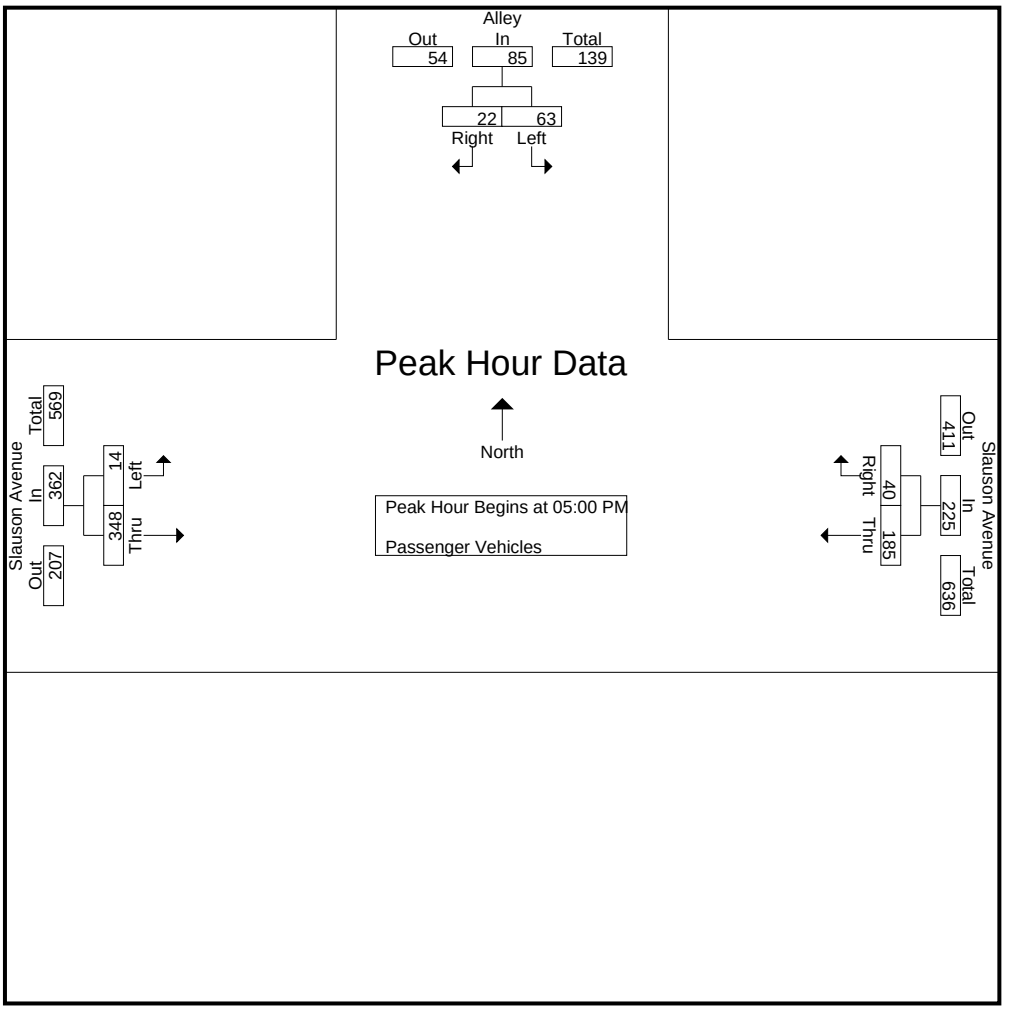

Peak Hour Analysis From 05:00 PM to 05:45 PM - Peak 1 of 1
Peak Hour for Each Approach Begins at:

	05:00 PM			05:00 PM			05:00 PM		
+0 mins.	20	6	26	48	10	58	3	77	80
+15 mins.	10	4	14	47	**13**	60	3	**99**	102
+30 mins.	**25**	**7**	**32**	**56**	11	**67**	**6**	97	**103**
+45 mins.	8	5	13	34	6	40	2	75	77
Total Volume	63	22	85	185	40	225	14	348	362
% App. Total	74.1	25.9		82.2	17.8		3.9	96.1	
PHF	.630	.786	.664	.826	.769	.840	.583	.879	.879

Counts Unlimited
PO Box 1178
Corona, CA 92878
(951) 268-6268

City of Culver City
N/S: Alley
E/W: Slauson Avenue
Weather: Clear

File Name : CVC_Alley_Slauson_pm
Site Code : 16619271
Start Date : 4/25/2019
Page No : 1

Groups Printed- Dual Wheeled Trucks

	Alley Southbound			Slauson Avenue Westbound			Slauson Avenue Eastbound			
Start Time	Left	Right	App. Total	Thru	Right	App. Total	Left	Thru	App. Total	Int. Total
03:00 PM	0	0	0	1	0	1	0	2	2	3
03:15 PM	0	0	0	0	1	1	0	2	2	3
03:30 PM	2	0	2	1	0	1	0	5	5	8
03:45 PM	0	0	0	0	0	0	0	1	1	1
Total	2	0	2	2	1	3	0	10	10	15
04:00 PM	0	0	0	0	0	0	0	0	0	0
04:15 PM	1	0	1	0	0	0	0	0	0	1
04:30 PM	0	0	0	2	0	2	0	1	1	3
04:45 PM	0	0	0	0	0	0	0	0	0	0
Total	1	0	1	2	0	2	0	1	1	4
05:00 PM	0	0	0	0	0	0	0	0	0	0
05:15 PM	0	0	0	0	0	0	1	0	1	1
05:30 PM	1	0	1	0	1	1	0	0	0	2
05:45 PM	1	0	1	0	0	0	0	0	0	1
Total	2	0	2	0	1	1	1	0	1	4
Grand Total	5	0	5	4	2	6	1	11	12	23
Apprch %	100	0		66.7	33.3		8.3	91.7		
Total %	21.7	0	21.7	17.4	8.7	26.1	4.3	47.8	52.2	

	Alley Southbound			Slauson Avenue Westbound			Slauson Avenue Eastbound			
Start Time	Left	Right	App. Total	Thru	Right	App. Total	Left	Thru	App. Total	Int. Total
Peak Hour Analysis From 05:00 PM to 05:45 PM - Peak 1 of 1										
Peak Hour for Entire Intersection Begins at 05:00 PM										
05:00 PM	0	0	0	0	0	0	0	0	0	0
05:15 PM	0	0	0	0	0	0	**1**	0	**1**	1
05:30 PM	**1**	0	**1**	0	**1**	**1**	0	0	0	**2**
05:45 PM	1	0	1	0	0	0	0	0	0	1
Total Volume	2	0	2	0	1	1	1	0	1	4
% App. Total	100	0		0	100		100	0		
PHF	.500	.000	.500	.000	.250	.250	.250	.000	.250	.500

Counts Unlimited
PO Box 1178
Corona, CA 92878
(951) 268-6268

City of Culver City
N/S: Alley
E/W: Slauson Avenue
Weather: Clear

File Name : CVC_Alley_Slauson_pm
Site Code : 16619271
Start Date : 4/25/2019
Page No : 2

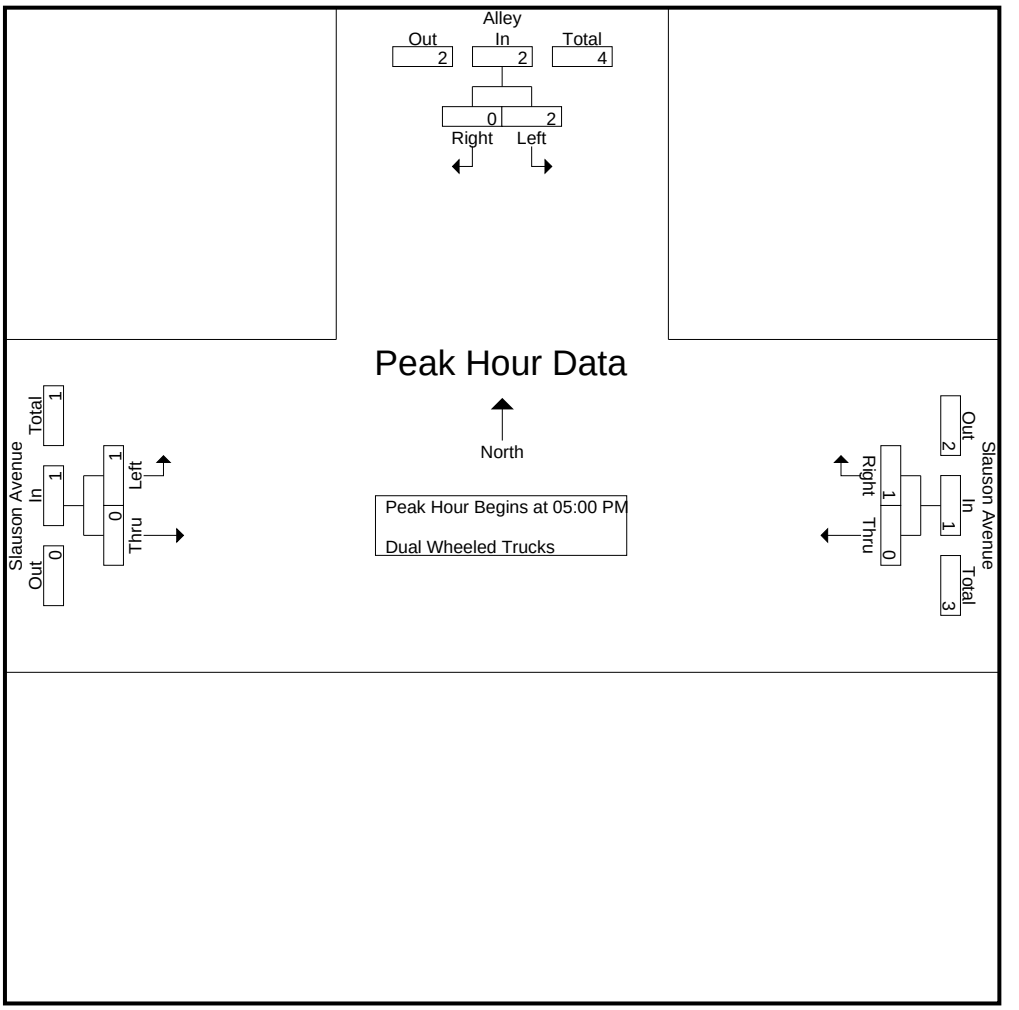

Peak Hour Analysis From 05:00 PM to 05:45 PM - Peak 1 of 1
Peak Hour for Each Approach Begins at:

	05:00 PM			05:00 PM			05:00 PM		
+0 mins.	0	0	0	0	0	0	0	0	0
+15 mins.	0	0	0	0	0	0	**1**	0	**1**
+30 mins.	**1**	0	**1**	0	**1**	**1**	0	0	0
+45 mins.	1	0	1	0	0	0	0	0	0
Total Volume	2	0	2	0	1	1	1	0	1
% App. Total	100	0		0	100		100	0	
PHF	.500	.000	.500	.000	.250	.250	.250	.000	.250

Counts Unlimited
PO Box 1178
Corona, CA 92878
(951) 268-6268

City of Culver City
N/S: Alley
E/W: Slauson Avenue
Weather: Clear

File Name : CVC_Alley_Slauson_pm
Site Code : 16619271
Start Date : 4/25/2019
Page No : 1

Groups Printed- Buses

	Alley Southbound			Slauson Avenue Westbound			Slauson Avenue Eastbound			
Start Time	Left	Right	App. Total	Thru	Right	App. Total	Left	Thru	App. Total	Int. Total
03:00 PM	0	0	0	0	0	0	0	0	0	0
03:15 PM	0	0	0	0	0	0	0	0	0	0
03:30 PM	0	0	0	0	0	0	0	0	0	0
03:45 PM	0	0	0	0	0	0	0	0	0	0
Total	0	0	0	0	0	0	0	0	0	0
04:00 PM	0	0	0	0	0	0	0	0	0	0
04:15 PM	0	0	0	0	0	0	0	0	0	0
04:30 PM	0	0	0	0	0	0	0	0	0	0
04:45 PM	0	0	0	0	0	0	0	0	0	0
Total	0	0	0	0	0	0	0	0	0	0
05:00 PM	0	0	0	0	0	0	0	0	0	0
05:15 PM	0	0	0	0	0	0	0	0	0	0
05:30 PM	0	0	0	0	0	0	0	0	0	0
05:45 PM	0	0	0	0	0	0	0	0	0	0
Total	0	0	0	0	0	0	0	0	0	0
Grand Total	0	0	0	0	0	0	0	0	0	0
Apprch %	0	0		0	0		0	0		
Total %										

	Alley Southbound			Slauson Avenue Westbound			Slauson Avenue Eastbound			
Start Time	Left	Right	App. Total	Thru	Right	App. Total	Left	Thru	App. Total	Int. Total
Peak Hour Analysis From 05:00 PM to 05:45 PM - Peak 1 of 1										
Peak Hour for Entire Intersection Begins at 05:00 PM										
05:00 PM	0	0	0	0	0	0	0	0	0	0
05:15 PM	0	0	0	0	0	0	0	0	0	0
05:30 PM	0	0	0	0	0	0	0	0	0	0
05:45 PM	0	0	0	0	0	0	0	0	0	0
Total Volume	0	0	0	0	0	0	0	0	0	0
% App. Total	0	0		0	0		0	0		
PHF	.000	.000	.000	.000	.000	.000	.000	.000	.000	.000

Counts Unlimited
PO Box 1178
Corona, CA 92878
(951) 268-6268

City of Culver City
N/S: Alley
E/W: Slauson Avenue
Weather: Clear

File Name : CVC_Alley_Slauson_pm
Site Code : 16619271
Start Date : 4/25/2019
Page No : 2

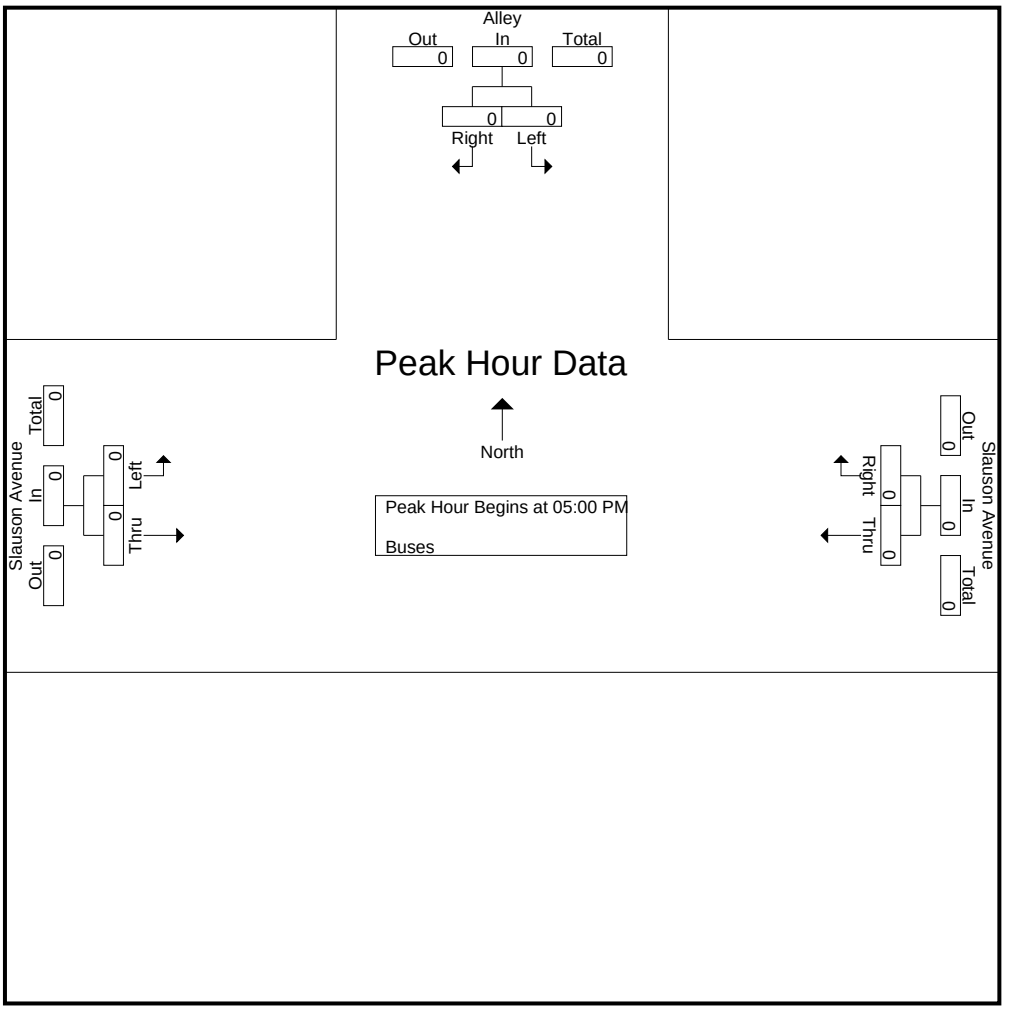

Peak Hour Analysis From 05:00 PM to 05:45 PM - Peak 1 of 1
Peak Hour for Each Approach Begins at:

	05:00 PM			05:00 PM			05:00 PM		
+0 mins.	0	0	0	0	0	0	0	0	0
+15 mins.	0	0	0	0	0	0	0	0	0
+30 mins.	0	0	0	0	0	0	0	0	0
+45 mins.	0	0	0	0	0	0	0	0	0
Total Volume	0	0	0	0	0	0	0	0	0
% App. Total	0	0		0	0		0	0	
PHF	.000	.000	.000	.000	.000	.000	.000	.000	.000

Location: Culver City
N/S: Alley
E/W: Slauson Avenue

Date: 4/25/2019
Day: Thursday

PEDESTRIANS

	North Leg Alley	East Leg Slauson Avenue	South Leg Alley	West Leg Slauson Avenue	
	Pedestrians	Pedestrians	Pedestrians	Pedestrians	
7:00 AM	4	0	0	0	4
7:15 AM	0	0	0	0	0
7:30 AM	3	1	0	1	5
7:45 AM	0	0	0	0	0
8:00 AM	4	0	0	0	4
8:15 AM	2	1	0	0	3
8:30 AM	2	0	0	0	2
8:45 AM	4	0	0	0	4
9:00 AM	0	0	0	0	0
9:15 AM	0	0	0	0	0
9:30 AM	4	0	0	0	4
9:45 AM	5	1	0	0	6
TOTAL VOLUMES:	28	3	0	1	32

	North Leg Alley	East Leg Slauson Avenue	South Leg Alley	West Leg Slauson Avenue	
	Pedestrians	Pedestrians	Pedestrians	Pedestrians	
3:00 PM	2	0	0	0	2
3:15 PM	3	2	0	0	5
3:30 PM	0	0	0	1	1
3:45 PM	3	0	0	0	3
4:00 PM	0	0	0	0	0
4:15 PM	2	0	0	0	2
4:30 PM	0	0	0	0	0
4:45 PM	0	0	0	0	0
5:00 PM	0	1	0	2	3
5:15 PM	2	1	0	1	4
5:30 PM	0	1	0	0	1
5:45 PM	1	1	0	0	2
TOTAL VOLUMES:	13	6	0	4	23

Counts Unlimited, Inc.
PO Box 1178
Corona, CA 92878
951-268-6268

Location: Culver City
N/S: Alley
E/W: Slauson Avenue

Date: 4/25/2019
Day: Thursday

BICYCLES

	Southbound Alley			Westbound Slauson Avenue			Northbound Alley			Eastbound Slauson Avenue			
	Left	Thru	Right	Left	Thru	Right	Left	Thru	Right	Left	Thru	Right	
7:00 AM	0	0	0	0	1	0	0	0	0	0	1	0	2
7:15 AM	0	0	0	0	0	0	0	0	0	0	0	0	0
7:30 AM	0	0	0	0	0	0	0	0	0	0	0	0	0
7:45 AM	0	0	0	0	0	0	0	0	0	0	0	0	0
8:00 AM	0	0	0	0	0	0	0	0	0	0	1	0	1
8:15 AM	0	0	0	0	1	0	0	0	0	0	3	0	4
8:30 AM	0	0	0	0	0	0	0	0	0	0	1	0	1
8:45 AM	0	0	0	0	1	0	0	0	0	0	1	0	2
9:00 AM	0	0	0	0	0	0	0	0	0	0	1	0	1
9:15 AM	0	0	0	0	0	0	0	0	0	0	0	0	0
9:30 AM	0	0	0	0	0	0	0	0	0	0	1	0	1
9:45 AM	0	0	0	0	0	0	0	0	0	0	1	0	1
TOTAL VOLUMES:	0	0	0	0	3	0	0	0	0	0	10	0	13

	Southbound Alley			Westbound Slauson Avenue			Northbound Alley			Eastbound Slauson Avenue			
	Left	Thru	Right	Left	Thru	Right	Left	Thru	Right	Left	Thru	Right	
3:00 PM	0	0	0	0	0	0	0	0	0	0	0	0	0
3:15 PM	0	0	0	0	0	0	0	0	0	0	0	0	0
3:30 PM	0	0	0	0	0	0	0	0	0	0	0	0	0
3:45 PM	0	0	0	0	0	0	0	0	0	0	0	0	0
4:00 PM	0	0	0	0	1	0	0	0	0	0	0	0	1
4:15 PM	0	0	0	0	1	0	0	0	0	0	2	0	3
4:30 PM	0	0	0	0	0	0	0	0	0	0	0	0	0
4:45 PM	0	0	1	0	0	0	0	0	0	1	1	0	3
5:00 PM	0	0	0	0	0	0	0	0	0	0	0	0	0
5:15 PM	0	0	1	0	0	0	0	0	0	0	0	0	1
5:30 PM	0	0	1	0	0	0	0	0	0	0	1	0	2
5:45 PM	0	0	0	0	0	0	0	0	0	0	1	0	1
TOTAL VOLUMES:	0	0	3	0	2	0	0	0	0	1	5	0	11

Counts Unlimited, Inc.
PO Box 1178
Corona, CA 92878
951-268-6268

Counts Unlimited
PO Box 1178
Corona, CA 92878
(951) 268-6268

City of Culver City
N/S: Segrell Way
E/W: Slauson Avenue
Weather: Clear

File Name : CVC_Segrell_Slauson_AM
Site Code : 16619271
Start Date : 4/25/2019
Page No : 1

Groups Printed- Passenger Vehicles - Dual Wheeled Trucks - Buses

	Segrell Way Southbound			Slauson Avenue Westbound			Slauson Avenue Eastbound			
Start Time	Left	Right	App. Total	Thru	Right	App. Total	Left	Thru	App. Total	Int. Total
07:00 AM	3	1	4	41	11	52	1	18	19	75
07:15 AM	3	2	5	36	12	48	1	27	28	81
07:30 AM	4	1	5	36	25	61	1	28	29	95
07:45 AM	8	1	9	56	32	88	3	28	31	128
Total	18	5	23	169	80	249	6	101	107	379
08:00 AM	5	1	6	68	15	83	2	35	37	126
08:15 AM	10	2	12	86	20	106	3	27	30	148
08:30 AM	7	2	9	99	19	118	5	58	63	190
08:45 AM	6	0	6	36	7	43	3	78	81	130
Total	28	5	33	289	61	350	13	198	211	594
09:00 AM	10	2	12	31	11	42	1	23	24	78
09:15 AM	5	0	5	32	6	38	0	16	16	59
09:30 AM	5	0	5	24	7	31	1	14	15	51
09:45 AM	11	1	12	30	6	36	4	21	25	73
Total	31	3	34	117	30	147	6	74	80	261
Grand Total	77	13	90	575	171	746	25	373	398	1234
Apprch %	85.6	14.4		77.1	22.9		6.3	93.7		
Total %	6.2	1.1	7.3	46.6	13.9	60.5	2	30.2	32.3	
Passenger Vehicles	77	13	90	567	171	738	25	371	396	1224
% Passenger Vehicles	100	100	100	98.6	100	98.9	100	99.5	99.5	99.2
Dual Wheeled Trucks	0	0	0	8	0	8	0	2	2	10
% Dual Wheeled Trucks										
Buses	0	0	0	0	0	0	0	0	0	0
% Buses	0	0	0	0	0	0	0	0	0	0

	Segrell Way Southbound			Slauson Avenue Westbound			Slauson Avenue Eastbound			
Start Time	Left	Right	App. Total	Thru	Right	App. Total	Left	Thru	App. Total	Int. Total
Peak Hour Analysis From 07:00 AM to 09:45 AM - Peak 1 of 1										
Peak Hour for Entire Intersection Begins at 08:00 AM										
08:00 AM	5	1	6	68	15	83	2	35	37	126
08:15 AM	**10**	**2**	**12**	86	**20**	106	3	27	30	148
08:30 AM	7	2	9	**99**	19	**118**	**5**	58	63	**190**
08:45 AM	6	0	6	36	7	43	3	**78**	**81**	130
Total Volume	28	5	33	289	61	350	13	198	211	594
% App. Total	84.8	15.2		82.6	17.4		6.2	93.8		
PHF	.700	.625	.688	.730	.763	.742	.650	.635	.651	.782

Counts Unlimited
PO Box 1178
Corona, CA 92878
(951) 268-6268

City of Culver City
N/S: Segrell Way
E/W: Slauson Avenue
Weather: Clear

File Name : CVC_Segrell_Slauson_AM
Site Code : 16619271
Start Date : 4/25/2019
Page No : 2

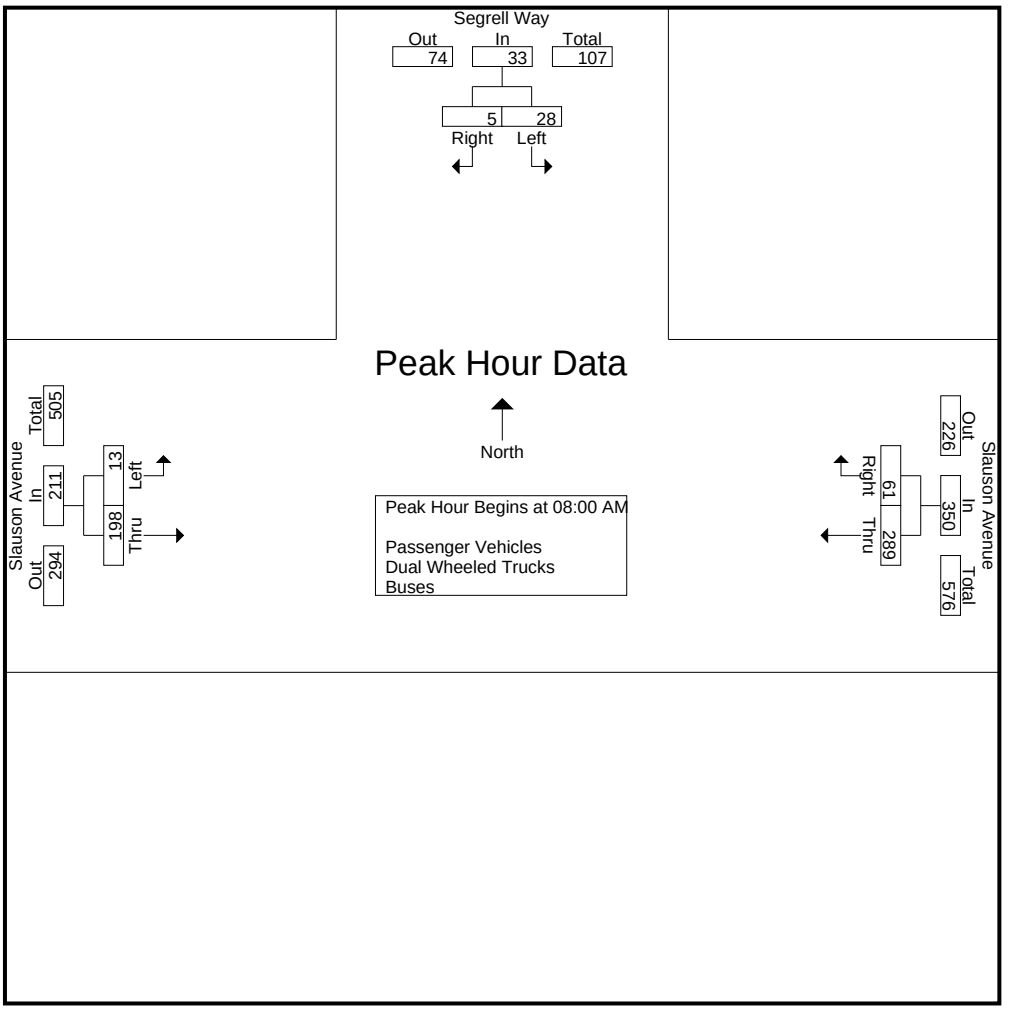

Peak Hour Analysis From 07:00 AM to 09:45 AM - Peak 1 of 1
Peak Hour for Each Approach Begins at:

	08:15 AM			07:45 AM			08:00 AM		
+0 mins.	**10**	**2**	**12**	56	**32**	88	2	35	37
+15 mins.	7	2	9	68	15	83	3	27	30
+30 mins.	6	0	6	86	20	106	**5**	58	63
+45 mins.	10	2	12	**99**	19	**118**	3	**78**	**81**
Total Volume	33	6	39	309	86	395	13	198	211
% App. Total	84.6	15.4		78.2	21.8		6.2	93.8	
PHF	.825	.750	.813	.780	.672	.837	.650	.635	.651

Counts Unlimited
PO Box 1178
Corona, CA 92878
(951) 268-6268

City of Culver City
N/S: Segrell Way
E/W: Slauson Avenue
Weather: Clear

File Name : CVC_Segrell_Slauson_AM
Site Code : 16619271
Start Date : 4/25/2019
Page No : 1

Groups Printed- Passenger Vehicles

	Segrell Way Southbound			Slauson Avenue Westbound			Slauson Avenue Eastbound			
Start Time	Left	Right	App. Total	Thru	Right	App. Total	Left	Thru	App. Total	Int. Total
07:00 AM	3	1	4	41	11	52	1	18	19	75
07:15 AM	3	2	5	35	12	47	1	27	28	80
07:30 AM	4	1	5	35	25	60	1	27	28	93
07:45 AM	8	1	9	56	32	88	3	28	31	128
Total	18	5	23	167	80	247	6	100	106	376
08:00 AM	5	1	6	67	15	82	2	35	37	125
08:15 AM	10	2	12	86	20	106	3	27	30	148
08:30 AM	7	2	9	99	19	118	5	58	63	190
08:45 AM	6	0	6	36	7	43	3	78	81	130
Total	28	5	33	288	61	349	13	198	211	593
09:00 AM	10	2	12	31	11	42	1	22	23	77
09:15 AM	5	0	5	30	6	36	0	16	16	57
09:30 AM	5	0	5	22	7	29	1	14	15	49
09:45 AM	11	1	12	29	6	35	4	21	25	72
Total	31	3	34	112	30	142	6	73	79	255
Grand Total	77	13	90	567	171	738	25	371	396	1224
Apprch %	85.6	14.4		76.8	23.2		6.3	93.7		
Total %	6.3	1.1	7.4	46.3	14	60.3	2	30.3	32.4	

	Segrell Way Southbound			Slauson Avenue Westbound			Slauson Avenue Eastbound			
Start Time	Left	Right	App. Total	Thru	Right	App. Total	Left	Thru	App. Total	Int. Total
Peak Hour Analysis From 08:00 AM to 08:45 AM - Peak 1 of 1										
Peak Hour for Entire Intersection Begins at 08:00 AM										
08:00 AM	5	1	6	67	15	82	2	35	37	125
08:15 AM	**10**	**2**	**12**	86	**20**	106	3	27	30	148
08:30 AM	7	2	9	**99**	19	**118**	**5**	58	63	**190**
08:45 AM	6	0	6	36	7	43	3	**78**	**81**	130
Total Volume	28	5	33	288	61	349	13	198	211	593
% App. Total	84.8	15.2		82.5	17.5		6.2	93.8		
PHF	.700	.625	.688	.727	.763	.739	.650	.635	.651	.780

Counts Unlimited
PO Box 1178
Corona, CA 92878
(951) 268-6268

City of Culver City
N/S: Segrell Way
E/W: Slauson Avenue
Weather: Clear

File Name : CVC_Segrell_Slauson_AM
Site Code : 16619271
Start Date : 4/25/2019
Page No : 2

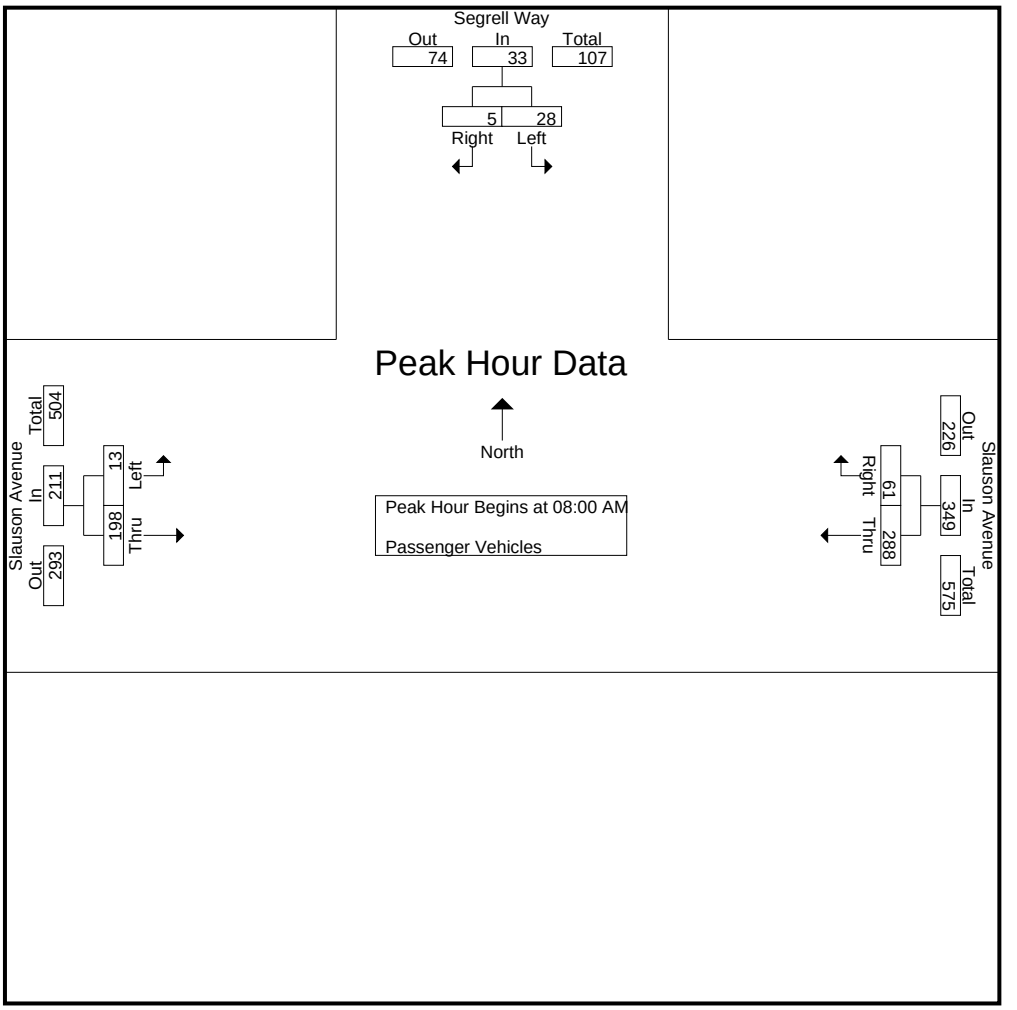

Peak Hour Analysis From 08:00 AM to 08:45 AM - Peak 1 of 1
Peak Hour for Each Approach Begins at:

	08:00 AM			08:00 AM			08:00 AM		
+0 mins.	5	1	6	67	15	82	2	35	37
+15 mins.	**10**	**2**	**12**	86	**20**	106	3	27	30
+30 mins.	7	2	9	**99**	19	**118**	**5**	58	63
+45 mins.	6	0	6	36	7	43	3	**78**	**81**
Total Volume	28	5	33	288	61	349	13	198	211
% App. Total	84.8	15.2		82.5	17.5		6.2	93.8	
PHF	.700	.625	.688	.727	.763	.739	.650	.635	.651

Counts Unlimited
PO Box 1178
Corona, CA 92878
(951) 268-6268

City of Culver City
N/S: Segrell Way
E/W: Slauson Avenue
Weather: Clear

File Name : CVC_Segrell_Slauson_AM
Site Code : 16619271
Start Date : 4/25/2019
Page No : 1

Groups Printed- Dual Wheeled Trucks

	Segrell Way Southbound			Slauson Avenue Westbound			Slauson Avenue Eastbound			
Start Time	Left	Right	App. Total	Thru	Right	App. Total	Left	Thru	App. Total	Int. Total
07:00 AM	0	0	0	0	0	0	0	0	0	0
07:15 AM	0	0	0	1	0	1	0	0	0	1
07:30 AM	0	0	0	1	0	1	0	1	1	2
07:45 AM	0	0	0	0	0	0	0	0	0	0
Total	0	0	0	2	0	2	0	1	1	3
08:00 AM	0	0	0	1	0	1	0	0	0	1
08:15 AM	0	0	0	0	0	0	0	0	0	0
08:30 AM	0	0	0	0	0	0	0	0	0	0
08:45 AM	0	0	0	0	0	0	0	0	0	0
Total	0	0	0	1	0	1	0	0	0	1
09:00 AM	0	0	0	0	0	0	0	1	1	1
09:15 AM	0	0	0	2	0	2	0	0	0	2
09:30 AM	0	0	0	2	0	2	0	0	0	2
09:45 AM	0	0	0	1	0	1	0	0	0	1
Total	0	0	0	5	0	5	0	1	1	6
Grand Total	0	0	0	8	0	8	0	2	2	10
Apprch %	0	0		100	0		0	100		
Total %	0	0	0	80	0	80	0	20	20	

	Segrell Way Southbound			Slauson Avenue Westbound			Slauson Avenue Eastbound			
Start Time	Left	Right	App. Total	Thru	Right	App. Total	Left	Thru	App. Total	Int. Total
Peak Hour Analysis From 08:00 AM to 08:45 AM - Peak 1 of 1										
Peak Hour for Entire Intersection Begins at 08:00 AM										
08:00 AM	0	0	0	**1**	0	**1**	0	0	0	**1**
08:15 AM	0	0	0	0	0	0	0	0	0	0
08:30 AM	0	0	0	0	0	0	0	0	0	0
08:45 AM	0	0	0	0	0	0	0	0	0	0
Total Volume	0	0	0	1	0	1	0	0	0	1
% App. Total	0	0		100	0		0	0		
PHF	.000	.000	.000	.250	.000	.250	.000	.000	.000	.250

Counts Unlimited
PO Box 1178
Corona, CA 92878
(951) 268-6268

City of Culver City
N/S: Segrell Way
E/W: Slauson Avenue
Weather: Clear

File Name : CVC_Segrell_Slauson_AM
Site Code : 16619271
Start Date : 4/25/2019
Page No : 2

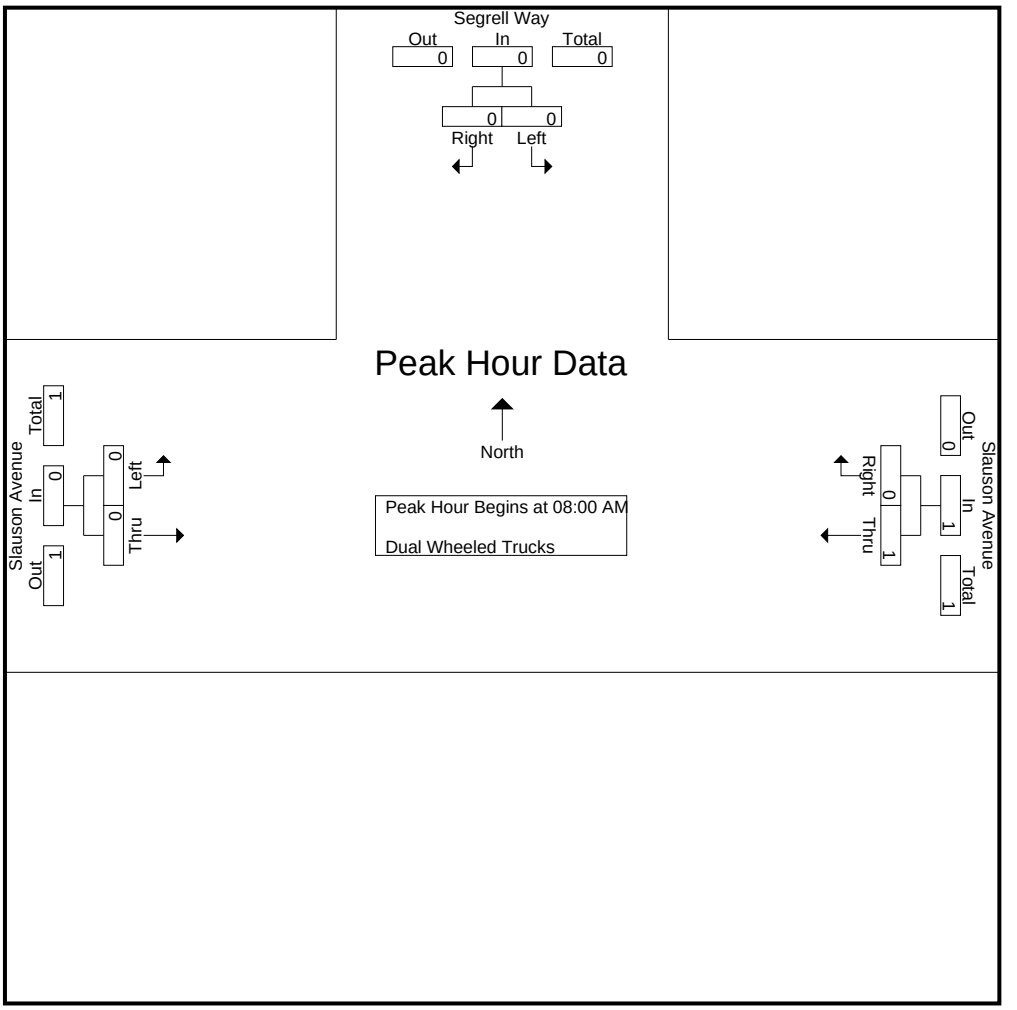

Peak Hour Analysis From 08:00 AM to 08:45 AM - Peak 1 of 1
Peak Hour for Each Approach Begins at:

	08:00 AM			08:00 AM			08:00 AM		
+0 mins.	0	0	0	**1**	0	**1**	0	0	0
+15 mins.	0	0	0	0	0	0	0	0	0
+30 mins.	0	0	0	0	0	0	0	0	0
+45 mins.	0	0	0	0	0	0	0	0	0
Total Volume	0	0	0	1	0	1	0	0	0
% App. Total	0	0		100	0		0	0	
PHF	.000	.000	.000	.250	.000	.250	.000	.000	.000

Counts Unlimited
PO Box 1178
Corona, CA 92878
(951) 268-6268

City of Culver City
N/S: Segrell Way
E/W: Slauson Avenue
Weather: Clear

File Name : CVC_Segrell_Slauson_AM
Site Code : 16619271
Start Date : 4/25/2019
Page No : 1

Groups Printed- Buses

	Segrell Way Southbound			Slauson Avenue Westbound			Slauson Avenue Eastbound			
Start Time	Left	Right	App. Total	Thru	Right	App. Total	Left	Thru	App. Total	Int. Total
07:00 AM	0	0	0	0	0	0	0	0	0	0
07:15 AM	0	0	0	0	0	0	0	0	0	0
07:30 AM	0	0	0	0	0	0	0	0	0	0
07:45 AM	0	0	0	0	0	0	0	0	0	0
Total	0	0	0	0	0	0	0	0	0	0
08:00 AM	0	0	0	0	0	0	0	0	0	0
08:15 AM	0	0	0	0	0	0	0	0	0	0
08:30 AM	0	0	0	0	0	0	0	0	0	0
08:45 AM	0	0	0	0	0	0	0	0	0	0
Total	0	0	0	0	0	0	0	0	0	0
09:00 AM	0	0	0	0	0	0	0	0	0	0
09:15 AM	0	0	0	0	0	0	0	0	0	0
09:30 AM	0	0	0	0	0	0	0	0	0	0
09:45 AM	0	0	0	0	0	0	0	0	0	0
Total	0	0	0	0	0	0	0	0	0	0
Grand Total	0	0	0	0	0	0	0	0	0	0
Apprch %	0	0		0	0		0	0		
Total %										

	Segrell Way Southbound			Slauson Avenue Westbound			Slauson Avenue Eastbound			
Start Time	Left	Right	App. Total	Thru	Right	App. Total	Left	Thru	App. Total	Int. Total
Peak Hour Analysis From 08:00 AM to 08:45 AM - Peak 1 of 1										
Peak Hour for Entire Intersection Begins at 08:00 AM										
08:00 AM	0	0	0	0	0	0	0	0	0	0
08:15 AM	0	0	0	0	0	0	0	0	0	0
08:30 AM	0	0	0	0	0	0	0	0	0	0
08:45 AM	0	0	0	0	0	0	0	0	0	0
Total Volume	0	0	0	0	0	0	0	0	0	0
% App. Total	0	0		0	0		0	0		
PHF	.000	.000	.000	.000	.000	.000	.000	.000	.000	.000

Counts Unlimited
PO Box 1178
Corona, CA 92878
(951) 268-6268

City of Culver City
N/S: Segrell Way
E/W: Slauson Avenue
Weather: Clear

File Name : CVC_Segrell_Slauson_AM
Site Code : 16619271
Start Date : 4/25/2019
Page No : 2

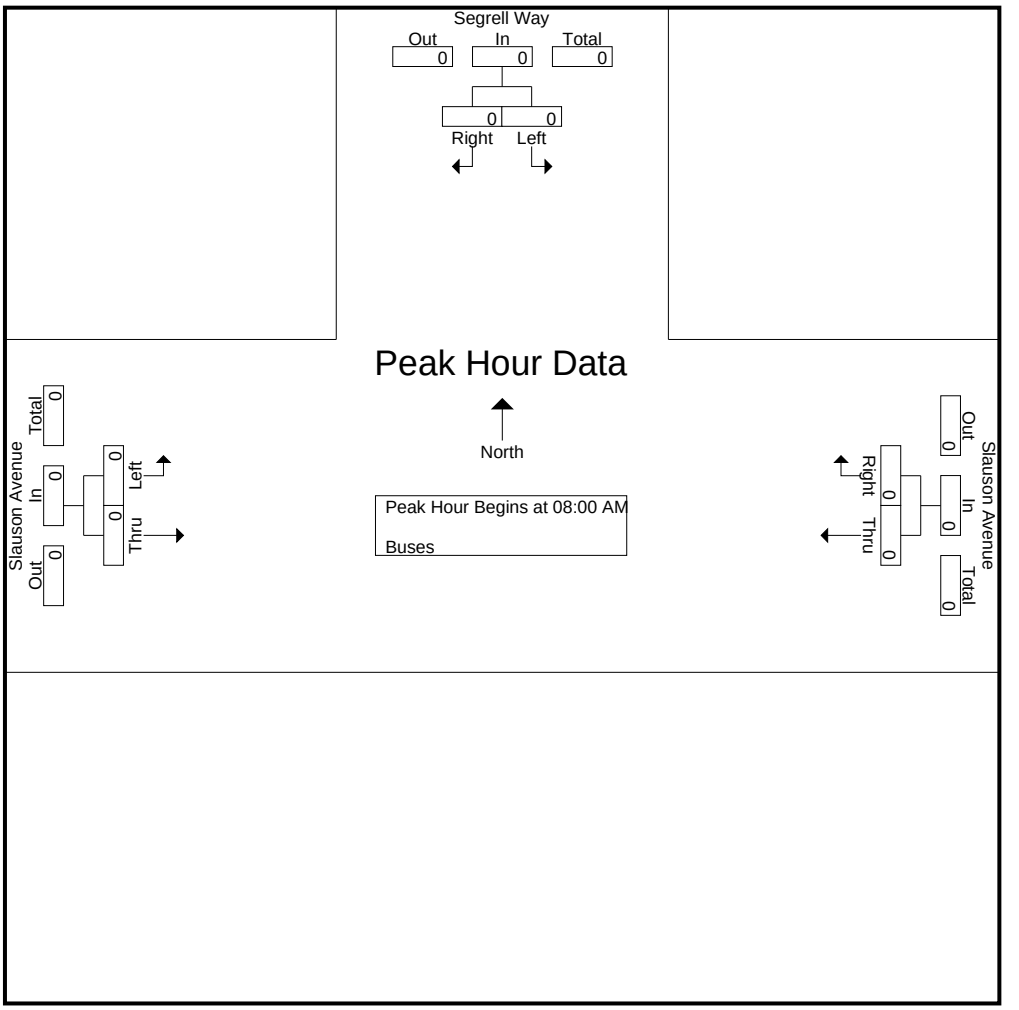

Peak Hour Analysis From 08:00 AM to 08:45 AM - Peak 1 of 1
Peak Hour for Each Approach Begins at:

	08:00 AM			08:00 AM			08:00 AM		
+0 mins.	0	0	0	0	0	0	0	0	0
+15 mins.	0	0	0	0	0	0	0	0	0
+30 mins.	0	0	0	0	0	0	0	0	0
+45 mins.	0	0	0	0	0	0	0	0	0
Total Volume	0	0	0	0	0	0	0	0	0
% App. Total	0	0		0	0		0	0	
PHF	.000	.000	.000	.000	.000	.000	.000	.000	.000

Counts Unlimited
PO Box 1178
Corona, CA 92878
(951) 268-6268

City of Culver City
N/S: Segrell Way
E/W: Slauson Avenue
Weather: Clear

File Name : CVC_Segrell_Slauson_PM
Site Code : 16619271
Start Date : 4/25/2019
Page No : 1

Groups Printed- Passenger Vehicles - Dual Wheeled Trucks - Buses

	Segrell Way Southbound			Slauson Avenue Westbound			Slauson Avenue Eastbound			
Start Time	Left	Right	App. Total	Thru	Right	App. Total	Left	Thru	App. Total	Int. Total
03:00 PM	9	4	13	57	15	72	0	20	20	105
03:15 PM	31	2	33	45	14	59	4	68	72	164
03:30 PM	37	1	38	29	7	36	2	56	58	132
03:45 PM	27	5	32	35	15	50	2	42	44	126
Total	104	12	116	166	51	217	8	186	194	527
04:00 PM	34	2	36	41	9	50	0	33	33	119
04:15 PM	26	3	29	36	11	47	4	35	39	115
04:30 PM	17	1	18	36	11	47	1	60	61	126
04:45 PM	27	0	27	35	14	49	0	32	32	108
Total	104	6	110	148	45	193	5	160	165	468
05:00 PM	35	3	38	39	11	50	1	42	43	131
05:15 PM	41	0	41	35	15	50	1	62	63	154
05:30 PM	33	2	35	41	9	50	2	60	62	147
05:45 PM	38	0	38	35	11	46	1	42	43	127
Total	147	5	152	150	46	196	5	206	211	559
Grand Total	355	23	378	464	142	606	18	552	570	1554
Apprch %	93.9	6.1		76.6	23.4		3.2	96.8		
Total %	22.8	1.5	24.3	29.9	9.1	39	1.2	35.5	36.7	
Passenger Vehicles	354	22	376	461	141	602	18	546	564	1542
% Passenger Vehicles	99.7	95.7	99.5	99.4	99.3	99.3	100	98.9	98.9	99.2
Dual Wheeled Trucks	1	1	2	3	1	4	0	6	6	12
% Dual Wheeled Trucks										
Buses	0	0	0	0	0	0	0	0	0	0
% Buses	0	0	0	0	0	0	0	0	0	0

	Segrell Way Southbound			Slauson Avenue Westbound			Slauson Avenue Eastbound			
Start Time	Left	Right	App. Total	Thru	Right	App. Total	Left	Thru	App. Total	Int. Total
Peak Hour Analysis From 03:00 PM to 05:45 PM - Peak 1 of 1										
Peak Hour for Entire Intersection Begins at 05:00 PM										
05:00 PM	35	**3**	38	39	11	**50**	1	42	43	131
05:15 PM	**41**	0	**41**	35	**15**	50	1	**62**	**63**	**154**
05:30 PM	33	2	35	**41**	9	50	**2**	60	62	147
05:45 PM	38	0	38	35	11	46	1	42	43	127
Total Volume	147	5	152	150	46	196	5	206	211	559
% App. Total	96.7	3.3		76.5	23.5		2.4	97.6		
PHF	.896	.417	.927	.915	.767	.980	.625	.831	.837	.907

Counts Unlimited
PO Box 1178
Corona, CA 92878
(951) 268-6268

City of Culver City
N/S: Segrell Way
E/W: Slauson Avenue
Weather: Clear

File Name : CVC_Segrell_Slauson_PM
Site Code : 16619271
Start Date : 4/25/2019
Page No : 2

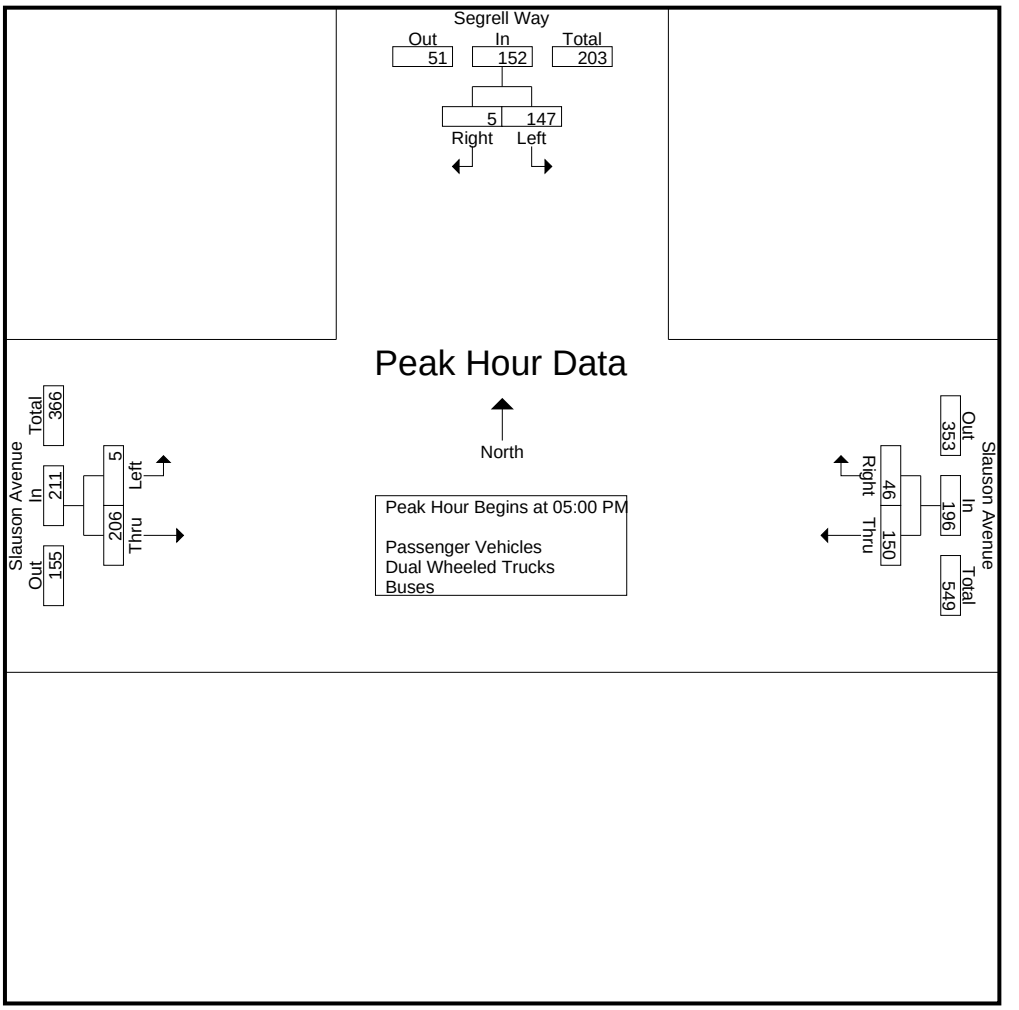

Peak Hour Analysis From 03:00 PM to 05:45 PM - Peak 1 of 1
Peak Hour for Each Approach Begins at:

	05:00 PM			03:00 PM			05:00 PM		
+0 mins.	35	**3**	38	**57**	**15**	**72**	1	42	43
+15 mins.	**41**	0	**41**	45	14	59	1	**62**	**63**
+30 mins.	33	2	35	29	7	36	**2**	60	62
+45 mins.	38	0	38	35	15	50	1	42	43
Total Volume	147	5	152	166	51	217	5	206	211
% App. Total	96.7	3.3		76.5	23.5		2.4	97.6	
PHF	.896	.417	.927	.728	.850	.753	.625	.831	.837

Counts Unlimited
PO Box 1178
Corona, CA 92878
(951) 268-6268

City of Culver City
N/S: Segrell Way
E/W: Slauson Avenue
Weather: Clear

File Name : CVC_Segrell_Slauson_PM
Site Code : 16619271
Start Date : 4/25/2019
Page No : 1

Groups Printed- Passenger Vehicles

	Segrell Way Southbound			Slauson Avenue Westbound			Slauson Avenue Eastbound			
Start Time	Left	Right	App. Total	Thru	Right	App. Total	Left	Thru	App. Total	Int. Total
03:00 PM	9	3	12	56	15	71	0	19	19	102
03:15 PM	30	2	32	44	14	58	4	66	70	160
03:30 PM	37	1	38	29	7	36	2	55	57	131
03:45 PM	27	5	32	35	15	50	2	42	44	126
Total	103	11	114	164	51	215	8	182	190	519
04:00 PM	34	2	36	41	9	50	0	33	33	119
04:15 PM	26	3	29	36	11	47	4	35	39	115
04:30 PM	17	1	18	35	10	45	1	59	60	123
04:45 PM	27	0	27	35	14	49	0	32	32	108
Total	104	6	110	147	44	191	5	159	164	465
05:00 PM	35	3	38	39	11	50	1	42	43	131
05:15 PM	41	0	41	35	15	50	1	61	62	153
05:30 PM	33	2	35	41	9	50	2	60	62	147
05:45 PM	38	0	38	35	11	46	1	42	43	127
Total	147	5	152	150	46	196	5	205	210	558
Grand Total	354	22	376	461	141	602	18	546	564	1542
Apprch %	94.1	5.9		76.6	23.4		3.2	96.8		
Total %	23	1.4	24.4	29.9	9.1	39	1.2	35.4	36.6	

	Segrell Way Southbound			Slauson Avenue Westbound			Slauson Avenue Eastbound			
Start Time	Left	Right	App. Total	Thru	Right	App. Total	Left	Thru	App. Total	Int. Total
Peak Hour Analysis From 05:00 PM to 05:45 PM - Peak 1 of 1										
Peak Hour for Entire Intersection Begins at 05:00 PM										
05:00 PM	35	**3**	38	39	11	**50**	1	42	43	131
05:15 PM	**41**	0	**41**	35	**15**	50	1	**61**	**62**	**153**
05:30 PM	33	2	35	**41**	9	50	**2**	60	62	147
05:45 PM	38	0	38	35	11	46	1	42	43	127
Total Volume	147	5	152	150	46	196	5	205	210	558
% App. Total	96.7	3.3		76.5	23.5		2.4	97.6		
PHF	.896	.417	.927	.915	.767	.980	.625	.840	.847	.912

Counts Unlimited
PO Box 1178
Corona, CA 92878
(951) 268-6268

City of Culver City
N/S: Segrell Way
E/W: Slauson Avenue
Weather: Clear

File Name : CVC_Segrell_Slauson_PM
Site Code : 16619271
Start Date : 4/25/2019
Page No : 2

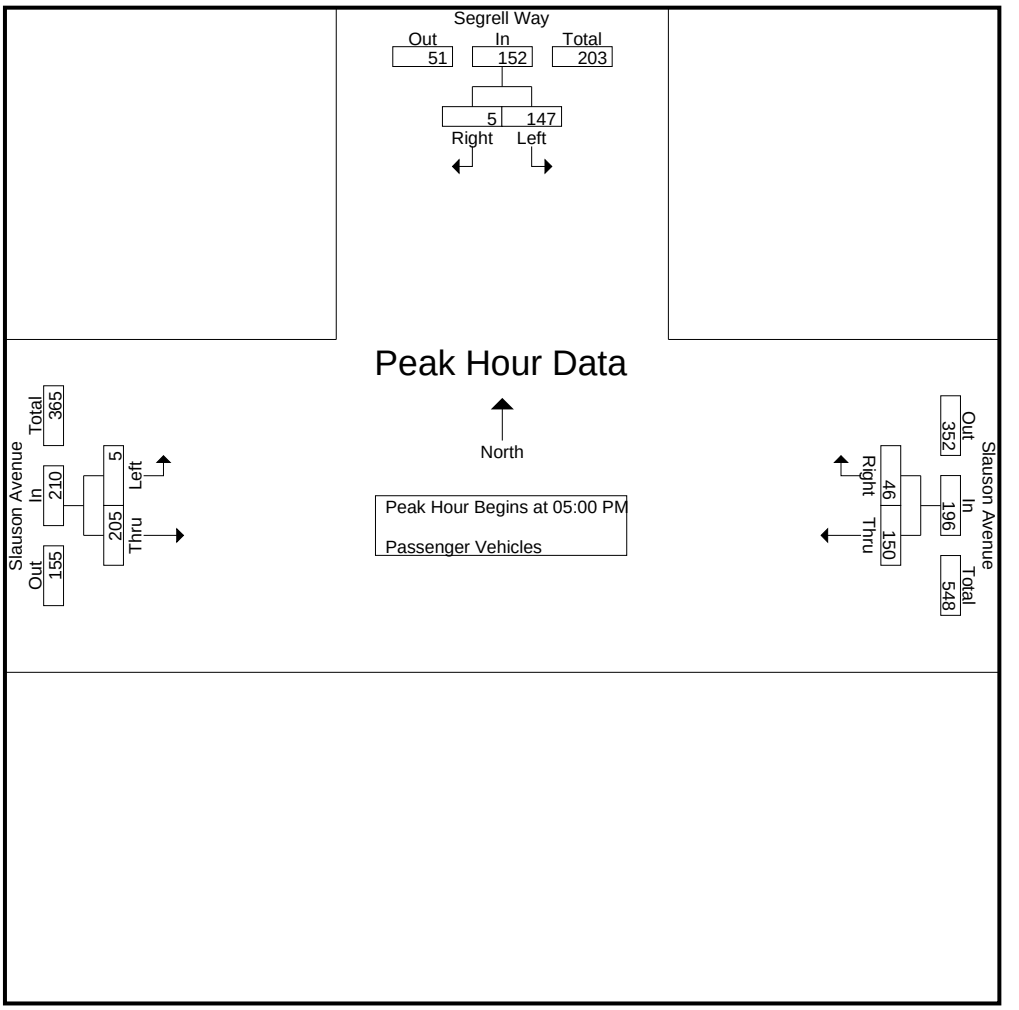

Peak Hour Analysis From 05:00 PM to 05:45 PM - Peak 1 of 1
Peak Hour for Each Approach Begins at:

	05:00 PM			05:00 PM			05:00 PM		
+0 mins.	35	**3**	38	39	11	**50**	1	42	43
+15 mins.	**41**	0	**41**	35	**15**	50	1	**61**	**62**
+30 mins.	33	2	35	**41**	9	50	**2**	60	62
+45 mins.	38	0	38	35	11	46	1	42	43
Total Volume	147	5	152	150	46	196	5	205	210
% App. Total	96.7	3.3		76.5	23.5		2.4	97.6	
PHF	.896	.417	.927	.915	.767	.980	.625	.840	.847

Counts Unlimited
PO Box 1178
Corona, CA 92878
(951) 268-6268

City of Culver City
N/S: Segrell Way
E/W: Slauson Avenue
Weather: Clear

File Name : CVC_Segrell_Slauson_PM
Site Code : 16619271
Start Date : 4/25/2019
Page No : 1

Groups Printed- Dual Wheeled Trucks

	Segrell Way Southbound			Slauson Avenue Westbound			Slauson Avenue Eastbound			
Start Time	Left	Right	App. Total	Thru	Right	App. Total	Left	Thru	App. Total	Int. Total
03:00 PM	0	1	1	1	0	1	0	1	1	3
03:15 PM	1	0	1	1	0	1	0	2	2	4
03:30 PM	0	0	0	0	0	0	0	1	1	1
03:45 PM	0	0	0	0	0	0	0	0	0	0
Total	1	1	2	2	0	2	0	4	4	8
04:00 PM	0	0	0	0	0	0	0	0	0	0
04:15 PM	0	0	0	0	0	0	0	0	0	0
04:30 PM	0	0	0	1	1	2	0	1	1	3
04:45 PM	0	0	0	0	0	0	0	0	0	0
Total	0	0	0	1	1	2	0	1	1	3
05:00 PM	0	0	0	0	0	0	0	0	0	0
05:15 PM	0	0	0	0	0	0	0	1	1	1
05:30 PM	0	0	0	0	0	0	0	0	0	0
05:45 PM	0	0	0	0	0	0	0	0	0	0
Total	0	0	0	0	0	0	0	1	1	1
Grand Total	1	1	2	3	1	4	0	6	6	12
Apprch %	50	50		75	25		0	100		
Total %	8.3	8.3	16.7	25	8.3	33.3	0	50	50	

	Segrell Way Southbound			Slauson Avenue Westbound			Slauson Avenue Eastbound			
Start Time	Left	Right	App. Total	Thru	Right	App. Total	Left	Thru	App. Total	Int. Total
Peak Hour Analysis From 05:00 PM to 05:45 PM - Peak 1 of 1										
Peak Hour for Entire Intersection Begins at 05:00 PM										
05:00 PM	0	0	0	0	0	0	0	0	0	0
05:15 PM	0	0	0	0	0	0	0	**1**	**1**	**1**
05:30 PM	0	0	0	0	0	0	0	0	0	0
05:45 PM	0	0	0	0	0	0	0	0	0	0
Total Volume	0	0	0	0	0	0	0	1	1	1
% App. Total	0	0		0	0		0	100		
PHF	.000	.000	.000	.000	.000	.000	.000	.250	.250	.250

Counts Unlimited
PO Box 1178
Corona, CA 92878
(951) 268-6268

City of Culver City
N/S: Segrell Way
E/W: Slauson Avenue
Weather: Clear

File Name : CVC_Segrell_Slauson_PM
Site Code : 16619271
Start Date : 4/25/2019
Page No : 2

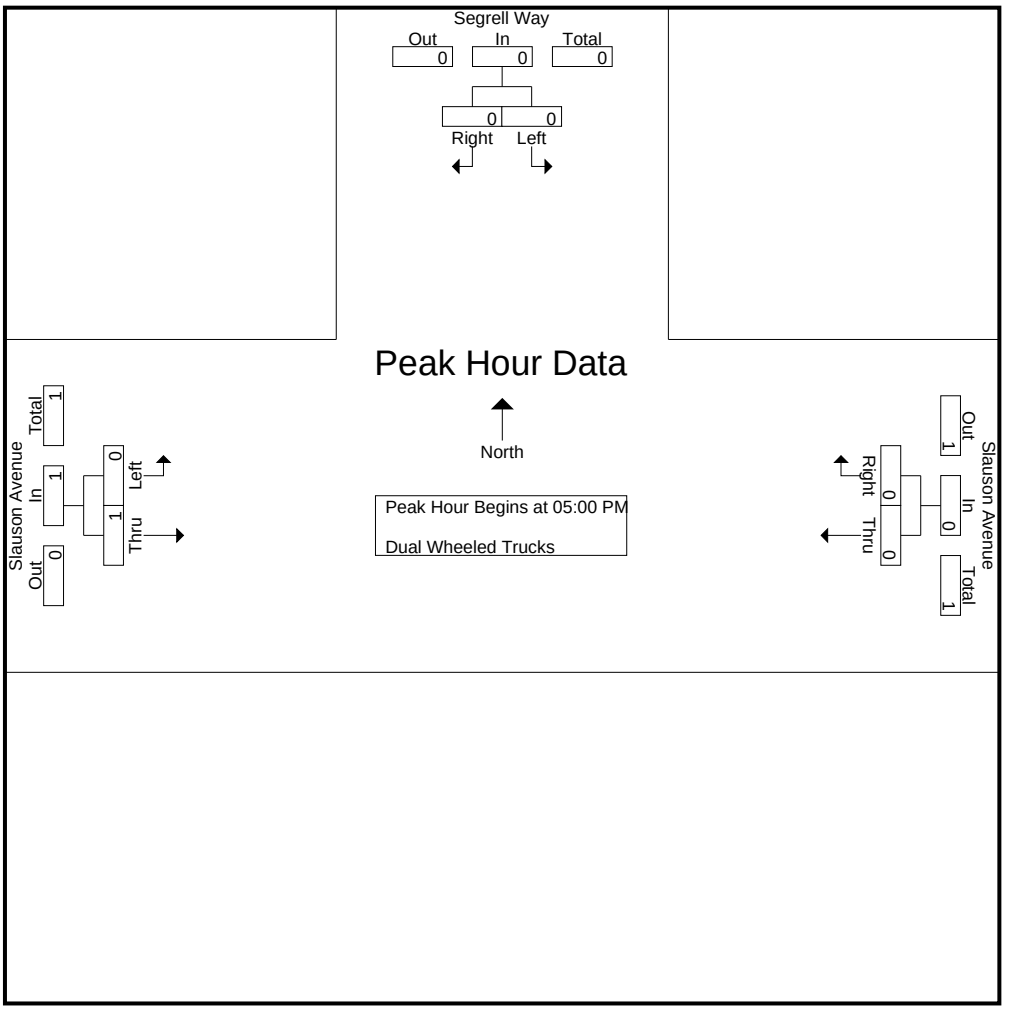

Peak Hour Analysis From 05:00 PM to 05:45 PM - Peak 1 of 1
Peak Hour for Each Approach Begins at:

	05:00 PM			05:00 PM			05:00 PM		
+0 mins.	0	0	0	0	0	0	0	0	0
+15 mins.	0	0	0	0	0	0	0	**1**	**1**
+30 mins.	0	0	0	0	0	0	0	0	0
+45 mins.	0	0	0	0	0	0	0	0	0
Total Volume	0	0	0	0	0	0	0	1	1
% App. Total	0	0		0	0		0	100	
PHF	.000	.000	.000	.000	.000	.000	.000	.250	.250

Counts Unlimited
PO Box 1178
Corona, CA 92878
(951) 268-6268

City of Culver City
N/S: Segrell Way
E/W: Slauson Avenue
Weather: Clear

File Name : CVC_Segrell_Slauson_PM
Site Code : 16619271
Start Date : 4/25/2019
Page No : 1

Groups Printed- Buses

	Segrell Way Southbound			Slauson Avenue Westbound			Slauson Avenue Eastbound			
Start Time	Left	Right	App. Total	Thru	Right	App. Total	Left	Thru	App. Total	Int. Total
03:00 PM	0	0	0	0	0	0	0	0	0	0
03:15 PM	0	0	0	0	0	0	0	0	0	0
03:30 PM	0	0	0	0	0	0	0	0	0	0
03:45 PM	0	0	0	0	0	0	0	0	0	0
Total	0	0	0	0	0	0	0	0	0	0
04:00 PM	0	0	0	0	0	0	0	0	0	0
04:15 PM	0	0	0	0	0	0	0	0	0	0
04:30 PM	0	0	0	0	0	0	0	0	0	0
04:45 PM	0	0	0	0	0	0	0	0	0	0
Total	0	0	0	0	0	0	0	0	0	0
05:00 PM	0	0	0	0	0	0	0	0	0	0
05:15 PM	0	0	0	0	0	0	0	0	0	0
05:30 PM	0	0	0	0	0	0	0	0	0	0
05:45 PM	0	0	0	0	0	0	0	0	0	0
Total	0	0	0	0	0	0	0	0	0	0
Grand Total	0	0	0	0	0	0	0	0	0	0
Apprch %	0	0		0	0		0	0		
Total %										

	Segrell Way Southbound			Slauson Avenue Westbound			Slauson Avenue Eastbound			
Start Time	Left	Right	App. Total	Thru	Right	App. Total	Left	Thru	App. Total	Int. Total
Peak Hour Analysis From 05:00 PM to 05:45 PM - Peak 1 of 1										
Peak Hour for Entire Intersection Begins at 05:00 PM										
05:00 PM	0	0	0	0	0	0	0	0	0	0
05:15 PM	0	0	0	0	0	0	0	0	0	0
05:30 PM	0	0	0	0	0	0	0	0	0	0
05:45 PM	0	0	0	0	0	0	0	0	0	0
Total Volume	0	0	0	0	0	0	0	0	0	0
% App. Total	0	0		0	0		0	0		
PHF	.000	.000	.000	.000	.000	.000	.000	.000	.000	.000

Counts Unlimited
PO Box 1178
Corona, CA 92878
(951) 268-6268

City of Culver City
N/S: Segrell Way
E/W: Slauson Avenue
Weather: Clear

File Name : CVC_Segrell_Slauson_PM
Site Code : 16619271
Start Date : 4/25/2019
Page No : 2

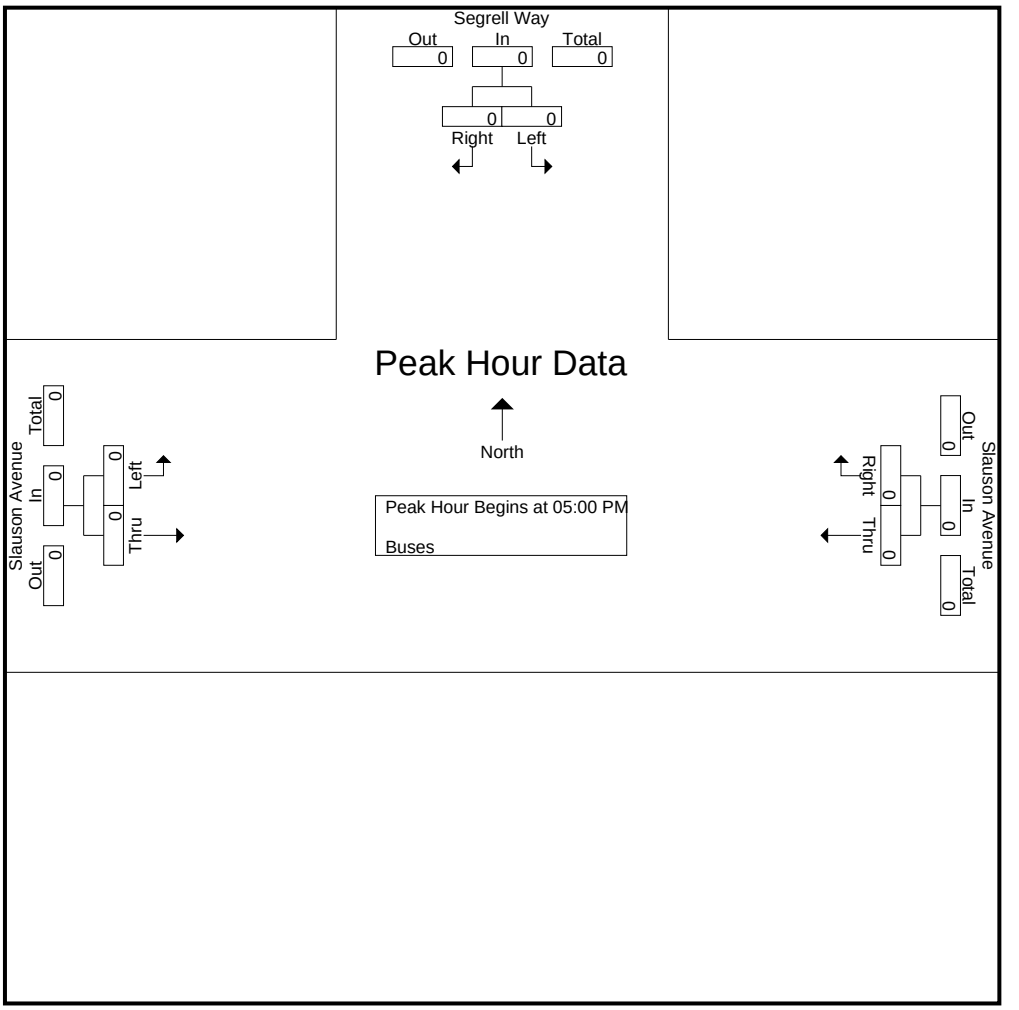

Peak Hour Analysis From 05:00 PM to 05:45 PM - Peak 1 of 1
Peak Hour for Each Approach Begins at:

	05:00 PM			05:00 PM			05:00 PM		
+0 mins.	0	0	0	0	0	0	0	0	0
+15 mins.	0	0	0	0	0	0	0	0	0
+30 mins.	0	0	0	0	0	0	0	0	0
+45 mins.	0	0	0	0	0	0	0	0	0
Total Volume	0	0	0	0	0	0	0	0	0
% App. Total	0	0		0	0		0	0	
PHF	.000	.000	.000	.000	.000	.000	.000	.000	.000

Location: Culver City
N/S: Segrell Way
E/W: Slauson Avenue

Date: 4/25/2019
Day: Thursday

PEDESTRIANS

	North Leg Segrell Way Pedestrians	East Leg Slauson Avenue Pedestrians	South Leg Segrell Way Pedestrians	West Leg Slauson Avenue Pedestrians	
7:00 AM	0	0	0	0	0
7:15 AM	4	0	0	0	4
7:30 AM	2	0	0	0	2
7:45 AM	0	0	0	1	1
8:00 AM	1	0	0	0	1
8:15 AM	3	0	0	0	3
8:30 AM	2	1	0	0	3
8:45 AM	3	0	0	0	3
9:00 AM	1	0	0	0	1
9:15 AM	0	0	0	0	0
9:30 AM	4	0	0	0	4
9:45 AM	3	0	0	0	3
TOTAL VOLUMES:	23	1	0	1	25

	North Leg Segrell Way Pedestrians	East Leg Slauson Avenue Pedestrians	South Leg Segrell Way Pedestrians	West Leg Slauson Avenue Pedestrians	
3:00 PM	1	0	0	0	1
3:15 PM	2	0	0	0	2
3:30 PM	1	0	0	0	1
3:45 PM	2	0	0	0	2
4:00 PM	1	0	0	0	1
4:15 PM	2	0	0	0	2
4:30 PM	4	0	0	0	4
4:45 PM	0	0	0	0	0
5:00 PM	0	0	0	1	1
5:15 PM	2	0	0	0	2
5:30 PM	0	0	0	0	0
5:45 PM	2	0	0	0	2
TOTAL VOLUMES:	17	0	0	1	18

Counts Unlimited, Inc.
PO Box 1178
Corona, CA 92878
951-268-6268

Location: Culver City
N/S: Segrell Way
E/W: Slauson Avenue

Date: 4/25/2019
Day: Thursday

BICYCLES

	Southbound Segrell Way			Westbound Slauson Avenue			Northbound Segrell Way			Eastbound Slauson Avenue			
	Left	Thru	Right	Left	Thru	Right	Left	Thru	Right	Left	Thru	Right	
7:00 AM	0	0	0	0	0	1	0	0	0	0	0	0	1
7:15 AM	0	0	0	0	0	0	0	0	0	0	1	0	1
7:30 AM	0	0	0	0	0	0	0	0	0	0	0	0	0
7:45 AM	0	0	0	0	0	0	0	0	0	0	1	0	1
8:00 AM	0	0	0	0	0	0	0	0	0	0	1	0	1
8:15 AM	0	0	0	0	1	0	0	0	0	0	1	0	2
8:30 AM	0	0	0	0	0	0	0	0	0	0	1	0	1
8:45 AM	0	0	0	0	1	0	0	0	0	0	1	0	2
9:00 AM	0	0	0	0	0	0	0	0	0	0	0	0	0
9:15 AM	0	0	0	0	0	0	0	0	0	0	0	0	0
9:30 AM	0	0	0	0	0	0	0	0	0	0	0	0	0
9:45 AM	0	0	0	0	1	0	0	0	0	0	0	0	1
TOTAL VOLUMES:	0	0	0	0	3	1	0	0	0	0	6	0	10

	Southbound Segrell Way			Westbound Slauson Avenue			Northbound Segrell Way			Eastbound Slauson Avenue			
	Left	Thru	Right	Left	Thru	Right	Left	Thru	Right	Left	Thru	Right	
3:00 PM	0	0	0	0	0	0	0	0	0	0	0	0	0
3:15 PM	0	0	0	0	0	0	0	0	0	0	0	0	0
3:30 PM	0	0	0	0	0	0	0	0	0	0	0	0	0
3:45 PM	0	0	0	0	0	0	0	0	0	0	0	0	0
4:00 PM	0	0	0	0	1	0	0	0	0	0	0	0	1
4:15 PM	1	0	0	0	0	0	0	0	0	1	0	0	2
4:30 PM	0	0	0	0	0	0	0	0	0	0	0	0	0
4:45 PM	0	0	0	0	1	0	0	0	0	0	0	0	1
5:00 PM	0	0	0	0	4	0	0	0	0	0	0	0	4
5:15 PM	0	0	0	0	1	0	0	0	0	0	0	0	1
5:30 PM	0	0	0	0	0	0	0	0	0	0	0	0	0
5:45 PM	0	0	0	0	1	0	0	0	0	0	1	0	2
TOTAL VOLUMES:	1	0	0	0	8	0	0	0	0	1	1	0	11

Counts Unlimited, Inc.
PO Box 1178
Corona, CA 92878
951-268-6268

Counts Unlimited
PO Box 1178
Corona, CA 92878
(951) 268-6268

City of Culver City
N/S: Culver Park Drive
E/W: Slauson Avenue
Weather: Clear

File Name : CVC_Culver Park_Slauson_AM
Site Code : 16619271
Start Date : 4/25/2019

Groups Printed- Passenger Vehicles - Dual Wheeled Trucks - Buses

	Culver Park Drive Southbound			Slauson Avenue Westbound			Slauson Avenue Eastbound			
Start Time	Left	Right	App. Total	Thru	Right	App. Total	Left	Thru	App. Total	Int. Total
07:00 AM	6	0	6	28	15	43	0	15	15	64
07:15 AM	4	0	4	24	12	36	0	23	23	63
07:30 AM	9	1	10	24	11	35	1	21	22	67
07:45 AM	3	2	5	39	19	58	1	25	26	89
Total	22	3	25	115	57	172	2	84	86	283
08:00 AM	17	6	23	45	21	66	0	22	22	111
08:15 AM	9	2	11	48	37	85	3	21	24	120
08:30 AM	15	5	20	38	63	101	4	45	49	170
08:45 AM	43	4	47	28	7	35	2	37	39	121
Total	84	17	101	159	128	287	9	125	134	522
09:00 AM	6	2	8	25	9	34	0	15	15	57
09:15 AM	4	0	4	23	5	28	0	10	10	42
09:30 AM	8	1	9	19	4	23	0	10	10	42
09:45 AM	4	0	4	23	5	28	1	19	20	52
Total	22	3	25	90	23	113	1	54	55	193
Grand Total	128	23	151	364	208	572	12	263	275	998
Apprch %	84.8	15.2		63.6	36.4		4.4	95.6		
Total %	12.8	2.3	15.1	36.5	20.8	57.3	1.2	26.4	27.6	
Passenger Vehicles	128	23	151	360	208	568	12	262	274	993
% Passenger Vehicles	100	100	100	98.9	100	99.3	100	99.6	99.6	99.5
Dual Wheeled Trucks	0	0	0	4	0	4	0	1	1	5
% Dual Wheeled Trucks										
Buses	0	0	0	0	0	0	0	0	0	0
% Buses	0	0	0	0	0	0	0	0	0	0

	Culver Park Drive Southbound			Slauson Avenue Westbound			Slauson Avenue Eastbound			
Start Time	Left	Right	App. Total	Thru	Right	App. Total	Left	Thru	App. Total	Int. Total
Peak Hour Analysis From 07:00 AM to 09:45 AM - Peak 1 of 1										
Peak Hour for Entire Intersection Begins at 08:00 AM										
08:00 AM	17	**6**	23	45	21	66	0	22	22	111
08:15 AM	9	2	11	**48**	37	85	3	21	24	120
08:30 AM	15	5	20	38	**63**	**101**	**4**	**45**	**49**	**170**
08:45 AM	**43**	4	**47**	28	7	35	2	37	39	121
Total Volume	84	17	101	159	128	287	9	125	134	522
% App. Total	83.2	16.8		55.4	44.6		6.7	93.3		
PHF	.488	.708	.537	.828	.508	.710	.563	.694	.684	.768

Counts Unlimited
PO Box 1178
Corona, CA 92878
(951) 268-6268

City of Culver City
N/S: Culver Park Drive
E/W: Slauson Avenue
Weather: Clear

File Name : CVC_Culver Park_Slauson_AM
Site Code : 16619271
Start Date : 4/25/2019
Page No : 2

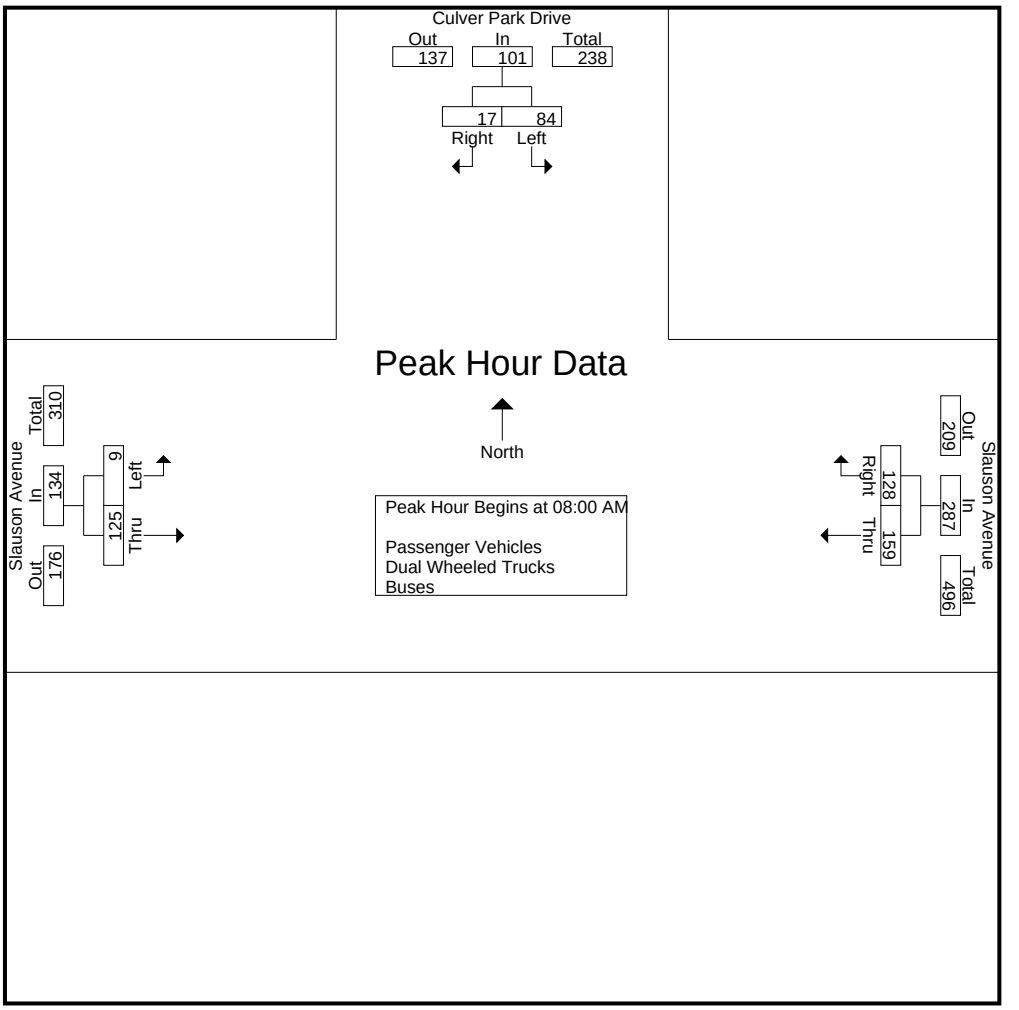

Peak Hour Analysis From 07:00 AM to 09:45 AM - Peak 1 of 1
Peak Hour for Each Approach Begins at:

	08:00 AM			07:45 AM			08:00 AM		
+0 mins.	17	**6**	23	39	19	58	0	22	22
+15 mins.	9	2	11	45	21	66	3	21	24
+30 mins.	15	5	20	**48**	37	85	**4**	**45**	**49**
+45 mins.	**43**	4	**47**	38	**63**	**101**	2	37	39
Total Volume	84	17	101	170	140	310	9	125	134
% App. Total	83.2	16.8		54.8	45.2		6.7	93.3	
PHF	.488	.708	.537	.885	.556	.767	.563	.694	.684

Counts Unlimited
PO Box 1178
Corona, CA 92878
(951) 268-6268

City of Culver City
N/S: Culver Park Drive
E/W: Slauson Avenue
Weather: Clear

File Name : CVC_Culver Park_Slauson_AM
Site Code : 16619271
Start Date : 4/25/2019
Page No : 1

Groups Printed- Passenger Vehicles

	Culver Park Drive Southbound			Slauson Avenue Westbound			Slauson Avenue Eastbound			
Start Time	Left	Right	App. Total	Thru	Right	App. Total	Left	Thru	App. Total	Int. Total
07:00 AM	6	0	6	28	15	43	0	15	15	64
07:15 AM	4	0	4	23	12	35	0	23	23	62
07:30 AM	9	1	10	23	11	34	1	20	21	65
07:45 AM	3	2	5	39	19	58	1	25	26	89
Total	22	3	25	113	57	170	2	83	85	280
08:00 AM	17	6	23	45	21	66	0	22	22	111
08:15 AM	9	2	11	48	37	85	3	21	24	120
08:30 AM	15	5	20	38	63	101	4	45	49	170
08:45 AM	43	4	47	28	7	35	2	37	39	121
Total	84	17	101	159	128	287	9	125	134	522
09:00 AM	6	2	8	25	9	34	0	15	15	57
09:15 AM	4	0	4	22	5	27	0	10	10	41
09:30 AM	8	1	9	18	4	22	0	10	10	41
09:45 AM	4	0	4	23	5	28	1	19	20	52
Total	22	3	25	88	23	111	1	54	55	191
Grand Total	128	23	151	360	208	568	12	262	274	993
Apprch %	84.8	15.2		63.4	36.6		4.4	95.6		
Total %	12.9	2.3	15.2	36.3	20.9	57.2	1.2	26.4	27.6	

	Culver Park Drive Southbound			Slauson Avenue Westbound			Slauson Avenue Eastbound			
Start Time	Left	Right	App. Total	Thru	Right	App. Total	Left	Thru	App. Total	Int. Total
Peak Hour Analysis From 08:00 AM to 08:45 AM - Peak 1 of 1										
Peak Hour for Entire Intersection Begins at 08:00 AM										
08:00 AM	17	**6**	23	45	21	66	0	22	22	111
08:15 AM	9	2	11	**48**	37	85	3	21	24	120
08:30 AM	15	5	20	38	**63**	**101**	**4**	**45**	**49**	**170**
08:45 AM	**43**	4	**47**	28	7	35	2	37	39	121
Total Volume	84	17	101	159	128	287	9	125	134	522
% App. Total	83.2	16.8		55.4	44.6		6.7	93.3		
PHF	.488	.708	.537	.828	.508	.710	.563	.694	.684	.768

Counts Unlimited
PO Box 1178
Corona, CA 92878
(951) 268-6268

City of Culver City
N/S: Culver Park Drive
E/W: Slauson Avenue
Weather: Clear

File Name : CVC_Culver Park_Slauson_AM
Site Code : 16619271
Start Date : 4/25/2019
Page No : 2

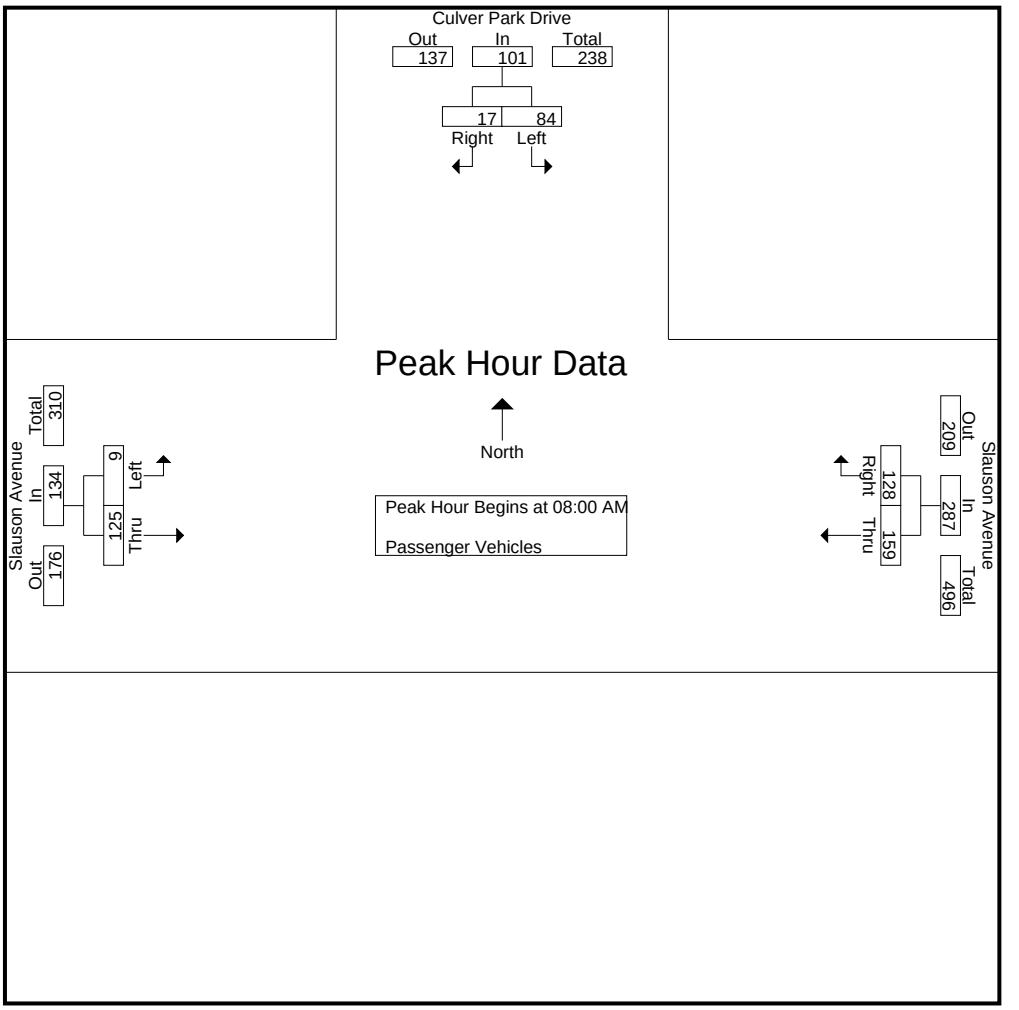

Peak Hour Analysis From 08:00 AM to 08:45 AM - Peak 1 of 1
Peak Hour for Each Approach Begins at:

	08:00 AM			08:00 AM			08:00 AM		
+0 mins.	17	**6**	23	45	21	66	0	22	22
+15 mins.	9	2	11	**48**	37	85	3	21	24
+30 mins.	15	5	20	38	**63**	**101**	**4**	**45**	**49**
+45 mins.	**43**	4	**47**	28	7	35	2	37	39
Total Volume	84	17	101	159	128	287	9	125	134
% App. Total	83.2	16.8		55.4	44.6		6.7	93.3	
PHF	.488	.708	.537	.828	.508	.710	.563	.694	.684

Counts Unlimited
PO Box 1178
Corona, CA 92878
(951) 268-6268

City of Culver City
N/S: Culver Park Drive
E/W: Slauson Avenue
Weather: Clear

File Name : CVC_Culver Park_Slauson_AM
Site Code : 16619271
Start Date : 4/25/2019
Page No : 1

Groups Printed- Dual Wheeled Trucks

	Culver Park Drive Southbound			Slauson Avenue Westbound			Slauson Avenue Eastbound			
Start Time	Left	Right	App. Total	Thru	Right	App. Total	Left	Thru	App. Total	Int. Total
07:00 AM	0	0	0	0	0	0	0	0	0	0
07:15 AM	0	0	0	1	0	1	0	0	0	1
07:30 AM	0	0	0	1	0	1	0	1	1	2
07:45 AM	0	0	0	0	0	0	0	0	0	0
Total	0	0	0	2	0	2	0	1	1	3
08:00 AM	0	0	0	0	0	0	0	0	0	0
08:15 AM	0	0	0	0	0	0	0	0	0	0
08:30 AM	0	0	0	0	0	0	0	0	0	0
08:45 AM	0	0	0	0	0	0	0	0	0	0
Total	0	0	0	0	0	0	0	0	0	0
09:00 AM	0	0	0	0	0	0	0	0	0	0
09:15 AM	0	0	0	1	0	1	0	0	0	1
09:30 AM	0	0	0	1	0	1	0	0	0	1
09:45 AM	0	0	0	0	0	0	0	0	0	0
Total	0	0	0	2	0	2	0	0	0	2
Grand Total	0	0	0	4	0	4	0	1	1	5
Apprch %	0	0		100	0		0	100		
Total %	0	0	0	80	0	80	0	20	20	

	Culver Park Drive Southbound			Slauson Avenue Westbound			Slauson Avenue Eastbound			
Start Time	Left	Right	App. Total	Thru	Right	App. Total	Left	Thru	App. Total	Int. Total
Peak Hour Analysis From 08:00 AM to 08:45 AM - Peak 1 of 1										
Peak Hour for Entire Intersection Begins at 08:00 AM										
08:00 AM	0	0	0	0	0	0	0	0	0	0
08:15 AM	0	0	0	0	0	0	0	0	0	0
08:30 AM	0	0	0	0	0	0	0	0	0	0
08:45 AM	0	0	0	0	0	0	0	0	0	0
Total Volume	0	0	0	0	0	0	0	0	0	0
% App. Total	0	0		0	0		0	0		
PHF	.000	.000	.000	.000	.000	.000	.000	.000	.000	.000

Counts Unlimited
PO Box 1178
Corona, CA 92878
(951) 268-6268

City of Culver City
N/S: Culver Park Drive
E/W: Slauson Avenue
Weather: Clear

File Name : CVC_Culver Park_Slauson_AM
Site Code : 16619271
Start Date : 4/25/2019
Page No : 2

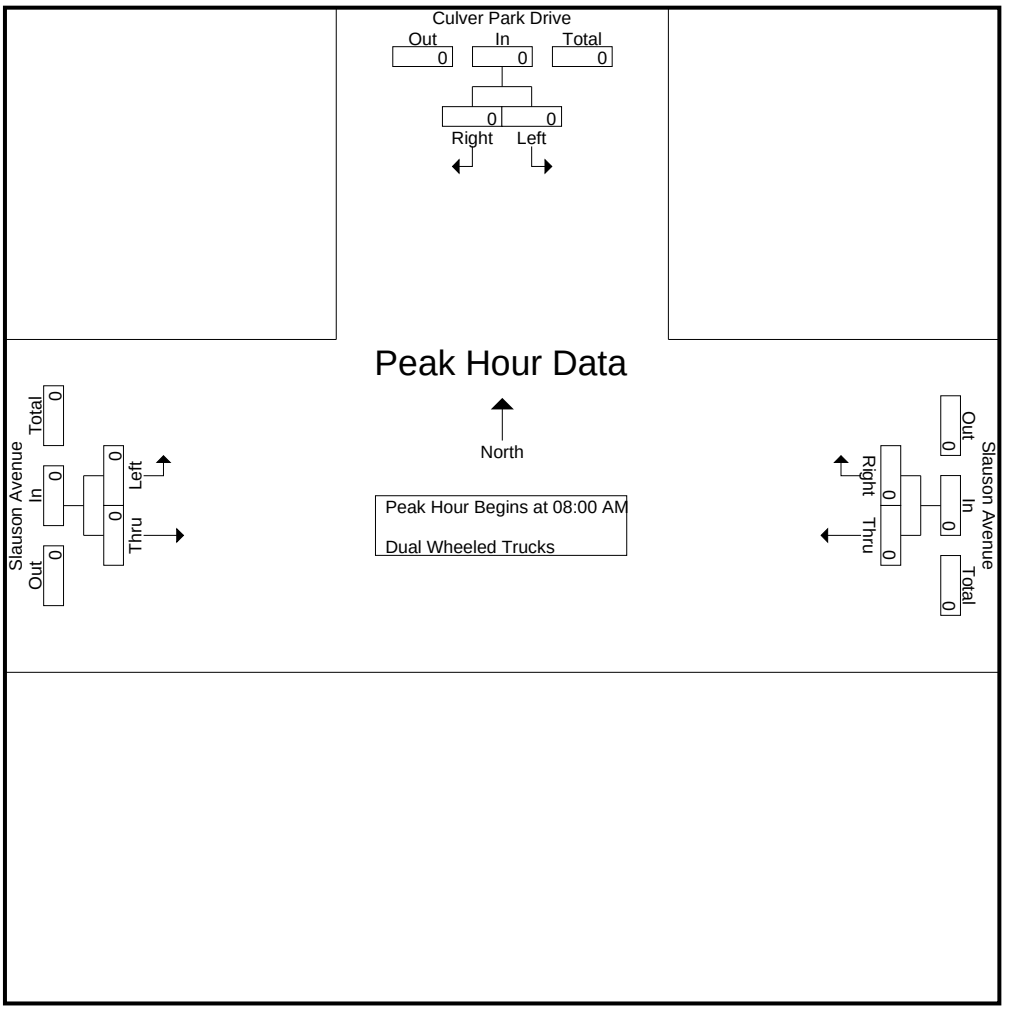

Peak Hour Analysis From 08:00 AM to 08:45 AM - Peak 1 of 1
Peak Hour for Each Approach Begins at:

	08:00 AM			08:00 AM			08:00 AM		
+0 mins.	0	0	0	0	0	0	0	0	0
+15 mins.	0	0	0	0	0	0	0	0	0
+30 mins.	0	0	0	0	0	0	0	0	0
+45 mins.	0	0	0	0	0	0	0	0	0
Total Volume	0	0	0	0	0	0	0	0	0
% App. Total	0	0		0	0		0	0	
PHF	.000	.000	.000	.000	.000	.000	.000	.000	.000

Counts Unlimited
PO Box 1178
Corona, CA 92878
(951) 268-6268

City of Culver City
N/S: Culver Park Drive
E/W: Slauson Avenue
Weather: Clear

File Name : CVC_Culver Park_Slauson_AM
Site Code : 16619271
Start Date : 4/25/2019

Groups Printed- Buses

	Culver Park Drive Southbound			Slauson Avenue Westbound			Slauson Avenue Eastbound			
Start Time	Left	Right	App. Total	Thru	Right	App. Total	Left	Thru	App. Total	Int. Total
07:00 AM	0	0	0	0	0	0	0	0	0	0
07:15 AM	0	0	0	0	0	0	0	0	0	0
07:30 AM	0	0	0	0	0	0	0	0	0	0
07:45 AM	0	0	0	0	0	0	0	0	0	0
Total	0	0	0	0	0	0	0	0	0	0
08:00 AM	0	0	0	0	0	0	0	0	0	0
08:15 AM	0	0	0	0	0	0	0	0	0	0
08:30 AM	0	0	0	0	0	0	0	0	0	0
08:45 AM	0	0	0	0	0	0	0	0	0	0
Total	0	0	0	0	0	0	0	0	0	0
09:00 AM	0	0	0	0	0	0	0	0	0	0
09:15 AM	0	0	0	0	0	0	0	0	0	0
09:30 AM	0	0	0	0	0	0	0	0	0	0
09:45 AM	0	0	0	0	0	0	0	0	0	0
Total	0	0	0	0	0	0	0	0	0	0
Grand Total	0	0	0	0	0	0	0	0	0	0
Apprch %	0	0		0	0		0	0		
Total %										

	Culver Park Drive Southbound			Slauson Avenue Westbound			Slauson Avenue Eastbound			
Start Time	Left	Right	App. Total	Thru	Right	App. Total	Left	Thru	App. Total	Int. Total
Peak Hour Analysis From 08:00 AM to 08:45 AM - Peak 1 of 1										
Peak Hour for Entire Intersection Begins at 08:00 AM										
08:00 AM	0	0	0	0	0	0	0	0	0	0
08:15 AM	0	0	0	0	0	0	0	0	0	0
08:30 AM	0	0	0	0	0	0	0	0	0	0
08:45 AM	0	0	0	0	0	0	0	0	0	0
Total Volume	0	0	0	0	0	0	0	0	0	0
% App. Total	0	0		0	0		0	0		
PHF	.000	.000	.000	.000	.000	.000	.000	.000	.000	.000

Counts Unlimited
PO Box 1178
Corona, CA 92878
(951) 268-6268

City of Culver City
N/S: Culver Park Drive
E/W: Slauson Avenue
Weather: Clear

File Name : CVC_Culver Park_Slauson_AM
Site Code : 16619271
Start Date : 4/25/2019
Page No : 2

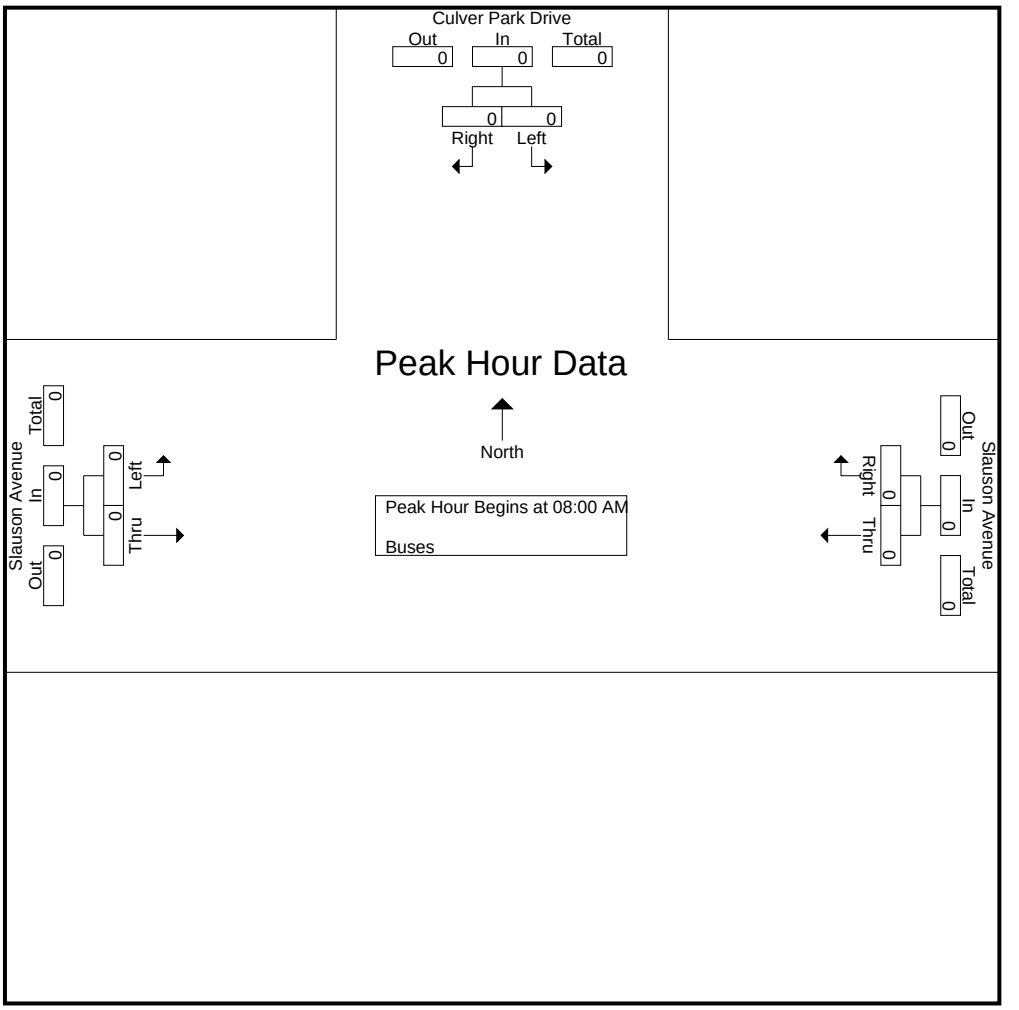

Peak Hour Analysis From 08:00 AM to 08:45 AM - Peak 1 of 1
Peak Hour for Each Approach Begins at:

	08:00 AM			08:00 AM			08:00 AM		
+0 mins.	0	0	0	0	0	0	0	0	0
+15 mins.	0	0	0	0	0	0	0	0	0
+30 mins.	0	0	0	0	0	0	0	0	0
+45 mins.	0	0	0	0	0	0	0	0	0
Total Volume	0	0	0	0	0	0	0	0	0
% App. Total	0	0		0	0		0	0	
PHF	.000	.000	.000	.000	.000	.000	.000	.000	.000

Counts Unlimited
PO Box 1178
Corona, CA 92878
(951) 268-6268

City of Culver City
N/S: Culver Park Drive
E/W: Slauson Avenue
Weather: Clear

File Name : CVC_Culver Park_Slauson_PM
Site Code : 16619271
Start Date : 4/25/2019

Groups Printed- Passenger Vehicles - Dual Wheeled Trucks - Buses

	Culver Park Drive Southbound			Slauson Avenue Westbound			Slauson Avenue Eastbound			
Start Time	Left	Right	App. Total	Thru	Right	App. Total	Left	Thru	App. Total	Int. Total
03:00 PM	7	1	8	31	25	56	0	14	14	78
03:15 PM	30	1	31	27	17	44	1	45	46	121
03:30 PM	22	1	23	28	5	33	1	34	35	91
03:45 PM	15	1	16	31	7	38	0	31	31	85
Total	74	4	78	117	54	171	2	124	126	375
04:00 PM	13	1	14	28	16	44	1	20	21	79
04:15 PM	6	1	7	26	10	36	1	34	35	78
04:30 PM	17	3	20	23	13	36	1	43	44	100
04:45 PM	18	2	20	14	19	33	1	20	21	74
Total	54	7	61	91	58	149	4	117	121	331
05:00 PM	18	3	21	38	9	47	1	22	23	91
05:15 PM	10	1	11	29	8	37	0	51	51	99
05:30 PM	8	0	8	23	18	41	1	53	54	103
05:45 PM	12	3	15	28	7	35	4	33	37	87
Total	48	7	55	118	42	160	6	159	165	380
Grand Total	176	18	194	326	154	480	12	400	412	1086
Apprch %	90.7	9.3		67.9	32.1		2.9	97.1		
Total %	16.2	1.7	17.9	30	14.2	44.2	1.1	36.8	37.9	
Passenger Vehicles	173	18	191	324	154	478	12	395	407	1076
% Passenger Vehicles	98.3	100	98.5	99.4	100	99.6	100	98.8	98.8	99.1
Dual Wheeled Trucks	3	0	3	2	0	2	0	5	5	10
% Dual Wheeled Trucks										
Buses	0	0	0	0	0	0	0	0	0	0
% Buses	0	0	0	0	0	0	0	0	0	0

	Culver Park Drive Southbound			Slauson Avenue Westbound			Slauson Avenue Eastbound			
Start Time	Left	Right	App. Total	Thru	Right	App. Total	Left	Thru	App. Total	Int. Total
Peak Hour Analysis From 03:00 PM to 05:45 PM - Peak 1 of 1										
Peak Hour for Entire Intersection Begins at 05:00 PM										
05:00 PM	**18**	**3**	**21**	**38**	9	**47**	1	22	23	91
05:15 PM	10	1	11	29	8	37	0	51	51	99
05:30 PM	8	0	8	23	**18**	41	1	**53**	**54**	**103**
05:45 PM	12	3	15	28	7	35	**4**	33	37	87
Total Volume	48	7	55	118	42	160	6	159	165	380
% App. Total	87.3	12.7		73.8	26.2		3.6	96.4		
PHF	.667	.583	.655	.776	.583	.851	.375	.750	.764	.922

Counts Unlimited
PO Box 1178
Corona, CA 92878
(951) 268-6268

City of Culver City
N/S: Culver Park Drive
E/W: Slauson Avenue
Weather: Clear

File Name : CVC_Culver Park_Slauson_PM
Site Code : 16619271
Start Date : 4/25/2019
Page No : 2

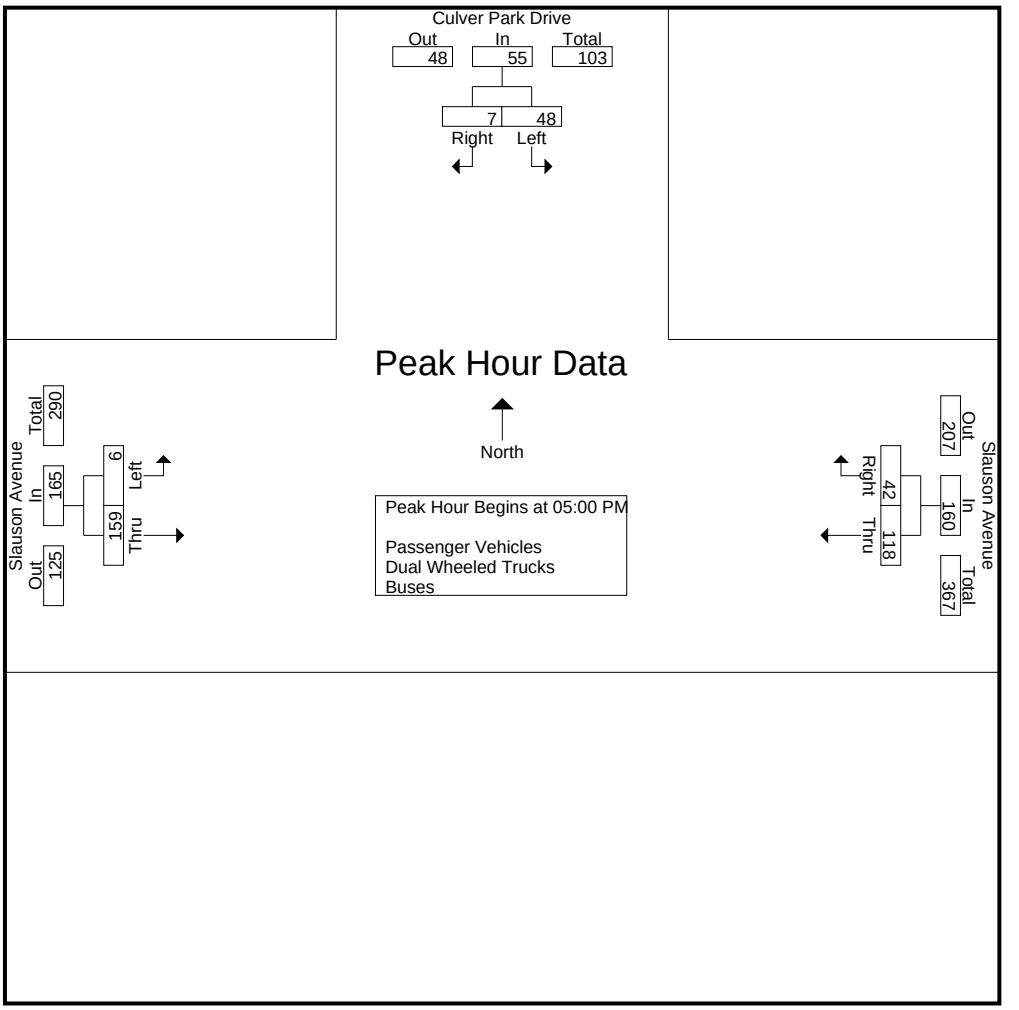

Peak Hour Analysis From 03:00 PM to 05:45 PM - Peak 1 of 1
Peak Hour for Each Approach Begins at:

	03:15 PM			03:00 PM			05:00 PM		
+0 mins.	**30**	**1**	**31**	**31**	**25**	**56**	1	22	23
+15 mins.	22	1	23	27	17	44	0	51	51
+30 mins.	15	1	16	28	5	33	1	**53**	**54**
+45 mins.	13	1	14	31	7	38	**4**	33	37
Total Volume	80	4	84	117	54	171	6	159	165
% App. Total	95.2	4.8		68.4	31.6		3.6	96.4	
PHF	.667	1.000	.677	.944	.540	.763	.375	.750	.764

Counts Unlimited
PO Box 1178
Corona, CA 92878
(951) 268-6268

City of Culver City
N/S: Culver Park Drive
E/W: Slauson Avenue
Weather: Clear

File Name : CVC_Culver Park_Slauson_PM
Site Code : 16619271
Start Date : 4/25/2019

Groups Printed- Passenger Vehicles

	Culver Park Drive Southbound			Slauson Avenue Westbound			Slauson Avenue Eastbound			
Start Time	Left	Right	App. Total	Thru	Right	App. Total	Left	Thru	App. Total	Int. Total
03:00 PM	7	1	8	30	25	55	0	14	14	77
03:15 PM	28	1	29	27	17	44	1	45	46	119
03:30 PM	22	1	23	27	5	32	1	32	33	88
03:45 PM	14	1	15	31	7	38	0	30	30	83
Total	71	4	75	115	54	169	2	121	123	367
04:00 PM	13	1	14	28	16	44	1	20	21	79
04:15 PM	6	1	7	26	10	36	1	34	35	78
04:30 PM	17	3	20	23	13	36	1	42	43	99
04:45 PM	18	2	20	14	19	33	1	20	21	74
Total	54	7	61	91	58	149	4	116	120	330
05:00 PM	18	3	21	38	9	47	1	22	23	91
05:15 PM	10	1	11	29	8	37	0	50	50	98
05:30 PM	8	0	8	23	18	41	1	53	54	103
05:45 PM	12	3	15	28	7	35	4	33	37	87
Total	48	7	55	118	42	160	6	158	164	379
Grand Total	173	18	191	324	154	478	12	395	407	1076
Apprch %	90.6	9.4		67.8	32.2		2.9	97.1		
Total %	16.1	1.7	17.8	30.1	14.3	44.4	1.1	36.7	37.8	

	Culver Park Drive Southbound			Slauson Avenue Westbound			Slauson Avenue Eastbound			
Start Time	Left	Right	App. Total	Thru	Right	App. Total	Left	Thru	App. Total	Int. Total
Peak Hour Analysis From 05:00 PM to 05:45 PM - Peak 1 of 1										
Peak Hour for Entire Intersection Begins at 05:00 PM										
05:00 PM	**18**	**3**	**21**	**38**	9	**47**	1	22	23	91
05:15 PM	10	1	11	29	8	37	0	50	50	98
05:30 PM	8	0	8	23	**18**	41	1	**53**	**54**	**103**
05:45 PM	12	3	15	28	7	35	**4**	33	37	87
Total Volume	48	7	55	118	42	160	6	158	164	379
% App. Total	87.3	12.7		73.8	26.2		3.7	96.3		
PHF	.667	.583	.655	.776	.583	.851	.375	.745	.759	.920

Counts Unlimited
PO Box 1178
Corona, CA 92878
(951) 268-6268

City of Culver City
N/S: Culver Park Drive
E/W: Slauson Avenue
Weather: Clear

File Name : CVC_Culver Park_Slauson_PM
Site Code : 16619271
Start Date : 4/25/2019
Page No : 2

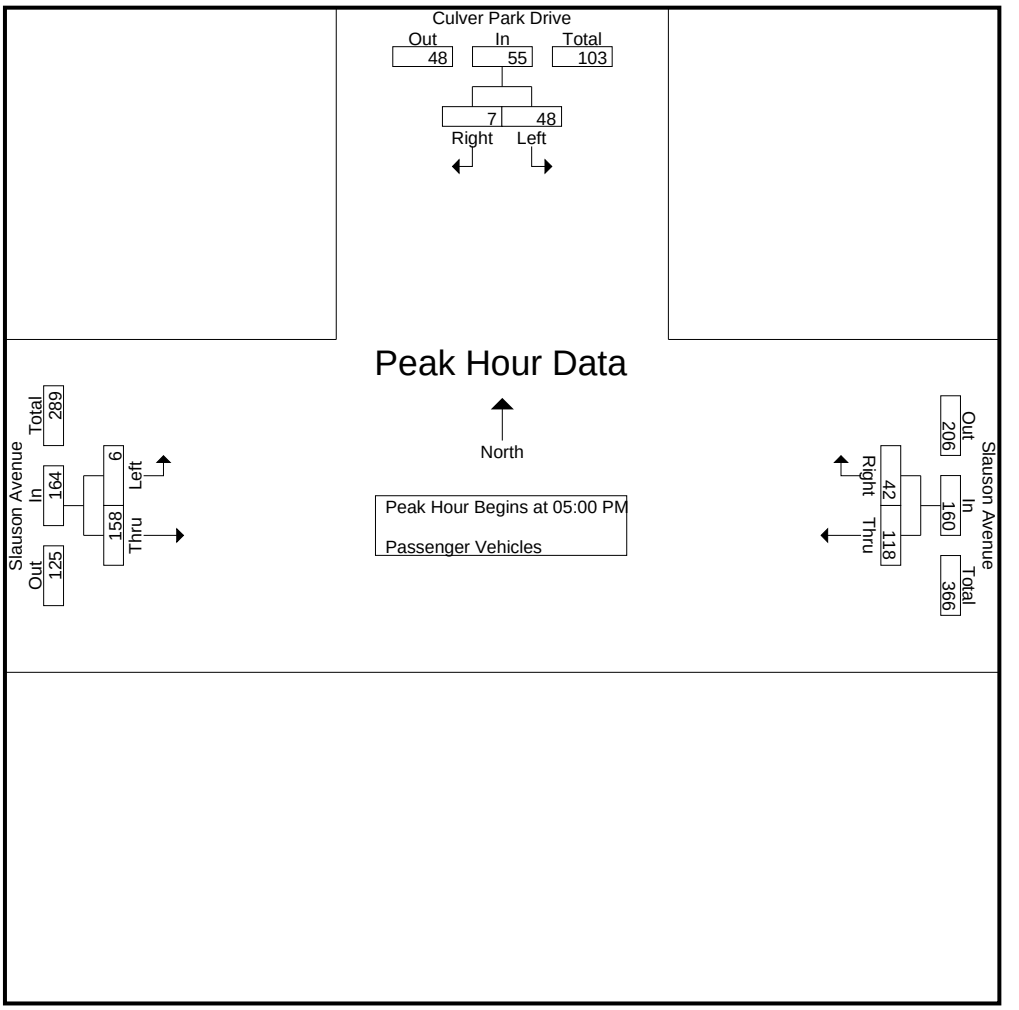

Peak Hour Analysis From 05:00 PM to 05:45 PM - Peak 1 of 1
Peak Hour for Each Approach Begins at:

	05:00 PM			05:00 PM			05:00 PM		
+0 mins.	**18**	**3**	**21**	**38**	9	**47**	1	22	23
+15 mins.	10	1	11	29	8	37	0	50	50
+30 mins.	8	0	8	23	**18**	41	1	**53**	**54**
+45 mins.	12	3	15	28	7	35	**4**	33	37
Total Volume	48	7	55	118	42	160	6	158	164
% App. Total	87.3	12.7		73.8	26.2		3.7	96.3	
PHF	.667	.583	.655	.776	.583	.851	.375	.745	.759

Counts Unlimited
PO Box 1178
Corona, CA 92878
(951) 268-6268

City of Culver City
N/S: Culver Park Drive
E/W: Slauson Avenue
Weather: Clear

File Name : CVC_Culver Park_Slauson_PM
Site Code : 16619271
Start Date : 4/25/2019

Groups Printed- Dual Wheeled Trucks

	Culver Park Drive Southbound			Slauson Avenue Westbound			Slauson Avenue Eastbound			
Start Time	Left	Right	App. Total	Thru	Right	App. Total	Left	Thru	App. Total	Int. Total
03:00 PM	0	0	0	1	0	1	0	0	0	1
03:15 PM	2	0	2	0	0	0	0	0	0	2
03:30 PM	0	0	0	1	0	1	0	2	2	3
03:45 PM	1	0	1	0	0	0	0	1	1	2
Total	3	0	3	2	0	2	0	3	3	8
04:00 PM	0	0	0	0	0	0	0	0	0	0
04:15 PM	0	0	0	0	0	0	0	0	0	0
04:30 PM	0	0	0	0	0	0	0	1	1	1
04:45 PM	0	0	0	0	0	0	0	0	0	0
Total	0	0	0	0	0	0	0	1	1	1
05:00 PM	0	0	0	0	0	0	0	0	0	0
05:15 PM	0	0	0	0	0	0	0	1	1	1
05:30 PM	0	0	0	0	0	0	0	0	0	0
05:45 PM	0	0	0	0	0	0	0	0	0	0
Total	0	0	0	0	0	0	0	1	1	1
Grand Total	3	0	3	2	0	2	0	5	5	10
Apprch %	100	0		100	0		0	100		
Total %	30	0	30	20	0	20	0	50	50	

	Culver Park Drive Southbound			Slauson Avenue Westbound			Slauson Avenue Eastbound			
Start Time	Left	Right	App. Total	Thru	Right	App. Total	Left	Thru	App. Total	Int. Total
Peak Hour Analysis From 05:00 PM to 05:45 PM - Peak 1 of 1										
Peak Hour for Entire Intersection Begins at 05:00 PM										
05:00 PM	0	0	0	0	0	0	0	0	0	0
05:15 PM	0	0	0	0	0	0	0	**1**	**1**	**1**
05:30 PM	0	0	0	0	0	0	0	0	0	0
05:45 PM	0	0	0	0	0	0	0	0	0	0
Total Volume	0	0	0	0	0	0	0	1	1	1
% App. Total	0	0		0	0		0	100		
PHF	.000	.000	.000	.000	.000	.000	.000	.250	.250	.250

Counts Unlimited
PO Box 1178
Corona, CA 92878
(951) 268-6268

City of Culver City
N/S: Culver Park Drive
E/W: Slauson Avenue
Weather: Clear

File Name : CVC_Culver Park_Slauson_PM
Site Code : 16619271
Start Date : 4/25/2019
Page No : 2

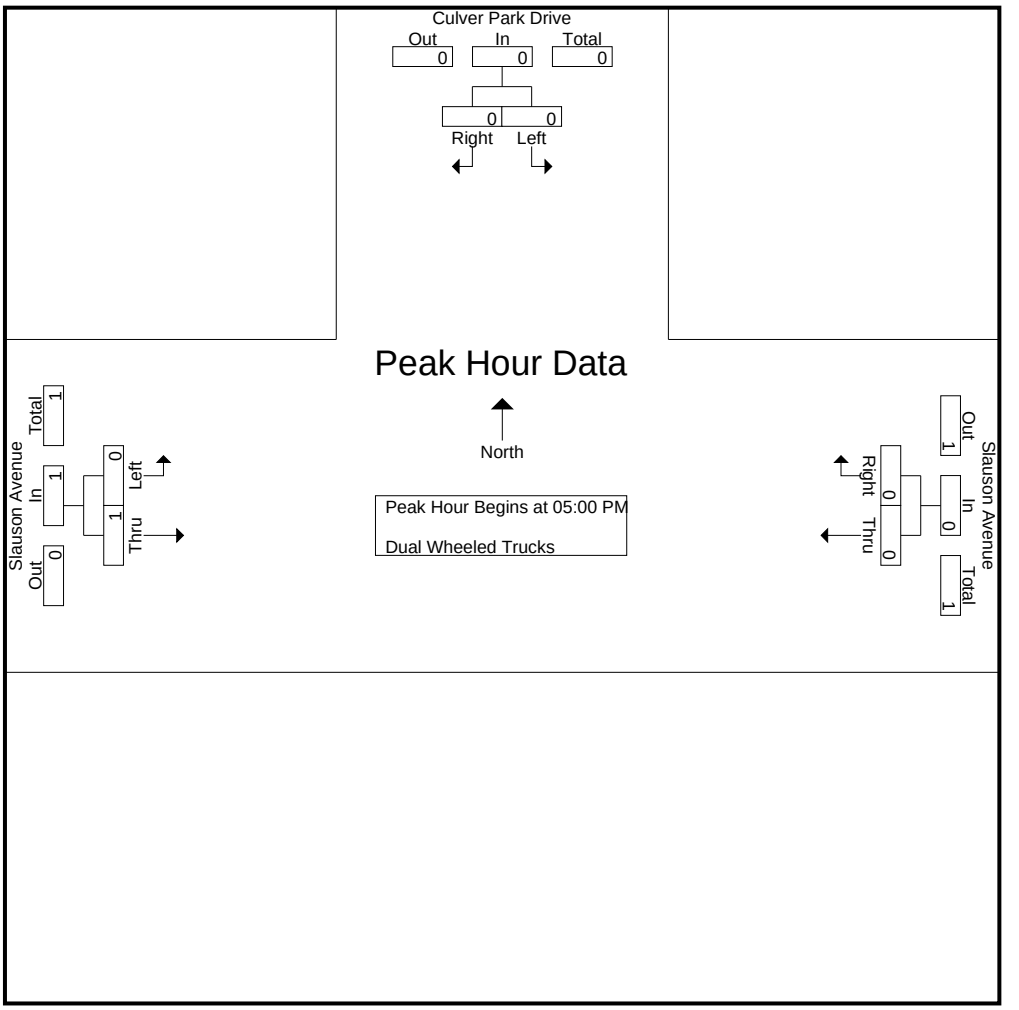

Peak Hour Analysis From 05:00 PM to 05:45 PM - Peak 1 of 1
Peak Hour for Each Approach Begins at:

	05:00 PM			05:00 PM			05:00 PM		
+0 mins.	0	0	0	0	0	0	0	0	0
+15 mins.	0	0	0	0	0	0	0	**1**	**1**
+30 mins.	0	0	0	0	0	0	0	0	0
+45 mins.	0	0	0	0	0	0	0	0	0
Total Volume	0	0	0	0	0	0	0	1	1
% App. Total	0	0		0	0		0	100	
PHF	.000	.000	.000	.000	.000	.000	.000	.250	.250

Counts Unlimited
PO Box 1178
Corona, CA 92878
(951) 268-6268

City of Culver City
N/S: Culver Park Drive
E/W: Slauson Avenue
Weather: Clear

File Name : CVC_Culver Park_Slauson_PM
Site Code : 16619271
Start Date : 4/25/2019
Page No : 1

Groups Printed- Buses

	Culver Park Drive Southbound			Slauson Avenue Westbound			Slauson Avenue Eastbound			
Start Time	Left	Right	App. Total	Thru	Right	App. Total	Left	Thru	App. Total	Int. Total
03:00 PM	0	0	0	0	0	0	0	0	0	0
03:15 PM	0	0	0	0	0	0	0	0	0	0
03:30 PM	0	0	0	0	0	0	0	0	0	0
03:45 PM	0	0	0	0	0	0	0	0	0	0
Total	0	0	0	0	0	0	0	0	0	0
04:00 PM	0	0	0	0	0	0	0	0	0	0
04:15 PM	0	0	0	0	0	0	0	0	0	0
04:30 PM	0	0	0	0	0	0	0	0	0	0
04:45 PM	0	0	0	0	0	0	0	0	0	0
Total	0	0	0	0	0	0	0	0	0	0
05:00 PM	0	0	0	0	0	0	0	0	0	0
05:15 PM	0	0	0	0	0	0	0	0	0	0
05:30 PM	0	0	0	0	0	0	0	0	0	0
05:45 PM	0	0	0	0	0	0	0	0	0	0
Total	0	0	0	0	0	0	0	0	0	0
Grand Total	0	0	0	0	0	0	0	0	0	0
Apprch %	0	0		0	0		0	0		
Total %										

	Culver Park Drive Southbound			Slauson Avenue Westbound			Slauson Avenue Eastbound			
Start Time	Left	Right	App. Total	Thru	Right	App. Total	Left	Thru	App. Total	Int. Total
Peak Hour Analysis From 05:00 PM to 05:45 PM - Peak 1 of 1										
Peak Hour for Entire Intersection Begins at 05:00 PM										
05:00 PM	0	0	0	0	0	0	0	0	0	0
05:15 PM	0	0	0	0	0	0	0	0	0	0
05:30 PM	0	0	0	0	0	0	0	0	0	0
05:45 PM	0	0	0	0	0	0	0	0	0	0
Total Volume	0	0	0	0	0	0	0	0	0	0
% App. Total	0	0		0	0		0	0		
PHF	.000	.000	.000	.000	.000	.000	.000	.000	.000	.000

Counts Unlimited
PO Box 1178
Corona, CA 92878
(951) 268-6268

City of Culver City
N/S: Culver Park Drive
E/W: Slauson Avenue
Weather: Clear

File Name : CVC_Culver Park_Slauson_PM
Site Code : 16619271
Start Date : 4/25/2019
Page No : 2

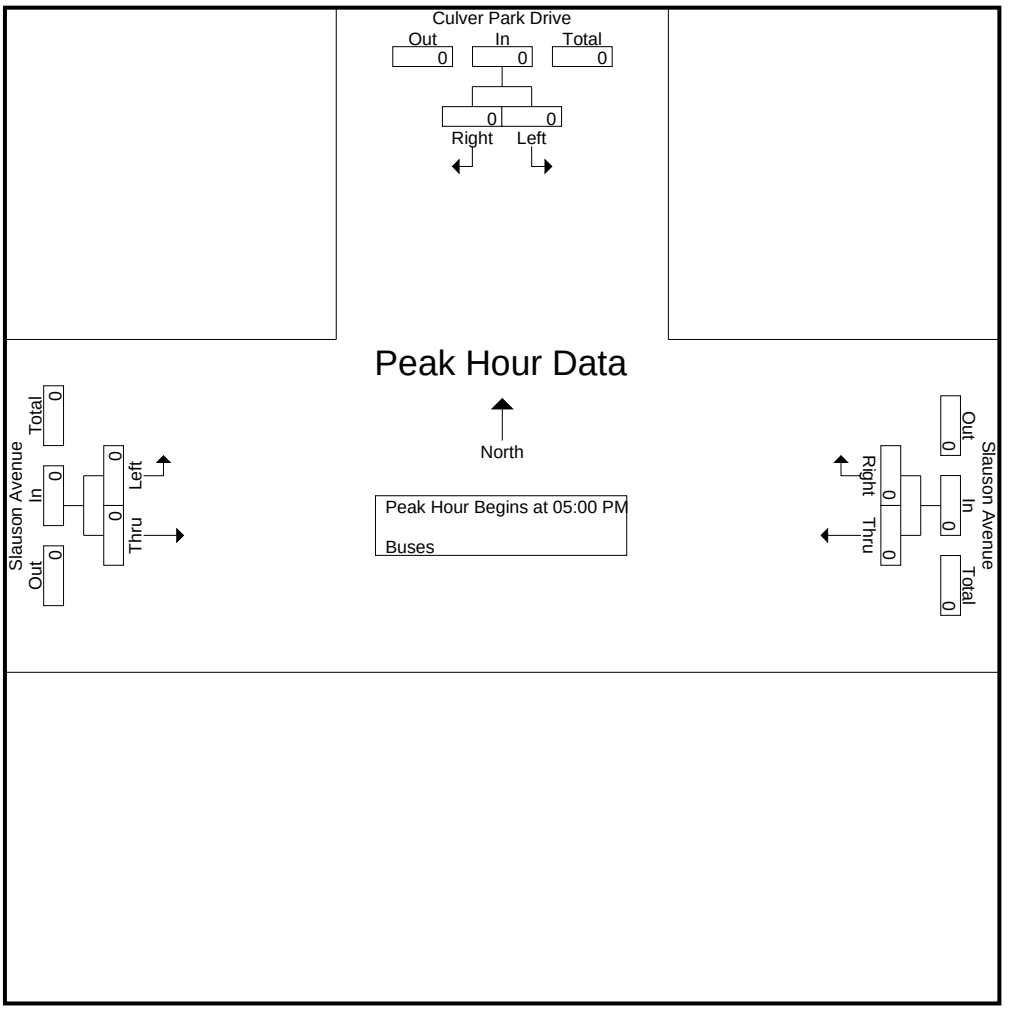

Peak Hour Analysis From 05:00 PM to 05:45 PM - Peak 1 of 1
Peak Hour for Each Approach Begins at:

	05:00 PM			05:00 PM			05:00 PM		
+0 mins.	0	0	0	0	0	0	0	0	0
+15 mins.	0	0	0	0	0	0	0	0	0
+30 mins.	0	0	0	0	0	0	0	0	0
+45 mins.	0	0	0	0	0	0	0	0	0
Total Volume	0	0	0	0	0	0	0	0	0
% App. Total	0	0		0	0		0	0	
PHF	.000	.000	.000	.000	.000	.000	.000	.000	.000

Location: Culver City
N/S: Culver Park Drive
E/W: Slauson Avenue

Date: 4/25/2019
Day: Thursday

PEDESTRIANS

	North Leg Culver Park Drive	East Leg Slauson Avenue	South Leg Culver Park Drive	West Leg Slauson Avenue	
	Pedestrians	Pedestrians	Pedestrians	Pedestrians	
7:00 AM	0	0	0	0	0
7:15 AM	2	0	0	0	2
7:30 AM	2	0	0	0	2
7:45 AM	0	0	0	0	0
8:00 AM	1	0	0	0	1
8:15 AM	1	0	0	0	1
8:30 AM	1	0	0	0	1
8:45 AM	2	0	0	0	2
9:00 AM	1	0	0	0	1
9:15 AM	0	0	0	0	0
9:30 AM	0	0	0	0	0
9:45 AM	0	0	0	0	0
TOTAL VOLUMES:	10	0	0	0	10

	North Leg Culver Park Drive	East Leg Slauson Avenue	South Leg Culver Park Drive	West Leg Slauson Avenue	
	Pedestrians	Pedestrians	Pedestrians	Pedestrians	
3:00 PM	0	0	0	0	0
3:15 PM	0	0	0	0	0
3:30 PM	0	0	0	0	0
3:45 PM	2	0	0	0	2
4:00 PM	0	0	0	0	0
4:15 PM	0	0	0	0	0
4:30 PM	2	0	0	0	2
4:45 PM	0	0	0	0	0
5:00 PM	0	0	0	0	0
5:15 PM	3	0	0	0	3
5:30 PM	2	0	0	0	2
5:45 PM	1	0	0	0	1
TOTAL VOLUMES:	10	0	0	0	10

Counts Unlimited, Inc.
PO Box 1178
Corona, CA 92878
951-268-6268

Location: Culver City
N/S: Culver Park Drive
E/W: Slauson Avenue

Date: 4/25/2019
Day: Thursday

BICYCLES

	Southbound Culver Park Drive			Westbound Slauson Avenue			Northbound Culver Park Drive			Eastbound Slauson Avenue			
	Left	Thru	Right	Left	Thru	Right	Left	Thru	Right	Left	Thru	Right	
7:00 AM	0	0	0	0	0	0	0	0	0	0	0	0	0
7:15 AM	0	0	0	0	0	0	0	0	0	0	0	0	0
7:30 AM	0	0	0	0	0	0	0	0	0	0	0	0	0
7:45 AM	0	0	0	0	0	0	0	0	0	0	0	0	0
8:00 AM	0	0	0	0	0	0	0	0	0	0	0	0	0
8:15 AM	0	0	0	0	1	0	0	0	0	0	0	0	1
8:30 AM	0	0	0	0	0	0	0	0	0	0	0	0	0
8:45 AM	0	0	0	0	1	0	0	0	0	0	0	0	1
9:00 AM	0	0	0	0	0	0	0	0	0	0	0	0	0
9:15 AM	0	0	0	0	0	0	0	0	0	0	0	0	0
9:30 AM	0	0	0	0	1	0	0	0	0	0	0	0	1
9:45 AM	0	0	0	0	1	0	0	0	0	0	0	0	1
TOTAL VOLUMES:	0	0	0	0	4	0	0	0	0	0	0	0	4

	Southbound Culver Park Drive			Westbound Slauson Avenue			Northbound Culver Park Drive			Eastbound Slauson Avenue			
	Left	Thru	Right	Left	Thru	Right	Left	Thru	Right	Left	Thru	Right	
3:00 PM	0	0	0	0	0	0	0	0	0	0	0	0	0
3:15 PM	0	0	0	0	0	0	0	0	0	0	0	0	0
3:30 PM	0	0	0	0	0	0	0	0	0	0	0	0	0
3:45 PM	0	0	0	0	1	0	0	0	0	0	0	0	1
4:00 PM	0	0	0	0	0	0	0	0	0	0	0	0	0
4:15 PM	0	0	0	0	1	0	0	0	0	0	0	0	1
4:30 PM	0	0	0	0	0	0	0	0	0	0	0	0	0
4:45 PM	0	0	0	0	4	0	0	0	0	0	0	0	4
5:00 PM	0	0	0	0	0	0	0	0	0	0	0	0	0
5:15 PM	0	0	0	0	1	0	0	0	0	0	0	0	1
5:30 PM	0	0	0	0	1	0	0	0	0	0	0	0	1
5:45 PM	0	0	0	0	0	0	0	0	0	0	1	0	1
TOTAL VOLUMES:	0	0	0	0	8	0	0	0	0	0	1	0	9

Counts Unlimited, Inc.
PO Box 1178
Corona, CA 92878
951-268-6268

Counts Unlimited, Inc.

PO Box 1178
Corona, CA 92878
Phone: (951) 268-6268
email: counts@countsunlimited.com

City of Los Angeles
Segrell Way
N/ Slauson Avenue
24 Hour Directional Volume Count

LAC003
Site Code: 166-18886

Start Time	11/28/2018 Wed	Northbound Morning	Northbound Afternoon	Hour Totals Morning	Hour Totals Afternoon	Southbound Morning	Southbound Afternoon	Hour Totals Morning	Hour Totals Afternoon	Combined Totals Morning	Combined Totals Afternoon
12:00		0	4			0	13				
12:15		0	7			0	11				
12:30		0	8			1	7				
12:45		0	11	0	30	1	8	2	39	2	69
01:00		0	10			0	15				
01:15		1	13			1	9				
01:30		0	13			0	18				
01:45		1	12	2	48	1	21	2	63	4	111
02:00		0	12			1	13				
02:15		0	8			0	17				
02:30		0	3			0	16				
02:45		0	9	0	32	0	10	1	56	1	88
03:00		1	5			0	13				
03:15		0	9			1	16				
03:30		0	12			0	24				
03:45		0	9	1	35	0	15	1	68	2	103
04:00		0	11			0	26				
04:15		1	5			1	24				
04:30		1	6			1	**29**				
04:45		2	**13**	4	35	0	**37**	2	116	6	151
05:00		0	**22**			0	**34**				
05:15		0	**12**			0	**36**				
05:30		0	**18**			3	29				
05:45		0	12	0	64	2	36	5	135	5	199
06:00		0	15			0	27				
06:15		4	10			7	29				
06:30		5	11			5	43				
06:45		9	16	18	52	4	26	16	125	34	177
07:00		11	1			3	20				
07:15		18	1			1	29				
07:30		**30**	4			8	10				
07:45		**38**	4	97	10	8	7	20	66	117	76
08:00		**17**	7			9	7				
08:15		**19**	5			7	6				
08:30		17	2			**12**	3				
08:45		20	2	73	16	**13**	2	41	18	114	34
09:00		11	3			**7**	5				
09:15		8	3			**11**	0				
09:30		6	1			2	2				
09:45		6	7	31	14	15	2	35	9	66	23
10:00		10	2			10	3				
10:15		9	1			7	1				
10:30		9	1			10	0				
10:45		7	0	35	4	3	1	30	5	65	9
11:00		10	1			8	0				
11:15		9	2			10	1				
11:30		5	3			10	1				
11:45		13	1	37	7	10	0	38	2	75	9
Total		298	347	298	347	193	702	193	702	491	1049
Combined Total		645		645		895		895		1540	
AM Peak	-	07:30	-	-	-	08:30	-	-	-	-	-
Vol.	-	104	-	-	-	43	-	-	-	-	-
P.H.F.		0.684				0.827					
PM Peak	-	-	04:45	-	-	-	04:30	-	-	-	-
Vol.	-	-	65	-	-	-	136	-	-	-	-
P.H.F.			0.739				0.919				
Percentage		46.2%	53.8%			21.6%	78.4%				
ADT/AADT		ADT 1,540		AADT 1,540							

Counts Unlimited, Inc.

PO Box 1178
Corona, CA 92878
Phone: (951) 268-6268
email: counts@countsunlimited.com

City of Los Angeles
Culver Park Drive
N/ Slauson Avenue
24 Hour Directional Volume Count

LAC004
Site Code: 166-18886

Start Time	11/28/2018 Wed	Northbound Morning	Northbound Afternoon	Hour Totals Morning	Hour Totals Afternoon	Southbound Morning	Southbound Afternoon	Hour Totals Morning	Hour Totals Afternoon	Combined Totals Morning	Combined Totals Afternoon
12:00		0	5			0	6				
12:15		0	6			0	4				
12:30		0	4			0	3				
12:45		1	2	1	17	0	2	0	15	1	32
01:00		0	5			0	5				
01:15		0	5			0	5				
01:30		1	5			0	6				
01:45		0	3	1	18	0	12	0	28	1	46
02:00		0	5			0	3				
02:15		0	3			0	6				
02:30		0	5			0	4				
02:45		0	6	0	19	0	6	0	19	0	38
03:00		0	9			0	6				
03:15		0	4			0	5				
03:30		0	6			0	4				
03:45		0	6	0	25	0	7	0	22	0	47
04:00		0	4			0	6				
04:15		0	**10**			0	5				
04:30		0	**8**			0	14				
04:45		1	**8**	1	30	0	7	0	32	1	62
05:00		0	**10**			0	**6**				
05:15		0	5			0	**7**				
05:30		0	6			0	**13**				
05:45		0	4	0	25	1	**11**	1	37	1	62
06:00		0	10			2	6				
06:15		1	5			4	4				
06:30		7	9			1	15				
06:45		5	9	13	33	0	8	7	33	20	66
07:00		5	3			2	4				
07:15		8	2			3	4				
07:30		12	6			6	4				
07:45		12	1	37	12	4	0	15	12	52	24
08:00		**9**	0			**6**	2				
08:15		**18**	1			**4**	5				
08:30		**14**	5			**3**	2				
08:45		**24**	3	65	9	**13**	1	26	10	91	19
09:00		4	1			5	2				
09:15		5	1			3	0				
09:30		7	6			3	9				
09:45		5	1	21	9	7	1	18	12	39	21
10:00		0	1			2	1				
10:15		6	3			4	2				
10:30		1	0			5	1				
10:45		1	0	8	4	4	0	15	4	23	8
11:00		4	0			2	0				
11:15		5	0			2	0				
11:30		1	0			1	0				
11:45		2	0	12	0	2	0	7	0	19	0
Total		159	201	159	201	89	224	89	224	248	425
Combined Total		360		360		313		313		673	
AM Peak	-	08:00	-	-	-	08:00	-	-	-	-	-
Vol.	-	65	-	-	-	26	-	-	-	-	-
P.H.F.		0.677				0.500					
PM Peak	-	-	04:15	-	-	-	05:00	-	-	-	-
Vol.	-	-	36	-	-	-	37	-	-	-	-
P.H.F.			0.900				0.712				
Percentage		44.2%	55.8%			28.4%	71.6%				
ADT/AADT		ADT 673		AADT 673							

Counts Unlimited, Inc.

PO Box 1178
Corona, CA 92878
Phone: (951) 268-6268
email: counts@countsunlimited.com

City of Los Angeles
Slauson Avenue
W/ Segrell Way
24 Hour Directional Volume Count

LAC005
Site Code: 166-18886

Start Time	11/28/2018 Wed	Eastbound Morning	Eastbound Afternoon	Hour Totals Morning	Hour Totals Afternoon	Westbound Morning	Westbound Afternoon	Hour Totals Morning	Hour Totals Afternoon	Combined Totals Morning	Combined Totals Afternoon
12:00		3	29			2	29				
12:15		0	23			0	40				
12:30		3	24			3	30				
12:45		0	22	6	98	4	**32**	9	131	15	229
01:00		0	15			2	**36**				
01:15		0	19			1	**59**				
01:30		0	18			1	**93**				
01:45		1	58	1	110	1	29	5	217	6	327
02:00		0	37			0	24				
02:15		1	24			0	26				
02:30		1	24			0	30				
02:45		0	33	2	118	3	49	3	129	5	247
03:00		1	30			0	31				
03:15		0	38			0	31				
03:30		0	35			1	37				
03:45		1	25	2	128	2	32	3	131	5	259
04:00		3	30			0	37				
04:15		0	36			1	47				
04:30		4	49			0	34				
04:45		3	40	10	155	3	40	4	158	14	313
05:00		2	54			1	47				
05:15		2	**53**			1	40				
05:30		4	**59**			2	34				
05:45		7	**67**	15	233	4	33	8	154	23	387
06:00		10	**70**			6	35				
06:15		12	46			9	28				
06:30		19	57			19	32				
06:45		9	38	50	211	19	28	53	123	103	334
07:00		15	20			21	15				
07:15		21	19			38	21				
07:30		17	18			44	18				
07:45		15	15	68	72	**49**	17	152	71	220	143
08:00		**25**	14			**56**	16				
08:15		**31**	10			**122**	9				
08:30		**73**	7			**117**	14				
08:45		**75**	6	204	37	48	14	343	53	547	90
09:00		23	4			23	8				
09:15		21	6			21	11				
09:30		21	9			20	10				
09:45		22	2	87	21	22	5	86	34	173	55
10:00		16	5			21	8				
10:15		24	2			38	10				
10:30		16	4			18	4				
10:45		24	5	80	16	24	5	101	27	181	43
11:00		25	1			24	1				
11:15		22	1			26	4				
11:30		13	0			25	2				
11:45		22	1	82	3	35	4	110	11	192	14
Total		607	1202	607	1202	877	1239	877	1239	1484	2441
Combined Total		1809		1809		2116		2116		3925	
AM Peak	-	08:00	-	-	-	07:45	-	-	-	-	-
Vol.	-	204	-	-	-	344	-	-	-	-	-
P.H.F.		0.680				0.705					
PM Peak	-	-	05:15	-	-	-	00:45	-	-	-	-
Vol.	-	-	249	-	-	-	220	-	-	-	-
P.H.F.			0.889				0.591				
Percentage		33.6%	66.4%			41.4%	58.6%				
ADT/AADT		ADT 3,925		AADT 3,925							

Queue Study

Location: Culver City
N/S Street: Jefferson Blvd
E/W Street: Slauson Ave

Date: 4/25/2019
Weather: Clear
Movement: EB

Time	Left Queue	Thru Queue	Right Queue	Notes
7:00	0	0	0	
7:01	0	0	0	
7:02	0	0	1	
7:03	0	0	0	
7:04	0	0	0	
7:05	0	0	0	
7:06	0	0	0	
7:07	0	1	0	
7:08	0	0	2	
7:09	0	0	0	
7:10	1	0	0	
7:11	0	0	0	
7:12	1	0	1	
7:13	0	0	0	
7:14	0	1	0	
7:15	0	3	0	
7:16	0	1	1	
7:17	0	1	1	
7:18	0	0	0	
7:19	0	0	0	
7:20	0	0	0	
7:21	0	0	0	
7:22	0	0	0	
7:23	0	0	0	
7:24	0	0	0	
7:25	0	0	0	
7:26	0	0	0	
7:27	0	0	0	
7:28	0	0	1	
7:29	0	0	0	
7:30	0	0	0	
7:31	0	1	0	
7:32	0	0	0	
7:33	0	0	1	
7:34	0	1	0	
7:35	0	1	2	
7:36	0	2	0	

Queue Study

Location: Culver City
N/S Street: Jefferson Blvd
E/W Street: Slauson Ave

Date: 4/25/2019
Weather: Clear
Movement: EB

Time	Left Queue	Thru Queue	Right Queue	Notes
7:37	0	1	0	
7:38	0	1	0	
7:39	0	0	0	
7:40	0	1	1	
7:41	0	0	0	
7:42	0	0	0	
7:43	0	0	2	
7:44	0	0	0	
7:45	1	1	0	
7:46	0	2	0	
7:47	0	2	2	
7:48	0	0	0	
7:49	0	0	2	
7:50	0	0	0	
7:51	0	1	0	
7:52	0	0	0	
7:53	0	1	2	
7:54	0	1	0	
7:55	0	0	0	
7:56	0	1	2	
7:57	0	0	2	
7:58	0	1	2	
7:59	0	0	2	
8:00	0	0	0	
8:01	0	2	1	
8:02	0	0	2	
8:03	0	1	2	
8:04	1	0	1	
8:05	0	0	2	
8:06	0	2	1	
8:07	0	0	0	
8:08	0	0	2	
8:09	0	2	0	
8:10	0	1	1	
8:11	0	1	3	
8:12	0	2	2	
8:13	0	1	2	
8:14	0	1	2	

Queue Study

Location: Culver City
N/S Street: Jefferson Blvd
E/W Street: Slauson Ave

Date: 4/25/2019
Weather: Clear
Movement: EB

Time	Left Queue	Thru Queue	Right Queue	Notes
8:15	0	2	0	
8:16	0	2	1	
8:17	0	2	1	
8:18	0	3	2	
8:19	0	2	2	
8:20	0	2	2	
8:21	0	1	0	
8:22	0	0	2	
8:23	0	2	0	
8:24	0	2	2	
8:25	0	1	0	
8:26	0	0	2	
8:27	1	1	1	
8:28	1	3	1	
8:29	2	1	0	
8:30	0	0	0	
8:31	1	3	3	
8:32	1	2	3	
8:33	0	0	0	
8:34	1	1	1	
8:35	1	1	1	
8:36	1	1	0	
8:37	1	1	1	
8:38	1	3	1	
8:39	0	9	1	Backed up to Segrell
8:40	1	2	1	
8:41	0	5	1	
8:42	0	1	2	
8:43	0	3	0	
8:44	0	0	3	
8:45	1	2	2	
8:46	1	3	0	
8:47	0	1	0	
8:48	0	2	2	
8:49	1	7	1	Backed up to Alley
8:50	1	9	1	Backed up to Segrell
8:51	0	1	2	
8:52	1	5	0	

Queue Study

Location:	Culver City	Date: 4/25/2019
N/S Street:	Jefferson Blvd	Weather: Clear
E/W Street:	Slauson Ave	Movement: EB

Time	Left Queue	Thru Queue	Right Queue	Notes
8:53	1	1	1	
8:54	0	0	0	
8:55	0	0	1	
8:56	0	3	1	
8:57	0	5	1	
8:58	0	1	1	
8:59	0	1	0	
9:00	0	1	0	
9:01	0	0	0	
9:02	0	0	1	
9:03	0	0	2	
9:04	0	0	2	
9:05	1	1	0	
9:06	0	1	2	
9:07	0	0	0	
9:08	1	1	1	
9:09	0	1	3	
9:10	0	0	1	
9:11	0	0	3	
9:12	0	0	1	
9:13	1	0	1	
9:14	0	0	0	
9:15	0	2	1	
9:16	0	0	0	
9:17	0	0	1	
9:18	0	1	1	
9:19	0	2	0	
9:20	0	0	1	
9:21	0	0	0	
9:22	0	0	0	
9:23	1	2	0	
9:24	0	2	3	
9:25	0	0	1	
9:26	1	1	0	
9:27	0	0	1	
9:28	0	0	1	
9:29	0	0	2	
9:30	0	0	2	

Queue Study

Location:	Culver City	Date: 4/25/2019
N/S Street:	Jefferson Blvd	Weather: Clear
E/W Street:	Slauson Ave	Movement: EB

Time	Left Queue	Thru Queue	Right Queue	Notes
9:31	0	0	1	
9:32	1	1	0	
9:33	1	1	0	
9:34	0	1	1	
9:35	0	1	0	
9:36	1	0	1	
9:37	1	0	2	
9:38	1	1	0	
9:39	0	0	2	
9:40	0	0	1	
9:41	0	1	0	
9:42	0	1	1	
9:43	1	0	1	
9:44	1	0	1	
9:45	0	0	0	
9:46	0	0	0	
9:47	1	1	0	
9:48	1	2	2	
9:49	0	1	1	
9:50	0	0	2	
9:51	0	0	0	
9:52	0	0	0	
9:53	1	2	1	
9:54	1	3	1	
9:55	1	1	0	
9:56	1	0	3	
9:57	1	1	1	
9:58	1	1	0	
9:59	2	2	1	

Queue Study

Location: Culver City
N/S Street: Jefferson Blvd
E/W Street: Slauson Ave

Date: 4/25/2019
Weather: Clear
Movement: EB

Time	Left Queue	Thru Queue	Right Queue	Notes
15:00	0	0	1	
15:01	1	0	1	
15:02	0	0	0	
15:03	0	4	1	
15:04	1	4	0	
15:05	2	1	2	
15:06	3	3	1	
15:07	0	1	1	
15:08	0	2	0	
15:09	0	3	0	
15:10	1	5	0	
15:11	1	3	1	
15:12	1	4	2	
15:13	0	0	0	
15:14	0	2	2	
15:15	0	0	1	
15:16	0	1	4	
15:17	0	0	1	
15:18	0	1	1	
15:19	0	5	3	
15:20	1	1	0	
15:21	1	2	1	
15:22	1	5	1	
15:23	0	2	2	
15:24	2	3	2	
15:25	0	3	1	
15:26	3	2	5	
15:27	3	2	4	
15:28	3	5	1	
15:29	0	2	3	
15:30	1	3	1	
15:31	1	1	0	
15:32	1	3	2	
15:33	2	1	2	
15:34	2	1	5	
15:35	1	3	3	

Queue Study

Location:	Culver City	Date: 4/25/2019
N/S Street:	Jefferson Blvd	Weather: Clear
E/W Street:	Slauson Ave	Movement: EB

Time	Left Queue	Thru Queue	Right Queue	Notes
15:36	2	1	2	
15:37	3	3	4	
15:38	1	5	6	
15:39	0	2	2	
15:40	0	3	3	
15:41	1	5	3	
15:42	0	4	1	
15:43	1	5	4	
15:44	1	5	2	
15:45	0	2	1	
15:46	0	4	2	
15:47	0	2	2	
15:48	1	3	2	
15:49	1	1	0	
15:50	0	2	1	
15:51	0	3	2	
15:52	0	1	2	
15:53	0	3	2	
15:54	0	4	4	
15:55	1	2	3	
15:56	0	3	4	
15:57	0	1	2	
15:58	0	1	2	
15:59	1	2	2	
16:00	1	2	1	
16:01	1	1	2	
16:02	1	3	1	
16:03	1	4	1	
16:04	3	3	2	
16:05	3	3	2	
16:06	0	2	3	
16:07	1	4	1	
16:08	2	1	4	
16:09	1	2	1	
16:10	1	1	1	
16:11	1	2	0	
16:12	0	4	2	

Queue Study

Location: Culver City
N/S Street: Jefferson Blvd
E/W Street: Slauson Ave

Date: 4/25/2019
Weather: Clear
Movement: EB

Time	Left Queue	Thru Queue	Right Queue	Notes
16:13	0	5	3	
16:14	1	1	2	
16:15	0	1	1	
16:16	0	2	3	
16:17	0	2	2	
16:18	2	2	3	
16:19	2	3	3	
16:20	4	4	0	
16:21	1	0	2	
16:22	1	0	3	
16:23	0	1	1	
16:24	0	2	4	
16:25	0	3	1	
16:26	0	1	1	
16:27	0	0	3	
16:28	0	1	2	
16:29	0	5	2	
16:30	1	1	1	
16:31	1	3	1	
16:32	0	0	0	
16:33	0	2	1	
16:34	0	2	0	
16:35	0	4	1	
16:36	1	3	3	
16:37	3	1	0	
16:38	3	1	2	
16:39	0	3	1	
16:40	0	2	1	
16:41	1	6	0	Backed up to Alley
16:42	2	7	1	Backed up to Alley
16:43	2	11	1	Backed up to Segrell
16:44	1	7	3	Backed up to Alley
16:45	1	8	0	
16:46	2	2	0	
16:47	0	2	0	
16:48	1	3	3	
16:49	1	0	0	

Queue Study

Location: Culver City
N/S Street: Jefferson Blvd
E/W Street: Slauson Ave

Date: 4/25/2019
Weather: Clear
Movement: EB

Time	Left Queue	Thru Queue	Right Queue	Notes
16:50	1	5	1	
16:51	0	2	4	
16:52	0	3	2	
16:53	0	4	2	
16:54	0	7	1	Backed up to Alley
16:55	1	3	1	
16:56	1	4	1	
16:57	0	1	1	
16:58	0	2	3	
16:59	0	4	2	
17:00	1	0	2	
17:01	2	1	4	
17:02	0	1	6	
17:03	0	4	3	
17:04	0	0	4	
17:05	0	1	0	
17:06	0	2	1	
17:07	0	1	3	
17:08	0	2	3	
17:09	1	3	2	
17:10	1	5	2	
17:11	1	3	2	
17:12	1	1	2	
17:13	2	1	0	
17:14	2	1	4	
17:15	0	0	0	
17:16	0	0	0	
17:17	1	6	2	Backed up to Alley
17:18	1	9	2	Backed up to Segrell
17:19	1	5	2	Backed up to Alley
17:20	1	6	8	
17:21	0	5	6	
17:22	0	0	6	
17:23	1	3	3	
17:24	1	4	0	
17:25	2	4	3	
17:26	2	4	3	

Queue Study

Location:	Culver City	Date: 4/25/2019
N/S Street:	Jefferson Blvd	Weather: Clear
E/W Street:	Slauson Ave	Movement: EB

Time	Left Queue	Thru Queue	Right Queue	Notes
17:27	0	6	3	
17:28	0	4	3	
17:29	2	3	4	
17:30	0	4	1	
17:31	1	6	2	
17:32	0	3	1	
17:33	0	3	2	
17:34	0	2	2	
17:35	0	1	0	
17:36	1	5	1	
17:37	0	3	3	
17:38	1	5	4	
17:39	2	4	0	
17:40	2	5	2	
17:41	0	4	3	
17:42	1	1	3	
17:43	0	6	1	
17:44	0	8	0	Backed up to Segrell
17:45	0	3	0	
17:46	0	4	1	
17:47	1	8	4	Backed up to Segrell
17:48	1	2	2	
17:49	0	2	2	
17:50	0	2	3	
17:51	1	4	3	
17:52	1	2	3	
17:53	0	4	2	
17:54	0	3	0	
17:55	0	3	2	
17:56	6	5	3	
17:57	1	7	0	Backed up to Alley
17:58	0	3	3	
17:59	0	3	0	

Queue Study

Location: Culver City
N/S Street: Alley Way
E/W Street: Slauson Ave

Date: 4/25/2019
Weather: Clear
Movement: SB

*****A large portion of vehicles (90% est.) would not make a full stop and would roll through the intersection**

Time	Left Queue	Thru Queue	Right Queue	Notes	Delay
15:00					15:03 - 18 Sec - SBR
15:01					15:03 - 22 Sec - SBL
15:02					15:03 - 23 Sec - SBR
15:03	1		2		15:05 - 11 Sec - SBL
15:04					15:07 - 9 Sec - SBL
15:05	1				15:09 - 4 Sec - SBR
15:06					15:22 - 8 Sec - SBL
15:07	1				15:22 - 5 Sec - SBL
15:08					15:23 - 12 Sec SBL
15:09			1		15:26 - 24 Sec - SBL
15:10					15:29 - 20 Sec - SBL
15:11					15:29 - 18 Sec - SBR
15:12					15:38 - 12 Sec - SBL
15:13					15:43 - 20 Sec - SBL
15:14					15:50 - 20 Sec - SBR
15:15					15:50 - 10 Sec - SBR
15:16					16:02 - 15 Sec - SBR
15:17					16:06 - 4 Sec - SBL
15:18					16:13 - 9 Sec - SBR
15:19					16:16 - 14 Sec - SBL
15:20					16:16 - 12 Sec - SBL
15:21					16:30 - 14 Sec - SBR
15:22	1*				16:36 - 1 Sec - SBL
15:23	1				16:40 - 10 Sec - SBL
15:24					16:42 - 15 Sec - SBL
15:25					16:42 - 4 Sec - SBL
15:26	1				16:43 - 35 Sec - SBL
15:27					16:45 - 4 Sec - SBL
15:28					16:48 - 6 Sec - SBL
15:29	1		1		16:56 - 8 Sec - SBL
15:30					16:58 - 5 Sec - SBR
15:31					16:58 - 8 Sec - SBL
15:32					16:59 - 4 Sec - SBL
15:33					17:02 - 6 Sec - SBL
15:34					17:10 - 16 Sec - SBL
15:35					17:11 - 14 Sec - SBL
15:36					17:19 - 7 Sec - SBL
15:37					17:24 - 5 Sec - SBL
15:38	1				17:26 - 43 Sec - SBL
15:39					17:34 - 3 Sec - SBL
15:40					17:35 - 8 Sec - SBR
15:41					17:44 - 10 Sec - SBR
15:42					17:45 - 11 Sec - SBR
15:43	1				17:46 - 6 Sec - SBL
15:44					17:47 - 3 Sec - SBL
15:45					17:54 - 2 Sec - SBL
15:46					17:58 - 14 Sec - SBL
15:47					
15:48					
15:49					

Queue Study

Location: Culver City
N/S Street: Alley Way
E/W Street: Slauson Ave

Date: 4/25/2019
Weather: Clear
Movement: SB

*****A large portion of vehicles (90% est.) would not make a full stop and would roll through the intersection**

Time	Left Queue	Thru Queue	Right Queue	Notes	Delay
15:50			2		
15:51					
15:52					
15:53					
15:54					
15:55					
15:56					
15:57					
15:58					
15:59					
16:00					
16:01				(1) WB U-Turn	
16:02			1		
16:03					
16:04					
16:05					
16:06	1				
16:07					
16:08					
16:09					
16:10					
16:11					
16:12					
16:13			1		
16:14					
16:15				(1) EB U-Turn	
16:16	2				
16:17					
16:18					
16:19					
16:20					
16:21					
16:22					
16:23					
16:24					
16:25					
16:26					
16:27					
16:28					
16:29					
16:30			1		
16:31					
16:32					
16:33					
16:34					
16:35					
16:36	1				
16:37					
16:38					
16:39					
16:40	1				

Queue Study

Location: Culver City
N/S Street: Alley Way
E/W Street: Slauson Ave

Date: 4/25/2019
Weather: Clear
Movement: SB

*****A large portion of vehicles (90% est.) would not make a full stop and would roll through the intersection**

Time	Left Queue	Thru Queue	Right Queue	Notes	Delay
16:41					
16:42	1				
16:43	1*				
16:44				(1) WB U-Turn	
16:45	1				
16:46					
16:47					
16:48	1				
16:49					
16:50					
16:51					
16:52					
16:53					
16:54					
16:55					
16:56	1				
16:57					
16:58	2				
16:59	1				
17:00					
17:01					
17:02	1				
17:03					
17:04					
17:05					
17:06					
17:07					
17:08					
17:09					
17:10	1				
17:11	1				
17:12					
17:13					
17:14					
17:15					
17:16					
17:17					
17:18					
17:19	1				
17:20					
17:21					
17:22					
17:23					
17:24	1				
17:25					
17:26	1				
17:27					
17:28					
17:29					
17:30					
17:31					

Queue Study

Location: Culver City
N/S Street: Alley Way
E/W Street: Slauson Ave

Date: 4/25/2019
Weather: Clear
Movement: SB

*****A large portion of vehicles (90% est.) would not make a full stop and would roll through the intersection**

Time	Left Queue	Thru Queue	Right Queue	Notes	Delay
17:32					
17:33					
17:34	1				
17:35			1		
17:36					
17:37					
17:38					
17:39					
17:40					
17:41					
17:42					
17:43					
17:44			1		
17:45			1		
17:46	1				
17:47	1				
17:48					
17:49					
17:50					
17:51					
17:52					
17:53					
17:54	1				
17:55					
17:56					
17:57					
17:58	1				
17:59					

* Max Queue of 1 Vehicle occurred at multiple times in the 1 minute interval

Queue Study

Location: Culver City
N/S Street: Segrell Way
E/W Street: Slauson Ave

Date: 4/25/2019
Weather: Clear
Movement: SB

*****A large portion of vehicles (90% est.) would not make a full stop and would roll through the intersection**

Time	Left Queue	Thru Queue	Right Queue	Notes	Delay
7:00					7:59 - 7 Sec - SBL
7:01					8:13 - 6 Sec - SBL
7:02					8:13 - 4 Sec - SBR
7:03					8:16 - 19 Sec - SBL
7:04					8:17 - 11 Sec - SBL
7:05					8:17 - 2 Sec - SBL
7:06					8:17 - 15 Sec - SBL
7:07					8:27 - 19 Sec - SBL
7:08					
7:09					
7:10					
7:11					
7:12					
7:13					
7:14					
7:15					
7:16					
7:17					
7:18					
7:19					
7:20					
7:21					
7:22					
7:23					
7:24					
7:25					
7:26					
7:27					
7:28					
7:29					
7:30					
7:31					
7:32					
7:33					
7:34					
7:35					
7:36					
7:37					
7:38					
7:39					
7:40					
7:41					
7:42					
7:43					
7:44					
7:45					
7:46					
7:47					
7:48					
7:49					
7:50					

Queue Study

Location: Culver City
N/S Street: Segrell Way
E/W Street: Slauson Ave

Date: 4/25/2019
Weather: Clear
Movement: SB

*****A large portion of vehicles (90% est.) would not make a full stop and would roll through the intersection**

Time	Left Queue	Thru Queue	Right Queue	Notes	Delay
7:51					
7:52					
7:53					
7:54					
7:55					
7:56					
7:57					
7:58					
7:59	1				
8:00					
8:01					
8:02					
8:03					
8:04					
8:05					
8:06					
8:07					
8:08					
8:09					
8:10					
8:11					
8:12					
8:13	2				
8:14					
8:15					
8:16					
8:17	4				
8:18					
8:19					
8:20					
8:21					
8:22					
8:23					
8:24					
8:25					
8:26					
8:27	1				
8:28					
8:29					
8:30					
8:31					
8:32					
8:33					
8:34					
8:35					
8:36					
8:37					
8:38					
8:39					
8:40					
8:41					
8:42					

Queue Study

Location: Culver City
N/S Street: Segrell Way
E/W Street: Slauson Ave

Date: 4/25/2019
Weather: Clear
Movement: SB

*****A large portion of vehicles (90% est.) would not make a full stop and would roll through the intersection**

Time	Left Queue	Thru Queue	Right Queue	Notes	Delay
8:43					
8:44					
8:45					
8:46					
8:47					
8:48					
8:49					
8:50					
8:51					
8:52					
8:53					
8:54					
8:55					
8:56					
8:57					
8:58					
8:59					
9:00					
9:01					
9:02					
9:03					
9:04					
9:05					
9:06					
9:07					
9:08					
9:09					
9:10					
9:11					
9:12					
9:13					
9:14					
9:15					
9:16					
9:17					
9:18					
9:19					
9:20					
9:21					
9:22					
9:23					
9:24					
9:25					
9:26					
9:27					
9:28					
9:29					
9:30					
9:31					
9:32					
9:33					
9:34					

Queue Study

Location: Culver City
N/S Street: Segrell Way
E/W Street: Slauson Ave

Date: 4/25/2019
Weather: Clear
Movement: SB

*****A large portion of vehicles (90% est.) would not make a full stop and would roll through the intersection**

Time	Left Queue	Thru Queue	Right Queue	Notes	Delay
9:35					
9:36					
9:37					
9:38					
9:39					
9:40					
9:41					
9:42					
9:43					
9:44					
9:45					
9:46					
9:47					
9:48					
9:49					
9:50					
9:51					
9:52					
9:53					
9:54					
9:55					
9:56					
9:57					
9:58					
9:59					

Queue Study

Location: Culver City
N/S Street: Segrell Way
E/W Street: Slauson Ave

Date: 4/25/2019
Weather: Clear
Movement: SB

*****A large portion of vehicles (90% est.) would not make a full stop and would roll through the intersection**

Time	Left Queue	Thru Queue	Right Queue	Notes	Delay
15:00					15:03 - 9 Sec - SBL
15:01					15:05 - 5 Sec - SBL
15:02					15:25 - 5 Sec - SBL
15:03	1				15:26 - 35 Sec - SBL
15:04					15:32 - 12 Sec - SBL
15:05	1				15:32 - 4 Sec - SBL
15:06					15:43 - 13 Sec - SBL
15:07					16:02 - 20 Sec - SBL
15:08					16:18 - 10 Sec - SBL
15:09					16:18 - 6 Sec - SBL
15:10					16:29 - 14 Sec - SBL
15:11					16:44 - 4 Sec - SBL
15:12					16:44 - 5 Sec - SBL
15:13					17:03 - 3 Sec - SBL
15:14					17:03 - 9 Sec - SBL
15:15					17:13 - 5 Sec - SBL
15:16					17:13 - 6 Sec - SBL
15:17					17:19 - 17 Sec - SBL
15:18					17:19 - 30 Sec - SBL
15:19					17:31 - 14 Sec - SBL
15:20					17:53 - 8 Sec - SBL
15:21					17:53 - 6 Sec - SBL
15:22					17:53 - 5 Sec - SBL
15:23					17:53 - 5 Sec - SBL
15:24					17:54 - 8 Sec - SBL
15:25					17:57 - 7 Sec - SBL
15:26	2				17:58 - 6 Sec - SBL
15:27					17:58 - 7 Sec - SBL
15:28					17:58 - 7 Sec - SBL
15:29					
15:30					
15:31					
15:32	2				
15:33					
15:34					
15:35					
15:36					
15:37					
15:38					
15:39					
15:40					(1) WB U-Turn
15:41					
15:42					
15:43	1				
15:44					
15:45					
15:46					
15:47					
15:48					
15:49					
15:50					
15:51					

Queue Study

Location: Culver City
N/S Street: Segrell Way
E/W Street: Slauson Ave

Date: 4/25/2019
Weather: Clear
Movement: SB

*****A large portion of vehicles (90% est.) would not make a full stop and would roll through the intersection**

Time	Left Queue	Thru Queue	Right Queue	Notes	Delay
15:52					
15:53					
15:54					
15:55					
15:56					
15:57					
15:58					
15:59					
16:00					
16:01					
16:02	1				
16:03					
16:04					
16:05					
16:06					
16:07					
16:08					
16:09					
16:10					
16:11					
16:12					
16:13					
16:14					
16:15					
16:16					
16:17					
16:18	2				
16:19					
16:20					
16:21					
16:22					
16:23					
16:24					
16:25					
16:26					
16:27					
16:28					
16:29	1				
16:30					
16:31					
16:32					
16:33					
16:34					
16:35					
16:36					
16:37					
16:38					
16:39					
16:40					
16:41					
16:42					
16:43					

Queue Study

Location: Culver City
N/S Street: Segrell Way
E/W Street: Slauson Ave

Date: 4/25/2019
Weather: Clear
Movement: SB

*****A large portion of vehicles (90% est.) would not make a full stop and would roll through the intersection**

Time	Left Queue	Thru Queue	Right Queue	Notes	Delay
16:44	2				
16:45					
16:46					
16:47					
16:48					
16:49					
16:50					
16:51					
16:52					
16:53					
16:54					
16:55					
16:56					
16:57					
16:58					
16:59					
17:00					
17:01					
17:02					
17:03	2				
17:04					
17:05					
17:06					
17:07					
17:08					
17:09					
17:10					
17:11					
17:12					
17:13	2				
17:14					
17:15					
17:16					
17:17					
17:18					
17:19	2				
17:20					
17:21					
17:22					
17:23					
17:24					
17:25					
17:26					
17:27					
17:28					
17:29					
17:30					
17:31	1				
17:32					
17:33					
17:34					
17:35					

Queue Study

Location: Culver City
N/S Street: Segrell Way
E/W Street: Slauson Ave

Date: 4/25/2019
Weather: Clear
Movement: SB

*****A large portion of vehicles (90% est.) would not make a full stop and would roll through the intersection**

Time	Left Queue	Thru Queue	Right Queue	Notes	Delay
17:36					
17:37					
17:38					
17:39					
17:40					
17:41					
17:42					
17:43					
17:44					
17:45					
17:46					
17:47					
17:48					
17:49					
17:50					
17:51					
17:52					
17:53	4				
17:54	1				
17:55					
17:56					
17:57	1				
17:58	3				
17:59					

Queue Study

Location: Culver City
N/S Street: Culver Park Drive
E/W Street: Slauson Ave

Date: 4/25/2019
Weather: Clear
Movement: SB

*****A large portion of vehicles (90% est.) would not make a full stop and would roll through the intersection**

Time	Left Queue	Thru Queue	Right Queue	Notes	Delay
7:00					7:04 - 5 Sec - SBL
7:01					7:14 - 7 Sec - SBL
7:02					7:15 - 5 Sec - SBL
7:03					7:31 - 8 Sec - SBL
7:04	1				7:34 - 2 Sec - SBL
7:05					7:38 - 10 Sec - SBL
7:06					7:43 - 5 Sec - SBL
7:07					7:43- 4 Sec - SBL
7:08					7:48 - 20 Sec - SBL
7:09					8:01 - 4 Sec - SBL
7:10					8:05 - 2 Sec - SBL
7:11					8:06 - 5 Sec - SBL
7:12					8:08 - 8 Sec - SBL
7:13					8:13 - 18 Sec - SBL
7:14	1				8:14 - 9 Sec - SBL
7:15	1				8:16 - 6 Sec - SBL
7:16					8:17 - 11 Sec - SBL
7:17					8:17 - 6 Sec - SBL
7:18					8:17 - 9 Sec - SBL
7:19					8:18 - 18 Sec - SBL
7:20					8:30 - 4 Sec - SBL
7:21					8:31 - 10 Sec - SBL
7:22					8:36 - 6 Sec - SBL
7:23					8:37 - 4 Sec - SBL
7:24					8:43 - 25 Sec - SBR
7:25					8:47 - 3 Sec - SBL
7:26					8:48 - 12 Sec - SBL
7:27					8:48 - 8 Sec - SBL
7:28					8:48 - 7 Sec - SBL
7:29					8:49 - 6 Sec - SBL
7:30					8:49 - 12 Sec - SBL
7:31	1				8:49 - 15 Sec - SBL
7:32					8:52 - 3 Sec - SBL
7:33					9:49 - 2 Sec - SBL
7:34	1				
7:35					
7:36					
7:37					
7:38	1				
7:39					
7:40					
7:41					
7:42					
7:43	2				
7:44					
7:45					
7:46					
7:47					
7:48	1				
7:49					
7:50					
7:51					
7:52					
7:53					
7:54					
7:55					

Queue Study

Location: Culver City
N/S Street: Culver Park Drive
E/W Street: Slauson Ave

Date: 4/25/2019
Weather: Clear
Movement: SB

*****A large portion of vehicles (90% est.) would not make a full stop and would roll through the intersection**

Time	Left Queue	Thru Queue	Right Queue	Notes	Delay
7:56					
7:57					
7:58					
7:59					
8:00					
8:01	1				
8:02					
8:03					
8:04					
8:05	1				
8:06	1				
8:07					
8:08	1				
8:09					
8:10					
8:11					
8:12					
8:13	1				
8:14	1				
8:15					
8:16	1				
8:17	2 *				
8:18	1				
8:19					
8:20					
8:21					
8:22					
8:23					
8:24					
8:25					
8:26					
8:27					
8:28					
8:29					
8:30	1				
8:31	1				
8:32					
8:33					
8:34					
8:35					
8:36	1				
8:37	1				
8:38					
8:39					
8:40					
8:41					
8:42					
8:43			1		
8:44					
8:45					
8:46					
8:47	1				
8:48	3				
8:49	3				
8:50					
8:51					

Queue Study

Location: Culver City
N/S Street: Culver Park Drive
E/W Street: Slauson Ave

Date: 4/25/2019
Weather: Clear
Movement: SB

*****A large portion of vehicles (90% est.) would not make a full stop and would roll through the intersection**

Time	Left Queue	Thru Queue	Right Queue	Notes	Delay
8:52	1				
8:53					
8:54					
8:55					
8:56					
8:57					
8:58					
8:59					
9:00					
9:01					
9:02					
9:03					
9:04					
9:05					
9:06					
9:07					
9:08					
9:09					
9:10					
9:11					
9:12					
9:13					
9:14					
9:15					
9:16					
9:17					
9:18					
9:19					
9:20					
9:21					
9:22					
9:23					
9:24					
9:25					
9:26					
9:27					
9:28					
9:29					
9:30					
9:31					
9:32					
9:33					
9:34					
9:35					
9:36					
9:37					
9:38					
9:39					
9:40					
9:41					
9:42					
9:43					
9:44					
9:45					
9:46					
9:47					
9:48					
9:49	1				

Queue Study

Location: Culver City
N/S Street: Culver Park Drive
E/W Street: Slauson Ave

Date: 4/25/2019
Weather: Clear
Movement: SB

*****A large portion of vehicles (90% est.) would not make a full stop and would roll through the intersection**

Time	Left Queue	Thru Queue	Right Queue	Notes	Delay
9:50					
9:51					
9:52					
9:53					
9:54					
9:55					
9:56					
9:57					
9:58					
9:59					

* Max Queue of 2 Vehicle occurred in the 1 minute interval

Queue Study

Location: Culver City
N/S Street: Culver Park Drive
E/W Street: Slauson Ave

Date: 4/25/2019
Weather: Clear
Movement: SB

*****A large portion of vehicles (90% est.) would not make a full stop and would roll through the intersection**

Time	Left Queue	Thru Queue	Right Queue	Notes	Delay
15:00					15:03 - 3 Sec - SBL
15:01					15:22 - 3 Sec - SBL
15:02					15:22 - 10 Sec - SBL
15:03	1				15:25 - 5 Sec - SBL
15:04					15:25 - 2 Sec - SBL
15:05					16:12 - 5 Sec - SBL
15:06					16:12 - 2 Sec - SBL
15:07					16:15 - 5 Sec - SBL
15:08					16:15 - 2 Sec - SBL
15:09					16:28 - 10 Sec - SBL
15:10					16:30 - 11 Sec - SBL
15:11					17:46 - 5 Sec - SBL
15:12					17:53 - 7 Sec - SBL
15:13					
15:14					
15:15					
15:16					
15:17					
15:18					
15:19					
15:20					
15:21					
15:22	2				
15:23					
15:24					
15:25	2				
15:26					
15:27					
15:28					
15:29					
15:30					
15:31					
15:32					
15:33					
15:34					
15:35					
15:36					
15:37					
15:38					
15:39					
15:40					
15:41					
15:42					
15:43					
15:44					
15:45					
15:46					
15:47					
15:48					
15:49					

Queue Study

Location: Culver City
N/S Street: Culver Park Drive
E/W Street: Slauson Ave

Date: 4/25/2019
Weather: Clear
Movement: SB

*****A large portion of vehicles (90% est.) would not make a full stop and would roll through the intersection**

Time	Left Queue	Thru Queue	Right Queue	Notes	Delay
15:50					
15:51					
15:52					
15:53					
15:54					
15:55					
15:56					
15:57					
15:58					
15:59					
16:00					
16:01					
16:02					
16:03					
16:04					
16:05					
16:06					
16:07					
16:08					
16:09					
16:10					
16:11					
16:12	2				
16:13					
16:14					
16:15	2				
16:16					
16:17					
16:18					
16:19					
16:20					
16:21					
16:22					
16:23					
16:24					
16:25					
16:26					
16:27					
16:28	1				
16:29					
16:30	1				
16:31					
16:32					
16:33					
16:34					
16:35					
16:36					
16:37					
16:38					
16:39					
16:40					

Queue Study

Location: Culver City
N/S Street: Culver Park Drive
E/W Street: Slauson Ave

Date: 4/25/2019
Weather: Clear
Movement: SB

*****A large portion of vehicles (90% est.) would not make a full stop and would roll through the intersection**

Time	Left Queue	Thru Queue	Right Queue	Notes	Delay
16:41					
16:42					
16:43					
16:44					
16:45					
16:46					
16:47					
16:48					
16:49					
16:50					
16:51					
16:52					
16:53					
16:54					
16:55					
16:56					
16:57					
16:58					
16:59					
17:00					
17:01					
17:02					
17:03					
17:04					
17:05					
17:06					
17:07					
17:08					
17:09					
17:10					
17:11					
17:12					
17:13					
17:14					
17:15					
17:16					
17:17					
17:18					
17:19					
17:20					
17:21					
17:22					
17:23					
17:24					
17:25					
17:26					
17:27					
17:28					
17:29					
17:30					
17:31					

Queue Study

Location: Culver City
N/S Street: Culver Park Drive
E/W Street: Slauson Ave

Date: 4/25/2019
Weather: Clear
Movement: SB

*****A large portion of vehicles (90% est.) would not make a full stop and would roll through the intersection**

Time	Left Queue	Thru Queue	Right Queue	Notes	Delay
17:32					
17:33					
17:34					
17:35					
17:36					
17:37					
17:38					
17:39					
17:40					
17:41					
17:42					
17:43					
17:44					
17:45					
17:46	1				
17:47					
17:48					
17:49					
17:50					
17:51					
17:52					
17:53	1				
17:54					
17:55					
17:56					
17:57					
17:58					
17:59					

Counts Unlimited
PO Box 1178
Corona, CA 92878
(951) 268-6268

City of Culver City
N/S: Jefferson Boulevard
E/W: Selmaraine Drive
Weather: Clear

File Name : 01_CVC_Jefferson_Selmaraine AM
Site Code : 16619523
Start Date : 8/6/2019
Page No : 1

Groups Printed- Passenger Vehicles - Dual Wheeled - Buses

	Jefferson Boulevard Southbound			Selmaraine Drive Westbound			Jefferson Boulevard Northbound			
Start Time	Left	Thru	App. Total	Left	Right	App. Total	Thru	Right	App. Total	Int. Total
07:00 AM	2	169	171	0	5	5	121	5	126	302
07:15 AM	1	168	169	0	7	7	141	3	144	320
07:30 AM	1	230	231	0	3	3	184	2	186	420
07:45 AM	3	199	202	0	10	10	170	3	173	385
Total	7	766	773	0	25	25	616	13	629	1427
08:00 AM	3	200	203	0	9	9	158	3	161	373
08:15 AM	1	245	246	0	10	10	220	6	226	482
08:30 AM	1	256	257	0	2	2	235	1	236	495
08:45 AM	2	306	308	0	4	4	231	3	234	546
Total	7	1007	1014	0	25	25	844	13	857	1896
09:00 AM	4	268	272	0	2	2	210	3	213	487
09:15 AM	3	246	249	0	1	1	200	3	203	453
09:30 AM	2	245	247	0	3	3	182	0	182	432
09:45 AM	1	200	201	0	2	2	186	2	188	391
Total	10	959	969	0	8	8	778	8	786	1763
Grand Total	24	2732	2756	0	58	58	2238	34	2272	5086
Apprch %	0.9	99.1		0	100		98.5	1.5		
Total %	0.5	53.7	54.2	0	1.1	1.1	44	0.7	44.7	
Passenger Vehicles	21	2653	2674	0	53	53	2155	33	2188	4915
% Passenger Vehicles	87.5	97.1	97	0	91.4	91.4	96.3	97.1	96.3	96.6
Dual Wheeled	3	51	54	0	5	5	52	1	53	112
% Dual Wheeled	12.5	1.9	2	0	8.6	8.6	2.3	2.9	2.3	2.2
Buses	0	28	28	0	0	0	31	0	31	59
% Buses	0	1	1	0	0	0	1.4	0	1.4	1.2

	Jefferson Boulevard Southbound			Selmaraine Drive Westbound			Jefferson Boulevard Northbound			
Start Time	Left	Thru	App. Total	Left	Right	App. Total	Thru	Right	App. Total	Int. Total
Peak Hour Analysis From 07:00 AM to 09:45 AM - Peak 1 of 1										
Peak Hour for Entire Intersection Begins at 08:15 AM										
08:15 AM	1	245	246	0	**10**	**10**	220	**6**	226	482
08:30 AM	1	256	257	0	2	2	**235**	1	**236**	495
08:45 AM	2	**306**	**308**	0	4	4	231	3	234	**546**
09:00 AM	**4**	268	272	0	2	2	210	3	213	487
Total Volume	8	1075	1083	0	18	18	896	13	909	2010
% App. Total	0.7	99.3		0	100		98.6	1.4		
PHF	.500	.878	.879	.000	.450	.450	.953	.542	.963	.920

Counts Unlimited
PO Box 1178
Corona, CA 92878
(951) 268-6268

City of Culver City
N/S: Jefferson Boulevard
E/W: Selmaraine Drive
Weather: Clear

File Name : 01_CVC_Jefferson_Selmaraine AM
Site Code : 16619523
Start Date : 8/6/2019
Page No : 2

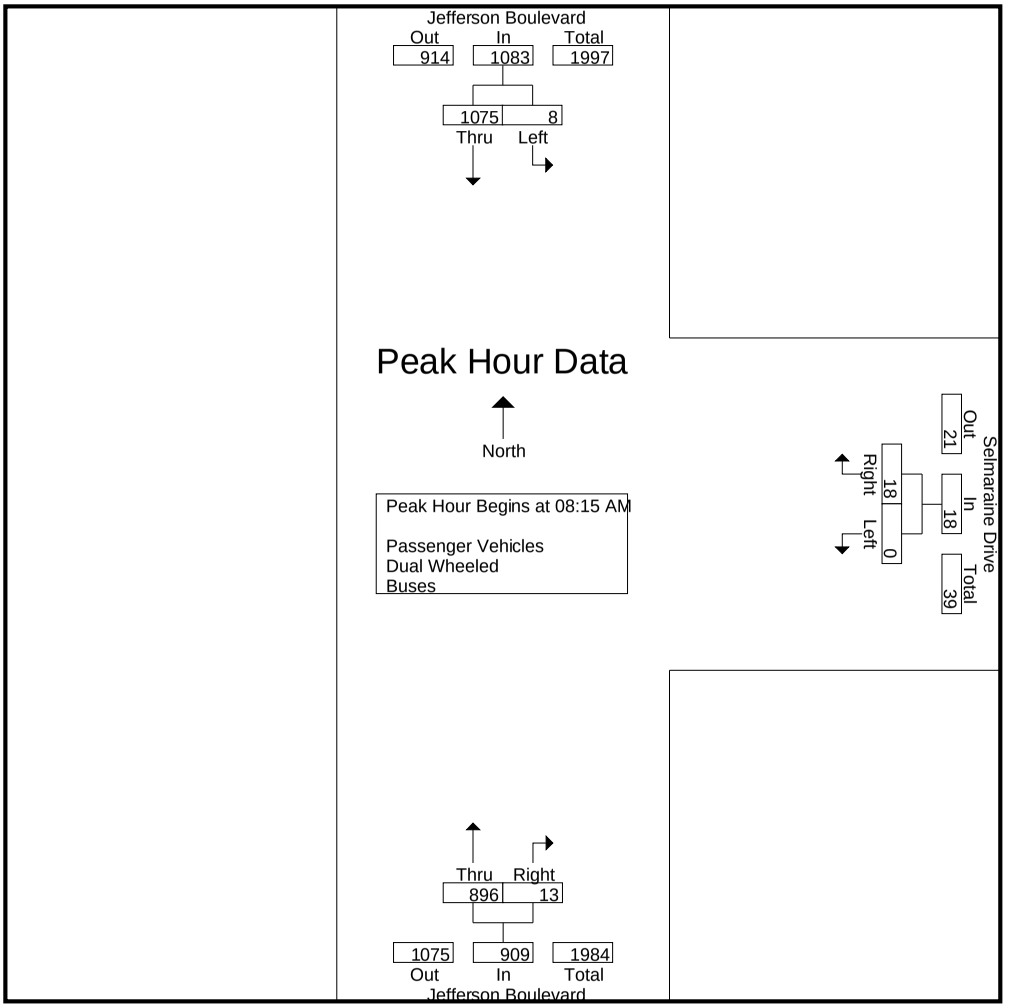

Peak Hour Analysis From 07:00 AM to 09:45 AM - Peak 1 of 1
Peak Hour for Each Approach Begins at:

	08:30 AM			07:30 AM			08:15 AM		
+0 mins.	1	256	257	0	3	3	220	**6**	226
+15 mins.	2	**306**	**308**	0	**10**	**10**	**235**	1	**236**
+30 mins.	**4**	268	272	0	9	9	231	3	234
+45 mins.	3	246	249	0	10	10	210	3	213
Total Volume	10	1076	1086	0	32	32	896	13	909
% App. Total	0.9	99.1		0	100		98.6	1.4	
PHF	.625	.879	.881	.000	.800	.800	.953	.542	.963

Counts Unlimited
PO Box 1178
Corona, CA 92878
(951) 268-6268

City of Culver City
N/S: Jefferson Boulevard
E/W: Selmaraine Drive
Weather: Clear

File Name : 01_CVC_Jefferson_Selmaraine AM
Site Code : 16619523
Start Date : 8/6/2019
Page No : 1

Groups Printed- Passenger Vehicles

	Jefferson Boulevard Southbound			Selmaraine Drive Westbound			Jefferson Boulevard Northbound			
Start Time	Left	Thru	App. Total	Left	Right	App. Total	Thru	Right	App. Total	Int. Total
07:00 AM	1	166	167	0	4	4	116	5	121	292
07:15 AM	1	160	161	0	7	7	139	3	142	310
07:30 AM	1	222	223	0	2	2	175	2	177	402
07:45 AM	3	192	195	0	10	10	164	3	167	372
Total	6	740	746	0	23	23	594	13	607	1376
08:00 AM	2	194	196	0	9	9	154	3	157	362
08:15 AM	1	235	236	0	7	7	210	5	215	458
08:30 AM	1	251	252	0	2	2	227	1	228	482
08:45 AM	2	300	302	0	4	4	226	3	229	535
Total	6	980	986	0	22	22	817	12	829	1837
09:00 AM	3	260	263	0	2	2	205	3	208	473
09:15 AM	3	241	244	0	1	1	191	3	194	439
09:30 AM	2	240	242	0	3	3	169	0	169	414
09:45 AM	1	192	193	0	2	2	179	2	181	376
Total	9	933	942	0	8	8	744	8	752	1702
Grand Total	21	2653	2674	0	53	53	2155	33	2188	4915
Apprch %	0.8	99.2		0	100		98.5	1.5		
Total %	0.4	54	54.4	0	1.1	1.1	43.8	0.7	44.5	

	Jefferson Boulevard Southbound			Selmaraine Drive Westbound			Jefferson Boulevard Northbound			
Start Time	Left	Thru	App. Total	Left	Right	App. Total	Thru	Right	App. Total	Int. Total
Peak Hour Analysis From 08:15 AM to 09:00 AM - Peak 1 of 1										
Peak Hour for Entire Intersection Begins at 08:15 AM										
08:15 AM	1	235	236	0	**7**	**7**	210	**5**	215	458
08:30 AM	1	251	252	0	2	2	**227**	1	228	482
08:45 AM	2	**300**	**302**	0	4	4	226	3	**229**	**535**
09:00 AM	**3**	260	263	0	2	2	205	3	208	473
Total Volume	7	1046	1053	0	15	15	868	12	880	1948
% App. Total	0.7	99.3		0	100		98.6	1.4		
PHF	.583	.872	.872	.000	.536	.536	.956	.600	.961	.910

Counts Unlimited
PO Box 1178
Corona, CA 92878
(951) 268-6268

City of Culver City
N/S: Jefferson Boulevard
E/W: Selmaraine Drive
Weather: Clear

File Name : 01_CVC_Jefferson_Selmaraine AM
Site Code : 16619523
Start Date : 8/6/2019
Page No : 2

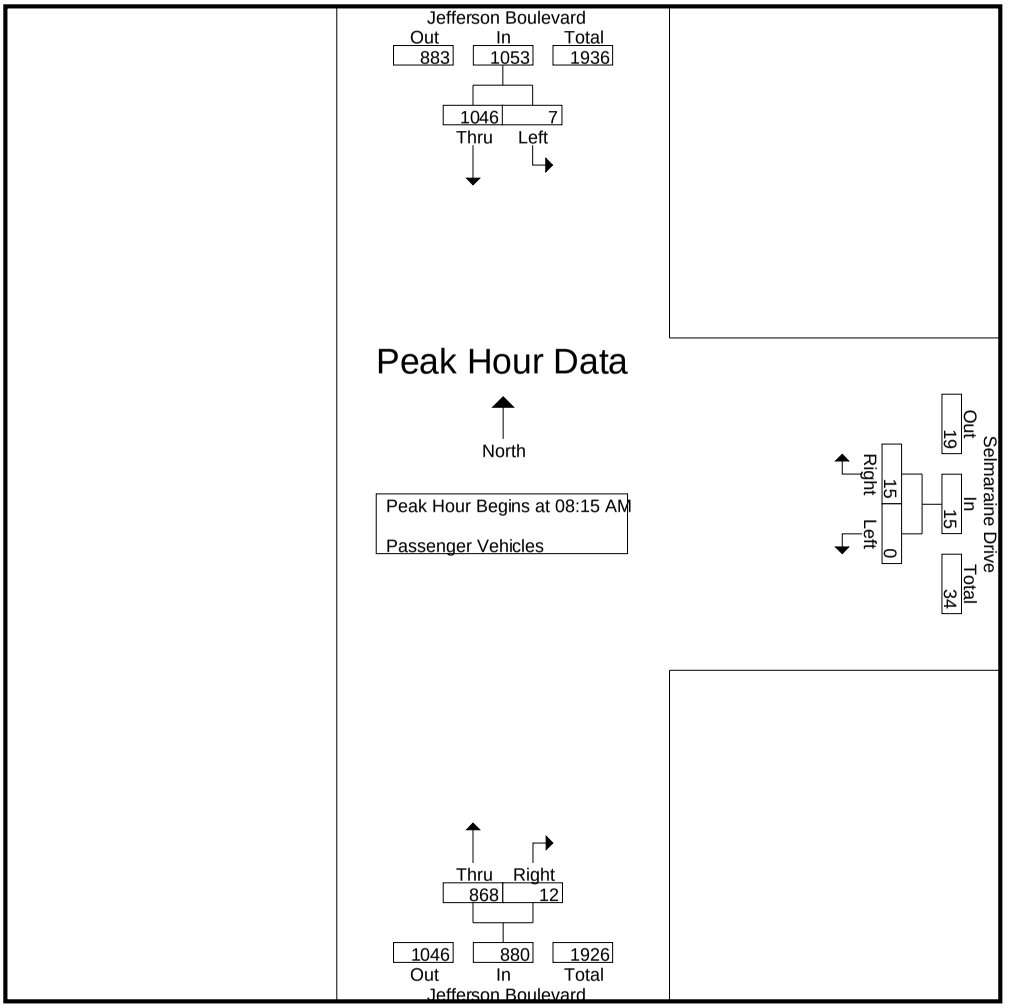

Peak Hour Analysis From 08:15 AM to 09:00 AM - Peak 1 of 1
Peak Hour for Each Approach Begins at:

	08:15 AM			08:15 AM			08:15 AM		
+0 mins.	1	235	236	0	**7**	**7**	210	**5**	215
+15 mins.	1	251	252	0	2	2	**227**	1	228
+30 mins.	2	**300**	**302**	0	4	4	226	3	**229**
+45 mins.	**3**	260	263	0	2	2	205	3	208
Total Volume	7	1046	1053	0	15	15	868	12	880
% App. Total	0.7	99.3		0	100		98.6	1.4	
PHF	.583	.872	.872	.000	.536	.536	.956	.600	.961

Counts Unlimited
PO Box 1178
Corona, CA 92878
(951) 268-6268

City of Culver City
N/S: Jefferson Boulevard
E/W: Selmaraine Drive
Weather: Clear

File Name : 01_CVC_Jefferson_Selmaraine AM
Site Code : 16619523
Start Date : 8/6/2019
Page No : 1

Groups Printed- Dual Wheeled

	Jefferson Boulevard Southbound			Selmaraine Drive Westbound			Jefferson Boulevard Northbound			
Start Time	Left	Thru	App. Total	Left	Right	App. Total	Thru	Right	App. Total	Int. Total
07:00 AM	1	1	2	0	1	1	3	0	3	6
07:15 AM	0	5	5	0	0	0	1	0	1	6
07:30 AM	0	5	5	0	1	1	4	0	4	10
07:45 AM	0	6	6	0	0	0	4	0	4	10
Total	1	17	18	0	2	2	12	0	12	32
08:00 AM	1	4	5	0	0	0	3	0	3	8
08:15 AM	0	6	6	0	3	3	6	1	7	16
08:30 AM	0	3	3	0	0	0	6	0	6	9
08:45 AM	0	4	4	0	0	0	3	0	3	7
Total	1	17	18	0	3	3	18	1	19	40
09:00 AM	1	6	7	0	0	0	2	0	2	9
09:15 AM	0	2	2	0	0	0	8	0	8	10
09:30 AM	0	2	2	0	0	0	8	0	8	10
09:45 AM	0	7	7	0	0	0	4	0	4	11
Total	1	17	18	0	0	0	22	0	22	40
Grand Total	3	51	54	0	5	5	52	1	53	112
Apprch %	5.6	94.4		0	100		98.1	1.9		
Total %	2.7	45.5	48.2	0	4.5	4.5	46.4	0.9	47.3	

	Jefferson Boulevard Southbound			Selmaraine Drive Westbound			Jefferson Boulevard Northbound			
Start Time	Left	Thru	App. Total	Left	Right	App. Total	Thru	Right	App. Total	Int. Total
Peak Hour Analysis From 08:15 AM to 09:00 AM - Peak 1 of 1										
Peak Hour for Entire Intersection Begins at 08:15 AM										
08:15 AM	0	**6**	6	0	**3**	**3**	**6**	**1**	**7**	**16**
08:30 AM	0	3	3	0	0	0	6	0	6	9
08:45 AM	0	4	4	0	0	0	3	0	3	7
09:00 AM	**1**	6	**7**	0	0	0	2	0	2	9
Total Volume	1	19	20	0	3	3	17	1	18	41
% App. Total	5	95		0	100		94.4	5.6		
PHF	.250	.792	.714	.000	.250	.250	.708	.250	.643	.641

Counts Unlimited
PO Box 1178
Corona, CA 92878
(951) 268-6268

City of Culver City
N/S: Jefferson Boulevard
E/W: Selmaraine Drive
Weather: Clear

File Name : 01_CVC_Jefferson_Selmaraine AM
Site Code : 16619523
Start Date : 8/6/2019
Page No : 2

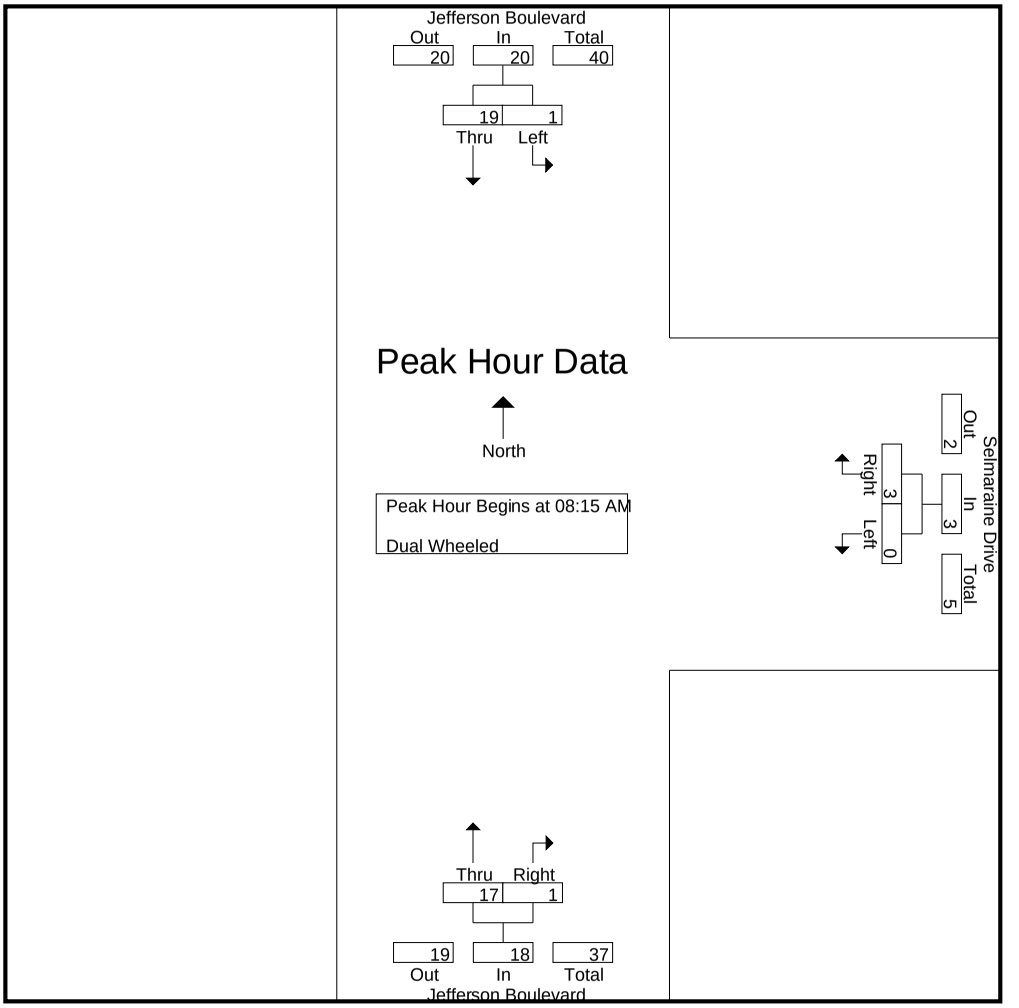

Peak Hour Analysis From 08:15 AM to 09:00 AM - Peak 1 of 1
Peak Hour for Each Approach Begins at:

	08:15 AM			08:15 AM			08:15 AM		
+0 mins.	0	**6**	6	0	**3**	**3**	**6**	**1**	**7**
+15 mins.	0	3	3	0	0	0	6	0	6
+30 mins.	0	4	4	0	0	0	3	0	3
+45 mins.	**1**	6	**7**	0	0	0	2	0	2
Total Volume	1	19	20	0	3	3	17	1	18
% App. Total	5	95		0	100		94.4	5.6	
PHF	.250	.792	.714	.000	.250	.250	.708	.250	.643

Counts Unlimited
PO Box 1178
Corona, CA 92878
(951) 268-6268

City of Culver City
N/S: Jefferson Boulevard
E/W: Selmaraine Drive
Weather: Clear

File Name : 01_CVC_Jefferson_Selmaraine AM
Site Code : 16619523
Start Date : 8/6/2019
Page No : 1

Groups Printed- Buses

	Jefferson Boulevard Southbound			Selmaraine Drive Westbound			Jefferson Boulevard Northbound			
Start Time	Left	Thru	App. Total	Left	Right	App. Total	Thru	Right	App. Total	Int. Total
07:00 AM	0	2	2	0	0	0	2	0	2	4
07:15 AM	0	3	3	0	0	0	1	0	1	4
07:30 AM	0	3	3	0	0	0	5	0	5	8
07:45 AM	0	1	1	0	0	0	2	0	2	3
Total	0	9	9	0	0	0	10	0	10	19
08:00 AM	0	2	2	0	0	0	1	0	1	3
08:15 AM	0	4	4	0	0	0	4	0	4	8
08:30 AM	0	2	2	0	0	0	2	0	2	4
08:45 AM	0	2	2	0	0	0	2	0	2	4
Total	0	10	10	0	0	0	9	0	9	19
09:00 AM	0	2	2	0	0	0	3	0	3	5
09:15 AM	0	3	3	0	0	0	1	0	1	4
09:30 AM	0	3	3	0	0	0	5	0	5	8
09:45 AM	0	1	1	0	0	0	3	0	3	4
Total	0	9	9	0	0	0	12	0	12	21
Grand Total	0	28	28	0	0	0	31	0	31	59
Apprch %	0	100		0	0		100	0		
Total %	0	47.5	47.5	0	0	0	52.5	0	52.5	

	Jefferson Boulevard Southbound			Selmaraine Drive Westbound			Jefferson Boulevard Northbound			
Start Time	Left	Thru	App. Total	Left	Right	App. Total	Thru	Right	App. Total	Int. Total
Peak Hour Analysis From 08:15 AM to 09:00 AM - Peak 1 of 1										
Peak Hour for Entire Intersection Begins at 08:15 AM										
08:15 AM	0	**4**	**4**	0	0	0	**4**	0	**4**	**8**
08:30 AM	0	2	2	0	0	0	2	0	2	4
08:45 AM	0	2	2	0	0	0	2	0	2	4
09:00 AM	0	2	2	0	0	0	3	0	3	5
Total Volume	0	10	10	0	0	0	11	0	11	21
% App. Total	0	100		0	0		100	0		
PHF	.000	.625	.625	.000	.000	.000	.688	.000	.688	.656

Counts Unlimited
PO Box 1178
Corona, CA 92878
(951) 268-6268

City of Culver City
N/S: Jefferson Boulevard
E/W: Selmaraine Drive
Weather: Clear

File Name : 01_CVC_Jefferson_Selmaraine AM
Site Code : 16619523
Start Date : 8/6/2019
Page No : 2

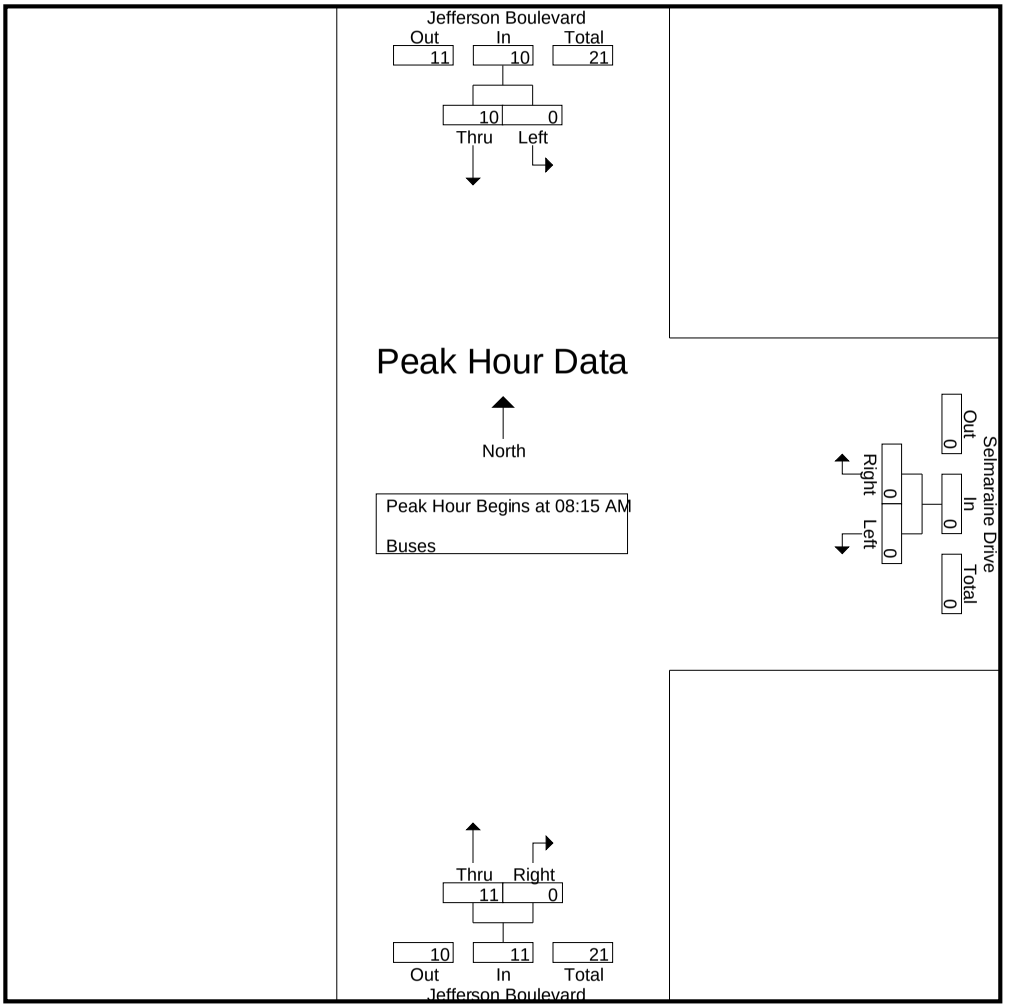

Peak Hour Analysis From 08:15 AM to 09:00 AM - Peak 1 of 1
Peak Hour for Each Approach Begins at:

	08:15 AM			08:15 AM			08:15 AM		
+0 mins.	0	**4**	**4**	0	0	0	**4**	0	**4**
+15 mins.	0	2	2	0	0	0	2	0	2
+30 mins.	0	2	2	0	0	0	2	0	2
+45 mins.	0	2	2	0	0	0	3	0	3
Total Volume	0	10	10	0	0	0	11	0	11
% App. Total	0	100		0	0		100	0	
PHF	.000	.625	.625	.000	.000	.000	.688	.000	.688

Counts Unlimited
PO Box 1178
Corona, CA 92878
(951) 268-6268

City of Culver City
N/S: Jefferson Boulevard
E/W: Selmaraine Drive
Weather: Clear

File Name : 01_CVC_Jefferson_Selmaraine PM
Site Code : 16619523
Start Date : 8/6/2019
Page No : 1

Groups Printed- Passenger Vehicles - Dual Wheeled - Buses

	Jefferson Boulevard Southbound			Selmaraine Drive Westbound			Jefferson Boulevard Northbound			
Start Time	Left	Thru	App. Total	Left	Right	App. Total	Thru	Right	App. Total	Int. Total
03:00 PM	6	238	244	0	2	2	235	0	235	481
03:15 PM	3	252	255	0	2	2	214	4	218	475
03:30 PM	1	262	263	1	4	5	262	1	263	531
03:45 PM	2	235	237	0	6	6	242	1	243	486
Total	12	987	999	1	14	15	953	6	959	1973
04:00 PM	1	290	291	0	4	4	303	1	304	599
04:15 PM	3	293	296	0	6	6	255	2	257	559
04:30 PM	3	261	264	0	6	6	305	5	310	580
04:45 PM	0	279	279	1	2	3	271	4	275	557
Total	7	1123	1130	1	18	19	1134	12	1146	2295
05:00 PM	5	293	298	0	5	5	273	2	275	578
05:15 PM	0	284	284	0	3	3	295	3	298	585
05:30 PM	3	324	327	0	5	5	307	1	308	640
05:45 PM	1	323	324	0	4	4	295	1	296	624
Total	9	1224	1233	0	17	17	1170	7	1177	2427
Grand Total	28	3334	3362	2	49	51	3257	25	3282	6695
Apprch %	0.8	99.2		3.9	96.1		99.2	0.8		
Total %	0.4	49.8	50.2	0	0.7	0.8	48.6	0.4	49	
Passenger Vehicles	23	3284	3307	1	48	49	3205	25	3230	6586
% Passenger Vehicles	82.1	98.5	98.4	50	98	96.1	98.4	100	98.4	98.4
Dual Wheeled	5	28	33	1	1	2	20	0	20	55
% Dual Wheeled	17.9	0.8	1	50	2	3.9	0.6	0	0.6	0.8
Buses	0	22	22	0	0	0	32	0	32	54
% Buses	0	0.7	0.7	0	0	0	1	0	1	0.8

	Jefferson Boulevard Southbound			Selmaraine Drive Westbound			Jefferson Boulevard Northbound			
Start Time	Left	Thru	App. Total	Left	Right	App. Total	Thru	Right	App. Total	Int. Total
Peak Hour Analysis From 03:00 PM to 05:45 PM - Peak 1 of 1										
Peak Hour for Entire Intersection Begins at 05:00 PM										
05:00 PM	**5**	293	298	0	**5**	**5**	273	2	275	578
05:15 PM	0	284	284	0	3	3	295	**3**	298	585
05:30 PM	3	**324**	**327**	0	5	5	**307**	1	**308**	**640**
05:45 PM	1	323	324	0	4	4	295	1	296	624
Total Volume	9	1224	1233	0	17	17	1170	7	1177	2427
% App. Total	0.7	99.3		0	100		99.4	0.6		
PHF	.450	.944	.943	.000	.850	.850	.953	.583	.955	.948

Counts Unlimited
PO Box 1178
Corona, CA 92878
(951) 268-6268

City of Culver City
N/S: Jefferson Boulevard
E/W: Selmaraine Drive
Weather: Clear

File Name : 01_CVC_Jefferson_Selmaraine PM
Site Code : 16619523
Start Date : 8/6/2019
Page No : 2

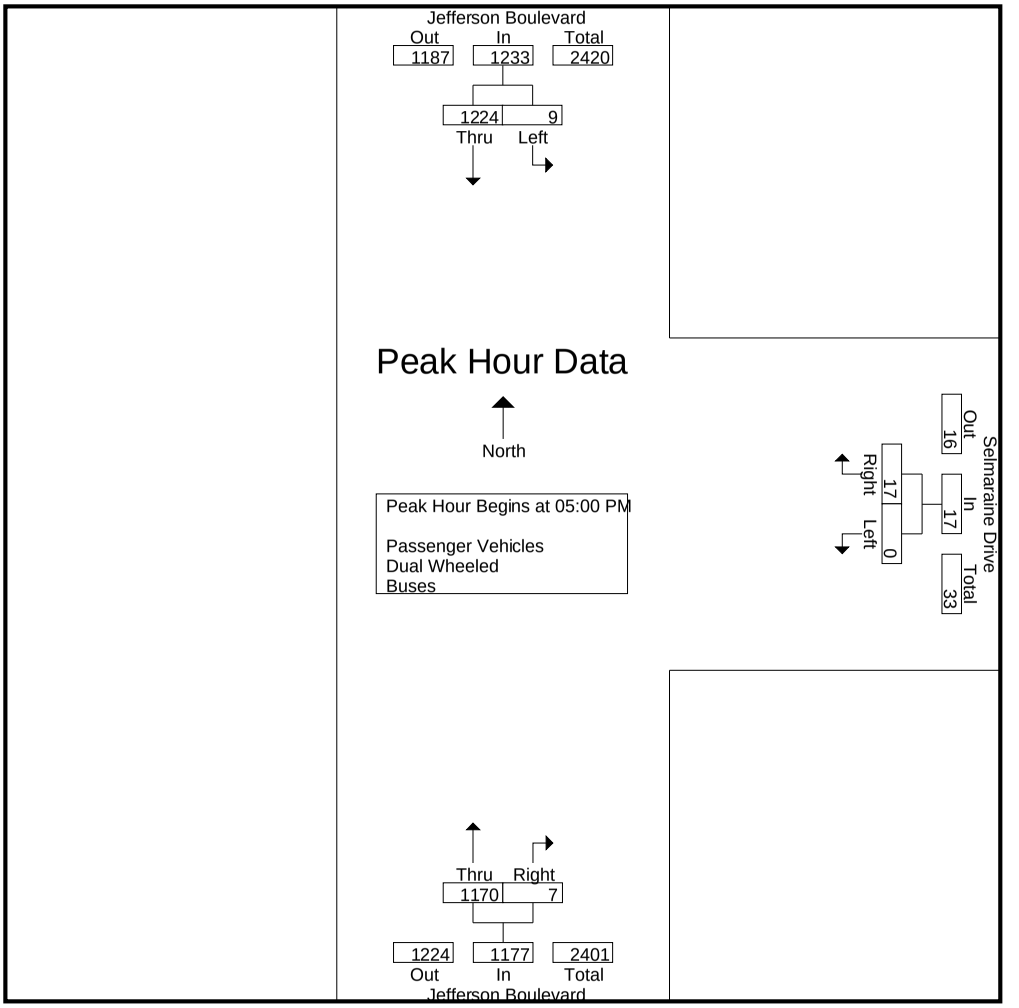

Peak Hour Analysis From 03:00 PM to 05:45 PM - Peak 1 of 1
Peak Hour for Each Approach Begins at:

	05:00 PM			03:45 PM			05:00 PM		
+0 mins.	**5**	293	298	0	**6**	**6**	273	2	275
+15 mins.	0	284	284	0	4	4	295	**3**	298
+30 mins.	3	**324**	**327**	0	6	6	**307**	1	**308**
+45 mins.	1	323	324	0	6	6	295	1	296
Total Volume	9	1224	1233	0	22	22	1170	7	1177
% App. Total	0.7	99.3		0	100		99.4	0.6	
PHF	.450	.944	.943	.000	.917	.917	.953	.583	.955

Counts Unlimited
PO Box 1178
Corona, CA 92878
(951) 268-6268

City of Culver City
N/S: Jefferson Boulevard
E/W: Selmaraine Drive
Weather: Clear

File Name : 01_CVC_Jefferson_Selmaraine PM
Site Code : 16619523
Start Date : 8/6/2019
Page No : 1

Groups Printed- Passenger Vehicles

	Jefferson Boulevard Southbound			Selmaraine Drive Westbound			Jefferson Boulevard Northbound			
Start Time	Left	Thru	App. Total	Left	Right	App. Total	Thru	Right	App. Total	Int. Total
03:00 PM	2	229	231	0	2	2	232	0	232	465
03:15 PM	3	248	251	0	2	2	209	4	213	466
03:30 PM	1	261	262	0	4	4	259	1	260	526
03:45 PM	2	231	233	0	6	6	237	1	238	477
Total	8	969	977	0	14	14	937	6	943	1934
04:00 PM	1	286	287	0	3	3	298	1	299	589
04:15 PM	2	287	289	0	6	6	252	2	254	549
04:30 PM	3	257	260	0	6	6	297	5	302	568
04:45 PM	0	275	275	1	2	3	267	4	271	549
Total	6	1105	1111	1	17	18	1114	12	1126	2255
05:00 PM	5	290	295	0	5	5	266	2	268	568
05:15 PM	0	280	280	0	3	3	293	3	296	579
05:30 PM	3	321	324	0	5	5	303	1	304	633
05:45 PM	1	319	320	0	4	4	292	1	293	617
Total	9	1210	1219	0	17	17	1154	7	1161	2397
Grand Total	23	3284	3307	1	48	49	3205	25	3230	6586
Apprch %	0.7	99.3		2	98		99.2	0.8		
Total %	0.3	49.9	50.2	0	0.7	0.7	48.7	0.4	49	

	Jefferson Boulevard Southbound			Selmaraine Drive Westbound			Jefferson Boulevard Northbound			
Start Time	Left	Thru	App. Total	Left	Right	App. Total	Thru	Right	App. Total	Int. Total
Peak Hour Analysis From 05:00 PM to 05:45 PM - Peak 1 of 1										
Peak Hour for Entire Intersection Begins at 05:00 PM										
05:00 PM	**5**	290	295	0	**5**	**5**	266	2	268	568
05:15 PM	0	280	280	0	3	3	293	**3**	296	579
05:30 PM	3	**321**	**324**	0	5	5	**303**	1	**304**	**633**
05:45 PM	1	319	320	0	4	4	292	1	293	617
Total Volume	9	1210	1219	0	17	17	1154	7	1161	2397
% App. Total	0.7	99.3		0	100		99.4	0.6		
PHF	.450	.942	.941	.000	.850	.850	.952	.583	.955	.947

Counts Unlimited
PO Box 1178
Corona, CA 92878
(951) 268-6268

City of Culver City
N/S: Jefferson Boulevard
E/W: Selmaraine Drive
Weather: Clear

File Name : 01_CVC_Jefferson_Selmaraine PM
Site Code : 16619523
Start Date : 8/6/2019
Page No : 2

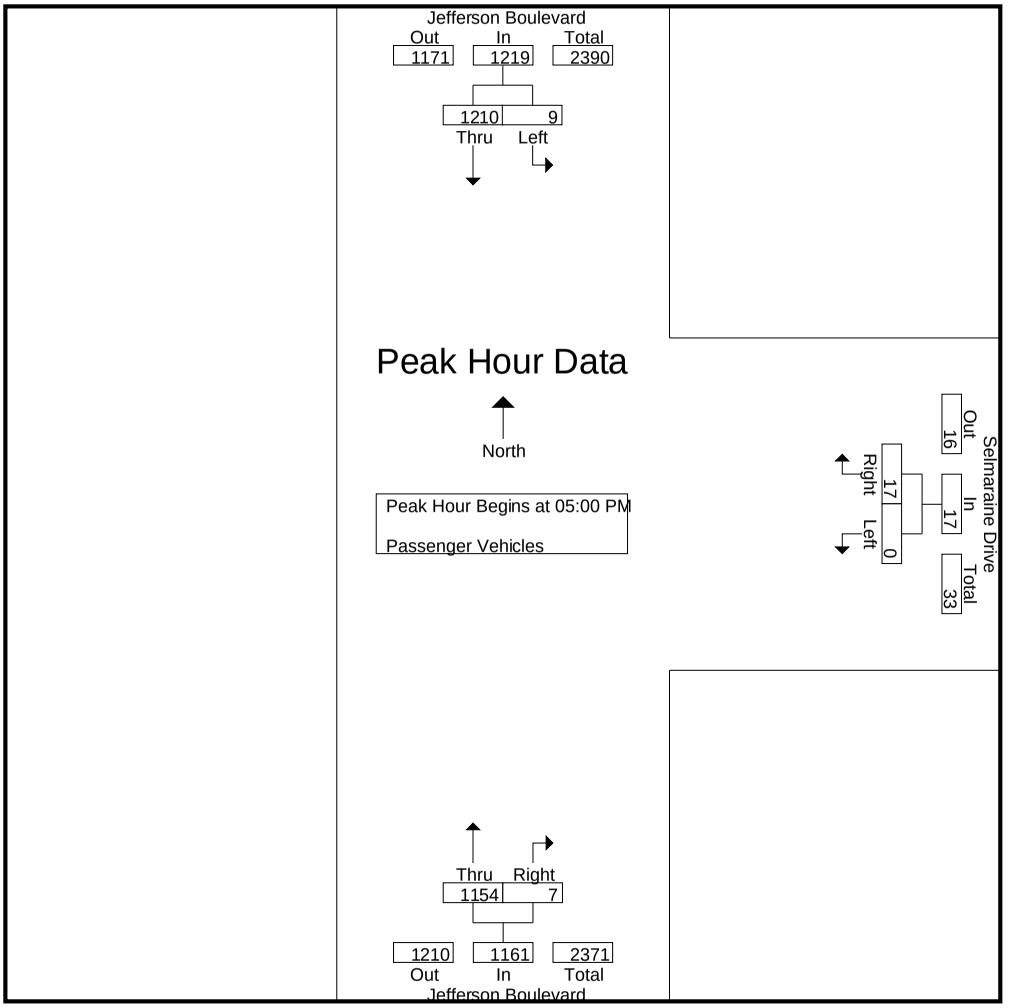

Peak Hour Analysis From 05:00 PM to 05:45 PM - Peak 1 of 1
Peak Hour for Each Approach Begins at:

	05:00 PM			05:00 PM			05:00 PM		
+0 mins.	**5**	290	295	0	**5**	**5**	266	2	268
+15 mins.	0	280	280	0	3	3	293	**3**	296
+30 mins.	3	**321**	**324**	0	5	5	**303**	1	**304**
+45 mins.	1	319	320	0	4	4	292	1	293
Total Volume	9	1210	1219	0	17	17	1154	7	1161
% App. Total	0.7	99.3		0	100		99.4	0.6	
PHF	.450	.942	.941	.000	.850	.850	.952	.583	.955

Counts Unlimited
PO Box 1178
Corona, CA 92878
(951) 268-6268

City of Culver City
N/S: Jefferson Boulevard
E/W: Selmaraine Drive
Weather: Clear

File Name : 01_CVC_Jefferson_Selmaraine PM
Site Code : 16619523
Start Date : 8/6/2019
Page No : 1

Groups Printed- Dual Wheeled

	Jefferson Boulevard Southbound			Selmaraine Drive Westbound			Jefferson Boulevard Northbound			
Start Time	Left	Thru	App. Total	Left	Right	App. Total	Thru	Right	App. Total	Int. Total
03:00 PM	4	6	10	0	0	0	1	0	1	11
03:15 PM	0	2	2	0	0	0	3	0	3	5
03:30 PM	0	1	1	1	0	1	1	0	1	3
03:45 PM	0	1	1	0	0	0	0	0	0	1
Total	4	10	14	1	0	1	5	0	5	20
04:00 PM	0	3	3	0	1	1	2	0	2	6
04:15 PM	1	4	5	0	0	0	2	0	2	7
04:30 PM	0	3	3	0	0	0	4	0	4	7
04:45 PM	0	1	1	0	0	0	2	0	2	3
Total	1	11	12	0	1	1	10	0	10	23
05:00 PM	0	2	2	0	0	0	3	0	3	5
05:15 PM	0	0	0	0	0	0	0	0	0	0
05:30 PM	0	2	2	0	0	0	1	0	1	3
05:45 PM	0	3	3	0	0	0	1	0	1	4
Total	0	7	7	0	0	0	5	0	5	12
Grand Total	5	28	33	1	1	2	20	0	20	55
Apprch %	15.2	84.8		50	50		100	0		
Total %	9.1	50.9	60	1.8	1.8	3.6	36.4	0	36.4	

	Jefferson Boulevard Southbound			Selmaraine Drive Westbound			Jefferson Boulevard Northbound			
Start Time	Left	Thru	App. Total	Left	Right	App. Total	Thru	Right	App. Total	Int. Total
Peak Hour Analysis From 05:00 PM to 05:45 PM - Peak 1 of 1										
Peak Hour for Entire Intersection Begins at 05:00 PM										
05:00 PM	0	2	2	0	0	0	**3**	0	**3**	**5**
05:15 PM	0	0	0	0	0	0	0	0	0	0
05:30 PM	0	2	2	0	0	0	1	0	1	3
05:45 PM	0	**3**	**3**	0	0	0	1	0	1	4
Total Volume	0	7	7	0	0	0	5	0	5	12
% App. Total	0	100		0	0		100	0		
PHF	.000	.583	.583	.000	.000	.000	.417	.000	.417	.600

Counts Unlimited
PO Box 1178
Corona, CA 92878
(951) 268-6268

City of Culver City
N/S: Jefferson Boulevard
E/W: Selmaraine Drive
Weather: Clear

File Name : 01_CVC_Jefferson_Selmaraine PM
Site Code : 16619523
Start Date : 8/6/2019
Page No : 2

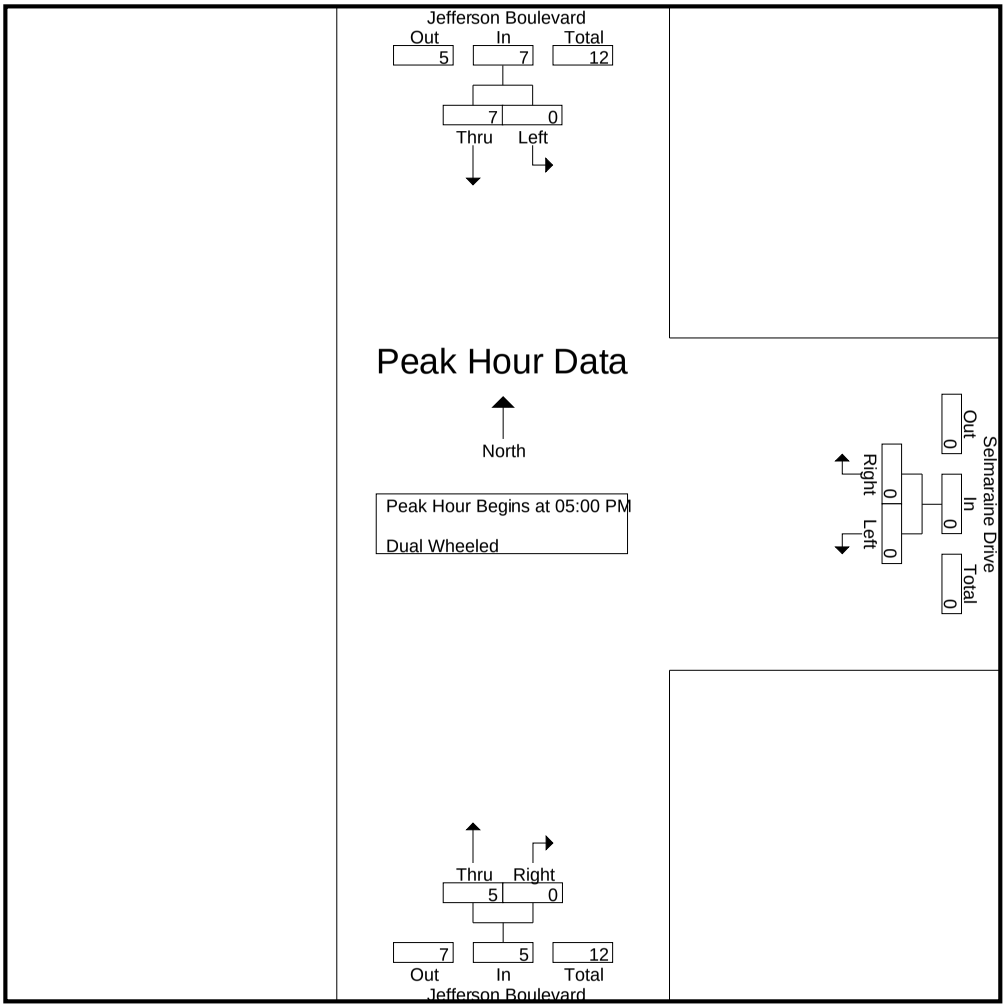

Peak Hour Analysis From 05:00 PM to 05:45 PM - Peak 1 of 1
Peak Hour for Each Approach Begins at:

	05:00 PM			05:00 PM			05:00 PM		
+0 mins.	0	2	2	0	0	0	**3**	0	**3**
+15 mins.	0	0	0	0	0	0	0	0	0
+30 mins.	0	2	2	0	0	0	1	0	1
+45 mins.	0	**3**	**3**	0	0	0	1	0	1
Total Volume	0	7	7	0	0	0	5	0	5
% App. Total	0	100		0	0		100	0	
PHF	.000	.583	.583	.000	.000	.000	.417	.000	.417

Counts Unlimited
PO Box 1178
Corona, CA 92878
(951) 268-6268

City of Culver City
N/S: Jefferson Boulevard
E/W: Selmaraine Drive
Weather: Clear

File Name : 01_CVC_Jefferson_Selmaraine PM
Site Code : 16619523
Start Date : 8/6/2019
Page No : 1

Groups Printed- Buses

	Jefferson Boulevard Southbound			Selmaraine Drive Westbound			Jefferson Boulevard Northbound			
Start Time	Left	Thru	App. Total	Left	Right	App. Total	Thru	Right	App. Total	Int. Total
03:00 PM	0	3	3	0	0	0	2	0	2	5
03:15 PM	0	2	2	0	0	0	2	0	2	4
03:30 PM	0	0	0	0	0	0	2	0	2	2
03:45 PM	0	3	3	0	0	0	5	0	5	8
Total	0	8	8	0	0	0	11	0	11	19
04:00 PM	0	1	1	0	0	0	3	0	3	4
04:15 PM	0	2	2	0	0	0	1	0	1	3
04:30 PM	0	1	1	0	0	0	4	0	4	5
04:45 PM	0	3	3	0	0	0	2	0	2	5
Total	0	7	7	0	0	0	10	0	10	17
05:00 PM	0	1	1	0	0	0	4	0	4	5
05:15 PM	0	4	4	0	0	0	2	0	2	6
05:30 PM	0	1	1	0	0	0	3	0	3	4
05:45 PM	0	1	1	0	0	0	2	0	2	3
Total	0	7	7	0	0	0	11	0	11	18
Grand Total	0	22	22	0	0	0	32	0	32	54
Apprch %	0	100		0	0		100	0		
Total %	0	40.7	40.7	0	0	0	59.3	0	59.3	

	Jefferson Boulevard Southbound			Selmaraine Drive Westbound			Jefferson Boulevard Northbound			
Start Time	Left	Thru	App. Total	Left	Right	App. Total	Thru	Right	App. Total	Int. Total
Peak Hour Analysis From 05:00 PM to 05:45 PM - Peak 1 of 1										
Peak Hour for Entire Intersection Begins at 05:00 PM										
05:00 PM	0	1	1	0	0	0	**4**	0	**4**	5
05:15 PM	0	**4**	**4**	0	0	0	2	0	2	**6**
05:30 PM	0	1	1	0	0	0	3	0	3	4
05:45 PM	0	1	1	0	0	0	2	0	2	3
Total Volume	0	7	7	0	0	0	11	0	11	18
% App. Total	0	100		0	0		100	0		
PHF	.000	.438	.438	.000	.000	.000	.688	.000	.688	.750

Counts Unlimited
PO Box 1178
Corona, CA 92878
(951) 268-6268

City of Culver City
N/S: Jefferson Boulevard
E/W: Selmaraine Drive
Weather: Clear

File Name : 01_CVC_Jefferson_Selmaraine PM
Site Code : 16619523
Start Date : 8/6/2019
Page No : 2

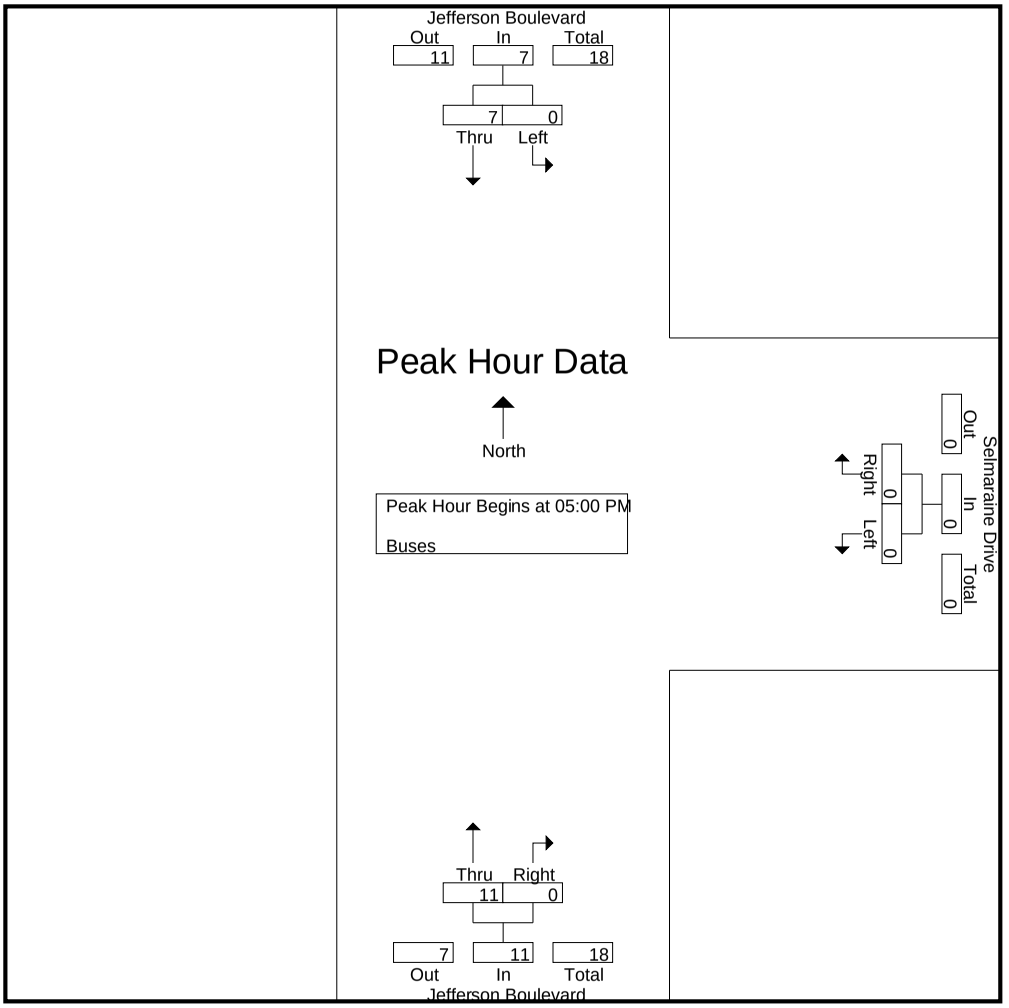

Peak Hour Analysis From 05:00 PM to 05:45 PM - Peak 1 of 1
Peak Hour for Each Approach Begins at:

	05:00 PM			05:00 PM			05:00 PM		
+0 mins.	0	1	1	0	0	0	**4**	0	**4**
+15 mins.	0	**4**	**4**	0	0	0	2	0	2
+30 mins.	0	1	1	0	0	0	3	0	3
+45 mins.	0	1	1	0	0	0	2	0	2
Total Volume	0	7	7	0	0	0	11	0	11
% App. Total	0	100		0	0		100	0	
PHF	.000	.438	.438	.000	.000	.000	.688	.000	.688

City of Los Angeles
Department of Transportation

BICYCLE COUNT SUMMARY

STREET:

North/South:	Jefferson Boulevard				
East/West:	Selmaraine Drive				
Day:	Tuesday	Date:	8/6/2019	Weather:	CLEAR
School Day:	Yes	District:	City of Culver City	I/S Code:	0
Hours:	7-10 AM, 3-6 PM	Staff:	CUI		

NORTHBOUND Approach

Hours	Lt	Th	Rt	Total
7-8	0	0	0	0
8-9	0	0	0	0
9-10	0	2	0	2
3-4	0	3	1	4
4-5	0	1	0	1
5-6	0	2	0	2
TOTAL	0	8	1	9

SOUTHBOUND Approach

Hours	Lt	Th	Rt	Total
7-8	0	0	0	0
8-9	0	2	0	2
9-10	0	2	0	2
3-4	1	1	0	2
4-5	0	1	0	1
5-6	0	0	0	0
TOTAL	1	6	0	7

TOTAL

Hours	N-S
7-8	0
8-9	2
9-10	4
3-4	6
4-5	2
5-6	2
TOTAL	16

EASTBOUND Approach

Hours	Lt	Th	Rt	Total
7-8	0	0	0	0
8-9	0	0	0	0
9-10	0	0	0	0
3-4	0	0	0	0
4-5	0	0	0	0
5-6	0	0	0	0
TOTAL	0	0	0	0

WESTBOUND Approach

Hours	Lt	Th	Rt	Total
7-8	0	0	0	0
8-9	0	0	0	0
9-10	0	0	0	0
3-4	0	0	0	0
4-5	0	0	0	0
5-6	0	0	0	0
TOTAL	0	0	0	0

TOTAL

Hours	E-W
7-8	0
8-9	0
9-10	0
3-4	0
4-5	0
5-6	0
TOTAL	0

REMARKS (6 hour total):

	NB	SB	EB	WB	TOTAL
- Female Riders	0	0	0	0	0
- No helmet riders	7	6	0	1	14
- Sidewalk Riding	3	5	0	1	9
- Wrong way riding	0	4	0	1	5

NB: Northbound, **SB**: Southbound, **EB**: Eastbound, **WB**: Westbound, **I/S**: Intersection

Source: CUI

LADOT 2015 CMP

City of Los Angeles
Department of Transportation

PEDESTRIAN COUNT SUMMARY

STREET:					
North/South:	Jefferson Boulevard				
East/West:	Selmaraine Drive				
Day:	Tuesday	Date:	August 6, 2019	Weather:	CLEAR
School Day:	YES	District:	City of Culver City	I/S Code:	0
Hours:	7-10 AM, 3-6 PM	Staff:	CUI		

AM PEAK PERIOD

15 Min. Interval	N-LEG	S-LEG	E-LEG	W-LEG	TOTAL
7:00-7:15	0	0	0	0	0
7:15-7:30	0	0	2	0	2
7:30-7:45	0	0	0	0	0
7:45-8:00	0	0	3	0	3
8:00-8:15	0	0	3	0	3
8:15-8:30	0	0	1	0	1
8:30-8:45	0	0	2	0	2
8:45-9:00	0	0	1	0	1
9:00-9:15	0	0	1	0	1
9:15-9:30	0	0	4	0	4
9:30-9:45	1	0	1	0	2
9:45-10:00	1	1	4	0	6
Hours					
7 - 8	0	0	5	0	5
8 - 9	0	0	7	0	7
9 - 10	2	1	10	0	13
TOTAL	2	1	22	0	25

PM PEAK PERIOD

15 Min. Interval	N-LEG	S-LEG	E-LEG	W-LEG	TOTAL
3:00-3:15	0	0	0	0	0
3:15-3:30	0	0	8	0	8
3:30-3:45	0	0	0	0	0
3:45-4:00	0	0	2	0	2
4:00-4:15	0	0	10	0	10
4:15-4:30	0	0	4	0	4
4:30-4:45	0	0	4	0	4
4:45-5:00	0	0	8	0	8
5:00-5:15	0	0	4	0	4
5:15-5:30	0	0	0	0	0
5:30-5:45	0	0	2	0	2
5:45-6:00	1	0	8	0	9
Hours					
3 - 4	0	0	10	0	10
4 - 5	0	0	26	0	26
5 - 6	1	0	14	0	15
	1	0	50	0	51

REMARKS (6 hour total):

	N-LEG	S-LEG	E-LEG	W-LEG	TOTAL
- Wheelchair/special needs assistance	0	0	0	0	0
- Skateboard/scooter	0	0	1	0	1

N: North, **S**: South, **E**: East, **W**: West, **I/S**: Intersection

Source: LADOT 2015 CMP

APPENDIX B

STUDY INTERSECTION GEOMETRICS &

TRAFFIC CONTROL CONDTIONS

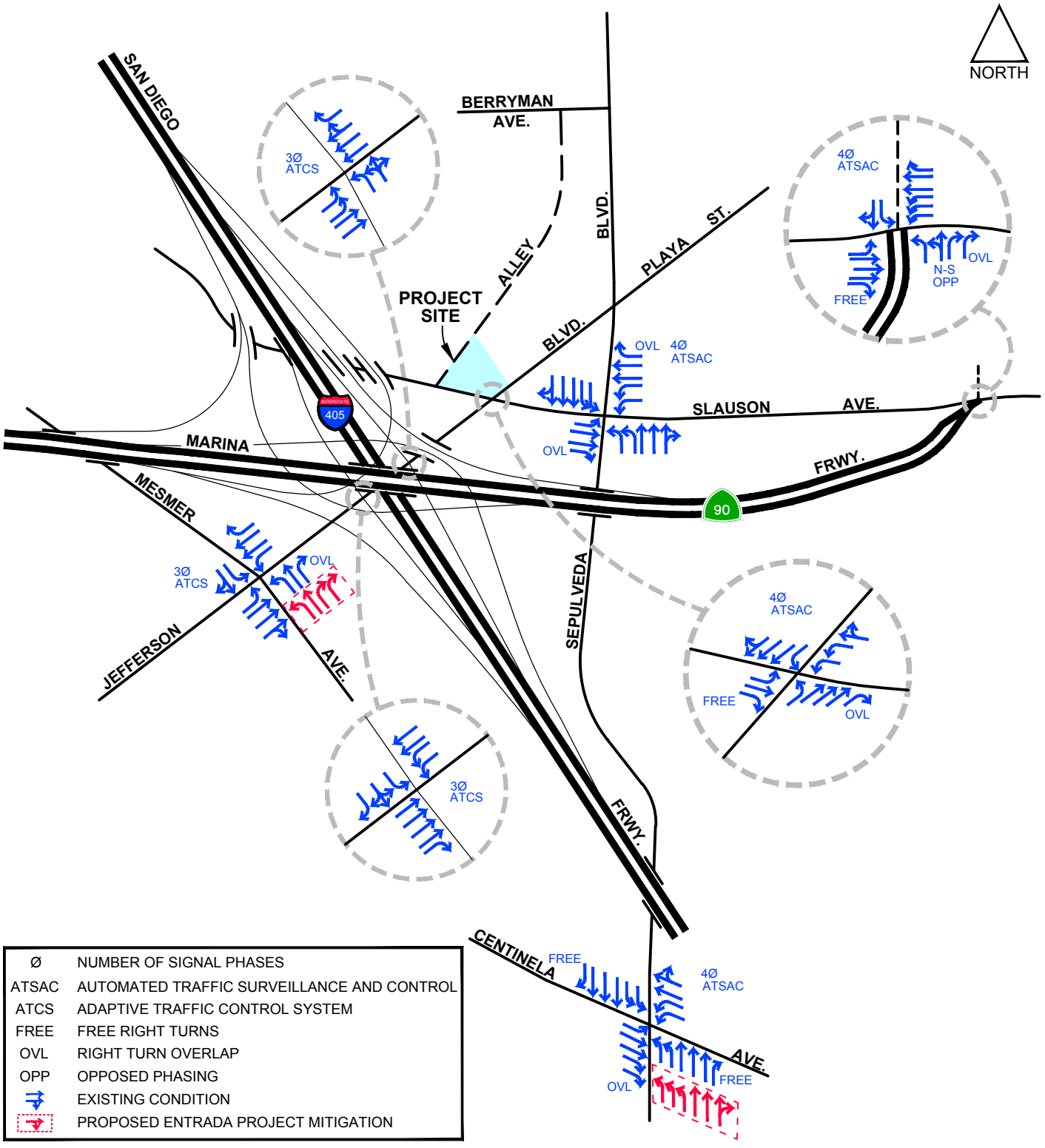

APPENDIX B

6/27/2019

FN:Jefferson&SlausonHotel\LANECONFIG

STUDY INTERSECTION GEOMETRICS & TRAFFIC CONTROL CONDITIONS

CRAIN & ASSOCIATES
Transportation Planning
Traffic Engineering
300 Corporate Pointe, Suite 470
Culver City, California 90230
PH (310) 473 6508 F (310) 444 9771
www.crainandassociates.com

APPENDIX C

CMA LOS CALCULATION WORKSHEETS

Level of Service Workheet
(Circular 212 Method)

I/S #:	North-South Street:	Mesmer Avenue	Year of Count:	2018	Ambient Growth: (%):	1	Conducted by:	HM	Date:	6/27/2019
1	East-West Street:	Jefferson Boulevard	Projection Year:	2024	Peak Hour:	AM	Reviewed by:	RK	Project:	The Jeff Hotel Project

	EXISTING CONDITION			EXISTING PLUS PROJECT			FUTURE CONDITION W/O PROJECT				FUTURE CONDITION W/ PROJECT				FUTURE W/ PROJECT W/ MITIGATION			
No. of Phases			3			3			3				3				3	
Opposed Ø'ing: N/S-1, E/W-2 or Both-3?			0			0			0				0				0	
Right Turns: FREE-1, NRTOR-2 or OLA-3?	NB-- 3	SB--	0	NB-- 3	SB--	0	NB-- 3	SB--	0		NB-- 3	SB--	0		NB-- 3	SB--	0	
	EB-- 0	WB--	0	EB-- 0	WB--	0	EB-- 0	WB--	0		EB-- 0	WB--	0		EB-- 0	WB--	0	
ATSAC-1 or ATSAC+ATCS-2?			2			2			2				2				2	
Override Capacity			0			0			0				0				0	

	MOVEMENT	Volume	No. of Lanes	Lane Volume	Project Traffic	Total Volume	Lane Volume	Added Volume	Total Volume	No. of Lanes	Lane Volume	Added Volume	Total Volume	No. of Lanes	Lane Volume	Added Volume	Total Volume	No. of Lanes	Lane Volume
NORTHBOUND	Left	45	1	45	0	45	45	0	48	1	48	0	48	1	48	0	48	1	48
	Left-Through		0							0				0				0	
	Through	85	1	85	0	85	85	0	90	1	90	0	90	1	90	0	90	1	90
	Through-Right		0							0				0				0	
	Right	374	1	0	0	374	0	37	434	2	0	0	434	2	0	0	434	2	0
	Left-Through-Right		0							0				0				0	
	Left-Right		0							0				0				0	
SOUTHBOUND	Left	81	1	81	0	81	81	0	86	1	86	0	86	1	86	0	86	1	86
	Left-Through		0							0				0				0	
	Through	50	0	72	0	50	72	0	53	0	76	0	53	0	76	0	53	0	76
	Through-Right		1							1				1				1	
	Right	22	0	0	0	22	0	0	23	0	0	0	23	0	0	0	23	0	0
	Left-Through-Right		0							0				0				0	
	Left-Right		0							0				0				0	
EASTBOUND	Left	21	1	21	0	21	21	0	22	1	22	0	22	1	22	0	22	1	22
	Left-Through		0							0				0				0	
	Through	911	2	321	8	919	324	63	1030	2	362	8	1038	2	365	0	1038	2	365
	Through-Right		1							1				1				1	
	Right	53	0	53	0	53	53	1	57	0	57	0	57	0	57	0	57	0	57
	Left-Through-Right		0							0				0				0	
	Left-Right		0							0				0				0	
WESTBOUND	Left	467	1	467	0	467	467	99	595	1	595	0	595	1	595	0	595	1	595
	Left-Through		0							0				0				0	
	Through	1059	2	530	6	1065	533	145	1269	2	635	6	1275	2	638	0	1275	2	638
	Through-Right		0							0				0				0	
	Right	98	1	58	0	98	58	0	104	1	61	0	104	1	61	0	104	1	61
	Left-Through-Right		0							0				0				0	
	Left-Right		0							0				0				0	
CRITICAL VOLUMES		North-South:		166	North-South:		166	North-South:			176	North-South:			176	North-South:			176
		East-West:		788	East-West:		791	East-West:			957	East-West:			960	East-West:			960
		SUM:		954	SUM:		957	SUM:			1133	SUM:			1136	SUM:			1136
VOLUME/CAPACITY (V/C) RATIO:				0.669			0.672				0.795				0.797				0.797
V/C LESS ATSAC/ATCS ADJUSTMENT:				0.569			0.572				0.695				0.697				0.697
LEVEL OF SERVICE (LOS):				A			A				B				B				B

REMARKS:

Version: 1i Beta; 8/4/2011

PROJECT IMPACT

Change in v/c due to project:	0.002	Δv/c after mitigation:	0.002
Significant impacted?	NO	Fully mitigated?	N/A

Level of Service Worksheet
(Circular 212 Method)

I/S #:	North-South Street:	Mesmer Avenue	Year of Count:	2018	Ambient Growth: (%):	1	Conducted by:	HM	Date:	6/27/2019
1	East-West Street:	Jefferson Boulevard	Projection Year:	2024	Peak Hour:	PM	Reviewed by:	RK	Project:	The Jeff Hotel Project

	EXISTING CONDITION			EXISTING PLUS PROJECT			FUTURE CONDITION W/O PROJECT				FUTURE CONDITION W/ PROJECT				FUTURE W/ PROJECT W/ MITIGATION			
No. of Phases			3			3			3				3				3	
Opposed Ø'ing: N/S-1, E/W-2 or Both-3?			0			0			0				0				0	
Right Turns: FREE-1, NRTOR-2 or OLA-3?	NB-- 3	SB--	0	NB-- 3	SB--	0	NB-- 3	SB--	0		NB-- 3	SB--	0		NB-- 3	SB--	0	
	EB-- 0	WB--	0	EB-- 0	WB--	0	EB-- 0	WB--	0		EB-- 0	WB--	0		EB-- 0	WB--	0	
ATSAC-1 or ATSAC+ATCS-2?			2			2			2				2				2	
Override Capacity			0			0			0				0				0	

	MOVEMENT	Volume	No. of Lanes	Lane Volume	Project Traffic	Total Volume	Lane Volume	Added Volume	Total Volume	No. of Lanes	Lane Volume	Added Volume	Total Volume	No. of Lanes	Lane Volume	Added Volume	Total Volume	No. of Lanes	Lane Volume
NORTHBOUND	Left	59	1	59	0	59	59	1	64	1	64	0	64	1	64	0	64	1	64
	Left-Through		0							0				0				0	
	Through	55	1	55	0	55	55	1	59	1	**59**	0	59	1	**59**	0	59	1	**59**
	Through-Right		0							0				0				0	
	Right	297	1	**97**	0	297	**97**	93	408	2	0	0	408	2	0	0	408	2	0
	Left-Through-Right		0							0				0				0	
	Left-Right		0							0				0				0	
SOUTHBOUND	Left	172	1	**172**	0	172	**172**	0	183	1	**183**	0	183	1	**183**	0	183	1	**183**
	Left-Through		0							0				0				0	
	Through	131	0	147	0	131	147	0	139	0	156	0	139	0	156	0	139	0	156
	Through-Right		1							1				1				1	
	Right	16	0	0	0	16	0	0	17	0	0	0	17	0	0	0	17	0	0
	Left-Through-Right		0							0				0				0	
	Left-Right		0							0				0				0	
EASTBOUND	Left	15	1	15	0	15	15	0	16	1	16	0	16	1	16	0	16	1	16
	Left-Through		0							0				0				0	
	Through	1108	2	**387**	7	1115	**389**	186	1362	2	**473**	7	1369	2	**475**	0	1369	2	**475**
	Through-Right		1							1				1				1	
	Right	53	0	53	0	53	53	0	56	0	56	0	56	0	56	0	56	0	56
	Left-Through-Right		0							0				0				0	
	Left-Right		0							0				0				0	
WESTBOUND	Left	200	1	**200**	0	200	**200**	30	242	1	**242**	0	242	1	**242**	0	242	1	**242**
	Left-Through		0							0				0				0	
	Through	753	2	377	6	759	380	88	887	2	444	6	893	2	447	0	893	2	447
	Through-Right		0							0				0				0	
	Right	53	1	0	0	53	0	0	56	1	0	0	56	1	0	0	56	1	0
	Left-Through-Right		0							0				0				0	
	Left-Right		0							0				0				0	
CRITICAL VOLUMES			*North-South:*	269		*North-South:*	269		*North-South:*		242		*North-South:*		242		*North-South:*		242
			East-West:	587		*East-West:*	589		*East-West:*		715		*East-West:*		717		*East-West:*		717
			SUM:	856		*SUM:*	858		*SUM:*		957		*SUM:*		959		*SUM:*		959
VOLUME/CAPACITY *(V/C)* RATIO:				0.601			0.602				0.672				0.673				0.673
V/C LESS ATSAC/ATCS ADJUSTMENT:				0.501			0.502				0.572				0.573				0.573
LEVEL OF SERVICE (LOS):				A			A				A				A				A

REMARKS:

Version: 1i Beta; 8/4/2011

PROJECT IMPACT

Change in *v/c* due to project: 0.001 — *Δv/c* after mitigation: 0.001

Significant impacted? NO — Fully mitigated? N/A

Level of Service Workheet
(Circular 212 Method)

I/S #:	North-South Street:	I-405 Freeway SB Ramps	Year of Count:	2018	Ambient Growth: (%):	1	Conducted by:	HM	Date:	6/27/2019
2	East-West Street:	Jefferson Boulevard	Projection Year:	2024	Peak Hour:	AM	Reviewed by:	RK	Project:	The Jeff Hotel Project

No. of Phases			0				0				0				0				0
Opposed Ø'ing: N/S-1, E/W-2 or Both-3?			0				0				0				0				0
Right Turns: FREE-1, NRTOR-2 or OLA-3?	NB--	0	SB-- 0	NB--	0	SB-- 0	NB--	0	SB-- 0	NB--	0	SB-- 0	NB--	0	SB-- 0	NB--	0	SB-- 0
	EB--	0	WB-- 0	EB--	0	WB-- 0	EB--	0	WB-- 0	EB--	0	WB-- 0	EB--	0	WB-- 0	EB--	0	WB-- 0
ATSAC-1 or ATSAC+ATCS-2?			2			2			2			2			2			2
Override Capacity			1200			1200			1200			1200			1200			1200

MOVEMENT		EXISTING CONDITION			EXISTING PLUS PROJECT			FUTURE CONDITION W/O PROJECT				FUTURE CONDITION W/ PROJECT				FUTURE W/ PROJECT W/ MITIGATION			
		Volume	No. of Lanes	Lane Volume	Project Traffic	Total Volume	Lane Volume	Added Volume	Total Volume	No. of Lanes	Lane Volume	Added Volume	Total Volume	No. of Lanes	Lane Volume	Added Volume	Total Volume	No. of Lanes	Lane Volume
NORTHBOUND	Left	0	0	**0**	0	0	**0**	0	0	0	**0**	0	0	0	**0**	0	0	0	**0**
	Left-Through		0							0				0				0	
	Through	0	0	0	0	0	0	0	0	0	0	0	0	0	0	0	0	0	0
	Through-Right		0							0				0				0	
	Right	0	0	0	0	0	0	0	0	0	0	0	0	0	0	0	0	0	0
	Left-Through-Right		0							0				0				0	
	Left-Right		0							0				0				0	
SOUTHBOUND	Left	90	1	90	5	95	95	10	106	1	106	5	111	1	111	0	111	1	111
	Left-Through		0							0				0				0	
	Through	3	0	**474**	0	3	**474**	0	3	0	**568**	0	3	0	**568**	0	3	0	**568**
	Through-Right		0							0				0				0	
	Right	944	1	0	0	944	0	131	1133	1	0	0	1133	1	0	0	1133	1	0
	Left-Through-Right		1							1				1				1	
	Left-Right		0							0				0				0	
EASTBOUND	Left	539	2	**296**	0	539	**296**	51	623	2	**343**	0	623	2	**343**	0	623	2	**343**
	Left-Through		0							0				0				0	
	Through	487	2	244	8	495	248	35	552	2	276	8	560	2	280	0	560	2	280
	Through-Right		0							0				0				0	
	Right	334	1	334	0	334	334	15	370	1	370	0	370	1	370	0	370	1	370
	Left-Through-Right		0							0				0				0	
	Left-Right		0							0				0				0	
WESTBOUND	Left	365	2	201	6	371	204	5	392	2	216	6	398	2	219	0	398	2	219
	Left-Through		0							0				0				0	
	Through	804	2	**402**	5	809	**405**	113	966	2	**483**	5	971	2	**486**	0	971	2	**486**
	Through-Right		0							0				0				0	
	Right	0	0	0	0	0	0	0	0	0	0	0	0	0	0	0	0	0	0
	Left-Through-Right		0							0				0				0	
	Left-Right		0							0				0				0	
CRITICAL VOLUMES		North-South:		474	North-South:		474	North-South:			568	North-South:			568	North-South:			568
		East-West:		698	East-West:		701	East-West:			826	East-West:			829	East-West:			829
		SUM:		1172	SUM:		1175	SUM:			1394	SUM:			1397	SUM:			1397
VOLUME/CAPACITY (V/C) RATIO:				0.977			0.979				1.162				1.164				1.164
V/C LESS ATSAC/ATCS ADJUSTMENT:				0.877			0.879				1.062				1.064				1.064
LEVEL OF SERVICE (LOS):				D			D				F				F				F

REMARKS:

Version: 1i Beta; 8/4/2011

PROJECT IMPACT

Change in *v/c* due to project:	0.002	Δ*v/c* after mitigation:	0.002
Significant impacted?	NO	Fully mitigated?	N/A

Level of Service Worksheet
(Circular 212 Method)

I/S #:	North-South Street:	I-405 Freeway SB Ramps	Year of Count:	2018	Ambient Growth: (%):	1	Conducted by:	HM	Date:	6/27/2019
2	East-West Street:	Jefferson Boulevard	Projection Year:	2024	Peak Hour:	PM	Reviewed by:	RK	Project:	The Jeff Hotel Project

	EXISTING CONDITION			EXISTING PLUS PROJECT			FUTURE CONDITION W/O PROJECT				FUTURE CONDITION W/ PROJECT				FUTURE W/ PROJECT W/ MITIGATION			
MOVEMENT	Volume	No. of Lanes	Lane Volume	Project Traffic	Total Volume	Lane Volume	Added Volume	Total Volume	No. of Lanes	Lane Volume	Added Volume	Total Volume	No. of Lanes	Lane Volume	Added Volume	Total Volume	No. of Lanes	Lane Volume
NORTHBOUND																		
Left	0	0	**0**	0	0	**0**	0	0	0	**0**	0	0	0	**0**	0	0	0	**0**
Left-Through		0							0				0				0	
Through	0	0	0	0	0	0	0	0	0	0	0	0	0	0	0	0	0	0
Through-Right		0							0				0				0	
Right	0	0	0	0	0	0	0	0	0	0	0	0	0	0	0	0	0	0
Left-Through-Right		0							0				0				0	
Left-Right		0							0				0				0	
SOUTHBOUND																		
Left	65	1	65	4	69	69	20	89	1	89	4	93	1	93	0	93	1	93
Left-Through		0							0				0				0	
Through	0	0	**90**	0	0	**90**	0	0	0	**122**	0	0	0	**122**	0	0	0	**122**
Through-Right		0							0				0				0	
Right	180	1	0	0	180	0	52	243	1	0	0	243	1	0	0	243	1	0
Left-Through-Right		1							1				1				1	
Left-Right		0							0				0				0	
EASTBOUND																		
Left	307	2	169	0	307	169	137	463	2	255	0	463	2	255	0	463	2	255
Left-Through		0							0				0				0	
Through	783	2	392	7	790	395	81	912	2	456	7	919	2	460	0	919	2	460
Through-Right		0							0				0				0	
Right	541	1	**541**	0	541	**541**	61	635	1	**635**	0	635	1	**635**	0	635	1	**635**
Left-Through-Right		0							0				0				0	
Left-Right		0							0				0				0	
WESTBOUND																		
Left	497	2	**273**	8	505	**278**	13	541	2	**298**	8	549	2	**302**	0	549	2	**302**
Left-Through		0							0				0				0	
Through	912	2	456	6	918	459	66	1034	2	517	6	1040	2	520	0	1040	2	520
Through-Right		0							0				0				0	
Right	0	0	0	0	0	0	0	0	0	0	0	0	0	0	0	0	0	0
Left-Through-Right		0							0				0				0	
Left-Right		0							0				0				0	
CRITICAL VOLUMES	*North-South:*		90	*North-South:*		90	*North-South:*			122	*North-South:*			122	*North-South:*			122
	East-West:		814	*East-West:*		819	*East-West:*			933	*East-West:*			937	*East-West:*			937
	SUM:		904	*SUM:*		909	*SUM:*			1055	*SUM:*			1059	*SUM:*			1059
VOLUME/CAPACITY *(V/C)* RATIO:			0.753			0.758				0.879				0.883				0.883
V/C LESS ATSAC/ATCS ADJUSTMENT:			0.653			0.658				0.779				0.783				0.783
LEVEL OF SERVICE (LOS):			B			B				C				C				C

	NB--	SB--	EB--	WB--
Right Turns: FREE-1, NRTOR-2 or OLA-3?	0	0	0	0
Existing Plus Project	0	0	0	0
Future Condition W/O Project	0	0	0	0
Future Condition W/ Project	0	0	0	0
Future W/ Project W/ Mitigation	0	0	0	0

	Existing Condition	Existing Plus Project	Future Condition W/O Project	Future Condition W/ Project	Future W/ Project W/ Mitigation
No. of Phases	0	0	0	0	0
Opposed Ø'ing: N/S-1, E/W-2 or Both-3?	0	0	0	0	0
ATSAC-1 or ATSAC+ATCS-2?	2	2	2	2	2
Override Capacity	1200	1200	1200	1200	1200

REMARKS:

Version: 1i Beta; 8/4/2011

PROJECT IMPACT

Change in *v/c* due to project:	0.004	*Δv/c* after mitigation:	0.004
Significant impacted?	NO	Fully mitigated?	N/A

Level of Service Worksheet
(Circular 212 Method)

I/S #:	North-South Street:	I-405 Freeway NB Ramps	Year of Count:	2018	Ambient Growth: (%):	1	Conducted by:	HM	Date:	6/27/2019
3	East-West Street:	Jefferson Boulevard	Projection Year:	2024	Peak Hour:	AM	Reviewed by:	RK	Project:	The Jeff Hotel Project

		EXISTING CONDITION			EXISTING PLUS PROJECT			FUTURE CONDITION W/O PROJECT				FUTURE CONDITION W/ PROJECT				FUTURE W/ PROJECT W/ MITIGATION			
	MOVEMENT	Volume	No. of Lanes	Lane Volume	Project Traffic	Total Volume	Lane Volume	Added Volume	Total Volume	No. of Lanes	Lane Volume	Added Volume	Total Volume	No. of Lanes	Lane Volume	Added Volume	Total Volume	No. of Lanes	Lane Volume
	No. of Phases			0			0			0				0					0
	Opposed Ø'ing: N/S-1, E/W-2 or Both-3?			0			0			0				0					0
	Right Turns: FREE-1, NRTOR-2 or OLA-3?	NB-- 0 SB--		0	NB-- 0 SB--		0	NB-- 0 SB--		0		NB-- 0 SB--		0		NB-- 0 SB--		0	
		EB-- 0 WB--		0	EB-- 0 WB--		0	EB-- 0 WB--		0		EB-- 0 WB--		0		EB-- 0 WB--		0	
	ATSAC-1 or ATSAC+ATCS-2?			2			2			2				2					2
	Override Capacity			1200			1200			1200				1200					1200
NORTHBOUND	Left	195	1	195	0	195	195	45	252	1	252	0	252	1	252	0	252	1	252
	Left-Through		0							0				0				0	
	Through	265	0	**653**	0	265	**662**	0	281	0	**695**	0	281	0	**704**	0	281	0	**704**
	Through-Right		0							0				0				0	
	Right	388	0	0	9	397	0	2	414	0	0	9	423	0	0	0	423	0	0
	Left-Through-Right		1							1				1				1	
	Left-Right		0							0				0				0	
SOUTHBOUND	Left	0	0	**0**	0	0	**0**	0	0	0	**0**	0	0	0	**0**	0	0	0	**0**
	Left-Through		0							0				0				0	
	Through	0	0	0	0	0	0	0	0	0	0	0	0	0	0	0	0	0	0
	Through-Right		0							0				0				0	
	Right	0	0	0	0	0	0	0	0	0	0	0	0	0	0	0	0	0	0
	Left-Through-Right		0							0				0				0	
	Left-Right		0							0				0				0	
EASTBOUND	Left	539	2	296	0	539	296	51	623	2	343	0	623	2	343	0	623	2	343
	Left-Through		0							0				0				0	
	Through	725	2	**363**	13	738	**369**	44	814	2	**407**	13	827	2	**414**	0	827	2	**414**
	Through-Right		0							0				0				0	
	Right	0	0	0	0	0	0	0	0	0	0	0	0	0	0	0	0	0	0
	Left-Through-Right		0							0				0				0	
	Left-Right		0							0				0				0	
WESTBOUND	Left	365	1	**365**	6	371	**371**	5	392	1	**392**	6	398	1	**398**	0	398	1	**398**
	Left-Through		0							0				0				0	
	Through	517	1	259	6	523	262	69	618	1	309	6	624	1	312	0	624	1	312
	Through-Right		1							1				1				1	
	Right	136	1	136	4	140	140	14	158	1	158	4	162	1	162	0	162	1	162
	Left-Through-Right		0							0				0				0	
	Left-Right		0							0				0				0	
	CRITICAL VOLUMES	North-South:		653	North-South:		662	North-South:			695	North-South:			704	North-South:			704
		East-West:		728	East-West:		740	East-West:			799	East-West:			812	East-West:			812
		SUM:		1381	SUM:		1402	SUM:			1494	SUM:			1516	SUM:			1516
	VOLUME/CAPACITY (V/C) RATIO:			1.151			1.168				1.245				1.263	With Signal System Upgrade			1.253
	V/C LESS ATSAC/ATCS ADJUSTMENT:			1.051			1.068				1.145				1.163				1.153
	LEVEL OF SERVICE (LOS):			F			F				F				F				F

REMARKS:

Version: 1i Beta; 8/4/2011

PROJECT IMPACT

Change in *v/c* due to project: 0.018 — Δ*v/c* after mitigation: 0.008

Significant impacted? YES — Fully mitigated? YES

Level of Service Workheet
(Circular 212 Method)

I/S #:	North-South Street:	I-405 Freeway NB Ramps	Year of Count:	2018	Ambient Growth: (%):	1	Conducted by:	HM	Date:	6/27/2019
3	East-West Street:	Jefferson Boulevard	Projection Year:	2024	Peak Hour:	PM	Reviewed by:	RK	Project:	The Jeff Hotel Project

No. of Phases			0				0				0				0				0
Opposed Ø'ing: N/S-1, E/W-2 or Both-3?			0				0				0				0				0
Right Turns: FREE-1, NRTOR-2 or OLA-3?	NB--	0	SB-- 0	NB--	0	SB-- 0	NB--	0	SB-- 0	NB--	0	SB-- 0	NB--	0	SB-- 0	NB--	0	SB-- 0
	EB--	0	WB-- 0	EB--	0	WB-- 0	EB--	0	WB-- 0	EB--	0	WB-- 0	EB--	0	WB-- 0	EB--	0	WB-- 0
ATSAC-1 or ATSAC+ATCS-2?			2			2			2			2			2			2
Override Capacity			1200			1200			1200			1200			1200			1200

	MOVEMENT	EXISTING CONDITION			EXISTING PLUS PROJECT			FUTURE CONDITION W/O PROJECT				FUTURE CONDITION W/ PROJECT				FUTURE W/ PROJECT W/ MITIGATION			
		Volume	No. of Lanes	Lane Volume	Project Traffic	Total Volume	Lane Volume	Added Volume	Total Volume	No. of Lanes	Lane Volume	Added Volume	Total Volume	No. of Lanes	Lane Volume	Added Volume	Total Volume	No. of Lanes	Lane Volume
NORTHBOUND	Left	395	1	**381**	0	395	**386**	51	470	1	**433**	0	470	1	**438**	0	470	1	**438**
	Left-Through		0							0				0				0	
	Through	3	0	381	0	3	386	0	3	0	433	0	3	0	438	0	3	0	438
	Through-Right		0							0				0				0	
	Right	364	0	0	9	373	0	7	393	0	0	9	402	0	0	0	402	0	0
	Left-Through-Right		1							1				1				1	
	Left-Right		0							0				0				0	
SOUTHBOUND	Left	0	0	0	0	0	0	0	0	0	0	0	0	0	0	0	0	0	0
	Left-Through		0							0				0				0	
	Through	0	0	**0**	0	0	**0**	0	0	0	**0**	0	0	0	**0**	0	0	0	**0**
	Through-Right		0							0				0				0	
	Right	0	0	0	0	0	0	0	0	0	0	0	0	0	0	0	0	0	0
	Left-Through-Right		0							0				0				0	
	Left-Right		0							0				0				0	
EASTBOUND	Left	307	2	169	0	307	169	483	809	2	445	0	809	2	445	0	809	2	445
	Left-Through		0							0				0				0	
	Through	816	2	**408**	11	827	**414**	262	1128	2	**564**	11	1139	2	**570**	0	1139	2	**570**
	Through-Right		0							0				0				0	
	Right	0	0	0	0	0	0	0	0	0	0	0	0	0	0	0	0	0	0
	Left-Through-Right		0							0				0				0	
	Left-Right		0							0				0				0	
WESTBOUND	Left	497	1	**497**	8	505	**505**	13	541	1	**541**	8	549	1	**549**	0	549	1	**549**
	Left-Through		0							0				0				0	
	Through	585	1	293	6	591	296	117	738	1	369	6	744	1	372	0	744	1	372
	Through-Right		1							1				1				1	
	Right	102	1	102	4	106	106	13	121	1	121	4	125	1	125	0	125	1	125
	Left-Through-Right		0							0				0				0	
	Left-Right		0							0				0				0	
CRITICAL VOLUMES		North-South:		381	North-South:		386	North-South:			433	North-South:			438	North-South:			438
		East-West:		905	East-West:		919	East-West:			1105	East-West:			1119	East-West:			1119
		SUM:		1286	SUM:		1305	SUM:			1538	SUM:			1557	SUM:			1557
VOLUME/CAPACITY (V/C) RATIO:				1.072			1.088				1.282				1.298	With Signal System Upgrade			1.288
V/C LESS ATSAC/ATCS ADJUSTMENT:				0.972			0.988				1.182				1.198				1.188
LEVEL OF SERVICE (LOS):				E			E				F				F				F

REMARKS:

Version: 1i Beta; 8/4/2011

PROJECT IMPACT

Change in *v/c* due to project:	0.016	Δ*v/c* after mitigation:	0.006
Significant impacted?	YES	Fully mitigated?	YES

CRAIN & ASSOCIATES
CMA CALCULATIONS

INTERSECTION:4, SLAUSON AV. & JEFFERSON BLVD.
DATE: 6/27/2019 INITIALS: PERIOD: AM PEAK HOUR
CASE: EXISTING (2018)

** INPUT VOLUMES **

APPROACH	LEFT	THROUGH	** RIGHT TURNS MIN ON GREEN	MAX ON RED **
WESTBOUND	251	213	0	0
EASTBOUND	26	100	0	120
NORTHBOUND	105	809	3	138
SOUTHBOUND	17	699	57	0

** NUMBER OF LANES **

APPROACH	LEFT ONLY	LEFT SHARED	THROUGH ONLY	RIGHT SHARED	RIGHT ONLY	L/T/R SHARED	TOTAL LANES
WESTBOUND	2	0	0	1	0	0	3
EASTBOUND	1	0	1	0	1	0	3
NORTHBOUND	1	0	3	0	1	0	5
SOUTHBOUND	1	0	2	1	0	0	4

** ASSIGNED LANE VOLUMES **

APPROACH	LEFT ONLY	LEFT SHARED	THROUGH ONLY	RIGHT SHARED	RIGHT ONLY	L/T/R SHARED
WESTBOUND	138	N/A	N/A	213	N/A	N/A
EASTBOUND	26	N/A	100	N/A	0	N/A
NORTHBOUND	105	N/A	270	N/A	3	N/A
SOUTHBOUND	17	N/A	252	252	N/A	N/A

EAST-WEST CRITICAL VOLUMES 239
NORTH-SOUTH CRITICAL VOLUMES 357

THE SUM OF CRITICAL VOLUMES 596

NUMBER OF CRITICAL CLEARANCE INTERVALS 4*

CMA VALUE 0.368

LEVEL OF SERVICE ..... A

---

* Includes CMA value decreased due to ATSAC Implementation.

CRAIN & ASSOCIATES
CMA CALCULATIONS

INTERSECTION:4, SLAUSON AV. & JEFFERSON BLVD.
DATE: 6/27/2019 INITIALS: PERIOD: PM PEAK HOUR
CASE: EXISTING (2018)

** INPUT VOLUMES **

APPROACH	LEFT	THROUGH	** RIGHT TURNS ** MIN ON GREEN	MAX ON RED
WESTBOUND	292	89	0	0
EASTBOUND	25	181	0	217
NORTHBOUND	79	913	73	161
SOUTHBOUND	54	612	32	0

** NUMBER OF LANES **

APPROACH	LEFT ONLY	LEFT SHARED	THROUGH ONLY	RIGHT SHARED	RIGHT ONLY	L/T/R SHARED	TOTAL LANES
WESTBOUND	2	0	0	1	0	0	3
EASTBOUND	1	0	1	0	1	0	3
NORTHBOUND	1	0	3	0	1	0	5
SOUTHBOUND	1	0	2	1	0	0	4

** ASSIGNED LANE VOLUMES **

APPROACH	LEFT ONLY	LEFT SHARED	THROUGH ONLY	RIGHT SHARED	RIGHT ONLY	L/T/R SHARED
WESTBOUND	161	N/A	N/A	89	N/A	N/A
EASTBOUND	25	N/A	181	N/A	0	N/A
NORTHBOUND	79	N/A	304	N/A	73	N/A
SOUTHBOUND	54	N/A	215	215	N/A	N/A

EAST-WEST CRITICAL VOLUMES 342
NORTH-SOUTH CRITICAL VOLUMES 358

THE SUM OF CRITICAL VOLUMES 700

NUMBER OF CRITICAL CLEARANCE INTERVALS 4*

CMA VALUE 0.439

LEVEL OF SERVICE ..... A

---

* Includes CMA value decreased due to ATSAC Implementation.

CRAIN & ASSOCIATES
CMA CALCULATIONS

INTERSECTION:4, SLAUSON AV. & JEFFERSON BLVD.
DATE: 6/27/2019 INITIALS: PERIOD: AM PEAK HOUR
CASE: EXISTING (2018) WITH PROJECT

** INPUT VOLUMES **

APPROACH	LEFT	THROUGH	** RIGHT TURNS MIN ON GREEN	MAX ON RED **
WESTBOUND	251	229	0	0
EASTBOUND	27	112	0	137
NORTHBOUND	126	809	3	138
SOUTHBOUND	17	697	62	0

** NUMBER OF LANES **

APPROACH	LEFT ONLY	LEFT SHARED	THROUGH ONLY	RIGHT SHARED	RIGHT ONLY	L/T/R SHARED	TOTAL LANES
WESTBOUND	2	0	0	1	0	0	3
EASTBOUND	1	0	1	0	1	0	3
NORTHBOUND	1	0	3	0	1	0	5
SOUTHBOUND	1	0	2	1	0	0	4

** ASSIGNED LANE VOLUMES **

APPROACH	LEFT ONLY	LEFT SHARED	THROUGH ONLY	RIGHT SHARED	RIGHT ONLY	L/T/R SHARED
WESTBOUND	138	N/A	N/A	229	N/A	N/A
EASTBOUND	27	N/A	112	N/A	0	N/A
NORTHBOUND	126	N/A	270	N/A	3	N/A
SOUTHBOUND	17	N/A	253	253	N/A	N/A

EAST-WEST CRITICAL VOLUMES 256
NORTH-SOUTH CRITICAL VOLUMES 379

THE SUM OF CRITICAL VOLUMES 635

NUMBER OF CRITICAL CLEARANCE INTERVALS 4*

CMA VALUE 0.393

LEVEL OF SERVICE ..... A

---

* Includes CMA value decreased due to ATSAC Implementation.

CRAIN & ASSOCIATES
CMA CALCULATIONS

INTERSECTION:4, SLAUSON AV. & JEFFERSON BLVD.
DATE: 6/27/2019 INITIALS: PERIOD: PM PEAK HOUR
CASE: EXISTING (2018) WITH PROJECT

** INPUT VOLUMES **

APPROACH	LEFT	THROUGH	** RIGHT TURNS MIN ON GREEN	MAX ON RED **
WESTBOUND	292	101	0	0
EASTBOUND	25	192	0	241
NORTHBOUND	96	913	73	161
SOUTHBOUND	53	602	37	0

** NUMBER OF LANES **

APPROACH	LEFT ONLY	LEFT SHARED	THROUGH ONLY	RIGHT SHARED	RIGHT ONLY	L/T/R SHARED	TOTAL LANES
WESTBOUND	2	0	0	1	0	0	3
EASTBOUND	1	0	1	0	1	0	3
NORTHBOUND	1	0	3	0	1	0	5
SOUTHBOUND	1	0	2	1	0	0	4

** ASSIGNED LANE VOLUMES **

APPROACH	LEFT ONLY	LEFT SHARED	THROUGH ONLY	RIGHT SHARED	RIGHT ONLY	L/T/R SHARED
WESTBOUND	161	N/A	N/A	101	N/A	N/A
EASTBOUND	25	N/A	192	N/A	0	N/A
NORTHBOUND	96	N/A	304	N/A	73	N/A
SOUTHBOUND	53	N/A	213	213	N/A	N/A

EAST-WEST CRITICAL VOLUMES 353
NORTH-SOUTH CRITICAL VOLUMES 357

THE SUM OF CRITICAL VOLUMES 710

NUMBER OF CRITICAL CLEARANCE INTERVALS 4*

CMA VALUE 0.446

LEVEL OF SERVICE ..... A

---

* Includes CMA value decreased due to ATSAC Implementation.

CRAIN & ASSOCIATES
CMA CALCULATIONS

INTERSECTION:4, SLAUSON AV. & JEFFERSON BLVD.
DATE: 6/27/2019 INITIALS: PERIOD: AM PEAK HOUR
CASE: FUTURE (2024) WITHOUT PROJECT

** INPUT VOLUMES **

APPROACH	LEFT	THROUGH	** RIGHT TURNS ** MIN ON GREEN	MAX ON RED
WESTBOUND	297	241	6	0
EASTBOUND	31	119	0	127
NORTHBOUND	111	885	6	163
SOUTHBOUND	18	798	65	0

** NUMBER OF LANES **

APPROACH	LEFT ONLY	LEFT SHARED	THROUGH ONLY	RIGHT SHARED	RIGHT ONLY	L/T/R SHARED	TOTAL LANES
WESTBOUND	2	0	0	1	0	0	3
EASTBOUND	1	0	1	0	1	0	3
NORTHBOUND	1	0	3	0	1	0	5
SOUTHBOUND	1	0	2	1	0	0	4

** ASSIGNED LANE VOLUMES **

APPROACH	LEFT ONLY	LEFT SHARED	THROUGH ONLY	RIGHT SHARED	RIGHT ONLY	L/T/R SHARED
WESTBOUND	163	N/A	N/A	247	N/A	N/A
EASTBOUND	31	N/A	119	N/A	0	N/A
NORTHBOUND	111	N/A	295	N/A	6	N/A
SOUTHBOUND	18	N/A	288	288	N/A	N/A

EAST-WEST CRITICAL VOLUMES 282
NORTH-SOUTH CRITICAL VOLUMES 399

THE SUM OF CRITICAL VOLUMES 681

NUMBER OF CRITICAL CLEARANCE INTERVALS 4*

CMA VALUE 0.425

LEVEL OF SERVICE ..... A

---

* Includes CMA value decreased due to ATSAC Implementation.

CRAIN & ASSOCIATES
CMA CALCULATIONS

INTERSECTION:4, SLAUSON AV. & JEFFERSON BLVD.
DATE: 6/27/2019 INITIALS: PERIOD: PM PEAK HOUR
CASE: FUTURE (2024) WITHOUT PROJECT

** INPUT VOLUMES **

APPROACH	LEFT	THROUGH	** RIGHT TURNS MIN ON GREEN	MAX ON RED **
WESTBOUND	339	115	29	0
EASTBOUND	32	217	0	230
NORTHBOUND	84	1030	109	187
SOUTHBOUND	57	690	38	0

** NUMBER OF LANES **

APPROACH	LEFT ONLY	LEFT SHARED	THROUGH ONLY	RIGHT SHARED	RIGHT ONLY	L/T/R SHARED	TOTAL LANES
WESTBOUND	2	0	0	1	0	0	3
EASTBOUND	1	0	1	0	1	0	3
NORTHBOUND	1	0	3	0	1	0	5
SOUTHBOUND	1	0	2	1	0	0	4

** ASSIGNED LANE VOLUMES **

APPROACH	LEFT ONLY	LEFT SHARED	THROUGH ONLY	RIGHT SHARED	RIGHT ONLY	L/T/R SHARED
WESTBOUND	187	N/A	N/A	144	N/A	N/A
EASTBOUND	32	N/A	217	N/A	0	N/A
NORTHBOUND	84	N/A	343	N/A	109	N/A
SOUTHBOUND	57	N/A	243	243	N/A	N/A

EAST-WEST CRITICAL VOLUMES 404
NORTH-SOUTH CRITICAL VOLUMES 400

THE SUM OF CRITICAL VOLUMES 804

NUMBER OF CRITICAL CLEARANCE INTERVALS 4*

CMA VALUE 0.515

LEVEL OF SERVICE ..... A

---

* Includes CMA value decreased due to ATSAC Implementation.

CRAIN & ASSOCIATES
CMA CALCULATIONS

INTERSECTION:4, SLAUSON AV. & JEFFERSON BLVD.
DATE: 6/27/2019 INITIALS: PERIOD: AM PEAK HOUR
CASE: FUTURE (2024) WITH PROJECT

** INPUT VOLUMES **

APPROACH	LEFT	THROUGH	** RIGHT TURNS ** MIN ON GREEN	MAX ON RED
WESTBOUND	297	257	6	0
EASTBOUND	32	131	0	144
NORTHBOUND	132	885	6	163
SOUTHBOUND	18	796	70	0

** NUMBER OF LANES **

APPROACH	LEFT ONLY	LEFT SHARED	THROUGH ONLY	RIGHT SHARED	RIGHT ONLY	L/T/R SHARED	TOTAL LANES
WESTBOUND	2	0	0	1	0	0	3
EASTBOUND	1	0	1	0	1	0	3
NORTHBOUND	1	0	3	0	1	0	5
SOUTHBOUND	1	0	2	1	0	0	4

** ASSIGNED LANE VOLUMES **

APPROACH	LEFT ONLY	LEFT SHARED	THROUGH ONLY	RIGHT SHARED	RIGHT ONLY	L/T/R SHARED
WESTBOUND	163	N/A	N/A	263	N/A	N/A
EASTBOUND	32	N/A	131	N/A	0	N/A
NORTHBOUND	132	N/A	295	N/A	6	N/A
SOUTHBOUND	18	N/A	289	289	N/A	N/A

EAST-WEST CRITICAL VOLUMES 295
NORTH-SOUTH CRITICAL VOLUMES 421

THE SUM OF CRITICAL VOLUMES 716

NUMBER OF CRITICAL CLEARANCE INTERVALS 4*

CMA VALUE 0.451

LEVEL OF SERVICE ..... A

---

* Includes CMA value decreased due to ATSAC Implementation.

CRAIN & ASSOCIATES
CMA CALCULATIONS

INTERSECTION:4, SLAUSON AV. & JEFFERSON BLVD.
DATE: 6/27/2019 INITIALS: PERIOD: PM PEAK HOUR
CASE: FUTURE (2024) WITH PROJECT

** INPUT VOLUMES **

APPROACH	LEFT	THROUGH	** RIGHT TURNS MIN ON GREEN	MAX ON RED **
WESTBOUND	339	127	29	0
EASTBOUND	32	228	0	254
NORTHBOUND	101	1030	110	186
SOUTHBOUND	56	680	43	0

** NUMBER OF LANES **

APPROACH	LEFT ONLY	LEFT SHARED	THROUGH ONLY	RIGHT SHARED	RIGHT ONLY	L/T/R SHARED	TOTAL LANES
WESTBOUND	2	0	0	1	0	0	3
EASTBOUND	1	0	1	0	1	0	3
NORTHBOUND	1	0	3	0	1	0	5
SOUTHBOUND	1	0	2	1	0	0	4

** ASSIGNED LANE VOLUMES **

APPROACH	LEFT ONLY	LEFT SHARED	THROUGH ONLY	RIGHT SHARED	RIGHT ONLY	L/T/R SHARED
WESTBOUND	186	N/A	N/A	156	N/A	N/A
EASTBOUND	32	N/A	228	N/A	0	N/A
NORTHBOUND	101	N/A	343	N/A	110	N/A
SOUTHBOUND	56	N/A	241	241	N/A	N/A

EAST-WEST CRITICAL VOLUMES 414
NORTH-SOUTH CRITICAL VOLUMES 399

THE SUM OF CRITICAL VOLUMES 813

NUMBER OF CRITICAL CLEARANCE INTERVALS 4*

CMA VALUE 0.521

LEVEL OF SERVICE ..... A

---

* Includes CMA value decreased due to ATSAC Implementation.

CRAIN & ASSOCIATES
CMA CALCULATIONS

INTERSECTION:5, SLAUSON AV. & SEPULVEDA BLVD.
DATE: 6/27/2019 INITIALS: PERIOD: AM PEAK HOUR
CASE: EXISTING (2018)

** INPUT VOLUMES **

APPROACH			** RIGHT TURNS **	
	LEFT	THROUGH	MIN ON GREEN	MAX ON RED
WESTBOUND	101	354	168	89
EASTBOUND	24	201	0	45
NORTHBOUND	108	1384	34	0
SOUTHBOUND	161	715	15	0

** NUMBER OF LANES **

APPROACH	LEFT ONLY	LEFT SHARED	THROUGH ONLY	RIGHT SHARED	RIGHT ONLY	L/T/R SHARED	TOTAL LANES
WESTBOUND	2	0	2	0	1	0	5
EASTBOUND	1	0	2	0	1	0	4
NORTHBOUND	2	0	2	1	0	0	5
SOUTHBOUND	2	0	2	1	0	0	5

** ASSIGNED LANE VOLUMES **

APPROACH	LEFT ONLY	LEFT SHARED	THROUGH ONLY	RIGHT SHARED	RIGHT ONLY	L/T/R SHARED
WESTBOUND	56	N/A	177	N/A	168	N/A
EASTBOUND	24	N/A	100	N/A	0	N/A
NORTHBOUND	59	N/A	473	473	N/A	N/A
SOUTHBOUND	89	N/A	243	243	N/A	N/A

EAST-WEST CRITICAL VOLUMES 201
NORTH-SOUTH CRITICAL VOLUMES 562

THE SUM OF CRITICAL VOLUMES 763

NUMBER OF CRITICAL CLEARANCE INTERVALS 4*

CMA VALUE 0.485

LEVEL OF SERVICE ..... A

---

* Includes CMA value decreased due to ATSAC Implementation.

CRAIN & ASSOCIATES
CMA CALCULATIONS

INTERSECTION:5, SLAUSON AV. & SEPULVEDA BLVD.
DATE: 6/27/2019 INITIALS: PERIOD: PM PEAK HOUR
CASE: EXISTING (2018)

** INPUT VOLUMES **

APPROACH	LEFT	THROUGH	** RIGHT TURNS MIN ON GREEN	MAX ON RED **
WESTBOUND	198	266	79	139
EASTBOUND	43	273	44	55
NORTHBOUND	100	1065	78	0
SOUTHBOUND	252	1406	24	0

** NUMBER OF LANES **

APPROACH	LEFT ONLY	LEFT SHARED	THROUGH ONLY	RIGHT SHARED	RIGHT ONLY	L/T/R SHARED	TOTAL LANES
WESTBOUND	2	0	2	0	1	0	5
EASTBOUND	1	0	2	0	1	0	4
NORTHBOUND	2	0	2	1	0	0	5
SOUTHBOUND	2	0	2	1	0	0	5

** ASSIGNED LANE VOLUMES **

APPROACH	LEFT ONLY	LEFT SHARED	THROUGH ONLY	RIGHT SHARED	RIGHT ONLY	L/T/R SHARED
WESTBOUND	109	N/A	133	N/A	79	N/A
EASTBOUND	43	N/A	136	N/A	44	N/A
NORTHBOUND	55	N/A	381	381	N/A	N/A
SOUTHBOUND	139	N/A	477	477	N/A	N/A

EAST-WEST CRITICAL VOLUMES 245
NORTH-SOUTH CRITICAL VOLUMES 532

THE SUM OF CRITICAL VOLUMES 777

NUMBER OF CRITICAL CLEARANCE INTERVALS 4*

CMA VALUE 0.495

LEVEL OF SERVICE ..... A

---

* Includes CMA value decreased due to ATSAC Implementation.

CRAIN & ASSOCIATES
CMA CALCULATIONS

INTERSECTION:5, SLAUSON AV. & SEPULVEDA BLVD.
DATE: 6/27/2019 INITIALS: PERIOD: AM PEAK HOUR
CASE: EXISTING (2018) WITH PROJECT

** INPUT VOLUMES **

APPROACH	LEFT	THROUGH	** RIGHT TURNS MIN ON GREEN	MAX ON RED **
WESTBOUND	101	362	168	89
EASTBOUND	24	207	0	51
NORTHBOUND	116	1384	34	0
SOUTHBOUND	161	715	15	0

** NUMBER OF LANES **

APPROACH	LEFT ONLY	LEFT SHARED	THROUGH ONLY	RIGHT SHARED	RIGHT ONLY	L/T/R SHARED	TOTAL LANES
WESTBOUND	2	0	2	0	1	0	5
EASTBOUND	1	0	2	0	1	0	4
NORTHBOUND	2	0	2	1	0	0	5
SOUTHBOUND	2	0	2	1	0	0	5

** ASSIGNED LANE VOLUMES **

APPROACH	LEFT ONLY	LEFT SHARED	THROUGH ONLY	RIGHT SHARED	RIGHT ONLY	L/T/R SHARED
WESTBOUND	56	N/A	181	N/A	168	N/A
EASTBOUND	24	N/A	104	N/A	0	N/A
NORTHBOUND	64	N/A	473	473	N/A	N/A
SOUTHBOUND	89	N/A	243	243	N/A	N/A

EAST-WEST CRITICAL VOLUMES 205
NORTH-SOUTH CRITICAL VOLUMES 562

THE SUM OF CRITICAL VOLUMES 767

NUMBER OF CRITICAL CLEARANCE INTERVALS 4*

CMA VALUE 0.488

LEVEL OF SERVICE ..... A

---

* Includes CMA value decreased due to ATSAC Implementation.

CRAIN & ASSOCIATES
CMA CALCULATIONS

INTERSECTION:5, SLAUSON AV. & SEPULVEDA BLVD.
DATE: 6/27/2019 INITIALS: PERIOD: PM PEAK HOUR
CASE: EXISTING (2018) WITH PROJECT

** INPUT VOLUMES **

APPROACH			** RIGHT TURNS **	
	LEFT	THROUGH	MIN ON GREEN	MAX ON RED
WESTBOUND	198	273	79	139
EASTBOUND	43	279	46	59
NORTHBOUND	107	1065	78	0
SOUTHBOUND	252	1406	24	0

** NUMBER OF LANES **

APPROACH	LEFT ONLY	LEFT SHARED	THROUGH ONLY	RIGHT SHARED	RIGHT ONLY	L/T/R SHARED	TOTAL LANES
WESTBOUND	2	0	2	0	1	0	5
EASTBOUND	1	0	2	0	1	0	4
NORTHBOUND	2	0	2	1	0	0	5
SOUTHBOUND	2	0	2	1	0	0	5

** ASSIGNED LANE VOLUMES **

APPROACH	LEFT ONLY	LEFT SHARED	THROUGH ONLY	RIGHT SHARED	RIGHT ONLY	L/T/R SHARED
WESTBOUND	109	N/A	136	N/A	79	N/A
EASTBOUND	43	N/A	140	N/A	46	N/A
NORTHBOUND	59	N/A	381	381	N/A	N/A
SOUTHBOUND	139	N/A	477	477	N/A	N/A

EAST-WEST CRITICAL VOLUMES 249
NORTH-SOUTH CRITICAL VOLUMES 536

THE SUM OF CRITICAL VOLUMES 785

NUMBER OF CRITICAL CLEARANCE INTERVALS 4*

CMA VALUE 0.501

LEVEL OF SERVICE ..... A

---

* Includes CMA value decreased due to ATSAC Implementation.

CRAIN & ASSOCIATES
CMA CALCULATIONS

INTERSECTION:5, SLAUSON AV. & SEPULVEDA BLVD.
DATE: 6/27/2019 INITIALS: PERIOD: AM PEAK HOUR
CASE: FUTURE (2024) WITHOUT PROJECT

** INPUT VOLUMES **

APPROACH	LEFT	THROUGH	** RIGHT TURNS MIN ON GREEN	MAX ON RED **
WESTBOUND	164	415	183	114
EASTBOUND	25	232	0	56
NORTHBOUND	151	1640	107	0
SOUTHBOUND	208	958	16	0

** NUMBER OF LANES **

APPROACH	LEFT ONLY	LEFT SHARED	THROUGH ONLY	RIGHT SHARED	RIGHT ONLY	L/T/R SHARED	TOTAL LANES
WESTBOUND	2	0	2	0	1	0	5
EASTBOUND	1	0	2	0	1	0	4
NORTHBOUND	2	0	2	1	0	0	5
SOUTHBOUND	2	0	2	1	0	0	5

** ASSIGNED LANE VOLUMES **

APPROACH	LEFT ONLY	LEFT SHARED	THROUGH ONLY	RIGHT SHARED	RIGHT ONLY	L/T/R SHARED
WESTBOUND	90	N/A	208	N/A	183	N/A
EASTBOUND	25	N/A	116	N/A	0	N/A
NORTHBOUND	83	N/A	582	582	N/A	N/A
SOUTHBOUND	114	N/A	325	325	N/A	N/A

EAST-WEST CRITICAL VOLUMES 233
NORTH-SOUTH CRITICAL VOLUMES 696

THE SUM OF CRITICAL VOLUMES 929

NUMBER OF CRITICAL CLEARANCE INTERVALS 4*

CMA VALUE 0.606

LEVEL OF SERVICE ..... B

---

* Includes CMA value decreased due to ATSAC Implementation.

CRAIN & ASSOCIATES
CMA CALCULATIONS

INTERSECTION:5, SLAUSON AV. & SEPULVEDA BLVD.
DATE: 6/27/2019 INITIALS: PERIOD: PM PEAK HOUR
CASE: FUTURE (2024) WITHOUT PROJECT

** INPUT VOLUMES **

APPROACH	LEFT	THROUGH	** RIGHT TURNS MIN ON GREEN	MAX ON RED **
WESTBOUND	271	314	108	162
EASTBOUND	46	347	60	69
NORTHBOUND	126	1389	156	0
SOUTHBOUND	295	1697	25	0

** NUMBER OF LANES **

APPROACH	LEFT ONLY	LEFT SHARED	THROUGH ONLY	RIGHT SHARED	RIGHT ONLY	L/T/R SHARED	TOTAL LANES
WESTBOUND	2	0	2	0	1	0	5
EASTBOUND	1	0	2	0	1	0	4
NORTHBOUND	2	0	2	1	0	0	5
SOUTHBOUND	2	0	2	1	0	0	5

** ASSIGNED LANE VOLUMES **

APPROACH	LEFT ONLY	LEFT SHARED	THROUGH ONLY	RIGHT SHARED	RIGHT ONLY	L/T/R SHARED
WESTBOUND	149	N/A	157	N/A	108	N/A
EASTBOUND	46	N/A	174	N/A	60	N/A
NORTHBOUND	69	N/A	515	515	N/A	N/A
SOUTHBOUND	162	N/A	574	574	N/A	N/A

EAST-WEST CRITICAL VOLUMES 323
NORTH-SOUTH CRITICAL VOLUMES 677
THE SUM OF CRITICAL VOLUMES 1000

NUMBER OF CRITICAL CLEARANCE INTERVALS 4*

CMA VALUE 0.657

LEVEL OF SERVICE ..... B

---

* Includes CMA value decreased due to ATSAC Implementation.

CRAIN & ASSOCIATES
CMA CALCULATIONS

INTERSECTION:5, SLAUSON AV. & SEPULVEDA BLVD.
DATE: 6/27/2019 INITIALS: PERIOD: AM PEAK HOUR
CASE: FUTURE (2024) WITH PROJECT

** INPUT VOLUMES **

APPROACH	LEFT	THROUGH	** RIGHT TURNS MIN ON GREEN	MAX ON RED **
WESTBOUND	164	423	183	114
EASTBOUND	25	238	0	62
NORTHBOUND	159	1640	107	0
SOUTHBOUND	208	958	16	0

** NUMBER OF LANES **

APPROACH	LEFT ONLY	LEFT SHARED	THROUGH ONLY	RIGHT SHARED	RIGHT ONLY	L/T/R SHARED	TOTAL LANES
WESTBOUND	2	0	2	0	1	0	5
EASTBOUND	1	0	2	0	1	0	4
NORTHBOUND	2	0	2	1	0	0	5
SOUTHBOUND	2	0	2	1	0	0	5

** ASSIGNED LANE VOLUMES **

APPROACH	LEFT ONLY	LEFT SHARED	THROUGH ONLY	RIGHT SHARED	RIGHT ONLY	L/T/R SHARED
WESTBOUND	90	N/A	212	N/A	183	N/A
EASTBOUND	25	N/A	119	N/A	0	N/A
NORTHBOUND	87	N/A	582	582	N/A	N/A
SOUTHBOUND	114	N/A	325	325	N/A	N/A

EAST-WEST CRITICAL VOLUMES 237
NORTH-SOUTH CRITICAL VOLUMES 696
THE SUM OF CRITICAL VOLUMES 933

NUMBER OF CRITICAL CLEARANCE INTERVALS 4*

CMA VALUE 0.609

LEVEL OF SERVICE ..... B

---

* Includes CMA value decreased due to ATSAC Implementation.

CRAIN & ASSOCIATES
CMA CALCULATIONS

INTERSECTION:5, SLAUSON AV. & SEPULVEDA BLVD.
DATE: 6/27/2019 INITIALS: PERIOD: PM PEAK HOUR
CASE: FUTURE (2024) WITH PROJECT

** INPUT VOLUMES **

APPROACH	LEFT	THROUGH	** RIGHT TURNS MIN ON GREEN	MAX ON RED **
WESTBOUND	271	321	108	162
EASTBOUND	46	353	62	73
NORTHBOUND	133	1389	156	0
SOUTHBOUND	295	1697	25	0

** NUMBER OF LANES **

APPROACH	LEFT ONLY	LEFT SHARED	THROUGH ONLY	RIGHT SHARED	RIGHT ONLY	L/T/R SHARED	TOTAL LANES
WESTBOUND	2	0	2	0	1	0	5
EASTBOUND	1	0	2	0	1	0	4
NORTHBOUND	2	0	2	1	0	0	5
SOUTHBOUND	2	0	2	1	0	0	5

** ASSIGNED LANE VOLUMES **

APPROACH	LEFT ONLY	LEFT SHARED	THROUGH ONLY	RIGHT SHARED	RIGHT ONLY	L/T/R SHARED
WESTBOUND	149	N/A	160	N/A	108	N/A
EASTBOUND	46	N/A	176	N/A	62	N/A
NORTHBOUND	73	N/A	515	515	N/A	N/A
SOUTHBOUND	162	N/A	574	574	N/A	N/A

EAST-WEST CRITICAL VOLUMES 325
NORTH-SOUTH CRITICAL VOLUMES 677

THE SUM OF CRITICAL VOLUMES 1002

NUMBER OF CRITICAL CLEARANCE INTERVALS 4*

CMA VALUE 0.659

LEVEL OF SERVICE ..... B

---

* Includes CMA value decreased due to ATSAC Implementation.

CRAIN & ASSOCIATES
CMA CALCULATIONS

INTERSECTION:6, SLAUSON AV. & MARINA FWY.
DATE: 6/27/2019 INITIALS: PERIOD: AM PEAK HOUR
CASE: EXISTING (2018)

** INPUT VOLUMES **

APPROACH	LEFT	THROUGH	** RIGHT TURNS ** MIN ON GREEN	MAX ON RED
WESTBOUND	2329	1051	8	2
EASTBOUND	4	350	0	484
NORTHBOUND	253	0	0	1413
SOUTHBOUND	0	0	3	0

** NUMBER OF LANES **

APPROACH	LEFT ONLY	LEFT SHARED	THROUGH ONLY	RIGHT SHARED	RIGHT ONLY	L/T/R SHARED	TOTAL LANES
WESTBOUND	3	0	2	0	1	0	6
EASTBOUND	1	0	3	0	1	0	5
NORTHBOUND	1	1	0	0	2	0	4
SOUTHBOUND	1	0	0	1	0	0	2

** ASSIGNED LANE VOLUMES **

APPROACH	LEFT ONLY	LEFT SHARED	THROUGH ONLY	RIGHT SHARED	RIGHT ONLY	L/T/R SHARED
WESTBOUND	854	N/A	526	N/A	8	N/A
EASTBOUND	4	N/A	117	N/A	0	N/A
NORTHBOUND	126	126	N/A	N/A	0	N/A
SOUTHBOUND	0	N/A	N/A	3	N/A	N/A

EAST-WEST CRITICAL VOLUMES 970
NORTH-SOUTH CRITICAL VOLUMES 129

THE SUM OF CRITICAL VOLUMES 1099

NUMBER OF CRITICAL CLEARANCE INTERVALS 4*

CMA VALUE 0.729

LEVEL OF SERVICE C

---

* Includes CMA value decreased due to ATSAC Implementation.

Northbound and Southbound approaches have opposed signal phases.

CRAIN & ASSOCIATES
CMA CALCULATIONS

INTERSECTION:6, SLAUSON AV. & MARINA FWY.
DATE: 6/27/2019 INITIALS: PERIOD: PM PEAK HOUR
CASE: EXISTING (2018)

** INPUT VOLUMES **

APPROACH	LEFT	THROUGH	** RIGHT TURNS MIN ON GREEN	MAX ON RED **
WESTBOUND	809	688	0	1
EASTBOUND	2	682	0	394
NORTHBOUND	383	0	823	594
SOUTHBOUND	0	3	0	0

** NUMBER OF LANES **

APPROACH	LEFT ONLY	LEFT SHARED	THROUGH ONLY	RIGHT SHARED	RIGHT ONLY	L/T/R SHARED	TOTAL LANES
WESTBOUND	3	0	2	0	1	0	6
EASTBOUND	1	0	3	0	1	0	5
NORTHBOUND	1	1	0	0	2	0	4
SOUTHBOUND	1	0	0	1	0	0	2

** ASSIGNED LANE VOLUMES **

APPROACH	LEFT ONLY	LEFT SHARED	THROUGH ONLY	RIGHT SHARED	RIGHT ONLY	L/T/R SHARED
WESTBOUND	297	N/A	344	N/A	0	N/A
EASTBOUND	2	N/A	227	N/A	0	N/A
NORTHBOUND	192	192	N/A	N/A	412	N/A
SOUTHBOUND	0	N/A	N/A	3	N/A	N/A

EAST-WEST CRITICAL VOLUMES 524
NORTH-SOUTH CRITICAL VOLUMES 415

THE SUM OF CRITICAL VOLUMES 939

NUMBER OF CRITICAL CLEARANCE INTERVALS 4*

CMA VALUE 0.613

LEVEL OF SERVICE ..... B

---

* Includes CMA value decreased due to ATSAC Implementation.

Northbound and Southbound approaches have opposed signal phases.

CRAIN & ASSOCIATES
CMA CALCULATIONS

INTERSECTION:6, SLAUSON AV. & MARINA FWY.
DATE: 6/27/2019 INITIALS: PERIOD: AM PEAK HOUR
CASE: EXISTING (2018) WITH PROJECT

** INPUT VOLUMES **

APPROACH			** RIGHT TURNS **	
	LEFT	THROUGH	MIN ON GREEN	MAX ON RED
WESTBOUND	2329	1055	8	2
EASTBOUND	4	353	0	487
NORTHBOUND	257	0	0	1413
SOUTHBOUND	0	0	3	0

** NUMBER OF LANES **

APPROACH	LEFT ONLY	LEFT SHARED	THROUGH ONLY	RIGHT SHARED	RIGHT ONLY	L/T/R SHARED	TOTAL LANES
WESTBOUND	3	0	2	0	1	0	6
EASTBOUND	1	0	3	0	1	0	5
NORTHBOUND	1	1	0	0	2	0	4
SOUTHBOUND	1	0	0	1	0	0	2

** ASSIGNED LANE VOLUMES **

APPROACH	LEFT ONLY	LEFT SHARED	THROUGH ONLY	RIGHT SHARED	RIGHT ONLY	L/T/R SHARED
WESTBOUND	854	N/A	528	N/A	8	N/A
EASTBOUND	4	N/A	118	N/A	0	N/A
NORTHBOUND	128	128	N/A	N/A	0	N/A
SOUTHBOUND	0	N/A	N/A	3	N/A	N/A

EAST-WEST CRITICAL VOLUMES 972
NORTH-SOUTH CRITICAL VOLUMES 131
THE SUM OF CRITICAL VOLUMES 1103

NUMBER OF CRITICAL CLEARANCE INTERVALS 4*

CMA VALUE 0.732

LEVEL OF SERVICE C

---

* Includes CMA value decreased due to ATSAC Implementation.

Northbound and Southbound approaches have opposed signal phases.

CRAIN & ASSOCIATES
CMA CALCULATIONS

INTERSECTION:6, SLAUSON AV. & MARINA FWY.
DATE: 6/27/2019 INITIALS: PERIOD: PM PEAK HOUR
CASE: EXISTING (2018) WITH PROJECT

** INPUT VOLUMES **

APPROACH	LEFT	THROUGH	** RIGHT TURNS MIN ON GREEN	MAX ON RED **
WESTBOUND	809	691	0	1
EASTBOUND	2	685	0	398
NORTHBOUND	387	0	823	594
SOUTHBOUND	0	3	0	0

** NUMBER OF LANES **

APPROACH	LEFT ONLY	LEFT SHARED	THROUGH ONLY	RIGHT SHARED	RIGHT ONLY	L/T/R SHARED	TOTAL LANES
WESTBOUND	3	0	2	0	1	0	6
EASTBOUND	1	0	3	0	1	0	5
NORTHBOUND	1	1	0	0	2	0	4
SOUTHBOUND	1	0	0	1	0	0	2

** ASSIGNED LANE VOLUMES **

APPROACH	LEFT ONLY	LEFT SHARED	THROUGH ONLY	RIGHT SHARED	RIGHT ONLY	L/T/R SHARED
WESTBOUND	297	N/A	346	N/A	0	N/A
EASTBOUND	2	N/A	228	N/A	0	N/A
NORTHBOUND	194	194	N/A	N/A	412	N/A
SOUTHBOUND	0	N/A	N/A	3	N/A	N/A

EAST-WEST CRITICAL VOLUMES 524
NORTH-SOUTH CRITICAL VOLUMES 415

THE SUM OF CRITICAL VOLUMES 939

NUMBER OF CRITICAL CLEARANCE INTERVALS 4*

CMA VALUE 0.613

LEVEL OF SERVICE ..... B

---

* Includes CMA value decreased due to ATSAC Implementation.

Northbound and Southbound approaches have opposed signal phases.

CRAIN & ASSOCIATES
CMA CALCULATIONS

INTERSECTION:6, SLAUSON AV. & MARINA FWY.
DATE: 6/27/2019 INITIALS: PERIOD: AM PEAK HOUR
CASE: FUTURE (2024) WITHOUT PROJECT

** INPUT VOLUMES **

APPROACH			** RIGHT TURNS **	
	LEFT	THROUGH	MIN ON GREEN	MAX ON RED
WESTBOUND	2492	1229	9	2
EASTBOUND	4	423	0	622
NORTHBOUND	277	0	0	1578
SOUTHBOUND	0	0	3	0

** NUMBER OF LANES **

APPROACH	LEFT ONLY	LEFT SHARED	THROUGH ONLY	RIGHT SHARED	RIGHT ONLY	L/T/R SHARED	TOTAL LANES
WESTBOUND	3	0	2	0	1	0	6
EASTBOUND	1	0	3	0	1	0	5
NORTHBOUND	1	1	0	0	2	0	4
SOUTHBOUND	1	0	0	1	0	0	2

** ASSIGNED LANE VOLUMES **

APPROACH	LEFT ONLY	LEFT SHARED	THROUGH ONLY	RIGHT SHARED	RIGHT ONLY	L/T/R SHARED
WESTBOUND	914	N/A	614	N/A	9	N/A
EASTBOUND	4	N/A	141	N/A	0	N/A
NORTHBOUND	138	138	N/A	N/A	0	N/A
SOUTHBOUND	0	N/A	N/A	3	N/A	N/A

EAST-WEST CRITICAL VOLUMES 1054
NORTH-SOUTH CRITICAL VOLUMES 141
THE SUM OF CRITICAL VOLUMES 1195

NUMBER OF CRITICAL CLEARANCE INTERVALS 4*

CMA VALUE 0.799

LEVEL OF SERVICE C

---

* Includes CMA value decreased due to ATSAC Implementation.

Northbound and Southbound approaches have opposed signal phases.

CRAIN & ASSOCIATES
CMA CALCULATIONS

INTERSECTION:6, SLAUSON AV. & MARINA FWY.
DATE: 6/27/2019 INITIALS: PERIOD: PM PEAK HOUR
CASE: FUTURE (2024) WITHOUT PROJECT

** INPUT VOLUMES **

APPROACH	LEFT	THROUGH	** RIGHT TURNS MIN ON GREEN	MAX ON RED **
WESTBOUND	867	804	0	1
EASTBOUND	2	857	0	445
NORTHBOUND	414	0	903	636
SOUTHBOUND	0	3	0	0

** NUMBER OF LANES **

APPROACH	LEFT ONLY	LEFT SHARED	THROUGH ONLY	RIGHT SHARED	RIGHT ONLY	L/T/R SHARED	TOTAL LANES
WESTBOUND	3	0	2	0	1	0	6
EASTBOUND	1	0	3	0	1	0	5
NORTHBOUND	1	1	0	0	2	0	4
SOUTHBOUND	1	0	0	1	0	0	2

** ASSIGNED LANE VOLUMES **

APPROACH	LEFT ONLY	LEFT SHARED	THROUGH ONLY	RIGHT SHARED	RIGHT ONLY	L/T/R SHARED
WESTBOUND	318	N/A	402	N/A	0	N/A
EASTBOUND	2	N/A	286	N/A	0	N/A
NORTHBOUND	207	207	N/A	N/A	452	N/A
SOUTHBOUND	0	N/A	N/A	3	N/A	N/A

EAST-WEST CRITICAL VOLUMES 604
NORTH-SOUTH CRITICAL VOLUMES 455

THE SUM OF CRITICAL VOLUMES 1059

NUMBER OF CRITICAL CLEARANCE INTERVALS 4*

CMA VALUE 0.700

LEVEL OF SERVICE ..... B

---

* Includes CMA value decreased due to ATSAC Implementation.

Northbound and Southbound approaches have opposed signal phases.

CRAIN & ASSOCIATES
CMA CALCULATIONS

INTERSECTION:6, SLAUSON AV. & MARINA FWY.
DATE: 6/27/2019 INITIALS: PERIOD: AM PEAK HOUR
CASE: FUTURE (2024) WITH PROJECT

** INPUT VOLUMES **

APPROACH			** RIGHT TURNS **	
	LEFT	THROUGH	MIN ON GREEN	MAX ON RED
WESTBOUND	2492	1233	9	2
EASTBOUND	4	426	0	625
NORTHBOUND	281	0	0	1578
SOUTHBOUND	0	0	3	0

** NUMBER OF LANES **

APPROACH	LEFT ONLY	LEFT SHARED	THROUGH ONLY	RIGHT SHARED	RIGHT ONLY	L/T/R SHARED	TOTAL LANES
WESTBOUND	3	0	2	0	1	0	6
EASTBOUND	1	0	3	0	1	0	5
NORTHBOUND	1	1	0	0	2	0	4
SOUTHBOUND	1	0	0	1	0	0	2

** ASSIGNED LANE VOLUMES **

APPROACH	LEFT ONLY	LEFT SHARED	THROUGH ONLY	RIGHT SHARED	RIGHT ONLY	L/T/R SHARED
WESTBOUND	914	N/A	616	N/A	9	N/A
EASTBOUND	4	N/A	142	N/A	0	N/A
NORTHBOUND	140	140	N/A	N/A	0	N/A
SOUTHBOUND	0	N/A	N/A	3	N/A	N/A

EAST-WEST CRITICAL VOLUMES 1056
NORTH-SOUTH CRITICAL VOLUMES 143

THE SUM OF CRITICAL VOLUMES 1199

NUMBER OF CRITICAL CLEARANCE INTERVALS 4*

CMA VALUE 0.802

LEVEL OF SERVICE ..... D

---

* Includes CMA value decreased due to ATSAC Implementation.

Northbound and Southbound approaches have opposed signal phases.

CRAIN & ASSOCIATES
CMA CALCULATIONS

INTERSECTION:6, SLAUSON AV. & MARINA FWY.
DATE: 6/27/2019 INITIALS: PERIOD: PM PEAK HOUR
CASE: FUTURE (2024) WITH PROJECT

** INPUT VOLUMES **

APPROACH	LEFT	THROUGH	** RIGHT TURNS MIN ON GREEN	MAX ON RED **
WESTBOUND	867	807	0	1
EASTBOUND	2	860	0	449
NORTHBOUND	418	0	903	636
SOUTHBOUND	0	3	0	0

** NUMBER OF LANES **

APPROACH	LEFT ONLY	LEFT SHARED	THROUGH ONLY	RIGHT SHARED	RIGHT ONLY	L/T/R SHARED	TOTAL LANES
WESTBOUND	3	0	2	0	1	0	6
EASTBOUND	1	0	3	0	1	0	5
NORTHBOUND	1	1	0	0	2	0	4
SOUTHBOUND	1	0	0	1	0	0	2

** ASSIGNED LANE VOLUMES **

APPROACH	LEFT ONLY	LEFT SHARED	THROUGH ONLY	RIGHT SHARED	RIGHT ONLY	L/T/R SHARED
WESTBOUND	318	N/A	404	N/A	0	N/A
EASTBOUND	2	N/A	287	N/A	0	N/A
NORTHBOUND	209	209	N/A	N/A	452	N/A
SOUTHBOUND	0	N/A	N/A	3	N/A	N/A

EAST-WEST CRITICAL VOLUMES 604
NORTH-SOUTH CRITICAL VOLUMES 455

THE SUM OF CRITICAL VOLUMES 1059

NUMBER OF CRITICAL CLEARANCE INTERVALS 4*

CMA VALUE 0.700

LEVEL OF SERVICE ..... B

---

* Includes CMA value decreased due to ATSAC Implementation.

Northbound and Southbound approaches have opposed signal phases.

Level of Service Worksheet
(Circular 212 Method)

I/S #:	North-South Street:	Sepulveda Boulevard	Year of Count:	2018	Ambient Growth: (%):	1	Conducted by:	HM	Date:	6/27/2019
7	East-West Street:	Centinela Avenue	Projection Year:	2024	Peak Hour:	AM	Reviewed by:	RK	Project:	The Jeff Hotel Project

	EXISTING CONDITION			EXISTING PLUS PROJECT			FUTURE CONDITION W/O PROJECT				FUTURE CONDITION W/ PROJECT				FUTURE W/ PROJECT W/ MITIGATION			
MOVEMENT	Volume	No. of Lanes	Lane Volume	Project Traffic	Total Volume	Lane Volume	Added Volume	Total Volume	No. of Lanes	Lane Volume	Added Volume	Total Volume	No. of Lanes	Lane Volume	Added Volume	Total Volume	No. of Lanes	Lane Volume
NORTHBOUND																		
Left	1052	2	**579**	0	1052	**579**	218	1335	3	**467**	0	1335	3	**467**	0	1335	3	**467**
Left-Through		0							0				0				0	
Through	1187	3	396	8	1195	398	198	1458	2	611	8	1466	2	613	0	1466	2	613
Through-Right		0							1				1				1	
Right	313	1	0	0	313	0	42	374	0	374	0	374	0	374	0	374	0	374
Left-Through-Right		0							0				0				0	
Left-Right		0							0				0				0	
SOUTHBOUND																		
Left	66	2	36	1	67	37	2	72	2	40	1	73	2	40	0	73	2	40
Left-Through		0							0				0				0	
Through	713	3	**238**	5	718	**239**	248	1005	3	**335**	5	1010	3	**337**	0	1010	3	**337**
Through-Right		0							0				0				0	
Right	189	1	0	0	189	0	55	256	1	0	0	256	1	0	0	256	1	0
Left-Through-Right		0							0				0				0	
Left-Right		0							0				0				0	
EASTBOUND																		
Left	79	1	**79**	0	79	**79**	13	97	1	**97**	0	97	1	**97**	0	97	1	**97**
Left-Through		0							0				0				0	
Through	307	2	154	0	307	154	22	348	2	174	0	348	2	174	0	348	2	174
Through-Right		0							0				0				0	
Right	497	2	0	0	497	0	88	616	2	0	0	616	2	0	0	616	2	0
Left-Through-Right		0							0				0				0	
Left-Right		0							0				0				0	
WESTBOUND																		
Left	237	2	130	0	237	130	75	327	2	180	0	327	2	180	0	327	2	180
Left-Through		0							0				0				0	
Through	794	1	**430**	0	794	**431**	107	950	1	**513**	0	950	1	**514**	0	950	1	**514**
Through-Right		1							1				1				1	
Right	66	0	66	1	67	67	6	76	0	76	1	77	0	77	0	77	0	77
Left-Through-Right		0							0				0				0	
Left-Right		0							0				0				0	
CRITICAL VOLUMES	*North-South:*		817	*North-South:*		818	*North-South:*			802	*North-South:*			804	*North-South:*			804
	East-West:		509	*East-West:*		510	*East-West:*			610	*East-West:*			611	*East-West:*			611
	SUM:		1326	*SUM:*		1328	*SUM:*			1412	*SUM:*			1415	*SUM:*			1415
VOLUME/CAPACITY *(V/C)* RATIO:			0.964			0.966				1.027				1.029				1.029
V/C LESS ATSAC/ATCS ADJUSTMENT:			0.894			0.896				0.957				0.959				0.959
LEVEL OF SERVICE (LOS):			D			D				E				E				E

	NB--	SB--	EB--	WB--		NB--	SB--	EB--	WB--		NB--	SB--	EB--	WB--		NB--	SB--	EB--	WB--	
No. of Phases					4					4					4					4
Opposed Ø'ing: N/S-1, E/W-2 or Both-3?					0					0					0					0
Right Turns: FREE-1, NRTOR-2 or OLA-3?	1	1	3	0		1	1	3	0		0	1	3	0		0	1	3	0	
ATSAC-1 or ATSAC+ATCS-2?					1					1					1					1
Override Capacity					0					0					0					0

REMARKS:

Version: 1i Beta; 8/4/2011

PROJECT IMPACT

Change in *v/c* due to project:	0.002	Δ*v/c* after mitigation:	0.002
Significant impacted?	NO	Fully mitigated?	N/A

Level of Service Worksheet
(Circular 212 Method)

I/S #:	North-South Street:	Sepulveda Boulevard	Year of Count:	2018	Ambient Growth: (%):	1	Conducted by:	HM	Date:	6/27/2019
7	East-West Street:	Centinela Avenue	Projection Year:	2024	Peak Hour:	PM	Reviewed by:	RK	Project:	The Jeff Hotel Project

		EXISTING CONDITION			EXISTING PLUS PROJECT			FUTURE CONDITION W/O PROJECT				FUTURE CONDITION W/ PROJECT				FUTURE W/ PROJECT W/ MITIGATION			
	MOVEMENT	Volume	No. of Lanes	Lane Volume	Project Traffic	Total Volume	Lane Volume	Added Volume	Total Volume	No. of Lanes	Lane Volume	Added Volume	Total Volume	No. of Lanes	Lane Volume	Added Volume	Total Volume	No. of Lanes	Lane Volume
	No. of Phases			4			4				4				4				4
	Opposed Ø'ing: N/S-1, E/W-2 or Both-3?			0			0				0				0				0
	Right Turns: FREE-1, NRTOR-2 or OLA-3?	NB-- 1 SB--		1	NB-- 1 SB--		1	NB-- 0 SB--			1	NB-- 0 SB--			1	NB-- 0 SB--			1
		EB-- 3 WB--		0	EB-- 3 WB--		0	EB-- 3 WB--			0	EB-- 3 WB--			0	EB-- 3 WB--			0
	ATSAC-1 or ATSAC+ATCS-2?			1			1				1				1				1
	Override Capacity			0			0				0				0				0
NORTHBOUND	Left	411	2	226	0	411	226	138	574	3	201	0	574	3	201	0	574	3	201
	Left-Through		0							0				0				0	
	Through	878	3	293	7	885	295	308	1240	2	565	7	1247	2	568	0	1247	2	568
	Through-Right		0							1				1				1	
	Right	349	1	0	0	349	0	86	456	0	456	0	456	0	456	0	456	0	456
	Left-Through-Right		0							0				0				0	
	Left-Right		0							0				0				0	
SOUTHBOUND	Left	209	2	115	1	210	116	9	231	2	127	1	232	2	128	0	232	2	128
	Left-Through		0							0				0				0	
	Through	1459	3	486	6	1465	488	249	1798	3	599	6	1804	3	601	0	1804	3	601
	Through-Right		0							0				0				0	
	Right	94	1	0	0	94	0	16	116	1	0	0	116	1	0	0	116	1	0
	Left-Through-Right		0							0				0				0	
	Left-Right		0							0				0				0	
EASTBOUND	Left	105	1	105	0	105	105	49	160	1	160	0	160	1	160	0	160	1	160
	Left-Through		0							0				0				0	
	Through	690	2	345	0	690	345	100	832	2	416	0	832	2	416	0	832	2	416
	Through-Right		0							0				0				0	
	Right	1140	2	401	0	1140	401	226	1436	2	589	0	1436	2	589	0	1436	2	589
	Left-Through-Right		0							0				0				0	
	Left-Right		0							0				0				0	
WESTBOUND	Left	349	2	192	0	349	192	52	422	2	232	0	422	2	232	0	422	2	232
	Left-Through		0							0				0				0	
	Through	302	1	204	0	302	205	31	352	1	235	0	352	1	235	0	352	1	235
	Through-Right		1							1				1				1	
	Right	106	0	106	1	107	107	4	117	0	117	1	118	0	118	0	118	0	118
	Left-Through-Right		0							0				0				0	
	Left-Right		0							0				0				0	
	CRITICAL VOLUMES		North-South:	712		North-South:	714		North-South:		800		North-South:		802		North-South:		802
			East-West:	593		East-West:	593		East-West:		821		East-West:		821		East-West:		821
			SUM:	1305		SUM:	1307		SUM:		1621		SUM:		1623		SUM:		1623
	VOLUME/CAPACITY (V/C) RATIO:			0.949			0.951				1.179				1.180				1.180
	V/C LESS ATSAC/ATCS ADJUSTMENT:			0.879			0.881				1.109				1.110				1.110
	LEVEL OF SERVICE (LOS):			D			D				F				F				F

REMARKS:

Version: 1i Beta; 8/4/2011

PROJECT IMPACT

Change in *v/c* due to project: 0.001 — Δ*v/c* after mitigation: 0.001

Significant impacted? NO — Fully mitigated? N/A

APPENDIX D

TRAFFIC STUDY MEMORANDUM OF UNDERSTANDING (SIGNED ON MARCH 26, 2019)

Rec'd 3/21/2019

Memorandum of Understanding For a Traffic Study

This Memorandum of Understanding (MOU) acknowledges and agrees to all of the City of Culver City requirements and fees for the review of a traffic study for the following project:

Project Name: Jefferson Hotel Project
Project Address: 11469 Jefferson Boulevard, Culver City, CA 90230
Project Description: _____ GFA* Office / _____ GFA Industrial
-13,301 GFA Retail / _____ Residential Units
_____ GFA Other / +175 Hotel Units
Project Horizon Year: 2024 Ambient Growth Rate: One (1.0) % Per Year
Directional Distribution:

Proposed Uses:	N: 20%	S: 40%	E: 12%	W: 28%
Existing Uses:	N: 22%	S: 34%	E: 17%	W: 27%

[See Attachment 1 for the Proposed Project Site Plan. See Attachments 2 and 3 for the Proposed and Existing Project Trip Distribution Percentages, respectively.]

Trip Generation Rate(s): [ITE Latest Edition] / Other: _____

Land Use:	Hotel		Shopping Center			
	ITE Code #: 310		ITE Code #: 820			
	In / Out		In / Out		Total In / Total Out	
AM Trips:	48	/ 34	-6	/ -4	42	/ 30
PM Trips:	54	/ 51	-18	/ -20	36	/ 31

[See Attachment 4 for the Project Weekday Trip Generation Summary.]

Prior to the start of any proposed project analysis, the Traffic Consultant shall:

1. Obtain a list of related projects from the Planning Division of Culver City and other affected jurisdictions;
2. Prepare a draft list of "related projects specific to the proposed project"; and
3. Obtain written approval from the City of the "related projects specific to the proposed project" list.

[See Attachment 5 for current related projects lists from both the City of Culver City and the City of Los Angeles. The projects in these lists will be culled to include all relevant related projects within an approximate 1.5-mile radius of the project site (and large, more distant projects that may affect traffic at the study locations).]

Study Intersections

No.	Intersection:	/ Jurisdiction:
1.	Jefferson Boulevard & Mesmer Avenue	/ Culver City/Los Angeles
2.	Jefferson Boulevard & I-405 Freeway SB Ramps	/ Culver City/Los Angeles/Caltrans
3.	Jefferson Boulevard & I-405 Freeway NB Ramps	/ Culver City/Los Angeles/Caltrans
4.	Jefferson Boulevard & Slauson Avenue	/ Culver City
5.	Slauson Avenue & Sepulveda Boulevard	/ Culver City
6.	Slauson Avenue & Marina Freeway	/ Culver City/Caltrans
7.	Centinela Avenue & Sepulveda Boulevard	/ Culver City/Los Angeles

Residential Streets To Be Studied:

No.	Street Name:	/ Limits:	/ Jurisdiction:
1.	Segrell Way	/ n/o Slauson Avenue	/ Culver City
2.	Culver Park Drive	/ n/o Slauson Avenue	/ Culver City
3.	Slauson Avenue	/ w/o Segrell Way	/ Culver City

[See Attachment 6 for the Proposed Study Intersections and Residential Street Segments.]

* Gross Floor Area (GFA) shall be as defined in the most recent ITE publication.
** Indicate intersections subject to capacity analysis credit for advanced traffic signal control synchronization.
*** Include non-signalized intersections to be studied.
**** Use the same numbering system for all lists of intersections and figures in the traffic study.

Indicate trip credits To Be Requested (Amount Subject To City approval):	Yes	No
1. Existing Uses:	☑	☐
2. Pass-By Trips:	☑	☐
3. Internal Trip Capture:	☐	☑
4. Transit Oriented Developments (TOD):	☐	☑
5. Transportation Demand Management (TDM):	☐	☑

The traffic study shall also include:
1. Measures to prevent project traffic from entering the nearby residential area;
2. A section on bicycle travel, including the City's Bicycle and Pedestrian Master Plan and planned bicycle facilities in the vicinity of the project;
3. A freeway impact screening analysis in accordance with the First Amendment to the Agreement between LADOT and Caltrans District 7 on Freeway Impact Analysis Procedures. *[See Attachment 7 for Caltrans Freeway Impact Screening Analysis.]*

Maps:
The following maps shall be attached to the MOU:
1. A map showing the project's trip distribution percentages for each land use (inbound and outbound) at the study intersections and project driveways; and
2. A map showing the project's trips at the study intersections and project driveways.

[See Attachments 2 and 3 for the Proposed and Existing Project Trip Distribution Percentages, respectively. See Attachments 8 and 9 for the Net Project Trips at Intersections in the Project Vicinity during the AM and PM peak hours, respectively.]

Proposed Traffic Mitigation:
Any proposed traffic mitigation measure shall be listed and accompanied by a drawing of the existing and proposed improvements [including city boundary lines and existing / proposed property lines] and plans shall be of a minimum scale of one inch (1") equal to forty feet (40'-0").

Post-Occupancy Traffic Counts:
By signing below, the Property Owner / Developer / Applicant hereby agrees to pay for and submit to the City a post-occupancy traffic count analysis of the development to the satisfaction of the City. The analysis shall determine the amount of actual traffic (motor vehicle, bicycle and pedestrian) generated by the development compared to the ITE trip generation rates. The analysis shall include a traffic count of all onsite driveways taken upon reaching eighty five percent (85.0%) occupancy of the total building gross floor area or within one (1) year of the issuance of the first Temporary Certificate of Occupancy (TCO), as determined by the City. The data shall be used to confirm the findings in the approved traffic study, and shall not result in any additional traffic mitigation measures and/or conditions of approval on the subject project.

Congestion Management Plan (CMP):
This project shall also be subject to all City imposed CMP developer fees if the Planning Commission approval date is on or after the effective date of any City Council imposed CMP developer fees or as may be otherwise imposed by the City.

Barry Kurtz Traffic Study MOU Comment Items:
Per the Traffic Study MOU comment email provided by Barry Kurtz on November 1, 2018, we will provide additional analyses and sections within the traffic study. *[See Attachment 10 for Additional Traffic Study Items.]*

Fee:
Payment of a fee to the Engineering Division for the City's processing of the traffic study shall be required prior to the City's approval of the MOU. Said fee shall be in accordance with the most recent Fee Schedule as approved by the City Council.

Signatures

	Property Owner / Applicant:	Developer / Applicant:
Name [Signed]:		
Name [Printed]:	David Garcia	
Title:	Vice President & COO	
Company:	Sandstone Properties, Inc.	
Address:	10877 Wilshire Blvd., Ste. 1105	
City / State / Zip:	Los Angeles / CA / 90024	
Office:	(310) 393-9000	( )
Fax:	( )	( )
Cell:	( )	( )
E-Mail:	david@sandstoneproperties.com	

Traffic Consultant:

Name:	Ryan J. Kelly, T.E.
Title:	Sr. Transportation Engineer
Company:	Crain & Associates
Address:	300 Corporate Pointe, Suite 470
City / State / Zip:	Culver City / CA / 90230
Office:	(310) 473-6508
Fax:	(310) 444-9771
Cell:	( )
E-Mail:	rkelly@crainandassociates.com

If any of the intersection(s) to be studied as part of this traffic study are located within the City of Los Angeles, the unincorporated areas of Los Angeles County and/or impact any other public agency [i.e., CalTrans], then this MOU shall also be approved by the reviewing staff representative from each agency:

	City of Los Angeles:	County of Los Angeles:
Name [Signed]:		
Name [Printed]:	Hamed Sandoghdar	
Title:	Transportation Engineer	
Department:	LADOT	
	City of Los Angeles	County of Los Angeles
Address:	7166 W. Manchester Avenue	
City / State / Zip:	Los Angeles / CA / 90045	
Office:	(213) 485-1062	( )
Fax:	( )	( )
Cell:	( )	( )
E-Mail:	hamed.sandoghdar@lacity.org	

Approved by:

/

Property Owner – Applicant Date

/

Developer – Applicant Date

3/21/2019

/

Traffic Consultant Date

3/26/2019

City of Culver City Date

Note: This MOU shall become valid as of the date of the City's signature and shall expire one (1) year thereafter. If the "administrative draft" of the traffic study has not been filed with the City by the expiration date, this MOU shall expire and a new MOU filing, fee, review and approval process shall be required.

ATTACHMENT 1

PROPOSED PROJECT SITE PLAN

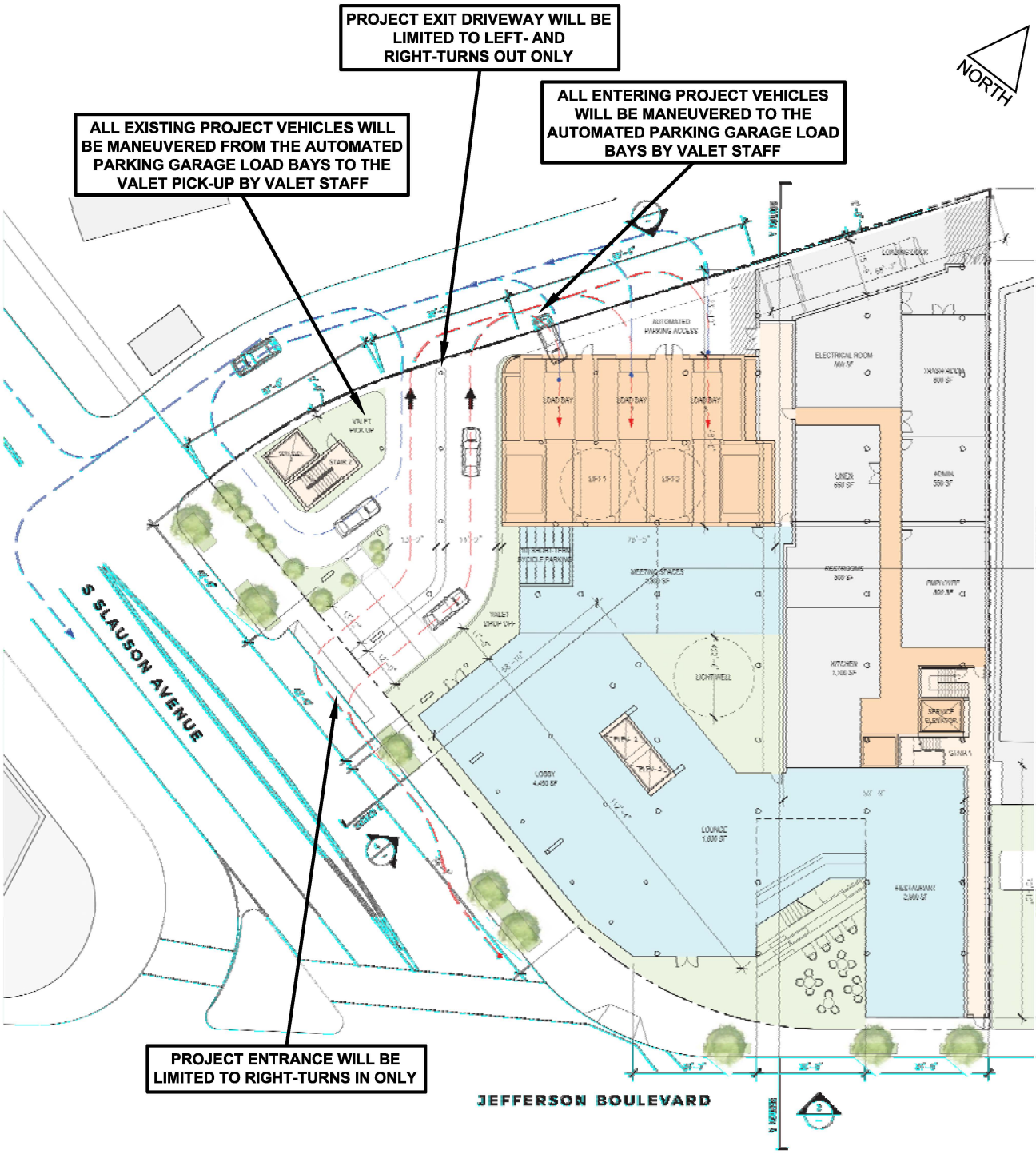

ATTACHMENT 1

8/30/2018

FN: JEFFERSON HOTEL CULVER\201808\Conceptual_Proj_SitePlan

PROPOSED PROJECT SITE PLAN

CRAIN & ASSOCIATES
Transportation Planning
Traffic Engineering
300 Corporate Pointe, Suite 470
Culver City, California 90230
PH (310) 473 6508 F (310) 444 9771
www.crainandassociates.com

ATTACHMENT 2

PROPOSED PROJECT TRIP DISTRIBUTION PERCENTAGES

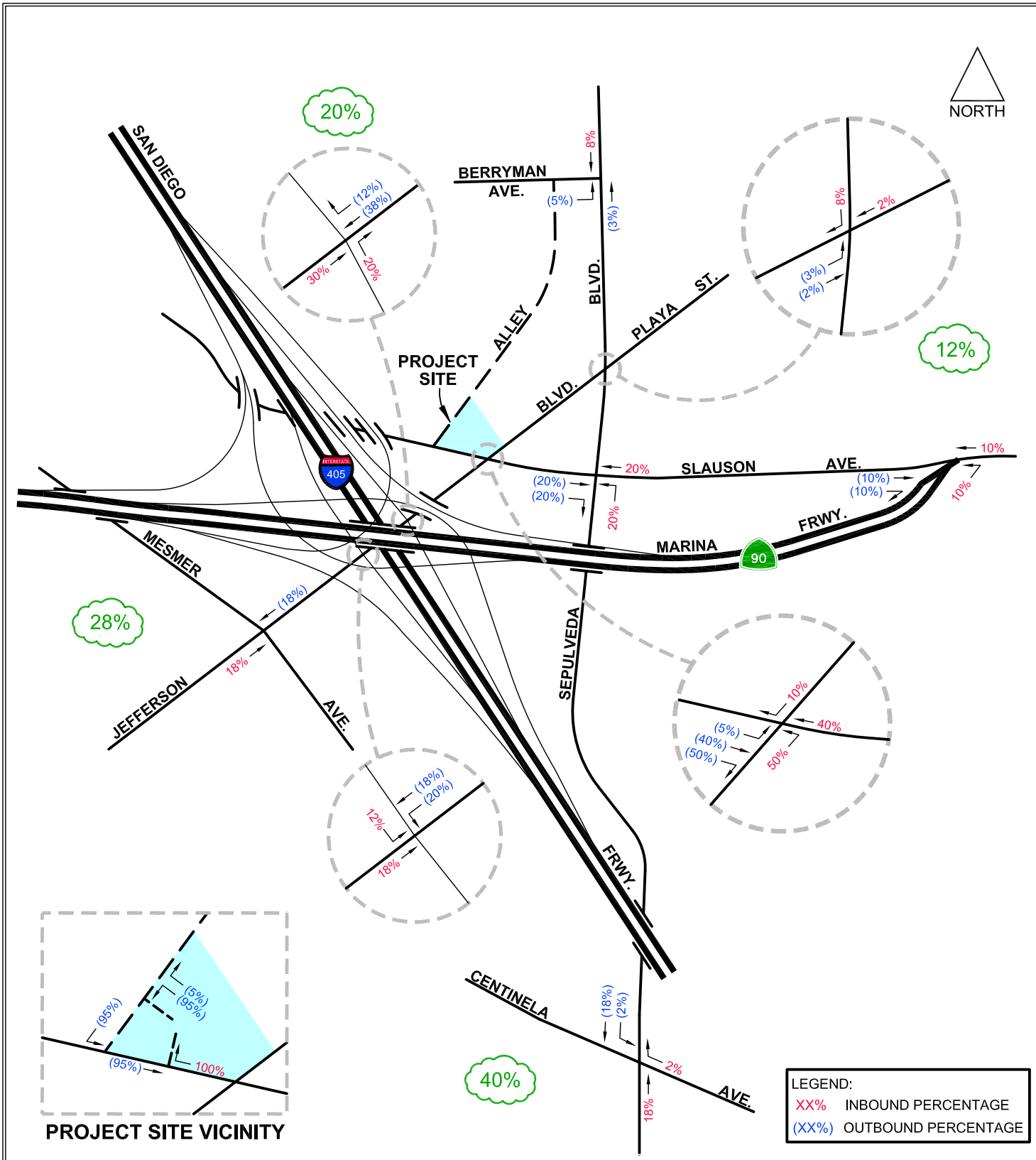

ATTACHMENT 2

8/30/2018

FN: JEFFERSON HOTEL CULVER\201808\PROJ-DISTRIBUTION

PROPOSED PROJECT TRIP DISTRIBUTION PERCENTAGES

CRAIN & ASSOCIATES
Transportation Planning
Traffic Engineering
300 Corporate Pointe, Suite 470
Culver City, California 90230
PH (310) 473 6508 F (310) 444 9771
www.crainandassociates.com

ATTACHMENT 3

EXISTING PROJECT TRIP DISTRIBUTION PERCENTAGES

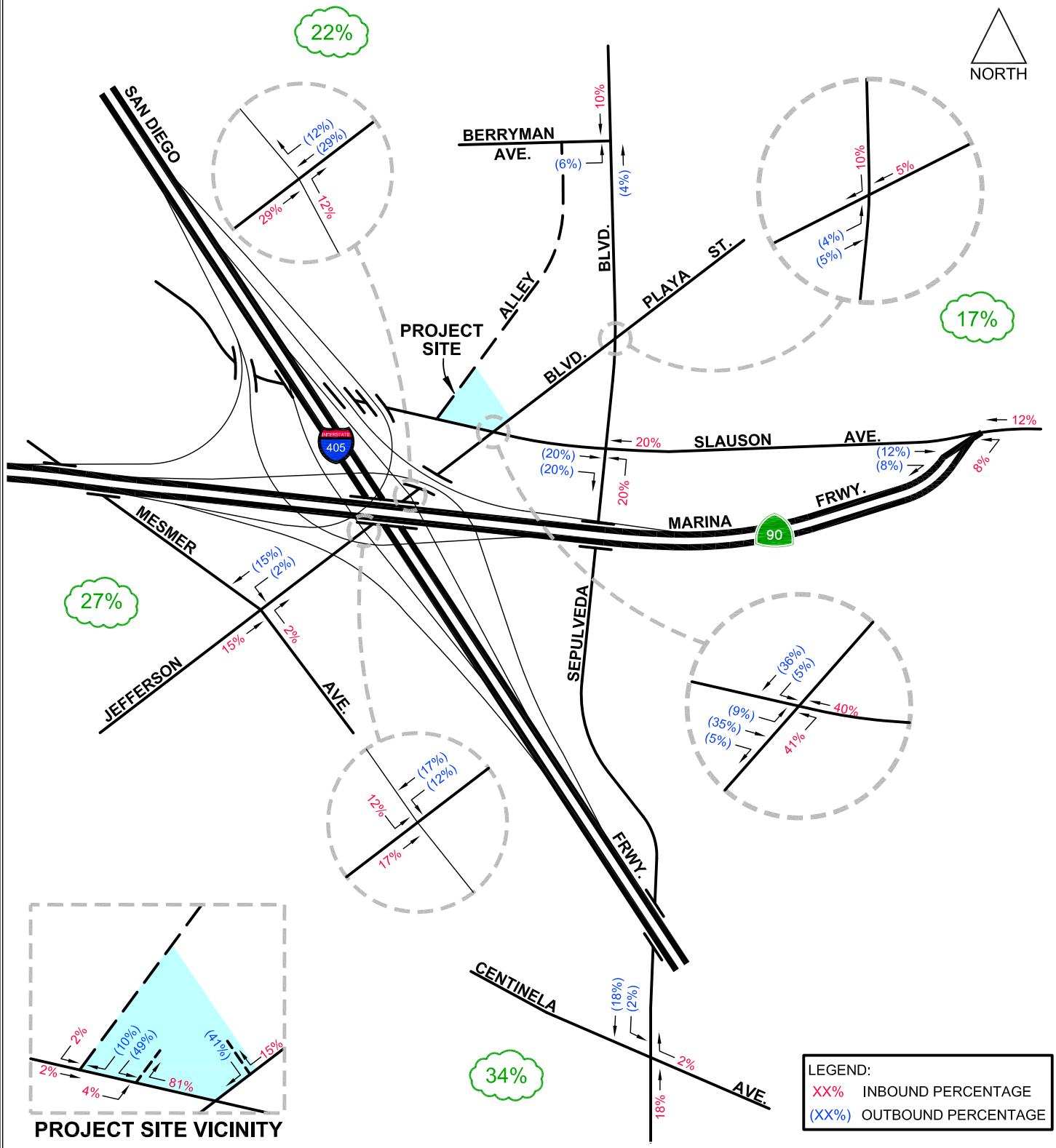

ATTACHMENT 3

8/30/2018

FN: JEFFERSON & SLAUSON HOTEL\201606\PROJ-DISTRIBUTION

EXISTING PROJECT TRIP DISTRIBUTION PERCENTAGES

CRAIN & ASSOCIATES
Transportation Planning
Traffic Engineering
300 Corporate Pointe, Suite 470
Culver City, California 90230
PH (310) 473 6508 F (310) 444 9771
www.crainandassociates.com

ATTACHMENT 4

PROJECT WEEKDAY TRIP GENERATION SUMMARY

ATTACHMENT 4

JEFFERSON HOTEL PROJECT
WEEKDAY TRIP GENERATION SUMMARY[1]

Land Use	ITE Code	Intensity[2]	Average Weekday	AM Peak Hour			PM Peak Hour		
				In	Out	Total	In	Out	Total
Trip Generation Rates									
Hotel	310	1 rm	8.36	59%	41%	0.47	51%	49%	0.60
Shopping Center	820	1 ksf	37.75	62%	38%	0.94	48%	52%	3.81
Trip Generation Summary									
Description		**Size**	**Average Weekday**	**AM Peak Hour**			**PM Peak Hour**		
				In	**Out**	**Total**	**In**	**Out**	**Total**
PROPOSED USES									
Hotel		175 rm	1,463	48	34	82	54	51	105
Proposed Project Trips			**1,463**	**48**	**34**	**82**	**54**	**51**	**105**
EXISTING USE									
Shopping Center		13.301 ksf	502	8	5	13	24	27	51
25% Pass-By Adjustment			(126)	(2)	(1)	(3)	(6)	(7)	(13)
Existing Project Driveway Trips (including Pass-By Trips)			**502**	**8**	**5**	**13**	**24**	**27**	**51**
Existing Project Trips			**376**	**6**	**4**	**10**	**18**	**20**	**38**
Net Project Driveway Trips (including Pass-By Trips)			**961**	**40**	**29**	**69**	**30**	**24**	**54**
Net Project Trips			**1,087**	**42**	**30**	**72**	**36**	**31**	**67**

Notes:

1) ITE *Trip Generation Manual* (10th Edition, 2017) trip generation rates and directional distributions for Land Use Codes 310 (Hotel) and 820 (Shopping Center) applied for the weekday daily, AM peak-hour, and PM peak-hour time periods. Rates for the general urban/suburban setting were used, as the rates for the Dense Multi-Use Urban setting are based on a limited number of studies.
2) rm = Rooms; ksf = Thousands of Square Feet of Gross Leasable Area.

ATTACHMENT 5

CURRENT RELATED PROJECTS LISTINGS
(CITIES OF CULVER CITY AND LOS ANGELES)

Culver City Related Projects List- Updated October 15, 2018

No.	Project Name	Address	Description	City	Est. Date Completion	Completed Date	Project Phase 1. Pre-Application 2. Entitlement 3. Pre-Building Permit 4. Building Permit 5. Construction 6. Completed (Occupied?)	Date of Entitlement Approval	Planner
1	Modification to CUP, enrollment increase (The Help Group)	12095-12101 Washington Blvd.	Increase in enrollment from 600 to 650 students at an existing private school for special needs students, grades Pre-K through 12	CC	2016	2016	Completed	12/09/2015	Planning Division 310-253-5710
2	Union 76	10638 Culver Blvd	Convenience store; 2,676 G.S.F.	CC	2017	2017	Completed - Occupied	04/11/2007	Jose Mendivil (310) 253-5757
3	Stoneview Nature Center	5950 Stoneview Dr	A new four-acre park with a new one-story 4,000 sq. ft. building, with a multi-purpose room, staff office, and restrooms	CC	2017	2017	Completed - Occupied	Approved by County on 04/22/2014	Susan Yun (310) 253-5755
4	Chevron Carwash	11197 Washington Place	Conversion of existing vehicle repair and mini-mart into drive-thru carwash and construction of new 2,500 sq. ft. convenience store	CC	2017	2017	Completed - Occupied	02/12/2014	Gabriela Silva (310) 253-5736
5	Costco Expansion	13463 Washington Blvd	A 31,023 sq. ft. expansion of an existing 142,152 sq. ft. retail warehouse and demolition of an existing 63,213 sq. ft. grocery store/super market, for a net loss of 32,190 sq. ft., as well as addition of two (2) fueling pumps at an existing fueling station and reconfiguration of on-site parking and circulation.	CC	2017	2017	Completed - Occupied	10/21/2015	Gabriela Silva (310) 253-5736
6	Harbor Freight (Ice Rink Site)	4545 Sepulveda Blvd	Renovation of 28,534 square feet of former ice rink into a two tenant commercial space, including a retail home improvement outlet. No increase in floor area.	CC	2017	2017	Completed - Occupied	10/14/2015 (PC) 12/14/2015 (CC)	Jose Mendivil (310) 253-5757
7	Orchard Supply Hardware	11441 Jefferson Blvd	Addition of 12,737 sq. ft. to an existing 19,406 sq. ft. commercial space used as a retail office supply store, to be used as a home improvement store, within an existing 36,538 sq. ft. multi-tenant commercial building, and conversion of an existing 4,988 sq. ft. paint store into an indoor nursery area	CC	2017	2017	Completed - Occupied	06/22/2016	Gabriela Silva (310) 253-5736
8	New single story retail/ office building	5450 Sepulveda Blvd	Single story retail building totaling 14,800 square feet with rooftop parking	CC	2017	2017	Completed - Occupied	06/06/2013	Jose Mendivil (310) 523-5757
9	Wende Museum	10808 Culver Blvd	Conversion of existing 12,596 sq. ft. armory building into a museum	CC	2017	2017	Completed - Occupied	02/28/2014	Gabriela Silva (310) 253-5736

No.	Project Name	Address	Description	City	Est. Date Completion	Completed Date	Project Phase 1. Pre-Application 2. Entitlement 3. Pre-Building Permit 4. Building Permit 5. Construction 6. Completed (Occupied?)	Date of Entitlement Approval	Planner
10	11198 Washington Place	11198 Washington Place	New single story commercial building comprising 3,850 square feet with 11 parking spaces and 500 square feet of outdoor dining/seating on vacant land	CC	2017	2017	Completed - Occupied	11/14/2013	Gabriela Silva (310) 253-5736
11	Kayvon Mixed Use	12712-12718 Washington Boulevard	New 4 story mixed use building and subterranean parking with 5 for lease residential units, 3,308 sf of retail, office, or restaurant. Previous/Existing uses: approximately 2,340 sf of commercial uses, a funiture store and reclaimed/vintage wood store.	CC	2017	2017	Completed - Occupied	1/10/2013	Jose Mendivil (310) 253-5757
12	4109-4111 Duquesne Ave	4109-4111 Duquesne Ave	Addition of two (2) new dwelling units to existing duplex	CC	2017	2017	Completed - Occupied	01/13/2015	Gabriela Silva (310) 253-5736
13	C3 - Office & Retail Building	700-701 Corporate Pointe (Now 5800 Bristol Parkway and 5801 Hannum Ave)	7-story 281,400 G.S.F. office building and 9-story parking structure	CC	2017	2017	Completed - Occupied	SPR-8/12/87 SPR/M 11/12/2014 13th Amend extend DDA to 2017	Jose Mendivil (310) 253-5757
14	Arora Condominiums	3837 Bentley Avenue	Three (3) new condominium dwelling units, resulting in two (2) net new dwellings	CC	2018	TBD	Construction	04/08/2015	Gabriela Silva (310) 253-5736
15	3-unit Washington Place Condos	12464 Washington Place	Three (3) new condominium dwelling units and demolition of single family dewlling, resulting in two (2) net new dwellings	CC	2018	TBD	Construction	04/26/2017	Gabriela Silva (310) 253-5736
16	Retail Building	3030 La Cienega Blvd	Addition of 1,250 sq. ft. of retail floor area to an existing 8,338 sq. ft. retail building, and new tandem parking	CC	2018	TBD	Construction	06/19/2017	Planning Division (310) 253-5710
17	Shell Carwash	11224 Venice Blvd	New 3,150 sq. ft. commercial building, which includes a 2,285 sq. ft. convenience store and 864 sq. ft. automated car wash facility, on a vacant site	CC	2018	TBD	Construction	12/9/2015	Gabriela Silva (310) 253-5736
18	SPP Site 8-story Office Building Renovation	10000 Washington Blvd	Renovation of existing 8-story office building. Convert ground floor office space to retail and restaurant space. Total net increase of 10,614 sq. ft. of floor area, including a net reduction of 1,497 sq. ft. of office, increase of 8,424 sq. ft. of retail/ restaurant and 3,687 sq. ft. of fitness	CC	2019	TBD	Construction	06/22/2016	Susan Yun 310-253-5755

No.	Project Name	Address	Description	City	Est. Date Completion	Completed Date	Project Phase 1. Pre-Application 2. Entitlement 3. Pre-Building Permit 4. Building Permit 5. Construction 6. Completed (Occupied?)	Date of Entitlement Approval	Planner
19	Office Building	9919 Jefferson Blvd	New 3-story, 62,558 sq. ft., office and research and development (laboratory) building, as well as a five (5) level parking structure containing 398 parking spaces, and associated site improvements	CC	2019	TBD	Construction	10/26/2016	Gabriela Silva (310) 253-5736
20	West Los Angeles Community College Master Plan and EIR (2010)	LA County	Approximately 92,000 sq. ft. of new building construction and renovation. Anticipate future student population of approx. 18,904 students.	LA County	2019	TBD	Construction	EIR Certified 2004	Susan Yun (310) 253-5755
21	Grandview Apartments	4025 Grand View Blvd	New 3-story, for lease housing development, consisting of 36 units, with subterranean parking. Previous/Existing use includes 20 mobile home units.	CC	2019	TBD	Construction	01/27/2016 (PC) 03/28/2016 (CC)	Jose Mendivil (310) 25-5757
22	Three unit condominium/ townhome Redevelopment	4241 Duquesne Avenue	New three detached condominium/ townhomes, resulting in two (2) net new residential dwelling units	CC	2019	TBD	Construction	03/09/2016 (CC) 05/09/2016 (CC)	Jose Mendivil (310) 253-5757
23	New 4-unit Condo	4034 La Salle Avenue	New four (4) unit residential condominium project, resulting in a net increase of three (3) dwelling units	CC	2019	TBD	Construction	09/28/2016	William Kavadas (310) 253-5706
24	5-unit Condominiums	3961 Tilden Avenue	Construction of five (5) new residential condominium units, resulting in two (2) net new residential dwelling units	CC	2019	TBD	Construction	06/08/2016 (PC) 07/25/2016 (CC)	Gabriela Silva (310) 253-5736
25	Parcel B - Culver Steps	9300 Culver Blvd	118,000 G.S.F. of office, retail, and restaurant space.	CC	2019	TBD	Construction	07/07/2012	Susan Yun (310) 253-5755
26	Baldwin Site	12803 Washington Blvd	New 4 story mixed use project, cosisting of 37 dwelling units and 7,206 sq. ft. of ground floor retail, on currently vacant site	CC	2019	TBD	Construction	07/27/2016 (PC) 09/12/2016 (CC)	Jose Mendivil (310) 253-5757
27	Ivy Station Washington/ National TOD Comprehensive Plan	8824 National Blvd Corner of Washington Blvd/ National Blvd	New TOD mixed use project consisting of a 148 room boutique hotel, approximately 57,742 gsf of retail and restaurant uses, 196,333 gsf of office use, and 200 residential units. Parking (1,531 spaces) provided on grade and in 3-level subterranean garage.	CC	2019	TBD	Construction	02/17/2016 (PC) 03/28/2016 (CC)	Susan Yun (310) 253-5755

No.	Project Name	Address	Description	City	Est. Date Completion	Completed Date	Project Phase 1. Pre-Application 2. Entitlement 3. Pre-Building Permit 4. Building Permit 5. Construction 6. Completed (Occupied?)	Date of Entitlement Approval	Planner
28	Lenawee-Culver Place	3814 Lenawee Avenue	New 8 single family dwelling units and 95 unit, 110 bed, assisted living and memory care facility	CC	2019	TBD	Construction	06/08/2016 (PC) 08/08/2016 (CC)	Jose Mendivil (310) 253-5757
29	Surfas Site	8777 Washington Blvd	New Office/Retail project, consisting of 128,000 sq. ft. of office, and 4,500 sq. ft. of retail/restaurant, with approximately 345 ground and subterranean (3 level) parking spaces	CC	2019	TBD	Construction	05/10/2017 (PC) 06/26/2017 (CC)	Susan Yun (310) 253-5755
30	Globe Housing Project	4044 - 4068 Globe Avenue	Comprehensive Plan and Planned Development for a total of 10 new, for sale, residential dwelling units on currently vacant land; however, the site was previously developed with 7 single family homes.	CC	2019	TBD	Construction	03/23/2016 (PC) 05/05/2016 (CC)	Jose Mendivil (310) 253-5757
31	New 4-unit Condo	4180 Duquesne Avenue	New four (4) unit residential condominium project, resulting in a net increase of three (3) dwelling units	CC	2019	TBD	Construction	09/28/2016	William Kavadas (310) 253-5706
32	4-unit Condos	3832 Bentley Avenue	Four (4) new condominium dwelling units, resulting in three (3) net new dwellings	CC	2019	TBD	Construction	02/22/2017	Gabriela Silva (310) 253-5736
33	New 3-unit Condo	4234 Sawtelle Blvd	New three (3) unit residential condominium project, resulting in a net increase of two (2) dwelling units	CC	2019	TBD	Construction	03/08/2017	Planning Division (310) 253-5710
34	4-unit Townhome Development	4118 Wade Street	Sudivision of one parcel into four (4) townhome-style dwelling units, resulting in a net increase of one (1) new unit	CC	2019	TBD	Construction	06/12/2017 (PC) 09/11/2017 (CC)	Jose Mendivil (310) 253-5757
35	Culver West Mixed Use Washington/Inglewood	11924 Washington Blvd	Mixed use project with 3,750 sq. ft. of restaurant, 11,250 sq. ft. of specialty retail, and 98 for lease residential apartment units. Previous use includes approximately 26,445 sq. ft. of commercial uses	CC/LA	2019	TBD	Construction	12/09/2015 (PC) 06/08/2016 (LA City)	Jose Mendivil (310) 253-5757

No.	Project Name	Address	Description	City	Est. Date Completion	Completed Date	Project Phase 1. Pre-Application 2. Entitlement 3. Pre-Building Permit 4. Building Permit 5. Construction 6. Completed (Occupied?)	Date of Entitlement Approval	Planner
36	Synapse Office and Retail/Restaurant (ICC site)	8888 Washington Blvd	New 91,952 square foot, four (4) story, 56 ft. high, office and retail/restaurant building, including approximately 5,972 sq. ft. of ground floor space (for retail/restaurant uses) and 56,559 gsf of office space, and subterranean (24 ft. deep) automated parking accommodating up to 210 vertically stacked vehicles (3 stacked levels); the existing auto collision repair center will be demolished.	CC	2019	TBD	Construction	03/22/2017	Susan Yun (310) 253-5755
37	3906-3910 Sawtelle Blvd	3906-3910 Sawtelle Blvd	Addition of one (1) new dwelling unit to an existing triplex	CC	2019	TBD	Building Permit	06/19/2017	Gabriela Silva (310) 253-5736
38	3-unit Bentley Condos	3873 Bentley Avenue	Three new residential condominium units, resulting in two (2) net new residential dwelling units	CC	2019	TBD	Building Permit	02/22/2017	William Kavadas 310-253-5706
39	Auto Repair Facility	2926 La Cienega Blvd	Four (4) bay auto repair use within existing car rental facility	CC	2019	TBD	Building Permit	08/08/2018	Jose Mendivil (310) 253-5757
40	Lorcan O'Herlihy Architects	3434 Wesley Street	New TOD Mixed Use project with 15 dwelling units, and 14,237sq. ft. of office/gallery on a vacant lot.	CC	2019	TBD	Building Permit	10/26/2016 (PC) 02/13/2017 (CC)	William Kavadas (310) 253-5706
41	Entrada Office Tower	6161 Centinela Blvd	New 281,194 sq. ft. creative office building	CC	2019	TBD	Building Permit	11/09/2016	Planning Division (310) 253-5710
42	6-unit Housing Complex	4227 Ince Boulevard	Sudivision of one parcel into three (3) land lots with two (2) dwelling units each, for a total of six (6) new units, resulting in five (5) net new units	CC	2019	TBD	Building Permit	02/22/2017 (PC) 04/11/2017 (CC)	Jose Mendivil (310) 253-5757
43	2-unit Condominium	9615 Lucerne Ave	Two (2) new residential condominium dwellings, resulting in one (1) net new dwelling unit	CC	2019	TBD	Pre-Building Permit	09/27/2017	William Kavadas (310) 253-5706
44	New 2-story office building	12038 Washington Blvd	New 2-story, 2,685 sq. ft. office building; existing 1,200 sq. ft. retail building to be demolished	CC	2019	TBD	Pre-Building Permit	05/08/2017	Planning Division (310) 253-5710

No.	Project Name	Address	Description	City	Est. Date Completion	Completed Date	Project Phase 1. Pre-Application 2. Entitlement 3. Pre-Building Permit 4. Building Permit 5. Construction 6. Completed (Occupied?)	Date of Entitlement Approval	Planner
45	Mixed-Use with Density Bonus	11281 Washington Place	New mixed use development consisting of 14 residential units and 4,897 sq. ft. of retail space	CC	2019	TBD	Pre-Building Permit	03/22/2017 (PC) 05/30/2017 (CC)	Jose Mendivil (310) 253-5757
46	Willows School CUP Modification	8509 Higuera Street 8476 Warner Drive	Modification to previously approved CUP to allow a playfield and increase student enrollment by 100, from 475 to 575, consistent with School Master Plan.	CC	2019	TBD	Entitlement	TBD	Jose Mendivil (310) 253-5757
47	4-Story Commercial	5645 Sepulveda Blvd	New 4-story office building approximately 3,193 sq. ft. retail on ground floor and 38,712 sq. ft. medical office, 5-level subterranean garage (198 parking spaces). Demolition of approximately 5,000 sq. ft. of existing commercial building.	CC	2019	TBD	Pre-Application	TBD	Planning Division (310) 253-5710
48	Market Hall - Washington Centinela	12403 (12237-12423) Washington Boulevard	New multi-story 21,605 sq. ft. market hall and food retail building with attached parking structure (184 spaces) and a new single story 5,230 sq. ft. retail building with surface parking (20 spaces), on two currently vacant sites	CC	2020	TBD	Building Permit	10/25/2017 (PC) 01/22/2018 (CC) 02/12/2018 (CC)	Gabriela Silva (310) 253-5736
49	Culver Studios Innovation Plan Comprehensive Plan Amendment No.7	9336 Washington Blvd	New production office buildings to replace existing outmoded structures, to include 345,007 square feet of net new production space.	CC	2020	TBD	Building Permit	12/13/2017 (PC) 01/08/2018 (CC) 1/22/2018 (CC)	Susan Yun (310) 253-5755
50	Warner Parking Structure	8511 Warner Drive	51,520 G.S.F. Retail/Restaurant;784 parking spaces, five levels; site currently developed as a surface parking lot	CC	2020	TBD	Pre-Building Permit	08/03/2009 ET - 01/10/2018	Jose Mendivil (310) 253-5757
51	The Brick and the Machine	9735 Washington Boulevard	New 3- to 4-story office and retail building consisting of 55,477 sq. ft. of office (upper floors), 12,249 sq. ft. of retail, 2,147 sq. ft. high turnover restaurant, and 2,000 sq. ft. of quality restaurant (on ground floor), and a 3-level, 228 space, subterranean parking garage. The existing vacant 16,200 sq. ft. bank and office building to be demolished.	CC	2020	TBD	Entitlement	10/22/2018 (1st Reading)	Jose Mendivil (310) 253-5757

No.	Project Name	Address	Description	City	Est. Date Completion	Completed Date	Project Phase 1. Pre-Application 2. Entitlement 3. Pre-Building Permit 4. Building Permit 5. Construction 6. Completed (Occupied?)	Date of Entitlement Approval	Planner
52	Stacked Parking - NFL Building	10950 Washington Blvd	Addition of approximately 150 parking spaces through installation of two (2) to four (4) level parking stackers and surface lot restriping for tandem parking to support exisitng media offices. No additional square feet.	CC	2020	TBD	Entitlement	TBD	Gabriela Silva (310) 253-5736
53	Office Building	11259 Washington Blvd APN: 4233-033-021	New 3-story, 4,022 sq. ft. office building with at-grade parking, on a currently vacant site	CC	2020	TBD	Entitlement	TBD	Jose Mendivil (310) 253-5757
54	Jackson Condos	4051 and 4055 Jackson Ave	New nine (9) unit residential condominium project replacing six (6) existing units, for a net increase of three (3) dwelling units	CC	2020	TBD	Entitlement	TBD	Jose Mendivil (310) 253-5757
55	The Bridge	6066 Washington Blvd	Addition of 3,246 sq. ft. of commercial (office) floor area with additional stacked/ automated parking, to an existing 5,231 commercial building	CC	2020	TBD	Pre-Application	TBD	Gabriela Silva (310) 253-5736
56	4-unit La Salle Condo's	4030 La Salle Ave	Four (4) new condominium dwelling units, resulting in three (3) net new dwelling units	CC	2020	TBD	Pre-Application	TBD	William Kavadas (310) 253-5706
57	2-unit Condominium	4225 La Salle Ave	Two (2) new condominium dwelling units, resulting in one (1) net new dwelling unit	CC	2020	TBD	Pre-Application	TBD	William Kavadas (310) 253-5706
58	4-unit Sawtelle Condominiums	4041 Sawtelled Blvd	Four (4) new condominium dwelling units, resulting in three (3) net new dwelling units	CC	2020	TBD	Pre-Application	TBD	Gabriela Silva (310) 253-5736
59	2-unit Condominium	4116 Higuera St	Two (2) new condominium dwelling units, resulting in one (1) net new dwelling unit	CC	2020	TBD	Pre-Application	TBD	William Kavadas (310) 253-5706
60	4-unit Madison Condo's	4044 Madison Ave	Four (4) new condominium dwelling units, resulting in three (3) net new dwelling units	CC	2020	TBD	Pre-Application	TBD	William Kavadas (310) 253-5706
61	4-unit condominium	3846 Bentley Ave	Four (4) new condominium dwelling units, resulting in three (3) net new dwelling units	CC	2020	TBD	Pre-Application	TBD	William Kavadas (310) 253-5706
62	Automated Parking	5977 Washington Blvd	New 48 space stacked parking facility on a property with a vacant commercial building, to serve as off-site parking for commercial building at 5965 Washington Blvd.	CC	2020	TBD	Pre-Application	TBD	Jose Mendivil (310) 253-5757

No.	Project Name	Address	Description	City	Est. Date Completion	Completed Date	Project Phase 1. Pre-Application 2. Entitlement 3. Pre-Building Permit 4. Building Permit 5. Construction 6. Completed (Occupied?)	Date of Entitlement Approval	Planner
63	Robertson Mixed Use	3727 Robertson Blvd	New 4-story mixed-use development, including approximately 8,135 sq. ft. of commercial floor area and eight (8) dwelling units. Demolition of approx. 6,800 sq. ft. 1-story commercial building and surface parking.	CC	2020	TBD	Pre-Application	TBD	Gabriela Silva (310) 253-5736
64	Washington/Tivoli Mixed Use Project	13112-13114 Washington Bl	Mixed-use project with 1,536 sq. ft. of retail/restaurant (breakdown unkown at this time), 3,702 sq. ft. of office, and two (2) for-lease residential dwelling units. Previous/Existing uses: vacant land	CC	2020	TBD	Pre-Application	TBD	Planning Division 310-253-5710
65	Boutique Hotel	11469 Jefferson Blvd	Demolition of 12,958 sq. ft. commercial shopping center. New 5-story hotel of 183 rooms with restaurant and outdoor dining.	CC	2020	TBD	Pre-Application	TBD	Jose Mendivil (310) 253-5757
66	Park Century School	3939 Landmark Street	New athletic field, 2,441 sq. ft. classroom building, and two-level subterranean parking, to allow an increase in student enrollment from 120 to 170 and increase of 20 staff people.	CC	2020	TBD	Pre-Application	TBD	Jose Mendivil (310) 253-5757
67	ECF Site	8700, 8710, 8740, and 8750 Washington Boulevard	Preliminary Concept - Mixed Use TOD with approximately 199 residential units and 40,00 sq. ft. of commercial space (17,250 sq. ft. of live/work space, 5,000 sq. ft. of restaurant, and 17,750 sq. ft. of retail), on a 3.06 to possibly 3.53 acre site, currently developed with multiple uses	CC	2021	TBD	Pre-Application	TBD	Susan Yun (310) 253-5755
68	New Assisted Living Facility	11141 Washington Blvd	New 5-story, 157,500 sq. ft., 117 room assisted living facility, with subterranean parking. Exisitng 24,200 sq. ft. of commercial (retail, office, etc.) uses will be demolished.	CC	2021	TBD	Pre-Application	TBD	Gabriela Silva (310) 253-5736
69	Vista Del Sol - Assisted Living Expansion	11620 Washington Blvd	New 5-story, 72 bed, 33,747 sq. ft. expansion to exisitng assisted living facility.	CC	2021	TBD	Pre-Application	TBD	Jose Mendivil (310) 253-5757
70	New Hotel	3868-3900 Sepulveda Blvd	New 5-story, 85,676 sq. ft., 118 room hotel with 2,000 sq. ft. retail space. Existing hotels totaling 75 rooms will be demolished.	CC	2021	TBD	Pre-Application	TBD	Jose Mendivil (310) 253-5757

No.	Project Name	Address	Description	City	Est. Date Completion	Completed Date	Project Phase 1. Pre-Application 2. Entitlement 3. Pre-Building Permit 4. Building Permit 5. Construction 6. Completed (Occupied?)	Date of Entitlement Approval	Planner
71	Jazz Bakery	9814 Washington Blvd	New 200 seat Performace Theatre with a museum and bakery/café, 2-stories & estimated 7,500 sqaure feet, on a property developed with a vacant residential structure	CC	2021	TBD	Pre-Application	TBD	Planning Division (310) 253-5710
72	Bristol Parkway Mixed Use	6201 Bristol Parkway	A new mixed-use development on a 6.26 acre site in the Fox Hills area, consisting of 20,767 sq. ft. of commercial/retai uses, 712 residential dwelling units (including 50 live-work units), and approximately 850 subterranean parking spaces. Existing shopping center (approximately 60,000 sq. ft. of commercial floor area) to be demolished.	CC	2021	TBD	Pre-Application	TBD	Planning Division (310) 253-5710
73	Federal Express Site	3710 and 3750 S. Robertson Boulevard	Preliminary Concept - Mixed Use TOD with approximately 141 residential units and 64,200 sq. ft. of creative office and 30,042 sq. ft. commercial (retail/restaurant/live-work space), on a 2.2 acre site.	CC	2021	TBD	Pre-PPR	TBD	Susan Yun (310) 253-5755

Sorted by Estimated Date of Completion

CLATS

Case Logging and Tracking System

Welcome **pedro**! | Log Out | Profile | Admin

RELATED PROJECTS

Centroid Info:
PROJ ID: 43301
Address: 11469 JEFFERSON BLVD
CULVER CITY, CA 90230
Lat/Long: 33.9891, -118.398

Buffer Radius: 2.50 mile

Search

Column

Include NULL "Trip info":
Include NULL "FirstStudySubmittalDate" (latest)
Include "Inactive" projects:
Include "Do not show in Related Project":

Net_AM_Trips - Select -
Net_PM_Trips - Select -
Net_Daily_Trips - Select -

Record Count: 31 | Record Per Page: All Records

Results generated since: (3/13/2019 7:10:17 PM)

Proj ID	Office	Area	CD	Year	Project Title	Project Desc	Address	First Study Submittal Date	Inactive	Do not show in Related Project	Distance (mile)	Trip Info
43404	Westchester	CTC	11	2015	6733 Sepulveda	176U Apt	6733 S SEPULVEDA BL	07/15/2015	☐	☐	0.7	
43597	Westchester	CTC	11	2015	Teledyne Office Project	159,000 sf creative office	12964 W Panama Street	02/02/2016	☐	☐	1.8	
43616	Westchester	CTC	11	2015	Charter Middle School	Proposed Charter Middle School for maximum enrollment of 525 students	8540 S LA TIJERA BLVD	01/06/2016	☐	☐	2.0	
43673	Westchester	CTC	11	2015	Mixed Use 49 Apts & Restaurant	New Mixed-use with 49 Apts + 1.7KSF Restaurant replaces Ex Nursery	11612 W CULVER BLVD	11/19/2015	☐	☐	1.2	
43866	Westchester	CTC	11	2015	New Muti-Story Office Building	Demolish Ex 23 KSF Office Building & Construct 250 KSF Office Building	12575 W BEATRICE ST	03/21/2016	☐	☐	1.2	
44032	Westchester	CTC	11	2016	Expansion of Charter School	ICEF Vista High School & Middle School	4471 INGLEWOOD BLVD	03/21/2016	☐	☐	1.3	

Trip Info — 43404

Land_Use	Unit_ID	size	Net_AM_Trips	Net_PM_Trips	Net_Daily_Trips	NetAMIn	NetAMOut	NetPMIn	NetPMOut
Apartments	Total Units	176	24	12	628	-31	55	52	-40
			24	**12**	**628**		**-31**	**55**	**52**

Trip Info — 43597

Land_Use	Unit_ID	size	Net_AM_Trips	Net_PM_Trips	Net_Daily_Trips	NetAMIn	NetAMOut	NetPMIn	NetPMOut
Office	S.F. Gross Area	159000	81	91	777	72	9	20	71
			81	**91**	**777**		**72**	**9**	**20**

Trip Info — 43616

Land_Use	Unit_ID	size	Net_AM_Trips	Net_PM_Trips	Net_Daily_Trips	NetAMIn	NetAMOut	NetPMIn	NetPMOut
School	Enrollment	350	315	210	868	173	142	99	111
			315	**210**	**868**		**173**	**142**	**99**

Trip Info — 43673

Land_Use	Unit_ID	size	Net_AM_Trips	Net_PM_Trips	Net_Daily_Trips	NetAMIn	NetAMOut	NetPMIn	NetPMOut
Apartments	Occupied Units	47	38	43	447	12	26	28	15
Retail	S.F. Gross Area	2050							
			38	**43**	**447**		**12**	**26**	**28**

Trip Info — 43866

Land_Use	Unit_ID	size	Net_AM_Trips	Net_PM_Trips	Net_Daily_Trips	NetAMIn	NetAMOut	NetPMIn	NetPMOut
Office	S.F. Gross Area	199500	275	334	1946	242	33	57	277
			275	**334**	**1946**		**242**	**33**	**57**

Trip Info — 44032

Land_Use	Unit_ID	size	Net_AM_Trips	Net_PM_Trips	Net_Daily_Trips	NetAMIn	NetAMOut	NetPMIn	NetPMOut
School	Enrollment	800	100	67	275	55	45	31	36
			100	**67**	**275**		**55**	**45**	**31**

					Expansion Project						
44355	Westchester	WLA	5	2016	New 6-Story Mixed-Use	66-Unit Apartment & ground floor Shopping Center with sub. garage.	10801 W VENICE BLVD	12/22/2016	☐	☐	2.1

Land_Use	Unit_ID	size	Net_AM_Trips	Net_PM_Trips	Net_Daily_Trips	NetAMIn	NetAMOut	NetPMIn	NetPMOut
Mixed Use	Other		20	59	430	-5	25	41	18
			20	**59**	**430**		**-5**	**25**	**41**

44419	Westchester	CTC	11	2016	Jandy Creative office	Creative office and Parking	5405 S JANDY PL	06/05/2017	☐	☐	1.2

Land_Use	Unit_ID	size	Net_AM_Trips	Net_PM_Trips	Net_Daily_Trips	NetAMIn	NetAMOut	NetPMIn	NetPMOut
Office	S.F. Gross Area	93950	96	184	613	86	10	30	154
			96	**184**	**613**		**86**	**10**	**30**

44456	Westchester	CTC	11	2016	COU Warehouse to Office	COU Warehouse (24,051 SF) to Office, with 7,926 SF Office Addition	4721 S ALLA RD	08/18/2016	☐	☐	1.9

Land_Use	Unit_ID	size	Net_AM_Trips	Net_PM_Trips	Net_Daily_Trips	NetAMIn	NetAMOut	NetPMIn	NetPMOut
Office	S.F. Gross Area	118352	43	57	267	38	5	9	48
			43	**57**	**267**		**38**	**5**	**9**

44720	Westchester	WLA	5	2016	Mixed-Use (Residential & Retail)	7-story, Mixed-Use Bldg: 108-Unit Condo & 3,600 SF ground floor Retail	10375 W WASHINGTON BLVD	01/30/2017	☐	☐	2.1

Land_Use	Unit_ID	size	Net_AM_Trips	Net_PM_Trips	Net_Daily_Trips	NetAMIn	NetAMOut	NetPMIn	NetPMOut
Mixed Use	Other		32	42	579	-3	35	31	11
			32	**42**	**579**		**-3**	**35**	**31**

44829	Westchester	CTC	11	2016	Mixed-Use, Residential, Restaurant & Commercial	new Mixed-Use: 658-Unit Apt, 13.5 ksf Restaurant & 13.5 ksf Commercial	13400 W Maxella Ave	04/28/2017	☐	☐	2.5

Land_Use	Unit_ID	size	Net_AM_Trips	Net_PM_Trips	Net_Daily_Trips	NetAMIn	NetAMOut	NetPMIn	NetPMOut
Mixed Use	Total Units	658	296	83	2079	60	236	115	-32
			296	**83**	**2079**		**60**	**236**	**115**

44850	Westchester	CTC	11	2016	Charter School	Relocation of the Ocean Charter School w/ 532-student enrollment (K-8)	12870 W PANAMA ST	11/30/2016	☐	☐	1.7

Land_Use	Unit_ID	size	Net_AM_Trips	Net_PM_Trips	Net_Daily_Trips	NetAMIn	NetAMOut	NetPMIn	NetPMOut
School	Enrollment	532	479	168	1320	263	216	79	89
			479	**168**	**1320**		**263**	**216**	**79**

45237	Westchester	WLA	5	2016	New Starbucks Coffee Shop	Vacant Lot to New Drive-Thru Only Starbucks with Outdoor Seating	3505 S SEPULVEDA BL	06/08/2017	☐	☐	2.5

Land_Use	Unit_ID	size	Net_AM_Trips	Net_PM_Trips	Net_Daily_Trips	NetAMIn	NetAMOut	NetPMIn	NetPMOut
Other	S.F. Gross Area	1080	109	46	884	56	53	23	23
			109	**46**	**884**		**56**	**53**	**23**

45275	Westchester	CTC	11	2016	COU Office to Medical Office	Change of Use from Office to Medical Office within 3rd Floor Only	12555 W JEFFERSON BLVD	06/11/2018	☐	☐	1.1

Land_Use	Unit_ID	size	Net_AM_Trips	Net_PM_Trips	Net_Daily_Trips	NetAMIn	NetAMOut	NetPMIn	NetPMOut
Other	S.F. Gross Area	20981	36	57	542	28	8	16	41
			36	**57**	**542**		**28**	**8**	**16**

45540	Westchester	CTC	11	2017	Vacant to Office	Addition of two mezzanines	11811 S TEALE ST	05/10/2017	☐	☐	0.3

Land_Use	Unit_ID	size	Net_AM_Trips	Net_PM_Trips	Net_Daily_Trips	NetAMIn	NetAMOut	NetPMIn	NetPMOut
Office	S.F. Gross Area	10925	17	31	121	15	2	5	26

						2,450 SF within an existing 8,475 SF Bldg.															
														17	**31**	**121**		**15**	**2**	**5**
45788	Westchester	WLA	10	2017	Office, Retail & Restaurant	64ksf Office, 2ksf Retail, 2ksf Quality & 2ksf Hi-Turnover Restaurant	5950 W JEFFERSON BLVD	10/13/2017	☐	☐	2.5	Office	S.F. Gross Area	70000	78	81	716	65	13	23	58
															78	**81**	**716**		**65**	**13**	**23**
45978	Westchester	CTC	11	2017	Apartments, 86 Units	new 5-story, 86-DU Apt. & 561 sf commercial space over 2-level parking	8521 S SEPULVEDA BL	11/13/2017	☐	☐	2.0	Apartments	Total Units	87	45	63	602	11	34	40	23
												Apartments	Total Units	87	47	71	669	12	35	44	27
															92	**134**	**1271**		**23**	**69**	**84**
46007	Westchester	CTC	11	2017	New Apartment Building	New 180-Unit Apartment Building	6711 S SEPULVEDA BL	08/10/2017	☐	☐	0.7	Apartments	Total Units	180	87	110	1063	17	70	73	37
															87	**110**	**1063**		**17**	**70**	**73**
46346	Westchester	CTC	11	2017	New Smart & Final Supermarket	New Smart & Final Ground Up 22,590 sf Construction on Vacant Pkg. Lot	6855 S La Cienega Bl	01/12/2018	☐	☐	1.8	Retail	S.F. Gross Area	22590	42	148	1520	25	17	74	74
															42	**148**	**1520**		**25**	**17**	**74**
46639	Westchester	CTC	11	2017	Chick-Fil-A Fast Food Restaurant	new Fast Food Restaurant with Drive Thru Window (4,642 sf Chick-Fil-A)	5208 W CENTINELA AV	03/30/2018	☐	☐	1.8	Other	S.F. Gross Area	4642	93	74	1093	47	46	38	36
															93	**74**	**1093**		**47**	**46**	**38**
13290	Westchester	WLA	5	2008	The Palms Mixed-Use Project	132 aptm, 26ksf office & 18ksf retail	10601 W WASHINGTON BLVD	05/09/2010	☐	☐	2.0	Apartments	Total Units	126	64	78	838	13	51	51	27
												Office	S.F. Gross Area	23000	35	34	253	31	4	6	28
												Retail	S.F. Gross Area	9000	9	33	386	5	4	16	17
												Other	S.F. Gross Area	4500	52	50	572	27	25	30	20
												Other	S.F. Gross Area	4500	4	34	405	2	2	23	11
												Office	S.F. Gross Area	10100	-16	-15	-111	-14	-2	-3	-12
															148	**214**	**2343**		**64**	**84**	**123**
13305	Westchester	CTC	11	2008	LMU Master Plan	Update to LMU Master Plan	1 LMU Dr	09/02/2009	☐	☐	2.0	School	Enrollment	7800	176	223	2540	146	30	112	111
															176	**223**	**2540**		**146**	**30**	**112**

40476	Westchester	CTC	11	2012	Mixed-Use (140-Unit Apartment and 2,600 SF Retail	New 140-DU Apt & 2,600 SF Retail over 241-space,3-level parking garage	7407 S LA TIJERA BLVD	10/09/2012			1.6

Land_Use	Unit_ID	size	Net_AM_Trips	Net_PM_Trips	Net_Daily_Trips	NetAMIn	NetAMOut	NetPMIn	NetPMOut
Mixed Use	Total Units	140	65	83	799	10	55	57	26
			65	**83**	**799**		**10**	**55**	**57**

41837	Westchester	CTC	11	2014	OTIS College Consolidation & Relocation	Relocate & Consolidate existing OTIS Campus students, faculty & Staff	9045 S LINCOLN BLVD	02/28/2014			2.5

Land_Use	Unit_ID	size	Net_AM_Trips	Net_PM_Trips	Net_Daily_Trips	NetAMIn	NetAMOut	NetPMIn	NetPMOut
School	Enrollment	78	5	-6	-48	4	1	-10	4
			5	**-6**	**-48**		**4**	**1**	**-10**

42422	Westchester	WLA	5	2014	New 7 Story (86 Apts)	7-Story Apt Building with 86 Apts over Ground Floor Parking Garage.	3822 S DUNN DR	09/23/2014			2.3

Land_Use	Unit_ID	size	Net_AM_Trips	Net_PM_Trips	Net_Daily_Trips	NetAMIn	NetAMOut	NetPMIn	NetPMOut
Apartments		86	42	50	543	9	33	32	18
			42	**50**	**543**		**9**	**33**	**32**

42450	Westchester	CTC	11	2014	Hooman	113 ksf auto dealership.	5748 mesmer	10/05/2016			0.4

Land_Use	Unit_ID	size	Net_AM_Trips	Net_PM_Trips	Net_Daily_Trips	NetAMIn	NetAMOut	NetPMIn	NetPMOut
Other	S.F. Gross Area	113163	183	266	2694	139	44	90	176
			183	**266**	**2694**		**139**	**44**	**90**

42565	Westchester	CTC	11	2014	12777 Jefferson	Office expansion, 49,950sf	12777 W JEFFERSON BLVD	12/18/2014			1.4

Land_Use	Unit_ID	size	Net_AM_Trips	Net_PM_Trips	Net_Daily_Trips	NetAMIn	NetAMOut	NetPMIn	NetPMOut
Office	S.F. Gross Area	49950	77	100	550	68	9	17	83
			77	**100**	**550**		**68**	**9**	**17**

42607	Westchester	CTC	11	2014	Apartments, 137 Units	New 137-DU Apt Bldg replace exist Westchester Secondary Charter School	8740 S LA TIJERA BLVD	01/29/2015			2.2

Land_Use	Unit_ID	size	Net_AM_Trips	Net_PM_Trips	Net_Daily_Trips	NetAMIn	NetAMOut	NetPMIn	NetPMOut
Apartments	Total Units	137	-64	56	508	-60	-4	42	14
			-64	**56**	**508**		**-60**	**-4**	**42**

43133	Westchester	CTC	11	2015	Marina Island	156U Apt, 33,484sf Office	5000 S Beethoven St	10/26/2015			1.6

Land_Use	Unit_ID	size	Net_AM_Trips	Net_PM_Trips	Net_Daily_Trips	NetAMIn	NetAMOut	NetPMIn	NetPMOut
Apartments	Total Units	236	120	165	1569	24	96	107	58
			120	**165**	**1569**		**24**	**96**	**107**

43372	Metro	MTR	10	2015	Office	25032 SF Office	3640 S Holdrege Av	06/19/2015			2.4

Land_Use	Unit_ID	size	Net_AM_Trips	Net_PM_Trips	Net_Daily_Trips	NetAMIn	NetAMOut	NetPMIn	NetPMOut
Office	S.F. Gross Area	25032	31	29	187	28	3	4	25
			31	**29**	**187**		**28**	**3**	**4**

46986	Metro	MTR	10	2018	Coffee Bean & Tea Leaf	123.527ksf off., 64.206ksf manufact.,& 2.2ksf coffee shop w/drive thru	6024 W JEFFERSON BL	07/20/2018			2.4

Land_Use	Unit_ID	size	Net_AM_Trips	Net_PM_Trips	Net_Daily_Trips	NetAMIn	NetAMOut	NetPMIn	NetPMOut
Office	S.F. Gross Area	123537	262	223	2177	194	68	55	168
Other	S.F. Gross Area	64206							
Other	S.F. Gross Area								
			262	**223**	**2177**		**194**	**68**	**55**

ATTACHMENT 6

PROPOSED STUDY INTERSECTIONS AND RESIDENTIAL STREET SEGMENTS



ATTACHMENT 6

3/12/2019

FN: JEFFERSON HOTEL CULVER\STUDY-INTS

PROPOSED STUDY INTERSECTIONS AND RESIDENTIAL STREET LOCATIONS

CRAIN & ASSOCIATES
Transportation Planning
Traffic Engineering
300 Corporate Pointe, Suite 470
Culver City, California 90230
PH (310) 473 6508 F (310) 444 9771
www.crainandassociates.com

ATTACHMENT 7

CALTRANS FREEWAY IMPACT ANALYSIS SCREENING

ATTACHMENT 7

JEFFERSON HOTEL PROJECT
(11469 JEFFERSON BOULEVARD, CULVER CITY)
FREEWAY IMPACT ANALYSIS SCREENING

The following State of California Department of Transportation ("Caltrans") freeway impact analysis screening has been performed for the Jefferson Hotel project (the "Project") as part of the Traffic Impact Study Memorandum of Understanding (MOU), per the criteria set forth in the October 2013 *Agreement Between City of Los Angeles and Caltrans District 7 on Freeway Impact Analysis Procedures* (the "Agreement") and the December 2015 *First Amendment to the Agreement between LADOT and Caltrans District 7 on Freeway Impact Analysis Procedures* (the "Amendment").

Agreement and Amendment Freeway Impact Analysis Screening Criteria

Per Section 3 of the Agreement and the Amendment, the "City will require Project applicants to work with Caltrans and prepare a Freeway Impact Analysis, utilizing Caltrans' "Guide for the Preparation of Traffic Impact Studies" ("TIS Guide"), for land use proposals that meet any of the following criteria:

- The project's peak hour trips would result in a 1-percent or more increase to the freeway mainline capacity of a freeway segment operating at level-of-service (LOS) E or F (based on an assumed capacity of 2,000 vehicles per hour per lane); or
- The project's peak hour trips would result in a 2-percent or more increase to the freeway mainline capacity of a freeway segment operating at LOS D (based on an assumed capacity of 2,000 vehicles per hour per lane); or
- The project's peak hour trips would result in a 1-percent or more increase to the capacity of a freeway off-ramp operating at LOS E or F (based on an assumed ramp capacity of 850 vehicles per hour per lane); or
- The project's peak hour trips would result in a 2-percent or more increase to the capacity of a freeway off-ramp operating at LOS D (based on an assumed ramp capacity of 850 vehicles per hour per lane)."

The City of Culver City has adopted the abovementioned screening criteria in order to determine if analysis of Caltrans freeway facilities, beyond that required in the local Congestion Management Program (CMP), is necessary. Therefore, the analysis screening was performed for the Project.

Project Traffic Volume Contributions to State Facilities

In order to estimate the Project's traffic volume contributions to the freeway mainline and off-ramp locations most likely to be impacted by Project-related traffic, the Project's trip generation was first determined. In order to develop the traffic characteristics of the Project, the latest and most up-to-date version of the Institute of Transportation Engineers (ITE) *Trip Generation Manual* (10th Edition, 2017) was used. The trip generation rates in the ITE manual are nationally recognized and are used as the basis for most traffic studies conducted in the City of Culver City and surrounding region. Attachment 4 of this Traffic Study MOU presents the trip generation rates and summary for the Project's daily, AM peak-hour, and PM peak-hour traffic volumes. As shown, appropriate trip credits were applied to the baseline trip generation estimates to account for potential pass-by trip activity.

Estimation of the geographic distribution of Project trips was the next step in the analytical process. Project trip distribution patterns were developed based on the Project uses, existing traffic patterns, characteristics of the surrounding roadway system, the geographic location of the Project site and its proximity to freeways and major travel routes, and areas from and to which employees and patrons of the proposed hotel and existing specialty retail center would likely be attracted. Based on the abovementioned factors, the Project trip distribution percentages were determined and are summarized in Attachments 2 and 3 of this Traffic Study MOU.

The Project trip generation and trip distribution patterns were then used to determine the Project traffic volume contributions to State facilities in the vicinity of the Project site. Table 1 summarizes the anticipated Project traffic volume contributions to the freeway mainline and off-ramp locations most likely to be impacted by Project traffic.

Freeway Mainline Segment Impact Analysis Screening

In order to perform the freeway mainline segment impact analysis screening, an initial check was performed to see if the directional mainline segments most likely to be impacted by Project traffic would meet the trigger Project traffic volume contributions assuming the most constrained operations on each segment. This initial freeway mainline segment impact screening analysis is shown in Table 1. Per the Agreement, the trigger percentage is a 2 percent or more increase in traffic volumes for a mainline segment at LOS D or a 1 percent or more increase for a segment at LOS E/F. The volume increases are relative to an assumed mainline segment capacity of 2,000 vehicles per hour per lane, per the Agreement. Therefore, the 1 percent trigger percentage was applied assuming LOS E/F freeway mainline operations.

Comparing the traffic volume contributions required to trigger a freeway segment impact analysis at LOS E/F with the anticipated Project volume contributions at each location, the thresholds would not be triggered at any of the four (4) directional segment locations. Therefore, a freeway mainline segment impact analysis is not required.

Freeway Off-Ramp Impact Analysis Screening

In order to perform the freeway off-ramp impact analysis screening, an initial check was performed to see if the off-ramp locations most likely to be impacted by Project traffic would meet the trigger traffic volume contributions assuming the most constrained operations for each off-ramp. This initial freeway off-ramp screening analysis is shown in Table 1. Per the Agreement, the trigger percentage is a 2 percent or more increase in traffic volumes for a freeway off-ramp operating at LOS D or a 1 percent or more increase for an off-ramp at LOS E/F. These volume increases are relative to the assumed capacity of 850 vehicles per hour per lane, per the Agreement. Therefore, the 1 percent trigger percentage was applied assuming LOS E/F freeway off-ramp operations.

Comparing the traffic volume contributions required to trigger a freeway off-ramp impact analysis at LOS E/F with the anticipated Project volume contributions at each location, the thresholds may be triggered for the I-405 Freeway northbound off-ramp to Jefferson Boulevard during the AM and PM peak hours. Thus, further analysis of this location was performed to determine existing LOS operations during the AM and PM peak hours.

Manual turning movement counts were conducted at the freeway off-ramp terminus intersection during the weekday AM and PM peak hours on November 28, 2018. These counts were performed from 7:00 AM to 10:00 AM and 3:00 PM to 6:00 PM and represent typical weekday traffic conditions. Peak-hour volumes were determined individually for the off-ramp terminus intersection based on the highest-volume four consecutive 15-minute periods for all vehicular movements. The intersection count data sheets are provided in Appendix A.

The peak-hour LOS for the freeway off-ramp terminus intersection was determined using the Highway Capacity Manual (HCM) operational methodology for signalized intersections, as required by Caltrans. The HCM worksheets are included in Appendix B.

The freeway off-ramp impact screening analysis results are shown in Table 2. As indicated in the table, the existing off-ramp vehicle delays at the ramp terminus intersection were used to determine the LOS for the study freeway off-ramp location. As stated above, the trigger percentage is a 2 percent or more increase in traffic volumes for a freeway off-ramp operating at LOS D or a 1 percent or more increase for an off-ramp at LOS E/F. There is no trigger percentage for off-ramps operating at LOS A through C. As shown, the off-ramp approach at the I-405 Freeway northbound off-ramp to Jefferson Boulevard terminus intersection currently operates at LOS B during both the AM and PM peak hours. Therefore, there is no trigger percentage for this location and no further analysis is required.

TABLES

Table 1

Jefferson Hotel Project (11469 Jefferson Boulevard, Culver City)
Traffic Volume Contributions to State Freeway Mainline and Off-Ramp Facilities

PROJECT TRIP GENERATION

Project Trip Generation:	Proposed		Existing	
Direction	AM	PM	AM	PM
Inbound	48	54	-6	-18
Outbound	34	51	-4	-20

PROJECT TRAFFIC VOLUME CONTRIBUTIONS TO CALTRANS FREEWAY FACILITIES

FREEWAY MAINLINE VOLUME CALCULATIONS		Proj. Trip	Proposed Trips			Existing Trips			Project Net Trips		Number	Capacity	Total	Percentage Added by Project		Threshold Percentage	Exceeds Threshold
Mainline Segment Location	Direction	Direction	Percentage	AM	PM	Percentage	AM	PM	AM	PM	of Lanes	per Lane*	Capacity	AM	PM	For Screening*	at LOS E/F?
I-405 Fwy, n/o Jefferson Blvd	Southbound	Inbound	12%	5.8	6.5	12%	-0.7	-2.2	5.1	4.3	4	2000	8000	0.06%	0.05%	1.00%	No
	Northbound	Outbound	12%	4.1	6.1	12%	-0.5	-2.4	3.6	3.7	4	2000	8000	0.05%	0.05%	1.00%	No
I-405 Fwy, s/o Jefferson Blvd	Northbound	Inbound	20%	9.6	10.8	12%	-0.7	-2.2	8.9	8.6	4	2000	8000	0.11%	0.11%	1.00%	No
	Southbound	Outbound	20%	6.8	10.2	12%	-0.5	-2.4	6.3	7.8	4	2000	8000	0.08%	0.10%	1.00%	No
FREEWAY OFF-RAMP VOLUME CALCULATIONS																	
Off-Ramp Location																	
I-405 Fwy NB Off-Ramp to Jefferson Blvd	Northbound	Inbound	20%	9.6	10.8	12%	-0.7	-2.2	8.9	8.6	1	850	850	1.05%	1.01%	1.00%	Yes
I-405 Fwy SB Off-Ramp to Jefferson Blvd	Southbound	Inbound	12%	5.8	6.5	12%	-0.7	-2.2	5.1	4.3	1	850	850	0.60%	0.51%	1.00%	No

* Criteria for freeway mainline segments and off-ramps operating at LOS E or F per *Agreement Between City of Los Angeles and Caltrans District 7 On Freeway Impact Analysis Procedures, October 2013* and *First Amendment to the Agreement between LADOT and Caltrans District 7 on Freeway Impact Analysis Procedures, December 2015* .

Table 2

Jefferson Hotel Project (11469 Jefferson Boulevard, Culver City)
Freeway Off-Ramp Impact Analysis Screening

Freeway Off-Ramp Location	Peak Hour	Existing Traffic Volume[1]	Existing Off-Ramp Delay[2]	Existing Off-Ramp LOS	Off-Ramp Terminus # of Lanes	Trigger Percentage	Trigger Volume Contribution[3]	Project Volume Contribution	Exceed Trigger?
I-405 Fwy NB Off-Ramp to Jefferson Blvd	AM	848	19.1	B	2	NA	NA	8.9	No
	PM	762	14.1	B	2	NA	NA	8.6	No

Notes

[1] Existing off-ramp traffic volumes determined from manual turning movement counts conducted in November 2018.

[2] Off-ramp delay based on aggregate delay for all off-ramp lane groups based on analysis results using the HCM operational methodology for signalized intersections.

[3] Based on an assumed capacity of 850 cars per lane per hour, per the Agreement and the Amendment.

APPENDIX A

FREEWAY OFF-RAMP TERMINUS INTERSECTION TRAFFIC COUNT DATA SHEETS

Counts Unlimited
PO Box 1178
Corona, CA 92878
(951) 268-6268

City of Culver City
N/S: Jefferson Boulevard
E/W: I-405 Northbound Ramps
Weather: Clear

File Name : 03_CVC_Jefferson_405N AM
Site Code : 16618886
Start Date : 11/28/2018
Page No : 1

Groups Printed- Passenger Vehicles - Dual Wheeled - Buses

	Jefferson Boulevard Southbound				I-405 Northbound Off Ramp Westbound				Jefferson Boulevard Northbound				I-405 Northbound On Ramp Eastbound				
Start Time	Left	Thru	Right	App. Total	Left	Thru	Right	App. Total	Left	Thru	Right	App. Total	Left	Thru	Right	App. Total	Int. Total
07:00 AM	0	165	38	203	33	70	75	178	129	108	0	237	0	0	0	0	618
07:15 AM	0	159	30	189	40	64	68	172	165	125	0	290	0	0	0	0	651
07:30 AM	0	201	29	230	32	52	94	178	121	156	0	277	0	0	0	0	685
07:45 AM	0	208	33	241	50	65	121	236	143	178	0	321	0	0	0	0	798
Total	0	733	130	863	155	251	358	764	558	567	0	1125	0	0	0	0	2752
08:00 AM	0	213	37	250	51	62	101	214	134	200	0	334	0	0	0	0	798
08:15 AM	0	228	34	262	40	74	80	194	151	168	0	319	0	0	0	0	775
08:30 AM	0	233	32	265	54	64	86	204	111	179	0	290	0	0	0	0	759
08:45 AM	0	235	35	270	56	66	88	210	96	165	0	261	0	0	0	0	741
Total	0	909	138	1047	201	266	355	822	492	712	0	1204	0	0	0	0	3073
09:00 AM	0	262	31	293	51	64	72	187	109	166	0	275	0	0	0	0	755
09:15 AM	0	213	24	237	45	70	69	184	72	186	0	258	0	0	0	0	679
09:30 AM	0	201	27	228	49	52	60	161	92	138	0	230	0	0	0	0	619
09:45 AM	0	204	28	232	43	42	43	128	51	185	0	236	0	0	0	0	596
Total	0	880	110	990	188	228	244	660	324	675	0	999	0	0	0	0	2649
Grand Total	0	2522	378	2900	544	745	957	2246	1374	1954	0	3328	0	0	0	0	8474
Apprch %	0	87	13		24.2	33.2	42.6		41.3	58.7	0		0	0	0		
Total %	0	29.8	4.5	34.2	6.4	8.8	11.3	26.5	16.2	23.1	0	39.3	0	0	0	0	
Passenger Vehicles	0	2434	360	2794	524	730	932	2186	1327	1883	0	3210	0	0	0	0	8190
% Passenger Vehicles	0	96.5	95.2	96.3	96.3	98	97.4	97.3	96.6	96.4	0	96.5	0	0	0	0	96.6
Dual Wheeled	0	55	17	72	20	11	24	55	41	27	0	68	0	0	0	0	195
% Dual Wheeled	0	2.2	4.5	2.5	3.7	1.5	2.5	2.4	3	1.4	0	2	0	0	0	0	2.3
Buses	0	33	1	34	0	4	1	5	6	44	0	50	0	0	0	0	89
% Buses	0	1.3	0.3	1.2	0	0.5	0.1	0.2	0.4	2.3	0	1.5	0	0	0	0	1.1

	Jefferson Boulevard Southbound				I-405 Northbound Off Ramp Westbound				Jefferson Boulevard Northbound				I-405 Northbound On Ramp Eastbound				
Start Time	Left	Thru	Right	App. Total	Left	Thru	Right	App. Total	Left	Thru	Right	App. Total	Left	Thru	Right	App. Total	Int. Total
Peak Hour Analysis From 07:00 AM to 09:45 AM - Peak 1 of 1																	
Peak Hour for Entire Intersection Begins at 07:45 AM																	
07:45 AM	0	208	33	241	50	65	**121**	**236**	143	178	0	321	0	0	0	0	**798**
08:00 AM	0	213	**37**	250	51	62	101	214	134	**200**	0	**334**	0	0	0	0	798
08:15 AM	0	228	34	262	40	**74**	80	194	**151**	168	0	319	0	0	0	0	775
08:30 AM	0	**233**	32	**265**	**54**	64	86	204	111	179	0	290	0	0	0	0	759
Total Volume	0	882	136	1018	195	265	388	848	539	725	0	1264	0	0	0	0	3130
% App. Total	0	86.6	13.4		23	31.2	45.8		42.6	57.4	0		0	0	0		
PHF	.000	.946	.919	.960	.903	.895	.802	.898	.892	.906	.000	.946	.000	.000	.000	.000	.981

Counts Unlimited
PO Box 1178
Corona, CA 92878
(951) 268-6268

City of Culver City
N/S: Jefferson Boulevard
E/W: I-405 Northbound Ramps
Weather: Clear

File Name : 03_CVC_Jefferson_405N PM
Site Code : 16618886
Start Date : 11/28/2018

Groups Printed- Passenger Vehicles - Dual Wheeled - Buses

	Jefferson Boulevard Southbound				I-405 Northbound Off Ramp Westbound				Jefferson Boulevard Northbound				I-405 Northbound On Ramp Eastbound				
Start Time	Left	Thru	Right	App. Total	Left	Thru	Right	App. Total	Left	Thru	Right	App. Total	Left	Thru	Right	App. Total	Int. Total
03:00 PM	0	232	31	263	52	4	61	117	68	217	0	285	0	0	0	0	665
03:15 PM	0	244	33	277	56	2	66	124	90	193	0	283	0	0	0	0	684
03:30 PM	0	255	25	280	72	4	65	141	70	221	0	291	0	0	0	0	712
03:45 PM	0	254	21	275	92	0	81	173	69	233	0	302	0	0	0	0	750
Total	0	985	110	1095	272	10	273	555	297	864	0	1161	0	0	0	0	2811
04:00 PM	0	292	30	322	75	1	67	143	76	205	0	281	0	0	0	0	746
04:15 PM	0	289	36	325	93	1	78	172	79	199	0	278	0	0	0	0	775
04:30 PM	0	263	22	285	96	1	81	178	71	193	0	264	0	0	0	0	727
04:45 PM	0	238	21	259	111	0	103	214	87	209	0	296	0	0	0	0	769
Total	0	1082	109	1191	375	3	329	707	313	806	0	1119	0	0	0	0	3017
05:00 PM	0	292	23	315	95	1	102	198	70	215	0	285	0	0	0	0	798
05:15 PM	0	232	25	257	74	3	90	167	82	199	0	281	0	0	0	0	705
05:30 PM	0	261	20	281	98	1	112	211	75	211	0	286	0	0	0	0	778
05:45 PM	0	253	26	279	99	2	110	211	69	176	0	245	0	0	0	0	735
Total	0	1038	94	1132	366	7	414	787	296	801	0	1097	0	0	0	0	3016
Grand Total	0	3105	313	3418	1013	20	1016	2049	906	2471	0	3377	0	0	0	0	8844
Apprch %	0	90.8	9.2		49.4	1	49.6		26.8	73.2	0		0	0	0		
Total %	0	35.1	3.5	38.6	11.5	0.2	11.5	23.2	10.2	27.9	0	38.2	0	0	0	0	
Passenger Vehicles	0	3028	305	3333	1000	20	1009	2029	885	2403	0	3288	0	0	0	0	8650
% Passenger Vehicles	0	97.5	97.4	97.5	98.7	100	99.3	99	97.7	97.2	0	97.4	0	0	0	0	97.8
Dual Wheeled	0	48	7	55	12	0	6	18	18	26	0	44	0	0	0	0	117
% Dual Wheeled	0	1.5	2.2	1.6	1.2	0	0.6	0.9	2	1.1	0	1.3	0	0	0	0	1.3
Buses	0	29	1	30	1	0	1	2	3	42	0	45	0	0	0	0	77
% Buses	0	0.9	0.3	0.9	0.1	0	0.1	0.1	0.3	1.7	0	1.3	0	0	0	0	0.9

	Jefferson Boulevard Southbound				I-405 Northbound Off Ramp Westbound				Jefferson Boulevard Northbound				I-405 Northbound On Ramp Eastbound				
Start Time	Left	Thru	Right	App. Total	Left	Thru	Right	App. Total	Left	Thru	Right	App. Total	Left	Thru	Right	App. Total	Int. Total
Peak Hour Analysis From 03:00 PM to 05:45 PM - Peak 1 of 1																	
Peak Hour for Entire Intersection Begins at 04:15 PM																	
04:15 PM	0	289	**36**	**325**	93	**1**	78	172	79	199	0	278	0	0	0	0	775
04:30 PM	0	263	22	285	96	1	81	178	71	193	0	264	0	0	0	0	727
04:45 PM	0	238	21	259	**111**	0	**103**	**214**	**87**	209	0	**296**	0	0	0	0	769
05:00 PM	0	**292**	23	315	95	1	102	198	70	**215**	0	285	0	0	0	0	**798**
Total Volume	0	1082	102	1184	395	3	364	762	307	816	0	1123	0	0	0	0	3069
% App. Total	0	91.4	8.6		51.8	0.4	47.8		27.3	72.7	0		0	0	0		
PHF	.000	.926	.708	.911	.890	.750	.883	.890	.882	.949	.000	.948	.000	.000	.000	.000	.961

APPENDIX B

FREEWAY OFF-RAMP TERMINUS INTERSECTION HCM OPERATIONAL METHODOLOGY WORKSHEET

CALTRANS FREEWAY OFF-RAMP IMPACT ANALYSIS SCREENING - HOTEL JEFFERSON PROJECT
Existing Conditions
AM Peak Hour

Level Of Service Computation Report
2000 HCM Operations Method (Base Volume Alternative)

Intersection #1 I-405 Freeway NB Ramps and Jefferson Boulevard

Cycle (sec):	90	Critical Vol./Cap.(X):	0.833
Loss Time (sec):	0	Average Delay (sec/veh):	28.9
Optimal Cycle:	111	Level Of Service:	C

Street Name:	I-405 Freeway NB Ramps						Jefferson Boulevard					
Approach:	North Bound			South Bound			East Bound			West Bound		
Movement:	L	T	R	L	T	R	L	T	R	L	T	R
Control:	Split Phase			Split Phase			Protected			Permitted		
Rights:	Include			Include			Include			Include		
Min. Green:	5	5	5	0	0	0	5	10	0	0	10	10
Y+R:	5.7	5.7	5.7	0.0	0.0	0.0	4.0	4.7	0.0	0.0	4.7	4.7
Lanes:	1 0	1! 0	0	0 0	0 0	0	2 0	2 0	0	0 0	2 1	1
Volume Module:												
Base Vol:	195	265	388	0	0	0	539	725	0	0	882	136
Growth Adj:	1.00	1.00	1.00	1.00	1.00	1.00	1.00	1.00	1.00	1.00	1.00	1.00
Initial Bse:	195	265	388	0	0	0	539	725	0	0	882	136
User Adj:	1.00	1.00	1.00	1.00	1.00	1.00	1.00	1.00	1.00	1.00	1.00	1.00
PHF Adj:	0.90	0.90	0.90	1.00	1.00	1.00	0.95	0.95	0.95	0.96	0.96	0.96
PHF Volume:	217	295	432	0	0	0	570	766	0	0	919	142
Reduct Vol:	0	0	0	0	0	0	0	0	0	0	0	0
Reduced Vol:	217	295	432	0	0	0	570	766	0	0	919	142
PCE Adj:	1.00	1.00	1.00	1.00	1.00	1.00	1.00	1.00	1.00	1.00	1.00	1.00
MLF Adj:	1.00	1.00	1.00	1.00	1.00	1.00	1.00	1.00	1.00	1.00	1.00	1.00
FinalVolume:	217	295	432	0	0	0	570	766	0	0	919	142
Saturation Flow Module:												
Sat/Lane:	1900	1900	1900	1900	1900	1900	1900	1900	1900	1900	1900	1900
Adjustment:	0.90	0.90	0.90	1.00	1.00	1.00	0.92	0.95	1.00	1.00	0.89	0.89
Lanes:	1.13	0.35	0.52	0.00	0.00	0.00	2.00	2.00	0.00	0.00	3.00	1.00
Final Sat.:	1931	603	883	0	0	0	3502	3610	0	0	5083	1694
Capacity Analysis Module:												
Vol/Sat:	0.11	0.49	0.49	0.00	0.00	0.00	0.16	0.21	0.00	0.00	0.18	0.08
Crit Moves:			****				****				****	
Green/Cycle:	0.59	0.59	0.59	0.00	0.00	0.00	0.20	0.41	0.00	0.00	0.22	0.22
Volume/Cap:	0.19	0.83	0.83	0.00	0.00	0.00	0.83	0.51	0.00	0.00	0.83	0.39
Delay/Veh:	8.6	20.4	20.4	0.0	0.0	0.0	43.4	20.0	0.0	0.0	38.5	30.2
User DelAdj:	1.00	1.00	1.00	1.00	1.00	1.00	1.00	1.00	1.00	1.00	1.00	1.00
AdjDel/Veh:	8.6	20.4	20.4	0.0	0.0	0.0	43.4	20.0	0.0	0.0	38.5	30.2
LOS by Move:	A	C	C	A	A	A	D	C	A	A	D	C
HCM2kAvgQ:	2	21	21	0	0	0	10	9	0	0	12	4

Note: Queue reported is the number of cars per lane.

Traffix 8.0.0715 (c) 2008 Dowling Assoc. Licensed to CRAIN & ASSOC., L.A.

CALTRANS FREEWAY OFF-RAMP IMPACT ANALYSIS SCREENING - HOTEL JEFFERSON PROJECT
Existing Conditions
PM Peak Hour

Level Of Service Computation Report
2000 HCM Operations Method (Base Volume Alternative)

Intersection #1 I-405 Freeway NB Ramps and Jefferson Boulevard

Cycle (sec):	90	Critical Vol./Cap.(X):	0.715
Loss Time (sec):	0	Average Delay (sec/veh):	23.2
Optimal Cycle:	65	Level Of Service:	C

Street Name:	I-405 Freeway NB Ramps						Jefferson Boulevard					
Approach:	North Bound			South Bound			East Bound			West Bound		
Movement:	L	T	R	L	T	R	L	T	R	L	T	R
Control:	Split Phase			Split Phase			Protected			Permitted		
Rights:	Include			Include			Include			Include		
Min. Green:	5	5	5	0	0	0	5	10	0	0	10	10
Y+R:	5.7	5.7	5.7	0.0	0.0	0.0	4.0	4.7	0.0	0.0	4.7	4.7
Lanes:	1	0 1!	0	0	0	0	2	0 2	0	0	2	1 1
Volume Module:												
Base Vol:	395	3	364	0	0	0	307	816	0	0	1082	102
Growth Adj:	1.00	1.00	1.00	1.00	1.00	1.00	1.00	1.00	1.00	1.00	1.00	1.00
Initial Bse:	395	3	364	0	0	0	307	816	0	0	1082	102
User Adj:	1.00	1.00	1.00	1.00	1.00	1.00	1.00	1.00	1.00	1.00	1.00	1.00
PHF Adj:	0.89	0.89	0.89	1.00	1.00	1.00	0.95	0.95	0.95	0.91	0.91	0.91
PHF Volume:	444	3	409	0	0	0	324	861	0	0	1188	112
Reduct Vol:	0	0	0	0	0	0	0	0	0	0	0	0
Reduced Vol:	444	3	409	0	0	0	324	861	0	0	1188	112
PCE Adj:	1.00	1.00	1.00	1.00	1.00	1.00	1.00	1.00	1.00	1.00	1.00	1.00
MLF Adj:	1.00	1.00	1.00	1.00	1.00	1.00	1.00	1.00	1.00	1.00	1.00	1.00
FinalVolume:	444	3	409	0	0	0	324	861	0	0	1188	112
Saturation Flow Module:												
Sat/Lane:	1900	1900	1900	1900	1900	1900	1900	1900	1900	1900	1900	1900
Adjustment:	0.86	0.86	0.86	1.00	1.00	1.00	0.92	0.95	1.00	1.00	0.90	0.90
Lanes:	1.35	0.01	0.64	0.00	0.00	0.00	2.00	2.00	0.00	0.00	3.00	1.00
Final Sat.:	2194	9	1048	0	0	0	3502	3610	0	0	5120	1707
Capacity Analysis Module:												
Vol/Sat:	0.20	0.39	0.39	0.00	0.00	0.00	0.09	0.24	0.00	0.00	0.23	0.07
Crit Moves:		****					****				****	
Green/Cycle:	0.55	0.55	0.55	0.00	0.00	0.00	0.13	0.45	0.00	0.00	0.32	0.32
Volume/Cap:	0.37	0.71	0.71	0.00	0.00	0.00	0.71	0.53	0.00	0.00	0.71	0.20
Delay/Veh:	11.7	17.3	17.3	0.0	0.0	0.0	42.9	17.9	0.0	0.0	28.1	22.0
User DelAdj:	1.00	1.00	1.00	1.00	1.00	1.00	1.00	1.00	1.00	1.00	1.00	1.00
AdjDel/Veh:	11.7	17.3	17.3	0.0	0.0	0.0	42.9	17.9	0.0	0.0	28.1	22.0
LOS by Move:	B	B	B	A	A	A	D	B	A	A	C	C
HCM2kAvgQ:	5	14	14	0	0	0	6	9	0	0	12	2

Note: Queue reported is the number of cars per lane.

Traffix 8.0.0715 (c) 2008 Dowling Assoc. Licensed to CRAIN & ASSOC., L.A.

ATTACHMENT 8

NET PROJECT TRAFFIC VOLUMES
AM PEAK HOUR

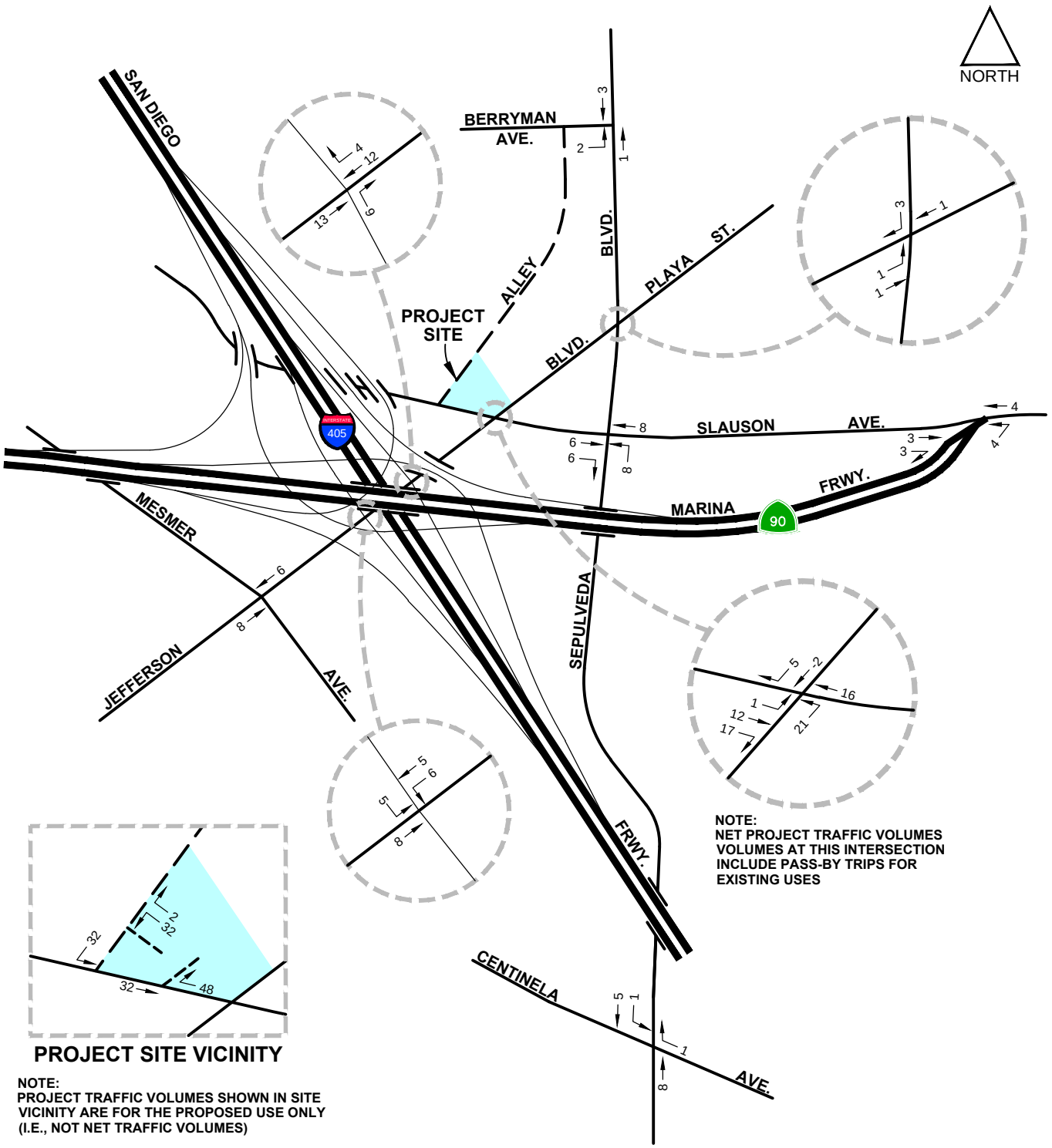

ATTACHMENT 8

3/12/2019

FN: JEFFERSON HOTEL CULVER\AMNETVOLS

NET PROJECT TRAFFIC VOLUMES
AM PEAK HOUR

CRAIN & ASSOCIATES
Transportation Planning
Traffic Engineering
300 Corporate Pointe, Suite 470
Culver City, California 90230
PH (310) 473 6508 F (310) 444 9771
www.crainandassociates.com

ATTACHMENT 9

NET PROJECT TRAFFIC VOLUMES
PM PEAK HOUR

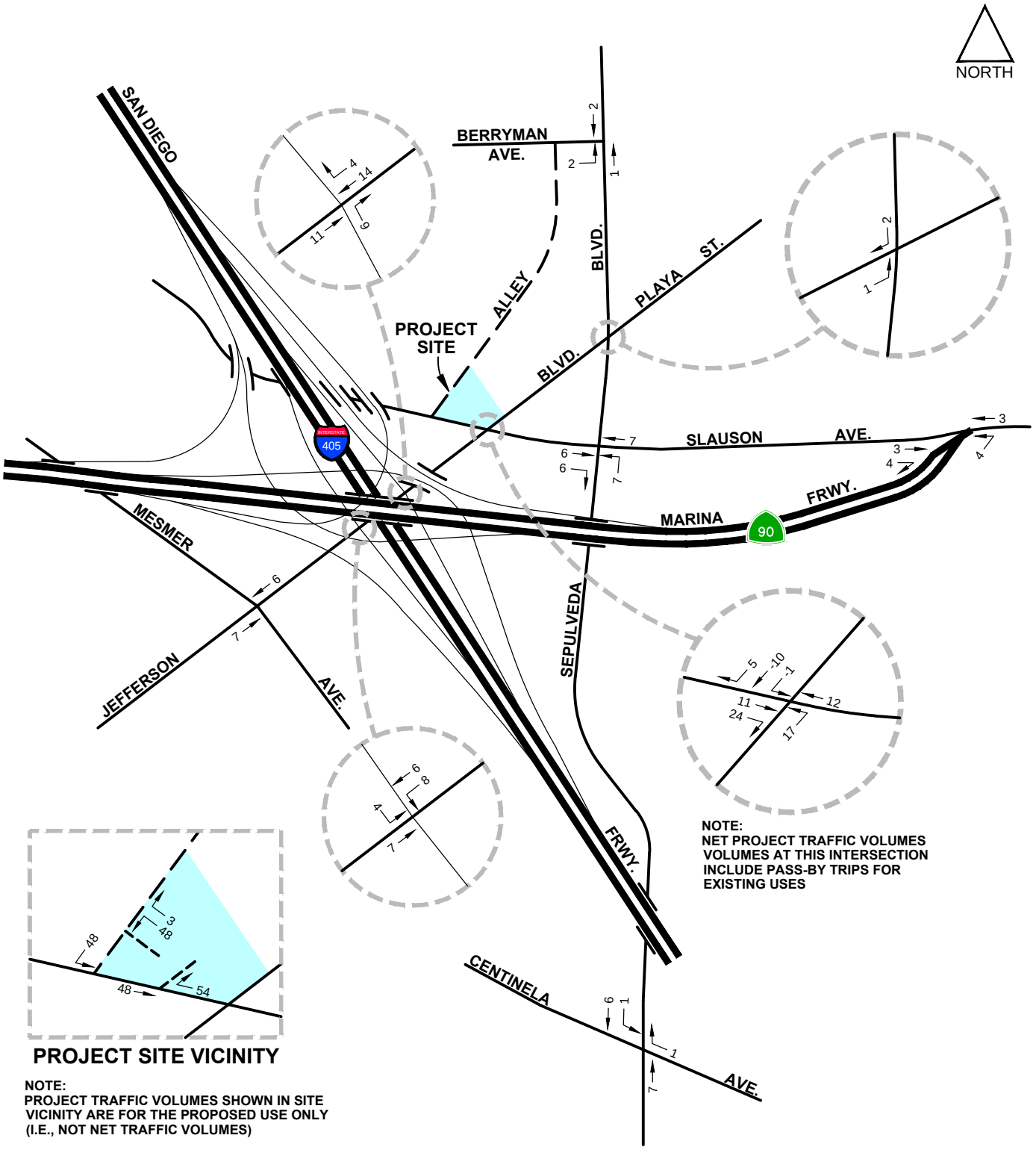

PROJECT SITE VICINITY

NOTE:
PROJECT TRAFFIC VOLUMES SHOWN IN SITE VICINITY ARE FOR THE PROPOSED USE ONLY (I.E., NOT NET TRAFFIC VOLUMES)

ATTACHMENT 9

3/12/2019

FN: JEFFERSON HOTEL CULVER CITY\GRAPHICS\PMNETVOLS

NET PROJECT TRAFFIC VOLUMES
PM PEAK HOUR

CRAIN & ASSOCIATES
Transportation Planning
Traffic Engineering
300 Corporate Pointe, Suite 470
Culver City, California 90230
PH (310) 473 6508 F (310) 444 9771
www.crainandassociates.com

ATTACHMENT 10

ADDITIONAL TRAFFIC STUDY ITEMS PER CITY OF CULVER CITY DRAFT TRAFFIC STUDY MOU COMMENT EMAIL

Per the request of City of Culver City staff, the following will also be included in the Jefferson Hotel Project Traffic Study:

1. Crain & Associates will prepare a conceptual striping plan for Slauson Avenue, adjacent to the project site, displaying at a minimum the dimensions of the turn-out lane for the entrance driveway, travel lanes on Slauson Avenue, and site-adjacent sidewalks on Slauson Avenue and Jefferson Boulevard. We will ensure that site-adjacent sidewalk maintains a minimum width of 10 feet with the turn-out lane.
2. We will conduct a queuing analysis for eastbound Jefferson Boulevard left-turns at Slauson Avenue in order to determine if there are spillover impacts to eastbound Jefferson Boulevard through movements under With Project conditions.
3. We will conduct a queuing analysis of inbound project traffic in order to determine if there would be spillover impacts to westbound Slauson Avenue through movements under With Project conditions.
4. We will determine how many future metered parking spaces would be lost on Slauson Avenue due to the project's planned access configuration. We will research parking meter revenue for this area of the City in order to determine the potential loss in meter revenue.
5. The Mitigation Measures section of the Traffic Study will include voluntary measures to address neighborhood traffic intrusion impacts.
6. The Traffic Study will include a section on bicycle travel, including the City's Bicycle and Pedestrian Master Plan and planned bicycle facilities in the vicinity of the project.
7. The Mitigation Measures section of the Traffic Study will include transportation demand management (TDM) measures promoting alternative travel mode usage in order to reduce the project's vehicular traffic.

APPENDIX E

PROJECT DEMAND PARKING ANALYSIS

CRAIN & ASSOCIATES
Transportation Planning / Traffic Engineering

EMAIL TRANSMITTED

April 3, 2020

Michael Allen
Current Planning Manager
City of Culver City, Planning Division
9770 Culver Boulevard
Culver City, CA 90232

RE: The Jeff Hotel, 11469 Jefferson Boulevard
Parking Demand Analysis

Dear Mr. Allen,

Crain & Associates has been retained to perform a parking demand analysis for The Jeff Hotel project (the "Project"), proposed for development at 11469 Jefferson Boulevard and consisting of a new five-story, 175-room boutique hotel geared toward the business traveler with ground-floor commercial space and a two-level, subterranean parking garage. The Project will provide a series of amenities including a restaurant, meeting rooms, lounge, fitness room, pool, and rooftop bar. This parking demand analysis evaluates the peak parking demands anticipated for the Project per the scope of work agreed to by City staff on September 19, 2019 and amended on February 21, 2020. The purpose of this analysis is to determine the adequacy of the Project's parking supply.

As shown in Attachment A, Conceptual Project Site Plan, dual entry lanes will be provided from westbound Slauson Avenue. The drive aisle closer to the hotel will serve as a passenger drop-off and pick-up area. The second drive aisle will allow entering vehicles to access the parking ramp down to the P-1 and P-2 parking levels. The Project site will accommodate 138 parking spaces on the two subterranean parking levels. The parking spaces will be provided through a combination of tandem, standard, and ADA spaces. The Project site will include valet-assist parking in order to maintain safe and efficient use of the tandem spaces.

300 Corporate Pointe
Suite 470
Culver City, CA 90230
310 473 6508 (main)
310 444 9771 (fax)

www.crainandassociates.com

There will be two Project driveway exits onto the adjacent alley to access the surrounding roadway system. Exiting vehicles will be allowed to travel northbound or southbound along the alley toward Berryman Avenue or Slauson Avenue, respectively. One exit driveway will be provided directly off of the dual drive aisles (which merge on approach to the alley), while the second exit will provide egress for vehicles exiting the subterranean parking garage.

The first step in evaluating the Project's parking demands was to prepare a shared parking analysis, based on the separate land-use components comprising the proposed Project. This shared parking analysis has been prepared in accordance with the Alternative Parking Provisions of the City of Culver City Municipal Code ("CCMC"), which include a shared parking option for developments with multiple non-residential land uses. The shared parking analysis evaluates the future peak parking demands of the overall Project, based on combined demands of the distinct hotel components generating parking demands per City requirements.

Per the CCMC, the Project land-use components for which adequate parking must be provided are the hotel's 175 rooms, 3,400 square-foot restaurant (including 500 square feet of outdoor dining area), 7,000 square-foot lounge, 5,100 square-foot rooftop bar, and 4,800 square feet of meeting room space. All of the abovementioned floor areas are gross floor areas, as required by the CCMC. The CCMC requires a parking supply for each of these distinct Project components. However, all of these land uses will be located within the same facility, operating as a cohesive development and sharing the same parking supply and valet-assist services. Therefore, the shared parking analysis integrates all parking demand-generating components of the Project to determine how the temporal parking variations of the land-use components complement one another. The Project components and sizes are summarized in Table 1.

Table 1
The Jeff Hotel Project
Proposed Land Use Description

Description/Land Use[1]	Size[2]
Hotel	175 rm
Hotel Restaurant	3,400 sf
Hotel Lounge	7,000 sf
Hotel Rooftop Bar	5,100 sf
Hotel Meeting Rooms	4,800 sf

Notes
[1] Land use components with parking requirements.
[2] rm = Rooms; sf = Square Feet of Gross Floor Area.

Shared Parking Analysis Methodology

The shared parking analysis follows the general format and methodologies scoped with City staff. The shared parking demands of the Project have been evaluated utilizing multiple parking demand sources in order to provide a more robust analysis framework.

The first step in developing the shared parking profiles for the proposed Project was to estimate the peak parking demand for each hotel land-use component as a series of stand-alone uses. This step was accomplished through the use of appropriate off-street parking requirement ratios contained in the CCMC and recommended base parking ratios from the Urban Land Institute (ULI) *Shared Parking* (2nd Edition, 2005) manual. The CCMC and ULI parking ratios utilized as the bases for this analysis are listed in Tables 2 and 3, respectively.

Table 2
City of Culver City Municipal Code Parking Ratios

Land Use	Ratio
Hotel (Guest Rooms)	1 space per rm
plus	1 space per 20 rm
Hotel Restaurant Uses (including Lounge and Bar)	1 space per 100 sf
Hotel Meeting /Conference Space	1 space per 100 sf

Notes
rm = Room; sf = Square Feet of Gross Floor Area.

Table 3
Urban Land Institute (ULI) Recommended Base Parking Ratios[1]

	Weekday		Weekend		
Land Use	Visitor	Employee	Visitor	Employee	Unit
Hotel-Business[2]	1.000	0.250	0.900	0.180	per rm
Hotel Conf. Center/Banquet (20 to 50 sf/rm)	30.000	--	30.000	--	per ksf
Hotel Restaurant/Lounge	10.000	--	10.000	--	per ksf

Notes
[1] Urban Land Institute (ULI) *Shared Parking* (2nd Edition, 2005).
[2] The two hotel-type options for room-based parking demands in the ULI *Shared Parking* manual are leisure (resort) and business. Per its amenities, the Project would be classified a business hotel.
rm = Guest rooms; ksf = Thousand square feet of gross floor area.

As shown in Table 4, the maximum parking demand for each Project land-use component was then calculated using the appropriate CCMC parking ratios. Based on the stand-alone requirements of the individual land uses (and conservatively assuming that all Project users would access/egress the site via passenger vehicles), the Project would require a total of 387 parking spaces.

As shown in Table 5, the maximum parking demand for each land-use component of the Project was also calculated using the appropriate ULI parking ratios. Based on the stand-alone requirements of the individual land uses, the Project would require a total of 518 parking spaces on weekdays and 488 parking spaces on weekends.

These stand-alone requirements do not account for the anticipated travel mode split of Project users. The Project site is currently served by Culver CityBus and Los Angeles County Metropolitan Transportation Authority ("Metro") bus lines, with most rendezvousing at the Culver City Transit Center located less than 1,000 feet east of the Project site. Bus lines within a reasonable walking distance (approximately one-quarter mile) of the Project site include Culver CityBus Lines 2, 3, 4, 6, and Rapid 6, and Metro Lines 108/358, 110, and 217. It is, therefore, reasonable to assume that a percentage of Project travel will be made via public transportation. However, as a conservative measure, no adjustments have been made to account for the expected transit usage by Project employees, guests, and visitors.

Therefore, the unadjusted stand-alone maximum parking demands for the individual Project uses were used to develop shared parking profiles based on the methodology and demand variation pattern data provided in the ULI *Shared Parking* manual. The procedures in the manual account for parking demand fluctuations based on month of the year, time-of-day, weekday versus weekend, and customer/visitor versus employee. The detailed calculation worksheets are included in Attachment B.

Shared Parking Analysis Results

Summaries of the results following the ULI *Shared Parking* analysis for the Project's hotel component land uses, based on CCMC and ULI parking rates, are contained in Tables 6 and 7, respectively. As shown, the maximum shared demand for the Project would be approximately 299 parking spaces per the CCMC rates and 401 spaces per the ULI rates. The CCMC peak demands would occur around midday on a typical weekday in the month of July, while the ULI peak demands are forecast at 9:00 PM on a typical weekday in the month of July.

Table 4

The Jeff Hotel Project
Shared Parking Analysis Maximum Parking Demand Levels
Based on City of Culver City Municipal Code Stand-Alone Parking Requirements

Description/Land Use	Size	Parking Ratio	Stand-Alone Spaces
Hotel			
Guest rooms	175 rm	1 / 1 rm	175
plus	175 rm	1 / 20 rm	9
Hotel Restaurant/Lounge/Bar	15,500 sf	1 / 100 sf	155
Hotel Meeting/Conference Space	4,800 sf	1 / 100 sf	48
PROJECT TOTAL:			387

Notes
rm = Room; sf = Square Feet of Gross Floor Area.

Table 5

The Jeff Hotel Project
Shared Parking Analysis Maximum Parking Demand Levels
Based on ULI *Shared Parking* Recommended Parking Ratios

		Weekday		Weekend	
Description/Land Use	Size	Parking Ratio	Stand-Alone Spaces	Parking Ratio	Stand-Alone Spaces
Hotel guest rooms	175 rm	1.250 / 1 rm	219	1.080 / 1 rm	189
Hotel meeting/ballroom	4,800 sf	30.000 / 1 ksf	144	30.000 / 1 ksf	144
Hotel restaurant/lounge/bar	15,500 sf	10.000 / 1 ksf	155	10.000 / 1 ksf	155
PROJECT TOTAL:			518		488

Notes
rm = Guest rooms; ksf = Thousand square feet of gross floor area.

Attachments C and D show the hourly demand profiles by Project hotel component for the peak weekday and weekend, respectively, per the CCMC ratios. The ULI-based profiles are depicted in Attachments E and F.

Table 6

The Jeff Hotel Project
Shared Parking Analysis Results Summary
(Using City of Culver City Municipal Code Parking Ratios)

Month	Maximum Shared Parking Demand		
	Weekday	Weekend	Overall
January	258	241	258
February	270	252	270
March	289	271	289
April	284	265	284
May	291	273	291
June	296	277	296
July	299	281	299
August	295	277	295
September	284	266	284
October	292	274	292
November	277	260	277
December	277	261	277
Late Dec.	256	240	256
Maximum	299	281	299

Table 7

The Jeff Hotel Project
Shared Parking Analysis Results Summary
(Using ULI *Shared Parking* Recommended Parking Ratios)

Month	Maximum Shared Parking Demand		
	Weekday	Weekend	Overall
January	346	345	346
February	369	365	369
March	386	382	386
April	383	379	383
May	390	385	390
June	400	394	400
July	401	396	401
August	393	388	393
September	386	381	386
October	392	387	392
November	370	367	370
December	357	356	357
Late Dec.	333	328	333
Maximum	401	396	401

Based on both the CCMC- and ULI-based analyses, the Project's peak parking demands would require between 1.5 and 2.5 parking spaces per guest room. In speaking with potential Project hotel and valet operators, this range of parking space utilization is not supported by their recent hotel parking experience. With the rise in hotel customer travel via transportation network companies (e.g., Uber and Lyft), the operators have seen effects on parking utilization. A review of hotel parking occupancy data collected recently for the nearby DoubleTree by Hilton Hotel (at 6161 Centinela Avenue) indicated peak parking demands markedly below one occupied parking space per guest room. In order to better understand the current parking tendencies of hotels in the Project vicinity and per the scope recommended by City staff, parking utilization studies were performed at two additional proximate hotels. Data for the three local hotels were then used to develop empirical peak parking demand ratios applicable to the Project.

Hotel Empirical Parking Utilization Study Methodology & Results

As described above, three hotels in the general vicinity of the Project were selected for inclusion in the empirical parking utilization study. The hotels share characteristics with each other and the Project. The DoubleTree by Hilton Hotel (the "DoubleTree"), the Courtyard by Marriott Hotel (the "Courtyard") at 6333 Bristol Parkway, and the Four Points by Sheraton (the "Four Points") at 5990 Green Valley Circle would all be characterized as business hotels versus resort hotels in the City of Culver City. They all are located in the same general vicinity, with convenient freeway access. All locations have restaurant space and meeting room space, as outlined in Table 8, and provide pools and fitness rooms as amenities. As such, they were considered appropriate for inclusion in the Project's empirical parking demand analysis.

Table 8
Empirical Parking Utilization Study
Surveyed Hotel Land Use Descriptions

Description/Land Use	DoubleTree Components	Courtyard Components	Four Points Components
Hotel	375 rm	260 rm	196 rm
Hotel Meeting/Ballroom	15,969 sf	10,437 sf	2,942 sf
Hotel Ancillary Restaurant	2,000 sf	Not Available[1]	Not Available[1]

Notes

rm = Guest rooms; sf = Square feet of gross floor area.

[1] Exact floor area not available, as the ground-floor restaurant and lobby space are intermingled.

Per a previous City-approved parking demand analysis, empirical parking utilization studies were performed at the DoubleTree's three parking areas on an hourly basis, during the following time periods:

- 7:00 AM to 7:00 PM, from Tuesday, June 5, 2018, through Monday, June 18, 2018; and
- 6:00 AM to 12:00 AM, from Monday, July 16, 2018, through Monday, July 30, 2018.

In addition, as determined in coordination with City staff, empirical parking utilization studies were conducted at the Courtyard and Four Points locations, with occupancy levels of their parking fields recorded on an hourly basis, during the following time period:

- 12:00 AM on Monday, September 16, 2019, to 11:00 PM on Sunday, September 22, 2019.

Per the ULI *Shared Parking* manual, June represents peak-month parking demand conditions, July represents nearest-to-peak month (98 percent) conditions, and September represents 93 percent-of-peak conditions for hotels such as the Project. The Project's conference center/meeting space experiences evenly distributed parking demands throughout the year and therefore all months represent peak conditions. Further, while hotel restaurants/lounges exhibit peak parking demands in the month of December, they also experience an average of 95-percent-of-peak conditions during the three survey months. Per ULI guidance, the observed July and September parking demands were factored upward to represent peak month conditions (via factors of 1.00/0.98 and 1.00/0.93, respectively) as part of this analysis.

The weekday parking demand data for the surveyed hotels were converted to peak-month conditions based on the abovementioned parameters and are summarized in Attachment G. As shown in Attachment G, the maximum weekday parking demands for the DoubleTree, Courtyard, and Four Points locations were shown to be 296, 139, and 92 occupied parking spaces, respectively. The maximum weekend parking demands for these three locations were 281, 129, and 78 occupied parking spaces, respectively.

The peak-month hotel parking demands were then utilized with the appropriate number of hotel guest rooms to develop empirical parking demand ratios by hour for the surveyed hotels. These parking demand ratios are summarized in Attachment H for the three surveyed local hotels. As shown in Attachment H, the peak parking demand ratios for all three surveyed hotels were higher on weekdays than on weekends. The DoubleTree's parking demand ratios -- based on number of guest rooms -- were shown to be generally greater on weekdays and weekends than the parking demand ratios determined for the Courtyard and Four Points

locations. The overall DoubleTree peak hourly parking demand ratio occurred at 12:00 PM on a weekday and was shown to be approximately 0.789 parking spaces per guest room. Thus, the DoubleTree parking demand ratios were conservatively used to develop the future parking demands of the Project.

Based on the conservative DoubleTree parking demand ratios, the Project's peak-month weekday and weekend parking demands were calculated and the results are summarized in Attachment I. As shown in Attachment I, the maximum parking demand of the Project was determined to be approximately 138 occupied parking spaces, which would be experienced at 12:00 PM on a weekday.

Peak Hotel Parking Demands per the ITE *Parking Generation Manual*

Per City request, the anticipated peak parking demands of hotels were also assessed based on the guidance and data provided in the recently updated Institute of Transportation Engineers (ITE) *Parking Generation Manual* (5th Edition, 2019). The ITE manual provides average weekday peak period parking rates for both standard Hotels (Land Use Code [LUC] 310) and Business Hotels (LUC 312) located in a General Urban/Suburban setting, based on fairly robust datasets (11 to 22 study sites, with number of rooms as the independent variable). The average Saturday peak period parking rates for these land uses are based on small sample sizes (1 to 3 study sites), so the manual cautions against the use of those data. However, given that the empirical parking study showed higher parking demands on weekdays versus weekends for all three local survey sites, it would appear that the weekday parking demands are more critical for hotels such as the Project.

The ITE *Parking Generation Manual* defines a standard hotel (LUC 310) as "a place of lodging that provides sleeping accommodations and supporting facilities such as a full-service restaurant, cocktail lounge, meeting rooms, banquet room, and convention facilities. It typically provides a swimming pool or another recreational facility such as a fitness room." Per the manual, a standard hotel has an average weekday peak period parking demand rate of 0.74 occupied spaces per room. A business hotel (LUC 310) is defined as "a place of lodging aimed toward the business traveler but also accommodates a growing number of recreational travelers. These hotels provide sleeping accommodations and other limited facilities, such as a breakfast buffet bar and afternoon beverage bar. Some provide a full-service restaurant geared toward hotel guests. Some provide a swimming pool; most provide fitness facilities. Limited space for meeting facilities is provided." The average weekday peak period parking demand rate for business hotels is 0.72 occupied spaces per room.

Both of these ITE peak parking demand rates are in line with the rate of 0.789 occupied spaces per room determined from the empirical parking utilization study for the Project, which is similar in design to both LUC 310 and 312 hotel types. In addition, ITE provides advice that "[t]he wide array of data in the manual blends many site conditions and may not best reflect a particular local condition. Therefore, a survey of a site in a comparable local condition should always be considered as one potential means to estimate parking demand." These factors further reinforce that the empirically derived rate is appropriate for the Project parking analysis.

Project Parking Supply & Parking Demand Analysis Conclusions

As outlined in the preceding analysis, it was determined that the overall Project peak parking demands can be accommodated within the proposed overall Project parking supply. The empirical parking utilization studies for the Project revealed an estimated overall peak parking demand of 138 parking spaces, which matches the Project's proposed parking supply of 138 spaces. These results are considered conservative given that the surveyed hotel locations, while similar to each other and the Project, averaged over 35 square feet of meeting room space per guest room while the Project will average less than 28 square feet of meeting room space per guest room. The DoubleTree, the peak parking demands of which were used to develop the Project's maximum parking demand, maintains over 42 square feet of meeting room space per guest room. The Project's parking supply would, therefore, accommodate the maximum parking demands of the Project on weekdays and weekends, and no off-site Project parking impacts are expected.

Please contact me if you have any questions.

Sincerely,



Ryan J. Kelly, T.E.
Senior Transportation Engineer
TR 2547

RK
C22403R3

ATTACHMENT A

CONCEPTUAL PROJECT SITE PLAN

NORTH



ATTACHMENT A

3/30/2020

FN: JEFFERSON HOTEL CULVER\SITE PLAN_20191014

THE JEFF HOTEL
CONCEPTUAL PROJECT SITE PLAN

CRAIN & ASSOCIATES
Transportation Planning
Traffic Engineering
300 Corporate Pointe, Suite 470
Culver City, California 90230
PH (310) 473 6508 F (310) 444 9771
www.crainandassociates.com

ATTACHMENT B

SHARED PARKING CALCULATION WORKSHEETS

PROJECT SHARED PARKING CALCULATION WORKSHEETS
(USING CITY OF CULVER CITY MUNICIPAL CODE PARKING RATIOS)

The Jeff Hotel Project
Weekday Parking Demand

TIME OF DAY	HOTEL GUEST	HOTEL EMPLOYEE	MEETING ROOM CUSTOMER	RESTAURANT CUSTOMER	**TOTAL PARKING DEMAND**
JANUARY WEEKDAY "TOTAL SITE" PARKING ACCUMULATIONS					
6:00 AM	100	2	0	0	**102**
7:00 AM	95	11	0	13	**119**
8:00 AM	84	33	14	40	**171**
9:00 AM	74	33	29	13	**149**
10:00 AM	63	37	29	13	**142**
11:00 AM	63	37	29	7	**136**
Noon	58	37	31	132	**258** *
1:00 PM	58	37	31	132	**258** *
2:00 PM	63	37	31	44	**175**
3:00 PM	63	37	31	13	**144**
4:00 PM	68	33	31	13	**145**
5:00 PM	74	26	48	40	**188**
6:00 PM	79	15	48	73	**215**
7:00 PM	79	7	48	79	**213**
8:00 PM	84	7	48	92	**231**
9:00 PM	89	7	48	88	**232**
10:00 PM	100	7	24	79	**210**
11:00 PM	105	4	0	53	**162**
Midnight	105	2	0	40	**147**
Maximum	105	37	48	132	**258**
FEBRUARY WEEKDAY "TOTAL SITE" PARKING ACCUMULATIONS					
6:00 AM	119	2	0	0	**121**
7:00 AM	113	11	0	13	**137**
8:00 AM	100	33	14	40	**187**
9:00 AM	88	33	29	13	**163**
10:00 AM	75	37	29	13	**154**
11:00 AM	75	37	29	7	**148**
Noon	69	37	31	133	**270** *
1:00 PM	69	37	31	133	**270** *
2:00 PM	75	37	31	44	**187**
3:00 PM	75	37	31	13	**156**
4:00 PM	81	33	31	13	**158**
5:00 PM	88	26	48	40	**202**
6:00 PM	94	15	48	73	**230**
7:00 PM	94	7	48	80	**229**
8:00 PM	100	7	48	93	**248**
9:00 PM	106	7	48	89	**250**
10:00 PM	119	7	24	80	**230**
11:00 PM	125	4	0	53	**182**
Midnight	125	2	0	40	**167**
Maximum	125	37	48	133	**270**
MARCH WEEKDAY "TOTAL SITE" PARKING ACCUMULATIONS					
6:00 AM	127	2	0	0	**129**
7:00 AM	121	11	0	15	**147**
8:00 AM	107	33	14	44	**198**
9:00 AM	94	33	29	15	**171**
10:00 AM	80	37	29	15	**161**
11:00 AM	80	37	29	7	**153**
Noon	74	37	31	147	**289** *
1:00 PM	74	37	31	147	**289** *
2:00 PM	80	37	31	49	**197**
3:00 PM	80	37	31	15	**163**
4:00 PM	87	33	31	15	**166**
5:00 PM	94	26	48	44	**212**
6:00 PM	101	15	48	81	**245**
7:00 PM	101	7	48	88	**244**
8:00 PM	107	7	48	103	**265**
9:00 PM	114	7	48	98	**267**
10:00 PM	127	7	24	88	**246**
11:00 PM	134	4	0	59	**197**
Midnight	134	2	0	44	**180**
Maximum	134	37	48	147	**289**
APRIL WEEKDAY "TOTAL SITE" PARKING ACCUMULATIONS					
6:00 AM	125	2	0	0	**127**
7:00 AM	119	11	0	14	**144**
8:00 AM	106	33	14	43	**196**
9:00 AM	92	33	29	14	**168**
10:00 AM	79	37	29	14	**159**
11:00 AM	79	37	29	7	**152**
Noon	73	37	31	143	**284** *
1:00 PM	73	37	31	143	**284** *
2:00 PM	79	37	31	47	**194**
3:00 PM	79	37	31	14	**161**
4:00 PM	86	33	31	14	**164**
5:00 PM	92	26	48	43	**209**
6:00 PM	99	15	48	79	**241**
7:00 PM	99	7	48	86	**240**
8:00 PM	106	7	48	100	**261**
9:00 PM	112	7	48	96	**263**
10:00 PM	125	7	24	86	**242**
11:00 PM	132	4	0	57	**193**
Midnight	132	2	0	43	**177**
Maximum	132	37	48	143	**284**

The Jeff Hotel Project
Weekday Parking Demand

TIME OF DAY	HOTEL GUEST	HOTEL EMPLOYEE	MEETING ROOM CUSTOMER	RESTAURANT CUSTOMER	TOTAL PARKING DEMAND
MAY WEEKDAY "TOTAL SITE" PARKING ACCUMULATIONS					
6:00 AM	128	2	0	0	**130**
7:00 AM	122	11	0	15	**148**
8:00 AM	108	33	14	45	**200**
9:00 AM	95	33	29	15	**172**
10:00 AM	81	37	29	15	**162**
11:00 AM	81	37	29	7	**154**
Noon	74	37	31	149	**291** *
1:00 PM	74	37	31	149	**291** *
2:00 PM	81	37	31	49	**198**
3:00 PM	81	37	31	15	**164**
4:00 PM	88	33	31	15	**167**
5:00 PM	95	26	48	45	**214**
6:00 PM	101	15	48	82	**246**
7:00 PM	101	7	48	89	**245**
8:00 PM	108	7	48	104	**267**
9:00 PM	115	7	48	100	**270**
10:00 PM	128	7	24	89	**248**
11:00 PM	135	4	0	60	**199**
Midnight	135	2	0	45	**182**
Maximum	135	37	48	149	**291**
JUNE WEEKDAY "TOTAL SITE" PARKING ACCUMULATIONS					
6:00 AM	140	2	0	0	**142**
7:00 AM	132	11	0	15	**158**
8:00 AM	118	33	14	44	**209**
9:00 AM	103	33	29	15	**180**
10:00 AM	88	37	29	15	**169**
11:00 AM	88	37	29	7	**161**
Noon	81	37	31	147	**296** *
1:00 PM	81	37	31	147	**296** *
2:00 PM	88	37	31	49	**205**
3:00 PM	88	37	31	15	**171**
4:00 PM	96	33	31	15	**175**
5:00 PM	103	26	48	44	**221**
6:00 PM	110	15	48	81	**254**
7:00 PM	110	7	48	88	**253**
8:00 PM	118	7	48	103	**276**
9:00 PM	125	7	48	98	**278**
10:00 PM	140	7	24	88	**259**
11:00 PM	147	4	0	59	**210**
Midnight	147	2	0	44	**193**
Maximum	147	37	48	147	**296**
JULY WEEKDAY "TOTAL SITE" PARKING ACCUMULATIONS					
6:00 AM	137	2	0	0	**139**
7:00 AM	130	11	0	15	**156**
8:00 AM	115	33	14	46	**208**
9:00 AM	101	33	29	15	**178**
10:00 AM	86	37	29	15	**167**
11:00 AM	86	37	29	8	**160**
Noon	79	37	31	152	**299** *
1:00 PM	79	37	31	152	**299** *
2:00 PM	86	37	31	50	**204**
3:00 PM	86	37	31	15	**169**
4:00 PM	94	33	31	15	**173**
5:00 PM	101	26	48	46	**221**
6:00 PM	108	15	48	84	**255**
7:00 PM	108	7	48	91	**254**
8:00 PM	115	7	48	106	**276**
9:00 PM	122	7	48	102	**279**
10:00 PM	137	7	24	91	**259**
11:00 PM	144	4	0	61	**209**
Midnight	144	2	0	46	**192**
Maximum	144	37	48	152	**299**
AUGUST WEEKDAY "TOTAL SITE" PARKING ACCUMULATIONS					
6:00 AM	128	2	0	0	**130**
7:00 AM	122	11	0	15	**148**
8:00 AM	108	33	14	46	**201**
9:00 AM	95	33	29	15	**172**
10:00 AM	81	37	29	15	**162**
11:00 AM	81	37	29	8	**155**
Noon	74	37	31	153	**295** *
1:00 PM	74	37	31	153	**295** *
2:00 PM	81	37	31	50	**199**
3:00 PM	81	37	31	15	**164**
4:00 PM	88	33	31	15	**167**
5:00 PM	95	26	48	46	**215**
6:00 PM	101	15	48	84	**248**
7:00 PM	101	7	48	92	**248**
8:00 PM	108	7	48	107	**270**
9:00 PM	115	7	48	103	**273**
10:00 PM	128	7	24	92	**251**
11:00 PM	135	4	0	61	**200**
Midnight	135	2	0	46	**183**
Maximum	135	37	48	153	**295**

The Jeff Hotel Project
Weekday Parking Demand

TIME OF DAY	HOTEL GUEST	HOTEL EMPLOYEE	MEETING ROOM CUSTOMER	RESTAURANT CUSTOMER	TOTAL PARKING DEMAND
SEPTEMBER WEEKDAY "TOTAL SITE" PARKING ACCUMULATIONS					
6:00 AM	130	2	0	0	**132**
7:00 AM	123	11	0	14	**148**
8:00 AM	110	33	14	42	**199**
9:00 AM	96	33	29	14	**172**
10:00 AM	82	37	29	14	**162**
11:00 AM	82	37	29	7	**155**
Noon	75	37	31	141	**284** *
1:00 PM	75	37	31	141	**284** *
2:00 PM	82	37	31	47	**197**
3:00 PM	82	37	31	14	**164**
4:00 PM	89	33	31	14	**167**
5:00 PM	96	26	48	42	**212**
6:00 PM	103	15	48	78	**244**
7:00 PM	103	7	48	85	**243**
8:00 PM	110	7	48	99	**264**
9:00 PM	116	7	48	94	**265**
10:00 PM	130	7	24	85	**246**
11:00 PM	137	4	0	56	**197**
Midnight	137	2	0	42	**181**
Maximum	137	37	48	141	**284**
OCTOBER WEEKDAY "TOTAL SITE" PARKING ACCUMULATIONS					
6:00 AM	130	2	0	0	**132**
7:00 AM	123	11	0	15	**149**
8:00 AM	110	33	14	45	**202**
9:00 AM	96	33	29	15	**173**
10:00 AM	82	37	29	15	**163**
11:00 AM	82	37	29	7	**155**
Noon	75	37	31	149	**292** *
1:00 PM	75	37	31	149	**292** *
2:00 PM	82	37	31	49	**199**
3:00 PM	82	37	31	15	**165**
4:00 PM	89	33	31	15	**168**
5:00 PM	96	26	48	45	**215**
6:00 PM	103	15	48	82	**248**
7:00 PM	103	7	48	89	**247**
8:00 PM	110	7	48	104	**269**
9:00 PM	116	7	48	100	**271**
10:00 PM	130	7	24	89	**250**
11:00 PM	137	4	0	60	**201**
Midnight	137	2	0	45	**184**
Maximum	137	37	48	149	**292**
NOVEMBER WEEKDAY "TOTAL SITE" PARKING ACCUMULATIONS					
6:00 AM	113	2	0	0	**115**
7:00 AM	107	11	0	14	**132**
8:00 AM	95	33	14	43	**185**
9:00 AM	83	33	29	14	**159**
10:00 AM	71	37	29	14	**151**
11:00 AM	71	37	29	7	**144**
Noon	65	37	31	144	**277** *
1:00 PM	65	37	31	144	**277** *
2:00 PM	71	37	31	48	**187**
3:00 PM	71	37	31	14	**153**
4:00 PM	77	33	31	14	**155**
5:00 PM	83	26	48	43	**200**
6:00 PM	89	15	48	79	**231**
7:00 PM	89	7	48	86	**230**
8:00 PM	95	7	48	101	**251**
9:00 PM	101	7	48	96	**252**
10:00 PM	113	7	24	86	**230**
11:00 PM	119	4	0	58	**181**
Midnight	119	2	0	43	**164**
Maximum	119	37	48	144	**277**
DECEMBER WEEKDAY "TOTAL SITE" PARKING ACCUMULATIONS					
6:00 AM	94	2	0	0	**96**
7:00 AM	89	11	0	16	**116**
8:00 AM	79	33	14	47	**173**
9:00 AM	69	33	29	16	**147**
10:00 AM	59	37	29	16	**141**
11:00 AM	59	37	29	8	**133**
Noon	54	37	31	155	**277** *
1:00 PM	54	37	31	155	**277** *
2:00 PM	59	37	31	51	**178**
3:00 PM	59	37	31	16	**143**
4:00 PM	64	33	31	16	**144**
5:00 PM	69	26	48	47	**190**
6:00 PM	74	15	48	85	**222**
7:00 PM	74	7	48	93	**222**
8:00 PM	79	7	48	109	**243**
9:00 PM	84	7	48	104	**243**
10:00 PM	94	7	24	93	**218**
11:00 PM	99	4	0	62	**165**
Midnight	99	2	0	47	**148**
Maximum	99	37	48	155	**277**

The Jeff Hotel Project
Weekday Parking Demand

TIME OF DAY	HOTEL		MEETING ROOM	RESTAURANT	TOTAL PARKING DEMAND
	HOTEL				
	GUEST	EMPLOYEE	CUSTOMER	CUSTOMER	
LATE DECEMBER WEEKDAY "TOTAL SITE" PARKING ACCUMULATIONS					
6:00 AM	70	2	0	0	**72**
7:00 AM	67	11	0	15	**93**
8:00 AM	59	33	14	44	**150**
9:00 AM	52	33	29	15	**129**
10:00 AM	44	37	29	15	**125**
11:00 AM	44	37	29	7	**117**
Noon	41	37	31	147	**256** *
1:00 PM	41	37	31	147	**256** *
2:00 PM	44	37	31	49	**161**
3:00 PM	44	37	31	15	**127**
4:00 PM	48	33	31	15	**127**
5:00 PM	52	26	48	44	**170**
6:00 PM	56	15	48	81	**200**
7:00 PM	56	7	48	88	**199**
8:00 PM	59	7	48	103	**217**
9:00 PM	63	7	48	98	**216**
10:00 PM	70	7	24	88	**189**
11:00 PM	74	4	0	59	**137**
Midnight	74	2	0	44	**120**
Maximum	74	37	48	147	**256**

The Jeff Hotel Project
Weekend Parking Demand

TIME OF DAY	HOTEL GUEST	HOTEL EMPLOYEE	MEETING ROOM CUSTOMER	RESTAURANT CUSTOMER	TOTAL PARKING DEMAND
JANUARY WEEKEND "TOTAL SITE" PARKING ACCUMULATIONS					
6:00 AM	89	1	0	0	**90**
7:00 AM	85	8	0	13	**106**
8:00 AM	75	23	14	40	**152**
9:00 AM	66	23	29	13	**131**
10:00 AM	56	26	29	13	**124**
11:00 AM	56	26	29	7	**118**
Noon	52	26	31	132	**241** *
1:00 PM	52	26	31	132	**241** *
2:00 PM	56	26	31	44	**157**
3:00 PM	56	26	31	13	**126**
4:00 PM	61	23	31	13	**128**
5:00 PM	66	20	48	40	**174**
6:00 PM	71	16	48	73	**208**
7:00 PM	71	14	48	79	**212**
8:00 PM	75	14	48	92	**229**
9:00 PM	80	14	48	88	**230**
10:00 PM	89	12	24	79	**204**
11:00 PM	94	12	0	53	**159**
Midnight	94	8	0	40	**142**
Maximum	94	26	48	132	**241**
FEBRUARY WEEKEND "TOTAL SITE" PARKING ACCUMULATIONS					
6:00 AM	107	1	0	0	**108**
7:00 AM	102	8	0	13	**123**
8:00 AM	90	23	14	40	**167**
9:00 AM	79	23	29	13	**144**
10:00 AM	68	26	29	13	**136**
11:00 AM	68	26	29	7	**130**
Noon	62	26	31	133	**252** *
1:00 PM	62	26	31	133	**252** *
2:00 PM	68	26	31	44	**169**
3:00 PM	68	26	31	13	**138**
4:00 PM	73	23	31	13	**140**
5:00 PM	79	20	48	40	**187**
6:00 PM	85	16	48	73	**222**
7:00 PM	85	14	48	80	**227**
8:00 PM	90	14	48	93	**245**
9:00 PM	96	14	48	89	**247**
10:00 PM	107	12	24	80	**223**
11:00 PM	113	12	0	53	**178**
Midnight	113	8	0	40	**161**
Maximum	113	26	48	133	**252**
MARCH WEEKEND "TOTAL SITE" PARKING ACCUMULATIONS					
6:00 AM	115	1	0	0	**116**
7:00 AM	109	8	0	15	**132**
8:00 AM	97	23	14	44	**178**
9:00 AM	85	23	29	15	**152**
10:00 AM	73	26	29	15	**143**
11:00 AM	73	26	29	7	**135**
Noon	67	26	31	147	**271** *
1:00 PM	67	26	31	147	**271** *
2:00 PM	73	26	31	49	**179**
3:00 PM	73	26	31	15	**145**
4:00 PM	79	23	31	15	**148**
5:00 PM	85	20	48	44	**197**
6:00 PM	91	16	48	81	**236**
7:00 PM	91	14	48	88	**241**
8:00 PM	97	14	48	103	**262**
9:00 PM	103	14	48	98	**263**
10:00 PM	115	12	24	88	**239**
11:00 PM	121	12	0	59	**192**
Midnight	121	8	0	44	**173**
Maximum	121	26	48	147	**271**
APRIL WEEKEND "TOTAL SITE" PARKING ACCUMULATIONS					
6:00 AM	113	1	0	0	**114**
7:00 AM	107	8	0	14	**129**
8:00 AM	95	23	14	43	**175**
9:00 AM	83	23	29	14	**149**
10:00 AM	71	26	29	14	**140**
11:00 AM	71	26	29	7	**133**
Noon	65	26	31	143	**265** *
1:00 PM	65	26	31	143	**265** *
2:00 PM	71	26	31	47	**175**
3:00 PM	71	26	31	14	**142**
4:00 PM	77	23	31	14	**145**
5:00 PM	83	20	48	43	**194**
6:00 PM	89	16	48	79	**232**
7:00 PM	89	14	48	86	**237**
8:00 PM	95	14	48	100	**257**
9:00 PM	101	14	48	96	**259**
10:00 PM	113	12	24	86	**235**
11:00 PM	119	12	0	57	**188**
Midnight	119	8	0	43	**170**
Maximum	119	26	48	143	**265**

The Jeff Hotel Project
Weekend Parking Demand

TIME OF DAY	HOTEL GUEST	HOTEL EMPLOYEE	MEETING ROOM CUSTOMER	RESTAURANT CUSTOMER	TOTAL PARKING DEMAND
MAY WEEKEND "TOTAL SITE" PARKING ACCUMULATIONS					
6:00 AM	116	1	0	0	**117**
7:00 AM	110	8	0	15	**133**
8:00 AM	98	23	14	45	**180**
9:00 AM	85	23	29	15	**152**
10:00 AM	73	26	29	15	**143**
11:00 AM	73	26	29	7	**135**
Noon	67	26	31	149	**273** *
1:00 PM	67	26	31	149	**273** *
2:00 PM	73	26	31	49	**179**
3:00 PM	73	26	31	15	**145**
4:00 PM	79	23	31	15	**148**
5:00 PM	85	20	48	45	**198**
6:00 PM	92	16	48	82	**238**
7:00 PM	92	14	48	89	**243**
8:00 PM	98	14	48	104	**264**
9:00 PM	104	14	48	100	**266**
10:00 PM	116	12	24	89	**241**
11:00 PM	122	12	0	60	**194**
Midnight	122	8	0	45	**175**
Maximum	122	26	48	149	**273**
JUNE WEEKEND "TOTAL SITE" PARKING ACCUMULATIONS					
6:00 AM	125	1	0	0	**126**
7:00 AM	119	8	0	15	**142**
8:00 AM	106	23	14	44	**187**
9:00 AM	92	23	29	15	**159**
10:00 AM	79	26	29	15	**149**
11:00 AM	79	26	29	7	**141**
Noon	73	26	31	147	**277** *
1:00 PM	73	26	31	147	**277** *
2:00 PM	79	26	31	49	**185**
3:00 PM	79	26	31	15	**151**
4:00 PM	86	23	31	15	**155**
5:00 PM	92	20	48	44	**204**
6:00 PM	99	16	48	81	**244**
7:00 PM	99	14	48	88	**249**
8:00 PM	106	14	48	103	**271**
9:00 PM	112	14	48	98	**272**
10:00 PM	125	12	24	88	**249**
11:00 PM	132	12	0	59	**203**
Midnight	132	8	0	44	**184**
Maximum	132	26	48	147	**277**
JULY WEEKEND "TOTAL SITE" PARKING ACCUMULATIONS					
6:00 AM	124	1	0	0	**125**
7:00 AM	117	8	0	15	**140**
8:00 AM	104	23	14	46	**187**
9:00 AM	91	23	29	15	**158**
10:00 AM	78	26	29	15	**148**
11:00 AM	78	26	29	8	**141**
Noon	72	26	31	152	**281** *
1:00 PM	72	26	31	152	**281** *
2:00 PM	78	26	31	50	**185**
3:00 PM	78	26	31	15	**150**
4:00 PM	85	23	31	15	**154**
5:00 PM	91	20	48	46	**205**
6:00 PM	98	16	48	84	**246**
7:00 PM	98	14	48	91	**251**
8:00 PM	104	14	48	106	**272**
9:00 PM	111	14	48	102	**275**
10:00 PM	124	12	24	91	**251**
11:00 PM	130	12	0	61	**203**
Midnight	130	8	0	46	**184**
Maximum	130	26	48	152	**281**
AUGUST WEEKEND "TOTAL SITE" PARKING ACCUMULATIONS					
6:00 AM	116	1	0	0	**117**
7:00 AM	110	8	0	15	**133**
8:00 AM	98	23	14	46	**181**
9:00 AM	85	23	29	15	**152**
10:00 AM	73	26	29	15	**143**
11:00 AM	73	26	29	8	**136**
Noon	67	26	31	153	**277** *
1:00 PM	67	26	31	153	**277** *
2:00 PM	73	26	31	50	**180**
3:00 PM	73	26	31	15	**145**
4:00 PM	79	23	31	15	**148**
5:00 PM	85	20	48	46	**199**
6:00 PM	92	16	48	84	**240**
7:00 PM	92	14	48	92	**246**
8:00 PM	98	14	48	107	**267**
9:00 PM	104	14	48	103	**269**
10:00 PM	116	12	24	92	**244**
11:00 PM	122	12	0	61	**195**
Midnight	122	8	0	46	**176**
Maximum	122	26	48	153	**277**

The Jeff Hotel Project
Weekend Parking Demand

TIME OF DAY	HOTEL		HOTEL		TOTAL PARKING DEMAND
	HOTEL GUEST	HOTEL EMPLOYEE	MEETING ROOM CUSTOMER	RESTAURANT CUSTOMER	
SEPTEMBER WEEKEND "TOTAL SITE" PARKING ACCUMULATIONS					
6:00 AM	117	1	0	0	**118**
7:00 AM	111	8	0	14	**133**
8:00 AM	98	23	14	42	**177**
9:00 AM	86	23	29	14	**152**
10:00 AM	74	26	29	14	**143**
11:00 AM	74	26	29	7	**136**
Noon	68	26	31	141	**266** *
1:00 PM	68	26	31	141	**266** *
2:00 PM	74	26	31	47	**178**
3:00 PM	74	26	31	14	**145**
4:00 PM	80	23	31	14	**148**
5:00 PM	86	20	48	42	**196**
6:00 PM	92	16	48	78	**234**
7:00 PM	92	14	48	85	**239**
8:00 PM	98	14	48	99	**259**
9:00 PM	105	14	48	94	**261**
10:00 PM	117	12	24	85	**238**
11:00 PM	123	12	0	56	**191**
Midnight	123	8	0	42	**173**
Maximum	123	26	48	141	**266**
OCTOBER WEEKEND "TOTAL SITE" PARKING ACCUMULATIONS					
6:00 AM	117	1	0	0	**118**
7:00 AM	111	8	0	15	**134**
8:00 AM	98	23	14	45	**180**
9:00 AM	86	23	29	15	**153**
10:00 AM	74	26	29	15	**144**
11:00 AM	74	26	29	7	**136**
Noon	68	26	31	149	**274** *
1:00 PM	68	26	31	149	**274** *
2:00 PM	74	26	31	49	**180**
3:00 PM	74	26	31	15	**146**
4:00 PM	80	23	31	15	**149**
5:00 PM	86	20	48	45	**199**
6:00 PM	92	16	48	82	**238**
7:00 PM	92	14	48	89	**243**
8:00 PM	98	14	48	104	**264**
9:00 PM	105	14	48	100	**267**
10:00 PM	117	12	24	89	**242**
11:00 PM	123	12	0	60	**195**
Midnight	123	8	0	45	**176**
Maximum	123	26	48	149	**274**
NOVEMBER WEEKEND "TOTAL SITE" PARKING ACCUMULATIONS					
6:00 AM	102	1	0	0	**103**
7:00 AM	96	8	0	14	**118**
8:00 AM	86	23	14	43	**166**
9:00 AM	75	23	29	14	**141**
10:00 AM	64	26	29	14	**133**
11:00 AM	64	26	29	7	**126**
Noon	59	26	31	144	**260** *
1:00 PM	59	26	31	144	**260** *
2:00 PM	64	26	31	48	**169**
3:00 PM	64	26	31	14	**135**
4:00 PM	70	23	31	14	**138**
5:00 PM	75	20	48	43	**186**
6:00 PM	80	16	48	79	**223**
7:00 PM	80	14	48	86	**228**
8:00 PM	86	14	48	101	**249**
9:00 PM	91	14	48	96	**249**
10:00 PM	102	12	24	86	**224**
11:00 PM	107	12	0	58	**177**
Midnight	107	8	0	43	**158**
Maximum	107	26	48	144	**260**
DECEMBER WEEKEND "TOTAL SITE" PARKING ACCUMULATIONS					
6:00 AM	85	1	0	0	**86**
7:00 AM	80	8	0	16	**104**
8:00 AM	71	23	14	47	**155**
9:00 AM	62	23	29	16	**130**
10:00 AM	53	26	29	16	**124**
11:00 AM	53	26	29	8	**116**
Noon	49	26	31	155	**261** *
1:00 PM	49	26	31	155	**261** *
2:00 PM	53	26	31	51	**161**
3:00 PM	53	26	31	16	**126**
4:00 PM	58	23	31	16	**128**
5:00 PM	62	20	48	47	**177**
6:00 PM	67	16	48	85	**216**
7:00 PM	67	14	48	93	**222**
8:00 PM	71	14	48	109	**242**
9:00 PM	76	14	48	104	**242**
10:00 PM	85	12	24	93	**214**
11:00 PM	89	12	0	62	**163**
Midnight	89	8	0	47	**144**
Maximum	89	26	48	155	**261**

The Jeff Hotel Project
Weekend Parking Demand

TIME OF DAY	HOTEL		MEETING ROOM	RESTAURANT	TOTAL PARKING DEMAND
	HOTEL				
	GUEST	EMPLOYEE	CUSTOMER	CUSTOMER	
LATE DECEMBER WEEKEND "TOTAL SITE" PARKING ACCUMULATIONS					
6:00 AM	63	1	0	0	**64**
7:00 AM	59	8	0	15	**82**
8:00 AM	53	23	14	44	**134**
9:00 AM	46	23	29	15	**113**
10:00 AM	40	26	29	15	**110**
11:00 AM	40	26	29	7	**102**
Noon	36	26	31	147	**240 ***
1:00 PM	36	26	31	147	**240 ***
2:00 PM	40	26	31	49	**146**
3:00 PM	40	26	31	15	**112**
4:00 PM	43	23	31	15	**112**
5:00 PM	46	20	48	44	**158**
6:00 PM	50	16	48	81	**195**
7:00 PM	50	14	48	88	**200**
8:00 PM	53	14	48	103	**218**
9:00 PM	56	14	48	98	**216**
10:00 PM	63	12	24	88	**187**
11:00 PM	66	12	0	59	**137**
Midnight	66	8	0	44	**118**
Maximum	66	26	48	147	**240**

PROJECT SHARED PARKING CALCULATION WORKSHEETS
(USING ULI *SHARED PARKING* RECOMMENDED PARKING RATIOS)

The Jeff Hotel Project
Weekday Parking Demand

TIME OF DAY	HOTEL GUEST	HOTEL EMPLOYEE	MEETING ROOM CUSTOMER	RESTAURANT CUSTOMER	TOTAL PARKING DEMAND
JANUARY WEEKDAY "TOTAL SITE" PARKING ACCUMULATIONS					
6:00 AM	118	2	0	0	**120**
7:00 AM	112	13	0	13	**138**
8:00 AM	99	40	43	40	**222**
9:00 AM	87	40	86	13	**226**
10:00 AM	74	44	86	13	**217**
11:00 AM	74	44	86	7	**211**
Noon	68	44	94	132	**338**
1:00 PM	68	44	94	132	**338**
2:00 PM	74	44	94	44	**256**
3:00 PM	74	44	94	13	**225**
4:00 PM	81	40	94	13	**228**
5:00 PM	87	31	144	40	**302**
6:00 PM	93	18	144	73	**328**
7:00 PM	93	9	144	79	**325**
8:00 PM	99	9	144	92	**344**
9:00 PM	105	9	144	88	**346** *
10:00 PM	118	9	72	79	**278**
11:00 PM	124	4	0	53	**181**
Midnight	124	2	0	40	**166**
Maximum	124	44	144	132	**346**
FEBRUARY WEEKDAY "TOTAL SITE" PARKING ACCUMULATIONS					
6:00 AM	142	2	0	0	**144**
7:00 AM	134	13	0	13	**160**
8:00 AM	119	40	43	40	**242**
9:00 AM	104	40	86	13	**243**
10:00 AM	89	44	86	13	**232**
11:00 AM	89	44	86	7	**226**
Noon	82	44	94	133	**353**
1:00 PM	82	44	94	133	**353**
2:00 PM	89	44	94	44	**271**
3:00 PM	89	44	94	13	**240**
4:00 PM	97	40	94	13	**244**
5:00 PM	104	31	144	40	**319**
6:00 PM	112	18	144	73	**347**
7:00 PM	112	9	144	80	**345**
8:00 PM	119	9	144	93	**365**
9:00 PM	127	9	144	89	**369** *
10:00 PM	142	9	72	80	**303**
11:00 PM	149	4	0	53	**206**
Midnight	149	2	0	40	**191**
Maximum	149	44	144	133	**369**
MARCH WEEKDAY "TOTAL SITE" PARKING ACCUMULATIONS					
6:00 AM	151	2	0	0	**153**
7:00 AM	143	13	0	15	**171**
8:00 AM	127	40	43	44	**254**
9:00 AM	111	40	86	15	**252**
10:00 AM	95	44	86	15	**240**
11:00 AM	95	44	86	7	**232**
Noon	87	44	94	147	**372**
1:00 PM	87	44	94	147	**372**
2:00 PM	95	44	94	49	**282**
3:00 PM	95	44	94	15	**248**
4:00 PM	103	40	94	15	**252**
5:00 PM	111	31	144	44	**330**
6:00 PM	119	18	144	81	**362**
7:00 PM	119	9	144	88	**360**
8:00 PM	127	9	144	103	**383**
9:00 PM	135	9	144	98	**386** *
10:00 PM	151	9	72	88	**320**
11:00 PM	159	4	0	59	**222**
Midnight	159	2	0	44	**205**
Maximum	159	44	144	147	**386**
APRIL WEEKDAY "TOTAL SITE" PARKING ACCUMULATIONS					
6:00 AM	150	2	0	0	**152**
7:00 AM	142	13	0	14	**169**
8:00 AM	126	40	43	43	**252**
9:00 AM	111	40	86	14	**251**
10:00 AM	95	44	86	14	**239**
11:00 AM	95	44	86	7	**232**
Noon	87	44	94	143	**368**
1:00 PM	87	44	94	143	**368**
2:00 PM	95	44	94	47	**280**
3:00 PM	95	44	94	14	**247**
4:00 PM	103	40	94	14	**251**
5:00 PM	111	31	144	43	**329**
6:00 PM	119	18	144	79	**360**
7:00 PM	119	9	144	86	**358**
8:00 PM	126	9	144	100	**379**
9:00 PM	134	9	144	96	**383** *
10:00 PM	150	9	72	86	**317**
11:00 PM	158	4	0	57	**219**
Midnight	158	2	0	43	**203**
Maximum	158	44	144	143	**383**

The Jeff Hotel Project
Weekday Parking Demand

TIME OF DAY	HOTEL GUEST	HOTEL EMPLOYEE	MEETING ROOM CUSTOMER	RESTAURANT CUSTOMER	TOTAL PARKING DEMAND
MAY WEEKDAY "TOTAL SITE" PARKING ACCUMULATIONS					
6:00 AM	153	2	0	0	**155**
7:00 AM	145	13	0	15	**173**
8:00 AM	129	40	43	45	**257**
9:00 AM	113	40	86	15	**254**
10:00 AM	97	44	86	15	**242**
11:00 AM	97	44	86	7	**234**
Noon	89	44	94	149	**376**
1:00 PM	89	44	94	149	**376**
2:00 PM	97	44	94	49	**284**
3:00 PM	97	44	94	15	**250**
4:00 PM	105	40	94	15	**254**
5:00 PM	113	31	144	45	**333**
6:00 PM	121	18	144	82	**365**
7:00 PM	121	9	144	89	**363**
8:00 PM	129	9	144	104	**386**
9:00 PM	137	9	144	100	**390** *
10:00 PM	153	9	72	89	**323**
11:00 PM	161	4	0	60	**225**
Midnight	161	2	0	45	**208**
Maximum	161	44	144	149	**390**
JUNE WEEKDAY "TOTAL SITE" PARKING ACCUMULATIONS					
6:00 AM	166	2	0	0	**168**
7:00 AM	158	13	0	15	**186**
8:00 AM	140	40	43	44	**267**
9:00 AM	123	40	86	15	**264**
10:00 AM	105	44	86	15	**250**
11:00 AM	105	44	86	7	**242**
Noon	96	44	94	147	**381**
1:00 PM	96	44	94	147	**381**
2:00 PM	105	44	94	49	**292**
3:00 PM	105	44	94	15	**258**
4:00 PM	114	40	94	15	**263**
5:00 PM	123	31	144	44	**342**
6:00 PM	131	18	144	81	**374**
7:00 PM	131	9	144	88	**372**
8:00 PM	140	9	144	103	**396**
9:00 PM	149	9	144	98	**400** *
10:00 PM	166	9	72	88	**335**
11:00 PM	175	4	0	59	**238**
Midnight	175	2	0	44	**221**
Maximum	175	44	144	147	**400**
JULY WEEKDAY "TOTAL SITE" PARKING ACCUMULATIONS					
6:00 AM	163	2	0	0	**165**
7:00 AM	155	13	0	15	**183**
8:00 AM	138	40	43	46	**267**
9:00 AM	120	40	86	15	**261**
10:00 AM	103	44	86	15	**248**
11:00 AM	103	44	86	8	**241**
Noon	95	44	94	152	**385**
1:00 PM	95	44	94	152	**385**
2:00 PM	103	44	94	50	**291**
3:00 PM	103	44	94	15	**256**
4:00 PM	112	40	94	15	**261**
5:00 PM	120	31	144	46	**341**
6:00 PM	129	18	144	84	**375**
7:00 PM	129	9	144	91	**373**
8:00 PM	138	9	144	106	**397**
9:00 PM	146	9	144	102	**401** *
10:00 PM	163	9	72	91	**335**
11:00 PM	172	4	0	61	**237**
Midnight	172	2	0	46	**220**
Maximum	172	44	144	152	**401**
AUGUST WEEKDAY "TOTAL SITE" PARKING ACCUMULATIONS					
6:00 AM	153	2	0	0	**155**
7:00 AM	145	13	0	15	**173**
8:00 AM	129	40	43	46	**258**
9:00 AM	113	40	86	15	**254**
10:00 AM	97	44	86	15	**242**
11:00 AM	97	44	86	8	**235**
Noon	89	44	94	153	**380**
1:00 PM	89	44	94	153	**380**
2:00 PM	97	44	94	50	**285**
3:00 PM	97	44	94	15	**250**
4:00 PM	105	40	94	15	**254**
5:00 PM	113	31	144	46	**334**
6:00 PM	121	18	144	84	**367**
7:00 PM	121	9	144	92	**366**
8:00 PM	129	9	144	107	**389**
9:00 PM	137	9	144	103	**393** *
10:00 PM	153	9	72	92	**326**
11:00 PM	161	4	0	61	**226**
Midnight	161	2	0	46	**209**
Maximum	161	44	144	153	**393**

The Jeff Hotel Project
Weekday Parking Demand

TIME OF DAY	HOTEL GUEST	HOTEL EMPLOYEE	MEETING ROOM CUSTOMER	RESTAURANT CUSTOMER	TOTAL PARKING DEMAND
SEPTEMBER WEEKDAY "TOTAL SITE" PARKING ACCUMULATIONS					
6:00 AM	155	2	0	0	**157**
7:00 AM	147	13	0	14	**174**
8:00 AM	130	40	43	42	**255**
9:00 AM	114	40	86	14	**254**
10:00 AM	98	44	86	14	**242**
11:00 AM	98	44	86	7	**235**
Noon	90	44	94	141	**369**
1:00 PM	90	44	94	141	**369**
2:00 PM	98	44	94	47	**283**
3:00 PM	98	44	94	14	**250**
4:00 PM	106	40	94	14	**254**
5:00 PM	114	31	144	42	**331**
6:00 PM	122	18	144	78	**362**
7:00 PM	122	9	144	85	**360**
8:00 PM	130	9	144	99	**382**
9:00 PM	139	9	144	94	**386** *
10:00 PM	155	9	72	85	**321**
11:00 PM	163	4	0	56	**223**
Midnight	163	2	0	42	**207**
Maximum	163	44	144	141	**386**
OCTOBER WEEKDAY "TOTAL SITE" PARKING ACCUMULATIONS					
6:00 AM	155	2	0	0	**157**
7:00 AM	147	13	0	15	**175**
8:00 AM	130	40	43	45	**258**
9:00 AM	114	40	86	15	**255**
10:00 AM	98	44	86	15	**243**
11:00 AM	98	44	86	7	**235**
Noon	90	44	94	149	**377**
1:00 PM	90	44	94	149	**377**
2:00 PM	98	44	94	49	**285**
3:00 PM	98	44	94	15	**251**
4:00 PM	106	40	94	15	**255**
5:00 PM	114	31	144	45	**334**
6:00 PM	122	18	144	82	**366**
7:00 PM	122	9	144	89	**364**
8:00 PM	130	9	144	104	**387**
9:00 PM	139	9	144	100	**392** *
10:00 PM	155	9	72	89	**325**
11:00 PM	163	4	0	60	**227**
Midnight	163	2	0	45	**210**
Maximum	163	44	144	149	**392**
NOVEMBER WEEKDAY "TOTAL SITE" PARKING ACCUMULATIONS					
6:00 AM	135	2	0	0	**137**
7:00 AM	128	13	0	14	**155**
8:00 AM	114	40	43	43	**240**
9:00 AM	99	40	86	14	**239**
10:00 AM	85	44	86	14	**229**
11:00 AM	85	44	86	7	**222**
Noon	78	44	94	144	**360**
1:00 PM	78	44	94	144	**360**
2:00 PM	85	44	94	48	**271**
3:00 PM	85	44	94	14	**237**
4:00 PM	92	40	94	14	**240**
5:00 PM	99	31	144	43	**317**
6:00 PM	107	18	144	79	**348**
7:00 PM	107	9	144	86	**346**
8:00 PM	114	9	144	101	**368**
9:00 PM	121	9	144	96	**370** *
10:00 PM	135	9	72	86	**302**
11:00 PM	142	4	0	58	**204**
Midnight	142	2	0	43	**187**
Maximum	142	44	144	144	**370**
DECEMBER WEEKDAY "TOTAL SITE" PARKING ACCUMULATIONS					
6:00 AM	111	2	0	0	**113**
7:00 AM	105	13	0	16	**134**
8:00 AM	94	40	43	47	**224**
9:00 AM	82	40	86	16	**224**
10:00 AM	70	44	86	16	**216**
11:00 AM	70	44	86	8	**208**
Noon	64	44	94	155	**357** *
1:00 PM	64	44	94	155	**357** *
2:00 PM	70	44	94	51	**259**
3:00 PM	70	44	94	16	**224**
4:00 PM	76	40	94	16	**226**
5:00 PM	82	31	144	47	**304**
6:00 PM	88	18	144	85	**335**
7:00 PM	88	9	144	93	**334**
8:00 PM	94	9	144	109	**356**
9:00 PM	99	9	144	104	**356**
10:00 PM	111	9	72	93	**285**
11:00 PM	117	4	0	62	**183**
Midnight	117	2	0	47	**166**
Maximum	117	44	144	155	**357**

The Jeff Hotel Project
Weekday Parking Demand

TIME OF DAY	HOTEL		MEETING ROOM	RESTAURANT	TOTAL PARKING DEMAND
	HOTEL				
	GUEST	EMPLOYEE	CUSTOMER	CUSTOMER	
LATE DECEMBER WEEKDAY "TOTAL SITE" PARKING ACCUMULATIONS					
6:00 AM	84	2	0	0	**86**
7:00 AM	79	13	0	15	**107**
8:00 AM	70	40	43	44	**197**
9:00 AM	62	40	86	15	**203**
10:00 AM	53	44	86	15	**198**
11:00 AM	53	44	86	7	**190**
Noon	48	44	94	147	**333** *
1:00 PM	48	44	94	147	**333** *
2:00 PM	53	44	94	49	**240**
3:00 PM	53	44	94	15	**206**
4:00 PM	57	40	94	15	**206**
5:00 PM	62	31	144	44	**281**
6:00 PM	66	18	144	81	**309**
7:00 PM	66	9	144	88	**307**
8:00 PM	70	9	144	103	**326**
9:00 PM	75	9	144	98	**326**
10:00 PM	84	9	72	88	**253**
11:00 PM	88	4	0	59	**151**
Midnight	88	2	0	44	**134**
Maximum	88	44	144	147	**333**

The Jeff Hotel Project
Weekend Parking Demand

TIME OF DAY	HOTEL		HOTEL		TOTAL PARKING DEMAND
	HOTEL GUEST	HOTEL EMPLOYEE	MEETING ROOM CUSTOMER	RESTAURANT CUSTOMER	
JANUARY WEEKEND "TOTAL SITE" PARKING ACCUMULATIONS					
6:00 AM	106	2	0	0	**108**
7:00 AM	101	10	0	13	**124**
8:00 AM	90	29	43	40	**202**
9:00 AM	78	29	86	13	**206**
10:00 AM	67	32	86	13	**198**
11:00 AM	67	32	86	7	**192**
Noon	62	32	94	132	**320**
1:00 PM	62	32	94	132	**320**
2:00 PM	67	32	94	44	**237**
3:00 PM	67	32	94	13	**206**
4:00 PM	73	29	94	13	**209**
5:00 PM	78	24	144	40	**286**
6:00 PM	84	19	144	73	**320**
7:00 PM	84	18	144	79	**325**
8:00 PM	90	18	144	92	**344**
9:00 PM	95	18	144	88	**345** *
10:00 PM	106	14	72	79	**271**
11:00 PM	112	14	0	53	**179**
Midnight	112	10	0	40	**162**
Maximum	112	32	144	132	**345**
FEBRUARY WEEKEND "TOTAL SITE" PARKING ACCUMULATIONS					
6:00 AM	127	2	0	0	**129**
7:00 AM	121	10	0	13	**144**
8:00 AM	107	29	43	40	**219**
9:00 AM	94	29	86	13	**222**
10:00 AM	80	32	86	13	**211**
11:00 AM	80	32	86	7	**205**
Noon	74	32	94	133	**333**
1:00 PM	74	32	94	133	**333**
2:00 PM	80	32	94	44	**250**
3:00 PM	80	32	94	13	**219**
4:00 PM	87	29	94	13	**223**
5:00 PM	94	24	144	40	**302**
6:00 PM	101	19	144	73	**337**
7:00 PM	101	18	144	80	**343**
8:00 PM	107	18	144	93	**362**
9:00 PM	114	18	144	89	**365** *
10:00 PM	127	14	72	80	**293**
11:00 PM	134	14	0	53	**201**
Midnight	134	10	0	40	**184**
Maximum	134	32	144	133	**365**
MARCH WEEKEND "TOTAL SITE" PARKING ACCUMULATIONS					
6:00 AM	136	2	0	0	**138**
7:00 AM	129	10	0	15	**154**
8:00 AM	114	29	43	44	**230**
9:00 AM	100	29	86	15	**230**
10:00 AM	86	32	86	15	**219**
11:00 AM	86	32	86	7	**211**
Noon	79	32	94	147	**352**
1:00 PM	79	32	94	147	**352**
2:00 PM	86	32	94	49	**261**
3:00 PM	86	32	94	15	**227**
4:00 PM	93	29	94	15	**231**
5:00 PM	100	24	144	44	**312**
6:00 PM	107	19	144	81	**351**
7:00 PM	107	18	144	88	**357**
8:00 PM	114	18	144	103	**379**
9:00 PM	122	18	144	98	**382** *
10:00 PM	136	14	72	88	**310**
11:00 PM	143	14	0	59	**216**
Midnight	143	10	0	44	**197**
Maximum	143	32	144	147	**382**
APRIL WEEKEND "TOTAL SITE" PARKING ACCUMULATIONS					
6:00 AM	135	2	0	0	**137**
7:00 AM	128	10	0	14	**152**
8:00 AM	114	29	43	43	**229**
9:00 AM	99	29	86	14	**228**
10:00 AM	85	32	86	14	**217**
11:00 AM	85	32	86	7	**210**
Noon	78	32	94	143	**347**
1:00 PM	78	32	94	143	**347**
2:00 PM	85	32	94	47	**258**
3:00 PM	85	32	94	14	**225**
4:00 PM	92	29	94	14	**229**
5:00 PM	99	24	144	43	**310**
6:00 PM	107	19	144	79	**349**
7:00 PM	107	18	144	86	**355**
8:00 PM	114	18	144	100	**376**
9:00 PM	121	18	144	96	**379** *
10:00 PM	135	14	72	86	**307**
11:00 PM	142	14	0	57	**213**
Midnight	142	10	0	43	**195**
Maximum	142	32	144	143	**379**

The Jeff Hotel Project
Weekend Parking Demand

TIME OF DAY	HOTEL GUEST	HOTEL EMPLOYEE	MEETING ROOM CUSTOMER	RESTAURANT CUSTOMER	TOTAL PARKING DEMAND
MAY WEEKEND "TOTAL SITE" PARKING ACCUMULATIONS					
6:00 AM	138	2	0	0	**140**
7:00 AM	131	10	0	15	**156**
8:00 AM	116	29	43	45	**233**
9:00 AM	102	29	86	15	**232**
10:00 AM	87	32	86	15	**220**
11:00 AM	87	32	86	7	**212**
Noon	80	32	94	149	**355**
1:00 PM	80	32	94	149	**355**
2:00 PM	87	32	94	49	**262**
3:00 PM	87	32	94	15	**228**
4:00 PM	94	29	94	15	**232**
5:00 PM	102	24	144	45	**315**
6:00 PM	109	19	144	82	**354**
7:00 PM	109	18	144	89	**360**
8:00 PM	116	18	144	104	**382**
9:00 PM	123	18	144	100	**385** *
10:00 PM	138	14	72	89	**313**
11:00 PM	145	14	0	60	**219**
Midnight	145	10	0	45	**200**
Maximum	145	32	144	149	**385**
JUNE WEEKEND "TOTAL SITE" PARKING ACCUMULATIONS					
6:00 AM	150	2	0	0	**152**
7:00 AM	142	10	0	15	**167**
8:00 AM	126	29	43	44	**242**
9:00 AM	111	29	86	15	**241**
10:00 AM	95	32	86	15	**228**
11:00 AM	95	32	86	7	**220**
Noon	87	32	94	147	**360**
1:00 PM	87	32	94	147	**360**
2:00 PM	95	32	94	49	**270**
3:00 PM	95	32	94	15	**236**
4:00 PM	103	29	94	15	**241**
5:00 PM	111	24	144	44	**323**
6:00 PM	119	19	144	81	**363**
7:00 PM	119	18	144	88	**369**
8:00 PM	126	18	144	103	**391**
9:00 PM	134	18	144	98	**394** *
10:00 PM	150	14	72	88	**324**
11:00 PM	158	14	0	59	**231**
Midnight	158	10	0	44	**212**
Maximum	158	32	144	147	**394**
JULY WEEKEND "TOTAL SITE" PARKING ACCUMULATIONS					
6:00 AM	147	2	0	0	**149**
7:00 AM	140	10	0	15	**165**
8:00 AM	124	29	43	46	**242**
9:00 AM	109	29	86	15	**239**
10:00 AM	93	32	86	15	**226**
11:00 AM	93	32	86	8	**219**
Noon	85	32	94	152	**363**
1:00 PM	85	32	94	152	**363**
2:00 PM	93	32	94	50	**269**
3:00 PM	93	32	94	15	**234**
4:00 PM	101	29	94	15	**239**
5:00 PM	109	24	144	46	**323**
6:00 PM	116	19	144	84	**363**
7:00 PM	116	18	144	91	**369**
8:00 PM	124	18	144	106	**392**
9:00 PM	132	18	144	102	**396** *
10:00 PM	147	14	72	91	**324**
11:00 PM	155	14	0	61	**230**
Midnight	155	10	0	46	**211**
Maximum	155	32	144	152	**396**
AUGUST WEEKEND "TOTAL SITE" PARKING ACCUMULATIONS					
6:00 AM	138	2	0	0	**140**
7:00 AM	131	10	0	15	**156**
8:00 AM	116	29	43	46	**234**
9:00 AM	102	29	86	15	**232**
10:00 AM	87	32	86	15	**220**
11:00 AM	87	32	86	8	**213**
Noon	80	32	94	153	**359**
1:00 PM	80	32	94	153	**359**
2:00 PM	87	32	94	50	**263**
3:00 PM	87	32	94	15	**228**
4:00 PM	94	29	94	15	**232**
5:00 PM	102	24	144	46	**316**
6:00 PM	109	19	144	84	**356**
7:00 PM	109	18	144	92	**363**
8:00 PM	116	18	144	107	**385**
9:00 PM	123	18	144	103	**388** *
10:00 PM	138	14	72	92	**316**
11:00 PM	145	14	0	61	**220**
Midnight	145	10	0	46	**201**
Maximum	145	32	144	153	**388**

The Jeff Hotel Project
Weekend Parking Demand

TIME OF DAY	HOTEL		HOTEL		TOTAL PARKING DEMAND
	HOTEL GUEST	HOTEL EMPLOYEE	MEETING ROOM CUSTOMER	RESTAURANT CUSTOMER	
SEPTEMBER WEEKEND "TOTAL SITE" PARKING ACCUMULATIONS					
6:00 AM	140	2	0	0	**142**
7:00 AM	132	10	0	14	**156**
8:00 AM	118	29	43	42	**232**
9:00 AM	103	29	86	14	**232**
10:00 AM	88	32	86	14	**220**
11:00 AM	88	32	86	7	**213**
Noon	81	32	94	141	**348**
1:00 PM	81	32	94	141	**348**
2:00 PM	88	32	94	47	**261**
3:00 PM	88	32	94	14	**228**
4:00 PM	96	29	94	14	**233**
5:00 PM	103	24	144	42	**313**
6:00 PM	110	19	144	78	**351**
7:00 PM	110	18	144	85	**357**
8:00 PM	118	18	144	99	**379**
9:00 PM	125	18	144	94	**381** *
10:00 PM	140	14	72	85	**311**
11:00 PM	147	14	0	56	**217**
Midnight	147	10	0	42	**199**
Maximum	147	32	144	141	**381**
OCTOBER WEEKEND "TOTAL SITE" PARKING ACCUMULATIONS					
6:00 AM	140	2	0	0	**142**
7:00 AM	132	10	0	15	**157**
8:00 AM	118	29	43	45	**235**
9:00 AM	103	29	86	15	**233**
10:00 AM	88	32	86	15	**221**
11:00 AM	88	32	86	7	**213**
Noon	81	32	94	149	**356**
1:00 PM	81	32	94	149	**356**
2:00 PM	88	32	94	49	**263**
3:00 PM	88	32	94	15	**229**
4:00 PM	96	29	94	15	**234**
5:00 PM	103	24	144	45	**316**
6:00 PM	110	19	144	82	**355**
7:00 PM	110	18	144	89	**361**
8:00 PM	118	18	144	104	**384**
9:00 PM	125	18	144	100	**387** *
10:00 PM	140	14	72	89	**315**
11:00 PM	147	14	0	60	**221**
Midnight	147	10	0	45	**202**
Maximum	147	32	144	149	**387**
NOVEMBER WEEKEND "TOTAL SITE" PARKING ACCUMULATIONS					
6:00 AM	122	2	0	0	**124**
7:00 AM	115	10	0	14	**139**
8:00 AM	102	29	43	43	**217**
9:00 AM	90	29	86	14	**219**
10:00 AM	77	32	86	14	**209**
11:00 AM	77	32	86	7	**202**
Noon	70	32	94	144	**340**
1:00 PM	70	32	94	144	**340**
2:00 PM	77	32	94	48	**251**
3:00 PM	77	32	94	14	**217**
4:00 PM	83	29	94	14	**220**
5:00 PM	90	24	144	43	**301**
6:00 PM	96	19	144	79	**338**
7:00 PM	96	18	144	86	**344**
8:00 PM	102	18	144	101	**365**
9:00 PM	109	18	144	96	**367** *
10:00 PM	122	14	72	86	**294**
11:00 PM	128	14	0	58	**200**
Midnight	128	10	0	43	**181**
Maximum	128	32	144	144	**367**
DECEMBER WEEKEND "TOTAL SITE" PARKING ACCUMULATIONS					
6:00 AM	101	2	0	0	**103**
7:00 AM	95	10	0	16	**121**
8:00 AM	85	29	43	47	**204**
9:00 AM	74	29	86	16	**205**
10:00 AM	64	32	86	16	**198**
11:00 AM	64	32	86	8	**190**
Noon	58	32	94	155	**339**
1:00 PM	58	32	94	155	**339**
2:00 PM	64	32	94	51	**241**
3:00 PM	64	32	94	16	**206**
4:00 PM	69	29	94	16	**208**
5:00 PM	74	24	144	47	**289**
6:00 PM	80	19	144	85	**328**
7:00 PM	80	18	144	93	**335**
8:00 PM	85	18	144	109	**356** *
9:00 PM	90	18	144	104	**356** *
10:00 PM	101	14	72	93	**280**
11:00 PM	106	14	0	62	**182**
Midnight	106	10	0	47	**163**
Maximum	106	32	144	155	**356**

The Jeff Hotel Project
Weekend Parking Demand

TIME OF DAY	HOTEL		MEETING ROOM	RESTAURANT	TOTAL PARKING DEMAND
	HOTEL				
	GUEST	EMPLOYEE	CUSTOMER	CUSTOMER	
LATE DECEMBER WEEKEND "TOTAL SITE" PARKING ACCUMULATIONS					
6:00 AM	75	2	0	0	**77**
7:00 AM	71	10	0	15	**96**
8:00 AM	63	29	43	44	**179**
9:00 AM	55	29	86	15	**185**
10:00 AM	47	32	86	15	**180**
11:00 AM	47	32	86	7	**172**
Noon	43	32	94	147	**316**
1:00 PM	43	32	94	147	**316**
2:00 PM	47	32	94	49	**222**
3:00 PM	47	32	94	15	**188**
4:00 PM	51	29	94	15	**189**
5:00 PM	55	24	144	44	**267**
6:00 PM	59	19	144	81	**303**
7:00 PM	59	18	144	88	**309**
8:00 PM	63	18	144	103	**328** *
9:00 PM	67	18	144	98	**327**
10:00 PM	75	14	72	88	**249**
11:00 PM	79	14	0	59	**152**
Midnight	79	10	0	44	**133**
Maximum	79	32	144	147	**328**

ATTACHMENT C

PROJECT PARKING DEMAND PROFILE – JULY WEEKDAY (MAXIMUM) BASED ON CITY OF CULVER CITY MUNICIPAL CODE PARKING RATIOS

The Jeff Hotel Project
Shared Parking Demand (based on Municipal Code Rates)
July - Weekday Maximum

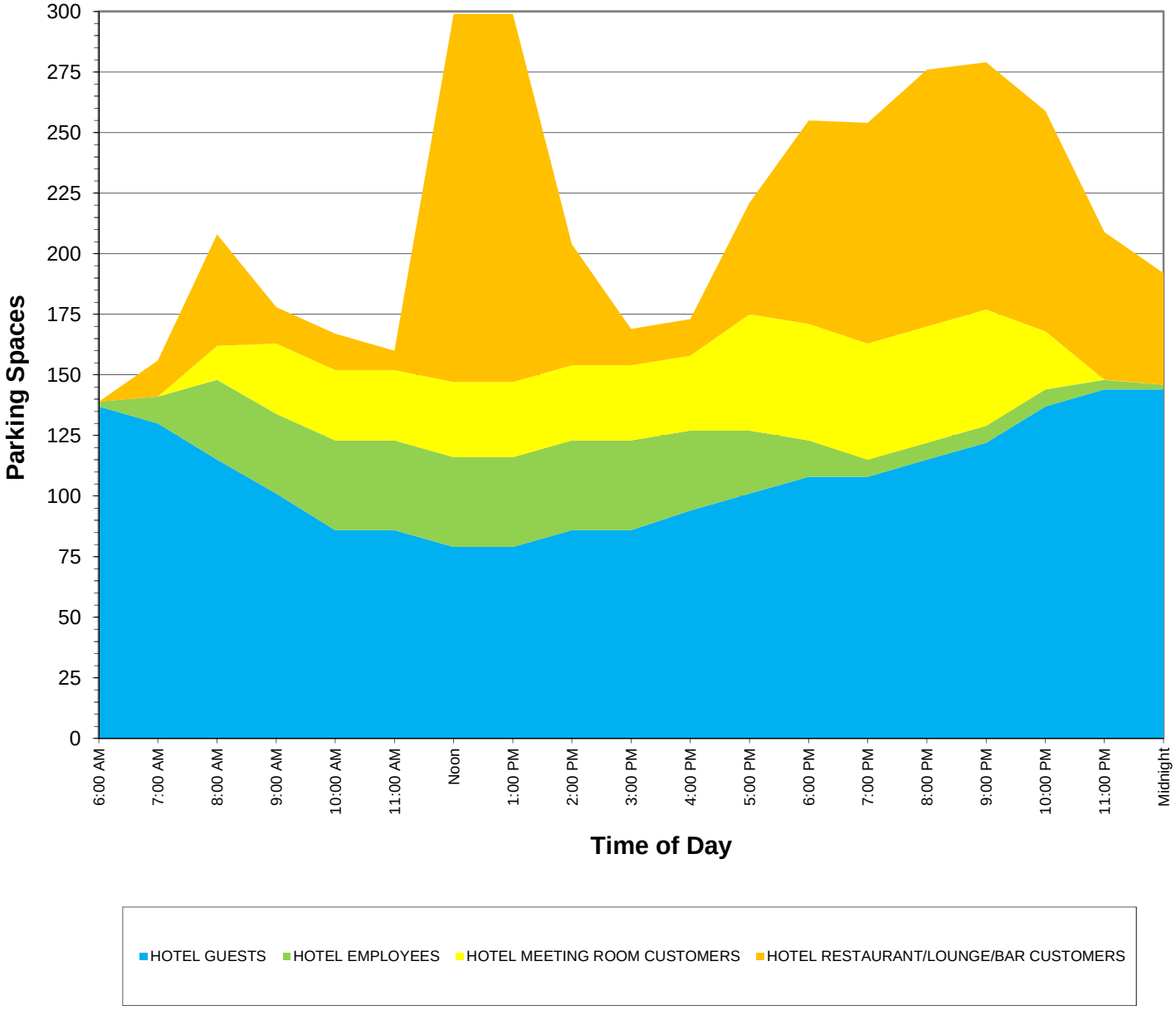

ATTACHMENT D

PROJECT PARKING DEMAND PROFILE – JULY WEEKEND (MAXIMUM) BASED ON CITY OF CULVER CITY MUNICIPAL CODE PARKING RATIOS

The Jeff Hotel Project
Shared Parking Demand (based on Municipal Code Rates)
July - Weekend Maximum

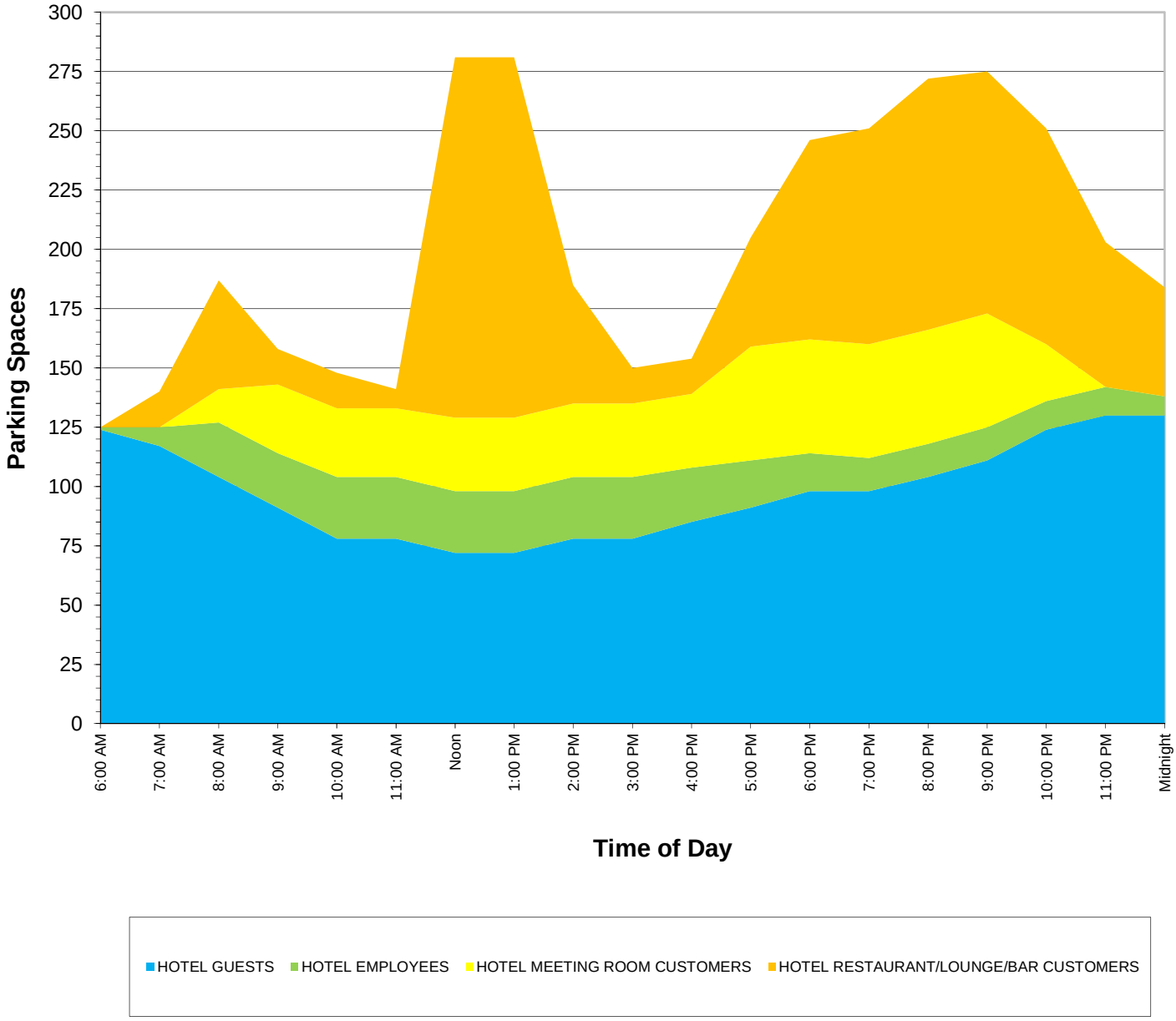

ATTACHMENT E

PROJECT PARKING DEMAND PROFILE – JULY WEEKDAY (MAXIMUM) BASED ON ULI *SHARED PARKING* RECOMMENDED PARKING RATIOS

The Jeff Hotel Project
Shared Parking Demand (based on ULI *Shared Parking* Rates)
July - Weekday Maximum

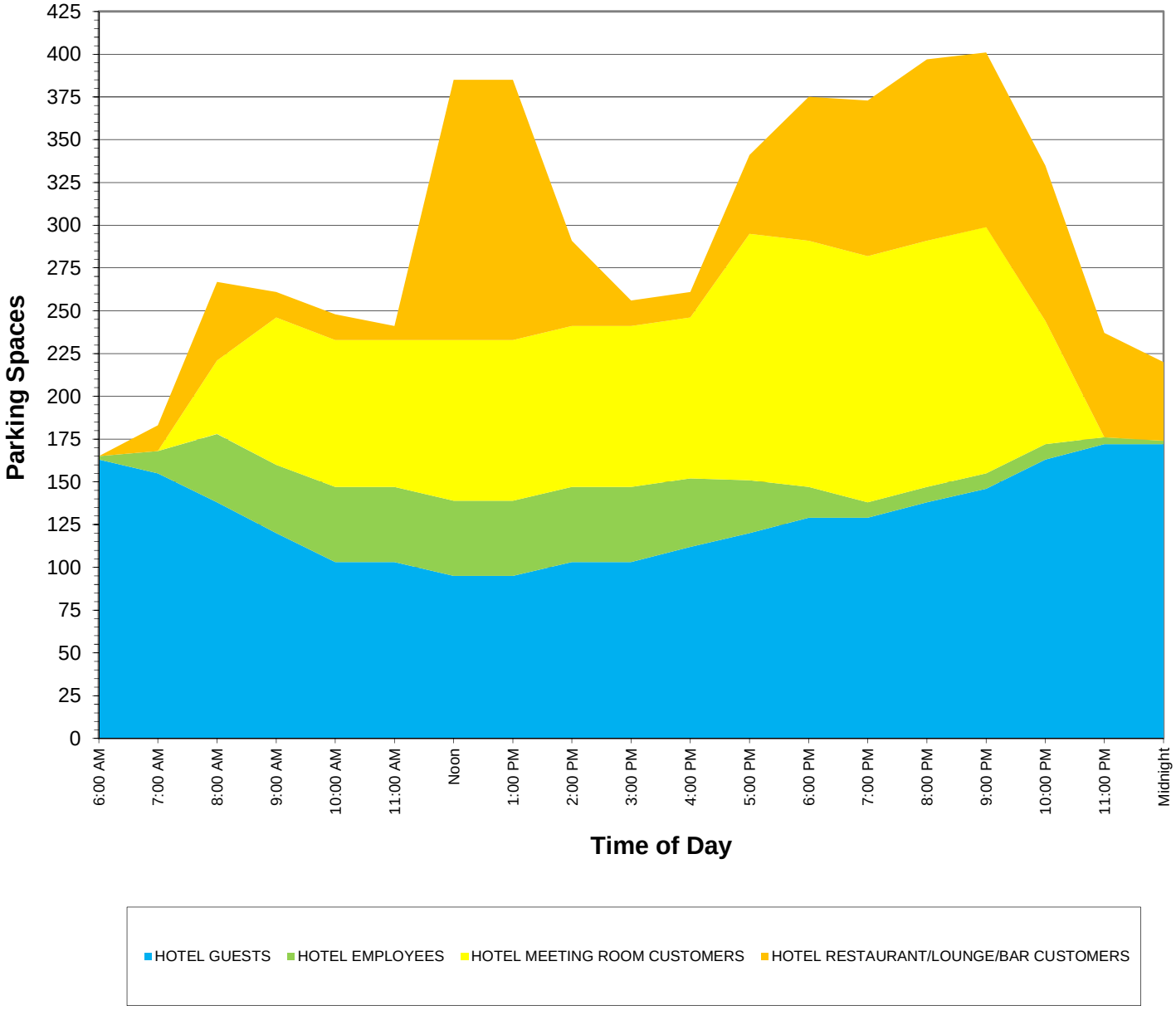

ATTACHMENT F

PROJECT PARKING DEMAND PROFILE – JULY WEEKEND (MAXIMUM) BASED ON ULI *SHARED PARKING* RECOMMENDED PARKING RATIOS

The Jeff Hotel Project
Shared Parking Demand (based on ULI *Shared Parking* Rates)
July - Weekend Maximum

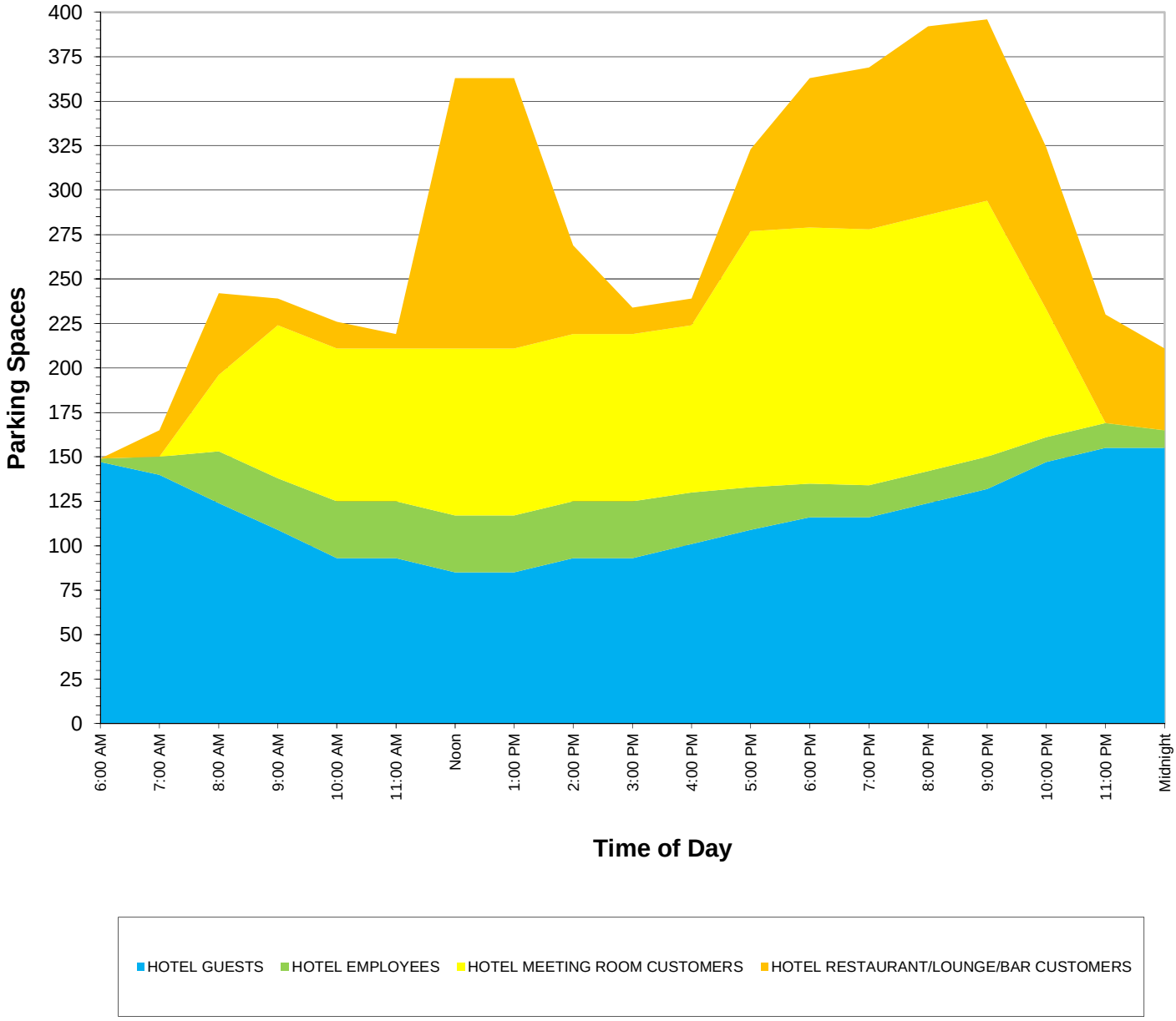

ATTACHMENT G

SURVEYED LOCAL HOTELS
EMPIRICAL HOTEL PARKING DEMAND DATA ANALYSIS
(PEAK MONTH CONDITIONS)

DoubleTree by Hilton Hotel & Conference Center
Empirical Parking Demand Data Analysis - Peak Month Conditions

	Total Parking Demand (factored to Peak Month conditions)																	
Date	6:00 AM	7:00 AM	8:00 AM	9:00 AM	10:00 AM	11:00 AM	12:00 PM	1:00 PM	2:00 PM	3:00 PM	4:00 PM	5:00 PM	6:00 PM	7:00 PM	8:00 PM	9:00 PM	10:00 PM	11:00 PM	12:00 AM
6/5/2018	--	203	191	249	267	279	296	290	285	185	160	149	145	158	--	--	--	--	--
6/6/2018	--	148	133	144	134	138	148	160	151	157	165	166	164	143	--	--	--	--	--
6/7/2018	--	229	251	244	254	252	252	259	247	235	223	227	213	219	--	--	--	--	--
6/8/2018	--	245	207	200	184	124	127	144	149	158	197	216	222	212	--	--	--	--	--
6/9/2018	--	253	267	271	258	254	218	205	196	197	281	254	242	248	--	--	--	--	--
6/10/2018	--	252	251	253	253	272	261	271	252	201	194	137	118	147	--	--	--	--	--
6/11/2018	--	226	220	226	205	205	168	178	159	222	157	184	185	175	--	--	--	--	--
6/12/2018	--	218	226	218	203	214	228	249	223	196	192	186	175	196	--	--	--	--	--
6/13/2018	--	211	200	195	148	129	123	113	98	103	154	143	141	143	--	--	--	--	--
6/14/2018	--	191	157	145	110	97	94	89	96	97	119	125	153	200	--	--	--	--	--
6/15/2018	--	230	255	259	233	225	222	211	193	181	180	175	172	168	--	--	--	--	--
6/16/2018	--	245	241	212	237	199	195	169	192	164	161	162	163	189	--	--	--	--	--
6/17/2018	--	239	223	226	221	239	143	124	106	113	112	107	105	97	--	--	--	--	--
6/18/2018	--	137	144	160	171	122	116	118	102	109	138	142	141	142	--	--	--	--	--
7/16/2018	184	180	177	153	173	150	133	140	140	143	131	133	126	119	151	157	161	169	185
7/17/2018	178	156	132	164	177	216	232	270	249	241	223	212	129	128	129	152	154	156	158
7/18/2018	201	199	229	213	197	192	184	143	173	193	171	173	165	126	130	127	130	135	148
7/19/2018	216	212	205	201	196	150	128	97	97	104	159	161	140	133	137	140	143	148	153
7/20/2018	235	226	208	200	164	141	134	141	145	154	148	148	165	168	166	170	183	187	211
7/21/2018	253	244	208	207	199	122	108	87	78	94	152	157	162	177	205	214	260	279	279
7/22/2018	219	201	197	194	177	147	137	108	88	78	88	83	86	86	92	92	105	115	117
7/23/2018	192	182	165	208	190	165	121	96	150	141	147	122	117	91	130	150	160	169	176
7/24/2018	192	189	191	178	237	191	173	166	163	196	152	156	159	131	133	158	156	156	155
7/25/2018	227	224	212	224	252	202	198	180	197	192	183	186	177	141	143	130	129	154	165
7/26/2018	229	213	229	259	223	207	215	202	201	180	191	182	169	122	139	179	180	180	185
7/27/2018	236	234	248	242	253	222	216	162	134	116	144	147	160	172	171	155	147	156	186
7/28/2018	187	170	161	172	188	193	179	159	130	118	142	148	164	169	187	198	186	198	209
7/29/2018	187	256	242	219	214	201	187	135	144	139	164	134	119	118	138	141	151	155	174
7/30/2018	258	253	233	226	228	145	207	165	122	116	124	127	128	144	150	155	160	164	171
WEEKDAY MAX.	**258**	**253**	**255**	**259**	**267**	**279**	**296**	**290**	**285**	**241**	**223**	**227**	**222**	**219**	**171**	**179**	**183**	**187**	**211**
WEEKEND MAX.	**253**	**256**	**267**	**271**	**258**	**272**	**261**	**271**	**252**	**201**	**281**	**254**	**242**	**248**	**205**	**214**	**260**	**279**	**279**

Courtyard by Marriott
Empirical Parking Demand Data Analysis - Peak Month Conditions

	Total Parking Demand (factored to Peak Month conditions)																						
Date	12:00 AM	1:00 AM	2:00 AM	3:00 AM	4:00 AM	5:00 AM	6:00 AM	7:00 AM	8:00 AM	9:00 AM	10:00 AM	11:00 AM	12:00 PM	1:00 PM	2:00 PM	3:00 PM	4:00 PM	5:00 PM	6:00 PM	7:00 PM	8:00 PM	9:00 PM	10:00 PM	11:00 PM
9/16/2019	94	98	96	97	97	100	103	96	85	74	57	52	38	34	27	26	40	40	47	49	52	66	83	86
9/17/2019	87	91	89	90	90	92	92	85	77	75	71	69	59	60	63	72	66	62	46	48	51	54	67	73
9/18/2019	89	84	85	84	84	86	90	85	80	49	41	39	29	26	29	33	32	29	62	139	119	38	57	62
9/19/2019	65	60	61	62	63	67	74	83	112	90	75	69	57	54	55	59	61	53	65	63	71	81	95	115
9/20/2019	114	115	116	116	116	116	124	117	99	86	73	61	49	42	40	45	57	52	48	53	59	82	109	123
9/21/2019	118	114	120	119	120	119	126	123	117	102	90	82	44	29	33	38	48	54	51	62	80	104	114	129
9/22/2019	119	113	111	112	113	118	124	127	118	69	96	75	63	55	48	45	46	46	39	51	59	75	91	97
WEEKDAY MAX.	**114**	**115**	**116**	**116**	**116**	**116**	**124**	**117**	**112**	**90**	**75**	**69**	**59**	**60**	**63**	**72**	**66**	**62**	**65**	**139**	**119**	**82**	**109**	**123**
WEEKEND MAX.	**119**	**114**	**120**	**119**	**120**	**119**	**126**	**127**	**118**	**102**	**96**	**82**	**63**	**55**	**48**	**45**	**48**	**54**	**51**	**62**	**80**	**104**	**114**	**129**

Four Points by Sheraton
Empirical Parking Demand Data Analysis - Peak Month Conditions

	Total Parking Demand (factored to Peak Month conditions)																						
Date	12:00 AM	1:00 AM	2:00 AM	3:00 AM	4:00 AM	5:00 AM	6:00 AM	7:00 AM	8:00 AM	9:00 AM	10:00 AM	11:00 AM	12:00 PM	1:00 PM	2:00 PM	3:00 PM	4:00 PM	5:00 PM	6:00 PM	7:00 PM	8:00 PM	9:00 PM	10:00 PM	11:00 PM
9/16/2019	77	77	76	77	80	80	80	80	77	67	53	51	41	34	33	33	34	41	38	35	45	54	60	58
9/17/2019	60	60	60	59	60	62	61	58	58	46	55	70	62	27	30	27	29	48	51	43	40	42	56	56
9/18/2019	52	53	52	52	52	53	56	57	90	86	60	56	54	47	49	53	48	43	39	31	33	46	60	58
9/19/2019	56	58	58	58	58	60	66	84	82	70	89	85	56	39	61	73	71	48	44	47	45	66	71	83
9/20/2019	89	88	89	90	90	89	92	92	91	80	68	55	42	40	33	37	34	34	31	30	31	43	55	61
9/21/2019	67	69	65	66	68	67	69	70	63	58	48	57	70	72	74	78	71	41	23	32	30	38	33	39
9/22/2019	33	33	33	34	38	38	40	44	45	42	43	49	43	28	28	30	32	27	27	28	27	31	28	25
WEEKDAY MAX.	**89**	**88**	**89**	**90**	**90**	**89**	**92**	**92**	**91**	**86**	**89**	**85**	**62**	**47**	**61**	**73**	**71**	**48**	**51**	**47**	**45**	**66**	**71**	**83**
WEEKEND MAX.	**67**	**69**	**65**	**66**	**68**	**67**	**69**	**70**	**63**	**58**	**48**	**57**	**70**	**72**	**74**	**78**	**71**	**41**	**27**	**32**	**30**	**38**	**33**	**39**

ATTACHMENT H

SURVEYED LOCAL HOTEL
EMPIRICAL PARKING DEMAND RATIO DEVELOPMENT
(PEAK MONTH CONDITIONS)

Surveyed Local Hotels (DoubleTree, Courtyard, and Four Points)
Empirical Parking Demand Ratio Development - Peak Month Conditions

DoubleTree by Hilton

	Total Parking Demand (factored to Peak Month conditions)																						
HOUR	12:00 AM	1:00 AM	2:00 AM	3:00 AM	4:00 AM	5:00 AM	6:00 AM	7:00 AM	8:00 AM	9:00 AM	10:00 AM	11:00 AM	12:00 PM	1:00 PM	2:00 PM	3:00 PM	4:00 PM	5:00 PM	6:00 PM	7:00 PM	8:00 PM	9:00 PM	10:00 PM	11:00 PM
WEEKDAY MAXIMUM	211	--	--	--	--	--	258	253	255	259	267	279	296	290	285	241	223	227	222	219	171	179	183	187
WEEKDAY PARKING DEMAND RATIO[1] (SPACES PER GUEST ROOM)	**0.563**	**--**	**--**	**--**	**--**	**--**	**0.688**	**0.675**	**0.680**	**0.691**	**0.712**	**0.744**	**0.789**	**0.773**	**0.760**	**0.643**	**0.595**	**0.605**	**0.592**	**0.584**	**0.456**	**0.477**	**0.488**	**0.499**
WEEKEND MAXIMUM	279	--	--	--	--	--	253	256	267	271	258	272	261	271	252	201	281	254	242	248	205	214	260	279
WEEKEND PARKING DEMAND RATIO[1] (SPACES PER GUEST ROOM)	**0.744**	**--**	**--**	**--**	**--**	**--**	**0.675**	**0.683**	**0.712**	**0.723**	**0.688**	**0.725**	**0.696**	**0.723**	**0.672**	**0.536**	**0.749**	**0.677**	**0.645**	**0.661**	**0.547**	**0.571**	**0.693**	**0.744**

Courtyard by Marriott

	Total Parking Demand (factored to Peak Month conditions)																						
HOUR	12:00 AM	1:00 AM	2:00 AM	3:00 AM	4:00 AM	5:00 AM	6:00 AM	7:00 AM	8:00 AM	9:00 AM	10:00 AM	11:00 AM	12:00 PM	1:00 PM	2:00 PM	3:00 PM	4:00 PM	5:00 PM	6:00 PM	7:00 PM	8:00 PM	9:00 PM	10:00 PM	11:00 PM
WEEKDAY MAXIMUM	114	115	116	116	116	116	124	117	112	90	75	69	59	60	63	72	66	62	65	139	119	82	109	123
WEEKDAY PARKING DEMAND RATIO[2] (SPACES PER GUEST ROOM)	**0.438**	**0.442**	**0.446**	**0.446**	**0.446**	**0.446**	**0.477**	**0.450**	**0.431**	**0.346**	**0.288**	**0.265**	**0.227**	**0.231**	**0.242**	**0.277**	**0.254**	**0.238**	**0.250**	**0.535**	**0.458**	**0.315**	**0.419**	**0.473**
WEEKEND MAXIMUM	119	114	120	119	120	119	126	127	118	102	96	82	63	55	48	45	48	54	51	62	80	104	114	129
WEEKEND PARKING DEMAND RATIO[2] (SPACES PER GUEST ROOM)	**0.458**	**0.438**	**0.462**	**0.458**	**0.462**	**0.458**	**0.485**	**0.488**	**0.454**	**0.392**	**0.369**	**0.315**	**0.242**	**0.212**	**0.185**	**0.173**	**0.185**	**0.208**	**0.196**	**0.238**	**0.308**	**0.400**	**0.438**	**0.496**

Four Points by Sheraton

	Total Parking Demand (factored to Peak Month conditions)																						
HOUR	12:00 AM	1:00 AM	2:00 AM	3:00 AM	4:00 AM	5:00 AM	6:00 AM	7:00 AM	8:00 AM	9:00 AM	10:00 AM	11:00 AM	12:00 PM	1:00 PM	2:00 PM	3:00 PM	4:00 PM	5:00 PM	6:00 PM	7:00 PM	8:00 PM	9:00 PM	10:00 PM	11:00 PM
WEEKDAY MAXIMUM	89	88	89	90	90	89	92	92	91	86	89	85	62	47	61	73	71	48	51	47	45	66	71	83
WEEKDAY PARKING DEMAND RATIO[3] (SPACES PER GUEST ROOM)	**0.454**	**0.449**	**0.454**	**0.459**	**0.459**	**0.454**	**0.469**	**0.469**	**0.464**	**0.439**	**0.454**	**0.434**	**0.316**	**0.240**	**0.311**	**0.372**	**0.362**	**0.245**	**0.260**	**0.240**	**0.230**	**0.337**	**0.362**	**0.423**
WEEKEND MAXIMUM	67	69	65	66	68	67	69	70	63	58	48	57	70	72	74	78	71	41	27	32	30	38	33	39
WEEKEND PARKING DEMAND RATIO[3] (SPACES PER GUEST ROOM)	**0.342**	**0.352**	**0.332**	**0.337**	**0.347**	**0.342**	**0.352**	**0.357**	**0.321**	**0.296**	**0.245**	**0.291**	**0.357**	**0.367**	**0.378**	**0.398**	**0.362**	**0.209**	**0.138**	**0.163**	**0.153**	**0.194**	**0.168**	**0.199**

Notes:

[1] Parking demand rate based on number of guest rooms at the DoubleTree by Hilton (375 rooms).

[2] Parking demand rate based on number of guest rooms at the Courtyard by Marriott (260 rooms).

[3] Parking demand rate based on number of guest rooms at the Four Points by Sheraton (196 rooms).

ATTACHMENT I

PROJECT EMPIRICAL PARKING DEMAND ESTIMATES (PEAK MONTH CONDITIONS)

Project Empirical Parking Demand Estimates - Peak Month Conditions

	Total Parking Demand (factored to Peak Month conditions)																	
HOUR	6:00 AM	7:00 AM	8:00 AM	9:00 AM	10:00 AM	11:00 AM	12:00 PM	1:00 PM	2:00 PM	3:00 PM	4:00 PM	5:00 PM	6:00 PM	7:00 PM	8:00 PM	9:00 PM	10:00 PM	11:00 PM	12:00 AM
Weekday	120	118	119	121	125	130	**138**	135	133	113	104	106	104	102	80	83	85	87	99
Weekend	118	120	125	127	120	127	122	127	118	94	**131**	118	113	116	96	100	121	130	130

Notes:

The peak parking demand of the Project would occur at 12:00 PM on a weekday, with a demand of 138 occupied parking spaces.

APPENDIX F

CONCEPTUAL STRIPING PLAN

SLAUSON AVENUE AND JEFFERSON BOULEVARD

(IN VICINITY OF PROJECT SITE)

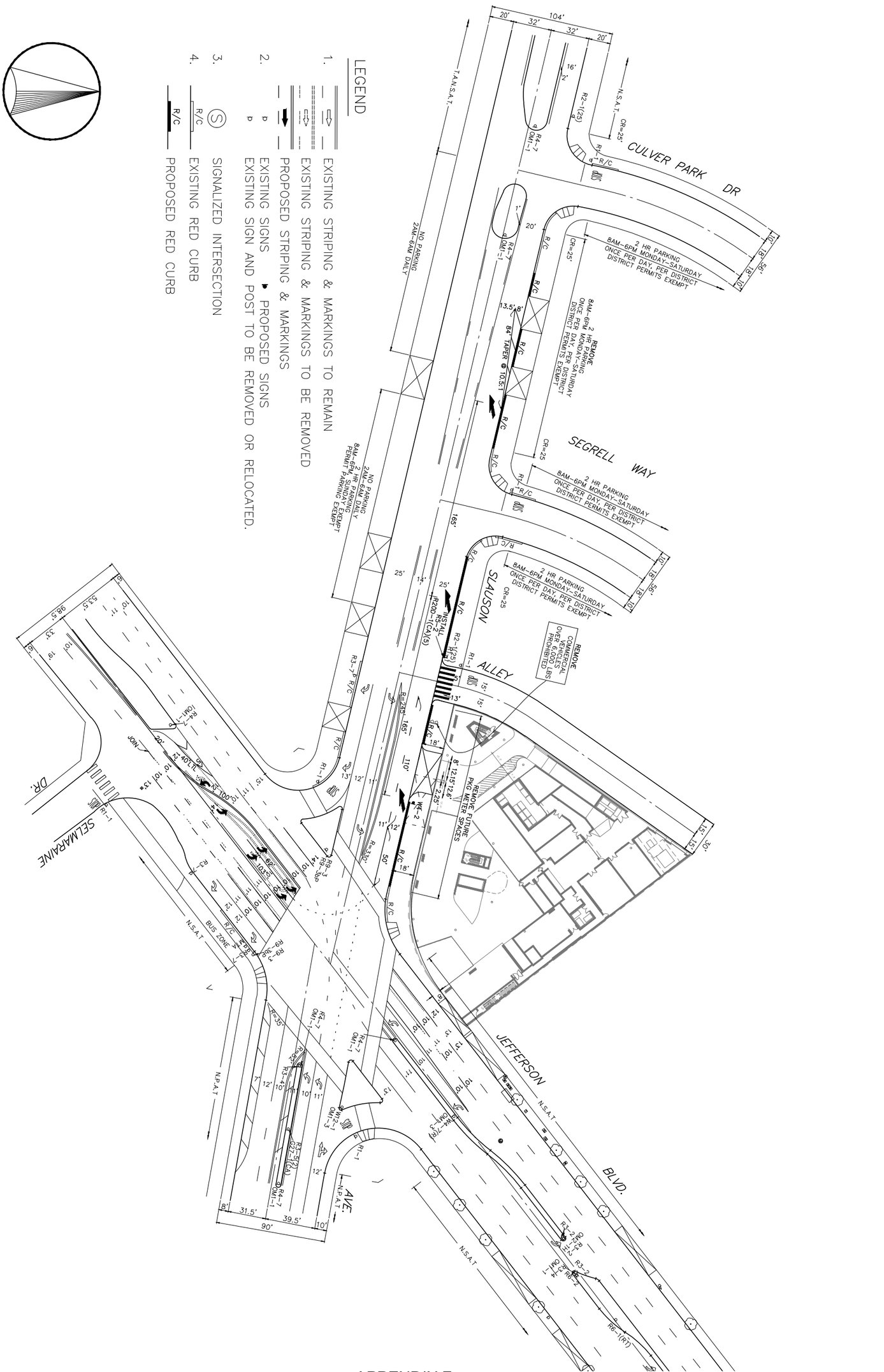

APPENDIX F

11/21/2019

FN: JeffersonHotelCulverCity\STRPConceptual\STRP-Jefferson20191106

THE JEFF HOTEL
CONCEPTUAL STRIPING PLAN
SLAUSON AVENUE AND JEFFERSON BOULEVARD

CRAIN & ASSOCIATES
Transportation Planning
Traffic Engineering
300 Corporate Pointe, Suite 470
Culver City, California 90230
PH (310) 473 6508 F (310) 444 9771
www.crainandassociates.com

APPENDIX G

PROJECT LOADING AREA TRUCK TURN ANALYSIS

(WB-50 DESIGN VEHICLE)

INBOUND


ALLEY
R1-1
R2-1(25)
20'
24'
12'-6"
12'-6"
5'-0"
5'-0"
5'-0

APPENDIX H

WASTE MANAGEMENT PLAN

PROJECT SUMMARY - THE JEFFERSON HOTEL

Waste Volume Estimation

Area	Location	Units	SqFt	Waste Generation Factor	Cubic Yards per Week - Trash	Cubic Yards per Week - Recycle	Cubic Yards per Week - Organics	Diversion Rate
Hotel	Guest Rooms	175		.2 CY/unit	12.3	22.8	0.1	
Hotel	Restaurant		1,900	.00795 CY/SqFt	5.3	6.5	1.9	
Hotel	Rooftop Bar		250	.006 CY/SqFt	0.7	0.9	0.0	
Hotel	Meeting Room A		1,800	.00033 CY/SqFt	0.3	0.3	0.0	
Hotel	Meeting Room B		1,200	.00033 CY/SqFt	0.2	0.2	0.0	
Hotel	Meeting Room C		1,800	.00033 CY/SqFt	0.3	0.3	0.0	
Hotel	Lounge		1,800	.00622 CY/SqFt	5.0	6.2	0.0	
Hotel	Lobby		5,500	.00032 CY/SqFt	1.0	0.8	0.0	
Hotel	Fitness		1,000	.0013 CY/SqFt	0.6	0.7	0.0	
		Sub Total Hotel			**25.7**	**38.4**	**2.0**	
Back of House	Kitchen		1,000	.00795 CY/SqFt	2.8	3.4	1.2	
Back of House	Misc Service		5,500	.00032 CY/SqFt	1.0	0.8	0.0	
	Sub Total Back of House				**3.8**	**4.2**	**1.2**	
Total					**29.5**	**42.6**	**3.2**	***60.8%***

The volume estimations are based on a blend of the following (3) criteria; (1) tenant type and square footage; (2) Terra Pacific's historical data and (3) various government resource and waste characterization reports

Waste Projections:

	Loose	Compacted
Number of trash bins to be serviced 3x per week	3	1
Number of recycle bins to be serviced 3x per week	5	N/A
Number of organic bins to be serviced 1x per week	1	N/A

Typical 3 cubic yard bin footprint	25 SF
Typical rolloff compactor footprint	209 SF

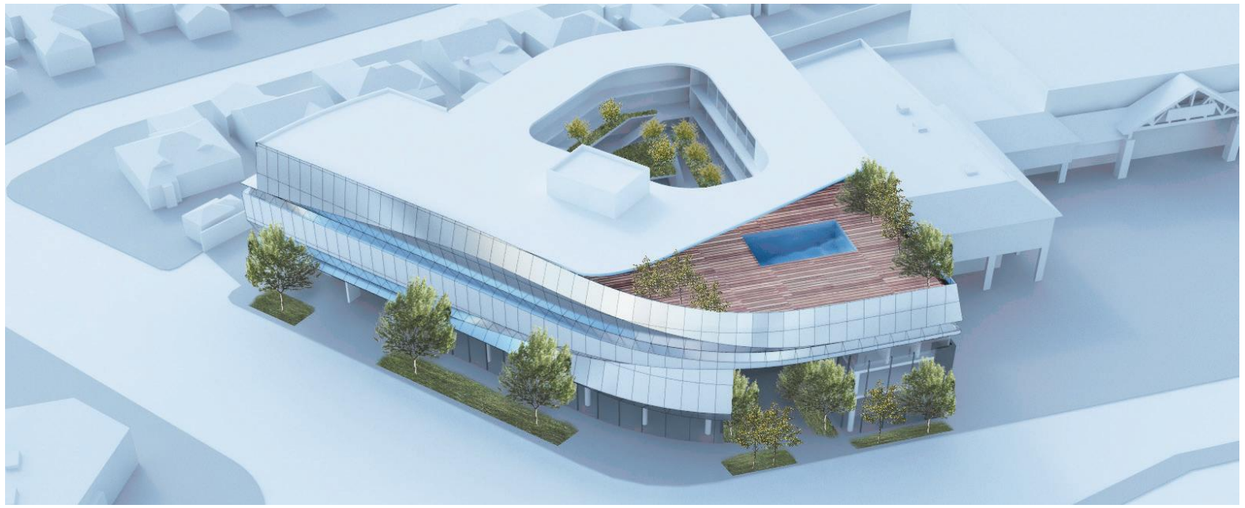

On Site Waste Operations

The proposed project consists of a new five story, 175-room boutique hotel building with ground floor commercial space, and a below grade parking garage. The project is designed to accommodate the hotel rooms and the ground level amenities around a central atrium, the podium level courtyard and additional rooftop amenities.

Tenant Management will utilize a janitorial service to move the waste and recyclable materials to the 1,000 SF trash room located at ground level. At designated times throughout the week, The City of Culver City, EPO, will be scheduled to empty the bins.

Service schedule will be submitted to EPO - Operations for review and approval prior to Final Inspections.

1) Solid waste, recyclable waste material, and organic waste handling shall be performed exclusively by the City or its authorized agents. The City Council may regulate, by ordinance or resolution, all aspects of solid waste, recyclable waste material, and organic waste handling, including, but not limited to, frequency of collection, means of collection and transportation, level of services, charges, fees, and nature, location and extent of providing solid waste handling services.

2) The City of Culver City shall provide waste disposal and recycling services for all construction & demolition projects within city limits in accordance with CCMC 5.01.010.

SITE PLAN

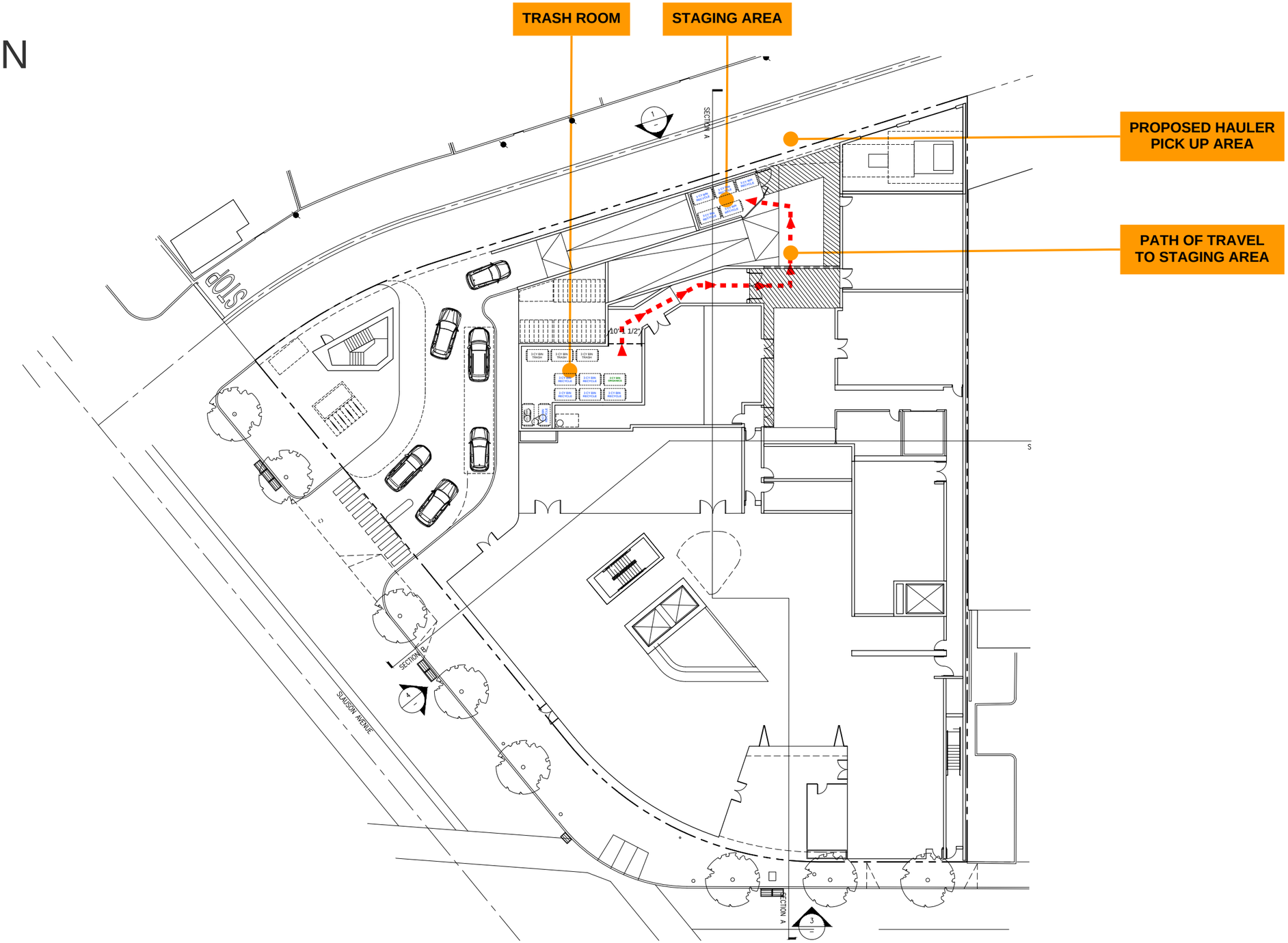

Terra Pacific WASTE MANAGEMENT — DESIGN. BUILD. MANAGE.™ | 2081 business center dr., #230 irvine ca 92612 | 800.765.1308	PROJECT THE JEFFERSON HOTEL 11469 JEFFERSON BLVD | CULVER CITY	DESCRIPTION SITE PLAN - GROUND FLOOR	DATE 9/19/19	SCALE NTS	PAGE 2.0

ENLARGED TRASH ROOM

NOTE:
TRASH ROOM TO PROVIDE 6"x6" CONCRETE CURB & DRAIN INLET CONNECTED TO THE SANITARY SEWER/GREASE INTERCEPTOR

Trash Termination Room

The trash room has a (9) bin capacity. Current volume estimations will require the room to hold (3) trash bins, (5) recycle bins and (1) organics bin.

The room will allow for extra bins, (1) trash & (1) recycle bin, to remain under the chute while the full bins are staged for pick up.

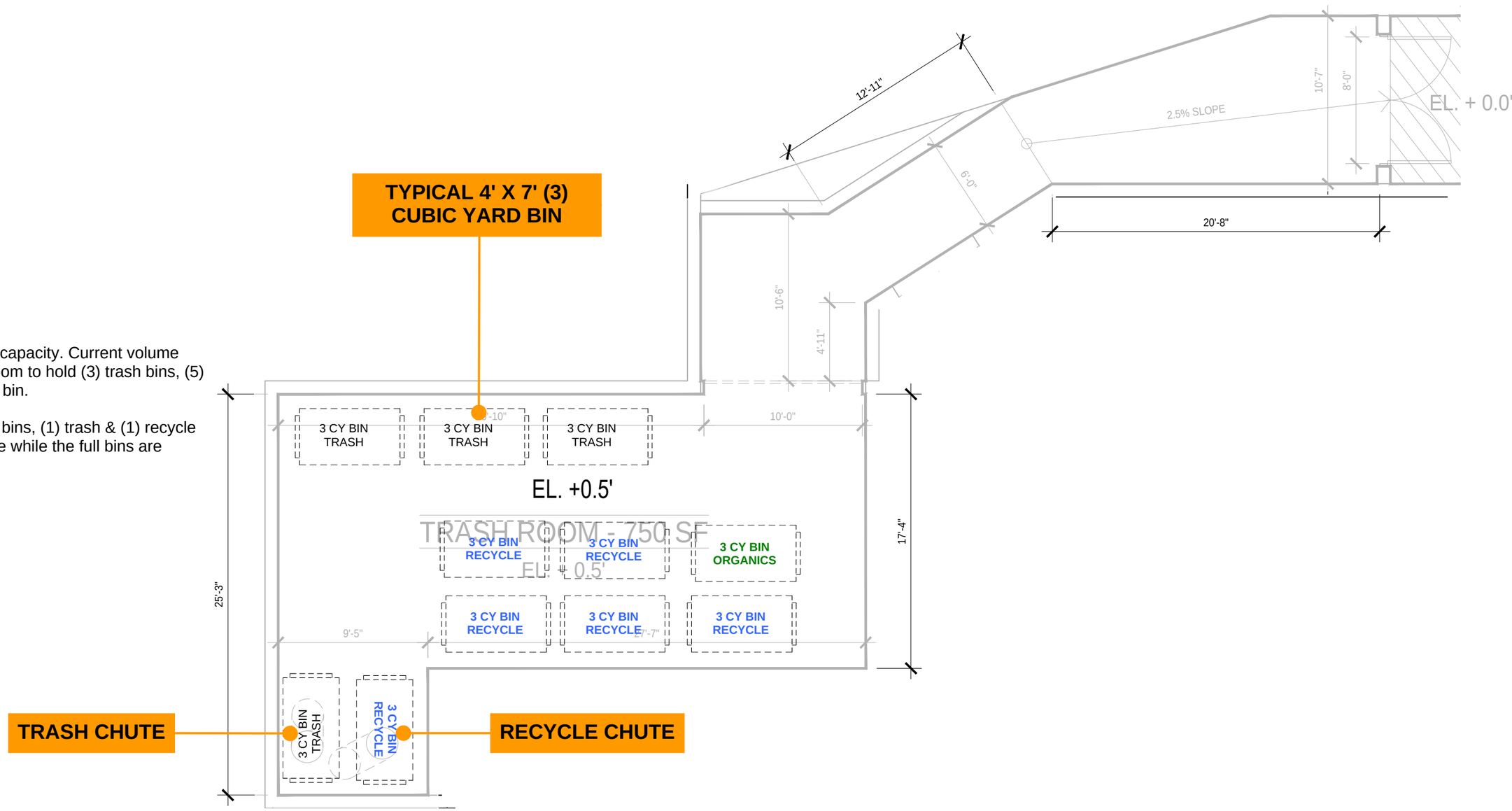

ENLARGED STAGING ROOM

NOTE:
STAGING ROOM TO PROVIDE DRAIN INLET CONNECTED TO THE SANITARY SEWER/GREASE INTERCEPTOR

Staging Room

The staging room has a (5) bin capacity. Current service estimations will are (3) trash bins 3 times per week, (5) recycle bins 3 times a week and (1) organics bin 1 time per week.

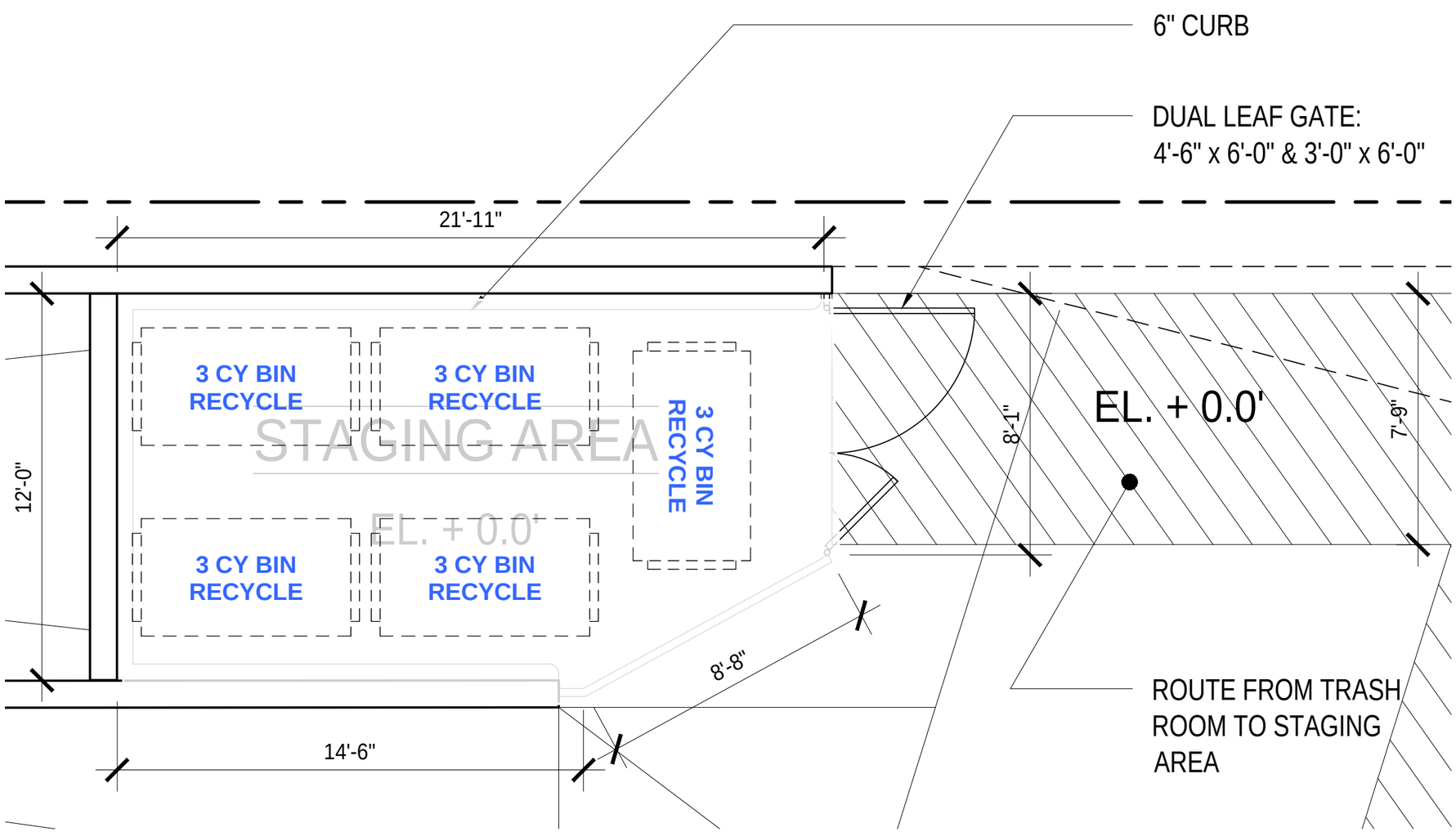

Terra Pacific WASTE MANAGEMENT DESIGN. BUILD. MANAGE.™ 2081 business center dr., #230 irvine ca 92612 | 800.765.1308	PROJECT THE JEFFERSON HOTEL 11469 JEFFERSON BLVD | CULVER CITY	DESCRIPTION ENLARGED STAGING ROOM	DATE 9/19/19	SCALE NTS	PAGE 4.0

APPENDIX I

RELATED PROJECT TRIP GENERATION RATES AND EQUATIONS

Appendix I

Related Projects Trip Generation Rates and Formulas

Multifamily Housing (Low-Rise) (per dwelling unit) – LUC 220

Daily:	T = 7.32 (D)
AM Peak Hour:	T = 0.46 (D); I/B = 23%; O/B = 77%
PM Peak Hour:	T = 0.56 (D); I/B = 63%; O/B = 37%

Multifamily Housing (Mid-Rise) (per dwelling unit) – LUC 221

Daily:	T = 5.44 (D)
AM Peak Hour:	T = 0.36 (D); I/B = 26%, O/B = 74%
PM Peak Hour:	T = 0.44 (D); I/B = 61%, O/B = 39%

Assisted Living (per bed) – LUC 254

Daily:	T = 2.60 (B)
AM Peak Hour:	T = 0.19 (B); I/B = 63%, O/B = 37%
PM Peak Hour:	T = 0.26 (B); I/B = 38%, O/B = 62%

General Office Building (per 1,000 sf) – LUC 710

Daily:	Ln(T) = 0.97 Ln(A) + 2.50
AM Peak Hour:	Ln(T) = 0.94(A) + 26.49; I/B = 86%, O/B = 14%
PM Peak Hour:	Ln(T) = 0.95 Ln(A) + 0.36; I/B = 16%, O/B = 84%

Medical-Dental Office (per 1,000 sf) – LUC 720

Daily:	T = 34.80 (A)
AM Peak Hour:	T = 2.78 (A); I/B = 78%, O/B = 22%
PM Peak Hour:	T = 3.46 (A); I/B = 28%, O/B = 72%

Shopping Center (per 1,000 sf) – LUC 820

Daily:	T = 37.75 (A)
AM Peak Hour:	T = 0.94 (A); I/B = 62%, O/B = 38%
PM Peak Hour:	T = 3.81 (A); I/B = 48%, O/B = 52%

Fast Casual Restaurant (per 1,000 sf) – LUC 930

Daily:	T = 315.17 (A)
AM Peak Hour:	T = 2.07 (A); I/B = 67%, O/B = 33%
PM Peak Hour:	T = 14.13 (A); I/B = 55%, O/B = 45%

High Turnover Restaurant (per 1,000 sf) – LUC 932

Daily:	T = 112.18 (A)
AM Peak Hour:	T = 9.94 (A); I/B = 55%, O/B = 45%
PM Peak Hour:	T = 9.77 (A); I/B = 62%, O/B = 38%

Gas Station with Convenience Market (per 1,000 sf) – LUC 945

Daily:	T = 1440.02 (A)
AM Peak Hour:	T = 75.99 (A); I/B = 51%, O/B = 49%
PM Peak Hour:	T = 88.35 (A); I/B = 51%, O/B = 49%

Sources:

Institute of Transportation Engineers *Trip Generation Manual* (10th Edition, 2017).

APPENDIX J

SYNCHRO CALCULATION WORKSHEETS

Lane Group	EBL	EBT	EBR	WBL	WBT	WBR	NEL	NET	NER	SWL	SWT	SWR
Lane Util. Factor	1.00	1.00	1.00	0.97	1.00	1.00	1.00	0.91	1.00	1.00	0.91	0.91
Ped Bike Factor			0.99		1.00						1.00	
Frt			0.850		0.996				0.850		0.989	
Flt Protected	0.950			0.950			0.950			0.950		
Satd. Flow (prot)	1770	1863	1636	3319	1854	0	1652	4916	1544	1652	4760	0
Flt Permitted	0.950			0.950			0.950			0.950		
Satd. Flow (perm)	1770	1863	1613	3319	1854	0	1652	4916	1544	1652	4760	0
Satd. Flow (RTOR)			138		1				131		10	
Lane Group Flow (vph)	34	129	138	323	269	0	121	962	184	20	938	0
v/c Ratio	0.21	0.53	0.42	0.72	0.66		0.66	0.34	0.57	0.12	0.38	
Control Delay	62.2	64.2	11.9	66.8	58.3		76.3	18.5	24.6	56.0	21.8	
Queue Delay	0.0	0.0	0.0	0.0	0.0		0.0	0.0	0.0	0.0	0.0	
Total Delay	62.2	64.2	11.9	66.8	58.3		76.3	18.5	24.6	56.0	21.8	
Queue Length 50th (ft)	29	110	0	147	236		107	134	44	18	182	
Queue Length 95th (ft)	66	176	60	191	316		170	272	119	41	265	
Internal Link Dist (ft)		279			430			465			435	
Turn Bay Length (ft)	137		135	435			55		70	110		
Base Capacity (vph)	199	401	456	625	544		270	2859	397	176	2487	
Starvation Cap Reductn	0	0	0	0	0		0	0	0	0	0	
Spillback Cap Reductn	0	0	0	0	0		0	0	0	0	0	
Storage Cap Reductn	0	0	0	0	0		0	0	0	0	0	
Reduced v/c Ratio	0.17	0.32	0.30	0.52	0.49		0.45	0.34	0.46	0.11	0.38	

Intersection Summary

Lane Group	EBL	EBT	EBR	WBL	WBT	WBR	NEL	NET	NER	SWL	SWT	SWR
Lane Util. Factor	1.00	1.00	1.00	0.97	1.00	1.00	1.00	0.91	1.00	1.00	0.91	0.91
Ped Bike Factor			0.98		0.99						1.00	
Frt			0.850		0.969				0.850		0.992	
Flt Protected	0.950			0.950			0.950			0.950		
Satd. Flow (prot)	1770	1863	1636	3319	1796	0	1652	4916	1544	1652	4779	0
Flt Permitted	0.950			0.950			0.950			0.950		
Satd. Flow (perm)	1770	1863	1610	3319	1796	0	1652	4916	1544	1652	4779	0
Satd. Flow (RTOR)			222		11				131		6	
Lane Group Flow (vph)	35	236	250	368	157	0	91	1120	322	62	791	0
v/c Ratio	0.10	0.78	0.56	0.62	0.44		0.59	0.47	0.84	0.45	0.36	
Control Delay	40.9	72.7	13.8	56.7	52.8		76.0	27.8	50.9	71.3	27.5	
Queue Delay	0.0	0.0	0.0	0.0	0.0		0.0	0.0	0.0	0.0	0.0	
Total Delay	40.9	72.7	13.8	56.7	52.8		76.0	27.8	50.9	71.3	27.5	
Queue Length 50th (ft)	26	208	22	162	130		81	243	177	55	163	
Queue Length 95th (ft)	50	287	100	194	198		137	384	268	102	267	
Internal Link Dist (ft)		279			430			465			435	
Turn Bay Length (ft)	137		135	435			55		70	110		
Base Capacity (vph)	357	401	521	886	680		202	2419	508	148	2221	
Starvation Cap Reductn	0	0	0	0	0		0	0	0	0	0	
Spillback Cap Reductn	0	0	0	0	0		0	0	0	0	0	
Storage Cap Reductn	0	0	0	0	0		0	0	0	0	0	
Reduced v/c Ratio	0.10	0.59	0.48	0.42	0.23		0.45	0.46	0.63	0.42	0.36	

Intersection Summary

Lane Group	EBL	EBT	EBR	WBL	WBT	WBR	NEL	NET	NER	SWL	SWT	SWR
Lane Util. Factor	1.00	1.00	1.00	0.97	1.00	1.00	1.00	0.91	1.00	1.00	0.91	0.91
Ped Bike Factor			0.99		1.00						1.00	
Frt			0.850		0.996				0.850		0.988	
Flt Protected	0.950			0.950			0.950			0.950		
Satd. Flow (prot)	1770	1863	1636	3319	1854	0	1652	4916	1544	1652	4755	0
Flt Permitted	0.950			0.950			0.950			0.950		
Satd. Flow (perm)	1770	1863	1613	3319	1854	0	1652	4916	1544	1652	4755	0
Satd. Flow (RTOR)			157		1				131		11	
Lane Group Flow (vph)	35	142	157	323	286	0	143	962	184	20	941	0
v/c Ratio	0.21	0.55	0.44	0.72	0.68		0.70	0.34	0.57	0.12	0.39	
Control Delay	62.3	64.3	11.3	66.9	58.6		76.1	19.7	24.7	54.6	23.7	
Queue Delay	0.0	0.0	0.0	0.0	0.0		0.0	0.0	0.0	0.0	0.0	
Total Delay	62.3	64.3	11.3	66.9	58.6		76.1	19.7	24.7	54.6	23.7	
Queue Length 50th (ft)	30	121	0	147	250		127	138	44	18	191	
Queue Length 95th (ft)	67	189	64	191	332		193	284	119	40	279	
Internal Link Dist (ft)		279			430			465			435	
Turn Bay Length (ft)	137		135	435			55		70	110		
Base Capacity (vph)	199	401	471	602	531		293	2835	387	184	2395	
Starvation Cap Reductn	0	0	0	0	0		0	0	0	0	0	
Spillback Cap Reductn	0	0	0	0	0		0	0	0	0	0	
Storage Cap Reductn	0	0	0	0	0		0	0	0	0	0	
Reduced v/c Ratio	0.18	0.35	0.33	0.54	0.54		0.49	0.34	0.48	0.11	0.39	

Intersection Summary

Lane Group	EBL	EBT	EBR	WBL	WBT	WBR	NEL	NET	NER	SWL	SWT	SWR
Lane Util. Factor	1.00	1.00	1.00	0.97	1.00	1.00	1.00	0.91	1.00	1.00	0.91	0.91
Ped Bike Factor			0.98		1.00						1.00	
Frt			0.850		0.972				0.850		0.991	
Flt Protected	0.950			0.950			0.950			0.950		
Satd. Flow (prot)	1770	1863	1636	3319	1802	0	1652	4916	1544	1652	4773	0
Flt Permitted	0.950			0.950			0.950			0.950		
Satd. Flow (perm)	1770	1863	1611	3319	1802	0	1652	4916	1544	1652	4773	0
Satd. Flow (RTOR)			236		10				131		7	
Lane Group Flow (vph)	35	248	276	368	170	0	110	1120	322	61	786	0
v/c Ratio	0.10	0.78	0.59	0.62	0.46		0.65	0.47	0.84	0.44	0.37	
Control Delay	41.2	72.4	14.8	56.7	52.9		77.5	28.5	50.9	70.3	29.0	
Queue Delay	0.0	0.0	0.0	0.0	0.0		0.0	0.0	0.0	0.0	0.0	
Total Delay	41.2	72.4	14.8	56.7	52.9		77.5	28.5	50.9	70.3	29.0	
Queue Length 50th (ft)	26	219	31	162	142		98	250	177	54	167	
Queue Length 95th (ft)	50	298	116	194	212		158	386	268	101	271	
Internal Link Dist (ft)		279			430			465			435	
Turn Bay Length (ft)	137		135	435			55		70	110		
Base Capacity (vph)	354	415	542	886	694		214	2375	508	148	2142	
Starvation Cap Reductn	0	0	0	0	0		0	0	0	0	0	
Spillback Cap Reductn	0	0	0	0	0		0	0	0	0	0	
Storage Cap Reductn	0	0	0	0	0		0	0	0	0	0	
Reduced v/c Ratio	0.10	0.60	0.51	0.42	0.24		0.51	0.47	0.63	0.41	0.37	

Intersection Summary