Priority Development Project (PDP)
Storm Water Quality Management Plan (SWQMP)

Southwest Park

☐ **Check if electing for offsite alternative compliance**

Engineer of Work:

REGISTERED PROFESSIONAL ENGINEER
BRYAN D. SMITH
C 75822
EXP. 06-30-22
CIVIL
STATE OF CALIFORNIA

Bryan D Smith, RCE 75822 Exp. 06/30/22

Provide Wet Signature and Stamp Above Line

Prepared For:

Schmidt Design Group

1310 Rosecrans Street, Suite G

San Diego, CA, 92106

619-236-1462

Prepared By:

FUSCOE ENGINEERING
full circle thinking

Fuscoe Engineering, Inc.

6390 Greenwich Dr. Suite 170

San Diego, CA, 92122

858-554-1500

Date:

06.25.2020

Approved by: City of San Diego Date

The City of SAN DIEGO

THIS PAGE INTENTIONALLY LEFT BLANK FOR DOUBLE-SIDED PRINTING

Project Name: Southwest Park

Table of Contents

- Acronyms
- Certification Page
- Submittal Record
- Project Vicinity Map
- FORM DS-560: Storm Water Applicability Checklist
- FORM I-1: Applicability of Permanent, Post-Construction Storm Water BMP Requirements
- HMP Exemption Exhibit (for all hydromodification management exempt projects)
- FORM I-3B: Site Information Checklist for PDPs
- FORM I-4B: Source Control BMP Checklist for PDPs
- FORM I-5B: Site Design BMP Checklist PDPs
- FORM I-6: Summary of PDP Structural BMPs
- Attachment 1: Backup for PDP Pollutant Control BMPs
    - Attachment 1a: DMA Exhibit
    - Attachment 1b: Tabular Summary of DMAs (Worksheet B-1 from Appendix B) and Design Capture Volume Calculations
    - Attachment 1c: FORM I-7 : Worksheet B.3-1 Harvest and Use Feasibility Screening
    - Attachment 1d: Infiltration Feasibility Information(One or more of the following):
        - FORM I-8A: Worksheet C.4-1 Categorization of Infiltration Feasibility Condition based on Geotechnical Conditions
        - Form I-8B: Worksheet C.4-2 Categorization of Infiltration Feasibility Condition based on Groundwater and Water Balance Conditions
        - Infiltration Feasibility Condition Letter
        - Worksheet C.4-3: Infiltration and Groundwater Protection for Full Infiltration BMPs
        - FORM I-9: Worksheet D.5-1 Factor of Safety and Design Infiltration Rate
    - Attachment 1e: Pollutant Control BMP Design Worksheets / Calculations
- Attachment 2: Backup for PDP Hydromodification Control Measures
    - Attachment 2a: Hydromodification Management Exhibit
    - Attachment 2b: Management of Critical Coarse Sediment Yield Areas
    - Attachment 2c: Geomorphic Assessment of Receiving Channels
    - Attachment 2d: Flow Control Facility Design

- Attachment 3: Structural BMP Maintenance Plan
    - Maintenance Agreement (Form DS-3247) (when applicable)
- Attachment 4: Copy of Plan Sheets Showing Permanent Storm Water BMPs
- Attachment 5: Project's Drainage Report
- Attachment 6: Project's Geotechnical and Groundwater Investigation Report

Acronyms

APN	Assessor's Parcel Number
ASBS	Area of Special Biological Significance
BMP	Best Management Practice
CEQA	California Environmental Quality Act
CGP	Construction General Permit
DCV	Design Capture Volume
DMA	Drainage Management Areas
ESA	Environmentally Sensitive Area
GLU	Geomorphic Landscape Unit
GW	Ground Water
HMP	Hydromodification Management Plan
HSG	Hydrologic Soil Group
HU	Harvest and Use
INF	Infiltration
LID	Low Impact Development
LUP	Linear Underground/Overhead Projects
MS4	Municipal Separate Storm Sewer System
N/A	Not Applicable
NPDES	National Pollutant Discharge Elimination System
NRCS	Natural Resources Conservation Service
PDP	Priority Development Project
PE	Professional Engineer
POC	Pollutant of Concern
SC	Source Control
SD	Site Design
SDRWQCB	San Diego Regional Water Quality Control Board
SIC	Standard Industrial Classification
SWPPP	Stormwater Pollutant Protection Plan
SWQMP	Storm Water Quality Management Plan
TMDL	Total Maximum Daily Load
WMAA	Watershed Management Area Analysis
WPCP	Water Pollution Control Program
WQIP	Water Quality Improvement Plan

Certification Page

Project Name:
Permit Application

I hereby declare that I am the Engineer in Responsible Charge of design of storm water BMPs for this project, and that I have exercised responsible charge over the design of the project as defined in Section 6703 of the Business and Professions Code, and that the design is consistent with the requirements of the Storm Water Standards, which is based on the requirements of SDRWQCB Order No. R9-2013-0001 as amended by R9-2015-0001 and R9-2015-0100 (MS4 Permit).

I have read and understand that the City Engineer has adopted minimum requirements for managing urban runoff, including storm water, from land development activities, as described in the Storm Water Standards. I certify that this PDP SWQMP has been completed to the best of my ability and accurately reflects the project being proposed and the applicable source control and site design BMPs proposed to minimize the potentially negative impacts of this project's land development activities on water quality. I understand and acknowledge that the plan check review of this PDP SWQMP by the City Engineer is confined to a review and does not relieve me, as the Engineer in Responsible Charge of design of storm water BMPs for this project, of my responsibilities for project design.

Engineer of Work's Signature

75822

PE#

06/30/22

Expiration Date

Bryan D. Smith

Print Name

Fuscoe Engineering, Inc.

Company

06/25/2020

Date

Engineer's Stamp

Project Name: Southwest Park

Submittal Record

Use this Table to keep a record of submittals of this PDP SWQMP. Each time the PDP SWQMP is re-submitted, provide the date and status of the project. In last column indicate changes that have been made or indicate if response to plancheck comments is included. When applicable, insert response to plancheck comments.

Submittal Number	Date	Project Status	Changes
1	11/8/2019	☑ Preliminary Design/Planning/CEQA ☐ Final Design	**Initial Submittal**
2	06/25/2020	☑ Preliminary Design/Planning/CEQA ☐ Final Design	Resubmittal
3		☐ Preliminary Design/Planning/CEQA ☐ Final Design	
4		☐ Preliminary Design/Planning/CEQA ☐ Final Design	

Project Vicinity Map

Project Name: Southwest Park
Permit Application

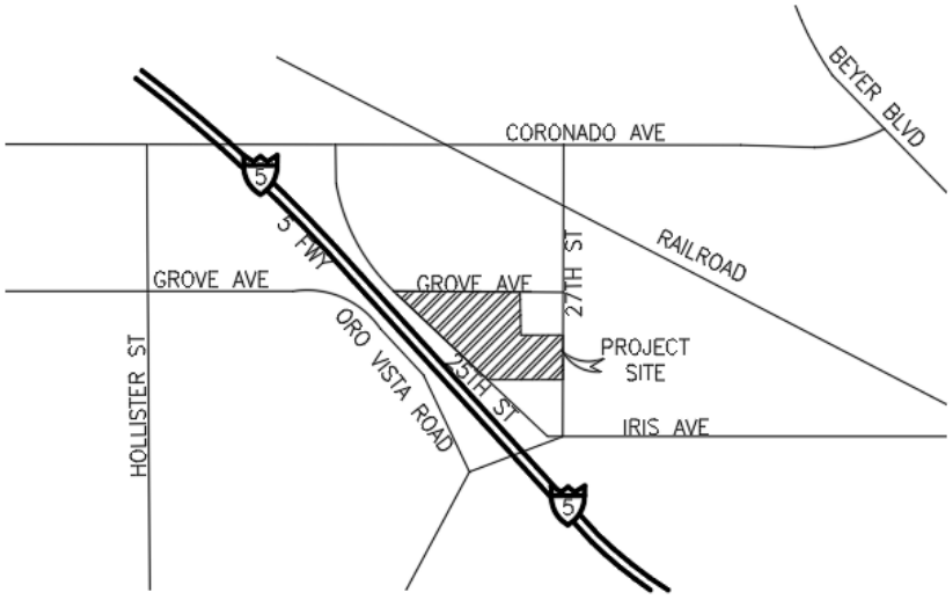

City of San Diego Form DS-560 Storm Water Requirements Applicability Checklist

Attach DS-560 form.

City of San Diego
Development Services
1222 First Ave., MS-302
San Diego, CA 92101
(619) 446-5000

Storm Water Requirements Applicability Checklist

FORM DS-560
November 2018

Project Address: South of Grove St., between 25th St.& 27th St.	Project Number:

SECTION 1. Construction Storm Water BMP Requirements:

All construction sites are required to implement construction BMPs in accordance with the performance standards in the Storm Water Standards Manual. Some sites are additionally required to obtain coverage under the State Construction General Permit (CGP)[1] , which is administered by the State Regional Water Quality Control Board.

For all projects complete PART A: If project is required to submit a SWPPP or WPCP, continue to PART B.

PART A: Determine Construction Phase Storm Water Requirements.

1. Is the project subject to California's statewide General NPDES permit for Storm Water Discharges Associated with Construction Activities, also known as the State Construction General Permit (CGP)? (Typically projects with land disturbance greater than or equal to 1 acre.)

   ☒ Yes; SWPPP required, skip questions 2-4 ☐ No; next question

2. Does the project propose construction or demolition activity, including but not limited to, clearing, grading, grubbing, excavation, or any other activity resulting in ground disturbance and/or contact with storm water?

   ☐ Yes; WPCP required, skip questions 3-4 ☐ No; next question

3. Does the project propose routine maintenance to maintain original line and grade, hydraulic capacity, or original purpose of the facility? (Projects such as pipeline/utility replacement)

   ☐ Yes; WPCP required, skip question 4 ☐ No; next question

4. Does the project only include the following Permit types listed below?

   - Electrical Permit, Fire Alarm Permit, Fire Sprinkler Permit, Plumbing Permit, Sign Permit, Mechanical Permit, Spa Permit.
   - Individual Right of Way Permits that exclusively include only ONE of the following activities: water service, sewer lateral, or utility service.
   - Right of Way Permits with a project footprint less than 150 linear feet that exclusively include only ONE of the following activities: curb ramp, sidewalk and driveway apron replacement, pot holing, curb and gutter replacement, and retaining wall encroachments.

   ☐ Yes; no document required

Check one of the boxes below, and continue to PART B:

☒ If you checked "Yes" for question 1, **a SWPPP is REQUIRED. Continue to PART B**

☐ If you checked "No" for question 1, and checked "Yes" for question 2 or 3, **a WPCP is REQUIRED.** If the project proposes less than 5,000 square feet of ground disturbance AND has less than a 5-foot elevation change over the entire project area, a Minor WPCP may be required instead. **Continue to PART B.**

☐ If you checked "No" for all questions 1-3, and checked "Yes" for question 4 PART B **does not apply and no document is required. Continue to Section 2.**

1. More information on the City's construction BMP requirements as well as CGP requirements can be found at: www.sandiego.gov/stormwater/regulations/index.shtml

PART B: Determine Construction Site Priority

This prioritization must be completed within this form, noted on the plans, and included in the SWPPP or WPCP. The city reserves the right to adjust the priority of projects both before and after construction. Construction projects are assigned an inspection frequency based on if the project has a "high threat to water quality." The City has aligned the local definition of "high threat to water quality" to the risk determination approach of the State Construction General Permit (CGP). The CGP determines risk level based on project specific sediment risk and receiving water risk. Additional inspection is required for projects within the Areas of Special Biological Significance (ASBS) watershed. **NOTE:** The construction priority does **NOT** change construction BMP requirements that apply to projects; rather, it determines the frequency of inspections that will be conducted by city staff.

Complete PART B and continued to Section 2

1. ☐ **ASBS**
   a. Projects located in the ASBS watershed.

2. ☒ **High Priority**
   a. Projects that qualify as Risk Level 2 or Risk Level 3 per the Construction General Permit (CGP) and not located in the ASBS watershed.
   b. Projects that qualify as LUP Type 2 or LUP Type 3 per the CGP and not located in the ASBS watershed.

3. ☐ **Medium Priority**
   a. Projects that are not located in an ASBS watershed or designated as a High priority site.
   b. Projects that qualify as Risk Level 1 or LUP Type 1 per the CGP and not located in an ASBS watershed.
   c. WPCP projects (>5,000sf of ground disturbance) located within the Los Penasquitos watershed management area.

4. ☐ **Low Priority**
   a. Projects not subject to a Medium or High site priority designation and are not located in an ASBS watershed.

SECTION 2. Permanent Storm Water BMP Requirements.

Additional information for determining the requirements is found in the Storm Water Standards Manual.

PART C: Determine if Not Subject to Permanent Storm Water Requirements.

Projects that are considered maintenance, or otherwise not categorized as "new development projects" or "redevelopment projects" according to the Storm Water Standards Manual are not subject to Permanent Storm Water BMPs.

If "yes" is checked for any number in Part C, proceed to Part F and check "Not Subject to Permanent Storm Water BMP Requirements".

If "no" is checked for all of the numbers in Part C continue to Part D.

1.	Does the project only include interior remodels and/or is the project entirely within an existing enclosed structure and does not have the potential to contact storm water?	☐ Yes	☒ No
2.	Does the project only include the construction of overhead or underground utilities without creating new impervious surfaces?	☐ Yes	☒ No
3.	Does the project fall under routine maintenance? Examples include, but are not limited to: roof or exterior structure surface replacement, resurfacing or reconfiguring surface parking lots or existing roadways without expanding the impervious footprint, and routine replacement of damaged pavement (grinding, overlay, and pothole repair).	☐ Yes	☒ No

Clear Page 2

PART D: PDP Exempt Requirements.

PDP Exempt projects are required to implement site design and source control BMPs.

If "yes" was checked for any questions in Part D, continue to Part F and check the box labeled "PDP Exempt."

If "no" was checked for all questions in Part D, continue to Part E.

1. **Does the project ONLY include new or retrofit sidewalks, bicycle lanes, or trails that:**
   - **Are designed and constructed to direct storm water runoff to adjacent vegetated areas, or other non-erodible permeable areas? Or;**
   - **Are designed and constructed to be hydraulically disconnected from paved streets and roads? Or;**
   - **Are designed and constructed with permeable pavements or surfaces in accordance with the Green Streets guidance in the City's Storm Water Standards manual?**

   ☐ Yes; PDP exempt requirements apply ☒ No; next question

2. Does the project ONLY include retrofitting or redeveloping existing paved alleys, streets or roads designed and constructed in accordance with the Green Streets guidance in the City's Storm Water Standards Manual?

   ☐ Yes; PDP exempt requirements apply ☒ No; project not exempt.

PART E: Determine if Project is a Priority Development Project (PDP).
Projects that match one of the definitions below are subject to additional requirements including preparation of a Storm Water Quality Management Plan (SWQMP).

If "yes" is checked for any number in PART E, continue to PART F and check the box labeled "Priority Development Project".

If "no" is checked for every number in PART E, continue to PART F and check the box labeled "Standard Development Project".

1.	**New Development that creates 10,000 square feet or more of impervious surfaces collectively over the project site.** This includes commercial, industrial, residential, mixed-use, and public development projects on public or private land.	☒ Yes	☐ No
2.	**Redevelopment project that creates and/or replaces 5,000 square feet or more of impervious surfaces on an existing site of 10,000 square feet or more of impervious surfaces**. This includes commercial, industrial, residential, mixed-use, and public development projects on public or private land.	☐ Yes	☒ No
3.	**New development or redevelopment of a restaurant.** Facilities that sell prepared foods and drinks for consumption, including stationary lunch counters and refreshment stands selling prepared foods and drinks for immediate consumption (SIC 5812), and where the land development creates and/or replace 5,000 square feet or more of impervious surface.	☐ Yes	☒ No
4.	**New development or redevelopment on a hillside.** The project creates and/or replaces 5,000 square feet or more of impervious surface (collectively over the project site) and where the development will grade on any natural slope that is twenty-five percent or greater.	☐ Yes	☒ No
5.	**New development or redevelopment of a parking lot that creates and/or replaces 5,000 square feet or more of impervious surface (collectively over the project site).**	☒ Yes	☐ No
6.	**New development or redevelopment of streets, roads, highways, freeways, and driveways.** The project creates and/or replaces 5,000 square feet or more of impervious surface (collectively over the project site).	☐ Yes	☒ No

Clear Page 3

7. **New development or redevelopment discharging directly to an Environmentally Sensitive Area.** The project creates and/or replaces 2,500 square feet of impervious surface (collectively over project site), and discharges directly to an Environmentally Sensitive Area (ESA). "Discharging directly to" includes flow that is conveyed overland a distance of 200 feet or less from the project to the ESA, or conveyed in a pipe or open channel any distance as an isolated flow from the project to the ESA (i.e. not commingled with flows from adjacent lands). ☐ Yes ☒ No

8. **New development or redevelopment projects of a retail gasoline outlet (RGO) that create and/or replaces 5,000 square feet of impervious surface.** The development project meets the following criteria: (a) 5,000 square feet or more or (b) has a projected Average Daily Traffic (ADT) of 100 or more vehicles per day. ☐ Yes ☒ No

9. **New development or redevelopment projects of an automotive repair shops that creates and/or replaces 5,000 square feet or more of impervious surfaces.** Development projects categorized in any one of Standard Industrial Classification (SIC) codes 5013, 5014, 5541, 7532-7534, or 7536-7539. ☐ Yes ☒ No

10. **Other Pollutant Generating Project.** The project is not covered in the categories above, results in the disturbance of one or more acres of land and is expected to generate pollutants post construction, such as fertilizers and pesticides. This does not include projects creating less than 5,000 sf of impervious surface and where added landscaping does not require regular use of pesticides and fertilizers, such as slope stabilization using native plants. Calculation of the square footage of impervious surface need not include linear pathways that are for infrequent vehicle use, such as emergency maintenance access or bicycle pedestrian use, if they are built with pervious surfaces of if they sheet flow to surrounding pervious surfaces. ☐ Yes ☒ No

PART F: Select the appropriate category based on the outcomes of PART C through PART E.

1. The project is **NOT SUBJECT TO PERMANENT STORM WATER REQUIREMENTS**. ☐
2. The project is a **STANDARD DEVELOPMENT PROJECT**. Site design and source control BMP requirements apply. See the Storm Water Standards Manual for guidance. ☐
3. The project is **PDP EXEMPT**. Site design and source control BMP requirements apply. See the Storm Water Standards Manual for guidance. ☐
4. The project is a **PRIORITY DEVELOPMENT PROJECT**. Site design, source control, and structural pollutant control BMP requirements apply. See the Storm Water Standards Manual for guidance on determining if project requires a hydromodification plan management ☒

Bryan D Smith	Civil Engineer
Name of Owner or Agent *(Please Print)*	Title
BDS	11/18/2019
Signature	Date

Clear Page 4

Clear Form

THIS PAGE INTENTIONALLY LEFT BLANK FOR DOUBLE-SIDED PRINTING

Applicability of Permanent, Post-Construction Storm Water BMP Requirements	Form I-1

Project Identification

Project Name: Southwest Park	
Permit Application Number:	Date: 11/8/2019

Determination of Requirements

The purpose of this form is to identify permanent, post-construction requirements that apply to the project. This form serves as a short summary of applicable requirements, in some cases referencing separate forms that will serve as the backup for the determination of requirements.

Answer each step below, starting with **Step 1** and progressing through each step until reaching "Stop". Refer to the manual sections and/or separate forms referenced in each step below.

Step	Answer	Progression
Step 1: Is the project a "development project"? See Section 1.3 of the manual (Part 1 of Storm Water Standards) for guidance.	☑ Yes	Go to **Step 2**.
	☐ No	**Stop**. Permanent BMP requirements do not apply. No SWQMP will be required. Provide discussion below.
Discussion / justification if the project is not a "development project" (e.g., the project includes *only* interior remodels within an existing building):		
Step 2: Is the project a Standard Project, PDP, or PDP Exempt? To answer this item, see Section 1.4 of the manual in its entirety for guidance AND complete Form DS-560, Storm Water Requirements Applicability Checklist.	☐ Standard Project	**Stop.** Standard Project requirements apply
	☑ PDP	PDP requirements apply, including PDP SWQMP. Go to **Step 3**.
	☐ PDP Exempt	**Stop.** Standard Project requirements apply. Provide discussion and list any additional requirements below.
Discussion / justification, and additional requirements for exceptions to PDP definitions, if applicable:		

Project Name: Southwest Park

Form I-1 Page 2 of 2		
Step	**Answer**	**Progression**
Step 3. Is the project subject to earlier PDP requirements due to a prior lawful approval? See Section 1.10 of the manual (Part 1 of Storm Water Standards) for guidance.	☐ Yes	Consult the City Engineer to determine requirements. Provide discussion and identify requirements below. Go to **Step 4**.
	☑ No	BMP Design Manual PDP requirements apply. Go to **Step 4**.
Discussion / justification of prior lawful approval, and identify requirements (not required if prior lawful approval does not apply):		
Step 4. Do hydromodification control requirements apply? See Section 1.6 of the manual (Part 1 of Storm Water Standards) for guidance.	☑ Yes	PDP structural BMPs required for pollutant control (Chapter 5) and hydromodification control (Chapter 6). Go to **Step 5**.
	☐ No	**Stop**. PDP structural BMPs required for pollutant control (Chapter 5) only. Provide brief discussion of exemption to hydromodification control below.
Discussion / justification if hydromodification control requirements do not apply:		
Step 5. Does protection of critical coarse sediment yield areas apply? See Section 6.2 of the manual (Part 1 of Storm Water Standards) for guidance.	☐ Yes	Management measures required for protection of critical coarse sediment yield areas (Chapter 6.2). **Stop**.
	☑ No	Management measures not required for protection of critical coarse sediment yield areas. Provide brief discussion below. **Stop**.
Discussion / justification if protection of critical coarse sediment yield areas does not apply: There are no CCSYAs on site and the site does not impact any upstream CCSYAs.		

THIS PAGE INTENTIONALLY LEFT BLANK FOR DOUBLE-SIDED PRINTING

Project Name: Southwest Park

Site Information Checklist For PDPs	Form I-3B
Project Summary Information	
Project Name	Southwest Park
Project Address	South of Grove Street, between 25th Street & 27th Street San Diego, CA, 92154
Assessor's Parcel Number(s) (APN(s))	634-120-12,15,17
Permit Application Number	
Project Watershed	Select One: ☐ San Dieguito River ☐ Penasquitos ☐ Mission Bay ☐ San Diego River ☑ San Diego Bay ☐ Tijuana River
Hydrologic subarea name with Numeric Identifier up to two decimal places (9XX.XX)	Otay/Otay Valley, 910.20
Project Area (total area of Assessor's Parcel(s) associated with the project or total area of the right-of-way)	11.53 Acres (502,247 Square Feet)
Area to be disturbed by the project (Project Footprint)	11.53 Acres (502,247 Square Feet)
Project Proposed Impervious Area (subset of Project Footprint)	2.33 Acres (101,345 Square Feet)
Project Proposed Pervious Area (subset of Project Footprint)	9.2 Acres (400902 Square Feet)
Note: Proposed Impervious Area + Proposed Pervious Area = Area to be Disturbed by the Project. This may be less than the Project Area.	
The proposed increase or decrease in impervious area in the proposed condition as compared to the pre-project condition	N/A % 101,345SF OF IMPERVIOUS AREA ADDED

Form I-3B Page 2 of 11
Description of Existing Site Condition and Drainage Patterns
Current Status of the Site (select all that apply): ☐ Existing development ☐ Previously graded but not built out ☐ Agricultural or other non-impervious use ☑ Vacant, undeveloped/natural Description / Additional Information: The existing site is vacant and mostly undeveloped. There is a small existing parking lot in the northeast corner.
Existing Land Cover Includes (select all that apply): ☑ Vegetative Cover ☐ Non-Vegetated Pervious Areas ☐ Impervious Areas Description / Additional Information: The existing land cover is brush and grass.
Underlying Soil belongs to Hydrologic Soil Group (select all that apply): ☐ NRCS Type A ☐ NRCS Type B ☐ NRCS Type C ☑ NRCS Type D
Approximate Depth to Groundwater: ☐ Groundwater Depth < 5 feet ☐ 5 feet < Groundwater Depth < 10 feet ☐ 10 feet < Groundwater Depth < 20 feet ☑ Groundwater Depth > 20 feet
Existing Natural Hydrologic Features (select all that apply): ☑ Watercourses ☐ Seeps ☐ Springs ☐ Wetlands ☑ None Description / Additional Information: The site is located in an existing flood plain. Per FEMA Flood Insurance Rate Map, the site is located in within the floodway boundary

Form I-3B Page 3 of 11
Description of Existing Site Topography and Drainage
How is storm water runoff conveyed from the site? At a minimum, this description should answer: 1. Whether existing drainage conveyance is natural or urban; 2. If runoff from offsite is conveyed through the site? If yes, quantification of all offsite drainage areas, design flows, and locations where offsite flows enter the project site and summarize how such flows are conveyed through the site; 3. Provide details regarding existing project site drainage conveyance network, including storm drains, concrete channels, swales, detention facilities, storm water treatment facilities, and natural and constructed channels; 4. Identify all discharge locations from the existing project along with a summary of the conveyance system size and capacity for each of the discharge locations. Provide summary of the pre-project drainage areas and design flows to each of the existing runoff discharge locations.
Descriptions/Additional Information
The existing site is vacant and undeveloped. The site generally drains west toward an existing 24-inch RCP storm drain that runs underneath the Interstate 5 Freeway. 1. Existing drainage conveyance is natural. 2. In existing conditions, the offsite run-on from 27th street, Grove Street, and the adjacent residential sites on the east, runs through the site. 3. There is an existing 24-inch RCP storm drain located on the near the west boundary of the site. 4. In existing conditions, there are 2 discharge points. One discharge point is in the existing 24-inch RCP storm drain in the northwest corner of the site and drains towards Nestor Creek under I-5, and the second discharge point is to the existing 24-inch RCP storm drain located in towards the middle of the west boundary. See the Existing Hydrology Map in the Drainage Study included in Attachment 5.

Form I-3B Page 4 of 11
Description of Proposed Site Development and Drainage Patterns
Project Description / Proposed Land Use and/or Activities: The proposed Southwest Neighborhood Park is located between 25th and 27th Streets and South of Grove Avenue in the City of San Diego, CA. The project site encompasses approximately 11.5 acres, and the proposed park will include features such as multi-sport fields, multi-purpose courts, children's play areas, picnic shelters, parking lots, comfort station, security lighting, storm water facilities, and right-of-way improvements. The project also proposes street widening on Grove and 27th as well as the construction of new curb, gutter, and pedestrian sidewalk on all frontage streets.
List/describe proposed impervious features of the project (e.g., buildings, roadways, parking lots, courtyards, athletic courts, other impervious features): Impervious areas include: parking lots, athletic courts, children's play areas, sidewalks, and courtyard/plaza areas.
List/describe proposed pervious features of the project (e.g., landscape areas): The proposed pervious features include landscaped areas,planter areas, sports fields, dog park areas, and biofiltration basins.
Does the project include grading and changes to site topography? ☑ Yes ☐ No Description / Additional Information: The project proposes to raise the site above the flood plain. The site will still generally drain west to match existing conditions.

Form I-3B Page 5 of 11

Does the project include changes to site drainage (e.g., installation of new storm water conveyance systems)?

☑ Yes

☐ No

If yes, provide details regarding the proposed project site drainage conveyance network, including storm drains, concrete channels, swales, detention facilities, storm water treatment facilities, natural and constructed channels, and the method for conveying offsite flows through or around the proposed project site. Identify all discharge locations from the proposed project site along with a summary of the conveyance system size and capacity for each of the discharge locations. Provide a summary of pre and post-project drainage areas and design flows to each of the runoff discharge locations. Reference the drainage study for detailed calculations.

Description / Additional Information:

Run-on from the offsite areas will be diverted around the site using curb and gutter. Runoff will be collected and conveyed by a series of area drains, drain inlets, and storm drain throughout the site and will connect to an existing 24-inch RCP storm drain system that runs west underneath Interstate 5 Freeway. The site eventually discharges into Nestor Creek and ultimately into San Diego Bay.

See the Proposed Hydrology Map in the Drainage Study included in Attachment 5.

Form I-3B Page 6 of 11

Identify whether any of the following features, activities, and/or pollutant source areas will be present (select all that apply):

- ☑ Onsite storm drain inlets
- ☐ Interior floor drains and elevator shaft sump pumps
- ☐ Interior parking garages
- ☐ Need for future indoor & structural pest control
- ☐ Landscape/outdoor pesticide use
- ☐ Pools, spas, ponds, decorative fountains, and other water features
- ☐ Food service
- ☑ Refuse areas
- ☐ Industrial processes
- ☐ Outdoor storage of equipment or materials
- ☐ Vehicle and equipment cleaning
- ☐ Vehicle/equipment repair and maintenance
- ☐ Fuel dispensing areas
- ☐ Loading docks
- ☐ Fire sprinkler test water
- ☐ Miscellaneous drain or wash water
- ☑ Plazas, sidewalks, and parking lots

Description/Additional Information:

Form I-3B Page 7 of 11
Identification and Narrative of Receiving Water
Narrative describing flow path from discharge location(s), through urban storm conveyance system, to receiving creeks, rivers, and lagoons and ultimate discharge location to Pacific Ocean (or bay, lagoon, lake or reservoir, as applicable) The project site discharges into an existing 24-inch RCP storm drain on near the west boundary. The existing storm drain conveys flow under I-5 to the west into Nestor Creek and ultimately into San Diego Bay and Pacific Ocean.
Provide a summary of all beneficial uses of receiving waters downstream of the project discharge locations San Diego Bay - BIOL, COMM, EST, IND, MAR, MIGR, NAV, RARE, REC1, REC2, SHELL, WILD
Identify all ASBS (areas of special biological significance) receiving waters downstream of the project discharge locations N/A - No ASBS receiving waters downstream of project discharge.
Provide distance from project outfall location to impaired or sensitive receiving waters The project site drains to an existing storm drain system that ultimately discharges into Nestor Creek less than a mile away, which is ultimately discharges into San Diego Bay, which is approximately 3.5 miles from the site.
Summarize information regarding the proximity of the permanent, post-construction storm water BMPs to the City's Multi-Habitat Planning Area and environmentally sensitive lands The site is not located in a MHPA area according to city GIS data.

Form I-3B Page 8 of 11

Identification of Receiving Water Pollutants of Concern

List any 303(d) impaired water bodies within the path of storm water from the project site to the Pacific Ocean (or bay, lagoon, lake or reservoir, as applicable), identify the pollutant(s)/stressor(s) causing impairment, and identify any TMDLs and/or Highest Priority Pollutants from the WQIP for the impaired water bodies:

303(d) Impaired Water Body (Refer to Appendix K)	Pollutant(s)/Stressor(s) (Refer to Appendix K)	TMDLs/WQIP Highest Priority Pollutant (Refer to Table 1-4 in Chapter 1)
San Diego Bay	Mercury, PAHs, PCBs	TMDL Required

Identification of Project Site Pollutants*

*Identification of project site pollutants is only required if flow-thru treatment BMPs are implemented onsite in lieu of retention or biofiltration BMPs (note the project must also participate in an alternative compliance program unless prior lawful approval to meet earlier PDP requirements is demonstrated)

Identify pollutants anticipated from the project site based on all proposed use(s) of the site (see Appendix B.6):

Pollutant	Not Applicable to the Project Site	Anticipated from the Project Site	Also a Receiving Water Pollutant of Concern
Sediment	☐	☐	☐
Nutrients	☐	☐	☐
Heavy Metals	☐	☐	☐
Organic Compounds	☐	☐	☐
Trash & Debris	☐	☐	☐
Oxygen Demanding Substances	☐	☐	☐
Oil & Grease	☐	☐	☐
Bacteria & Viruses	☐	☐	☐
Pesticides	☐	☐	☐

Form I-3B Page 9 of 11

Hydromodification Management Requirements

Do hydromodification management requirements apply (see Section 1.6)?

☑ Yes, hydromodification management flow control structural BMPs required.

☐ No, the project will discharge runoff directly to existing underground storm drains discharging directly to water storage reservoirs, lakes, enclosed embayments, or the Pacific Ocean.

☐ No, the project will discharge runoff directly to conveyance channels whose bed and bank are concrete-lined all the way from the point of discharge to water storage reservoirs, lakes, enclosed embayments, or the Pacific Ocean.

☐ No, the project will discharge runoff directly to an area identified as appropriate for an exemption by the WMAA for the watershed in which the project resides.

Description / Additional Information (to be provided if a 'No' answer has been selected above):

Note: If "No" answer has been selected the SWQMP must include an exhibit that shows the storm water conveyance system from the project site to an exempt water body. The exhibit should include details about the conveyance system and the outfall to the exempt water body.

Critical Coarse Sediment Yield Areas*

*This Section only required if hydromodification management requirements apply

Based on Section 6.2 and Appendix H does CCSYA exist on the project footprint or in the upstream area draining through the project footprint?

☐ Yes

☑ No

Discussion / Additional Information:

Project will not impact any areas determined to be CCSYAs.

Form I-3B Page 10 of 11
Flow Control for Post-Project Runoff*   ***This Section only required if hydromodification management requirements apply**
List and describe point(s) of compliance (POCs) for flow control for hydromodification management (see Section 6.3.1). For each POC, provide a POC identification name or number correlating to the project's HMP Exhibit and a receiving channel identification name or number correlating to the project's HMP Exhibit.   Site stormwater runoff is conveyed via a network of area drains across the site. The discharge point for the majority of the site is at POC 1 which includes BMP 1 & BMP 2. POC 2 includes BMP 3 & BMP 4. Refer to Hydromodification Managment Exhibit (Attachment 2a in Attachment 2 of this report).   The project does not discharge to any inland water body nor any existing channels. POC 1 and POC 2 ultimately flow under I-5 and discharge into a drainage swale that flows to the northern reach of Nestor Creek.
Has a geomorphic assessment been performed for the receiving channel(s)?   ☑ No, the low flow threshold is $0.1Q_2$ (default low flow threshold)   ☐ Yes, the result is the low flow threshold is $0.1Q_2$ ☐ Yes, the result is the low flow threshold is $0.3Q_2$ ☐ Yes, the result is the low flow threshold is $0.5Q_2$ If a geomorphic assessment has been performed, provide title, date, and preparer:
Discussion / Additional Information: (optional)

Form I-3B Page 11 of 11
Other Site Requirements and Constraints
When applicable, list other site requirements or constraints that will influence storm water management design, such as zoning requirements including setbacks and open space, or local codes governing minimum street width, sidewalk construction, allowable pavement types, and drainage requirements. The site is located in a flood plain. It is constrained by the existing freeway, Nestor Creek, existing utilities, and adjacent private property.
Optional Additional Information or Continuation of Previous Sections As Needed
This space provided for additional information or continuation of information from previous sections as needed.

Project Name: Southwest Park

Source Control BMP Checklist for PDPs	Form I-4B

Source Control BMPs

All development projects must implement source control BMPs where applicable and feasible. See Chapter 4 and Appendix E of the BMP Design Manual (Part 1 of the Storm Water Standards) for information to implement source control BMPs shown in this checklist.

Answer each category below pursuant to the following.

- "Yes" means the project will implement the source control BMP as described in Chapter 4 and/or Appendix E of the BMP Design Manual. Discussion / justification is not required.
- "No" means the BMP is applicable to the project but it is not feasible to implement. Discussion / justification must be provided.
- "N/A" means the BMP is not applicable at the project site because the project does not include the feature that is addressed by the BMP (e.g., the project has no outdoor materials storage areas). Discussion / justification may be provided.

Source Control Requirement	Applied?		
4.2.1 Prevention of Illicit Discharges into the MS4	☑ Yes	☐ No	☐ N/A
Discussion / justification if 4.2.1 not implemented:			
4.2.2 Storm Drain Stenciling or Signage	☑ Yes	☐ No	☐ N/A
Discussion / justification if 4.2.2 not implemented:			
4.2.3 Protect Outdoor Materials Storage Areas from Rainfall, Run-On, Runoff, and Wind Dispersal	☐ Yes	☐ No	☑ N/A
Discussion / justification if 4.2.3 not implemented:			
4.2.4 Protect Materials Stored in Outdoor Work Areas from Rainfall, Run-On, Runoff, and Wind Dispersal	☐ Yes	☐ No	☑ N/A
Discussion / justification if 4.2.4 not implemented:			
4.2.5 Protect Trash Storage Areas from Rainfall, Run-On, Runoff, and Wind Dispersal	☑ Yes	☐ No	☐ N/A
Discussion / justification if 4.2.5 not implemented:			

Project Name: Southwest Park

Form I-4B Page 2 of 2			
Source Control Requirement	Applied?		
4.2.6 Additional BMPs Based on Potential Sources of Runoff Pollutants (must answer for each source listed below)			
On-site storm drain inlets	☑ Yes	☐ No	☐ N/A
Interior floor drains and elevator shaft sump pumps	☐ Yes	☐ No	☑ N/A
Interior parking garages	☐ Yes	☐ No	☑ N/A
Need for future indoor & structural pest control	☐ Yes	☐ No	☑ N/A
Landscape/Outdoor Pesticide Use	☐ Yes	☐ No	☐ N/A
Pools, spas, ponds, decorative fountains, and other water features	☐ Yes	☐ No	☑ N/A
Food service	☐ Yes	☐ No	☑ N/A
Refuse areas	☑ Yes	☐ No	☐ N/A
Industrial processes	☐ Yes	☐ No	☑ N/A
Outdoor storage of equipment or materials	☐ Yes	☐ No	☑ N/A
Vehicle/Equipment Repair and Maintenance	☐ Yes	☐ No	☑ N/A
Fuel Dispensing Areas	☐ Yes	☐ No	☑ N/A
Loading Docks	☐ Yes	☐ No	☑ N/A
Fire Sprinkler Test Water	☐ Yes	☐ No	☑ N/A
Miscellaneous Drain or Wash Water	☐ Yes	☐ No	☑ N/A
Plazas, sidewalks, and parking lots	☑ Yes	☐ No	☐ N/A
SC-6A: Large Trash Generating Facilities	☐ Yes	☐ No	☑ N/A
SC-6B: Animal Facilities	☐ Yes	☐ No	☐ N/A
SC-6C: Plant Nurseries and Garden Centers	☐ Yes	☐ No	☐ N/A
SC-6D: Automotive Facilities	☐ Yes	☐ No	☑ N/A
Discussion / justification if 4.2.6 not implemented. Clearly identify which sources of runoff pollutants are discussed. Justification must be provided for all "No" answers shown above.			

Project Name: Southwest Park

Site Design BMP Checklist for PDPs	Form I-5B

Site Design BMPs

All development projects must implement site design BMPs where applicable and feasible. See Chapter 4 and Appendix E of the BMP Design Manual (Part 1 of Storm Water Standards) for information to implement site design BMPs shown in this checklist.

Answer each category below pursuant to the following.

- "Yes" means the project will implement the site design BMP as described in Chapter 4 and/or Appendix E of the BMP Design Manual. Discussion / justification is not required.
- "No" means the BMP is applicable to the project but it is not feasible to implement. Discussion / justification must be provided.
- "N/A" means the BMP is not applicable at the project site because the project does not include the feature that is addressed by the BMP (e.g., the project site has no existing natural areas to conserve). Discussion / justification may be provided.

A site map with implemented site design BMPs must be included at the end of this checklist.

Site Design Requirement	Applied?		
4.3.1 Maintain Natural Drainage Pathways and Hydrologic Features	☑ Yes	☐ No	☐ N/A
Discussion / justification if 4.3.1 not implemented:			
1-1 Are existing natural drainage pathways and hydrologic features mapped on the site map?	☑ Yes	☐ No	☐ N/A
1-2 Are trees implemented? If yes, are they shown on the site map?	☐ Yes	☐ No	☑ N/A
1-3 Implemented trees meet the design criteria in 4.3.1 Fact Sheet (e.g. soil volume, maximum credit, etc.)?	☐ Yes	☐ No	☑ N/A
1-4 Is tree credit volume calculated using Appendix B.2.2.1 and SD-1 Fact Sheet in Appendix E?	☐ Yes	☐ No	☑ N/A
4.3.2 Have natural areas, soils and vegetation been conserved?	☑ Yes	☐ No	☐ N/A
Discussion / justification if 4.3.2 not implemented:			

Project Name: Southwest Park

Form I-5B Page 2 of 4			
Site Design Requirement	Applied?		
4.3.3 Minimize Impervious Area	☑ Yes	☐ No	☐ N/A
Discussion / justification if 4.3.3 not implemented:			
4.3.4 Minimize Soil Compaction	☑ Yes	☐ No	☐ N/A
Discussion / justification if 4.3.4 not implemented:			
4.3.5 Impervious Area Dispersion	☐ Yes	☐ No	☑ N/A
Discussion / justification if 4.3.5 not implemented:			
5-1 Is the pervious area receiving runon from impervious area identified on the site map?	☐ Yes	☐ No	☑ N/A
5-2 Does the pervious area satisfy the design criteria in 4.3.5 Fact Sheet in Appendix E (e.g. maximum slope, minimum length, etc.)	☐ Yes	☐ No	☑ N/A
5-3 Is impervious area dispersion credit volume calculated using Appendix B.2.1.1 and 4.3.5 Fact Sheet in Appendix E?	☐ Yes	☐ No	☑ N/A

Project Name: Southwest Park

Form I-5B Page 3 of 4			
Site Design Requirement	Applied?		
4.3.6 Runoff Collection	☑ Yes	☐ No	☐ N/A
Discussion / justification if 4.3.6 not implemented:			
6a-1 Are green roofs implemented in accordance with design criteria in 4.3.6A Fact Sheet? If yes, are they shown on the site map?	☐ Yes	☐ No	☑ N/A
6a-2 Is the green roof credit volume calculated using Appendix B.2.1.2 and 4.3.6A Fact Sheet in Appendix E?	☐ Yes	☐ No	☑ N/A
6b-1 Are permeable pavements implemented in accordance with design criteria in 4.3.6B Fact Sheet? If yes, are they shown on the site map?	☐ Yes	☐ No	☑ N/A
6b-2 Is the permeable pavement credit volume calculated using Appendix B.2.1.3 and 4.3.6B Fact Sheet in Appendix E?	☐ Yes	☐ No	☑ N/A
4.3.7 Landscaping with Native or Drought Tolerant Species	☑ Yes	☐ No	☐ N/A
Discussion / justification if 4.3.7 not implemented:			
4.3.8 Harvest and Use Precipitation	☐ Yes	☐ No	☑ N/A
Discussion / justification if 4.3.8 not implemented: Harvest and reuse was considered unnecessary for the site per Worksheet B.3-1.			
8-1 Are rain barrels implemented in accordance with design criteria in 4.3.8 Fact Sheet? If yes, are they shown on the site map?	☐ Yes	☐ No	☑ N/A
8-2 Is the rain barrel credit volume calculated using Appendix B.2.2.2 and 4.3.8 Fact Sheet in Appendix E?	☐ Yes	☐ No	☑ N/A

Project Name: Southwest Park

Form I-5B Page 4 of 4
Insert Site Map with all site design BMPs identified:
SEE DMA MAP IN APPENDIX

Project Name: Southwest Park

Summary of PDP Structural BMPs	Form I-6

PDP Structural BMPs

All PDPs must implement structural BMPs for storm water pollutant control (see Chapter 5 of the BMP Design Manual, Part 1 of Storm Water Standards). Selection of PDP structural BMPs for storm water pollutant control must be based on the selection process described in Chapter 5. PDPs subject to hydromodification management requirements must also implement structural BMPs for flow control for hydromodification management (see Chapter 6 of the BMP Design Manual). Both storm water pollutant control and flow control for hydromodification management can be achieved within the same structural BMP(s).

PDP structural BMPs must be verified by the City at the completion of construction. This includes requiring the project owner or project owner's representative to certify construction of the structural BMPs (complete Form DS-563). PDP structural BMPs must be maintained into perpetuity (see Chapter 7 of the BMP Design Manual).

Use this form to provide narrative description of the general strategy for structural BMP implementation at the project site in the box below. Then complete the PDP structural BMP summary information sheet (page 3 of this form) for each structural BMP within the project (copy the BMP summary information page as many times as needed to provide summary information for each individual structural BMP).

Describe the general strategy for structural BMP implementation at the site. This information must describe how the steps for selecting and designing storm water pollutant control BMPs presented in Section 5.1 of the BMP Design Manual were followed, and the results (type of BMPs selected). For projects requiring hydromodification flow control BMPs, indicate whether pollutant control and flow control BMPs are integrated or separate.

Step 1:
(A) DMA 3 and 5 will be self-treating, and DMA 7 will be considered De Minimus

(B) DCV is estimated for each delineated DMA; see calculations in Attachment 1.

Step 2:
Harvest and Reuse is not applicable for this project due to inadequate demand.

Step 3:
(A) Infiltration is infeasible.
(B) No Infiltration Condition.
(C) No Infiltration Condition per preliminary Geotechnical Report.

(continued on next page)

(Continue on page 2 as necessary.)

(Continued from page 1)

Step 4:
DMA 1: Biofiltration Basin (BF-1) will be used. Stormwater will be conveyed to BMP via sheet flow and storm drain.

DMA 2: Biofiltration Basin (BF-1) will be used. Stormwater will be conveyed to BMP via sheet flow and storm drain.

DMA 3: DMA will be considered self-treating

DMA 4: Biofiltration Basin (BF-1) will be used. Stormwater will be conveyed to BMP via sheet flow and storm drain.

DMA 5: DMA will be considered self-treating

DMA 6: Biofiltration Basin (BF-1) will be used. Stormwater will be conveyed to BMP via sheet flow and storm drain.

DMA 7: DMA will be considered De Minimus

Project Name: Southwest Park

Form I-6 Page 3 of 8 (Copy as many as needed)	
Structural BMP Summary Information	
Structural BMP ID No. BMP 1	
Construction Plan Sheet No. 2	
Type of Structural BMP: ☐ Retention by harvest and use (e.g. HU-1, cistern) ☐ Retention by infiltration basin (INF-1) ☐ Retention by bioretention (INF-2) ☐ Retention by permeable pavement (INF-3) ☐ Partial retention by biofiltration with partial retention (PR-1) ☐ Biofiltration (BF-1) ☐ Flow-thru treatment control with prior lawful approval to meet earlier PDP requirements (provide BMP type/description in discussion section below) ☐ Flow-thru treatment control included as pre-treatment/forebay for an onsite retention or biofiltration BMP (provide BMP type/description and indicate which onsite retention or biofiltration BMP it serves in discussion section below) ☐ Flow-thru treatment control with alternative compliance (provide BMP type/description in discussion section below) ☐ Detention pond or vault for hydromodification management ☐ Other (describe in discussion section below)	
Purpose: ☐ Pollutant control only ☐ Hydromodification control only ☐ Combined pollutant control and hydromodification control ☐ Pre-treatment/forebay for another structural BMP ☐ Other (describe in discussion section below)	
Who will certify construction of this BMP? Provide name and contact information for the party responsible to sign BMP verification form DS-563	Bryan Smith, PE Fuscoe Engineering 858-554-1500
Who will be the final owner of this BMP?	City of San Diego
Who will maintain this BMP into perpetuity?	City of San Diego
What is the funding mechanism for maintenance?	Public

Form I-6 Page 4 of 8 (Copy as many as needed)
Structural BMP ID No. BMP 1
Construction Plan Sheet No. 2
Discussion (as needed; must include worksheets showing BMP sizing calculations in the SWQMPs): See Sizing calculation worksheets

Project Name: Southwest Park

Form I-6 Page 5 of 8 (Copy as many as needed)	
Structural BMP Summary Information	
Structural BMP ID No. BMP 2	
Construction Plan Sheet No.	
Type of Structural BMP: ☐ Retention by harvest and use (e.g. HU-1, cistern) ☐ Retention by infiltration basin (INF-1) ☐ Retention by bioretention (INF-2) ☐ Retention by permeable pavement (INF-3) ☐ Partial retention by biofiltration with partial retention (PR-1) ☑ Biofiltration (BF-1) ☐ Flow-thru treatment control with prior lawful approval to meet earlier PDP requirements (provide BMP type/description in discussion section below) ☐ Flow-thru treatment control included as pre-treatment/forebay for an onsite retention or biofiltration BMP (provide BMP type/description and indicate which onsite retention or biofiltration BMP it serves in discussion section below) ☐ Flow-thru treatment control with alternative compliance (provide BMP type/description in discussion section below) ☐ Detention pond or vault for hydromodification management ☐ Other (describe in discussion section below)	
Purpose: ☐ Pollutant control only ☐ Hydromodification control only ☑ Combined pollutant control and hydromodification control ☐ Pre-treatment/forebay for another structural BMP ☐ Other (describe in discussion section below)	
Who will certify construction of this BMP? Provide name and contact information for the party responsible to sign BMP verification form DS-563	Bryan Smith, PE Fuscoe Engineering 858-554-1500
Who will be the final owner of this BMP?	City of San Diego
Who will maintain this BMP into perpetuity?	City of San Diego
What is the funding mechanism for maintenance?	Public

Form I-6 Page 6 of 8 (Copy as many as needed)
Structural BMP ID No. BMP 2
Construction Plan Sheet No.
Discussion (as needed; must include worksheets showing BMP sizing calculations in the SWQMPs): See Sizing calculation worksheets

Project Name: Southwest Park

Form I-6 Page 7 of 8 (Copy as many as needed)	
Structural BMP Summary Information	
Structural BMP ID No. BMP 3	
Construction Plan Sheet No. 2	
Type of Structural BMP: ☐ Retention by harvest and use (e.g. HU-1, cistern) ☐ Retention by infiltration basin (INF-1) ☐ Retention by bioretention (INF-2) ☐ Retention by permeable pavement (INF-3) ☐ Partial retention by biofiltration with partial retention (PR-1) ☐ Biofiltration (BF-1) ☐ Flow-thru treatment control with prior lawful approval to meet earlier PDP requirements (provide BMP type/description in discussion section below) ☐ Flow-thru treatment control included as pre-treatment/forebay for an onsite retention or biofiltration BMP (provide BMP type/description and indicate which onsite retention or biofiltration BMP it serves in discussion section below) ☐ Flow-thru treatment control with alternative compliance (provide BMP type/description in discussion section below) ☐ Detention pond or vault for hydromodification management ☐ Other (describe in discussion section below)	
Purpose: ☐ Pollutant control only ☐ Hydromodification control only ☐ Combined pollutant control and hydromodification control ☐ Pre-treatment/forebay for another structural BMP ☐ Other (describe in discussion section below)	
Who will certify construction of this BMP? Provide name and contact information for the party responsible to sign BMP verification form DS-563	Bryan Smith, PE Fuscoe Engineering 858-554-1500
Who will be the final owner of this BMP?	City of San Diego
Who will maintain this BMP into perpetuity?	City of San Diego
What is the funding mechanism for maintenance?	Public

Form I-6 Page 8 of 8 (Copy as many as needed)
Structural BMP ID No. BMP 3
Construction Plan Sheet No. 2
Discussion (as needed; must include worksheets showing BMP sizing calculations in the SWQMPs): See Sizing calculation worksheets

Project Name: Southwest Park

Form I-6 Page 9 of 10 (Copy as many as needed)	
Structural BMP Summary Information	
Structural BMP ID No. BMP 4	
Construction Plan Sheet No. 2	
Type of Structural BMP: ☐ Retention by harvest and use (e.g. HU-1, cistern) ☐ Retention by infiltration basin (INF-1) ☐ Retention by bioretention (INF-2) ☐ Retention by permeable pavement (INF-3) ☐ Partial retention by biofiltration with partial retention (PR-1) ☑ Biofiltration (BF-1) ☐ Flow-thru treatment control with prior lawful approval to meet earlier PDP requirements (provide BMP type/description in discussion section below) ☐ Flow-thru treatment control included as pre-treatment/forebay for an onsite retention or biofiltration BMP (provide BMP type/description and indicate which onsite retention or biofiltration BMP it serves in discussion section below) ☐ Flow-thru treatment control with alternative compliance (provide BMP type/description in discussion section below) ☐ Detention pond or vault for hydromodification management ☐ Other (describe in discussion section below)	
Purpose: ☐ Pollutant control only ☐ Hydromodification control only ☑ Combined pollutant control and hydromodification control ☐ Pre-treatment/forebay for another structural BMP ☐ Other (describe in discussion section below)	
Who will certify construction of this BMP? Provide name and contact information for the party responsible to sign BMP verification form DS-563	Bryan Smith, PE Fuscoe Engineering 858-554-1500
Who will be the final owner of this BMP?	City of San Diego
Who will maintain this BMP into perpetuity?	City of San Diego
What is the funding mechanism for maintenance?	Public

Project Name: Southwest Park

Form I-6 Page 10 of 10 (Copy as many as needed)
Structural BMP ID No. BMP 4
Construction Plan Sheet No. 2
Discussion (as needed; must include worksheets showing BMP sizing calculations in the SWQMPs): See Sizing calculation worksheets

THIS PAGE INTENTIONALLY LEFT BLANK FOR DOUBLE-SIDED PRINTING

Attachment 1
Backup For PDP Pollutant Control BMPs

This is the cover sheet for Attachment 1.

THIS PAGE INTENTIONALLY LEFT BLANK FOR DOUBLE-SIDED PRINTING

Project Name: Southwest Park

Indicate which Items are Included:

Attachment Sequence	Contents	Checklist
Attachment 1a	DMA Exhibit (Required) See DMA Exhibit Checklist.	☑ Included
Attachment 1b	Tabular Summary of DMAs Showing DMA ID matching DMA Exhibit, DMA Area, and DMA Type (Required)* *Provide table in this Attachment OR on DMA Exhibit in Attachment 1a	☑ Included on DMA Exhibit in Attachment 1a ☐ Included as Attachment 1b, separate from DMA Exhibit
Attachment 1c	Form I-7, Harvest and Use Feasibility Screening Checklist (Required unless the entire project will use infiltration BMPs) Refer to Appendix B.3-1 of the BMP Design Manual to complete Form I-7.	☑ Included ☐ Not included because the entire project will use infiltration BMPs
Attachment 1d	Infiltration Feasibility Information. Contents of Attachment 1d depend on the infiltration condition: • No Infiltration Condition: ○ Infiltration Feasibility Condition Letter (***Note: must be stamped and signed by licensed geotechnical engineer***) ○ Form I-8A (optional) ○ Form I-8B (optional) • Partial Infiltration Condition: ○ Infiltration Feasibility Condition Letter (***Note: must be stamped and signed by licensed geotechnical engineer***) ○ Form I-8A ○ Form I-8B • Full Infiltration Condition: ○ Form I-8A ○ Form I-8B ○ Worksheet C.4-3 ○ Form I-9 Refer to Appendices C and D of the BMP Design Manual for guidance.	☑ Included ☐ Not included because the entire project will use harvest and use BMPs
Attachment 1e	Pollutant Control BMP Design Worksheets / Calculations (Required) Refer to Appendices B and E of the BMP Design Manual for structural pollutant control BMP design guidelines and site design credit calculations	☑ Included

Project Name: Southwest Park

Use this checklist to ensure the required information has been included on the DMA Exhibit:

The DMA Exhibit must identify:

- ☑ Underlying hydrologic soil group
- ☑ Approximate depth to groundwater
- ☑ Existing natural hydrologic features (watercourses, seeps, springs, wetlands)
- ☐ Critical coarse sediment yield areas to be protected
- ☑ Existing topography and impervious areas
- ☑ Existing and proposed site drainage network and connections to drainage offsite
- ☑ Proposed grading
- ☑ Proposed impervious features
- ☑ Proposed design features and surface treatments used to minimize imperviousness
- ☑ Drainage management area (DMA) boundaries, DMA ID numbers, and DMA areas (square footage or acreage), and DMA type (i.e., drains to BMP, self-retaining, or self-mitigating)
- ☑ Potential pollutant source areas and corresponding required source controls (see Chapter 4, Appendix E.1, and Form I-3B)
- ☑ Structural BMPs (identify location, type of BMP, size/detail, and include cross-section)

LEGEND

- PROPERTY LINE
- EXISTING EASEMENT
- RIGHT-OF-WAY
- STREET CENTERLINE
- EXISTING STORM DRAIN
- DMA LIMITS
- DIRECTION OF FLOW
- PROPOSED BIOFILTRATION — BMP 1
- DMA DESIGNATION — DMA 1
- EXISTING CONTOUR — 260
- PROPOSED CONTOUR — 280
- PROPOSED STORM DRAIN
- PROPOSED PERVIOUS AREA
- PROPOSED IMPERVIOUS AREA
- GREEN STREET EXEMPTION

PROJECT SITE INFO

UNDERLYING HYDROLOGIC SOIL: D
APPROXIMATE DEPTH TO GROUNDWATER: 50 FT
EXISTING NATURAL HYDROLOGIC FEATURES (WATERCOURSES, SEEPS, SPRINGS, WETLANDS): NONE
CRITICAL COARSE SEDIMENT YIELD AREAS TO BE PROTECTED: NONE
EXISTING IMPERVIOUS AREA: 0 SF
DISTURBED AREA: 508,247 SF
PROPOSED/REPLACED IMPERVIOUS AREA: 101,345 SF
PROPOSED PERVIOUS AREA (INCLUDES LANDSCAPING): 400,902 SF

PERMANENT STORM WATER BMP NOTES

1 POLLUTANT CONTROL BMP (BF-1, BIOFILTRATION W/PARTIAL INFILTRATION)

SOURCE CONTROL BMP

SC-1 PREVENTION OF ILLICIT DISCHARGES INTO THE MS4
SC-2 STORM DRAIN STENCILING OR SIGNAGE
SC-5 PROTECT TRASH STORAGE AREAS FROM RAINFALL, RUN-ON, RUNOFF, AND WIND DISPERSAL

POLLUTANT CONTROL BMP SUMMARY TABLE

SOUTHWEST PARK DMA SUMMARY TABLE

DMA	TOTAL AREA (AC)	TOTAL AREA (SF)	PERVIOUS AREA (SF)	PERMEABLE PAVERS (SF)	IMPERVIOUS AREA - ROOFS, CONCRETE, ASPHALT (SF)	METHOD OF TREATMENT	TREATMENT REQUIRED BASIN AREA (SF) OR FLOWRATE (CFS)	HMP TREATMENT REQUIRED (SF)	TREATMENT PROVIDED BASIN AREA (SF) OR FLOWRATE (CFS)
1	3.22	140,331	111,905	0	28,426	Drains to BMPs 2(Bio-filtration)	1,103	2,714	3,126
2	4.96	216,244	179,958	0	36,286	Drains to BMPs 1(Bio-filtration)	1,520	1,981	2,452
3	1.55	67,587	62,897	0	4,690	Self Mitigating	-		-
4	0.58	25,327	6,268	0	19,059	Drains to BMP 3 (Bio-filtration)	771	984	1,313
5	0.41	17,932	17,932	0	0	Self Mitigating	-		-
6	0.79	34,303	13,159	0	21,144	Drains to BMP 4(Bio-filtration)	610	1,786	2,130
7	0.01	250	0	0	250	De Minimus	-	-	-
TOTAL	11.52	501,974	392,119	0	109,605				

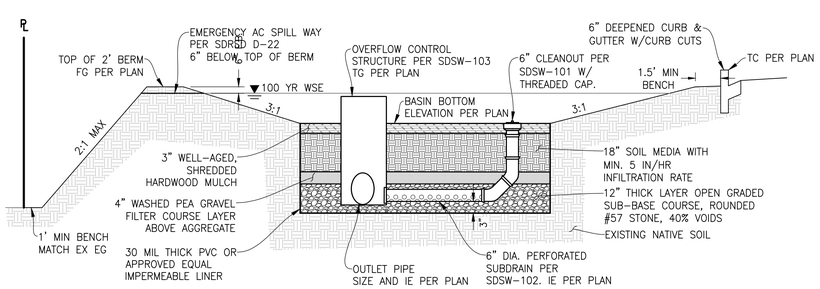

BIOFILTRATION BASIN DETAIL

NOT TO SCALE

50' 0' 25' 50'
SCALE: 1" = 50'

SOUTHWEST PARK

ATTACHMENT 1a □ 1□ - DRAINAGE MANAGEMENT AREAS (DMA) EXHIBIT MAP

FUSCOE ENGINEERING
6390 Greenwich Dr., Suite 170
San Diego, California 92122
tel 858.554.1500 • fax 858.597.0335
www.fuscoe.com

JOB NO. 1440-009
DRAWN BY: B.C.
SHEET 1 o□1

F:\Projects\1440\009_Support Files\Reports\SWQMP\Attachments\Attachment 1a&b - DMA Exhibit\DMA EXHIBIT.dwg (6/25/2020 4:16 PM) Plotted by: Brittany Couri

Attachment 1c

Harvest and Use Feasibility Checklist	Worksheet B.3-1 : Form I-7

1. Is there a demand for harvested water (check all that apply) at the project site that is reliably present during the wet season?

☐ Toilet and urinal flushing
☑ Landscape irrigation
☐ Other:_____

2. If there is a demand; estimate the anticipated average wet season demand over a period of 36 hours. Guidance for planning level demand calculations for toilet/urinal flushing and landscape irrigation is provided in Section B.3.2.
[Provide a summary of calculations here]
According to Landscape Architect and Irrigation Designer, the demand 36 hours after a rain event is 0.

3. Calculate the DCV using worksheet B-2.1.
DCV = 6,446 (cubic feet)
[Provide a summary of calculations here]
85th percentile 24-hr storm: d = 0.55 inches
Area tributary to BMP = 11.53 acres
Weighted runoff coefficient: C = 0.28
No tree credit or rain barrel credit

3a. Is the 36-hour demand greater than or equal to the DCV?	3b. Is the 36-hour demand greater than 0.25DCV but less than the full DCV?	3c. Is the 36-hour demand less than 0.25DCV?
☐ Yes / ☑ No ⇨ ⇩	☐ Yes / ☑ No ⇨ ⇩	☑ Yes ⇩
Harvest and use appears to be feasible. Conduct more detailed evaluation and sizing calculations to confirm that DCV can be used at an adequate rate to meet drawdown criteria.	Harvest and use may be feasible. Conduct more detailed evaluation and sizing calculations to determine feasibility. Harvest and use may only be able to be used for a portion of the site, or (optionally) the storage may need to be upsized to meet long term capture targets while draining in longer than 36 hours.	Harvest and use is considered to be infeasible.

Is harvest and use feasible based on further evaluation?
☐ Yes, refer to Appendix E to select and size harvest and use BMPs.
☑ No, select alternate BMPs.

APPENDIX C

STORM WATER MANAGEMENT

We understand storm water management devices are being proposed in accordance with the current Storm Water Standards (SWS). If not properly constructed, there is a potential for distress to improvements and properties located hydrologically down gradient or adjacent to these devices. Factors such as the amount of water to be detained, its residence time, and soil permeability have an important effect on seepage transmission and the potential adverse impacts that may occur if the storm water management features are not properly designed and constructed. We have not performed a hydrogeological study at the site. If infiltration of storm water runoff occurs, downstream properties and improvements may be subjected to seeps, springs, slope instability, raised groundwater, movement of foundations and slabs, or other undesirable impacts as a result of water infiltration.

Hydrologic Soil Group

The United States Department of Agriculture (USDA), Natural Resources Conservation Services, possesses general information regarding the existing soil conditions for areas within the United States. The USDA website also provides the Hydrologic Soil Group. Table C-1 presents the descriptions of the hydrologic soil groups. In addition, the USDA website also provides an estimated saturated hydraulic conductivity for the existing soil.

TABLE C-1
HYDROLOGIC SOIL GROUP DEFINITIONS

Soil Group	Soil Group Definition
A	Soils having a high infiltration rate (low runoff potential) when thoroughly wet. These consist mainly of deep, well drained to excessively drained sands or gravelly sands. These soils have a high rate of water transmission.
B	Soils having a moderate infiltration rate when thoroughly wet. These consist chiefly of moderately deep or deep, moderately well drained or well drained soils that have moderately fine texture to moderately coarse texture. These soils have a moderate rate of water transmission.
C	Soils having a slow infiltration rate when thoroughly wet. These consist chiefly of soils having a layer that impedes the downward movement of water or soils of moderately fine texture or fine texture. These soils have a slow rate of water transmission.
D	Soils having a very slow infiltration rate (high runoff potential) when thoroughly wet. These consist chiefly of clays that have a high shrink-swell potential, soils that have a high water table, soils that have a claypan or clay layer at or near the surface, and soils that are shallow over nearly impervious material. These soils have a very slow rate of water transmission.

The property is underlain by undocumented fill, alluvium, and very old paralic deposits. Table C-2 presents the information from the USDA website for the subject property.

TABLE C-2
USDA WEB SOIL SURVEY – HYDROLOGIC SOIL GROUP

Map Unit Name	Map Unit Symbol	Approximate Percentage of Property	Hydrologic Soil Group
Huerhuero loam, 2 to 9 percent slopes	HrC	59.5	D
Huerhuero loam, 5 to 9 percent slopes	HrC	40.5	D

Infiltration Testing

We performed two borehole infiltration tests at the locations shown on Figure 2. The test holes were excavated using a 4-inch hand-auger. Table C-3 presents the results of the testing. The calculation sheets are also provided herein.

We used the guidelines presented in the Riverside County Low Impact Development BMP Design Handbook. Based on this widely accepted guideline, the saturated hydraulic conductivity (Ksat) is equivalent to the infiltration rate. Therefore, the Ksat value determined from our testing is assumed to be the unfactored infiltration rate.

TABLE C-3
UNFACTORED, FIELD-SATURATED, INFILTRATION TEST RESULTS

Test No.	Depth (inches)	Geologic Unit	Field Infiltration Rate, I (in/hr)	Factored* Field Infiltration Rate, I (in/hr)
A-1	31	Qop	0.007	0.0035
A-2	20	Qal	0.014	0.007

* Factor of Safety of 2.0 for feasibility determination.

STORM WATER MANAGEMENT CONCLUSIONS

Soil Types

Undocumented Fill (Qudf) – We encountered undocumented fill varying between about 1 to 4.5 feet thick at the south end of the site. The undocumented fill within structural improvement areas will be removed and replaced as compacted fill. Water that is allowed to migrate into the undocumented fill or future compacted fill will cause settlement. Therefore, full and partial infiltration should be considered infeasible within fill.

Topsoil (Unmapped) – We encountered topsoil varying between about 1.5 to 3 feet thick. The topsoil within structural improvement areas will be removed and replaced with compacted fill. Water that is

allowed to migrate into the topsoil or future compacted fill will cause soil movement. Therefore, full and partial infiltration should be considered infeasible within topsoil.

Alluvium (Qal) – We encountered alluvium varying between about 2.5 to 9 feet thick in the north and west portions of the site. The alluvium within structural improvement areas will be removed and replaced as compacted fill. Due to the clayey nature of the alluvium and its low infiltration characteristics, full and partial infiltration should be considered infeasible within the alluvium.

Old Paralic Deposits (Qop) – We encountered old paralic deposits at the base of the surficial soils. Infiltration in the old paralic deposits is not feasible due to very low infiltration characteristics.

Groundwater Elevation

Groundwater was not encountered in our trenches to the maximum depths explored. Infiltration should not impact groundwater.

Existing Utilities

Existing utilities are located at the central portion of the site and along the western edge of the property. Infiltration near these utilities is considered infeasible. Otherwise, infiltration due to utility concerns would be feasible.

Soil or Groundwater Contamination

We are unaware of contaminated soil or groundwater on the property. Therefore, full and partial infiltration associated with this risk is considered feasible.

Infiltration Rates

Our test results indicated unfactored infiltration rates were 0.007 and 0.014 inches per hour for tests A-1 and A-2, respectively. The infiltration rates are not high enough to support full or partial infiltration.

Storm Water Management Devices

Liners should be incorporated in BMP basins. The liner should be impermeable (e.g. High-density polyethylene, HDPE, with a thickness of about 30 mil or equivalent Polyvinyl Chloride, PVC). Penetration of the liners should be properly sealed. The devices should also be installed in accordance with the manufacturer's recommendations. Overflow protection devices should also be incorporated into the design and construction of the storm water management device.

Storm Water Standard Worksheets

The SWS requests the geotechnical engineer complete the *Categorization of Infiltration Feasibility Condition* (Worksheet C.4-1) worksheet information to help evaluate the potential for infiltration on the property. The attached Worksheet C.4-1 presents the completed information for the submittal process.

The regional storm water standards also have a worksheet (Worksheet Form D.5-1) that helps the project civil engineer estimate the factor of safety based on several factors. Table C-4 describes the suitability assessment input parameters related to the geotechnical engineering aspects for the factor of safety determination.

TABLE C-4
SUITABILITY ASSESSMENT RELATED CONSIDERATIONS FOR INFILTRATION FACILITY SAFETY FACTORS

Consideration	High Concern – 3 Points	Medium Concern – 2 Points	Low Concern – 1 Point
Assessment Methods	Use of soil survey maps or simple texture analysis to estimate short-term infiltration rates. Use of well permeameter or borehole methods without accompanying continuous boring log. Relatively sparse testing with direct infiltration methods	Use of well permeameter or borehole methods with accompanying continuous boring log. Direct measurement of infiltration area with localized infiltration measurement methods (e.g., Infiltrometer). Moderate spatial resolution	Direct measurement with localized (i.e. small-scale) infiltration testing methods at relatively high resolution or use of extensive test pit infiltration measurement methods.
Predominant Soil Texture	Silty and clayey soils with significant fines	Loamy soils	Granular to slightly loamy soils
Site Soil Variability	Highly variable soils indicated from site assessment or unknown variability	Soil boring/test pits indicate moderately homogenous soils	Soil boring/test pits indicate relatively homogenous soils
Depth to Groundwater/ Impervious Layer	<5 feet below facility bottom	5-15 feet below facility bottom	>15 feet below facility bottom

Table C-5 presents the estimated factor values for the evaluation of the factor of safety. This table only presents the suitability assessment safety factor (Part A) of the worksheet. The project civil engineer should evaluate the safety factor for design (Part B) and use the combined safety factor for the design infiltration rate.

TABLE C-5
FACTOR OF SAFETY WORKSHEET D.5-1 DESIGN VALUES[1]

Suitability Assessment Factor Category	Assigned Weight (w)	Factor Value (v)	Product (p = w x v)
Assessment Methods	0.25	2	0.50
Predominant Soil Texture	0.25	2	0.50
Site Soil Variability	0.25	3	0.75
Depth to Groundwater/Impervious Layer	0.25	1	0.25
Suitability Assessment Safety Factor, $S_A = \Sigma p$			2.0

[1] The project civil engineer should complete Worksheet D.5-1 using the data on this table. Additional information is required to evaluate the design factor of safety.

CONCLUSIONS

Our results indicate the site has relatively slow infiltration characteristics. Because of the site conditions, it is our opinion that there is a potential for lateral water migration. Undocumented fill, topsoil, and alluvium exists on the property that will ultimately be removed and recompacted in the area of the planned improvements. It is our opinion that full or partial infiltration is infeasible on this site. Our evaluation included the soil and geologic conditions, estimated settlement and volume change of the underlying soil, slope stability, utility considerations, groundwater mounding, retaining walls, foundations and existing groundwater elevations.

Categorization of Infiltration Feasibility Condition based on Geotechnical Conditions	Worksheet C.4-1: Form I-8A[10]
Part 1 - Full Infiltration Feasibility Screening Criteria	
DMA(s) Being Analyzed:	Project Phase:
Site	Preliminary
Criteria 1: Infiltration Rate Screening	

1A	Is the mapped hydrologic soil group according to the NRCS Web Soil Survey or UC Davis Soil Web Mapper Type A or B and corroborated by available site soil data[11]? ☐Yes; the DMA may feasibly support full infiltration. Answer "Yes" to Criteria 1 Result or continue to Step 1B if the applicant elects to perform infiltration testing. ☐No; the mapped soil types are A or B but is not corroborated by available site soil data (continue to Step 1B). ☑No; the mapped soil types are C, D, or "urban/unclassified" and is corroborated by available site soil data. Answer "No" to Criteria 1 Result. ☐No; the mapped soil types are C, D, or "urban/unclassified" but is not corroborated by available site soil data (continue to Step 1B).
1B	Is the reliable infiltration rate calculated using planning phase methods from Table D.3-1? ☐Yes; Continue to Step 1C. ☐No; Skip to Step 1D.
1C	Is the reliable infiltration rate calculated using planning phase methods from Table D.3-1 greater than 0.5 inches per hour? ☐Yes; the DMA may feasibly support full infiltration. Answer "Yes" to Criteria 1 Result. ☐No; full infiltration is not required. Answer "No" to Criteria 1 Result.
1D	**Infiltration Testing Method.** Is the selected infiltration testing method suitable during the design phase (see Appendix D.3)? Note: Alternative testing standards may be allowed with appropriate rationales and documentation. ☐Yes; continue to Step 1E. ☐No; select an appropriate infiltration testing method.

Note that it is not required to investigate each and every criterion in the worksheet, a single "no" answer in Part 1, Part 2, Part 3, or Part 4 determines a full, partial, or no infiltration condition.

[10] This form must be completed each time there is a change to the site layout that would affect the infiltration feasibility condition. Previously completed forms shall be retained to document the evolution of the site storm water design.

[11] Available data includes site-specific sampling or observation of soil types or texture classes, such as obtained from borings or test pits necessary to support other design elements.

Categorization of Infiltration Feasibility Condition based on Geotechnical Conditions	Worksheet C.4-1: Form I-8A[10]
1E	**Number of Percolation/Infiltration Tests.** Does the infiltration testing method performed satisfy the minimum number of tests specified in Table D.3-2? ☐Yes; continue to Step 1F. ☐No; conduct appropriate number of tests.
IF	**Factor of Safety.** Is the suitable Factor of Safety selected for full infiltration design? See guidance in D.5; Tables D.5-1 and D.5-2; and Worksheet D.5-1 (Form I-9). ☐Yes; continue to Step 1G. ☐No; select appropriate factor of safety.
1G	**Full Infiltration Feasibility.** Is the average measured infiltration rate divided by the Factor of Safety greater than 0.5 inches per hour? ☐Yes; answer "Yes" to Criteria 1 Result. ☐No; answer "No" to Criteria 1 Result.
Criteria 1 Result	Is the estimated reliable infiltration rate greater than 0.5 inches per hour within the DMA where runoff can reasonably be routed to a BMP? ☐Yes; the DMA may feasibly support full infiltration. Continue to Criteria 2. ☑No; full infiltration is not required. Skip to Part 1 Result.

Summarize infiltration testing methods, testing locations, replicates, and results and summarize estimates of reliable infiltration rates according to procedures outlined in D.5. Documentation should be included in project geotechnical report.

We performed field-saturated, hydraulic conductivity tests, A-1 and A-2, using a Soil Moisture Corp Aardvark Permeameter. The location of the infiltration tests are shown on the Geologic Map, Figure 2. The test holes were excavated using conventional hand tools and a 4-inch diameter hand auger. The unfactored test results of the saturated hydraulic conductivity tests for A-1 and A-2 is 0.007 and 0.014 in/hr, respectively.

Categorization of Infiltration Feasibility Condition based on Geotechnical Conditions		Worksheet C.4-1: Form I-8A[10]	
Criteria 2: Geologic/Geotechnical Screening			
2A	If all questions in Step 2A are answered "Yes," continue to Step 2B. For any "No" answer in Step 2A answer "No" to Criteria 2, and submit an "Infiltration Feasibility Condition Letter" that meets the requirements in Appendix C.1.1. The geologic/geotechnical analyses listed in Appendix C.2.1 do not apply to the DMA because one of the following setbacks cannot be avoided and therefore result in the DMA being in a no infiltration condition. The setbacks must be the closest horizontal radial distance from the surface edge (at the overflow elevation) of the BMP.		
2A-1	Can the proposed full infiltration BMP(s) avoid areas with existing fill materials greater than 5 feet thick below the infiltrating surface?	☐Yes	☐No
2A-2	Can the proposed full infiltration BMP(s) avoid placement within 10 feet of existing underground utilities, structures, or retaining walls?	☐Yes	☐No
2A-3	Can the proposed full infiltration BMP(s) avoid placement within 50 feet of a natural slope (>25%) or within a distance of 1.5H from fill slopes where H is the height of the fill slope?	☐Yes	☐No
2B	When full infiltration is determined to be feasible, a geotechnical investigation report must be prepared that considers the relevant factors identified in Appendix C.2.1. If all questions in Step 2B are answered "Yes," then answer "Yes" to Criteria 2 Result. If there are "No" answers continue to Step 2C.		
2B-1	**Hydroconsolidation.** Analyze hydroconsolidation potential per approved ASTM standard due to a proposed full infiltration BMP. Can full infiltration BMPs be proposed within the DMA without increasing hydroconsolidation risks?	☐Yes	☐No
2B-2	**Expansive Soils.** Identify expansive soils (soils with an expansion index greater than 20) and the extent of such soils due to proposed full infiltration BMPs. Can full infiltration BMPs be proposed within the DMA without increasing expansive soil risks?	☐Yes	☐No

Categorization of Infiltration Feasibility Condition based on Geotechnical Conditions		Worksheet C.4-1: Form I-8A[10]	
2B-3	**Liquefaction**. If applicable, identify mapped liquefaction areas. Evaluate liquefaction hazards in accordance with Section 6.4.2 of the City of San Diego's Guidelines for Geotechnical Reports (2011 or most recent edition). Liquefaction hazard assessment shall take into account any increase in groundwater elevation or groundwater mounding that could occur as a result of proposed infiltration or percolation facilities. Can full infiltration BMPs be proposed within the DMA without increasing liquefaction risks?	☐Yes	☐No
2B-4	**Slope Stability**. If applicable, perform a slope stability analysis in accordance with the ASCE and Southern California Earthquake Center (2002) Recommended Procedures for Implementation of DMG Special Publication 117, Guidelines for Analyzing and Mitigating Landslide Hazards in California to determine minimum slope setbacks for full infiltration BMPs. See the City of San Diego's Guidelines for Geotechnical Reports (2011) to determine which type of slope stability analysis is required. Can full infiltration BMPs be proposed within the DMA without increasing slope stability risks?	☐Yes	☐No
2B-5	**Other Geotechnical Hazards.** Identify site-specific geotechnical hazards not already mentioned (refer to Appendix C.2.1). Can full infiltration BMPs be proposed within the DMA without increasing risk of geologic or geotechnical hazards not already mentioned?	☐Yes	☐No
2B-6	**Setbacks.** Establish setbacks from underground utilities, structures, and/or retaining walls. Reference applicable ASTM or other recognized standard in the geotechnical report. Can full infiltration BMPs be proposed within the DMA using established setbacks from underground utilities, structures, and/or retaining walls?	☐ Yes	☐ No

Categorization of Infiltration Feasibility Condition based on Geotechnical Conditions		Worksheet C.4-1: Form I-8A[10]	
2C	**Mitigation Measures.** Propose mitigation measures for each geologic/geotechnical hazard identified in Step 2B. Provide a discussion of geologic/geotechnical hazards that would prevent full infiltration BMPs that cannot be reasonably mitigated in the geotechnical report. See Appendix C.2.1.8 for a list of typically reasonable and typically unreasonable mitigation measures. Can mitigation measures be proposed to allow for full infiltration BMPs? If the question in Step 2 is answered "Yes," then answer "Yes" to Criteria 2 Result. If the question in Step 2C is answered "No," then answer "No" to Criteria 2 Result.	☐Yes	☐No
Criteria 2 Result	Can infiltration greater than 0.5 inches per hour be allowed without increasing risk of geologic or geotechnical hazards that cannot be reasonably mitigated to an acceptable level?	☐Yes	☐No
Summarize findings and basis; provide references to related reports or exhibits.			

Part 1 Result – Full Infiltration Geotechnical Screening [12]	Result
If answers to both Criteria 1 and Criteria 2 are "Yes", a full infiltration design is potentially feasible based on Geotechnical conditions only. If either answer to Criteria 1 or Criteria 2 is "No", a full infiltration design is not required.	☐Full infiltration Condition ☑Complete Part 2

[12] To be completed using gathered site information and best professional judgement considering the definition of MEP in the MS4 Permit. Additional testing and/or studies may be required by City Engineer to substantiate findings.

Categorization of Infiltration Feasibility Condition based on Geotechnical Conditions	Worksheet C.4-1: Form I-8A[10]
Part 2 – Partial vs. No Infiltration Feasibility Screening Criteria	
DMA(s) Being Analyzed:	Project Phase:
	Preliminary

Criteria 3 : Infiltration Rate Screening	
3A	**NRCS Type C, D, or "urban/unclassified":** Is the mapped hydrologic soil group according to the NRCS Web Soil Survey or UC Davis Soil Web Mapper is Type C, D, or "urban/unclassified" and corroborated by available site soil data? ☐ Yes; the site is mapped as C soils and a reliable infiltration rate of 0.15 in/hr. is used to size partial infiltration BMPS. Answer "Yes" to Criteria 3 Result. ☐ Yes; the site is mapped as D soils or "urban/unclassified" and a reliable infiltration rate of 0.05 in/hr. is used to size partial infiltration BMPS. Answer "Yes" to Criteria 3 Result. ☑ No; infiltration testing is conducted (refer to Table D.3-1), continue to Step 3B.
3B	**Infiltration Testing Result:** Is the reliable infiltration rate (i.e. average measured infiltration rate/2) greater than 0.05 in/hr. and less than or equal to 0.5 in/hr? ☐ Yes; the site may support partial infiltration. Answer "Yes" to Criteria 3 Result. ☑ No; the reliable infiltration rate (i.e. average measured rate/2) is less than 0.05 in/hr., partial infiltration is not required. Answer "No" to Criteria 3 Result.
Criteria 3 Result	Is the estimated reliable infiltration rate (i.e., average measured infiltration rate/2) greater than or equal to 0.05 inches/hour and less than or equal to 0.5 inches/hour at any location within each DMA where runoff can reasonably be routed to a BMP? ☐ Yes; Continue to Criteria 4. ☑ No: Skip to Part 2 Result.

Summarize infiltration testing and/or mapping results (i.e. soil maps and series description used for infiltration rate).

We performed field-saturated, hydraulic conductivity tests, A-1 and A-2, using a Soil Moisture Corp Aardvark Permeameter. The location of the infiltration tests are shown on the Geologic Map, Figure 2. The test holes were excavated using conventional hand tools and a 4-inch diameter hand auger. The unfactored test results of the saturated hydraulic conductivity tests for A-1 and A-2 is 0.007 and 0.014 in/hr, respectively.

Categorization of Infiltration Feasibility Condition based on Geotechnical Conditions		Worksheet C.4-1: Form I-8A[10]	
Criteria 4: Geologic/Geotechnical Screening			
4A	If all questions in Step 4A are answered "Yes," continue to Step 2B. For any "No" answer in Step 4A answer "No" to Criteria 4 Result, and submit an "Infiltration Feasibility Condition Letter" that meets the requirements in Appendix C.1.1. The geologic/geotechnical analyses listed in Appendix C.2.1 do not apply to the DMA because one of the following setbacks cannot be avoided and therefore result in the DMA being in a no infiltration condition. The setbacks must be the closest horizontal radial distance from the surface edge (at the overflow elevation) of the BMP.		
4A-1	Can the proposed partial infiltration BMP(s) avoid areas with existing fill materials greater than 5 feet thick?	☐Yes	☐No
4A-2	Can the proposed partial infiltration BMP(s) avoid placement within 10 feet of existing underground utilities, structures, or retaining walls?	☐Yes	☐No
4A-3	Can the proposed partial infiltration BMP(s) avoid placement within 50 feet of a natural slope (>25%) or within a distance of 1.5H from fill slopes where H is the height of the fill slope?	☐Yes	☐No
4B	When full infiltration is determined to be feasible, a geotechnical investigation report must be prepared that considers the relevant factors identified in Appendix C.2.1 If all questions in Step 4B are answered "Yes," then answer "Yes" to Criteria 4 Result. If there are any "No" answers continue to Step 4C.		
4B-1	**Hydroconsolidation.** Analyze hydroconsolidation potential per approved ASTM standard due to a proposed full infiltration BMP. Can partial infiltration BMPs be proposed within the DMA without increasing hydroconsolidation risks?	☐Yes	☐No
4B-2	**Expansive Soils.** Identify expansive soils (soils with an expansion index greater than 20) and the extent of such soils due to proposed full infiltration BMPs. Can partial infiltration BMPs be proposed within the DMA without increasing expansive soil risks?	☐Yes	☐No

Categorization of Infiltration Feasibility Condition based on Geotechnical Conditions		Worksheet C.4-1: Form I-8A[10]	
4B-3	**Liquefaction**. If applicable, identify mapped liquefaction areas. Evaluate liquefaction hazards in accordance with Section 6.4.2 of the City of San Diego's Guidelines for Geotechnical Reports (2011). Liquefaction hazard assessment shall take into account any increase in groundwater elevation or groundwater mounding that could occur as a result of proposed infiltration or percolation facilities. Can partial infiltration BMPs be proposed within the DMA without increasing liquefaction risks?	☐Yes	☐No
4B-4	**Slope Stability**. If applicable, perform a slope stability analysis in accordance with the ASCE and Southern California Earthquake Center (2002) Recommended Procedures for Implementation of DMG Special Publication 117, Guidelines for Analyzing and Mitigating Landslide Hazards in California to determine minimum slope setbacks for full infiltration BMPs. See the City of San Diego's Guidelines for Geotechnical Reports (2011) to determine which type of slope stability analysis is required. Can partial infiltration BMPs be proposed within the DMA without increasing slope stability risks?	☐Yes	☐No
4B-5	**Other Geotechnical Hazards.** Identify site-specific geotechnical hazards not already mentioned (refer to Appendix C.2.1). Can partial infiltration BMPs be proposed within the DMA without increasing risk of geologic or geotechnical hazards not already mentioned?	☐Yes	☐No
4B-6	**Setbacks.** Establish setbacks from underground utilities, structures, and/or retaining walls. Reference applicable ASTM or other recognized standard in the geotechnical report. Can partial infiltration BMPs be proposed within the DMA using recommended setbacks from underground utilities, structures, and/or retaining walls?	☐Yes	☐No
4C	**Mitigation Measures.** Propose mitigation measures for each geologic/geotechnical hazard identified in Step 4B. Provide a discussion on geologic/geotechnical hazards that would prevent partial infiltration BMPs that cannot be reasonably mitigated in the geotechnical report. See Appendix C.2.1.8 for a list of typically reasonable and typically unreasonable mitigation measures. Can mitigation measures be proposed to allow for partial infiltration BMPs? If the question in Step 4C is answered "Yes," then answer "Yes" to Criteria 4 Result. If the question in Step 4C is answered "No," then answer "No" to Criteria 4 Result.	☐Yes	☐No

Categorization of Infiltration Feasibility Condition based on Geotechnical Conditions		Worksheet C.4-1: Form I-8A[10]	
Criteria 4 Result	Can infiltration of greater than or equal to 0.05 inches/hour and less than or equal to 0.5 inches/hour be allowed without increasing the risk of geologic or geotechnical hazards that cannot be reasonably mitigated to an acceptable level?	☐ Yes	☑ No

Summarize findings and basis; provide references to related reports or exhibits.

Test results indicate infiltration rates less than 0.05 in/hr and are not high enough to support infiltration.

Part 2 – Partial Infiltration Geotechnical Screening Result[13]	Result
If answers to both Criteria 3 and Criteria 4 are "Yes", a partial infiltration design is potentially feasible based on geotechnical conditions only. If answers to either Criteria 3 or Criteria 4 is "No", then infiltration of any volume is considered to be infeasible within the site.	☐ Partial Infiltration Condition ☑ No Infiltration Condition

[13] To be completed using gathered site information and best professional judgement considering the definition of MEP in the MS4 Permit. Additional testing and/or studies may be required by City Engineer to substantiate findings.

Attachment 1e

DMA 1- BMP 1 (BIO-FILTRATION)

Design Capture Volume		Worksheet B.2-1		
1	85th percentile 24-hr storm depth from Figure B.1-1	d=	0.55	inches
2	Area tributary to BMP (s)	A=	4.96	acres
3	Area weighted runoff factor (estimate using Appendix B.1.1 and B.2.1)	C=	0.23	unitless
4	Trees Credit Volume Note: In the SWQMP list the number of trees, size of each tree, amount of soil volume installed for each tree, contributing area to each tree and the inlet opening dimension for each tree.	TCV=	0	cubic-feet
5	Rain barrels Credit Volume Note: In the SWQMP list the number of rain barrels, size of each rain barrel and the use of the captured storm water runoff.	RCV=	0	cubic-feet
6	Calculate DCV = (3630 x C x d x A) – TCV - RCV	DCV=	2280	cubic-feet

<u>BMP 3 (DMA 4) - C runoff Factor Calculations:</u>

C hardscape = 0.90

C landscape = 0.10

Total Area = 216,244 sf

Pervious Area = 179,958 sf

Impervious Area = 36,289 sf

Weighted Area = (179,958 x 0.10) + (36,289 x 0.90) = 36,716.5 sf

C = weighted area / total area

C = 36,716.5 / 216,244

C = 0.23

The City of SAN DIEGO	Project Name	Southwest Park	
	BMP ID	BMP 1 (Biofiltration)	
Sizing Method for Pollutant Removal Criteria		**Worksheet B.5-1**	
1	Area draining to the BMP	216,244	sq. ft.
2	Adjusted runoff factor for drainage area (Refer to Appendix B.1 and B.2)	0.23	
3	85th percentile 24-hour rainfall depth	0.55	inches
4	Design capture volume [Line 1 x Line 2 x (Line 3/12)]	2280	cu. ft.
BMP Parameters			
5	Surface ponding [6 inch minimum, 12 inch maximum]	6	inches
6	Media thickness [18 inches minimum], also add mulch layer and washed ASTM 33 fine aggregate sand thickness to this line for sizing calculations	18	inches
7	Aggregate storage (also add ASTM No 8 stone) above underdrain invert (12 inches typical) – use 0 inches if the aggregate is not over the entire bottom surface area	9	inches
8	Aggregate storage below underdrain invert (3 inches minimum) – use 0 inches if the aggregate is not over the entire bottom surface area	3	inches
9	Freely drained pore storage of the media	0.2	in/in
10	Porosity of aggregate storage	0.4	in/in
11	Media filtration rate to be used for sizing (maximum filtration rate of 5 in/hr. with no outlet control; if the filtration rate is controlled by the outlet use the outlet controlled rate (includes infiltration into the soil and flow rate through the outlet structure) which will be less than 5 in/hr.)	5	in/hr.
Baseline Calculations			
12	Allowable routing time for sizing	6	hours
13	Depth filtered during storm [Line 11 x Line 12]	30	inches
14	Depth of Detention Storage [Line 5 + (Line 6 x Line 9) + (Line 7 x Line 10) + (Line 8 x Line 10)]	14.4	inches
15	Total Depth Treated [Line 13 + Line 14]	44.4	inches
Option 1 – Biofilter 1.5 times the DCV			
16	Required biofiltered volume [1.5 x Line 4]	3419	cu. ft.
17	Required Footprint [Line 16/ Line 15] x 12	924	sq. ft.
Option 2 - Store 0.75 of remaining DCV in pores and ponding			
18	Required Storage (surface + pores) Volume [0.75 x Line 4]	1710	cu. ft.
19	Required Footprint [Line 18/ Line 14] x 12	1425	sq. ft.
Footprint of the BMP			
20	BMP Footprint Sizing Factor (Default 0.03 or an alternative minimum footprint sizing factor from Line 11 in Worksheet B.5-4)	0.03	
21	Minimum BMP Footprint [Line 1 x Line 2 x Line 20]	1492	sq. ft.
22	Footprint of the BMP = Maximum(Minimum(Line 17, Line 19), Line 21)	1492	sq. ft.
23	Provided BMP Footprint	2452	sq. ft.
24	Is Line 23 ≥ Line 22?	**Yes, Performance Standard is Met**	

The City of SAN DIEGO	Project Name	Southwest Park	
	BMP ID	BMP 1	
Sizing Method for Volume Retention Criteria		**Worksheet B.5-2**	
1	Area draining to the BMP	216,244	sq. ft.
2	Adjusted runoff factor for drainage area (Refer to Appendix B.1 and B.2)	0.23	
3	85th percentile 24-hour rainfall depth	0.55	inches
4	Design capture volume [Line 1 x Line 2 x (Line 3/12)]	2280	cu. ft.
Volume Retention Requirement			
5	Measured infiltration rate in the DMA Note: When mapped hydrologic soil groups are used enter 0.10 for NRCS Type D soils and for NRCS Type C soils enter 0.30 When in no infiltration condition and the actual measured infiltration rate is unknown enter 0.0 if there are geotechnical and/or groundwater hazards identified in Appendix C or enter 0.05	0	in/hr.
6	Factor of safety	2	
7	Reliable infiltration rate, for biofiltration BMP sizing [Line 5 / Line 6]	0	in/hr.
8	Average annual volume reduction target (Figure B.5-2) When Line 7 > 0.01 in/hr. = Minimum (40, 166.9 x Line 7 +6.62) When Line 7 ≤ 0.01 in/hr. = 3.5%	3.5	%
9	Fraction of DCV to be retained (Figure B.5-3) When Line 8 > 8% = $0.0000013 \times \text{Line } 8^3 - 0.000057 \times \text{Line } 8^2 + 0.0086 \times \text{Line } 8 - 0.014$ When Line 8 ≤ 8% = 0.023	0.023	
10	Target volume retention [Line 9 x Line 4]	52	cu. ft.

The City of SAN DIEGO	Project Name	Southwest Park
	BMP ID	BMP 1

Volume Retention for No Infiltration Condition		Worksheet B.5-6	
1	Area draining to the biofiltration BMP	216244	sq. ft.
2	Adjusted runoff factor for drainage area (Refer to Appendix B.1 and B.2)	0.23	
3	Effective impervious area draining to the BMP [Line 1 x Line 2]	49736	sq. ft.
4	Required area for Evapotranspiration [Line 3 x 0.03]	1492	sq. ft.
5	Biofiltration BMP Footprint	2452	sq. ft.

Landscape Area (must be identified on DS-3247)

		Identification	1	2	3	4	5
6	Landscape area that meet the requirements in SD-B and SD-F Fact Sheet (sq. ft.)		2452				
7	Impervious area draining to the landscape area (sq. ft.)		36286				
8	Impervious to Pervious Area ratio [Line 7/Line 6]		14.80	0.00	0.00	0.00	0.00
9	Effective Credit Area If (Line 8 >1.5, Line 6, Line 7/1.5]		2452	0	0	0	0
10	Sum of Landscape area [sum of Line 9 Id's 1 to 5]					2452	sq. ft.
11	Provided footprint for evapotranspiration [Line 5 + Line 10]					4904	sq. ft.

Volume Retention Performance Standard

12	Is Line 11 ≥ Line 4?	Volume Retention Performance Standard is Met	
13	Fraction of the performance standard met through the BMP footprint and/or landscaping [Line 11/Line 4]	3.29	
14	Target Volume Retention [Line 10 from Worksheet B.5.2]	52	cu. ft.
15	Volume retention required from other site design BMPs [(1-Line 13) x Line 14]	-119.08	cu. ft.

Site Design BMP

	Identification	Site Design Type	Credit	
16	1			cu. ft.
	2			cu. ft.
	3			cu. ft.
	4			cu. ft.
	5			cu. ft.
	Sum of volume retention benefits from other site design BMPs (e.g. trees; rain barrels etc.). [sum of Line 16 Credits for Id's 1 to 5] Provide documentation of how the site design credit is calculated in the PDP SWQMP.		0	cu. ft.
17	Is Line 16 ≥ Line 15?	Volume Retention Performance Standard is Met		

Attachment 1e

DMA 2- BMP 2 (BIO-FILTRATION)

Design Capture Volume		Worksheet B.2-1		
1	85th percentile 24-hr storm depth from Figure B.1-1	d=	0.55	inches
2	Area tributary to BMP (s)	A=	3.22	acres
3	Area weighted runoff factor (estimate using Appendix B.1.1 and B.2.1)	C=	0.26	unitless
4	Trees Credit Volume Note: In the SWQMP list the number of trees, size of each tree, amount of soil volume installed for each tree, contributing area to each tree and the inlet opening dimension for each tree.	TCV=	0	cubic-feet
5	Rain barrels Credit Volume Note: In the SWQMP list the number of rain barrels, size of each rain barrel and the use of the captured storm water runoff.	RCV=	0	cubic-feet
6	Calculate DCV = (3630 x C x d x A) – TCV - RCV	DCV=	1672	cubic-feet

<u>BMP 3 (DMA 4) - C runoff Factor Calculations:</u>

C hardscape = 0.90

C landscape = 0.10

Total Area = 140,331 sf

Pervious Area = 111,905 sf

Impervious Area = 28,426 sf

Weighted Area = (111,331 x 0.10) + (28,426 x 0.90) = 36,716.5 sf

C = weighted area / total area

C = 36,716.5 / 140,331

C = 0.26

The City of SAN DIEGO	Project Name	Southwest Park	
	BMP ID	BMP 2 (Biofiltration)	
Sizing Method for Pollutant Removal Criteria		**Worksheet B.5-1**	
1	Area draining to the BMP	140,331	sq. ft.
2	Adjusted runoff factor for drainage area (Refer to Appendix B.1 and B.2)	0.26	
3	85th percentile 24-hour rainfall depth	0.55	inches
4	Design capture volume [Line 1 x Line 2 x (Line 3/12)]	1672	cu. ft.
BMP Parameters			
5	Surface ponding [6 inch minimum, 12 inch maximum]	6	inches
6	Media thickness [18 inches minimum], also add mulch layer and washed ASTM 33 fine aggregate sand thickness to this line for sizing calculations	18	inches
7	Aggregate storage (also add ASTM No 8 stone) above underdrain invert (12 inches typical) – use 0 inches if the aggregate is not over the entire bottom surface area	9	inches
8	Aggregate storage below underdrain invert (3 inches minimum) – use 0 inches if the aggregate is not over the entire bottom surface area	3	inches
9	Freely drained pore storage of the media	0.2	in/in
10	Porosity of aggregate storage	0.4	in/in
11	Media filtration rate to be used for sizing (maximum filtration rate of 5 in/hr. with no outlet control; if the filtration rate is controlled by the outlet use the outlet controlled rate (includes infiltration into the soil and flow rate through the outlet structure) which will be less than 5 in/hr.)	5	in/hr.
Baseline Calculations			
12	Allowable routing time for sizing	6	hours
13	Depth filtered during storm [Line 11 x Line 12]	30	inches
14	Depth of Detention Storage [Line 5 + (Line 6 x Line 9) + (Line 7 x Line 10) + (Line 8 x Line 10)]	14.4	inches
15	Total Depth Treated [Line 13 + Line 14]	44.4	inches
Option 1 – Biofilter 1.5 times the DCV			
16	Required biofiltered volume [1.5 x Line 4]	2508	cu. ft.
17	Required Footprint [Line 16/ Line 15] x 12	678	sq. ft.
Option 2 - Store 0.75 of remaining DCV in pores and ponding			
18	Required Storage (surface + pores) Volume [0.75 x Line 4]	1254	cu. ft.
19	Required Footprint [Line 18/ Line 14] x 12	1045	sq. ft.
Footprint of the BMP			
20	BMP Footprint Sizing Factor (Default 0.03 or an alternative minimum footprint sizing factor from Line 11 in Worksheet B.5-4)	0.03	
21	Minimum BMP Footprint [Line 1 x Line 2 x Line 20]	1095	sq. ft.
22	Footprint of the BMP = Maximum(Minimum(Line 17, Line 19), Line 21)	1095	sq. ft.
23	Provided BMP Footprint	3126	sq. ft.
24	Is Line 23 ≥ Line 22?	**Yes, Performance Standard is Met**	

The City of SAN DIEGO	Project Name	Southwest Park	
	BMP ID	BMP 2 (Biofiltration)	
Sizing Method for Volume Retention Criteria		**Worksheet B.5-2**	
1	Area draining to the BMP	140,331	sq. ft.
2	Adjusted runoff factor for drainage area (Refer to Appendix B.1 and B.2)	0.26	
3	85th percentile 24-hour rainfall depth	0.55	inches
4	Design capture volume [Line 1 x Line 2 x (Line 3/12)]	1672	cu. ft.
Volume Retention Requirement			
5	Measured infiltration rate in the DMA Note: When mapped hydrologic soil groups are used enter 0.10 for NRCS Type D soils and for NRCS Type C soils enter 0.30 When in no infiltration condition and the actual measured infiltration rate is unknown enter 0.0 if there are geotechnical and/or groundwater hazards identified in Appendix C or enter 0.05	0	in/hr.
6	Factor of safety	2	
7	Reliable infiltration rate, for biofiltration BMP sizing [Line 5 / Line 6]	0	in/hr.
8	Average annual volume reduction target (Figure B.5-2) When Line 7 > 0.01 in/hr. = Minimum (40, 166.9 x Line 7 +6.62) When Line 7 ≤ 0.01 in/hr. = 3.5%	3.5	%
9	Fraction of DCV to be retained (Figure B.5-3) When Line 8 > 8% = $0.0000013 \times \text{Line } 8^3 - 0.000057 \times \text{Line } 8^2 + 0.0086 \times \text{Line } 8 - 0.014$ When Line 8 ≤ 8% = 0.023	0.023	
10	Target volume retention [Line 9 x Line 4]	38	cu. ft.

The City of SAN DIEGO	Project Name	Southwest Park
	BMP ID	BMP 2 (Biofiltration Basin)

Volume Retention for No Infiltration Condition		Worksheet B.5-6	
1	Area draining to the biofiltration BMP	140331	sq. ft.
2	Adjusted runoff factor for drainage area (Refer to Appendix B.1 and B.2)	0.26	
3	Effective impervious area draining to the BMP [Line 1 x Line 2]	36486	sq. ft.
4	Required area for Evapotranspiration [Line 3 x 0.03]	1095	sq. ft.
5	Biofiltration BMP Footprint	3126	sq. ft.

Landscape Area (must be identified on DS-3247)

		Identification	1	2	3	4	5
6	Landscape area that meet the requirements in SD-B and SD-F Fact Sheet (sq. ft.)		3126				
7	Impervious area draining to the landscape area (sq. ft.)		28426				
8	Impervious to Pervious Area ratio [Line 7/Line 6]		9.09	0.00	0.00	0.00	0.00
9	Effective Credit Area If (Line 8 >1.5, Line 6, Line 7/1.5]		3126	0	0	0	0
10	Sum of Landscape area [sum of Line 9 Id's 1 to 5]					3126	sq. ft.
11	Provided footprint for evapotranspiration [Line 5 + Line 10]					6252	sq. ft.

Volume Retention Performance Standard

12	Is Line 11 ≥ Line 4?	Volume Retention Performance Standard is Met	
13	Fraction of the performance standard met through the BMP footprint and/or landscaping [Line 11/Line 4]	5.71	
14	Target Volume Retention [Line 10 from Worksheet B.5.2]	38	cu. ft.
15	Volume retention required from other site design BMPs [(1-Line 13) x Line 14]	-178.98	cu. ft.

Site Design BMP

	Identification	Site Design Type	Credit	
16	1			cu. ft.
	2			cu. ft.
	3			cu. ft.
	4			cu. ft.
	5			cu. ft.
	Sum of volume retention benefits from other site design BMPs (e.g. trees; rain barrels etc.). [sum of Line 16 Credits for Id's 1 to 5] Provide documentation of how the site design credit is calculated in the PDP SWQMP.		0	cu. ft.
17	Is Line 16 ≥ Line 15?	Volume Retention Performance Standard is Met		

Attachment 1e

DMA 4- BMP 3 (BIO-FILTRATION)

Design Capture Volume		Worksheet B.2-1		
1	85th percentile 24-hr storm depth from Figure B.1-1	d=	0.55	inches
2	Area tributary to BMP (s)	A=	0.58	acres
3	Area weighted runoff factor (estimate using Appendix B.1.1 and B.2.1)	C=	0.70	unitless
4	Trees Credit Volume Note: In the SWQMP list the number of trees, size of each tree, amount of soil volume installed for each tree, contributing area to each tree and the inlet opening dimension for each tree.	TCV=	0	cubic-feet
5	Rain barrels Credit Volume Note: In the SWQMP list the number of rain barrels, size of each rain barrel and the use of the captured storm water runoff.	RCV=	0	cubic-feet
6	Calculate DCV = (3630 x C x d x A) – TCV - RCV	DCV=	813	cubic-feet

<u>BMP 3 (DMA 4) - C runoff Factor Calculations:</u>

C hardscape = 0.90

C landscape = 0.10

Total Area = 25,327 sf

Pervious Area = 6,268 sf

Impervious Area = 19,059 sf

Weighted Area = (6,268 x 0.10) + (19,059 x 0.90) = 17,779.9 sf

C = weighted area / total area

C = 17,779.9 / 25,327

C = 0.70

The City of SAN DIEGO	Project Name	Southwest Park	
	BMP ID	BMP 3 (Biofiltration)	
Sizing Method for Pollutant Removal Criteria		**Worksheet B.5-1**	
1	Area draining to the BMP	25327	sq. ft.
2	Adjusted runoff factor for drainage area (Refer to Appendix B.1 and B.2)	0.7	
3	85th percentile 24-hour rainfall depth	0.55	inches
4	Design capture volume [Line 1 x Line 2 x (Line 3/12)]	813	cu. ft.
BMP Parameters			
5	Surface ponding [6 inch minimum, 12 inch maximum]	6	inches
6	Media thickness [18 inches minimum], also add mulch layer and washed ASTM 33 fine aggregate sand thickness to this line for sizing calculations	18	inches
7	Aggregate storage (also add ASTM No 8 stone) above underdrain invert (12 inches typical) – use 0 inches if the aggregate is not over the entire bottom surface area	9	inches
8	Aggregate storage below underdrain invert (3 inches minimum) – use 0 inches if the aggregate is not over the entire bottom surface area	3	inches
9	Freely drained pore storage of the media	0.2	in/in
10	Porosity of aggregate storage	0.4	in/in
11	Media filtration rate to be used for sizing (maximum filtration rate of 5 in/hr. with no outlet control; if the filtration rate is controlled by the outlet use the outlet controlled rate (includes infiltration into the soil and flow rate through the outlet structure) which will be less than 5 in/hr.)	5	in/hr.
Baseline Calculations			
12	Allowable routing time for sizing	6	hours
13	Depth filtered during storm [Line 11 x Line 12]	30	inches
14	Depth of Detention Storage [Line 5 + (Line 6 x Line 9) + (Line 7 x Line 10) + (Line 8 x Line 10)]	14.4	inches
15	Total Depth Treated [Line 13 + Line 14]	44.4	inches
Option 1 – Biofilter 1.5 times the DCV			
16	Required biofiltered volume [1.5 x Line 4]	1219	cu. ft.
17	Required Footprint [Line 16/ Line 15] x 12	329	sq. ft.
Option 2 - Store 0.75 of remaining DCV in pores and ponding			
18	Required Storage (surface + pores) Volume [0.75 x Line 4]	609	cu. ft.
19	Required Footprint [Line 18/ Line 14] x 12	508	sq. ft.
Footprint of the BMP			
20	BMP Footprint Sizing Factor (Default 0.03 or an alternative minimum footprint sizing factor from Line 11 in Worksheet B.5-4)	0.03	
21	Minimum BMP Footprint [Line 1 x Line 2 x Line 20]	532	sq. ft.
22	Footprint of the BMP = Maximum(Minimum(Line 17, Line 19), Line 21)	532	sq. ft.
23	Provided BMP Footprint	1313	sq. ft.
24	Is Line 23 ≥ Line 22?	**Yes, Performance Standard is Met**	

The City of SAN DIEGO	Project Name	Southwest Park	
	BMP ID	BMP 3 (Biofiltration)	
Sizing Method for Volume Retention Criteria		**Worksheet B.5-2**	
1	Area draining to the BMP	25327	sq. ft.
2	Adjusted runoff factor for drainage area (Refer to Appendix B.1 and B.2)	0.7	
3	85th percentile 24-hour rainfall depth	0.55	inches
4	Design capture volume [Line 1 x Line 2 x (Line 3/12)]	813	cu. ft.
Volume Retention Requirement			
5	Measured infiltration rate in the DMA Note: When mapped hydrologic soil groups are used enter 0.10 for NRCS Type D soils and for NRCS Type C soils enter 0.30 When in no infiltration condition and the actual measured infiltration rate is unknown enter 0.0 if there are geotechnical and/or groundwater hazards identified in Appendix C or enter 0.05	0	in/hr.
6	Factor of safety	2	
7	Reliable infiltration rate, for biofiltration BMP sizing [Line 5 / Line 6]	0	in/hr.
8	Average annual volume reduction target (Figure B.5-2) When Line 7 > 0.01 in/hr. = Minimum (40, 166.9 x Line 7 +6.62) When Line 7 ≤ 0.01 in/hr. = 3.5%	3.5	%
9	Fraction of DCV to be retained (Figure B.5-3) When Line 8 > 8% = $0.0000013 \times \text{Line } 8^3 - 0.000057 \times \text{Line } 8^2 + 0.0086 \times \text{Line } 8 - 0.014$ When Line 8 ≤ 8% = 0.023	0.023	
10	Target volume retention [Line 9 x Line 4]	19	cu. ft.

The City of SAN DIEGO	Project Name	Southwest Park
	BMP ID	BMP 3 (Biofiltration Basin)

Volume Retention for No Infiltration Condition		Worksheet B.5-6	
1	Area draining to the biofiltration BMP	25327	sq. ft.
2	Adjusted runoff factor for drainage area (Refer to Appendix B.1 and B.2)	0.7	
3	Effective impervious area draining to the BMP [Line 1 x Line 2]	17729	sq. ft.
4	Required area for Evapotranspiration [Line 3 x 0.03]	532	sq. ft.
5	Biofiltration BMP Footprint	1313	sq. ft.

Landscape Area (must be identified on DS-3247)

		Identification	1	2	3	4	5
6	Landscape area that meet the requirements in SD-B and SD-F Fact Sheet (sq. ft.)		1313				
7	Impervious area draining to the landscape area (sq. ft.)		19059				
8	Impervious to Pervious Area ratio [Line 7/Line 6]		14.52	0.00	0.00	0.00	0.00
9	Effective Credit Area If (Line 8 >1.5, Line 6, Line 7/1.5]		1313	0	0	0	0
10	Sum of Landscape area [sum of Line 9 Id's 1 to 5]					1313	sq. ft.
11	Provided footprint for evapotranspiration [Line 5 + Line 10]					2626	sq. ft.

Volume Retention Performance Standard

12	Is Line 11 ≥ Line 4?	Volume Retention Performance Standard is Met	
13	Fraction of the performance standard met through the BMP footprint and/or landscaping [Line 11/Line 4]	4.94	
14	Target Volume Retention [Line 10 from Worksheet B.5.2]	19	cu. ft.
15	Volume retention required from other site design BMPs [(1-Line 13) x Line 14]	-74.86	cu. ft.

Site Design BMP

	Identification	Site Design Type	Credit	
16	1			cu. ft.
	2			cu. ft.
	3			cu. ft.
	4			cu. ft.
	5			cu. ft.
	Sum of volume retention benefits from other site design BMPs (e.g. trees; rain barrels etc.). [sum of Line 16 Credits for Id's 1 to 5] Provide documentation of how the site design credit is calculated in the PDP SWQMP.		0	cu. ft.
17	Is Line 16 ≥ Line 15?	Volume Retention Performance Standard is Met		

DMA 6- BMP 4 (BIO-FILTRATION)

Design Capture Volume		Worksheet B.2-1		
1	85th percentile 24-hr storm depth from Figure B.1-1	d=	0.55	inches
2	Area tributary to BMP (s)	A=	0.79	acres
3	Area weighted runoff factor (estimate using Appendix B.1.1 and B.2.1)	C=	0.59	unitless
4	Trees Credit Volume Note: In the SWQMP list the number of trees, size of each tree, amount of soil volume installed for each tree, contributing area to each tree and the inlet opening dimension for each tree.	TCV=	0	cubic-feet
5	Rain barrels Credit Volume Note: In the SWQMP list the number of rain barrels, size of each rain barrel and the use of the captured storm water runoff.	RCV=	0	cubic-feet
6	Calculate DCV = (3630 x C x d x A) – TCV - RCV	DCV=	928	cubic-feet

<u>BMP 6 (DMA 4) - C runoff Factor Calculations:</u>

C hardscape = 0.90

C landscape = 0.10

Total Area = 34,303 sf

Pervious Area = 13,159 sf

Impervious Area = 21,144 sf

Weighted Area = (13,159 x 0.10) + (21,144 x 0.90) = 20345.5 sf

C = weighted area / total area

C = 20345.5 / 34,303

C = 0.59

The City of SAN DIEGO	Project Name	Southwest Park	
	BMP ID	BMP 4 (Biofiltration)	
Sizing Method for Pollutant Removal Criteria		**Worksheet B.5-1**	
1	Area draining to the BMP	34303	sq. ft.
2	Adjusted runoff factor for drainage area (Refer to Appendix B.1 and B.2)	0.59	
3	85th percentile 24-hour rainfall depth	0.55	inches
4	Design capture volume [Line 1 x Line 2 x (Line 3/12)]	928	cu. ft.
BMP Parameters			
5	Surface ponding [6 inch minimum, 12 inch maximum]	6	inches
6	Media thickness [18 inches minimum], also add mulch layer and washed ASTM 33 fine aggregate sand thickness to this line for sizing calculations	18	inches
7	Aggregate storage (also add ASTM No 8 stone) above underdrain invert (12 inches typical) – use 0 inches if the aggregate is not over the entire bottom surface area	9	inches
8	Aggregate storage below underdrain invert (3 inches minimum) – use 0 inches if the aggregate is not over the entire bottom surface area	3	inches
9	Freely drained pore storage of the media	0.2	in/in
10	Porosity of aggregate storage	0.4	in/in
11	Media filtration rate to be used for sizing (maximum filtration rate of 5 in/hr. with no outlet control; if the filtration rate is controlled by the outlet use the outlet controlled rate (includes infiltration into the soil and flow rate through the outlet structure) which will be less than 5 in/hr.)	5	in/hr.
Baseline Calculations			
12	Allowable routing time for sizing	6	hours
13	Depth filtered during storm [Line 11 x Line 12]	30	inches
14	Depth of Detention Storage [Line 5 + (Line 6 x Line 9) + (Line 7 x Line 10) + (Line 8 x Line 10)]	14.4	inches
15	Total Depth Treated [Line 13 + Line 14]	44.4	inches
Option 1 – Biofilter 1.5 times the DCV			
16	Required biofiltered volume [1.5 x Line 4]	1391	cu. ft.
17	Required Footprint [Line 16/ Line 15] x 12	376	sq. ft.
Option 2 - Store 0.75 of remaining DCV in pores and ponding			
18	Required Storage (surface + pores) Volume [0.75 x Line 4]	696	cu. ft.
19	Required Footprint [Line 18/ Line 14] x 12	580	sq. ft.
Footprint of the BMP			
20	BMP Footprint Sizing Factor (Default 0.03 or an alternative minimum footprint sizing factor from Line 11 in Worksheet B.5-4)	0.03	
21	Minimum BMP Footprint [Line 1 x Line 2 x Line 20]	607	sq. ft.
22	Footprint of the BMP = Maximum(Minimum(Line 17, Line 19), Line 21)	607	sq. ft.
23	Provided BMP Footprint	2130	sq. ft.
24	Is Line 23 ≥ Line 22?	**Yes, Performance Standard is Met**	

The City of SAN DIEGO	Project Name	Southwest Park	
	BMP ID	BMP 4 (Biofiltration)	
Sizing Method for Volume Retention Criteria		**Worksheet B.5-2**	
1	Area draining to the BMP	34303	sq. ft.
2	Adjusted runoff factor for drainage area (Refer to Appendix B.1 and B.2)	0.59	
3	85th percentile 24-hour rainfall depth	0.55	inches
4	Design capture volume [Line 1 x Line 2 x (Line 3/12)]	928	cu. ft.
Volume Retention Requirement			
5	Measured infiltration rate in the DMA Note: When mapped hydrologic soil groups are used enter 0.10 for NRCS Type D soils and for NRCS Type C soils enter 0.30 When in no infiltration condition and the actual measured infiltration rate is unknown enter 0.0 if there are geotechnical and/or groundwater hazards identified in Appendix C or enter 0.05	0	in/hr.
6	Factor of safety	2	
7	Reliable infiltration rate, for biofiltration BMP sizing [Line 5 / Line 6]	0	in/hr.
8	Average annual volume reduction target (Figure B.5-2) When Line 7 > 0.01 in/hr. = Minimum (40, 166.9 x Line 7 +6.62) When Line 7 ≤ 0.01 in/hr. = 3.5%	3.5	%
9	Fraction of DCV to be retained (Figure B.5-3) When Line 8 > 8% = $0.0000013 \times \text{Line } 8^3 - 0.000057 \times \text{Line } 8^2 + 0.0086 \times \text{Line } 8 - 0.014$ When Line 8 ≤ 8% = 0.023	0.023	
10	Target volume retention [Line 9 x Line 4]	21	cu. ft.

The City of SAN DIEGO	Project Name	Southwest Park
	BMP ID	BMP 4 (Biofiltration Basin)

Volume Retention for No Infiltration Condition		Worksheet B.5-6	
1	Area draining to the biofiltration BMP	34303	sq. ft.
2	Adjusted runoff factor for drainage area (Refer to Appendix B.1 and B.2)	0.59	
3	Effective impervious area draining to the BMP [Line 1 x Line 2]	20239	sq. ft.
4	Required area for Evapotranspiration [Line 3 x 0.03]	607	sq. ft.
5	Biofiltration BMP Footprint	2130	sq. ft.

Landscape Area (must be identified on DS-3247)

		Identification	1	2	3	4	5
6	Landscape area that meet the requirements in SD-B and SD-F Fact Sheet (sq. ft.)		2130				
7	Impervious area draining to the landscape area (sq. ft.)		21144				
8	Impervious to Pervious Area ratio [Line 7/Line 6]		9.93	0.00	0.00	0.00	0.00
9	Effective Credit Area If (Line 8 >1.5, Line 6, Line 7/1.5]		2130	0	0	0	0
10	Sum of Landscape area [sum of Line 9 Id's 1 to 5]					2130	sq. ft.
11	Provided footprint for evapotranspiration [Line 5 + Line 10]					4260	sq. ft.

Volume Retention Performance Standard

12	Is Line 11 ≥ Line 4?	Volume Retention Performance Standard is Met	
13	Fraction of the performance standard met through the BMP footprint and/or landscaping [Line 11/Line 4]	7.02	
14	Target Volume Retention [Line 10 from Worksheet B.5.2]	21	cu. ft.
15	Volume retention required from other site design BMPs [(1-Line 13) x Line 14]	-126.42	cu. ft.

Site Design BMP

	Identification	Site Design Type	Credit	
16	1			cu. ft.
	2			cu. ft.
	3			cu. ft.
	4			cu. ft.
	5			cu. ft.
	Sum of volume retention benefits from other site design BMPs (e.g. trees; rain barrels etc.). [sum of Line 16 Credits for Id's 1 to 5] Provide documentation of how the site design credit is calculated in the PDP SWQMP.		0	cu. ft.
17	Is Line 16 ≥ Line 15?	Volume Retention Performance Standard is Met		

25TH ST., 27TH ST., & GROVE ST. - GREEN STREET EXEMPTION

BMP Applicability and Selection for Green Street Exemption	Form J-1
Project Identification	
Project Name: Southwest Park	
Permit Application Number:	Date:
Project Characterization and Selection Synopsis	

The purpose of this form is to guide the selection of BMPs, given project specific constraints to meet the Green Streets exemption as defined in Appendix J.2 of the BMP Design Manual. In order to qualify for a PDP exemption, the project must incorporate all applicable Green Street BMP elements described in Appendix J.2, based on the applicability guidance provided in Appendix J.2.

Complete the sections below providing detailed justification for each selection.

Step 1: Does this project include retrofitting or redevelopment of an existing alley, street, or roadway criteria? Exemptions do not apply for projects that construct new alleys, streets, or roadways. See Appendix J for additional guidance on distinguishing between redevelopment of a street and new development.

☑ Yes ☐ No (if No is selected, the Green Street exemption is not applicable)

Provide a brief overview of the project, key details, and site-specific opportunities and constraints:
The project improvements include street improvements, sidewalk, and landscape.

Step 2: Complete the BMP-specific applicability checklists on the following pages and attach them to this form. Complete forms for all BMPs, including those that were used and those that were not used.

Step 3: Summarize the BMP(s) that were selected through the guidance process (Select all that apply):

BMP Type	Applicable?	Used?	Summary of justification for Inclusion or Finding of Non-applicability
Vegetated Swales	☐	☐	Reverse curb outlet and sidewalk to drain to sidewalk planter instead.
Sidewalk Planters	☐	☑	Reverse curb outlet and sidewalk to drain to sidewalk planter.
Curb Extensions	☑	☐	Curb extensions not permitted. Reverse curb outlet and sidewalk to drain to sidewalk planter instead
Permeable Surfaces	☐	☐	Reverse curb outlet and sidewalk to drain to sidewalk planter instead
Green Gutters	☐	☐	Reverse curb outlet and sidewalk to drain to sidewalk planter instead
Rain Gardens	☐	☐	Reverse curb outlet and sidewalk to drain to sidewalk planter instead.
Trees	☑	☐	Trees are proposed along project frontage but are not used to treat stormwater
Other_____	☐	☐	

Form J-1 Page 2 of 8: Vegetated Swale

Brief Description: Vegetated Swales are shallow, open channels that are designed to remove storm water pollutants by physically straining/filtering runoff through vegetation in the channel.

Site Type (Check all that apply):	Street Type	Rating[1]	Present in Project?
	Residential Streets	◉	☐
	Commercial Street/ Business District	○	☐
	Collector Street	◉	☑
	Arterial and Boulevard	◉	☐
	Alleys	○	☐
	Parking Areas	◉	☐

Key Opportunities for Vegetated Swales (Check all that apply):		
	Parkway strips	☑
	Medians	☐
	Long, mostly continuous space	☑
	Other (must justify below)	☐

Site-Specific Factors (Check all that apply):	Favorable Conditions for Vegetated Swales	
	Slope > 1% and <3%	☑
	Conveying run-on to a site	☐
	Infiltration is partially feasible or not feasible	☐
	Long continuous segments available	☑
	More parkway width	☑
	Unfavorable Conditions for Vegetated Swales	
	Available width is < 8 feet	☑
	Frequent driveway interruption	☐
	ROW width too limited	☐

Summary of Findings:

Were Vegetated Swales determined to be applicable as part of the Green Streets BMP plan?	If yes, were they used?
☐ Yes ☑ No	☐ Yes ☐ No

Provide discussion/justifications for selections and decisions above:
the parkway width is not wide enough for a vegetated swale.

[1] ● High applicability within this category, however may still be limited by site-specific factors
◉ Generally applicable in this category; largely dependent on site-specific factors
○ Limited applicability within this category; may still be applicable in some cases; should be considered

Form J-1 Page 3 of 8: Sidewalk Planters

Brief Description: A planter imbedded in the sidewalk designed to manage storm water runoff from the adjacent roadway and sidewalk.

	Street Type	Rating[2]	Present in Project?
Site Type (Check all that apply):	Residential Streets	◉	☐
	Commercial Street/ Business District	◉	☐
	Collector Street	●	☑
	Arterial and Boulevard	●	☐
	Alleys	○	☐
	Parking Areas	◉	☐
Key Opportunities for Sidewalk Planters (Check all that apply):	Parkway strips		☑
	Medians		☐
	Between driveways		☐
	Other (must justify below)		☐
Site-Specific Factors (Check all that apply):	Favorable Conditions for Sidewalk Planters		
	Slope <4%		☑
	Wide sidewalks		☑
	More parkway width		☐
	Unfavorable Conditions for Sidewalk Planters		
	Conflicts with car egress		☑
	ROW width too limited		☐

Summary of Findings:

Were Sidewalk Planters determined to be applicable as part of the Green Streets BMP plan?	If yes, were they used?
☑ Yes ☐ No	☑ Yes ☐ No

Provide discussion/justifications for selections and decisions above:

The city requires parking access on the streets which requires contiguous sidewalk with curb. We propose to use reverse curb outlets and to grade the sidewalks back toward the landscaped planters.

[2] ● High applicability within this category, however may still be limited by site-specific factors
◉ Generally applicable in this category; largely dependent on site-specific factors
○ Limited applicability within this category; may still be applicable in some cases; should be considered

Form J-1 Page 4 of 8: Curb Extensions

Brief Description: Curb extensions expand the edge of the sidewalk into the roadway or parking area and allow storm water runoff to collect and infiltrate through a detention area of porous media.

Site Type (Check all that apply):	Street Type	Rating[3]	Present in Project?
	Residential Streets	●	☐
	Commercial Street/ Business District	●	☐
	Collector Street	⦿	☑
	Arterial and Boulevard	⦿	☐
	Alleys	○	☐
	Parking Areas	⦿	☐
Key Opportunities for Curb Extensions (Check all that apply):	Intersections		☐
	Parking area		☐
	Other (must justify below)		☐
Site-Specific Factors (Check all that apply):	Favorable Conditions for Curb Extensions		
	Slope <4%		☑
	Traffic calming needed		☐
	Unfavorable Conditions for Curb Extensions		
	Conflicts with bike lanes		☐
	Site distance issues at intersection		☐

Summary of Findings:

Were Curb Extensions determined to be applicable as part of the Green Streets BMP plan?	If yes, were they used?
☐ Yes ☑ No	☐ Yes ☑ No

Provide discussion/justifications for selections and decisions above:
Curb extensions are not permitted, alternate BMP's will be used.

[3] ● High applicability within this category, however may still be limited by site-specific factors
⦿ Generally applicable in this category; largely dependent on site-specific factors
○ Limited applicability within this category; may still be applicable in some cases; should be considered

Form J-1 Page 5 of 8: Permeable Surfaces

Brief Description: Permeable surfaces are pavement that allows for percolation through void spaces into subsurface layers.

Site Type (Check all that apply):	Street Type	Rating[4]	Present in Project?
	Residential Streets	●	☐
	Commercial Street/ Business District	●	☐
	Collector Street	⦿	☑
	Arterial and Boulevard	⦿	☐
	Alleys	●	☐
	Parking Areas	⦿	☐
Key Opportunities for Permeable Surfaces (Check all that apply):	Sidewalks		☑
	Parking strips		☑
	Shoulders		☑
	Low traffic roadways		☐
	Other (must justify below)		☐
Site-Specific Factors (Check all that apply):	Favorable Conditions for Permeable Surfaces		
	Slope < 2-3%		☑
	Conveying limited run-on to a site		☑
	Low traffic area		☐
	Unfavorable Conditions for Permeable Surfaces		
	High traffic area		☑
	Run-on has high sediment load		☐

Summary of Findings:

Were Permeable Surfaces determined to be applicable as part of the Green Streets BMP plan?	If yes, were they used?
☐ Yes ☑ No	☐ Yes ☑ No

Provide discussion/justifications for selections and decisions above:

[4] ● High applicability within this category, however may still be limited by site-specific factors
⦿ Generally applicable in this category; largely dependent on site-specific factors
○ Limited applicability within this category; may still be applicable in some cases; should be considered

Form J-1 Page 6 of 8: Green Gutters

Brief Description: Green Gutters are shallow and narrow strips of landscaping in a typical curb and gutter location with a lower elevation than the street gutter elevation to allow capture of storm water from the sidewalk and street.

Site Type (Check all that apply):	Street Type	Rating[5]	Present in Project?
	Residential Streets	○	☐
	Commercial Street/ Business District	◉	☐
	Collector Street	●	☑
	Arterial and Boulevard	●	☐
	Alleys	◉	☐
	Parking Areas	○	☐

Key Opportunities for Green Gutters (Check all that apply):		
	Parkway strips	☑
	Medians	☐
	Long, mostly continuous space	☑
	Other (must justify below)	☐

Site-Specific Factors (Check all that apply):	Favorable Conditions for Green Gutters	
	Slope > 1% and <3%	☑
	Conveying run-on to a site	☐
	Infiltration is partially feasible or not feasible	☐
	Long continuous segments available	☑
	Narrower spaces (as little as 2 to 3 feet)	☐
	Unfavorable Conditions for Green Gutters	
	Frequent driveway interruption	☑
	ROW width too limited	☐

Summary of Findings:

Were Green Gutters determined to be applicable as part of the Green Streets BMP plan?	If yes, were they used?
☐ Yes ☑ No	☐ Yes ☑ No

Provide discussion/justifications for selections and decisions above:
Concrete curb and gutter will be used to convey stormwater to curb extension planter.

[5] ● High applicability within this category, however may still be limited by site-specific factors
◉ Generally applicable in this category; largely dependent on site-specific factors
○ Limited applicability within this category; may still be applicable in some cases; should be considered

Form J-1 Page 7 of 8: Rain Gardens

Brief Description: Rain Gardens are shallow detention basins with vegetation that temporarily store water to allow for infiltration of the stored volume. Rain Gardens could be bioretention or biofiltration with partial retention or a biofiltration BMP.

Site Type (Check all that apply):	Street Type	Rating[6]	Present in Project?
	Residential Streets	◉	☐
	Commercial Street/ Business District	◉	☐
	Collector Street	◉	☑
	Arterial and Boulevard	◉	☐
	Alleys	○	☐
	Parking Areas	●	☐

Key Opportunities for Rain Gardens (Check all that apply):		
	Irregularly shaped areas in ROW	☐
	Broad and flat areas	☐
	Other (must justify below)	☐

Site-Specific Factors (Check all that apply):	Favorable Conditions for Rain Gardens	
	Slope <2%	☑
	Infiltration is partially feasible or not feasible	☐
	Large area available	
	Unfavorable Conditions for Rain Gardens	
	Slope > 2%	☐
	ROW too limited	☑

Summary of Findings:

Were Rain Gardens determined to be applicable as part of the Green Streets BMP plan?	If yes, were they used?
☐ Yes ☑ No	☐ Yes ☑ No

Provide discussion/justifications for selections and decisions above:
Curb extension planter to be used instead.

[6] ● High applicability within this category, however may still be limited by site-specific factors
◉ Generally applicable in this category; largely dependent on site-specific factors
○ Limited applicability within this category; may still be applicable in some cases; should be considered

Form J-1 Page 8 of 8: Trees

Brief Description: Trees planted in the sidewalk right-of-way provide rainfall interception and infiltration benefits and typically supplement other storm water management tools.

Site Type (Check all that apply):	Street Type	Rating[7]	Present in Project?
	Residential Streets	●	☐
	Commercial Street/ Business District	⦿	☐
	Collector Street	⦿	☑
	Arterial and Boulevard	⦿	☐
	Alleys	⦿	☐
	Parking Areas	●	☐
Key Opportunities for Trees (Check all that apply):	Parkway strips		☑
	Medians		☐
	Irregularly shaped areas		☐
	Extra ROW on back side of sidewalk		☐
	Other (must justify below)		☐
Site-Specific Factors (Check all that apply):	Favorable Conditions for Trees		
	Located outside of clear zone		☑
	Infiltration is feasible		☑
	ROW not limiting		
	Unfavorable Conditions for Trees		
	Limited space for root growth		☐
	Clear zone issues		☑

Summary of Findings:

Were Trees determined to be applicable as part of the Green Streets BMP plan?	If yes, were they used?
☑ Yes ☐ No	☐ Yes ☑ No

Provide discussion/justifications for selections and decisions above:

Trees are proposed in the parkway but are not used to treat offsite drainage. Curb extensions are used instead.

[7] ● High applicability within this category, however may still be limited by site-specific factors
⦿ Generally applicable in this category; largely dependent on site-specific factors
○ Limited applicability within this category; may still be applicable in some cases; should be considered

THIS PAGE INTENTIONALLY LEFT BLANK FOR DOUBLE-SIDED PRINTING

Attachment 2
Backup for PDP Hydromodification Control Measures

This is the cover sheet for Attachment 2.

☐ Mark this box if this attachment is empty because the project is exempt from PDP hydromodification management requirements.

Project Name: Southwest Park

Indicate which Items are Included:

Attachment Sequence	Contents	Checklist
Attachment 2a	Hydromodification Management Exhibit (Required)	☑ Included See Hydromodification Management Exhibit Checklist.
Attachment 2b	Management of Critical Coarse Sediment Yield Areas (WMAA Exhibit is required, additional analyses are optional) See Section 6.2 of the BMP Design Manual.	☐ Exhibit showing project drainage boundaries marked on WMAA Critical Coarse Sediment Yield Area Map (Required) Optional analyses for Critical Coarse Sediment Yield Area Determination ☐ 6.2.1 Verification of Geomorphic Landscape Units Onsite ☐ 6.2.2 Downstream Systems Sensitivity to Coarse Sediment ☐ 6.2.3 Optional Additional Analysis of Potential Critical Coarse Sediment Yield Areas Onsite
Attachment 2c	Geomorphic Assessment of Receiving Channels (Optional) See Section 6.3.4 of the BMP Design Manual.	☑ Not Performed ☐ Included ☐ Submitted as separate stand-alone document
Attachment 2d	Flow Control Facility Design and Structural BMP Drawdown Calculations (Required) Overflow Design Summary for each structural BMP See Chapter 6 and Appendix G of the BMP Design Manual	☑ Included ☐ Submitted as separate stand-alone document

Project Name: Southwest Park

Use this checklist to ensure the required information has been included on the Hydromodification Management Exhibit:

The Hydromodification Management Exhibit must identify:

- ☑ Underlying hydrologic soil group
- ☑ Approximate depth to groundwater
- ☑ Existing natural hydrologic features (watercourses, seeps, springs, wetlands)
- ☐ Critical coarse sediment yield areas to be protected OR provide a separate map showing that the project site is outside of any critical coarse sediment yield areas
- ☑ Existing topography
- ☑ Existing and proposed site drainage network and connections to drainage offsite
- ☑ Proposed grading
- ☑ Proposed impervious features
- ☑ Proposed design features and surface treatments used to minimize imperviousness
- ☑ Point(s) of Compliance (POC) for Hydromodification Management
  Existing and proposed drainage boundary and drainage area to each POC (when necessary, create separate exhibits for pre-development and post-project conditions)
- ☑ Structural BMPs for hydromodification management (identify location, type of BMP, and size/detail).

LEGEND

- PROPERTY LINE
- EXISTING EASEMENT
- RIGHT-OF-WAY
- STREET CENTERLINE
- EXISTING STORM DRAIN
- DMA LIMITS
- DIRECTION OF FLOW
- PROPOSED BIOFILTRATION — BMP 1
- DMA DESIGNATION — DMA 1
- EXISTING CONTOUR — 260
- PROPOSED CONTOUR — 280
- PROPOSED STORM DRAIN
- PROPOSED PERVIOUS AREA
- PROPOSED IMPERVIOUS AREA
- GREEN STREET EXEMPTION

PROJECT SITE INFO

UNDERLYING HYDROLOGIC SOIL: D
APPROXIMATE DEPTH TO GROUNDWATER: 50 FT
EXISTING NATURAL HYDROLOGIC FEATURES (WATERCOURSES, SEEPS, SPRINGS, WETLANDS): NONE
CRITICAL COARSE SEDIMENT YIELD AREAS TO BE PROTECTED: NONE
EXISTING IMPERVIOUS AREA: 0 SF
DISTURBED AREA: 508,247 SF
PROPOSED/REPLACED IMPERVIOUS AREA: 101,345 SF
PROPOSED PERVIOUS AREA (INCLUDES LANDSCAPING): 400,902 SF

PERMANENT STORM WATER BMP NOTES

1 POLLUTANT CONTROL BMP (BF-1, BIOFILTRATION W/PARTIAL INFILTRATION)

SOURCE CONTROL BMP

SC-1 PREVENTION OF ILLICIT DISCHARGES INTO THE MS4
SC-2 STORM DRAIN STENCILING OR SIGNAGE
SC-5 PROTECT TRASH STORAGE AREAS FROM RAINFALL, RUN-ON, RUNOFF, AND WIND DISPERSAL

POLLUTANT CONTROL BMP SUMMARY TABLE

SOUTHWEST PARK DMA SUMMARY TABLE

DMA	TOTAL AREA (AC)	TOTAL AREA (SF)	PERVIOUS AREA (SF)	PERMEABLE PAVERS (SF)	IMPERVIOUS AREA - ROOFS, CONCRETE, ASPHALT (SF)	METHOD OF TREATMENT	TREATMENT REQUIRED BASIN AREA (SF) OR FLOWRATE (CFS)	HMP TREATMENT REQUIRED (SF)	TREATMENT PROVIDED BASIN AREA (SF) OR FLOWRATE (CFS)
1	3.22	140,331	111,905	0	28,426	Drains to BMPs 2(Bio-filtration)	1,103	2,714	3,126
2	4.96	216,244	179,958	0	36,286	Drains to BMPs 1(Bio-filtration)	1,520	1,981	2,452
3	1.55	67,587	62,897	0	4,690	Self Mitigating	-		-
4	0.58	25,327	6,268	0	19,059	Drains to BMP 3 (Bio-filtration)	771	984	1,313
5	0.41	17,932	17,932	0	0	Self Mitigating	-		-
6	0.79	34,303	13,159	0	21,144	Drains to BMP 4(Bio-filtration)	610	1,786	2,130
7	0.01	250	0	0	250	De Minimus	-	-	-
TOTAL	11.52	501,974	392,119	0	109,605				

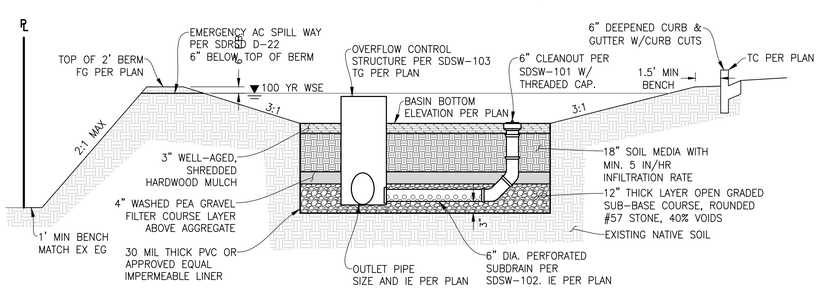

BIOFILTRATION BASIN DETAIL

NOT TO SCALE

50' 0' 25' 50'
SCALE: 1" = 50'

SOUTHWEST PARK

ATTACHMENT 1a □ 1□ - DRAINAGE MANAGEMENT AREAS (DMA) EXHIBIT MAP

FUSCOE ENGINEERING
6390 Greenwich Dr., Suite 170
San Diego, California 92122
tel 858.554.1500 • fax 858.597.0335
www.fuscoe.com

JOB NO. 1440-009
DRAWN BY: B.C.
SHEET 1 o□1

F:\Projects\1440\009_Support Files\Reports\SWQMP\Attachments\Attachment 1a&b - DMA Exhibit\DMA EXHIBIT.dwg (6/25/2020 4:16 PM) Plotted by: Brittany Couri

Attachment 2d

BMP Sizing Spreadsheet V3.0

Project Name:	Southwest Park
Project Applicant:	Schmidt Design Group
Jurisdiction:	Enter Jurisdiction
Parcel (APN):	634-120-09
Hydrologic Unit:	San Diego Bay
Rain Gauge:	Lindbergh
Total Project Area (sf):	502,275
Channel Susceptibility:	High

You created this PDF from an application that is not licensed to print to novaPDF printer (http://www.novapdf.com)

BMP Sizing Spreadsheet V3.0			
Project Name:	Southwest Park	Hydrologic Unit:	San Diego Bay
Project Applicant:	Schmidt Design Group	Rain Gauge:	Lindbergh
Jurisdiction:	Enter Jurisdiction	Total Project Area:	502,275
Parcel (APN):	634-120-09	Low Flow Threshold:	0.1Q2
BMP Name:	BMP 1	BMP Type:	Biofiltration
BMP Native Soil Type:	N/A - Impervious Liner	BMP Infiltration Rate (in/hr):	N/A

Areas Draining to BMP						HMP Sizing Factors	Minimum BMP Size
DMA Name	Area (sf)	Pre Project Soil Type	Pre-Project Slope	Post Project Surface Type	Area Weighted Runoff Factor (Table G.2-1)[1]	Surface Area	Surface Area (SF)
DMA 2 Pervious	111,905	D	Moderate	Landscape	0.1	0.05	560
DMA 2 Impervious	28,426	D	Moderate	Concrete	1.0	0.05	1421
						0	0
						0	0
						0	0
						0	0
						0	0
						0	0
						0	0
						0	0
						0	0
						0	0
						0	0
						0	0
						0	0
BMP Tributary Area	140,331					Minimum BMP Size	1981
						Proposed BMP Size*	2452

* Assumes standard configuration

Surface Ponding Depth	10.00	in
Bioretention Soil Media Depth	18.00	in
Filter Coarse	6.00	in
Gravel Storage Layer Depth	12	in
Underdrain Offset	3.0	in

Notes:

1. Runoff factors which are used for hydromodification management flow control (Table G.2-1) are different from the runoff factors used for pollutant control BMP sizing (Table B.1-1). Table references are taken from the San Diego Region Model BMP Design Manua

Describe the BMP's in sufficient detail in your PDP SWQMP to demonstrate the area, volume, and other criteria can be met within the constraints of the site.

BMP's must be adapted and applied to the conditions specific to the development project such as unstable slopes or the lack of available head.
Designated Staff have final review and approval authority over the project design.

This BMP Sizing Spreadsheet has been updated in conformance with the San Diego Region Model BMP Design Manual, April 2018. For questions or concerns please contact the jurisdiction in which your project is located.

You created this PDF from an application that is not licensed to print to novaPDF printer (http://www.novapdf.com)

BMP Sizing Spreadsheet V3.0			
Project Name:	Southwest Park	Hydrologic Unit:	San Diego Bay
Project Applicant:	Schmidt Design Group	Rain Gauge:	Lindbergh
Jurisdiction:	Enter Jurisdiction	Total Project Area:	502,275
Parcel (APN):	634-120-09	Low Flow Threshold:	0.1Q2
BMP Name:	BMP 2	BMP Type:	Biofiltration
BMP Native Soil Type:	N/A - Impervious Liner	BMP Infiltration Rate (in/hr):	N/A

Areas Draining to BMP						HMP Sizing Factors	Minimum BMP Size
DMA Name	Area (sf)	Pre Project Soil Type	Pre-Project Slope	Post Project Surface Type	Area Weighted Runoff Factor (Table G.2-1)[1]	Surface Area	Surface Area (SF)
DMA 1 Pervious	179,958	D	Moderate	Landscape	0.1	0.05	900
DMA 1 Impervious	36,286	D	Moderate	Concrete	1.0	0.05	1814
						0	0
						0	0
						0	0
						0	0
						0	0
						0	0
						0	0
						0	0
						0	0
						0	0
						0	0
						0	0
						0	0
BMP Tributary Area	216,244					Minimum BMP Size	2714
						Proposed BMP Size*	3126

* Assumes standard configuration

Surface Ponding Depth	10.00	in
Bioretention Soil Media Depth	18.00	in
Filter Coarse	6.00	in
Gravel Storage Layer Depth	12	in
Underdrain Offset	3.0	in

Notes:

1. Runoff factors which are used for hydromodification management flow control (Table G.2-1) are different from the runoff factors used for pollutant control BMP sizing (Table B.1-1). Table references are taken from the San Diego Region Model BMP Design Manua

Describe the BMP's in sufficient detail in your PDP SWQMP to demonstrate the area, volume, and other criteria can be met within the constraints of the site.

BMP's must be adapted and applied to the conditions specific to the development project such as unstable slopes or the lack of available head.
Designated Staff have final review and approval authority over the project design.

This BMP Sizing Spreadsheet has been updated in conformance with the San Diego Region Model BMP Design Manual, April 2018. For questions or concerns please contact the jurisdiction in which your project is located.

You created this PDF from an application that is not licensed to print to novaPDF printer (http://www.novapdf.com)

BMP Sizing Spreadsheet V3.0			
Project Name:	Southwest Park	Hydrologic Unit:	San Diego Bay
Project Applicant:	Schmidt Design Group	Rain Gauge:	Lindbergh
Jurisdiction:	Enter Jurisdiction	Total Project Area:	502,275
Parcel (APN):	634-120-09	Low Flow Threshold:	0.1Q2
BMP Name:	BMP 3	BMP Type:	Biofiltration
BMP Native Soil Type:	N/A - Impervious Liner	BMP Infiltration Rate (in/hr):	N/A

Areas Draining to BMP						HMP Sizing Factors	Minimum BMP Size
DMA Name	Area (sf)	Pre Project Soil Type	Pre-Project Slope	Post Project Surface Type	Area Weighted Runoff Factor (Table G.2-1)[1]	Surface Area	Surface Area (SF)
DMA 4 Pervious	6,268	D	Moderate	Landscape	0.1	0.05	31
DMA 4 Impervious	19,059	D	Moderate	Concrete	1.0	0.05	953
						0	0
						0	0
						0	0
						0	0
						0	0
						0	0
						0	0
						0	0
						0	0
						0	0
						0	0
						0	0
						0	0
BMP Tributary Area	25,327					Minimum BMP Size	984
						Proposed BMP Size*	1313

* Assumes standard configuration

Surface Ponding Depth	10.00	in
Bioretention Soil Media Depth	18.00	in
Filter Coarse	6.00	in
Gravel Storage Layer Depth	12	in
Underdrain Offset	3.0	in

Notes:

1. Runoff factors which are used for hydromodification management flow control (Table G.2-1) are different from the runoff factors used for pollutant control BMP sizing (Table B.1-1). Table references are taken from the San Diego Region Model BMP Design Manua

Describe the BMP's in sufficient detail in your PDP SWQMP to demonstrate the area, volume, and other criteria can be met within the constraints of the site.

BMP's must be adapted and applied to the conditions specific to the development project such as unstable slopes or the lack of available head.
Designated Staff have final review and approval authority over the project design.

This BMP Sizing Spreadsheet has been updated in conformance with the San Diego Region Model BMP Design Manual, April 2018. For questions or concerns please contact the jurisdiction in which your project is located.

You created this PDF from an application that is not licensed to print to novaPDF printer (http://www.novapdf.com)

BMP Sizing Spreadsheet V3.0			
Project Name:	Southwest Park	Hydrologic Unit:	San Diego Bay
Project Applicant:	Schmidt Design Group	Rain Gauge:	Lindbergh
Jurisdiction:	Enter Jurisdiction	Total Project Area:	502,275
Parcel (APN):	634-120-09	Low Flow Threshold:	0.1Q2
BMP Name:	BMP 4	BMP Type:	Biofiltration
BMP Native Soil Type:	N/A - Impervious Liner	BMP Infiltration Rate (in/hr):	N/A

Areas Draining to BMP						HMP Sizing Factors	Minimum BMP Size
DMA Name	Area (sf)	Pre Project Soil Type	Pre-Project Slope	Post Project Surface Type	Area Weighted Runoff Factor (Table G.2-1)[1]	Surface Area	Surface Area (SF)
DMA 6 Pervious	13,159	D	Moderate	Landscape	0.1	0.05	66
DMA 6 Impervious	21,144	D	Moderate	Concrete	1.0	0.05	1057
						0	0
						0	0
						0	0
						0	0
						0	0
						0	0
						0	0
						0	0
						0	0
						0	0
						0	0
						0	0
						0	0
BMP Tributary Area	34,303					Minimum BMP Size	1123
						Proposed BMP Size*	2130

* Assumes standard configuration

Surface Ponding Depth	10.00	in
Bioretention Soil Media Depth	18.00	in
Filter Coarse	6.00	in
Gravel Storage Layer Depth	12	in
Underdrain Offset	3.0	in

Notes:

1. Runoff factors which are used for hydromodification management flow control (Table G.2-1) are different from the runoff factors used for pollutant control BMP sizing (Table B.1-1). Table references are taken from the San Diego Region Model BMP Design Manua

Describe the BMP's in sufficient detail in your PDP SWQMP to demonstrate the area, volume, and other criteria can be met within the constraints of the site.

BMP's must be adapted and applied to the conditions specific to the development project such as unstable slopes or the lack of available head.
Designated Staff have final review and approval authority over the project design.

This BMP Sizing Spreadsheet has been updated in conformance with the San Diego Region Model BMP Design Manual, April 2018. For questions or concerns please contact the jurisdiction in which your project is located.

You created this PDF from an application that is not licensed to print to novaPDF printer (http://www.novapdf.com)

BMP Sizing Spreadsheet V3.0			
Project Name:	Southwest Park	Hydrologic Unit:	San Diego Bay
Project Applicant:	Schmidt Design Group	Rain Gauge:	Lindbergh
Jurisdiction:	Enter Jurisdiction	Total Project Area:	502,275
Parcel (APN):	634-120-09	Low Flow Threshold:	0.1Q2
BMP Name	BMP 2	BMP Type:	Biofiltration

DMA Name	Rain Gauge	Pre-developed Condition		Unit Runoff Ratio (cfs/ac)	DMA Area (ac)	Orifice Flow - $\%Q_2$ (cfs)	Orifice Area (in^2)
		Soil Type	Slope				
DMA 1 Pervious	Lindbergh	D	Moderate	0.437	4.131	0.181	**2.63**
DMA 1 Impervious	Lindbergh	D	Moderate	0.437	0.833	0.036	**0.53**

3.58	0.217	3.16	2.01
Max Orifice Head (feet)	**Max Tot. Allowable Orifice Flow (cfs)**	**Max Tot. Allowable Orifice Area (in^2)**	**Max Orifice Diameter (in)**

0.203	0.215	3.14	2.000
Average outflow during surface drawdown (cfs)	Max Orifice Outflow (cfs)	Actual Orifice Area (in^2)	Selected Orifice Diameter (in)

Drawdown (Hrs)	3.6

You created this PDF from an application that is not licensed to print to novaPDF printer (http://www.novapdf.com)

BMP Sizing Spreadsheet V3.0			
Project Name:	Southwest Park	Hydrologic Unit:	San Diego Bay
Project Applicant:	Schmidt Design Group	Rain Gauge:	Lindbergh
Jurisdiction:	Enter Jurisdiction	Total Project Area:	502,275
Parcel (APN):	634-120-09	Low Flow Threshold:	0.1Q2
BMP Name	BMP 1	BMP Type:	Biofiltration

DMA Name	Rain Gauge	Pre-developed Condition		Unit Runoff Ratio (cfs/ac)	DMA Area (ac)	Orifice Flow - $\%Q_2$ (cfs)	Orifice Area (in^2)
		Soil Type	Slope				
DMA 2 Pervious	Lindbergh	D	Moderate	0.437	2.569	0.112	**1.64**
DMA 2 Impervious	Lindbergh	D	Moderate	0.437	0.653	0.029	**0.42**

3.58	0.141	2.05	1.62
Max Orifice Head (feet)	**Max Tot. Allowable Orifice Flow (cfs)**	**Max Tot. Allowable Orifice Area (in^2)**	**Max Orifice Diameter (in)**

0.130	0.138	2.01	1.600
Average outflow during surface drawdown (cfs)	Max Orifice Outflow (cfs)	Actual Orifice Area (in^2)	Selected Orifice Diameter (in)

Drawdown (Hrs)	4.4

You created this PDF from an application that is not licensed to print to novaPDF printer (http://www.novapdf.com)

BMP Sizing Spreadsheet V3.0			
Project Name:	Southwest Park	Hydrologic Unit:	San Diego Bay
Project Applicant:	Schmidt Design Group	Rain Gauge:	Lindbergh
Jurisdiction:	Enter Jurisdiction	Total Project Area:	502,275
Parcel (APN):	634-120-09	Low Flow Threshold:	0.1Q2
BMP Name	BMP 3	BMP Type:	Biofiltration

DMA Name	Rain Gauge	Pre-developed Condition		Unit Runoff Ratio (cfs/ac)	DMA Area (ac)	Orifice Flow - $\%Q_2$ (cfs)	Orifice Area (in^2)
		Soil Type	Slope				
DMA 4 Pervious	Lindbergh	D	Moderate	0.437	0.144	0.006	**0.09**
DMA 4 Impervious	Lindbergh	D	Moderate	0.437	0.438	0.019	**0.28**

3.58	0.025	0.37	0.69
Max Orifice Head (feet)	**Max Tot. Allowable Orifice Flow (cfs)**	**Max Tot. Allowable Orifice Area (in^2)**	**Max Orifice Diameter (in)**

0.024	0.026	0.37	0.690
Average outflow during surface drawdown (cfs)	Max Orifice Outflow (cfs)	Actual Orifice Area (in^2)	Selected Orifice Diameter (in)

Drawdown (Hrs)	12.6

You created this PDF from an application that is not licensed to print to novaPDF printer (http://www.novapdf.com)

BMP Sizing Spreadsheet V3.0			
Project Name:	Southwest Park	Hydrologic Unit:	San Diego Bay
Project Applicant:	Schmidt Design Group	Rain Gauge:	Lindbergh
Jurisdiction:	Enter Jurisdiction	Total Project Area:	502,275
Parcel (APN):	634-120-09	Low Flow Threshold:	0.1Q2
BMP Name	BMP 4	BMP Type:	Biofiltration

DMA Name	Rain Gauge	Pre-developed Condition		Unit Runoff Ratio (cfs/ac)	DMA Area (ac)	Orifice Flow - $\%Q_2$ (cfs)	Orifice Area (in^2)
		Soil Type	Slope				
DMA 6 Pervious	Lindbergh	D	Moderate	0.437	0.302	0.013	**0.19**
DMA 6 Impervious	Lindbergh	D	Moderate	0.437	0.485	0.021	**0.31**

3.58	0.034	0.50	0.80
Max Orifice Head (feet)	**Max Tot. Allowable Orifice Flow (cfs)**	**Max Tot. Allowable Orifice Area (in^2)**	**Max Orifice Diameter (in)**

0.032	0.034	0.50	0.800
Average outflow during surface drawdown (cfs)	Max Orifice Outflow (cfs)	Actual Orifice Area (in^2)	Selected Orifice Diameter (in)

Drawdown (Hrs)	15.2

You created this PDF from an application that is not licensed to print to novaPDF printer (http://www.novapdf.com)

THIS PAGE INTENTIONALLY LEFT BLANK FOR DOUBLE-SIDED PRINTING

Attachment 3
Structural BMP Maintenance Information

This is the cover sheet for Attachment 3.

THIS PAGE INTENTIONALLY LEFT BLANK FOR DOUBLE-SIDED PRINTING

Project Name: Southwest Park

Indicate which Items are Included:

Attachment Sequence	Contents	Checklist
Attachment 3	Maintenance Agreement (Form DS-3247) (when applicable)	☐ Included ☑ Not applicable

WILL PROVIDE AT FINAL SUBMITTAL

Use this checklist to ensure the required information has been included in the Structural BMP Maintenance Information Attachment:

Attachment 3: For private entity operation and maintenance, Attachment 3 must include a Storm Water Management and Discharge Control Maintenance Agreement (Form DS-3247). The following information must be included in the exhibits attached to the maintenance agreement:

- ☐ Vicinity map
- ☐ Site design BMPs for which DCV reduction is claimed for meeting the pollutant control obligations.
- ☐ BMP and HMP location and dimensions
- ☐ BMP and HMP specifications/cross section/model
- ☐ Maintenance recommendations and frequency
- ☐ LID features such as (permeable paver and LS location, dim, SF).

Attachment 4
Copy of Plan Sheets Showing Permanent Storm Water BMPs

This is the cover sheet for Attachment 4.

TO BE COMPLETED DURING FINAL ENGINEERING

Project Name: Southwest Park

Use this checklist to ensure the required information has been included on the plans:

The plans must identify:

- ☐ Structural BMP(s) with ID numbers matching Form I-6 Summary of PDP Structural BMPs
- ☐ The grading and drainage design shown on the plans must be consistent with the delineation of DMAs shown on the DMA exhibit
- ☐ Details and specifications for construction of structural BMP(s)
- ☐ Signage indicating the location and boundary of structural BMP(s) as required by the City Engineer
- ☐ How to access the structural BMP(s) to inspect and perform maintenance
- ☐ Features that are provided to facilitate inspection (e.g., observation ports, cleanouts, silt posts, or other features that allow the inspector to view necessary components of the structural BMP and compare to maintenance thresholds)
- ☐ Manufacturer and part number for proprietary parts of structural BMP(s) when applicable
- ☐ Maintenance thresholds specific to the structural BMP(s), with a location-specific frame of reference (e.g., level of accumulated materials that triggers removal of the materials, to be identified based on viewing marks on silt posts or measured with a survey rod with respect to a fixed benchmark within the BMP)
- ☐ Recommended equipment to perform maintenance
- ☐ When applicable, necessary special training or certification requirements for inspection and maintenance personnel such as confined space entry or hazardous waste management
- ☐ Include landscaping plan sheets showing vegetation requirements for vegetated structural BMP(s)
- ☐ All BMPs must be fully dimensioned on the plans
- ☐ When proprietary BMPs are used, site specific cross section with outflow, inflow and model number shall be provided. Broucher photocopies are not allowed.

Attachment 5
Drainage Report

Attach project's drainage report. Refer to Drainage Design Manual to determine the reporting requirements.

THIS PAGE INTENTIONALLY LEFT BLANK FOR DOUBLE-SIDED PRINTING

Attachment 6
Geotechnical and Groundwater Investigation Report

Attach project's geotechnical and groundwater investigation report. Refer to Appendix C.4 to determine the reporting requirements.

PRELIMINARY GEOTECHNICAL INVESTIGATION

SOUTHWESTERN PARK
SAN DIEGO, CALIFORNIA

GEOCON
INCORPORATED

GEOTECHNICAL
ENVIRONMENTAL
MATERIALS

PREPARED FOR

SCHMIDT DESIGN GROUP, INC.
SAN DIEGO, CALIFORNIA

MARCH 12, 2019
PROJECT NO. G2367-42-01

GEOCON
INCORPORATED
GEOTECHNICAL ■ ENVIRONMENTAL ■ MATERIALS

Project No. G2367-42-01
March 12, 2019

Schmidt Design Group Incorporated
1111 Sixth Avenue, Suite 500
San Diego, California 92101

Attention: Mr. JT Barr

Subject: PRELIMINARY GEOTECHNICAL INVESTIGATION
SOUTHWESTERN PARK
SAN DIEGO, CALIFORNIA

Dear Mr. Barr:

In accordance with your authorization, we are submitting the results of our preliminary geotechnical investigation for the proposed Southwestern Park project. The accompanying report presents the findings and conclusions from our study. Based on the results of our study, it is our opinion that the park can be constructed as proposed, provided the recommendations of this report are followed.

Should you have questions regarding this investigation, or if we may be of further service, please contact the undersigned at your convenience.

Very truly yours,

GEOCON INCORPORATED

Noel G. Borja	Rodney C. Mikesell	Garry W. Cannon
Senior Staff Engineer	GE 2533	CEG 2201
		RCE 56468

NGB:RCM:GWC:dmc

(e-mail) Addressee

REGISTERED PROFESSIONAL ENGINEER RODNEY C. MIKESELL No.2533 GEOTECHNICAL STATE OF CALIFORNIA

PROFESSIONAL GEOLOGIST GARRY WELLS CANNON NO. 2201 CERTIFIED ENGINEERING GEOLOGIST STATE OF CALIFORNIA

REGISTERED PROFESSIONAL ENGINEER GARRY WELLS CANNON No. C 056468 CIVIL STATE OF CALIFORNIA

6960 Flanders Drive ■ San Diego, California 92121-2974 ■ Telephone 858.558.6900 ■ Fax 858.558.6159

TABLE OF CONTENTS

1. PURPOSE AND SCOPE 1

2. SITE AND PROJECT DESCRIPTION 1

3. SOIL AND GEOLOGIC CONDITIONS 2
   - 3.1 Undocumented Fill (Qudf) 2
   - 3.2 Topsoil (Unmapped) 2
   - 3.3 Alluvium (Qal) 2
   - 3.4 Old Paralic Deposits 3

4. GROUNDWATER 3

5. GEOLOGIC HAZARDS 3
   - 5.1 Geologic Hazard Category 3
   - 5.2 Ground Rupture 3
   - 5.3 Seismicity 4
   - 5.4 Liquefaction 5
   - 5.5 Landslides 5
   - 5.6 Tsunamis and Seiches 5
   - 5.7 Flooding 6
   - 5.8 Liquefaction and Seismically Induced Settlement 6
   - 5.9 Landslides 6

6. CONCLUSIONS AND RECOMMENDATIONS 7
   - 6.1 General 7
   - 6.2 Excavation and Soil Characteristics 7
   - 6.3 Preliminary Grading Recommendations 9
   - 6.4 Subdrains 11
   - 6.5 Seismic Design Criteria 11
   - 6.6 Preliminary Foundation and Concrete Slabs-On-Grade Recommendations 12
   - 6.7 Retaining Walls and Lateral Loads 15
   - 6.8 Preliminary Flexible and Rigid Pavement Recommendations 17
   - 6.9 Storm Water Management 19
   - 6.10 Site Drainage and Moisture Protection 20
   - 6.11 Grading and Foundation Plan Review 20

LIMITATIONS AND UNIFORMITY OF CONDITIONS

MAPS AND ILLUSTRATIONS
- Figure 1, Vicinity Map
- Figure 2, Geologic Map
- Figure 3, Typical Wall/Column Footing Dimension Detail
- Figure 4, Retaining Wall Drainage Detail

APPENDIX A
- FIELD INVESTIGATION
- Figures A-1 – A-17, Logs of Trenches

TABLE OF CONTENTS (Concluded)

APPENDIX B
LABORATORY TESTING
Table B-I, Summary of Laboratory Maximum Dry Density and Optimum Moisture Content Test Results
Table B-II, Summary of Laboratory Direct Shear Test Results
Table B-III, Summary of Laboratory Expansion Index Test Results
Table B-IV, Summary of Laboratory Potential of Hydrogen (pH) and Resistivity Test Results
Table B-V, Summary of Laboratory Water-Soluble Sulfate Test Results
Table B-VI, Summary of Laboratory Chloride Test Results
Table B-VII, Summary of Laboratory Resistance Value (R-Value) Test Results
Figure B-1, Gradation Curves

APPENDIX C
STORM WATER MANAGEMENT RECOMMENDATIONS

APPENDIX D
RECOMMENDED GRADING SPECIFICATIONS

LIST OF REFERENCES

PRELIMINARY GEOTECHNICAL INVESTIGATION

1. PURPOSE AND SCOPE

This report presents the results of our preliminary geotechnical investigation for the proposed Southwestern Park project located south of Grove Avenue and east of 25th Street in San Diego, California (see *Vicinity Map*, Figure 1). The purpose of the investigation was to evaluate soil and geologic conditions that may impact the proposed development. This report provides recommendations relative to the geotechnical engineering aspects of developing the project as currently proposed based on the conditions encountered during this investigation.

The scope of our study included a field investigation, infiltration testing, engineering analyses, laboratory testing, and preparation of this report. The field investigation consisted of excavating seventeen exploratory trenches to evaluate the underlying soil and geologic conditions within the area of planned improvements. The infiltration testing consisted of performing two, constant-head hydraulic conductivity tests. The locations of the exploratory trenches and infiltration tests are shown the *Geologic Map*, Figure 2. We used a Google Earth image as a base map for Figure 2. Logs of exploratory trenches and a detailed discussion of the field investigation are presented in Appendix A.

We performed laboratory tests on selected soil samples obtained during the field investigation to evaluate pertinent physical properties for engineering analyses and to assist in providing recommendations for site grading and foundation design. Details of the laboratory testing and a summary of test results are presented in Appendix B.

The conclusions and recommendations presented herein are based on analyses of the data obtained from the field investigation, laboratory tests, and our experience with similar soil and geologic conditions.

2. SITE AND PROJECT DESCRIPTION

The Southwestern Park project is situated on approximately 12-acres of vacant property located in the Otay Mesa West area of San Diego, California. The site is bordered on the north by Grove Avenue, on the south by residential properties, on the west by 25th Street and Interstate 5, and on the east by 27th Street and residential properties at the northwest corner. Topographically, the site generally slopes from east to west with elevations of approximately 62 feet Mean Sea Level (MSL) in the southeastern portion and near 30 feet MSL along the western property margin.

The property is owned by the City of San Diego. Currently the site is vacant. A residential structure once occupied the north-central portion of the property based on review of 1953 photographs.

Residential properties also occupied the southeast corner of the site. The residential structures in the southeast corner appear to have been removed between 2009 and 2010.

Based on discussions with you and our understanding of the project, the site will be graded to construct a public park including a multi-sports lighted field, multi-purpose courts, children's play area, picnic shelter area, shade structures, parking lots, comfort station, security lighting, storm water facilities, and hardscape improvements. Project plans are currently being developed and the locations of specific structures and improvements have not yet been finalized. As such, this report is preliminary. Once development plans are available, Geocon should review the plans to check if further analyses and update reports will be required.

The locations and descriptions above are based on our field studies and understanding of the proposed project. If development plans differ significantly from those described herein, Geocon Incorporated should be contacted for review and possible revisions to this report.

3. SOIL AND GEOLOGIC CONDITIONS

Based on our observations and subsurface investigation, the site is underlain by undocumented fill, topsoil, alluvium, and old paralic deposits. The soil and geologic units are described below.

3.1 Undocumented Fill (Qudf)

We encountered undocumented fill in the southern portion of the property. The undocumented fill ranges from approximately 1-foot to 4.5 feet thick and contains concrete, wood, plastic, and pipe debris. The undocumented fill generally consists of loose, silty to clayey sand. Remedial grading of the undocumented fill soils will be required to support additional engineered fill and/or the planned improvements.

3.2 Topsoil (Unmapped)

We observed topsoil in a majority of the trenches across the site. The topsoil ranges from approximately 1.5 foot to 3 feet thick. The topsoil consists of loose, silty to clayey sand and sandy clay. Remedial grading of the topsoil will be required to support additional fill and/or the planned improvements.

3.3 Alluvium (Qal)

Alluvium underlies the undocumented fill and topsoil in the western half of the property and along the north side of the site. The alluvium has a thickness ranging from 2.5 to 9 feet. Based on laboratory tests results, the alluvium has a *medium* expansion potential (Expansion Index [EI] of 90 or less). The

alluvium is unsuitable, in its current condition, to support structural improvements and should be removed and replaced as compacted fill.

3.4 Old Paralic Deposits

Old paralic deposits were encountered underlying the undocumented fill, topsoil and alluvium in all of the trenches. These deposits generally consist of medium dense to dense, silty to clayey sand and stiff to hard, sandy clay. Old paralic deposits are considered suitable for support of additional engineered fill and planned improvements.

4. GROUNDWATER

We did not encounter groundwater during our investigation. Groundwater is expected to be greater than 50 feet below the existing ground surface. Although groundwater was not encountered, it is not uncommon for groundwater or seepage conditions to develop where none previously existed. Groundwater elevation is dependent on seasonal precipitation, irrigation, and land use, among other factors, and vary as a result. Proper surface drainage will be important to future performance of the project.

5. GEOLOGIC HAZARDS

5.1 Geologic Hazard Category

The City of San Diego Seismic Safety Study (2008), Sheet 6 defines the site as Hazard Category 52, defined as *Other Level Areas – gently sloping to steep terrain, favorable geologic structure, Low Risk.* Along the north side of the site Hazard Category 32 has been mapped. Hazard Category 32 is defined under Liquefaction as *Low Potential - fluctuating groundwater, minor drainages* exist along the northern property margin.

5.2 Ground Rupture

Based on the City of San Diego (2008), an unnamed fault is located approximately 1,200 feet north of the site trending in a north-south direction. This fault does not cross the property. No evidence of faulting was observed during our investigation. The USGS (2016) shows no mapped Quaternary faults crossing or trending toward the property. The site is not located within a currently established Alquist-Priolo Earthquake Fault Zone. The risk associated with ground rupture hazard is low due to the absence of active faults at the subject site.

Based on our review of geologic literature and experience with the soil and geologic conditions in the general area, it is our opinion that known active, potentially active, or inactive faults are not located at

the site. The risk associated with ground rupture hazard is low due to the absence of active faults at the subject site.

5.3 Seismicity

We performed a deterministic seismic hazard analysis using Risk Engineering (2015). Five known active faults within a search radius of 50 miles from the property. The nearest known active fault is the Newport-Inglewood/Rose Canyon Fault Zone, located approximately 4 miles west of the site. The Newport-Inglewood/Rose Canyon Fault Zone is the dominant source of potential ground motion. Earthquakes that might occur on the Newport-Inglewood/Rose Canyon Fault Zone or other faults within the southern California and northern Baja California area are potential generators of significant ground motion at the site. The estimated deterministic maximum earthquake magnitude and peak ground acceleration for the Newport-Inglewood/Rose Canyon Fault are 7.5 and 0.42g, respectively. Table 5.3.1 lists the estimated maximum earthquake magnitude and peak ground acceleration for the most dominant faults in relationship to the site location. We calculated peak ground acceleration (PGA) using Boore and Atkinson (2008), Campbell and Bozorgnia (2008), and Chiou and Youngs (2007) acceleration-attenuation relationships.

TABLE 5.3.1
DETERMINISTIC SPECTRA SITE PARAMETERS

Fault Name	Distance from Site (miles)	Maximum Earthquake Magnitude (Mw)	Peak Ground Acceleration		
			Boore-Atkinson NGA USGS 2008 (g)	Campbell-Bozorgnia NGA USGS 2008 (g)	Chiou-Youngs (2007) NGA USGS 2008 (g)
Newport-Inglewood/Rose Canyon	4	7.5	0.35	0.33	0.42
Rose Canyon	4	6.9	0.31	0.32	0.36
Coronado Bank	12	7.4	0.24	0.19	0.23
Palos Verdes/Coronado Bank	12	7.7	0.26	0.20	0.26
Elsinore	46	7.85	0.13	0.08	0.10

We performed a probabilistic seismic hazard analysis for the site using Risk Engineering (2015). The program assumes that the occurrence rate of earthquakes on each mapped Quaternary fault is proportional to the fault slip rate. The program accounts for earthquake magnitude as a function of fault rupture length. Site acceleration estimates are made using the earthquake magnitude and distance from the site to the rupture zone. The program also accounts for uncertainty in each of following: (1) earthquake magnitude, (2) rupture length for a given magnitude, (3) location of the rupture zone, (4) maximum possible magnitude of a given earthquake, and (5) acceleration at the site

from a given earthquake along each fault. By calculating the expected accelerations from considered earthquake sources, the program calculates the total average annual expected number of occurrences of site acceleration greater than a specified value. We utilized acceleration-attenuation relationships suggested by Boore and Atkinson (2008), Campbell and Bozorgnia (2008), and Chiou and Youngs (2007) in the analysis. Table 5.3.2 presents the site-specific probabilistic seismic hazard parameters including acceleration-attenuation relationships and the probability of exceedence.

TABLE 5.3.2
PROBABILISTIC SEISMIC HAZARD PARAMETERS

Probability of Exceedence	Peak Ground Acceleration		
	Boore-Atkinson NGA USGS 2008 (g)	Campbell-Bozorgnia NGA USGS 2008 (g)	Chiou-Youngs (2007) NGA USGS 2008 (g)
2% in a 50 Year Period	0.48	0.42	0.50
5% in a 50 Year Period	0.34	0.30	0.35
10% in a 50 Year Period	0.25	0.22	0.242

While listing peak accelerations is useful for comparison of potential effects of fault activity in a region, other considerations are important in seismic design, including frequency and duration of motion and soil conditions underlying the site. Seismic design of the structures should be evaluated in accordance with the California Building Code (CBC).

5.4 Liquefaction

The risk associated with soil liquefaction hazard and seismic settlement at the site is low due to the dense nature of the underlying old paralic deposits and recommended remedial grading.

5.5 Landslides

Based on our review of published geologic maps of the site vicinity, it is our opinion landslides are not present at the property or at a location that could impact the site.

5.6 Tsunamis and Seiches

The site is located over 3 miles from the coast, at elevations ranging from approximately 30 to 60 feet above MSL. Therefore, the potential for damage due to a tsunami (seismically-induced sea wave) is considered low.

The site is not adjacent to or downstream of any lakes or confined bodies of water and, therefore, the possibility of earthquake-induced flooding due to seiches or dam failures is considered low.

5.7 Flooding

The Federal Emergency Management Agency (FEMA 2012) locates the eastern half of the site within a Flood Zone X area, indicating a minimal risk to inundation by 100-year and 500-year floods. The western and northern portion of the site is within Zone AH, which is mapped as a special flood hazard area, and may be subject to flooding.

5.8 Liquefaction and Seismically Induced Settlement

The risk associated with soil liquefaction hazard and seismic settlement at the site is low due to the dense nature of the underlying old paralic deposits and recommended remedial grading.

5.9 Landslides

Based on our review of published geologic maps of the site vicinity, it is our opinion landslides are not present at the property or at a location that could impact the site.

6. CONCLUSIONS AND RECOMMENDATIONS

6.1 General

6.1.1 From a geotechnical engineering standpoint, it is our opinion that the site is suitable for the proposed improvements provided the recommendations presented herein are implemented in design and construction of the project.

6.1.2 The site is underlain by approximately 1 to 12 feet of surficial deposits consisting undocumented fil, topsoil, and alluvium overlying old paralic deposits. Remedial grading of the surficial deposits will be required in areas to receive structural fill or settlement-sensitive improvements.

6.1.3 We did not encounter groundwater at the time of our investigation. No subdrains will be required on the project, with the exception of subdrains for retaining walls (if any).

6.1.4 Planned structures can be supported on conventional shallow foundations with a slab-on-grade floor system bearing on properly compacted fill or old paralic deposits.

6.1.5 The risk associated with geologic hazards due to liquefaction, ground rupture, landslides, seiches and tsunamis is low.

6.1.6 With the exception of the possibility of strong seismic shaking, no significant geologic hazards were observed or are known to exist at the site or other locations that could adversely affect the proposed project.

6.1.7 It is our opinion that the proposed development will not destabilize or result in settlement of adjacent properties.

6.1.8 Subsurface conditions observed may be extrapolated to reflect general soil/geologic conditions; however, some variations in subsurface conditions between trench and boring locations should be anticipated.

6.2 Excavation and Soil Characteristics

6.2.1 Excavation of the undocumented fill and old paralic deposits should be possible with moderate to heavy effort using conventional heavy-duty equipment.

6.2.2 Based on the soil types encountered during our recent field investigation, the onsite soils is considered to be both *expansive* (EI greater than 20) and *non-expansive* (EI of 20 or less) as

defined by 2016 California Building Code (CBC) Section 1803.5.3. Table 6.2.1 presents soil classifications based on expansion index. The onsite soils at the locations sampled and tested possess a *very low* to *medium* expansion potential (EI of 90 or less).

TABLE 6.2.1
EXPANSION CLASSIFICATION BASED ON EXPANSION INDEX

Expansion Index (EI)	Expansion Classification	2016 CBC Expansion Classification
0 – 20	Very Low	Non-Expansive
21 – 50	Low	Expansive
51 – 90	Medium	
91 – 130	High	
Greater Than 130	Very High	

6.2.3 We performed laboratory tests on samples of the site soils to check the percentage of water-soluble sulfate content. Results are presented in Appendix B and indicate that the on-site soils tested possess "Not Applicable" to "Moderate" sulfate exposure to concrete structures as defined by 2016 CBC Section 1904 and ACI 318-14 Chapter 19. Table 6.2.2 presents a summary of concrete requirements set forth by 2016 CBC Section 1904 and ACI 318. We recommend ACI guidelines be followed in determining the type of concrete to be utilized on the project. Moderate sulfate exposure requires the use of 4,000 pounds per square inch (psi) concrete, the use of Type II cement, and a maximum water to cement ratio of 0.50. The presence of water-soluble sulfates is not a visually discernible characteristic; therefore, other soil samples from the site could yield different concentrations. Additionally, over time landscaping activities (i.e., addition of fertilizers and other soil nutrients) may affect the concentration.

TABLE 6.2.2
REQUIREMENTS FOR CONCRETE EXPOSED TO SULFATE-CONTAINING SOLUTIONS

Sulfate Exposure	Exposure Class	Water-Soluble Sulfate % by Weight	Cement Type	Maximum Water to Cement Ratio by Weight	Minimum Compressive Strength (psi)
Negligible	S0	0.00-0.10	I or II	--	2,500
Moderate	S1	0.10-0.20	II	0.50	4,000
Severe	S2	0.20-2.00	V	0.45	4,500
Very Severe	S3	> 2.00	V + pozzolan or slag	0.45	4,500

6.2.4 We performed laboratory tests on samples of soil to evaluate the corrosion potential to subsurface metal structures. The laboratory test results are presented in Table B-IV. The laboratory tests were performed in accordance with California Test Method No. 643. The test results indicated the on-site soil has a high corrosion potential with respect to buried metal pipes.

6.2.5 Geocon Incorporated does not practice in the field of corrosion engineering. Therefore, further evaluation by a corrosion engineer may be needed if improvements susceptible to corrosion are planned.

6.3 Preliminary Grading Recommendations

6.3.1 All grading should be performed in accordance with the *Recommended Grading Specifications* contained in Appendix D. Where the recommendations of Appendix D conflict with this section of the report, the recommendations of this section take precedence.

6.3.2 Prior to commencing grading, a preconstruction conference should be held at the site with the owner or developer, grading contractor, civil engineer, and geotechnical engineer in attendance. Special soil handling and/or the grading plans can be discussed at that time.

6.3.3 Grading should be performed in conjunction with the observation and compaction testing services of Geocon Incorporated. Fill soil should be observed on a full-time basis during placement and tested to check in-place dry density and moisture content.

6.3.4 Site preparation should begin with removal of all deleterious material and vegetation. The depth of removal should be such that soil exposed in cut areas or soil to be used for fill is relatively free of organic matter. Deleterious material generated during stripping and/or site demolition should be exported from the site.

6.3.5 Abandoned structures, foundations, and buried utilities should be removed and the subsequent depressions and/or trenches backfilled with properly compacted fill as part of the remedial grading.

6.3.6 Trash and debris are anticipated during remedial grading. Debris should be removed from excavated soils and not incorporated into compacted fill. Concrete can be utilized in the fills provided all rebar is removed, or cut flush to the concrete edge and placed in accordance with the recommendations below and in Appendix D.

6.3.7 In areas planned to receive structures (buildings, restrooms, and shade structures) surficial soils (undocumented fill, topsoil, and alluvium) should be removed to expose the old paralic deposits and replaced with properly compacted fill. The remedial grading should extend a horizontal distance of at least 5 feet outside of the building limits where possible. The actual extent of unsuitable soil removals will be evaluated in the field during grading by the geotechnical engineer and/or engineering geologist. The upper 3 feet of soil below finish pad grade should consist of soil with a *low* to *medium* expansive potential (EI of 90 or less).

6.3.8 In areas that will receive surface improvements (concrete hardscape, pavement), undocumented fill, topsoil, and alluvium should be removed expose the underlying old paralic deposits or to a depth of at least 5 feet below existing grade in fill areas or 5 feet below finish subgrade in cut areas and replaced with properly compacted fill. The remedial grading should extend at least 5 feet beyond the edge of the proposed improvements, where possible. The actual extent of unsuitable soil removals will be evaluated in the field during grading by the geotechnical engineer and/or engineering geologist. The upper 3 feet of soil below finish subgrade elevation should consist of soil with a *low* to *medium* expansive potential (EI of 90 or less).

6.3.9 It is recommended that excavations be observed during grading by a representative of Geocon Incorporated to assess that soil and geologic conditions do not differ significantly from those anticipated.

6.3.10 The site should be brought to final subgrade elevations with structural fill compacted in layers. In general, soils native to the site are suitable for re-use as fill if free from vegetation, debris and other deleterious material. Layers of fill should be no thicker than will allow for adequate bonding and compaction. Fill, including backfill and scarified ground surfaces, should be compacted to at least 90 percent of laboratory maximum dry density as determined by ASTM D 1557, at or slightly above optimum moisture content.

6.3.11 Imported fill (if necessary) should consist of granular soil with a *very low* to *low* expansion potential (EI of 50 or less) that is free of deleterious material or stones larger than 3 inches and should be compacted as recommended above. Geocon Incorporated should be notified of the import soil source and should perform laboratory testing prior to its arrival at the site to evaluate its suitability as fill soil.

6.4 Subdrains

6.4.1 Subdrains are not required for this project with the exception of subdrains for retaining walls.

6.5 Seismic Design Criteria

6.5.1 We used SEAOC (2018) to summarize site-specific design criteria obtained (Table 6.5.1) from the 2016 California Building Code (CBC; Based on the 2012 International Building Code [IBC] and ASCE 7-10), Chapter 16 Structural Design, Section 1613 Earthquake Loads. The short spectral response uses a period of 0.2 second. The building structure and improvements should be designed using a Site Class D. We evaluated the Site Class based our experience for the site subsurface soils and exploratory boring information in accordance with Section 1613.3.2 of the 2016 CBC, and Table 20.3-1 of ASCE 7-10. The values presented in Table 6.5.1 are for the risk-targeted maximum considered earthquake (MCE_R).

TABLE 6.5.1
2016 CBC SEISMIC DESIGN PARAMETERS

Parameter	Value	2016 CBC Reference
Site Class	D	Section 1613.3.2
MCE_R Ground Motion Spectral Response Acceleration – Class B (short), S_S	0.995g	Figure 1613.3.1(1)
MCE_R Ground Motion Spectral Response Acceleration – Class B (1 sec), S_1	0.375g	Figure 1613.3.1(2)
Site Coefficient, F_A	1.102	Table 1613.3.3(1)
Site Coefficient, F_V	1.649	Table 1613.3.3(2)
Site Class Modified MCE_R Spectral Response Acceleration (short), S_{MS}	1.097g	Section 1613.3.3 (Eqn 16-37)
Site Class Modified MCE_R Spectral Response Acceleration (1 sec), S_{M1}	0.619g	Section 1613.3.3 (Eqn 16-38)
5% Damped Design Spectral Response Acceleration (short), S_{DS}	0.731g	Section 1613.3.4 (Eqn 16-39)
5% Damped Design Spectral Response Acceleration (1 sec), S_{D1}	0.413g	Section 1613.3.4 (Eqn 16-40)

6.5.2 Table 6.5.2 presents additional seismic design parameters for projects located in Seismic Design Categories of D through F in accordance with ASCE 7-10 for the mapped maximum considered geometric mean (MCEG).

TABLE 6.5.2
2016 CBC SITE ACCELERATION DESIGN PARAMETERS

Parameter	Value	ASCE 7-10 Reference
Mapped MCE_G Peak Ground Acceleration, PGA	0.419g	Figure 22-7
Site Coefficient, F_{PGA}	1.081	Table 11.8-1
Site Class Modified MCE_G Peak Ground Acceleration, PGA_M	0.453g	Section 11.8.3 (Eqn 11.8-1)

6.5.3 Conformance to the criteria in Tables 6.5.1 and 6.5.2 for seismic design does not constitute any kind of guarantee or assurance that significant structural damage or ground failure will not occur if a large earthquake occurs. The primary goal of seismic design is to protect life, not to avoid all damage, since such design may be economically prohibitive.

6.6 Preliminary Foundation and Concrete Slabs-On-Grade Recommendations

6.6.1 Foundations for the structures should consist of continuous strip footings and/or isolated spread footings. Continuous footings should be at least 12 inches wide and extend at least 18 inches below lowest adjacent pad grade. Isolated spread footings should have a minimum width of 2 feet and should extend at least 18 inches below lowest adjacent pad grade. Concrete reinforcement for continuous footings should consist of at least four, No. 5 steel bars placed horizontally in the footings, two near the top and two near the bottom. The project structural engineer should design concrete reinforcement for the spread footings. A footing dimension detail is presented in Figure 3.

6.6.2 Prefabricated restroom structures can be supported on a concrete slab-on-grade. For geotechnical purposes, we recommend the slab be at least 8 inches thick and reinforced with No. 4 bars spaced 18-inches on center in both direction and placed at the slab mid-point. A thicker slab and/or increased reinforcement may be required for structural purposes. The structural engineer for the prefabricated restroom structure should provide the actual slab thickness and reinforcement required for structural support.

6.6.3 The minimum foundation dimensions and steel reinforcement recommendations presented above are based on soil characteristics only and are not intended to replace reinforcement required for structural considerations.

6.6.4 The minimum reinforcement recommended herein is based on soil characteristics and is not intended to replace reinforcement required for structural considerations.

6.6.5 The recommended allowable bearing capacity for foundations with minimum dimensions described herein is 2,000 pounds per square foot (psf). The allowable soil bearing pressure may be increased by an additional 300 psf and 500 psf for each additional foot of foundation width and depth, respectively, to a maximum allowable bearing capacity of 4,000 psf. The values presented herein are for dead plus live loads and may be increased by one-third when considering transient loads due to wind or seismic forces.

6.6.6 Settlement due to footing loads conforming to the above recommended allowable soil bearing pressures are expected to be less than 1-inch total and ¾-inch differential over a span of 40 feet.

6.6.7 Where buildings or other improvements are planned near the top of a slope steeper than 3:1 (horizontal:vertical), special foundations and/or design considerations are recommended due to the tendency for lateral soil movement to occur.

- For fill slopes less than 20 feet high or cut slopes regardless of height, building footings should be deepened such that the bottom outside edge of the footing is at least 7 feet horizontally from the face of the slope.

- For fill slopes greater than 20 feet high, foundations should be extended to a depth where the minimum horizontal distance is equal to H/3 (where H equals the vertical distance from the top of the fill slope to the base of the fill soil) with a minimum of 7 feet but need not exceed 40 feet. The horizontal distance is measured from the outer, deepest edge of the footing to the face of the slope. A post-tensioned slab and foundation system or mat foundation system can be used to help reduce potential foundation distress associated with slope creep and lateral fill extension. Specific design parameters or recommendations for either of these alternatives can be provided once the building location and fill slope geometry have been determined.

- Although other improvements, which are relatively rigid or brittle, such as concrete flatwork or masonry walls, may experience some distress if located near the top of a slope, it is generally not economical to mitigate this potential. It may be possible, however, to incorporate design measures which would permit some lateral soil movement without causing extensive distress. Geocon Incorporated should be consulted for specific recommendations.

6.6.8 Special subgrade presaturation is not deemed necessary prior to placing concrete; however, the exposed foundation and slab subgrade soil should be moisture conditioned, as necessary, to maintain a moist condition as would be expected in any such concrete placement.

6.6.9 Foundation excavations should be observed by a representative of Geocon Incorporated prior to the placement of reinforcing steel and concrete to check that the exposed soil

conditions are consistent with those anticipated and have been extended to appropriate bearing strata. If unexpected soil conditions are encountered, foundation modifications may be required.

6.6.10 Interior concrete slabs-on-grade should be at least 5 inches thick. Minimum slab reinforcement should consist of No. 4 steel, reinforcing bars placed 18 inches on center in both horizontal directions and positioned near the slab midpoint.

6.6.11 Slabs that may receive moisture-sensitive floor coverings or may be used to store moisture-sensitive materials should be underlain by a vapor retarder. The vapor retarder design should be consistent with the guidelines presented in the American Concrete Institute's (ACI) *Guide for Concrete Slabs that Receive Moisture-Sensitive Flooring Materials* (ACI 302.2R-06). In addition, the membrane should be installed in accordance with manufacturer's recommendations and ASTM requirements, and in a manner that prevents puncture. The project architect or developer should specify the vapor retarder based on the type of floor covering that will be installed and if the structure will possess a humidity-controlled environment.

6.6.12 The project foundation engineer, architect, and/or developer should determine the thickness of bedding sand below the slab. In general, 3 to 4 inches of sand bedding is typically used. Geocon should be contacted to provide recommendations if the bedding sand is thicker than 6 inches.

6.6.13 All exterior concrete flatwork not subject to vehicular traffic should be constructed in accordance with the following recommendations. Slab panels in excess of eight feet square should be reinforced with No. 3 steel bars spaced 24 inches center to center and positioned near the middle of the slab. All concrete flatwork should be provided with crack control joints to reduce and/or control shrinkage cracking. The project structural engineer should determine crack control spacing based on the slab thickness and intended usage. Criteria of the American Concrete Institute (ACI) should be taken into consideration when establishing crack control spacing. Subgrade soils for exterior slabs should be scarified, moisture conditioned, and recompacted to at least 90 percent of the maximum dry density just prior to placing concrete. The subgrade moisture and compaction should be checked by a representative of Geocon Incorporated prior to placing concrete.

6.6.14 The slab-on-grade dimensions and minimum reinforcement recommendations presented above are based on the upper 3 feet of soil below pad grade has an *low* to *medium* expansion potential (EI less than 90). The recommendations are not intended to be used in lieu of those required for structural purposes.

6.6.15 The recommendations of this report are intended to reduce the potential for cracking of slabs due to differential settlement of fills of varying thickness and expansive soils. However, even with the incorporation of the recommendations presented herein, foundations, stucco walls, and slabs-on-grade placed on such soil conditions may exhibit some cracking due to soil movement and/or shrinkage. The occurrence of concrete shrinkage cracks is independent of the supporting soil characteristics. Their occurrence may be reduced and/or controlled by: (1) limiting the slump of the concrete, (2) proper concrete placement and curing, and (3) by the placement of crack-control joints at periodic intervals, particularly where re-entrant slab corners occur.

6.6.16 Geocon Incorporated should be consulted to provide additional design parameters as required by the structural engineer.

6.7 Retaining Walls and Lateral Loads

6.7.1 Retaining walls that are allowed to rotate more than 0.001H (where H equals the height of the retaining portion of the wall) at the top of the wall and having a level backfill surface should be designed for an active soil pressure equivalent to the pressure exerted by a fluid density of 35 pcf. Where the backfill will be inclined at 2:1 (horizontal:vertical), an active soil pressure of 50 pcf is recommended. Expansive soil should not be used as backfill soil behind retaining walls. Soil placed for retaining wall backfill should have an Expansion Index less than 50.

6.7.2 Where walls are restrained from movement at the top, an additional uniform pressure of 7H psf (where H equals the height of the retaining wall portion of the wall in feet) should be added to the active soil pressure where the wall possesses a height of 8 feet or less and 12H where the wall is greater than 8 feet. For retaining walls subject to vehicular loads within a horizontal distance equal to two-thirds the wall height, a surcharge equivalent to two feet of fill soil should be added.

6.7.3 Soil contemplated for use as retaining wall backfill, including import materials, should be identified in the field prior to backfill. At that time Geocon Incorporated should obtain samples for laboratory testing to evaluate its suitability. Modified lateral earth pressures may be necessary if the backfill soil does not meet the required expansion index or shear strength. City or regional standard wall designs, if used, are based on a specific active lateral earth pressure and/or soil friction angle. In this regard, on-site soil or import soil to be used as backfill may or may not meet the values for standard wall designs. Geocon Incorporated should be consulted to assess the suitability of the on-site soil or import soil for use as wall backfill if standard wall designs will be used.

6.7.4 Unrestrained walls will move laterally when backfilled and loading is applied. The amount of lateral deflection is dependent on the wall height, the type of soil used for backfill, and loads acting on the wall. The wall designer should provide appropriate lateral deflection quantities for planned retaining walls structures, if applicable. These lateral values should be considered when planning types of improvements above retaining wall structures.

6.7.5 Retaining walls should be provided with a drainage system adequate to prevent the buildup of hydrostatic forces and should be waterproofed as required by the project architect. The use of drainage openings through the base of the wall (weep holes) is not recommended where the seepage could be a nuisance or otherwise adversely affect the property adjacent to the base of the wall. The above recommendations assume a properly compacted granular (EI $\leq$50) free-draining backfill soil with no hydrostatic forces or imposed surcharge load. A typical retaining wall drainage detail is presented on Figure 4. If conditions different than those described are expected, or if specific drainage details are desired, Geocon Incorporated should be contacted for additional recommendations.

6.7.6 In general, wall foundations having a minimum embedment depth and width of 1 foot may be designed for an allowable soil bearing pressure of 2,000 psf. The allowable soil bearing pressure may be increased by an additional 300 psf and 500 psf for each additional foot of foundation width and depth, respectively, to a maximum allowable bearing capacity of 4,000 psf. These values are for dead plus live loads and may be increased by one-third when considering transient loads due to wind or seismic forces.

6.7.7 The proximity of the foundation to the top of a slope steeper than 3:1 could impact the allowable soil bearing pressure. Therefore, Geocon Incorporated should be consulted where such a condition is anticipated. As a minimum, wall footings should be deepened such that the bottom outside edge of the footing is at least seven feet from the face of slope when located adjacent and/or at the top of descending slopes.

6.7.8 The structural engineer should determine the seismic design category for the project in accordance with Section 1613 of the CBC. If the project possesses a seismic design category of D, E, or F, retaining walls that support more than 6 feet of backfill should be designed with seismic lateral pressure in accordance with Section 1803.5.12 of the 2016 CBC. The seismic load is dependent on the retained height where H is the height of the wall, in feet, and the calculated loads result in pounds per square foot (psf) exerted at the base of the wall and zero at the top of the wall. A seismic load of 16H should be used for design. We used the peak ground acceleration adjusted for Site Class effects, PGA_M, of 0.453g calculated from ASCE 7-10 Section 11.8.3 and applied a pseudo-static coefficient of 0.33.

6.7.9 For resistance to lateral loads, a passive earth pressure equivalent to a fluid density of 300 pcf is recommended for footings or shear keys poured neat against properly compacted granular fill soils or undisturbed old paralic deposits. The passive pressure assumes a horizontal surface extending away from the base of the wall at least five feet or three times the surface generating the passive pressure, whichever is greater. The upper 12 inches of soil not protected by floor slabs or pavement should not be included in the design for lateral resistance. Where walls are planned adjacent to and/or on descending slopes, a passive pressure of 150 pcf should be used in design.

6.7.10 An allowable friction coefficient of 0.4 may be used for resistance to sliding between soil and concrete. This friction coefficient may be combined with the passive earth pressure when determining resistance to lateral loads.

6.8 Preliminary Flexible and Rigid Pavement Recommendations

6.8.1 Preliminary pavement design sections are provided below. Final pavement sections for the roadways and parking lots should be based on the R-Value of the subgrade soil encountered at final subgrade elevation. We expect the pavement sections will need to meet City of San Diego Schedule "J". We have assumed an R-Value between 0 and 9.9. Preliminary flexible pavement sections are presented in Table 6.8.1 for different street classifications. The actual street classification should be determined by the traffic or civil engineer.

TABLE 6.8.1
PRELIMINARY FLEXIBLE PAVEMENT SECTION
USING SCHEDULE J AND R-VALUE BETWEEN 0 AND 9.9.

Street Classification	Max ADT	Asphalt Concrete (inches)	Cemented Treated Base (inches)
Cul-De-Sac	200	3	8
Local (L.V.R.)	700	3	9.5
Local (Res.)	1,200	3	10.5
Local (Res.)	2,200	3	12,5

6.8.2 Asphalt concrete should conform to Section 203-6 of the *Standard Specifications for Public Works Construction* (Green Book). Cement treated base should conform to Section 301-3.3 of the Greenbook.

6.8.3 Prior to placing base material, the subgrade should be scarified, moisture conditioned and recompacted to a minimum of 95 percent relative compaction. The depth of compaction should be at least 12 inches. The base material should be compacted to at least 95 percent relative compaction. Asphalt concrete should be compacted to at least 95 percent maximum Hveem density.

6.8.4. Perimeter curbs adjacent to landscape areas should extend at least 6 inches below the bottom of the pavement aggregate base. In lieu of extending the perimeter curb, an impermeable line can be installed.

6.8.5 A rigid Portland cement concrete (PCC) pavement section should be placed in driveway entrance aprons and trash bin loading/storage areas. The concrete pad for trash truck areas should be large enough such that the truck wheels will be positioned on the concrete during loading. Based on City of San Diego Schedule "J", concrete pavement sections for subgrade soils with an R-Value between 0 and 9.9 should have the thickness indicated on Table 6.8.2.

TABLE 6.8.2
RIGID PAVEMENT RECOMMENDATIONS

Street Classification	Portland Cement Concrete (inches)
Cul-De-Sac	7
Local (L.V.R.)	7.5
Local (Res.)	7.5
Local (Res.)	7.5

6.8.6 The PCC pavement should be placed over subgrade soil that is compacted to a dry density of at least 95 percent of the laboratory maximum dry density near to slightly above optimum moisture content. This pavement section is based on a minimum concrete compressive strength of approximately 3,600 psi (pounds per square inch) which corresponds to a modulus of rupture of 600 psi.

6.8.7 A thickened edge or integral curb should be constructed on the outside of concrete slabs subjected to wheel loads. The thickened edge should be 1.2 times the slab thickness or a minimum thickness of 2 inches, whichever results in a thicker edge, and taper back to the recommended slab thickness 4 feet behind the face of the slab (e.g., a 7.5-inch-thick slab would have a 9.5-inch-thick edge). Reinforcing steel will not be necessary within the concrete for geotechnical purposes with the possible exception of dowels at construction joints as discussed herein.

6.8.8 To control the location and spread of concrete shrinkage cracks, crack-control joints (weakened plane joints) should be included in the design of the concrete pavement slab. Crack-control joints should not exceed 30 times the slab thickness with a maximum spacing of 15 feet for slabs greater than 6-inch-thick and should be sealed with an appropriate sealant to prevent the migration of water through the control joint to the subgrade materials.

6.8.9 To provide load transfer between adjacent pavement slab sections, a butt-type construction joint should be constructed. The butt-type joint should be thickened by at least 20 percent at the edge and taper back at least 4 feet from the face of the slab. As an alternative to the butt-type construction joint, dowelling can be used between construction joints for pavements of 7 inches or thicker. Dowels should consist of smooth, 1-inch-diameter reinforcing steel 14 inches long embedded a minimum of 6 inches into the slab on either side of the construction joint. Dowels should be located at the midpoint of the slab, spaced at 12 inches on center and lubricated to allow joint movement while still transferring loads. In addition, tie bars should be installed at the as recommended in Section 3.8.3 of the ACI guide (ACI 330R-08 *Guide for Design and Construction of Concrete Parking Lots*). The structural engineer should provide other alternative recommendations for load transfer.

6.8.10 Where trash bin enclosures are planned within asphalt paved areas, the pavement sections should consist of at least 7.5 inches of Portland cement concrete reinforced with No. 3 bars spaced at 24 inches in each horizontal direction. The concrete loading area should extend out such that both the front and rear wheels of the truck will be located on reinforced concrete pavement when loading and unloading.

6.9 Storm Water Management

6.9.1 If storm water management devices are not properly designed and constructed, there is a risk for distress to improvements and property located hydrologically down gradient or adjacent to these devices. Factors such as the amount of water being detained, its residence time, and soil permeability have an important effect on seepage transmission and the potential adverse impacts that may occur if the storm water management features are not properly designed and constructed. We have not performed a hydrogeological study at the site. If infiltration of storm water runoff into the subsurface occurs, downstream improvements may be subjected to seeps, springs, slope instability, raised groundwater, movement of foundations and slabs, or other undesirable impacts as a result of water infiltration.

6.9.2 We performed an infiltration study on the property. Based on the results of our study, full or partial infiltration may be infeasible due to presence of potentially compressible soils

and very slow infiltration characteristics. Stormwater management recommendations are provided in Appendix D.

6.10 Site Drainage and Moisture Protection

6.10.1 Adequate site drainage is critical to reduce the potential for differential soil movement, erosion and subsurface seepage. Under no circumstances should water be allowed to pond adjacent to footings. The site should be graded and maintained such that surface drainage is directed away from structures in accordance with 2016 CBC 1804.4 or other applicable standards. In addition, surface drainage should be directed away from the top of slopes into swales or other controlled drainage devices. Roof and pavement drainage should be directed into conduits that carry runoff away from the proposed or existing structures.

6.10.2 Underground utilities should be leak free. Utility and irrigation lines should be checked periodically for leaks, and detected leaks should be repaired promptly. Detrimental soil movement could occur if water is allowed to infiltrate the soil for prolonged periods of time.

6.10.3 Landscaping planters adjacent to paved areas are not recommended due to the potential for surface or irrigation water to infiltrate the pavement's subgrade and base course. Area drains to collect excess irrigation water and transmit it to drainage structures or impervious above-grade planter boxes can be used. In addition, where landscaping is planned adjacent to the pavement, construction of a cutoff wall along the edge of the pavement that extends at least 6 inches below the bottom of the base material should be considered.

6.11 Grading and Foundation Plan Review

6.11.1 Geocon Incorporated should review the grading and foundation plans for the project prior to final design submittal to determine if additional analysis and/or recommendations are required.

LIMITATIONS AND UNIFORMITY OF CONDITIONS

1. The firm that performed the geotechnical investigation for the project should be retained to provide testing and observation services during construction to provide continuity of geotechnical interpretation and to check that the recommendations presented for geotechnical aspects of site development are incorporated during site grading, construction of improvements, and excavation of foundations. If another geotechnical firm is selected to perform the testing and observation services during construction operations, that firm should prepare a letter indicating their intent to assume the responsibilities of project geotechnical engineer of record. A copy of the letter should be provided to the regulatory agency for their records. In addition, that firm should provide revised recommendations concerning the geotechnical aspects of the proposed development, or a written acknowledgement of their concurrence with the recommendations presented in our report. They should also perform additional analyses deemed necessary to assume the role of Geotechnical Engineer of Record.

2. The recommendations of this report pertain only to the site investigated and are based upon the assumption that the soil conditions do not deviate from those disclosed in the investigation. If any variations or undesirable conditions are encountered during construction, or if the proposed construction will differ from that anticipated herein, Geocon Incorporated should be notified so that supplemental recommendations can be given. The evaluation or identification of the potential presence of hazardous or corrosive materials was not part of the scope of services provided by Geocon Incorporated.

3. This report is issued with the understanding that it is the responsibility of the owner, or of his representative, to ensure that the information and recommendations contained herein are brought to the attention of the architect and engineer for the project and incorporated into the plans, and that the necessary steps are taken to see that the contractor and subcontractors carry out such recommendations in the field.

4. The findings of this report are valid as of the present date. However, changes in the conditions of a property can occur with the passage of time, whether they are due to natural processes or the works of man on this or adjacent properties. In addition, changes in applicable or appropriate standards may occur, whether they result from legislation or the broadening of knowledge. Accordingly, the findings of this report may be invalidated wholly or partially by changes outside our control. Therefore, this report is subject to review and should not be relied upon after a period of three years.

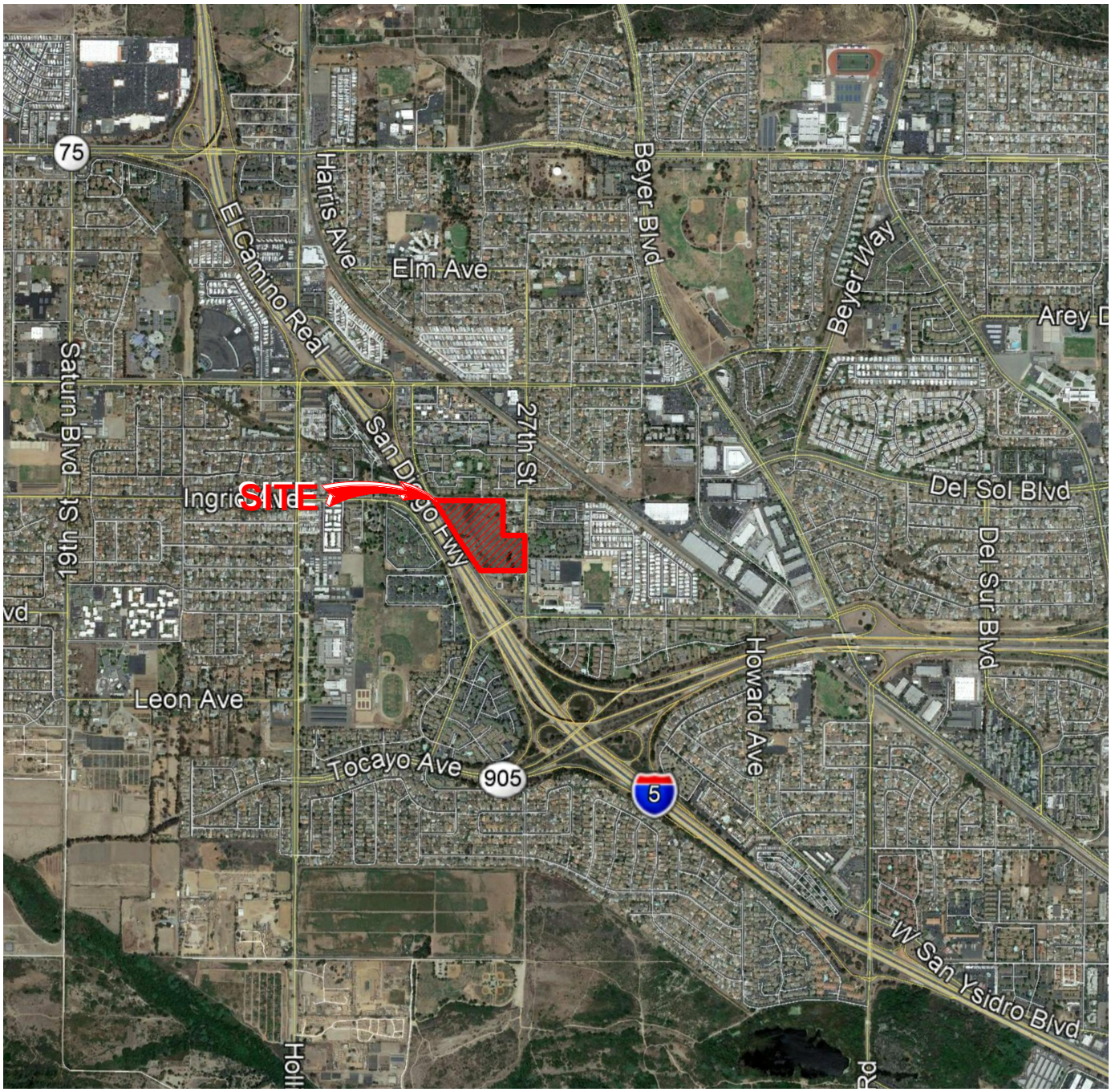

THE GEOGRAPHICAL INFORMATION MADE AVAILABLE FOR DISPLAY WAS PROVIDED BY GOOGLE EARTH SUBJECT TO A LICENSING AGREEMENT. THE INFORMATION IS FOR ILLUSTRATIVE PURPOSES ONLY IT IS NOT INTENDED FOR CLIENT S USE OR RELIANCE AND SHALL NOT BE REPRODUCED BY CLIENT. CLIENT SHALL INDEMNIFY DEFEND AND HOLD HARMLESS GEOCON FROM ANY LIABILITY INCURRED AS A RESULT OF SUCH USE OR RELIANCE BY CLIENT.

N

NO SCALE

VICINITY MAP

GEOCON
INCORPORATED
GEOTECHNICAL ■ ENVIRONMENTAL ■ MATERIALS
6960 FLANDERS DRIVE - SAN DIEGO, CALIFORNIA 92121 - 2974
PHONE 858 558-6900 - FAX 858 558-6159

SOUTHWESTERN PARK
SAN DIEGO, CALIFORNIA

NGB / CW		DSK/GTYPD	DATE 03 - 12 - 2019	PROJECT NO. G2367 - 42 - 01	FIG. 1

Plotted:03/11/2019 4:00PM | By:ALVIN LADRILLONO | File Location:Y:\1_GEOTECH\G2000\G2367-42-01\2019-03-12\DETAILS\G2367-42-01_Vicinity Map.dwg

SOUTHWESTERN PARK
SAN DIEGO, CALIFORNIA

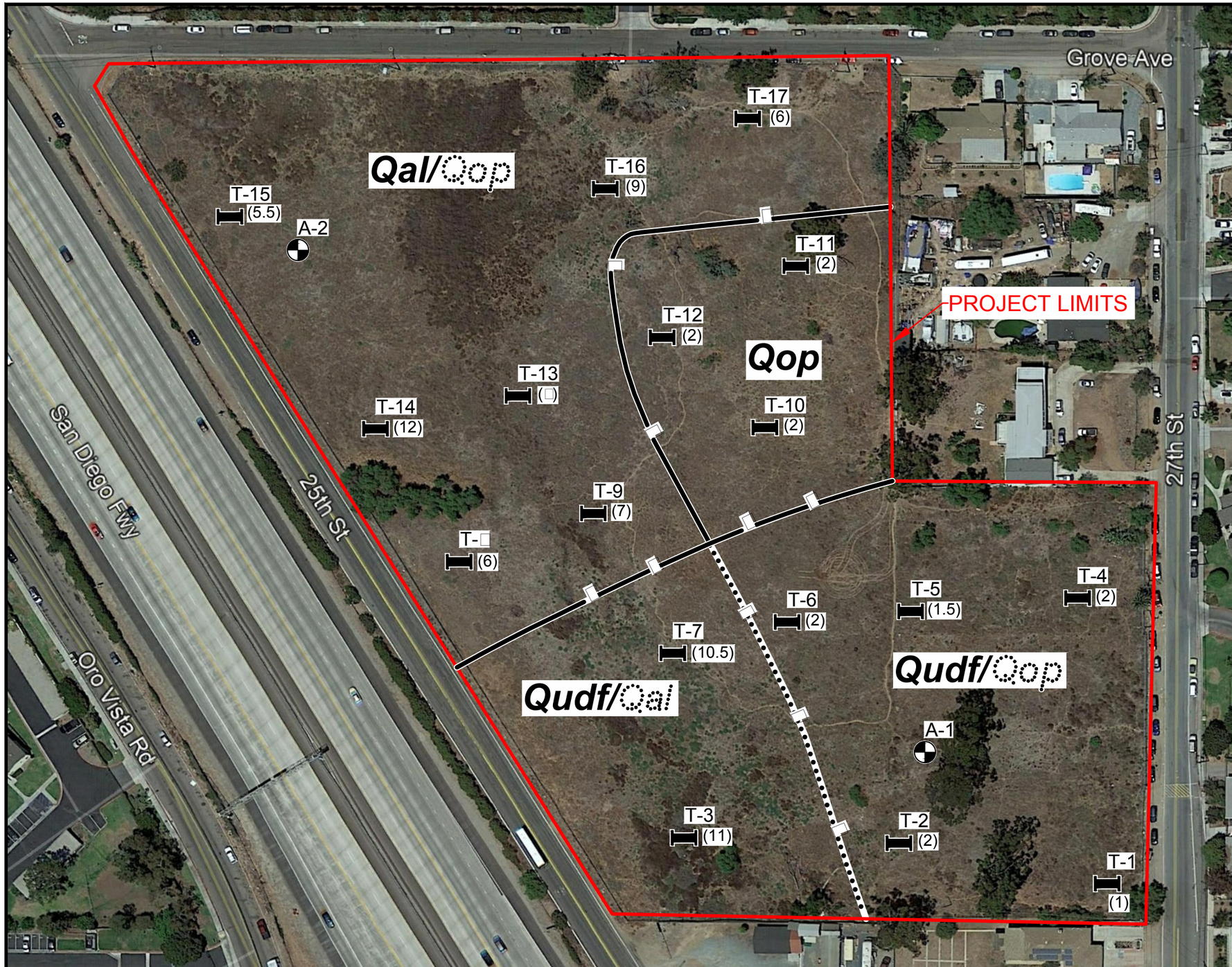

0' 100' 200'
SCALE 1"= 100' (On 11x17)

GEOCON LEGEND

Topsoil .....UNMAPPED/UNDIFFERIATED
Qudf .....UNDOCUMENTED FILL
Qal .....ALLUVIU (Dotted W□ere B□ried)
Qop .....OLD PARALIC DEPOSITS (Dotted W□ere B□ried)
T-17 .....APPROX. LOCATION OF EXPLORATORY TRENCH
A-2 .....APPROX. LOCATION OF INFILTRATION TEST
(12) .....DEPTH TO OLD PARALIC DEPOSITS
.....APPROX. LOCATION OF GEOLOGIC CONTACT
(Dotted W□ere B□ried□Q□eried W□ere Uncertain)

GEOCON
INCORPORATED
GEOTECHNICAL ■ ENVIRONMENTAL ■ MATERIALS
6960 FLANDERS DRIVE - SAN DIEGO, CALIFORNIA 92121 - 2974
PHONE 858 558-6900 - FAX 858 558-6159

PROJECT NO. G2367 - 42 - 01
FIGURE 2
DATE 03 - 12 - 2019

GEOLOGIC MAP

THE GEOGRAPHICAL INFORMATION MADE AVAILABLE FOR DISPLAY WAS PROVIDED BY GOOGLE EARTH□ SUBJECT TO A LICENSING AGREEMENT. THE INFORMATION IS FOR ILLUSTRATIVE PURPOSES ONLY□IT IS NOT INTENDED FOR CLIENT'S USE OR RELIANCE AND SHALL NOT BE REPRODUCED BY CLIENT. CLIENT SHALL INDEMNIFY□DEFEND AND HOLD HARMLESS GEOCON FROM ANY LIABILITY INCURRED AS A RESULT OF SUCH USE OR RELIANCE BY CLIENT.

Plotted:03/11/2019 3:32PM | By:ALVIN LADRILLONO | File Location:Y:\PROJECTS\G2367-42-01 So□t□we□tern Par□\SHEETS\G2367-42-01 GeologicMAP.dwg

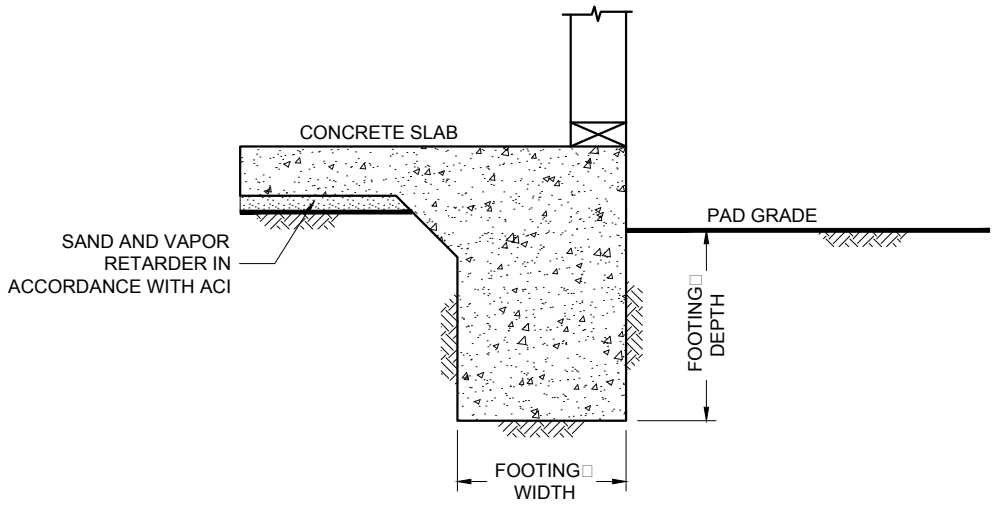

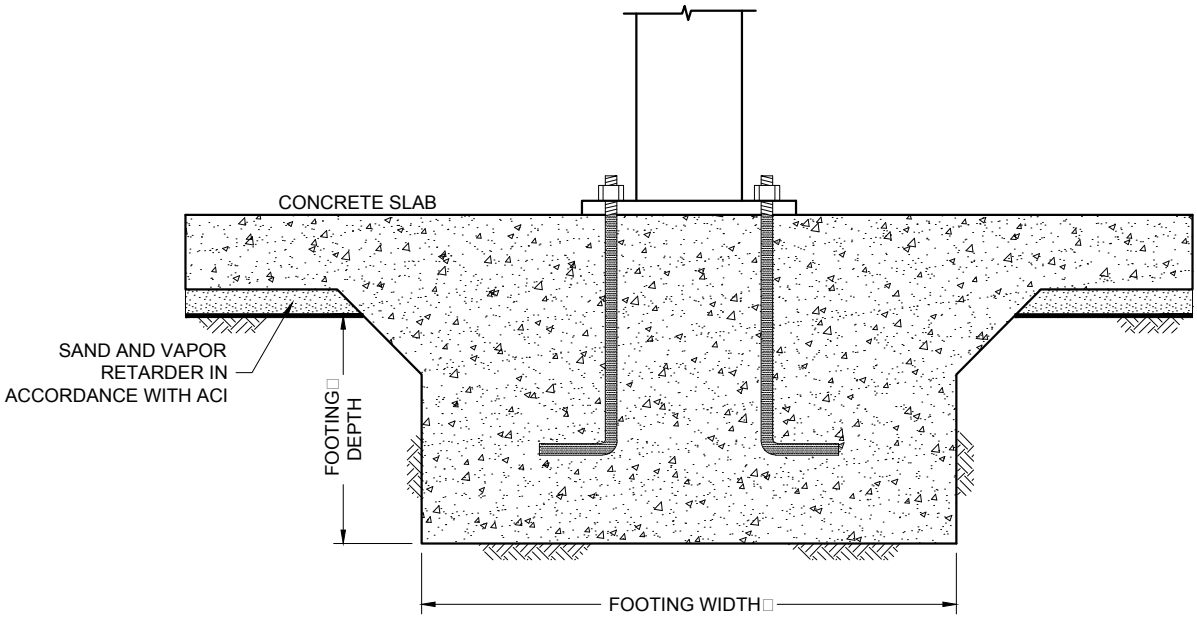

..SEE REPORT FOR FOUNDATION WIDTH AND DEPTH RECOMMENDATION

NO SCALE

WALL / COLUMN FOOTING DIMENSION DETAIL

GEOCON
INCORPORATED
GEOTECHNICAL ■ ENVIRONMENTAL ■ MATERIALS
6960 FLANDERS DRIVE - SAN DIEGO, CALIFORNIA 92121 - 2974
PHONE 858 558-6900 - FAX 858 558-6159

SOUTHWESTERN PARK
SAN DIEGO, CALIFORNIA

NGB / CW		DSK/GTYPD	DATE 03 - 12 - 2019	PROJECT NO. G2367 - 42 - 01	FIG. 3

Plotted:03/11/2019 4:00PM | By:ALVIN LADRILLONO | File Location:Y:\1_GEOTECH\G2000\G2367-42-01\2019-03-12\DETAILS\Wall-Col n Footing Di en ion Detail (COLFOOT2).dwg

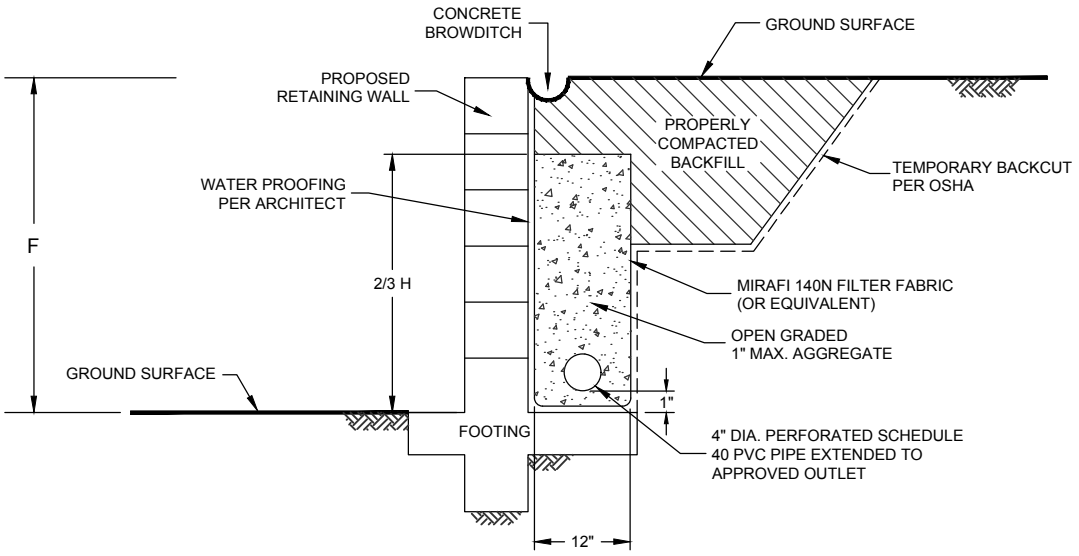

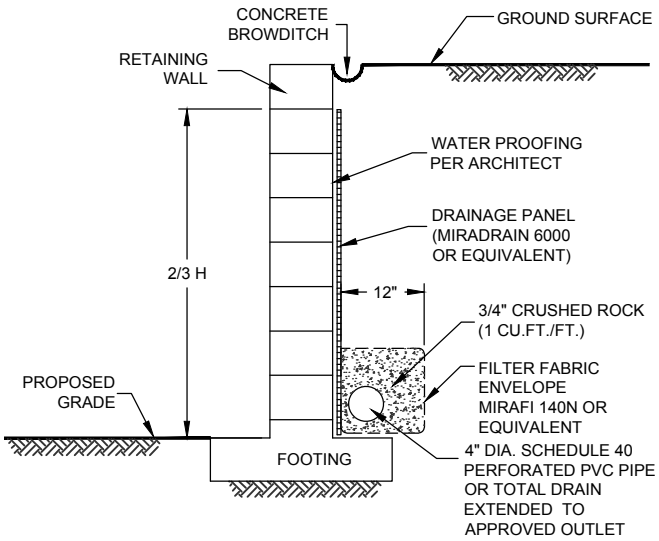

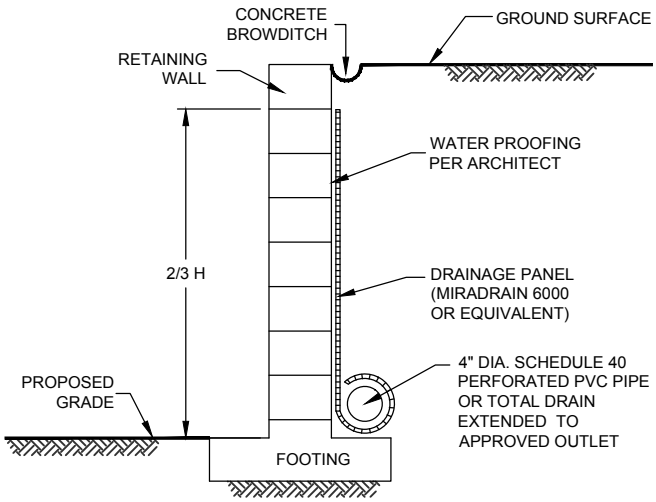

NOTE :

DRAIN SHOULD BE UNIFORMLY SLOPED TO GRAVITY OUTLET OR TO A SUMP WHERE WATER CAN BE REMOVED BY PUMPING

NO SCALE

TYPICAL RETAINING WALL DRAIN DETAIL

GEOCON INCORPORATED
GEOTECHNICAL ■ ENVIRONMENTAL ■ MATERIALS
6960 FLANDERS DRIVE - SAN DIEGO, CALIFORNIA 92121 - 2974
PHONE 858 558-6900 - FAX 858 558-6159

SOUTHWESTERN PARK
SAN DIEGO, CALIFORNIA

NGB / CW		DSK/GTYPD	DATE 03 - 12 - 2019	PROJECT NO. G2367 - 42 - 01	FIG. 4

Plotted:03/11/2019 3:59PM | By:ALVIN LADRILLONO | File Location:Y:\1_GEOTECH\G2000\G2367-42-01\2019-03-12\DETAILS\Typical Retaining Wall Drainage Detail (RWDD7A).dwg

APPENDIX A

APPENDIX A

FIELD INVESTIGATION

The field investigation consisted of excavating 17 backhoe trenches and two infiltration tests. The approximate locations of the trenches and infiltration tests are shown on the Geologic Map, Figure 2. The soil conditions encountered in the excavations were visually classified and logged in general accordance with American Society for Testing and Materials (ASTM) practice for Description and Identification of Soils (Visual Manual Procedure D 2488).

The exploratory trenches, performed on January 28, 2019, were excavated to depths of 5 to 14 feet using a John Deere 410 backhoe equipped with a 24-inch-wide bucket. Bulk samples were obtained for laboratory testing. The logs of the trenches depicting the soil and geologic conditions encountered and the depth at which samples were obtained are presented on Figures A-1 through A-17.

We performed the infiltration testing on January 28, 2019. The infiltration test holes were excavated using a shovel and hand auger.

PROJECT NO. G2367-42-01

TRENCH T 1

ELEV. (MSL.)_____ DATE COMPLETED **01-28-2019**

EQUIPMENT **JD 410 BACKHOE** BY: **N. BORJA**

DEPTH IN FEET	SAMPLE NO.	LITHOLOGY	GROUNDWATER	SOIL CLASS (USCS)	MATERIAL DESCRIPTION	PENETRATION RESISTANCE (BLOWS/FT.)	DRY DENSITY (P.C.F.)	MOISTURE CONTENT (%)
0	T1-1			SM	**UNDOCUMENTED FILL** Loose, damp, dark brown, Silty, fine to medium SAND; trace cobble			
				SM	**OLD PARALIC DEPOSITS** Medium dense, damp, reddish brown, Silty, fine to medium SAND			
2	T1-2							
4	T1-3				-Becomes dense, tan brown			
6					-Becomes light brown			
8				SM/SP-SM	Medium dense, damp, light brown to brown, fine to coarse SAND; some silt			
	T1-4							
10					-Excavates with little grave and cobble			
					TRENCH TERMINATED AT 11 FEET			

Figure A-1,
Log of Trench T 1, Page 1 of 1

G2367-42-01.GPJ

SAMPLE SYMBOLS

... SAMPLING UNSUCCESSFUL
... STANDARD PENETRATION TEST
... DRIVE SAMPLE (UNDISTURBED)
... DISTURBED OR BAG SAMPLE
... CHUNK SAMPLE
... WATER TABLE OR SEEPAGE

NOTE: THE LOG OF SUBSURFACE CONDITIONS SHOWN HEREON APPLIES ONLY AT THE SPECIFIC BORING OR TRENCH LOCATION AND AT THE DATE INDICATED. IT IS NOT WARRANTED TO BE REPRESENTATIVE OF SUBSURFACE CONDITIONS AT OTHER LOCATIONS AND TIMES.

GEOCON

PROJECT NO. G2367-42-01

TRENCH T 2

ELEV. (MSL.)_____ DATE COMPLETED **01-28-2019**

EQUIPMENT **JD 410 BACKHOE** BY: **N. BORJA**

DEPTH IN FEET	SAMPLE NO.	LITHOLOGY	GROUNDWATER	SOIL CLASS (USCS)	MATERIAL DESCRIPTION	PENETRATION RESISTANCE (BLOWS/FT.)	DRY DENSITY (P.C.F.)	MOISTURE CONTENT (%)
0				SM	**UNDOCUMENTED FILL** Loose, moist, dark brown, Silty, fine to medium SAND; few rootlets; excavates with 4-inch diameter metal pipe and 4-foot wide concrete slab			
2				SM	**OLD PARALIC DEPOSITS** Medium dense to dense, damp, brown to reddish brown, Silty fine to medium SAND			
4					-Becomes tan brown			
6				SM/SP-SM	Medium dense, damp, light brown to yellowish brown, fine to coarse SAND; little silt; little gravel and cobble			
8				SM	Dense, damp, brown, Silty, fine to coarse SAND; trace gravel			
10					TRENCH TERMINATED AT 10 FEET			

Figure A-2,
Log of Trench T 2, Page 1 of 1

G2367-42-01.GPJ

SAMPLE SYMBOLS

... SAMPLING UNSUCCESSFUL
... STANDARD PENETRATION TEST
... DRIVE SAMPLE (UNDISTURBED)
... DISTURBED OR BAG SAMPLE
... CHUNK SAMPLE
... WATER TABLE OR SEEPAGE

NOTE: THE LOG OF SUBSURFACE CONDITIONS SHOWN HEREON APPLIES ONLY AT THE SPECIFIC BORING OR TRENCH LOCATION AND AT THE DATE INDICATED. IT IS NOT WARRANTED TO BE REPRESENTATIVE OF SUBSURFACE CONDITIONS AT OTHER LOCATIONS AND TIMES.

GEOCON

PROJECT NO. G2367-42-01

TRENCH T 3

ELEV. (MSL.)_____ DATE COMPLETED **01-28-2019**

EQUIPMENT **JD 410 BACKHOE** BY: **N. BORJA**

DEPTH IN FEET	SAMPLE NO.	LITHOLOGY	GROUNDWATER	SOIL CLASS (USCS)	MATERIAL DESCRIPTION	PENETRATION RESISTANCE (BLOWS/FT.)	DRY DENSITY (P.C.F.)	MOISTURE CONTENT (%)
0				SM	**UNDOCUMENTED FILL** Loose, moist, dark brown, Silty, fine to medium SAND; trace gravel; little trash debris at surface (wood, plastic, metals)			
2								
	T3-1			CL/CH	**ALLUVIUM** Firm, damp, mottled gray, olive, brown and white, Silty to Sandy CLAY			
4								
6								
8				ML	Stiff, moist, olive brown to grayish brown, Sandy SILT			
	T3-2							
10				CL/CH	Stiff, moist, olive brown and white, Silty to Sandy CLAY			
				ML	**OLD PARALIC DEPOSITS** Stiff, moist, light grayish brown, Sandy SILT			
12	T3-3							
14					TRENCH TERMINATED AT 14 FEET			

Figure A-3,
Log of Trench T 3, Page 1 of 1

G2367-42-01.GPJ

SAMPLE SYMBOLS

... SAMPLING UNSUCCESSFUL
... STANDARD PENETRATION TEST
... DRIVE SAMPLE (UNDISTURBED)
... DISTURBED OR BAG SAMPLE
... CHUNK SAMPLE
... WATER TABLE OR SEEPAGE

NOTE: THE LOG OF SUBSURFACE CONDITIONS SHOWN HEREON APPLIES ONLY AT THE SPECIFIC BORING OR TRENCH LOCATION AND AT THE DATE INDICATED. IT IS NOT WARRANTED TO BE REPRESENTATIVE OF SUBSURFACE CONDITIONS AT OTHER LOCATIONS AND TIMES.

GEOCON

PROJECT NO. G2367-42-01

DEPTH IN FEET	SAMPLE NO.	LITHOLOGY	GROUNDWATER	SOIL CLASS (USCS)	**TRENCH T 4** ELEV. (MSL.)_____ DATE COMPLETED **01-28-2019** EQUIPMENT **JD 410 BACKHOE** BY: **N. BORJA**	PENETRATION RESISTANCE (BLOWS/FT.)	DRY DENSITY (P.C.F.)	MOISTURE CONTENT (%)
					MATERIAL DESCRIPTION			
0				SM	**UNDOCUMENTED FILL** Loose, moist, brown, Silty, fine to medium SAND; trace concrete debris			
2				SM	**OLD PARALIC DEPOSITS** Dense to very dense, damp, brown to reddish brown, Silty, fine to coarse SAND			
4					-Cemented between 4-5 feet; hard digging			
6					TRENCH TERMINATED AT 6 FEET			

Figure A-4,
Log of Trench T 4, Page 1 of 1

G2367-42-01.GPJ

SAMPLE SYMBOLS

... SAMPLING UNSUCCESSFUL
... STANDARD PENETRATION TEST
... DRIVE SAMPLE (UNDISTURBED)
... DISTURBED OR BAG SAMPLE
... CHUNK SAMPLE
... WATER TABLE OR SEEPAGE

NOTE: THE LOG OF SUBSURFACE CONDITIONS SHOWN HEREON APPLIES ONLY AT THE SPECIFIC BORING OR TRENCH LOCATION AND AT THE DATE INDICATED. IT IS NOT WARRANTED TO BE REPRESENTATIVE OF SUBSURFACE CONDITIONS AT OTHER LOCATIONS AND TIMES.

GEOCON

PROJECT NO. G2367-42-01

DEPTH IN FEET	SAMPLE NO.	LITHOLOGY	GROUNDWATER	SOIL CLASS (USCS)	**TRENCH T 5** ELEV. (MSL.)_____ DATE COMPLETED **01-28-2019** EQUIPMENT **JD 410 BACKHOE** BY: **N. BORJA**	PENETRATION RESISTANCE (BLOWS/FT.)	DRY DENSITY (P.C.F.)	MOISTURE CONTENT (%)
					MATERIAL DESCRIPTION			
0				SM	**UNDOCUMENTED FILL** Loose, moist, dark brown, Silty, fine to medium SAND			
2				SM	**OLD PARALIC DEPOSITS** Medium dense to dense, damp, reddish brown, Silty, fine to medium SAND			
4					-Becomes tan brown to reddish brown			
6				SM/SP-SM	Dense, damp, little brown to yellowish brown, fine to coarse SAND; few gravel and cobble			
					TRENCH TERMINATED AT 7 FEET			

Figure A-5,
Log of Trench T 5, Page 1 of 1

G2367-42-01.GPJ

SAMPLE SYMBOLS

... SAMPLING UNSUCCESSFUL
... STANDARD PENETRATION TEST
... DRIVE SAMPLE (UNDISTURBED)
... DISTURBED OR BAG SAMPLE
... CHUNK SAMPLE
... WATER TABLE OR SEEPAGE

NOTE: THE LOG OF SUBSURFACE CONDITIONS SHOWN HEREON APPLIES ONLY AT THE SPECIFIC BORING OR TRENCH LOCATION AND AT THE DATE INDICATED. IT IS NOT WARRANTED TO BE REPRESENTATIVE OF SUBSURFACE CONDITIONS AT OTHER LOCATIONS AND TIMES.

GEOCON

PROJECT NO. G2367-42-01

TRENCH T 6

ELEV. (MSL.)_____ DATE COMPLETED **01-28-2019**

EQUIPMENT **JD 410 BACKHOE** BY: **N. BORJA**

DEPTH IN FEET	SAMPLE NO.	LITHOLOGY	GROUNDWATER	SOIL CLASS (USCS)	MATERIAL DESCRIPTION	PENETRATION RESISTANCE (BLOWS/FT.)	DRY DENSITY (P.C.F.)	MOISTURE CONTENT (%)
0	T6-1			SC	**UNDOCUMENTED FILL** Loose, moist, brown to reddish brown, Clayey, fine to medium SAND; trace concrete debris			
2				SM	**OLD PARALIC DEPOSITS** Very dense, damp, light grayish brown, Silty, fine to medium SAND; little gravel and cobble; cemented layer between 2 to 4 feet			
4								
6								
					TRENCH TERMINATED AT 6.5 FEET			

Figure A-6,
Log of Trench T 6, Page 1 of 1

G2367-42-01.GPJ

SAMPLE SYMBOLS

... SAMPLING UNSUCCESSFUL
... STANDARD PENETRATION TEST
... DRIVE SAMPLE (UNDISTURBED)
... DISTURBED OR BAG SAMPLE
... CHUNK SAMPLE
... WATER TABLE OR SEEPAGE

NOTE: THE LOG OF SUBSURFACE CONDITIONS SHOWN HEREON APPLIES ONLY AT THE SPECIFIC BORING OR TRENCH LOCATION AND AT THE DATE INDICATED. IT IS NOT WARRANTED TO BE REPRESENTATIVE OF SUBSURFACE CONDITIONS AT OTHER LOCATIONS AND TIMES.

GEOCON

PROJECT NO. G2367-42-01

TRENCH T 7

ELEV. (MSL.)_____ DATE COMPLETED **01-28-2019**

EQUIPMENT **JD 410 BACKHOE** BY: **N. BORJA**

DEPTH IN FEET	SAMPLE NO.	LITHOLOGY	GROUNDWATER	SOIL CLASS (USCS)	MATERIAL DESCRIPTION	PENETRATION RESISTANCE (BLOWS/FT.)	DRY DENSITY (P.C.F.)	MOISTURE CONTENT (%)
0				SM/SC	**UNDOCUMENTED FILL** Loose, moist, dark brown, Silty to Clayey, fine to medium SAND			
2				CL/CH	Firm, moist, dark brown, Sandy to Silty CLAY			
4				CL/CH	**ALLUVIUM** Firm, moist, mottled gray, olive brown and white, Silty to Sandy CLAY			
6								
8								
	T7-1							
10				SM/ML	**OLD PARALIC DEPOSITS** Medium dense to dense, moist, grayish brown, Silty, fine SAND to Sandy SILT			
	T7-2							
12								
					TRENCH TERMINATED AT 12.5 FEET			

Figure A-7,
Log of Trench T 7, Page 1 of 1

G2367-42-01.GPJ

SAMPLE SYMBOLS

... SAMPLING UNSUCCESSFUL
... STANDARD PENETRATION TEST
... DRIVE SAMPLE (UNDISTURBED)
... DISTURBED OR BAG SAMPLE
... CHUNK SAMPLE
... WATER TABLE OR SEEPAGE

NOTE: THE LOG OF SUBSURFACE CONDITIONS SHOWN HEREON APPLIES ONLY AT THE SPECIFIC BORING OR TRENCH LOCATION AND AT THE DATE INDICATED. IT IS NOT WARRANTED TO BE REPRESENTATIVE OF SUBSURFACE CONDITIONS AT OTHER LOCATIONS AND TIMES.

GEOCON

PROJECT NO. G2367-42-01

DEPTH IN FEET	SAMPLE NO.	LITHOLOGY	GROUNDWATER	SOIL CLASS (USCS)	**TRENCH T 8** ELEV. (MSL.)_____ DATE COMPLETED **01-28-2019** EQUIPMENT **JD 410 BACKHOE** BY: **N. BORJA**	PENETRATION RESISTANCE (BLOWS/FT.)	DRY DENSITY (P.C.F.)	MOISTURE CONTENT (%)
					MATERIAL DESCRIPTION			
0				SM	**TOPSOIL** Loose, moist, dark brown, Silty, fine to medium SAND			
2				CL	**ALLUVIUM** Firm, moist, dark brown, Sandy CLAY			
4								
6				SC	**OLD PARALIC DEPOSITS** Medium dense to dense, damp, olive brown, Clayey, fine to medium SAND			
8								

Figure A-8,
Log of Trench T 8, Page 1 of 1

G2367-42-01.GPJ

SAMPLE SYMBOLS

... SAMPLING UNSUCCESSFUL
... STANDARD PENETRATION TEST
... DRIVE SAMPLE (UNDISTURBED)
... DISTURBED OR BAG SAMPLE
... CHUNK SAMPLE
... WATER TABLE OR SEEPAGE

NOTE: THE LOG OF SUBSURFACE CONDITIONS SHOWN HEREON APPLIES ONLY AT THE SPECIFIC BORING OR TRENCH LOCATION AND AT THE DATE INDICATED. IT IS NOT WARRANTED TO BE REPRESENTATIVE OF SUBSURFACE CONDITIONS AT OTHER LOCATIONS AND TIMES.

GEOCON

PROJECT NO. G2367-42-01

DEPTH IN FEET	SAMPLE NO.	LITHOLOGY	GROUNDWATER	SOIL CLASS (USCS)	**TRENCH T 9** ELEV. (MSL.)_____ DATE COMPLETED **01-28-2019** EQUIPMENT **JD 410 BACKHOE** BY: **N. BORJA**	PENETRATION RESISTANCE (BLOWS/FT.)	DRY DENSITY (P.C.F.)	MOISTURE CONTENT (%)
					MATERIAL DESCRIPTION			
0				SM	**TOPSOIL** Loose, moist, dark brown, Silty, fine to medium SAND; few clay			
2				CL/CH	**ALLUVIUM** Firm, moist, dark brown, Silty to Sandy CLAY			
4				CL	Firm, moist, mottled olive gray and white, Sandy CLAY			
6								
				SM	**OLD PARALIC DEPOSITS** Medium dense, damp, light brown, Silty, fine SAND			
8				SC	Medium dense, damp, little brown to grayish brown, Clayey, fine to medium SAND			
10					TRENCH TERMINATED AT 10 FEET			

Figure A-9,
Log of Trench T 9, Page 1 of 1

G2367-42-01.GPJ

SAMPLE SYMBOLS

... SAMPLING UNSUCCESSFUL
... STANDARD PENETRATION TEST
... DRIVE SAMPLE (UNDISTURBED)
... DISTURBED OR BAG SAMPLE
... CHUNK SAMPLE
... WATER TABLE OR SEEPAGE

NOTE: THE LOG OF SUBSURFACE CONDITIONS SHOWN HEREON APPLIES ONLY AT THE SPECIFIC BORING OR TRENCH LOCATION AND AT THE DATE INDICATED. IT IS NOT WARRANTED TO BE REPRESENTATIVE OF SUBSURFACE CONDITIONS AT OTHER LOCATIONS AND TIMES.

GEOCON

PROJECT NO. G2367-42-01

DEPTH IN FEET	SAMPLE NO.	LITHOLOGY	GROUNDWATER	SOIL CLASS (USCS)	**TRENCH T 10** ELEV. (MSL.)_____ DATE COMPLETED **01-28-2019** EQUIPMENT **JD 410 BACKHOE** BY: **N. BORJA**	PENETRATION RESISTANCE (BLOWS/FT.)	DRY DENSITY (P.C.F.)	MOISTURE CONTENT (%)
					MATERIAL DESCRIPTION			
0				SM	**TOPSOIL** Loose, moist, dark brown, Silty, fine to medium SAND			
2				SM	**OLD PARALIC DEPOSITS** Dense to very dense, damp, tan brown, Silty, fine to coarse SAND; cemented layer between 3 to 4 feet			
4					-Becomes yellowish brown to brown; excavates with little gravel and cobble			
					TRENCH TERMINATED AT 5 FEET			

Figure A-10,
Log of Trench T 10, Page 1 of 1

G2367-42-01.GPJ

SAMPLE SYMBOLS	... SAMPLING UNSUCCESSFUL	... STANDARD PENETRATION TEST	... DRIVE SAMPLE (UNDISTURBED)
	... DISTURBED OR BAG SAMPLE	... CHUNK SAMPLE	... WATER TABLE OR SEEPAGE

NOTE: THE LOG OF SUBSURFACE CONDITIONS SHOWN HEREON APPLIES ONLY AT THE SPECIFIC BORING OR TRENCH LOCATION AND AT THE DATE INDICATED. IT IS NOT WARRANTED TO BE REPRESENTATIVE OF SUBSURFACE CONDITIONS AT OTHER LOCATIONS AND TIMES.

GEOCON

PROJECT NO. G2367-42-01

TRENCH T 11

ELEV. (MSL.)_____ DATE COMPLETED **01-28-2019**

EQUIPMENT **JD 410 BACKHOE** BY: **N. BORJA**

DEPTH IN FEET	SAMPLE NO.	LITHOLOGY	GROUNDWATER	SOIL CLASS (USCS)	MATERIAL DESCRIPTION	PENETRATION RESISTANCE (BLOWS/FT.)	DRY DENSITY (P.C.F.)	MOISTURE CONTENT (%)
0				SM	**TOPSOIL** Loose, moist, dark brown, Silty, fine to coarse SAND			
2				SM	**OLD PARALIC DEPOSITS** Dense, dry to damp, tan brown to reddish brown, Silty, fine to coarse SAND; trace gravel			
4								
6				SM/SP-SM	Medium dense to dense, damp, tan brown, fine to coarse SAND; little silt, trace gravel			
8					-Becomes brown to dark brown; increase in fines content			
					TRENCH TERMINATED AT 8.5 FEET			

Figure A-11,
Log of Trench T 11, Page 1 of 1

G2367-42-01.GPJ

SAMPLE SYMBOLS

... SAMPLING UNSUCCESSFUL
... STANDARD PENETRATION TEST
... DRIVE SAMPLE (UNDISTURBED)
... DISTURBED OR BAG SAMPLE
... CHUNK SAMPLE
... WATER TABLE OR SEEPAGE

NOTE: THE LOG OF SUBSURFACE CONDITIONS SHOWN HEREON APPLIES ONLY AT THE SPECIFIC BORING OR TRENCH LOCATION AND AT THE DATE INDICATED. IT IS NOT WARRANTED TO BE REPRESENTATIVE OF SUBSURFACE CONDITIONS AT OTHER LOCATIONS AND TIMES.

GEOCON

PROJECT NO. G2367-42-01

TRENCH T 12

ELEV. (MSL.)_____ DATE COMPLETED **01-28-2019**

EQUIPMENT **JD 410 BACKHOE** BY: **N. BORJA**

DEPTH IN FEET	SAMPLE NO.	LITHOLOGY	GROUNDWATER	SOIL CLASS (USCS)	MATERIAL DESCRIPTION	PENETRATION RESISTANCE (BLOWS/FT.)	DRY DENSITY (P.C.F.)	MOISTURE CONTENT (%)
0	T12-1			SC/CL	**TOPSOIL** Loose, moist, dark brown, Clayey, fine to medium SAND to Sandy CLAY; little rootlet			
2				SM	**OLD PARALIC DEPOSITS** Dense, damp, tan brown, Silty, fine to medium SAND			
4					-Becomes yellowish brown -Becomes cemented			
					TRENCH TERMINATED AT 5.5 FEET			

Figure A-12,
Log of Trench T 12, Page 1 of 1

G2367-42-01.GPJ

SAMPLE SYMBOLS

... SAMPLING UNSUCCESSFUL
... STANDARD PENETRATION TEST
... DRIVE SAMPLE (UNDISTURBED)
... DISTURBED OR BAG SAMPLE
... CHUNK SAMPLE
... WATER TABLE OR SEEPAGE

NOTE: THE LOG OF SUBSURFACE CONDITIONS SHOWN HEREON APPLIES ONLY AT THE SPECIFIC BORING OR TRENCH LOCATION AND AT THE DATE INDICATED. IT IS NOT WARRANTED TO BE REPRESENTATIVE OF SUBSURFACE CONDITIONS AT OTHER LOCATIONS AND TIMES.

GEOCON

PROJECT NO. G2367-42-01

TRENCH T 13

ELEV. (MSL.)_____ DATE COMPLETED **01-28-2019**

EQUIPMENT **JD 410 BACKHOE** BY: **N. BORJA**

DEPTH IN FEET	SAMPLE NO.	LITHOLOGY	GROUNDWATER	SOIL CLASS (USCS)	MATERIAL DESCRIPTION	PENETRATION RESISTANCE (BLOWS/FT.)	DRY DENSITY (P.C.F.)	MOISTURE CONTENT (%)
0				CL	**TOPSOIL** Loose, moist, dark brown, Sandy CLAY			
2								
				CL	**ALLUVIUM** Firm, damp, olive brown and white, Sandy CLAY			
4				ML	Firm damp, light brown and white, Sandy SILT; few clay			
6				CL	Firm to stiff, damp, grayish brown and white, Sandy CLAY			
8				SM	**OLD PARALIC DEPOSITS** Medium dense, damp, light brown and light gray, Silty, fine SAND			
10					TRENCH TERMINATED AT 10 FEET			

Figure A-13,
Log of Trench T 13, Page 1 of 1

G2367-42-01.GPJ

SAMPLE SYMBOLS

... SAMPLING UNSUCCESSFUL
... STANDARD PENETRATION TEST
... DRIVE SAMPLE (UNDISTURBED)
... DISTURBED OR BAG SAMPLE
... CHUNK SAMPLE
... WATER TABLE OR SEEPAGE

NOTE: THE LOG OF SUBSURFACE CONDITIONS SHOWN HEREON APPLIES ONLY AT THE SPECIFIC BORING OR TRENCH LOCATION AND AT THE DATE INDICATED. IT IS NOT WARRANTED TO BE REPRESENTATIVE OF SUBSURFACE CONDITIONS AT OTHER LOCATIONS AND TIMES.

GEOCON

PROJECT NO. G2367-42-01

TRENCH T 14

ELEV. (MSL.)_____ DATE COMPLETED **01-28-2019**

EQUIPMENT **JD 410 BACKHOE** BY: **N. BORJA**

DEPTH IN FEET	SAMPLE NO.	LITHOLOGY	GROUNDWATER	SOIL CLASS (USCS)	MATERIAL DESCRIPTION	PENETRATION RESISTANCE (BLOWS/FT.)	DRY DENSITY (P.C.F.)	MOISTURE CONTENT (%)
0				CL/SC	**TOPSOIL** Soft to firm, moist, dark brown, Sandy CLAY to Clayey, fine to medium SAND			
2								
4				CL	**ALLUVIUM** Firm to stiff, moist, mottled gray and olive brown with black specs, Sandy CLAY			
				SM	Medium dense, moist, little brown and light reddish brown, Silty, fine to medium SAND			
6	T14-1			SM/SC	Medium dense, moist, dark brown, Silty to Clayey, fine to medium SAND			
8								
10								
12	T14-2			SM	**OLD PARALIC DEPOSITS** Medium dense to dense, moist, brown to dark brown and grayish brown, Silty, fine to coarse SAND			
14					TRENCH TERMINATED AT 14 FEET			

Figure A-14,
Log of Trench T 14, Page 1 of 1

G2367-42-01.GPJ

SAMPLE SYMBOLS

... SAMPLING UNSUCCESSFUL
... STANDARD PENETRATION TEST
... DRIVE SAMPLE (UNDISTURBED)
... DISTURBED OR BAG SAMPLE
... CHUNK SAMPLE
... WATER TABLE OR SEEPAGE

NOTE: THE LOG OF SUBSURFACE CONDITIONS SHOWN HEREON APPLIES ONLY AT THE SPECIFIC BORING OR TRENCH LOCATION AND AT THE DATE INDICATED. IT IS NOT WARRANTED TO BE REPRESENTATIVE OF SUBSURFACE CONDITIONS AT OTHER LOCATIONS AND TIMES.

GEOCON

PROJECT NO. G2367-42-01

DEPTH IN FEET	SAMPLE NO.	LITHOLOGY	GROUNDWATER	SOIL CLASS (USCS)	**TRENCH T 15** ELEV. (MSL.)_____ DATE COMPLETED **01-28-2019** EQUIPMENT **JD 410 BACKHOE** BY: **N. BORJA**	PENETRATION RESISTANCE (BLOWS/FT.)	DRY DENSITY (P.C.F.)	MOISTURE CONTENT (%)
					MATERIAL DESCRIPTION			
0				SM	**TOPSOIL** Loose, moist, dark brown, Silty, fine to medium SAND; porous			
2				SM	**ALLUVIUM** Loose, moist, grayish brown, Silty to Clayey, fine to medium SAND			
4								
6				SM	**OLD PARALIC DEPOSITS** Medium dense to dense, tan brown, Silty, fine to coarse SAND			
8					-Becomes mottled tan brown and olive brown, excavates with few gravel and cobble			
					TRENCH TERMINATED AT 9.5 FEET			

Figure A-15,
Log of Trench T 15, Page 1 of 1

G2367-42-01.GPJ

SAMPLE SYMBOLS

... SAMPLING UNSUCCESSFUL
... STANDARD PENETRATION TEST
... DRIVE SAMPLE (UNDISTURBED)
... DISTURBED OR BAG SAMPLE
... CHUNK SAMPLE
... WATER TABLE OR SEEPAGE

NOTE: THE LOG OF SUBSURFACE CONDITIONS SHOWN HEREON APPLIES ONLY AT THE SPECIFIC BORING OR TRENCH LOCATION AND AT THE DATE INDICATED. IT IS NOT WARRANTED TO BE REPRESENTATIVE OF SUBSURFACE CONDITIONS AT OTHER LOCATIONS AND TIMES.

GEOCON

PROJECT NO. G2367-42-01

TRENCH T 16

ELEV. (MSL.)_____ DATE COMPLETED **01-28-2019**

EQUIPMENT **JD 410 BACKHOE** BY: **N. BORJA**

DEPTH IN FEET	SAMPLE NO.	LITHOLOGY	GROUNDWATER	SOIL CLASS (USCS)	MATERIAL DESCRIPTION	PENETRATION RESISTANCE (BLOWS/FT.)	DRY DENSITY (P.C.F.)	MOISTURE CONTENT (%)
0				CL	**TOPSOIL** Soft to firm, moist, dark brown, Sandy CLAY			
2								
				CL/CH	**ALLUVIUM** Firm, dry to damp, olive brown, Silty to Sandy CLAY; friable			
4								
					-Becomes mottled olive brown and white			
6								
					-Becomes mottled white and dark gray			
8				CL/SC	Firm to stiff, damp to moist, olive brown, Sandy CLAY to Clayey, fine to medium SAND; porous			
				SM	**OLD PARALIC DEPOSITS** Medium dense, moist, light brown, Silty, fine to medium SAND			
10					TRENCH TERMINATED AT 10 FEET			

Figure A-16,
Log of Trench T 16, Page 1 of 1

G2367-42-01.GPJ

SAMPLE SYMBOLS

... SAMPLING UNSUCCESSFUL
... STANDARD PENETRATION TEST
... DRIVE SAMPLE (UNDISTURBED)
... DISTURBED OR BAG SAMPLE
... CHUNK SAMPLE
... WATER TABLE OR SEEPAGE

NOTE: THE LOG OF SUBSURFACE CONDITIONS SHOWN HEREON APPLIES ONLY AT THE SPECIFIC BORING OR TRENCH LOCATION AND AT THE DATE INDICATED. IT IS NOT WARRANTED TO BE REPRESENTATIVE OF SUBSURFACE CONDITIONS AT OTHER LOCATIONS AND TIMES.

GEOCON

PROJECT NO. G2367-42-01

TRENCH T 17

ELEV. (MSL.)_____ DATE COMPLETED **01-28-2019**

EQUIPMENT **JD 410 BACKHOE** BY: **N. BORJA**

DEPTH IN FEET	SAMPLE NO.	LITHOLOGY	GROUNDWATER	SOIL CLASS (USCS)	MATERIAL DESCRIPTION	PENETRATION RESISTANCE (BLOWS/FT.)	DRY DENSITY (P.C.F.)	MOISTURE CONTENT (%)
0	T17-1			SC	**TOPSOIL** Loose, moist, dark brown, Clayey, fine to medium SAND; few rootlet			
2				CL/CH	**ALLUVIUM** Firm to stiff, moist, olive brown, Silty to Sandy CLAY			
4				SM	Loose to medium dense, moist, olive brown with white stringers, Silty, fine to medium SAND			
6	T17-2			SM	**OLD PARALIC DEPOSITS** Dense, moist, yellowish brown to reddish brown, Silty, fine to coarse SAND			
8					TRENCH TERMINATED AT 8 FEET			

Figure A-17,
Log of Trench T 17, Page 1 of 1

G2367-42-01.GPJ

SAMPLE SYMBOLS

... SAMPLING UNSUCCESSFUL
... STANDARD PENETRATION TEST
... DRIVE SAMPLE (UNDISTURBED)
... DISTURBED OR BAG SAMPLE
... CHUNK SAMPLE
... WATER TABLE OR SEEPAGE

NOTE: THE LOG OF SUBSURFACE CONDITIONS SHOWN HEREON APPLIES ONLY AT THE SPECIFIC BORING OR TRENCH LOCATION AND AT THE DATE INDICATED. IT IS NOT WARRANTED TO BE REPRESENTATIVE OF SUBSURFACE CONDITIONS AT OTHER LOCATIONS AND TIMES.

GEOCON

APPENDIX B

APPENDIX B

LABORATORY TESTING

We performed laboratory tests in accordance with generally accepted test methods of the American Society for Testing and Materials (ASTM) or other suggested procedures. We tested selected samples for their maximum dry density and optimum moisture content, direct shear, expansion, water-soluble and sulfate characteristics, chloride content, pH and resistivity, and resistance value (R-value) tests. The results of our laboratory tests are presented on the following tables and graphs.

TABLE B-I
SUMMARY OF LABORATORY MAXIMUM DRY DENSITY AND OPTIMUM MOISTURE CONTENT TEST RESULTS
ASTM D 1557

Proctor Curve No.	Source and Description	Maximum Dry Density (pcf)	Optimum Moisture Content (%)
T1-2	Dark reddish brown, Silty fine to medium SAND	133.6	7.8
T17-1	Dark brown, Sandy CLAY; trace gravel	120.0	12.8

TABLE B-II
SUMMARY OF LABORATORY DIRECT SHEAR TEST RESULTS
ASTM D 3080

Sample No.	Dry Density (pcf)	Moisture Content (%)		Angle of Shear Resistance (degrees)	Unit Cohesion (psf)
		Initial	Final		
*T1-2	120.5	8.0	13.6	35	230
*T17.1	107.5	13.6	21.9	26	400

*Samples remolded to approximately 90 percent relative compaction near optimum moisture content.

TABLE B-III
SUMMARY OF LABORATORY EXPANSION INDEX TEST RESULTS
ASTM D 4829

Sample No.	Moisture Content (%)		Dry Density (pcf)	Expansion Index	Expansion Classification
	Before Test	After Test			
T1-2	7.6	14.7	118.9	3	Very Low
T3-1	10.2	23.7	107.6	61	Medium

TABLE B-IV
SUMMARY OF LABORATORY POTENTIAL OF HYDROGEN (PH) AND RESISTIVITY TEST RESULTS
CALIFORNIA TEST NO. 643

Sample No.	pH	Minimum Resistivity (ohm-centimeters)
T3-1	8.24	250
T17-1	8.47	670

TABLE B-V
SUMMARY OF LABORATORY WATER-SOLUBLE SULFATE TEST RESULTS
CALIFORNIA TEST NO. 417

Sample No.	Water-Soluble Sulfate (%)	Sulfate Class
T1-2	0.014	S0
T3-1	0.162	S1

TABLE B-VI
SUMMARY OF LABORATORY CHLORIDE ION TEST RESULTS
AASHTO T 291

Sample No.	Chloride Ion Content (ppm)	Chloride Ion Content (%)
T3-1	188	0.019
T17-1	2,152	0.252

TABLE B-VII
SUMMARY OF LABORATORY RESISTANCE VALUE (R-VALUE) TEST RESULTS
ASTM D 2844

Sample No.	R-Value
T17-1	3

PROJECT NO. G2367-42-01

GRAVEL		SAND			SILT OR CLAY
COARSE	FINE	COARSE	MEDIUM	FINE	

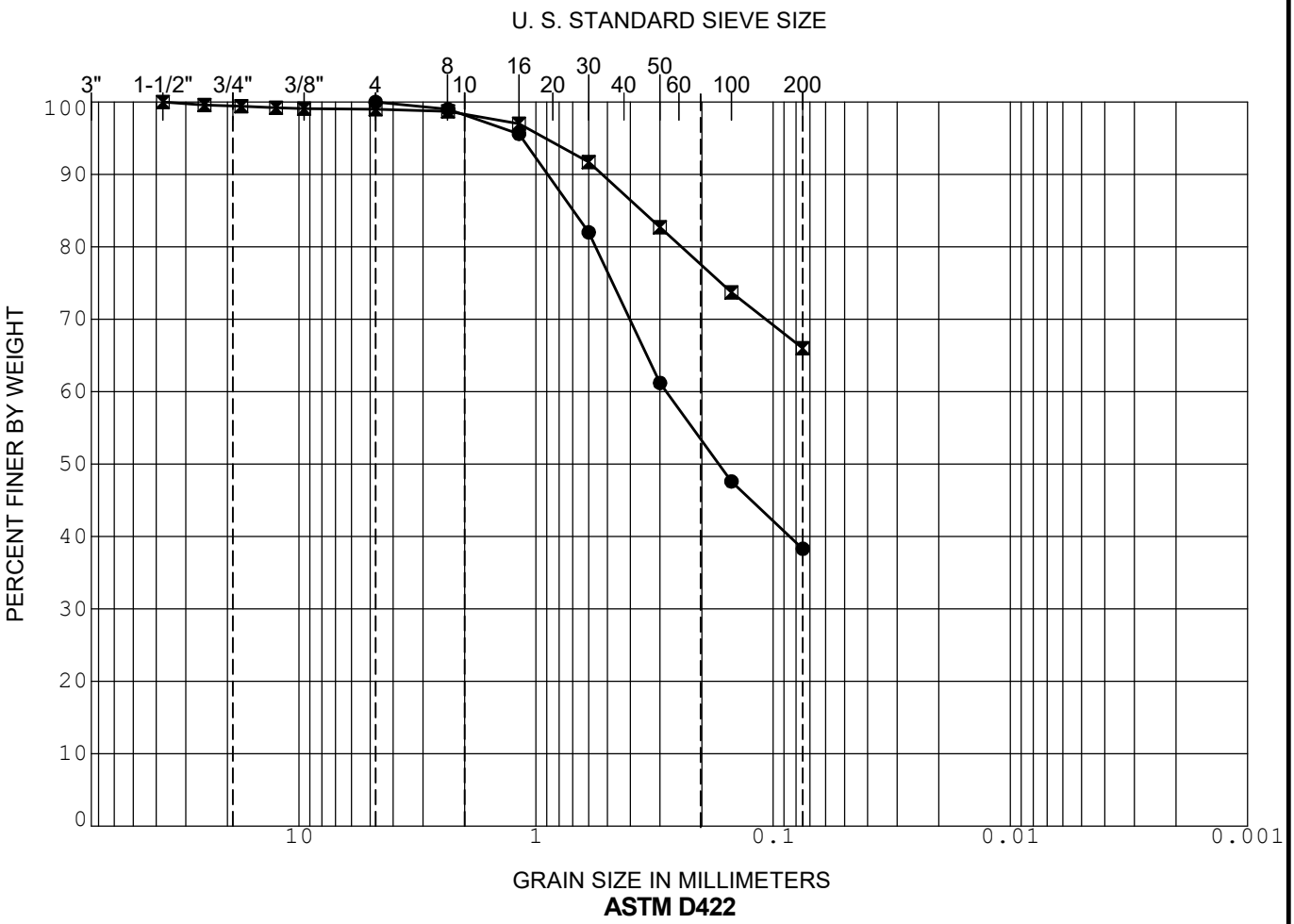

	SAMPLE	DEPTH (ft)	CLASSIFICATION	NAT WC	LL	PL	PI
●	T1-2	2.0	SM - Silty SAND				
⊠	T17-1	1.0	CL - Sandy, lean CLAY				
▲							

GRADATION CURVE

SOUTHWESTERN PARK

SAN DIEGO, CALIFORNIA

G2367-42-01.GPJ

Figure B-1

GEOCON

APPENDIX C

APPENDIX C

STORM WATER MANAGEMENT

We understand storm water management devices are being proposed in accordance with the current Storm Water Standards (SWS). If not properly constructed, there is a potential for distress to improvements and properties located hydrologically down gradient or adjacent to these devices. Factors such as the amount of water to be detained, its residence time, and soil permeability have an important effect on seepage transmission and the potential adverse impacts that may occur if the storm water management features are not properly designed and constructed. We have not performed a hydrogeological study at the site. If infiltration of storm water runoff occurs, downstream properties and improvements may be subjected to seeps, springs, slope instability, raised groundwater, movement of foundations and slabs, or other undesirable impacts as a result of water infiltration.

Hydrologic Soil Group

The United States Department of Agriculture (USDA), Natural Resources Conservation Services, possesses general information regarding the existing soil conditions for areas within the United States. The USDA website also provides the Hydrologic Soil Group. Table C-1 presents the descriptions of the hydrologic soil groups. In addition, the USDA website also provides an estimated saturated hydraulic conductivity for the existing soil.

TABLE C-1
HYDROLOGIC SOIL GROUP DEFINITIONS

Soil Group	Soil Group Definition
A	Soils having a high infiltration rate (low runoff potential) when thoroughly wet. These consist mainly of deep, well drained to excessively drained sands or gravelly sands. These soils have a high rate of water transmission.
B	Soils having a moderate infiltration rate when thoroughly wet. These consist chiefly of moderately deep or deep, moderately well drained or well drained soils that have moderately fine texture to moderately coarse texture. These soils have a moderate rate of water transmission.
C	Soils having a slow infiltration rate when thoroughly wet. These consist chiefly of soils having a layer that impedes the downward movement of water or soils of moderately fine texture or fine texture. These soils have a slow rate of water transmission.
D	Soils having a very slow infiltration rate (high runoff potential) when thoroughly wet. These consist chiefly of clays that have a high shrink-swell potential, soils that have a high water table, soils that have a claypan or clay layer at or near the surface, and soils that are shallow over nearly impervious material. These soils have a very slow rate of water transmission.

The property is underlain by undocumented fill, alluvium, and very old paralic deposits. Table C-2 presents the information from the USDA website for the subject property.

TABLE C-2
USDA WEB SOIL SURVEY – HYDROLOGIC SOIL GROUP

Map Unit Name	Map Unit Symbol	Approximate Percentage of Property	Hydrologic Soil Group
Huerhuero loam, 2 to 9 percent slopes	HrC	59.5	D
Huerhuero loam, 5 to 9 percent slopes	HrC	40.5	D

Infiltration Testing

We performed two borehole infiltration tests at the locations shown on Figure 2. The test holes were excavated using a 4-inch hand-auger. Table C-3 presents the results of the testing. The calculation sheets are also provided herein.

We used the guidelines presented in the Riverside County Low Impact Development BMP Design Handbook. Based on this widely accepted guideline, the saturated hydraulic conductivity (Ksat) is equivalent to the infiltration rate. Therefore, the Ksat value determined from our testing is assumed to be the unfactored infiltration rate.

TABLE C-3
UNFACTORED, FIELD-SATURATED, INFILTRATION TEST RESULTS

Test No.	Depth (inches)	Geologic Unit	Field Infiltration Rate, I (in/hr)	Factored* Field Infiltration Rate, I (in/hr)
A-1	31	Qop	0.007	0.0035
A-2	20	Qal	0.014	0.007

* Factor of Safety of 2.0 for feasibility determination.

STORM WATER MANAGEMENT CONCLUSIONS

Soil Types

Undocumented Fill (Qudf) – We encountered undocumented fill varying between about 1 to 4.5 feet thick at the south end of the site. The undocumented fill within structural improvement areas will be removed and replaced as compacted fill. Water that is allowed to migrate into the undocumented fill or future compacted fill will cause settlement. Therefore, full and partial infiltration should be considered infeasible within fill.

Topsoil (Unmapped) – We encountered topsoil varying between about 1.5 to 3 feet thick. The topsoil within structural improvement areas will be removed and replaced with compacted fill. Water that is

allowed to migrate into the topsoil or future compacted fill will cause soil movement. Therefore, full and partial infiltration should be considered infeasible within topsoil.

Alluvium (Qal) – We encountered alluvium varying between about 2.5 to 9 feet thick in the north and west portions of the site. The alluvium within structural improvement areas will be removed and replaced as compacted fill. Due to the clayey nature of the alluvium and its low infiltration characteristics, full and partial infiltration should be considered infeasible within the alluvium.

Old Paralic Deposits (Qop) – We encountered old paralic deposits at the base of the surficial soils. Infiltration in the old paralic deposits is not feasible due to very low infiltration characteristics.

Groundwater Elevation

Groundwater was not encountered in our trenches to the maximum depths explored. Infiltration should not impact groundwater.

Existing Utilities

Existing utilities are located at the central portion of the site and along the western edge of the property. Infiltration near these utilities is considered infeasible. Otherwise, infiltration due to utility concerns would be feasible.

Soil or Groundwater Contamination

We are unaware of contaminated soil or groundwater on the property. Therefore, full and partial infiltration associated with this risk is considered feasible.

Infiltration Rates

Our test results indicated unfactored infiltration rates were 0.007 and 0.014 inches per hour for tests A-1 and A-2, respectively. The infiltration rates are not high enough to support full or partial infiltration.

Storm Water Management Devices

Liners should be incorporated in BMP basins. The liner should be impermeable (e.g. High-density polyethylene, HDPE, with a thickness of about 30 mil or equivalent Polyvinyl Chloride, PVC). Penetration of the liners should be properly sealed. The devices should also be installed in accordance with the manufacturer's recommendations. Overflow protection devices should also be incorporated into the design and construction of the storm water management device.

Storm Water Standard Worksheets

The SWS requests the geotechnical engineer complete the *Categorization of Infiltration Feasibility Condition* (Worksheet C.4-1) worksheet information to help evaluate the potential for infiltration on the property. The attached Worksheet C.4-1 presents the completed information for the submittal process.

The regional storm water standards also have a worksheet (Worksheet Form D.5-1) that helps the project civil engineer estimate the factor of safety based on several factors. Table C-4 describes the suitability assessment input parameters related to the geotechnical engineering aspects for the factor of safety determination.

TABLE C-4
SUITABILITY ASSESSMENT RELATED CONSIDERATIONS FOR INFILTRATION FACILITY SAFETY FACTORS

Consideration	High Concern – 3 Points	Medium Concern – 2 Points	Low Concern – 1 Point
Assessment Methods	Use of soil survey maps or simple texture analysis to estimate short-term infiltration rates. Use of well permeameter or borehole methods without accompanying continuous boring log. Relatively sparse testing with direct infiltration methods	Use of well permeameter or borehole methods with accompanying continuous boring log. Direct measurement of infiltration area with localized infiltration measurement methods (e.g., Infiltrometer). Moderate spatial resolution	Direct measurement with localized (i.e. small-scale) infiltration testing methods at relatively high resolution or use of extensive test pit infiltration measurement methods.
Predominant Soil Texture	Silty and clayey soils with significant fines	Loamy soils	Granular to slightly loamy soils
Site Soil Variability	Highly variable soils indicated from site assessment or unknown variability	Soil boring/test pits indicate moderately homogenous soils	Soil boring/test pits indicate relatively homogenous soils
Depth to Groundwater/ Impervious Layer	<5 feet below facility bottom	5-15 feet below facility bottom	>15 feet below facility bottom

Table C-5 presents the estimated factor values for the evaluation of the factor of safety. This table only presents the suitability assessment safety factor (Part A) of the worksheet. The project civil engineer should evaluate the safety factor for design (Part B) and use the combined safety factor for the design infiltration rate.

TABLE C-5
FACTOR OF SAFETY WORKSHEET D.5-1 DESIGN VALUES[1]

Suitability Assessment Factor Category	Assigned Weight (w)	Factor Value (v)	Product (p = w x v)
Assessment Methods	0.25	2	0.50
Predominant Soil Texture	0.25	2	0.50
Site Soil Variability	0.25	3	0.75
Depth to Groundwater/Impervious Layer	0.25	1	0.25
Suitability Assessment Safety Factor, $S_A = \Sigma p$			2.0

[1] The project civil engineer should complete Worksheet D.5-1 using the data on this table. Additional information is required to evaluate the design factor of safety.

CONCLUSIONS

Our results indicate the site has relatively slow infiltration characteristics. Because of the site conditions, it is our opinion that there is a potential for lateral water migration. Undocumented fill, topsoil, and alluvium exists on the property that will ultimately be removed and recompacted in the area of the planned improvements. It is our opinion that full or partial infiltration is infeasible on this site. Our evaluation included the soil and geologic conditions, estimated settlement and volume change of the underlying soil, slope stability, utility considerations, groundwater mounding, retaining walls, foundations and existing groundwater elevations.

Categorization of Infiltration Feasibility Condition based on Geotechnical Conditions	Worksheet C.4-1: Form I-8A[10]
Part 1 - Full Infiltration Feasibility Screening Criteria	
DMA(s) Being Analyzed:	Project Phase:
Site	Preliminary
Criteria 1: Infiltration Rate Screening	

1A	Is the mapped hydrologic soil group according to the NRCS Web Soil Survey or UC Davis Soil Web Mapper Type A or B and corroborated by available site soil data[11]? ☐Yes; the DMA may feasibly support full infiltration. Answer "Yes" to Criteria 1 Result or continue to Step 1B if the applicant elects to perform infiltration testing. ☐No; the mapped soil types are A or B but is not corroborated by available site soil data (continue to Step 1B). ☑No; the mapped soil types are C, D, or "urban/unclassified" and is corroborated by available site soil data. Answer "No" to Criteria 1 Result. ☐No; the mapped soil types are C, D, or "urban/unclassified" but is not corroborated by available site soil data (continue to Step 1B).
1B	Is the reliable infiltration rate calculated using planning phase methods from Table D.3-1? ☐Yes; Continue to Step 1C. ☐No; Skip to Step 1D.
1C	Is the reliable infiltration rate calculated using planning phase methods from Table D.3-1 greater than 0.5 inches per hour? ☐Yes; the DMA may feasibly support full infiltration. Answer "Yes" to Criteria 1 Result. ☐No; full infiltration is not required. Answer "No" to Criteria 1 Result.
1D	**Infiltration Testing Method.** Is the selected infiltration testing method suitable during the design phase (see Appendix D.3)? Note: Alternative testing standards may be allowed with appropriate rationales and documentation. ☐Yes; continue to Step 1E. ☐No; select an appropriate infiltration testing method.

Note that it is not required to investigate each and every criterion in the worksheet, a single "no" answer in Part 1, Part 2, Part 3, or Part 4 determines a full, partial, or no infiltration condition.

[10] This form must be completed each time there is a change to the site layout that would affect the infiltration feasibility condition. Previously completed forms shall be retained to document the evolution of the site storm water design.

[11] Available data includes site-specific sampling or observation of soil types or texture classes, such as obtained from borings or test pits necessary to support other design elements.

Categorization of Infiltration Feasibility Condition based on Geotechnical Conditions	Worksheet C.4-1: Form I-8A[10]
1E	**Number of Percolation/Infiltration Tests.** Does the infiltration testing method performed satisfy the minimum number of tests specified in Table D.3-2? ☐Yes; continue to Step 1F. ☐No; conduct appropriate number of tests.
IF	**Factor of Safety.** Is the suitable Factor of Safety selected for full infiltration design? See guidance in D.5; Tables D.5-1 and D.5-2; and Worksheet D.5-1 (Form I-9). ☐Yes; continue to Step 1G. ☐No; select appropriate factor of safety.
1G	**Full Infiltration Feasibility.** Is the average measured infiltration rate divided by the Factor of Safety greater than 0.5 inches per hour? ☐Yes; answer "Yes" to Criteria 1 Result. ☐No; answer "No" to Criteria 1 Result.
Criteria 1 Result	Is the estimated reliable infiltration rate greater than 0.5 inches per hour within the DMA where runoff can reasonably be routed to a BMP? ☐Yes; the DMA may feasibly support full infiltration. Continue to Criteria 2. ☑No; full infiltration is not required. Skip to Part 1 Result.

Summarize infiltration testing methods, testing locations, replicates, and results and summarize estimates of reliable infiltration rates according to procedures outlined in D.5. Documentation should be included in project geotechnical report.

We performed field-saturated, hydraulic conductivity tests, A-1 and A-2, using a Soil Moisture Corp Aardvark Permeameter. The location of the infiltration tests are shown on the Geologic Map, Figure 2. The test holes were excavated using conventional hand tools and a 4-inch diameter hand auger. The unfactored test results of the saturated hydraulic conductivity tests for A-1 and A-2 is 0.007 and 0.014 in/hr, respectively.

Categorization of Infiltration Feasibility Condition based on Geotechnical Conditions		Worksheet C.4-1: Form I-8A[10]	
Criteria 2: Geologic/Geotechnical Screening			
2A	If all questions in Step 2A are answered "Yes," continue to Step 2B. For any "No" answer in Step 2A answer "No" to Criteria 2, and submit an "Infiltration Feasibility Condition Letter" that meets the requirements in Appendix C.1.1. The geologic/geotechnical analyses listed in Appendix C.2.1 do not apply to the DMA because one of the following setbacks cannot be avoided and therefore result in the DMA being in a no infiltration condition. The setbacks must be the closest horizontal radial distance from the surface edge (at the overflow elevation) of the BMP.		
2A-1	Can the proposed full infiltration BMP(s) avoid areas with existing fill materials greater than 5 feet thick below the infiltrating surface?	☐Yes	☐No
2A-2	Can the proposed full infiltration BMP(s) avoid placement within 10 feet of existing underground utilities, structures, or retaining walls?	☐Yes	☐No
2A-3	Can the proposed full infiltration BMP(s) avoid placement within 50 feet of a natural slope (>25%) or within a distance of 1.5H from fill slopes where H is the height of the fill slope?	☐Yes	☐No
2B	When full infiltration is determined to be feasible, a geotechnical investigation report must be prepared that considers the relevant factors identified in Appendix C.2.1. If all questions in Step 2B are answered "Yes," then answer "Yes" to Criteria 2 Result. If there are "No" answers continue to Step 2C.		
2B-1	**Hydroconsolidation.** Analyze hydroconsolidation potential per approved ASTM standard due to a proposed full infiltration BMP. Can full infiltration BMPs be proposed within the DMA without increasing hydroconsolidation risks?	☐Yes	☐No
2B-2	**Expansive Soils.** Identify expansive soils (soils with an expansion index greater than 20) and the extent of such soils due to proposed full infiltration BMPs. Can full infiltration BMPs be proposed within the DMA without increasing expansive soil risks?	☐Yes	☐No

Categorization of Infiltration Feasibility Condition based on Geotechnical Conditions		Worksheet C.4-1: Form I-8A[10]	
2B-3	**Liquefaction**. If applicable, identify mapped liquefaction areas. Evaluate liquefaction hazards in accordance with Section 6.4.2 of the City of San Diego's Guidelines for Geotechnical Reports (2011 or most recent edition). Liquefaction hazard assessment shall take into account any increase in groundwater elevation or groundwater mounding that could occur as a result of proposed infiltration or percolation facilities. Can full infiltration BMPs be proposed within the DMA without increasing liquefaction risks?	☐Yes	☐No
2B-4	**Slope Stability**. If applicable, perform a slope stability analysis in accordance with the ASCE and Southern California Earthquake Center (2002) Recommended Procedures for Implementation of DMG Special Publication 117, Guidelines for Analyzing and Mitigating Landslide Hazards in California to determine minimum slope setbacks for full infiltration BMPs. See the City of San Diego's Guidelines for Geotechnical Reports (2011) to determine which type of slope stability analysis is required. Can full infiltration BMPs be proposed within the DMA without increasing slope stability risks?	☐Yes	☐No
2B-5	**Other Geotechnical Hazards.** Identify site-specific geotechnical hazards not already mentioned (refer to Appendix C.2.1). Can full infiltration BMPs be proposed within the DMA without increasing risk of geologic or geotechnical hazards not already mentioned?	☐Yes	☐No
2B-6	**Setbacks.** Establish setbacks from underground utilities, structures, and/or retaining walls. Reference applicable ASTM or other recognized standard in the geotechnical report. Can full infiltration BMPs be proposed within the DMA using established setbacks from underground utilities, structures, and/or retaining walls?	☐ Yes	☐ No

Categorization of Infiltration Feasibility Condition based on Geotechnical Conditions		Worksheet C.4-1: Form I-8A[10]	
2C	**Mitigation Measures.** Propose mitigation measures for each geologic/geotechnical hazard identified in Step 2B. Provide a discussion of geologic/geotechnical hazards that would prevent full infiltration BMPs that cannot be reasonably mitigated in the geotechnical report. See Appendix C.2.1.8 for a list of typically reasonable and typically unreasonable mitigation measures. Can mitigation measures be proposed to allow for full infiltration BMPs? If the question in Step 2 is answered "Yes," then answer "Yes" to Criteria 2 Result. If the question in Step 2C is answered "No," then answer "No" to Criteria 2 Result.	☐Yes	☐No
Criteria 2 Result	Can infiltration greater than 0.5 inches per hour be allowed without increasing risk of geologic or geotechnical hazards that cannot be reasonably mitigated to an acceptable level?	☐Yes	☐No
Summarize findings and basis; provide references to related reports or exhibits.			

Part 1 Result – Full Infiltration Geotechnical Screening [12]	Result
If answers to both Criteria 1 and Criteria 2 are "Yes", a full infiltration design is potentially feasible based on Geotechnical conditions only. If either answer to Criteria 1 or Criteria 2 is "No", a full infiltration design is not required.	☐Full infiltration Condition ☑Complete Part 2

[12] To be completed using gathered site information and best professional judgement considering the definition of MEP in the MS4 Permit. Additional testing and/or studies may be required by City Engineer to substantiate findings.

Categorization of Infiltration Feasibility Condition based on Geotechnical Conditions	Worksheet C.4-1: Form I-8A[10]
Part 2 – Partial vs. No Infiltration Feasibility Screening Criteria	
DMA(s) Being Analyzed:	Project Phase:
	Preliminary

Criteria 3 : Infiltration Rate Screening	
3A	**NRCS Type C, D, or "urban/unclassified":** Is the mapped hydrologic soil group according to the NRCS Web Soil Survey or UC Davis Soil Web Mapper is Type C, D, or "urban/unclassified" and corroborated by available site soil data? ☐ Yes; the site is mapped as C soils and a reliable infiltration rate of 0.15 in/hr. is used to size partial infiltration BMPS. Answer "Yes" to Criteria 3 Result. ☐ Yes; the site is mapped as D soils or "urban/unclassified" and a reliable infiltration rate of 0.05 in/hr. is used to size partial infiltration BMPS. Answer "Yes" to Criteria 3 Result. ☑ No; infiltration testing is conducted (refer to Table D.3-1), continue to Step 3B.
3B	**Infiltration Testing Result:** Is the reliable infiltration rate (i.e. average measured infiltration rate/2) greater than 0.05 in/hr. and less than or equal to 0.5 in/hr? ☐ Yes; the site may support partial infiltration. Answer "Yes" to Criteria 3 Result. ☑ No; the reliable infiltration rate (i.e. average measured rate/2) is less than 0.05 in/hr., partial infiltration is not required. Answer "No" to Criteria 3 Result.
Criteria 3 Result	Is the estimated reliable infiltration rate (i.e., average measured infiltration rate/2) greater than or equal to 0.05 inches/hour and less than or equal to 0.5 inches/hour at any location within each DMA where runoff can reasonably be routed to a BMP? ☐ Yes; Continue to Criteria 4. ☑ No: Skip to Part 2 Result.

Summarize infiltration testing and/or mapping results (i.e. soil maps and series description used for infiltration rate).

We performed field-saturated, hydraulic conductivity tests, A-1 and A-2, using a Soil Moisture Corp Aardvark Permeameter. The location of the infiltration tests are shown on the Geologic Map, Figure 2. The test holes were excavated using conventional hand tools and a 4-inch diameter hand auger. The unfactored test results of the saturated hydraulic conductivity tests for A-1 and A-2 is 0.007 and 0.014 in/hr, respectively.

Categorization of Infiltration Feasibility Condition based on Geotechnical Conditions		Worksheet C.4-1: Form I-8A[10]	
Criteria 4: Geologic/Geotechnical Screening			
4A	If all questions in Step 4A are answered "Yes," continue to Step 2B. For any "No" answer in Step 4A answer "No" to Criteria 4 Result, and submit an "Infiltration Feasibility Condition Letter" that meets the requirements in Appendix C.1.1. The geologic/geotechnical analyses listed in Appendix C.2.1 do not apply to the DMA because one of the following setbacks cannot be avoided and therefore result in the DMA being in a no infiltration condition. The setbacks must be the closest horizontal radial distance from the surface edge (at the overflow elevation) of the BMP.		
4A-1	Can the proposed partial infiltration BMP(s) avoid areas with existing fill materials greater than 5 feet thick?	☐Yes	☐No
4A-2	Can the proposed partial infiltration BMP(s) avoid placement within 10 feet of existing underground utilities, structures, or retaining walls?	☐Yes	☐No
4A-3	Can the proposed partial infiltration BMP(s) avoid placement within 50 feet of a natural slope (>25%) or within a distance of 1.5H from fill slopes where H is the height of the fill slope?	☐Yes	☐No
4B	When full infiltration is determined to be feasible, a geotechnical investigation report must be prepared that considers the relevant factors identified in Appendix C.2.1 If all questions in Step 4B are answered "Yes," then answer "Yes" to Criteria 4 Result. If there are any "No" answers continue to Step 4C.		
4B-1	**Hydroconsolidation.** Analyze hydroconsolidation potential per approved ASTM standard due to a proposed full infiltration BMP. Can partial infiltration BMPs be proposed within the DMA without increasing hydroconsolidation risks?	☐Yes	☐No
4B-2	**Expansive Soils.** Identify expansive soils (soils with an expansion index greater than 20) and the extent of such soils due to proposed full infiltration BMPs. Can partial infiltration BMPs be proposed within the DMA without increasing expansive soil risks?	☐Yes	☐No

Categorization of Infiltration Feasibility Condition based on Geotechnical Conditions		Worksheet C.4-1: Form I-8A[10]	
4B-3	**Liquefaction**. If applicable, identify mapped liquefaction areas. Evaluate liquefaction hazards in accordance with Section 6.4.2 of the City of San Diego's Guidelines for Geotechnical Reports (2011). Liquefaction hazard assessment shall take into account any increase in groundwater elevation or groundwater mounding that could occur as a result of proposed infiltration or percolation facilities. Can partial infiltration BMPs be proposed within the DMA without increasing liquefaction risks?	☐Yes	☐No
4B-4	**Slope Stability**. If applicable, perform a slope stability analysis in accordance with the ASCE and Southern California Earthquake Center (2002) Recommended Procedures for Implementation of DMG Special Publication 117, Guidelines for Analyzing and Mitigating Landslide Hazards in California to determine minimum slope setbacks for full infiltration BMPs. See the City of San Diego's Guidelines for Geotechnical Reports (2011) to determine which type of slope stability analysis is required. Can partial infiltration BMPs be proposed within the DMA without increasing slope stability risks?	☐Yes	☐No
4B-5	**Other Geotechnical Hazards.** Identify site-specific geotechnical hazards not already mentioned (refer to Appendix C.2.1). Can partial infiltration BMPs be proposed within the DMA without increasing risk of geologic or geotechnical hazards not already mentioned?	☐Yes	☐No
4B-6	**Setbacks.** Establish setbacks from underground utilities, structures, and/or retaining walls. Reference applicable ASTM or other recognized standard in the geotechnical report. Can partial infiltration BMPs be proposed within the DMA using recommended setbacks from underground utilities, structures, and/or retaining walls?	☐Yes	☐No
4C	**Mitigation Measures.** Propose mitigation measures for each geologic/geotechnical hazard identified in Step 4B. Provide a discussion on geologic/geotechnical hazards that would prevent partial infiltration BMPs that cannot be reasonably mitigated in the geotechnical report. See Appendix C.2.1.8 for a list of typically reasonable and typically unreasonable mitigation measures. Can mitigation measures be proposed to allow for partial infiltration BMPs? If the question in Step 4C is answered "Yes," then answer "Yes" to Criteria 4 Result. If the question in Step 4C is answered "No," then answer "No" to Criteria 4 Result.	☐Yes	☐No

Categorization of Infiltration Feasibility Condition based on Geotechnical Conditions		Worksheet C.4-1: Form I-8A[10]	
Criteria 4 Result	Can infiltration of greater than or equal to 0.05 inches/hour and less than or equal to 0.5 inches/hour be allowed without increasing the risk of geologic or geotechnical hazards that cannot be reasonably mitigated to an acceptable level?	☐ Yes	☑ No

Summarize findings and basis; provide references to related reports or exhibits.

Test results indicate infiltration rates less than 0.05 in/hr and are not high enough to support infiltration.

Part 2 – Partial Infiltration Geotechnical Screening Result[13]	Result
If answers to both Criteria 3 and Criteria 4 are "Yes", a partial infiltration design is potentially feasible based on geotechnical conditions only. If answers to either Criteria 3 or Criteria 4 is "No", then infiltration of any volume is considered to be infeasible within the site.	☐ Partial Infiltration Condition ☑ No Infiltration Condition

[13] To be completed using gathered site information and best professional judgement considering the definition of MEP in the MS4 Permit. Additional testing and/or studies may be required by City Engineer to substantiate findings.

GEOCON

Aardvark Permeameter Data Analysis

Project Name:	Southwestern Park	Date:	1/28/2019
Project Number:	G2367-42-01	By:	JML
Test Number:	A-1		

Borehole Diameter, d (in.):	4.00
Borehole Depth, **H** (in):	34.00
Distance Between Reservoir & Top of Borehole (in.):	30.00
Estimated Depth to Water Table, **S** (feet):	50.00
Height APM Raised from Bottom (in.):	0.00
Pressure Reducer Used:	No

Ref. EL (feet, MSL):	0.0
Bottom EL (feet, MSL):	-2.8

Distance Between Resevoir and APM Float, **D** (in.):	56.75
Head Height Calculated, **h** (in.):	3.69
Head Height Measured, **h** (in.):	3.50
Distance Between Constant Head and Water Table, **L** (in.):	569.50

Reading	Time Elapsed (min)	Water Weight Consummed (lbs)	Water Volume Consummed (in^3)	Q (in^3/min)
1	0.00	0.000	0.00	0.00
2	5.00	0.030	0.83	0.166
3	5.00	0.035	0.97	0.194
4	5.00	0.035	0.97	0.194
5	5.00	0.025	0.69	0.138
6	5.00	0.035	0.97	0.194
7	5.00	0.025	0.69	0.138
8	5.00	0.020	0.55	0.111
9	5.00	0.025	0.69	0.138
10	5.00	0.025	0.69	0.138
			Steady Flow Rate, Q (in^3/min):	0.129

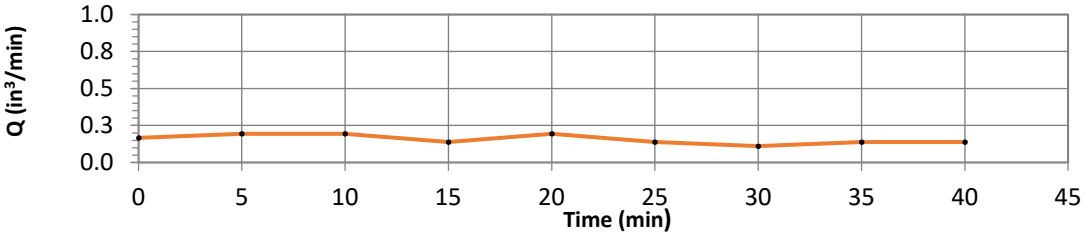

Soil Matric Flux Potential, Φ_m

Φ_m= 0.00445 in^2/min

Field-Saturated Hydraulic Conductivity (Infiltration Rate)

K_{sat} = 1.13E-04 in/min 0.007 in/hr

GEOCON

Aardvark Permeameter Data Analysis

Project Name:	Southwestern Park	Date:	1/28/2019
Project Number:	G2367-42-01	By:	JML
Test Number:	A-2	Ref. EL (feet, MSL):	0.0
		Bottom EL (feet, MSL):	-1.7

Borehole Diameter, d (in.):	4.00
Borehole Depth, **H** (in):	20.00
Distance Between Reservoir & Top of Borehole (in.):	30.50
Estimated Depth to Water Table, **S** (feet):	50.00
Height APM Raised from Bottom (in.):	0.00
Pressure Reducer Used:	No

Distance Between Resevoir and APM Float, **D** (in.):	43.25
Head Height Calculated, **h** (in.):	3.64
Head Height Measured, **h** (in.):	3.75
Distance Between Constant Head and Water Table, **L** (in.):	583.75

Reading	Time Elapsed (min)	Water Weight Consummed (lbs)	Water Volume Consummed (in^3)	Q (in^3/min)
1	0.00	0.000	0.00	0.00
2	5.00	0.460	12.74	2.548
3	5.00	0.450	12.46	2.492
4	5.00	0.400	11.08	2.215
5	5.00	0.210	5.82	1.163
6	5.00	0.050	1.38	0.277
7	5.00	0.070	1.94	0.388
8	5.00	0.120	3.32	0.665
9	5.00	0.015	0.42	0.083
10	5.00	0.035	0.97	0.194
11	5.00	0.035	0.97	0.194
12	5.00	0.015	0.42	0.083
13	5.00	0.015	0.42	0.083
			Steady Flow Rate, Q (in^3/min):	0.083

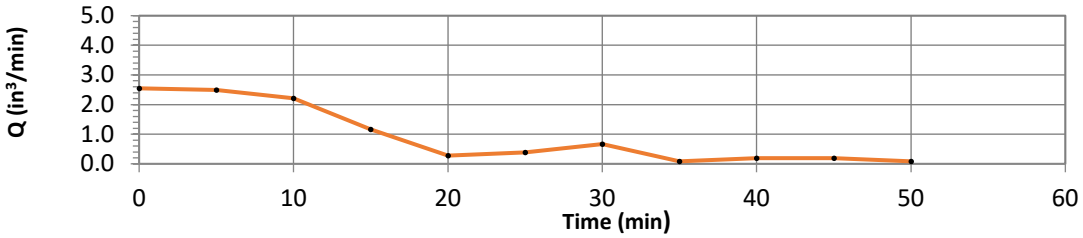

Soil Matric Flux Potential, Φ_m

Φ_m= 0.0022 in^2/min

Field-Saturated Hydraulic Conductivity (Infiltration Rate)

K_{sat} = 2.28E-04 in/min 0.014 in/hr

APPENDIX D

APPENDIX D

RECOMMENDED GRADING SPECIFICATIONS

FOR

SOUTHWESTERN PARK
SAN DIEGO, CALIFORNIA

PROJECT NO. G2367-42-01

RECOMMENDED GRADING SPECIFICATIONS

1. GENERAL

1.1 These Recommended Grading Specifications shall be used in conjunction with the Geotechnical Report for the project prepared by Geocon. The recommendations contained in the text of the Geotechnical Report are a part of the earthwork and grading specifications and shall supersede the provisions contained hereinafter in the case of conflict.

1.2 Prior to the commencement of grading, a geotechnical consultant (Consultant) shall be employed for the purpose of observing earthwork procedures and testing the fills for substantial conformance with the recommendations of the Geotechnical Report and these specifications. The Consultant should provide adequate testing and observation services so that they may assess whether, in their opinion, the work was performed in substantial conformance with these specifications. It shall be the responsibility of the Contractor to assist the Consultant and keep them apprised of work schedules and changes so that personnel may be scheduled accordingly.

1.3 It shall be the sole responsibility of the Contractor to provide adequate equipment and methods to accomplish the work in accordance with applicable grading codes or agency ordinances, these specifications and the approved grading plans. If, in the opinion of the Consultant, unsatisfactory conditions such as questionable soil materials, poor moisture condition, inadequate compaction, and/or adverse weather result in a quality of work not in conformance with these specifications, the Consultant will be empowered to reject the work and recommend to the Owner that grading be stopped until the unacceptable conditions are corrected.

2. DEFINITIONS

2.1 **Owner** shall refer to the owner of the property or the entity on whose behalf the grading work is being performed and who has contracted with the Contractor to have grading performed.

2.2 **Contractor** shall refer to the Contractor performing the site grading work.

2.3 **Civil Engineer** or **Engineer of Work** shall refer to the California licensed Civil Engineer or consulting firm responsible for preparation of the grading plans, surveying and verifying as-graded topography.

2.4 **Consultant** shall refer to the soil engineering and engineering geology consulting firm retained to provide geotechnical services for the project.

2.5 **Soil Engineer** shall refer to a California licensed Civil Engineer retained by the Owner, who is experienced in the practice of geotechnical engineering. The Soil Engineer shall be responsible for having qualified representatives on-site to observe and test the Contractor's work for conformance with these specifications.

2.6 **Engineering Geologist** shall refer to a California licensed Engineering Geologist retained by the Owner to provide geologic observations and recommendations during the site grading.

2.7 **Geotechnical Report** shall refer to a soil report (including all addenda) which may include a geologic reconnaissance or geologic investigation that was prepared specifically for the development of the project for which these Recommended Grading Specifications are intended to apply.

3. MATERIALS

3.1 Materials for compacted fill shall consist of any soil excavated from the cut areas or imported to the site that, in the opinion of the Consultant, is suitable for use in construction of fills. In general, fill materials can be classified as *soil* fills, *soil-rock* fills or *rock* fills, as defined below.

3.1.1 **Soil fills** are defined as fills containing no rocks or hard lumps greater than 12 inches in maximum dimension and containing at least 40 percent by weight of material smaller than ¾ inch in size.

3.1.2 **Soil-rock fills** are defined as fills containing no rocks or hard lumps larger than 4 feet in maximum dimension and containing a sufficient matrix of soil fill to allow for proper compaction of soil fill around the rock fragments or hard lumps as specified in Paragraph 6.2. **Oversize rock** is defined as material greater than 12 inches.

3.1.3 **Rock fills** are defined as fills containing no rocks or hard lumps larger than 3 feet in maximum dimension and containing little or no fines. Fines are defined as material smaller than ¾ inch in maximum dimension. The quantity of fines shall be less than approximately 20 percent of the rock fill quantity.

3.2 Material of a perishable, spongy, or otherwise unsuitable nature as determined by the Consultant shall not be used in fills.

3.3 Materials used for fill, either imported or on-site, shall not contain hazardous materials as defined by the California Code of Regulations, Title 22, Division 4, Chapter 30, Articles 9

and 10; 40CFR; and any other applicable local, state or federal laws. The Consultant shall not be responsible for the identification or analysis of the potential presence of hazardous materials. However, if observations, odors or soil discoloration cause Consultant to suspect the presence of hazardous materials, the Consultant may request from the Owner the termination of grading operations within the affected area. Prior to resuming grading operations, the Owner shall provide a written report to the Consultant indicating that the suspected materials are not hazardous as defined by applicable laws and regulations.

3.4 The outer 15 feet of *soil-rock* fill slopes, measured horizontally, should be composed of properly compacted *soil* fill materials approved by the Consultant. *Rock* fill may extend to the slope face, provided that the slope is not steeper than 2:1 (horizontal:vertical) and a soil layer no thicker than 12 inches is track-walked onto the face for landscaping purposes. This procedure may be utilized provided it is acceptable to the governing agency, Owner and Consultant.

3.5 Samples of soil materials to be used for fill should be tested in the laboratory by the Consultant to determine the maximum density, optimum moisture content, and, where appropriate, shear strength, expansion, and gradation characteristics of the soil.

3.6 During grading, soil or groundwater conditions other than those identified in the Geotechnical Report may be encountered by the Contractor. The Consultant shall be notified immediately to evaluate the significance of the unanticipated condition

4. CLEARING AND PREPARING AREAS TO BE FILLED

4.1 Areas to be excavated and filled shall be cleared and grubbed. Clearing shall consist of complete removal above the ground surface of trees, stumps, brush, vegetation, man-made structures, and similar debris. Grubbing shall consist of removal of stumps, roots, buried logs and other unsuitable material and shall be performed in areas to be graded. Roots and other projections exceeding 1½ inches in diameter shall be removed to a depth of 3 feet below the surface of the ground. Borrow areas shall be grubbed to the extent necessary to provide suitable fill materials.

4.2 Asphalt pavement material removed during clearing operations should be properly disposed at an approved off-site facility or in an acceptable area of the project evaluated by Geocon and the property owner. Concrete fragments that are free of reinforcing steel may be placed in fills, provided they are placed in accordance with Section 6.2 or 6.3 of this document.

4.3 After clearing and grubbing of organic matter and other unsuitable material, loose or porous soils shall be removed to the depth recommended in the Geotechnical Report. The depth of removal and compaction should be observed and approved by a representative of the Consultant. The exposed surface shall then be plowed or scarified to a minimum depth of 6 inches and until the surface is free from uneven features that would tend to prevent uniform compaction by the equipment to be used.

4.4 Where the slope ratio of the original ground is steeper than 5:1 (horizontal:vertical), or where recommended by the Consultant, the original ground should be benched in accordance with the following illustration.

TYPICAL BENCHING DETAIL

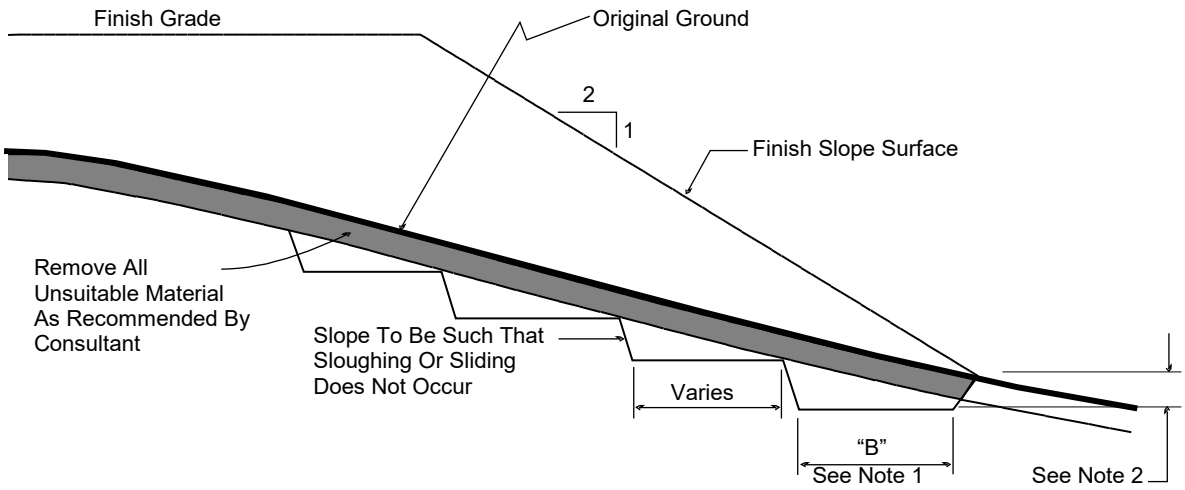

No Scale

DETAIL NOTES:

(1) Key width "B" should be a minimum of 10 feet, or sufficiently wide to permit complete coverage with the compaction equipment used. The base of the key should be graded horizontal, or inclined slightly into the natural slope.

(2) The outside of the key should be below the topsoil or unsuitable surficial material and at least 2 feet into dense formational material. Where hard rock is exposed in the bottom of the key, the depth and configuration of the key may be modified as approved by the Consultant.

4.5 After areas to receive fill have been cleared and scarified, the surface should be moisture conditioned to achieve the proper moisture content, and compacted as recommended in Section 6 of these specifications.

5. COMPACTION EQUIPMENT

5.1 Compaction of *soil* or *soil-rock* fill shall be accomplished by sheepsfoot or segmented-steel wheeled rollers, vibratory rollers, multiple-wheel pneumatic-tired rollers, or other types of acceptable compaction equipment. Equipment shall be of such a design that it will be capable of compacting the *soil* or *soil-rock* fill to the specified relative compaction at the specified moisture content.

5.2 Compaction of *rock* fills shall be performed in accordance with Section 6.3.

6. PLACING, SPREADING AND COMPACTION OF FILL MATERIAL

6.1 *Soil* fill, as defined in Paragraph 3.1.1, shall be placed by the Contractor in accordance with the following recommendations:

6.1.1 *Soil* fill shall be placed by the Contractor in layers that, when compacted, should generally not exceed 8 inches. Each layer shall be spread evenly and shall be thoroughly mixed during spreading to obtain uniformity of material and moisture in each layer. The entire fill shall be constructed as a unit in nearly level lifts. Rock materials greater than 12 inches in maximum dimension shall be placed in accordance with Section 6.2 or 6.3 of these specifications.

6.1.2 In general, the *soil* fill shall be compacted at a moisture content at or above the optimum moisture content as determined by ASTM D 1557.

6.1.3 When the moisture content of *soil* fill is below that specified by the Consultant, water shall be added by the Contractor until the moisture content is in the range specified.

6.1.4 When the moisture content of the *soil* fill is above the range specified by the Consultant or too wet to achieve proper compaction, the *soil* fill shall be aerated by the Contractor by blading/mixing, or other satisfactory methods until the moisture content is within the range specified.

6.1.5 After each layer has been placed, mixed, and spread evenly, it shall be thoroughly compacted by the Contractor to a relative compaction of at least 90 percent. Relative compaction is defined as the ratio (expressed in percent) of the in-place dry density of the compacted fill to the maximum laboratory dry density as determined in accordance with ASTM D 1557. Compaction shall be continuous over the entire area, and compaction equipment shall make sufficient passes so that the specified minimum relative compaction has been achieved throughout the entire fill.

6.1.6 Where practical, soils having an Expansion Index greater than 50 should be placed at least 3 feet below finish pad grade and should be compacted at a moisture content generally 2 to 4 percent greater than the optimum moisture content for the material.

6.1.7 Properly compacted *soil* fill shall extend to the design surface of fill slopes. To achieve proper compaction, it is recommended that fill slopes be over-built by at least 3 feet and then cut to the design grade. This procedure is considered preferable to track-walking of slopes, as described in the following paragraph.

6.1.8 As an alternative to over-building of slopes, slope faces may be back-rolled with a heavy-duty loaded sheepsfoot or vibratory roller at maximum 4-foot fill height intervals. Upon completion, slopes should then be track-walked with a D-8 dozer or similar equipment, such that a dozer track covers all slope surfaces at least twice.

6.2 *Soil-rock* fill, as defined in Paragraph 3.1.2, shall be placed by the Contractor in accordance with the following recommendations:

6.2.1 Rocks larger than 12 inches but less than 4 feet in maximum dimension may be incorporated into the compacted *soil* fill, but shall be limited to the area measured 15 feet minimum horizontally from the slope face and 5 feet below finish grade or 3 feet below the deepest utility, whichever is deeper.

6.2.2 Rocks or rock fragments up to 4 feet in maximum dimension may either be individually placed or placed in windrows. Under certain conditions, rocks or rock fragments up to 10 feet in maximum dimension may be placed using similar methods. The acceptability of placing rock materials greater than 4 feet in maximum dimension shall be evaluated during grading as specific cases arise and shall be approved by the Consultant prior to placement.

6.2.3 For individual placement, sufficient space shall be provided between rocks to allow for passage of compaction equipment.

6.2.4 For windrow placement, the rocks should be placed in trenches excavated in properly compacted *soil* fill. Trenches should be approximately 5 feet wide and 4 feet deep in maximum dimension. The voids around and beneath rocks should be filled with approved granular soil having a Sand Equivalent of 30 or greater and should be compacted by flooding. Windrows may also be placed utilizing an "open-face" method in lieu of the trench procedure, however, this method should first be approved by the Consultant.

6.2.5 Windrows should generally be parallel to each other and may be placed either parallel to or perpendicular to the face of the slope depending on the site geometry. The minimum horizontal spacing for windrows shall be 12 feet center-to-center with a 5-foot stagger or offset from lower courses to next overlying course. The minimum vertical spacing between windrow courses shall be 2 feet from the top of a lower windrow to the bottom of the next higher windrow.

6.2.6 Rock placement, fill placement and flooding of approved granular soil in the windrows should be continuously observed by the Consultant.

6.3 *Rock* fills, as defined in Section 3.1.3, shall be placed by the Contractor in accordance with the following recommendations:

6.3.1 The base of the *rock* fill shall be placed on a sloping surface (minimum slope of 2 percent). The surface shall slope toward suitable subdrainage outlet facilities. The *rock* fills shall be provided with subdrains during construction so that a hydrostatic pressure buildup does not develop. The subdrains shall be permanently connected to controlled drainage facilities to control post-construction infiltration of water.

6.3.2 *Rock* fills shall be placed in lifts not exceeding 3 feet. Placement shall be by rock trucks traversing previously placed lifts and dumping at the edge of the currently placed lift. Spreading of the *rock* fill shall be by dozer to facilitate *seating* of the rock. The *rock* fill shall be watered heavily during placement. Watering shall consist of water trucks traversing in front of the current rock lift face and spraying water continuously during rock placement. Compaction equipment with compactive energy comparable to or greater than that of a 20-ton steel vibratory roller or other compaction equipment providing suitable energy to achieve the required compaction or deflection as recommended in Paragraph 6.3.3 shall be utilized. The number of passes to be made should be determined as described in Paragraph 6.3.3. Once a *rock* fill lift has been covered with *soil* fill, no additional *rock* fill lifts will be permitted over the *soil* fill.

6.3.3 Plate bearing tests, in accordance with ASTM D 1196, may be performed in both the compacted *soil* fill and in the *rock* fill to aid in determining the required minimum number of passes of the compaction equipment. If performed, a minimum of three plate bearing tests should be performed in the properly compacted *soil* fill (minimum relative compaction of 90 percent). Plate bearing tests shall then be performed on areas of *rock* fill having two passes, four passes and six passes of the compaction equipment, respectively. The number of passes required for the *rock* fill shall be determined by comparing the results of the plate bearing tests for the *soil* fill and the *rock* fill and by evaluating the deflection

variation with number of passes. The required number of passes of the compaction equipment will be performed as necessary until the plate bearing deflections are equal to or less than that determined for the properly compacted *soil* fill. In no case will the required number of passes be less than two.

6.3.4 A representative of the Consultant should be present during *rock* fill operations to observe that the minimum number of "passes" have been obtained, that water is being properly applied and that specified procedures are being followed. The actual number of plate bearing tests will be determined by the Consultant during grading.

6.3.5 Test pits shall be excavated by the Contractor so that the Consultant can state that, in their opinion, sufficient water is present and that voids between large rocks are properly filled with smaller rock material. In-place density testing will not be required in the *rock* fills.

6.3.6 To reduce the potential for "piping" of fines into the *rock* fill from overlying *soil* fill material, a 2-foot layer of graded filter material shall be placed above the uppermost lift of *rock* fill. The need to place graded filter material below the *rock* should be determined by the Consultant prior to commencing grading. The gradation of the graded filter material will be determined at the time the *rock* fill is being excavated. Materials typical of the *rock* fill should be submitted to the Consultant in a timely manner, to allow design of the graded filter prior to the commencement of *rock* fill placement.

6.3.7 *Rock* fill placement should be continuously observed during placement by the Consultant.

7. SUBDRAINS

7.1 The geologic units on the site may have permeability characteristics and/or fracture systems that could be susceptible under certain conditions to seepage. The use of canyon subdrains may be necessary to mitigate the potential for adverse impacts associated with seepage conditions. Canyon subdrains with lengths in excess of 500 feet or extensions of existing offsite subdrains should use 8-inch-diameter pipes. Canyon subdrains less than 500 feet in length should use 6-inch-diameter pipes.

TYPICAL CANYON DRAIN DETAIL

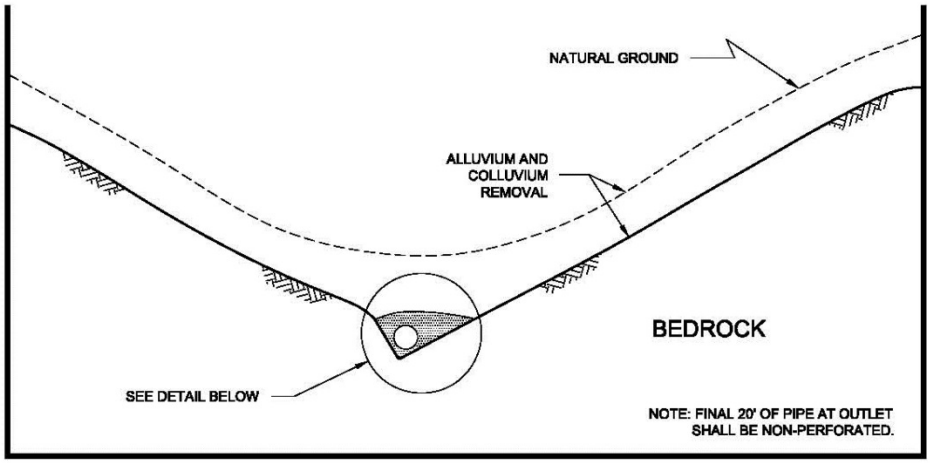

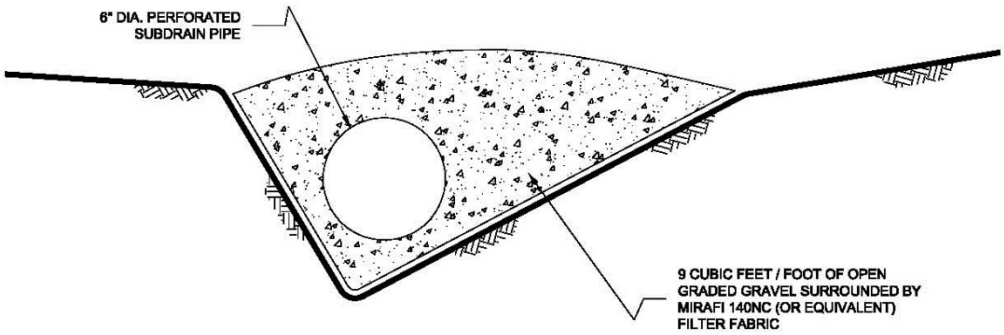

NOTES:

1.....8-INCH DIAMETER, SCHEDULE 80 PVC PERFORATED PIPE FOR FILLS
IN EXCESS OF 100-FEET IN DEPTH OR A PIPE LENGTH OF LONGER THAN 500 FEET.

2.....6-INCH DIAMETER, SCHEDULE 40 PVC PERFORATED PIPE FOR FILLS
LESS THAN 100-FEET IN DEPTH OR A PIPE LENGTH SHORTER THAN 500 FEET.

NO SCALE

7.2 Slope drains within stability fill keyways should use 4-inch-diameter (or lager) pipes.

TYPICAL STABILITY FILL DETAIL

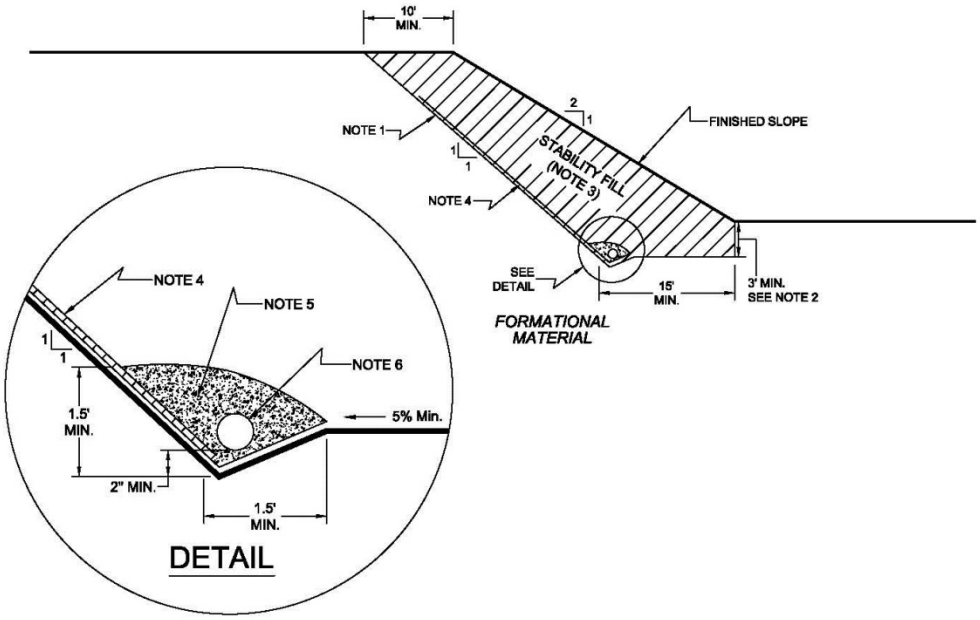

NOTES:

1.....EXCAVATE BACKCUT AT 1:1 INCLINATION (UNLESS OTHERWISE NOTED).

2.....BASE OF STABILITY FILL TO BE 3 FEET INTO FORMATIONAL MATERIAL, SLOPING A MINIMUM 5% INTO SLOPE.

3.....STABILITY FILL TO BE COMPOSED OF PROPERLY COMPACTED GRANULAR SOIL.

4.....CHIMNEY DRAINS TO BE APPROVED PREFABRICATED CHIMNEY DRAIN PANELS (MIRADRAIN G200N OR EQUIVALENT) SPACED APPROXIMATELY 20 FEET CENTER TO CENTER AND 4 FEET WIDE. CLOSER SPACING MAY BE REQUIRED IF SEEPAGE IS ENCOUNTERED.

5.....FILTER MATERIAL TO BE 3/4-INCH, OPEN-GRADED CRUSHED ROCK ENCLOSED IN APPROVED FILTER FABRIC (MIRAFI 140NC).

6.....COLLECTOR PIPE TO BE 4-INCH MINIMUM DIAMETER, PERFORATED, THICK-WALLED PVC SCHEDULE 40 OR EQUIVALENT, AND SLOPED TO DRAIN AT 1 PERCENT MINIMUM TO APPROVED OUTLET.

NO SCALE

7.3 The actual subdrain locations will be evaluated in the field during the remedial grading operations. Additional drains may be necessary depending on the conditions observed and the requirements of the local regulatory agencies. Appropriate subdrain outlets should be evaluated prior to finalizing 40-scale grading plans.

7.4 *Rock* fill or *soil-rock* fill areas may require subdrains along their down-slope perimeters to mitigate the potential for buildup of water from construction or landscape irrigation. The subdrains should be at least 6-inch-diameter pipes encapsulated in gravel and filter fabric. *Rock* fill drains should be constructed using the same requirements as canyon subdrains.

7.5 Prior to outletting, the final 20-foot segment of a subdrain that will not be extended during future development should consist of non-perforated drainpipe. At the non-perforated/ perforated interface, a seepage cutoff wall should be constructed on the downslope side of the pipe.

TYPICAL CUT OFF WALL DETAIL

FRONT VIEW

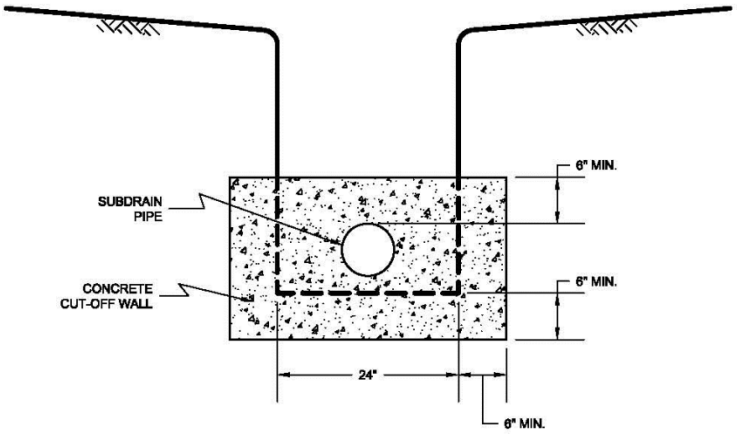

NO SCALE

SIDE VIEW

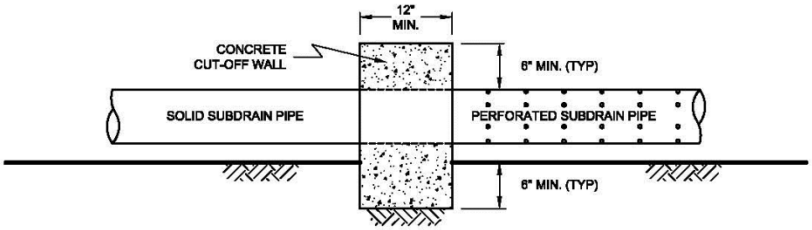

NO SCALE

7.6 Subdrains that discharge into a natural drainage course or open space area should be provided with a permanent headwall structure.

TYPICAL HEADWALL DETAIL

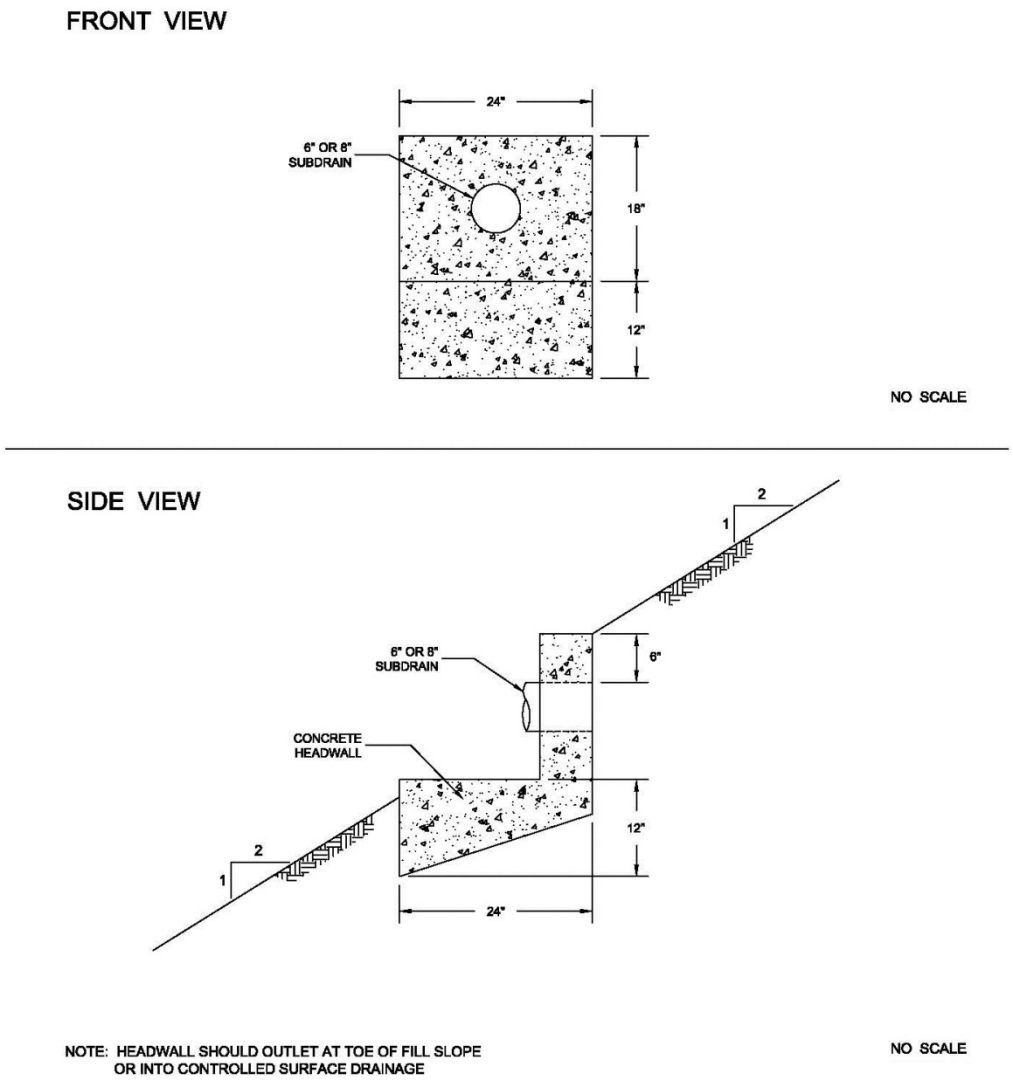

7.7 The final grading plans should show the location of the proposed subdrains. After completion of remedial excavations and subdrain installation, the project civil engineer should survey the drain locations and prepare an “as-built” map showing the drain locations. The final outlet and connection locations should be determined during grading operations. Subdrains that will be extended on adjacent projects after grading can be placed on formational material and a vertical riser should be placed at the end of the subdrain. The grading contractor should consider videoing the subdrains shortly after burial to check proper installation and functionality. The contractor is responsible for the performance of the drains.

8. OBSERVATION AND TESTING

8.1 The Consultant shall be the Owner's representative to observe and perform tests during clearing, grubbing, filling, and compaction operations. In general, no more than 2 feet in vertical elevation of *soil* or *soil-rock* fill should be placed without at least one field density test being performed within that interval. In addition, a minimum of one field density test should be performed for every 2,000 cubic yards of *soil* or *soil-rock* fill placed and compacted.

8.2 The Consultant should perform a sufficient distribution of field density tests of the compacted *soil* or *soil-rock* fill to provide a basis for expressing an opinion whether the fill material is compacted as specified. Density tests shall be performed in the compacted materials below any disturbed surface. When these tests indicate that the density of any layer of fill or portion thereof is below that specified, the particular layer or areas represented by the test shall be reworked until the specified density has been achieved.

8.3 During placement of *rock* fill, the Consultant should observe that the minimum number of passes have been obtained per the criteria discussed in Section 6.3.3. The Consultant should request the excavation of observation pits and may perform plate bearing tests on the placed *rock* fills. The observation pits will be excavated to provide a basis for expressing an opinion as to whether the *rock* fill is properly seated and sufficient moisture has been applied to the material. When observations indicate that a layer of *rock* fill or any portion thereof is below that specified, the affected layer or area shall be reworked until the *rock* fill has been adequately seated and sufficient moisture applied.

8.4 A settlement monitoring program designed by the Consultant may be conducted in areas of *rock* fill placement. The specific design of the monitoring program shall be as recommended in the Conclusions and Recommendations section of the project Geotechnical Report or in the final report of testing and observation services performed during grading.

8.5 We should observe the placement of subdrains, to check that the drainage devices have been placed and constructed in substantial conformance with project specifications.

8.6 Testing procedures shall conform to the following Standards as appropriate:

8.6.1 Soil and Soil-Rock Fills:

8.6.1.1 Field Density Test, ASTM D 1556, *Density of Soil In-Place By the Sand-Cone Method.*

8.6.1.2 Field Density Test, Nuclear Method, ASTM D 6938, *Density of Soil and Soil-Aggregate In-Place by Nuclear Methods (Shallow Depth).*

8.6.1.3 Laboratory Compaction Test, ASTM D 1557, *Moisture-Density Relations of Soils and Soil-Aggregate Mixtures Using 10-Pound Hammer and 18-Inch Drop*.

8.6.1.4. Expansion Index Test, ASTM D 4829, *Expansion Index Test*.

9. PROTECTION OF WORK

9.1 During construction, the Contractor shall properly grade all excavated surfaces to provide positive drainage and prevent ponding of water. Drainage of surface water shall be controlled to avoid damage to adjoining properties or to finished work on the site. The Contractor shall take remedial measures to prevent erosion of freshly graded areas until such time as permanent drainage and erosion control features have been installed. Areas subjected to erosion or sedimentation shall be properly prepared in accordance with the Specifications prior to placing additional fill or structures.

9.2 After completion of grading as observed and tested by the Consultant, no further excavation or filling shall be conducted except in conjunction with the services of the Consultant.

10. CERTIFICATIONS AND FINAL REPORTS

10.1 Upon completion of the work, Contractor shall furnish Owner a certification by the Civil Engineer stating that the lots and/or building pads are graded to within 0.1 foot vertically of elevations shown on the grading plan and that all tops and toes of slopes are within 0.5 foot horizontally of the positions shown on the grading plans. After installation of a section of subdrain, the project Civil Engineer should survey its location and prepare an *as-built* plan of the subdrain location. The project Civil Engineer should verify the proper outlet for the subdrains and the Contractor should ensure that the drain system is free of obstructions.

10.2 The Owner is responsible for furnishing a final as-graded soil and geologic report satisfactory to the appropriate governing or accepting agencies. The as-graded report should be prepared and signed by a California licensed Civil Engineer experienced in geotechnical engineering and by a California Certified Engineering Geologist, indicating that the geotechnical aspects of the grading were performed in substantial conformance with the Specifications or approved changes to the Specifications.

LIST OF REFERENCES

Kennedy, M. P., and Tan, S. S., (2005), *Geologic Map of the San Diego 30'x60' Quadrangle, California,* California Geological Survey, Regional Geologic Map Series, 1:100,000, Map No. 3;

Risk Engineering (2011), *EZ-FRISK (version 7.62)*, software package used to perform site-specific earthquake hazard analyses. Accessed November 26, 2018;

SEAOCC (2018), *Seismic Design Maps*, website interface that queries the U.S. Geological Survey (USGS) web servers and retrieves the seismic design variables using ASCE 7-16, ASCE 7-10, ASCE 41-13, ASCE 41-17, IBC 2015, IBC 2012, NEHRP-2015, and NEHRP 2009 seismic design map data, http://seismicmaps.org;

USGS (2014), *U.S. Seismic Design Maps Web Application (version 3.1.0)*, http://earthquake.usgs.gov/designmaps/us/application.php. Accessed November 26, 2018;

USGS (2016)*, Quaternary Fault and Fold Database of the United States:* U.S. Geological Survey website, http://earthquakes,usgs.gov/hazards/qfaults, accessed November 26, 2018.