APPENDIX G

TRANSPORTATION IMPACT AND ACCESS ANALYSIS AND PARKING MANAGEMENT PLAN

This page intentionally left blank

CEQA TRANSPORTATION IMPACT AND ACCESS ANALYSIS

MAIN STREET MEDICAL OFFICE BUILDING

CITY OF ORANGE, CALIFORNIA

LSA

June 2020

CEQA TRANSPORTATION IMPACT AND ACCESS ANALYSIS

MAIN STREET MEDICAL OFFICE BUILDING

CITY OF ORANGE, CALIFORNIA

Submitted to:

Pietro Martinez
Pacific Medical Buildings
3394 Carmel Mountain Road, Suite 200
San Diego, California 92121

Prepared by:

LSA
20 Executive Park, Suite 200
Irvine, California 92614
(949) 553·0666

Project No. PMB2001

LSA

June 2020

TABLE OF CONTENTS

INTRODUCTION 3
PROJECT DESCRIPTION 5
Study Area Boundary 5
CEQA IMPACT ANALYSIS 5
PERFORMANCE CRITERIA 7
EXISTING CONDITIONS 8
Existing Setting 8
Existing Traffic Volumes and Levels of Service 8
PROPOSED PROJECT 11
Trip Generation 11
Trip Distribution and Assignment 11
EXISTING PLUS PROJECT CONDITIONS 13
SITE ACCESS AND QUEUEING ANALYSIS 18
CONCLUSIONS 19

APPENDICES

A: Existing Traffic Counts
B: ICU Level of Service Worksheets
C: HCM Level of Service Worksheets

FIGURES AND TABLES

FIGURES

Figure 1: Project Location and Study Area Intersections 4
Figure 2: Site Plan 6
Figure 3: Existing Peak-Hour Volumes 9
Figure 4a: Project Trips 12
Figure 4b: Redistributed Trips 15
Figure 4c: Net Project Trips 16
Figure 5: Existing Plus Project Peak-Hour Volumes 17

TABLES

Table A: Existing Intersection LOS Summary 10
Table B: Existing Roadway Segment LOS Summary 10
Table C: Project Trip Generation 11
Table D: Existing Plus Project Intersection LOS Summary 13
Table E: Existing Plus Project Segment LOS Summary 14

MAIN STREET MEDICAL OFFICE BUILDING
CEQA TRANSPORTATION IMPACT AND ACCESS ANALYSIS

LSA has prepared the following analysis to identify the traffic and access impacts resulting from the construction of a four-story, 137,500-square-foot (sf) medical office building (project) at the northeast corner of Main Street and Stewart Drive in the City of Orange (City), County of Orange, California. LSA has prepared this analysis consistent with the *City of Orange Traffic Impact Analysis Guidelines* (August 2007) and the updated requirements of the California Environmental Quality Act (CEQA). The scope of work for this analysis was reviewed and approved by City Traffic Engineering staff (April 2020) prior to its preparation.

Section 21099(b)(2) of the California Public Resources Code states the following:

> "Upon certification of the guidelines by the Secretary of the Natural Resources Agency pursuant to this section, automobile delay, as described solely by level of service or similar measures of vehicular capacity or traffic congestion shall not be considered a significant impact on the environment pursuant to this division, except in locations specifically identified in the guidelines, if any."

This certification occurred on December 28, 2018, and vehicle delay and level of service (LOS) analysis have been removed from consideration under CEQA. With the current *State CEQA Guidelines*, transportation impacts are to be evaluated based on a project's effect on vehicle miles traveled (VMT). The City of Orange is in the process of preparing revised traffic impact guidelines by the July 1, 2020, deadline. However, simultaneous with clearance of the revised *State CEQA Guidelines*, the Governor's Office of Planning and Research (OPR) released the *Technical Advisory for Evaluating Transportation Impacts under CEQA* (OPR, December 2018). This State document provides sufficient guidance to permit the evaluation of project transportation impacts for the purposes of compliance with CEQA.

In order to ensure the preservation of the adjacent roadway network consistent with the City of Orange General Plan (2010), an LOS analysis was also prepared focusing on the daily, a.m. peak-hour, and p.m. peak-hour LOS at six intersections. Project impacts were determined based on analysis of the following scenarios:

1. Existing
2. Existing Plus Project

INTRODUCTION

The existing 1.1-acre project area is located at 331, 353, and 393 Main Street and currently occupied by a 12-room motel and 20,882 sf of medical office use with associated parking areas. As shown on Figure 1, the project site is bounded by Stewart Drive to the south, Main Street to the west, a partially vacant property to the north, and a parking structure and medical offices to the east. Columbia Place, which serves as a private driveway to the adjacent parking structure, bisects the project site.



LSA

LEGEND

- Project Site
- # - Study Area Intersection

N

0 165 330

FEET

SOURCE: Google Earth

FIGURE 1

Main Street Medical Office Building

Project Location and Study Area Intersections

I:\PMB2001\G\Traffic\Location&Ints.cdr (6/15/2020)

Commercial retail and restaurant uses are located to the west and south of the project site across Main Street and Stewart Drive, respectively. The project site is located in the southern portion of Orange, approximately 0.3 mile north of State Route (SR) 22.

PROJECT DESCRIPTION

The project would construct a four-story, 137,500 sf medical office building with up to five levels of subterranean parking. Access to the project would include the existing unsignalized intersection at Main Street/Columbia Place and a left-out exit only driveway intersecting Palmyra Avenue. Medical outpatient services would occupy the medical office building.

Figure 2 provides a site plan for the proposed medical office building project.

Study Area Boundary

Also illustrated on Figure 1, the study area includes the following intersections within the project vicinity:

1. Main Street/Almond Avenue
2. Main Street/Palmyra Avenue
3. Main Street/Columbia Place
4. Main Street/Culver Avenue-Stewart Drive
5. Main Street/La Veta Avenue
6. Project Driveway/Palmyra Avenue

CEQA IMPACT ANALYSIS

In order to determine whether a project has a significant transportation impact under CEQA, the traffic analysis must determine whether the project would conflict or be inconsistent with *State CEQA Guidelines* Section 15064.3 subdivision (b). Section 15064.3(b) of the California Code of Regulations states the following:

> "Generally, vehicle miles traveled is the most appropriate measure of transportation impacts. For the purposes of this section, 'vehicle miles traveled' refers to the amount and distance of automobile travel attributable to the project."

Specifically related to land use projects, this section indicates that, "Generally, projects within one-half mile of either an existing major transit stop or a stop along an existing high quality transit corridor should be presumed to cause a less than significant transportation impact." California Public Resources Code Section 21155(b) defines a high quality transit corridor as "fixed route bus service with service intervals no longer than 15 minutes during peak commute hours."

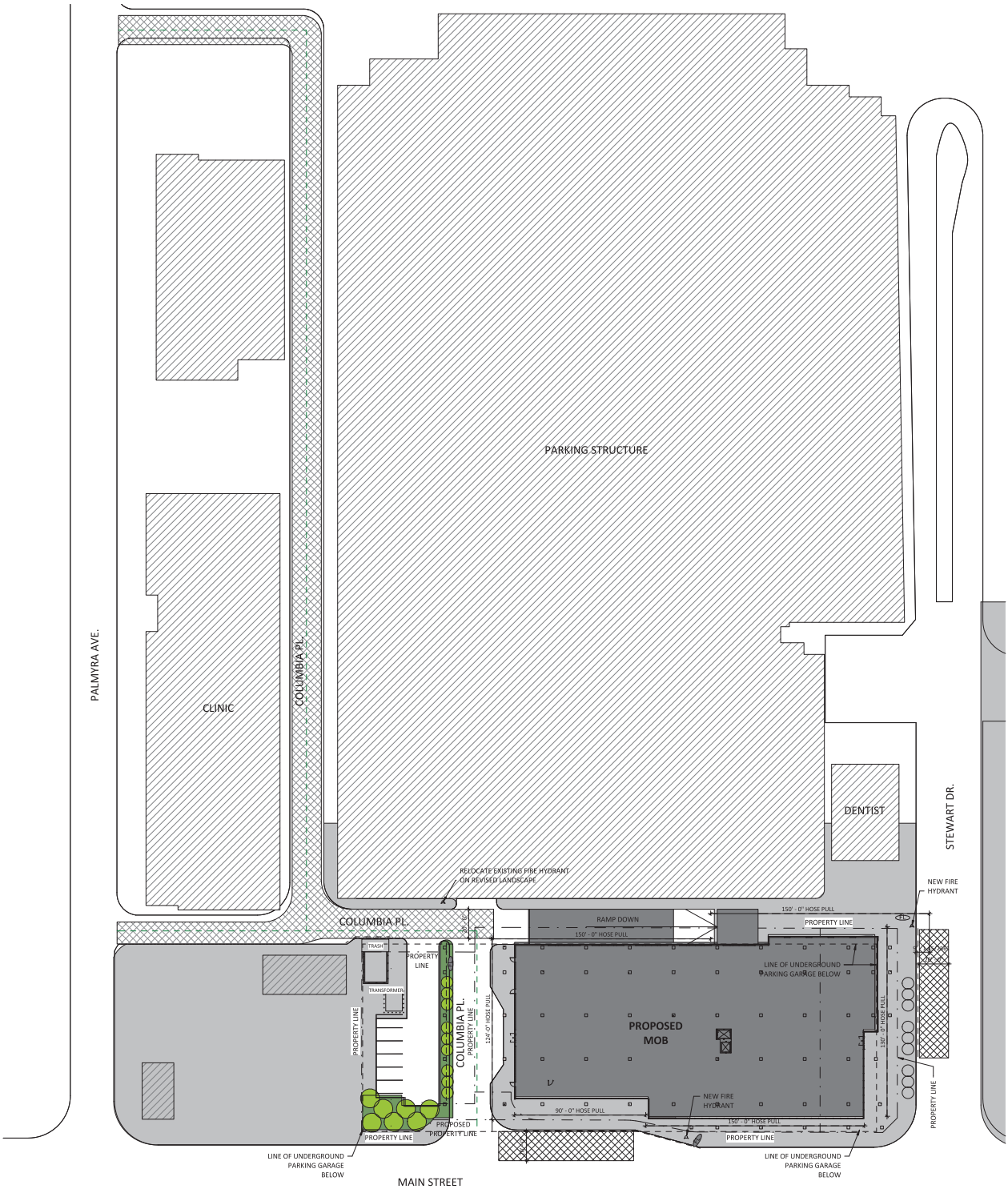

LSA

FIGURE 2

N

0 53 106
FEET

SOURCE: Boulder Associates

I:\PMB2001\G\Traffic\Location&Ints.cdr (6/15/2020)

Main Street Medical Office Building
Site Plan

The Orange County Transportation Authority (OCTA) operates fixed route bus service within Orange. OCTA Routes 53 and 453 serve Main Street adjacent to the project site. According to OCTA, service intervals along Main Street are no longer than 15 minutes during peak commute hours. Route 453 travels between the Orange Transportation Center (Metrolink and Amtrak station) and the St. Joseph Hospital area. It operates along the same route as Route 53 but does not serve every bus stop. The nearest northbound and southbound bus stops, both of which serve Routes 53 and 453, are located just south of Culver Avenue-Stewart Drive. Both bus stops are no more than 800 feet from the project site. Because the project is located within 0.50 mile of an existing high quality transit corridor, the project is presumed to cause a less than significant transportation impact. As such, no further VMT calculation would be required.

As stated previously, a vehicle LOS and access analysis was also prepared to ensure the preservation of the adjacent roadway network consistent with the City of Orange General Plan. This analysis is presented below.

PERFORMANCE CRITERIA

To determine the peak-hour intersection operations at signalized intersections within the study area, intersection capacity utilization (ICU) methodology was used. The ICU methodology compares the volume-to-capacity (v/c) ratios of conflicting turn movements at an intersection, sums these critical conflicting v/c ratios for each intersection approach, and determines the overall ICU. The Highway Capacity Manual (HCM) methodology calculates the delay experienced by vehicles passing through the intersection. For two-way stop controlled intersections, this analysis reports the delay for the most delayed approach.

The resulting ICU or delay is expressed in terms of LOS, where LOS A represents free-flow activity and LOS F represents overcapacity operation.

According to the City's Traffic Impact Analysis Guidelines, LOS at an intersection is considered unsatisfactory when the ICU exceeds 0.90 (LOS D). The relationship of ICU (v/c ratio) to LOS is demonstrated in the following table.

LOS	Signalized ICU (v/c ratio)	Unsignalized Intersection Delay (seconds)
A	0.00–0.60	≤10.0
B	0.61–0.70	>10.0 and ≤15.0
C	0.71–0.80	>15.0 and ≤25.0
D	0.81–0.90	>25.0 and ≤35.0
E	0.91–1.00	>35.0 and ≤50.0
F	> 1.00	>50.0

ICU = intersection capacity utilization
LOS = level of service
v/c = volume-to-capacity

A project would be responsible for creating a deficiency at a signalized intersection when the LOS changes from an acceptable LOS (LOS A through D) to LOS E or F, or if the project increases the ICU by 0.01 or more at an already unacceptable LOS.

A project would be responsible for creating a deficiency to an unsignalized intersection when the LOS changes from an acceptable LOS (LOS A through D) to LOS E or F, or if the effect of the development traffic is greater than or equal to 10 percent of the existing delay at an already unacceptable LOS and the intersection meets a signal warrant.

Similar to the ICU methodology for signalized intersections, roadway segment v/c ratios were determined using the City's daily roadway capacities. Facility types and daily roadway capacities were obtained from the City's General Plan Circulation and Mobility Element (2015). The following table illustrates daily capacities for roadways within the study area.

Facility Type	Number of Lanes	Daily Capacity
Major Arterial	6 Divided	56,300
Primary Arterial	4 Divided	37,500
Secondary Arterial	4 Undivided	24,000
Collector	2 Undivided	12,000

Sources: City of Orange General Plan Circulation and Mobility Element (City of Orange 2015).

EXISTING CONDITIONS

Existing Setting

The project site is bounded by Stewart Drive to the south, Main Street to the west, and Columbia Place, which serves as a private driveway to the adjacent parking structure, bisecting the project site. Main Street is designated as a Major Arterial in the City's General Plan. Major Arterials are six-lane, divided roadways with medians or continuous two-way left-turn lanes that facilitate circulation within the City and also prohibit on-street, curbside parking. In the project vicinity, Palmyra Avenue is designated as a Collector Street. La Veta Avenue is designated as a Major Arterial west of Batavia Street.

Existing Traffic Volumes and Levels of Service

An independent data collection company collected existing turn-movement data for the study area intersections on Thursday, February 27, 2020, which was prior to the State's stay at home order. This traffic data, therefore, represent typical conditions. Existing roadway segment count data were collected from the OCTA 2019 Traffic Flow Map. The existing traffic data are provided in Appendix A. Figure 3 shows the existing peak-hour volumes at the study area intersections. It should be noted that illegal northbound right-turn volumes were observed at the One-Way Project Driveway/ Palmyra Avenue intersection. The proposed project would construct a raised turn diverter at this location to prevent northbound right-turns in the future. Therefore, the northbound right-turn volume has been redistributed to the northbound left-turn movement and other study area intersections in the existing plus project condition. Similarly, westbound traffic on Palmyra Avenue was observed using this driveway to complete U-turns. The raised turn diverter and increased traffic due to the proposed project are expected to reduce the ability to complete these turns at this location in the future.



1 Main Street/Almond Avenue	2 Main Street/Palmyra Avenue	3 Main Street/Columbia Place
4 Main Street/Culver Avenue-Stewart Drive	5 Main Street/La Veta Avenue	6 One-Way Proj Dwy/Palmyra Avenue

LSA

XXX/YYY AM/PM Volumes

N

FIGURE 3

Main Street Medical Office Building
Existing Traffic Volumes

P:\PMB2001\Traffic\Figures\Existing Volumes.xls (6/15/2020)

The ICU and HCM worksheets for existing (and all future) conditions are included in Appendices B and C, respectively. Summaries of existing intersection and segment LOS are presented in Table A and Table B, respectively. As these tables indicate, all study area intersections and roadway segments currently operate at satisfactory LOS (LOS D or better). At the intersection of Main Street/ Columbia Place, the eastbound approach is the most delayed. The approximately 30-foot driveway is not striped for the two exiting lanes. Therefore, this analysis treats the driveway as one inbound and one outbound lane. Eastbound right-turning vehicles could, therefore, be delayed at the intersection by left-turning vehicles. It should be noted that vehicles can traverse the shopping center parking lot to exit onto Palmyra Avenue directly. This route is likely chosen by most drivers familiar with the shopping center given the very low volume of eastbound left-turns identified in the turn-movement data.

Table A: Existing Intersection LOS Summary

Study Area No.	Intersection	AM Peak Hour		PM Peak Hour	
		ICU/Delay	LOS	ICU/Delay	LOS
1	Main Street/Almond Avenue	0.50	A	0.49	A
2	Main Street/Palmyra Avenue	0.52	A	0.49	A
3	Main Street/Columbia Place (unsignalized)	20.2 sec	C	22.1 sec	C
4	Main Street/Culver Avenue-Stewart Drive	0.45	A	0.50	A
5	Main Street/La Veta Avenue	0.55	A	0.59	A
6	One-Way Project Driveway/Palmyra Avenue (unsignalized)	9.3 sec	A	9.4 sec	A

ICU = Intersection Capacity Utilization
LOS = level of service
sec = seconds

Table B: Existing Roadway Segment LOS Summary

Study Area No.	Roadway Segment	Classification	Capacity	Existing		
				ADT	V/C	LOS
1	Main Street north of Almond Avenue	Major Arterial (4 lanes, divided)	56,300	31,000	0.55	A
2	Main Street between Almond Avenue and Palmyra Avenue	Major Arterial (4 lanes, divided)	56,300	31,000	0.55	A
3	Main Street between Palmyra Avenue and Culver Avenue-Stewart Drive	Major Arterial (4 lanes, divided)	56,300	31,000	0.55	A
4	Main Street between Culver Avenue-Stewart Drive and La Veta Avenue	Major Arterial (4 lanes, divided)	56,300	31,000	0.55	A
5	Main Street south of La Veta Avenue	Major Arterial (4 lanes, divided)	56,300	31,000	0.55	A
6	La Veta Avenue west of Main Street	Major Arterial (4 lanes, divided)	56,300	21,000	0.37	A
7	La Veta Avenue east of Main Street	Major Arterial (4 lanes, divided)	56,300	26,000	0.46	A

= exceeds satisfactory LOS D

[1] ≥ 0.01 V/C project increase at segment operating at unsatisfactory LOS E or F = significant impact
ADT = average daily traffic volume
LOS = level of service
V/C = volume-to-capacity ratio

PROPOSED PROJECT

Trip Generation

For the purposes of disclosing the approximate number of trips generated by the proposed project, trip rates contained in the Institute of Transportation Engineers (ITE) 2017 *Trip Generation Manual*, 10th Edition, were used to calculate the potential trip generation for the project and replaced land uses. Table C shows the proposed project trip generation.

Table C: Project Trip Generation

Land Use	Size	Unit	ADT	AM Peak Hour			PM Peak Hour		
				In	Out	Total	In	Out	Total
Trip Rates[1]									
Medical Office		TSF	34.80	2.17	0.61	2.78	0.97	2.49	3.46
Motel		Rooms	3.35	0.14	0.24	0.38	0.21	0.17	0.38
Existing Trip Generation									
Medical Office	20.882	TSF	727	45	13	58	20	52	72
Motel	12	Rooms	40	2	3	5	3	2	5
Total			767	47	16	63	23	54	77
Project Trip Generation									
Medical Office	137.500	TSF	4,785	298	84	382	133	342	476
Net Trip Generation			**4,018**	**251**	**68**	**319**	**110**	**288**	**399**

[1] Trip rates referenced from the Institute of Transportation Engineers (ITE) *Trip Generation Manual,* 10th Edition (2017).
Land Use Code (720) - Medical-Dental Office Building
Directional Distribution (In/Out) of Total Rate: Daily (50/50), AM Peak Hour (78/22), PM Peak Hour (28/72)
Land Use Code (320) - Motel
Directional Distribution (In/Out) of Total Rate: Daily (50/50), AM Peak Hour (37/63), PM Peak Hour (54/46)
ADT = average daily traffic
TSF = thousand square feet

As shown in Table C, the 137,500 sf medical office building is forecast to generate 4,785 average daily trips (ADT), 382 a.m. peak-hour trips (298 inbound and 84 outbound), and 476 p.m. peak-hour trips (133 inbound and 342 outbound). Taking into account the existing 20,882 sf medical office use and 12-room motel, the net trip generation would be 4,018 ADT, 319 a.m. peak-hour trips (251 inbound and 68 outbound), and 399 p.m. peak-hour trips (110 inbound and 288 outbound).

Trip Distribution and Assignment

The regional project trip distribution and assignment for a.m. and p.m. peak hours are illustrated on Figure 4a. City staff reviewed and approved these percentages prior to the completion of the analysis (May 2020). Project distribution was derived considering the existing traffic volumes, specifically turning movements at the intersection of Main Street/Culver Avenue-Stewart Drive. On average, 40 percent of vehicles were traveling to/from the north and 60 percent of vehicles were traveling to/from the south.



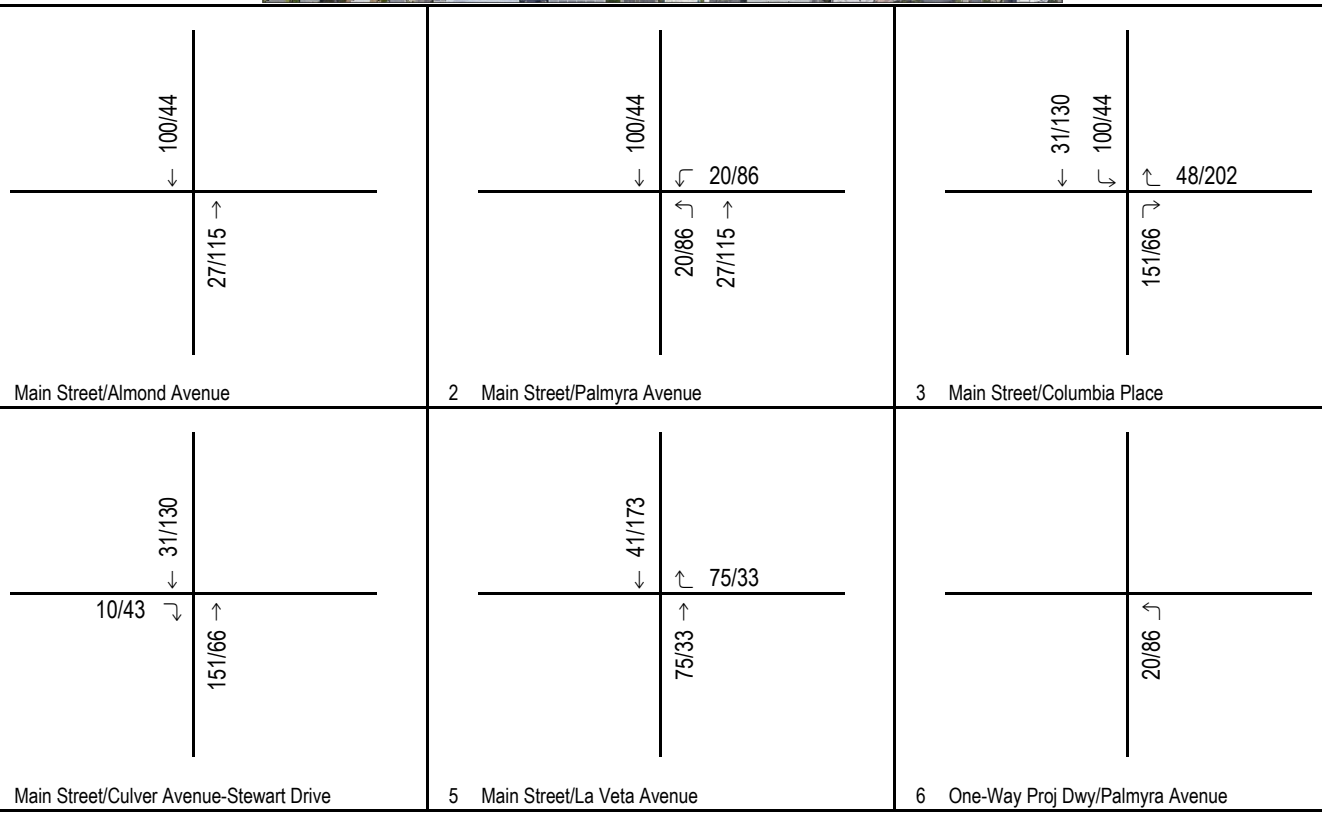

LSA

FIGURE 4a

N

XXX/YYY AM/PM Volumes

Trip Distribution Percentages

Main Street Medical Office Building
Project Trip Distribution and Assignment

As previously mentioned, existing traffic volumes illustrate illegal northbound right-turn volumes at the One-Way Project Driveway, which prohibits right-turn and through movements. As such, trips making an illegal northbound right-turn have been removed and redistributed to the northbound left-turn movement and other study area intersections. Figure 4b is provided to illustrate the redistribution at each affected study area intersection, and Figure 4c is provided to show the net project trip assignment.

EXISTING PLUS PROJECT CONDITIONS

To demonstrate the effect the project would have on the study area intersections and roadway segments, an existing plus project LOS analysis was prepared. Net project trips, the effect of trip generation, and redistributed traffic were added to existing conditions.

Figure 5 illustrates the existing plus project peak-hour volumes. Table D and Table E present the summaries of the existing plus project intersection and segment LOS, respectively. Table D indicates that, at the intersection of Main Street/Columbia Place in the p.m. peak hour, the worst performing approach (the westbound approach) would experience average delay of 43.6 seconds with the addition of project traffic. At the intersection of Main Street/Columbia Place, default settings in the Synchro software do not account for the effect of the adjacent, coordinated traffic signals or the effects of right-turn channelization at the westbound approach. LSA prepared traffic simulations using SimTraffic which accounted for the gaps in traffic created by the adjacent traffic signals. The results showed a 25 percent improvement in the performance of the westbound approach. When the effects of the existing channelization are accounted for, westbound vehicles can turn into the curbside lane while eastbound left-turns simultaneously utilize either of the remaining two lanes, which decreases the delay of the eastbound approach. Therefore, it is anticipated that this intersection will perform at a satisfactory LOS. As indicated in Table D, all other study area intersections would continue to operate at satisfactory LOS (LOS D or better) as well. As indicated in Table E, all study area roadway segments would continue to operate at satisfactory LOS (LOS D or better).

Table D: Existing Plus Project Intersection LOS Summary

Study Area No.	Intersection	Baseline				Plus Project			
		AM Peak Hour		PM Peak Hour		AM Peak Hour		PM Peak Hour	
		ICU/ Delay	LOS	ICU/ Delay	LOS	ICU/ Delay	LOS	ICU/ Delay	LOS
1	Main Street/Almond Avenue	0.50	A	0.49	A	0.52	A	0.51	B
2	Main Street/Palmyra Avenue	0.52	A	0.49	A	0.57	A	0.57	A
3	Main Street/Columbia Place (unsignalized)	20.2 sec	C	22.1 sec	C	20.8 sec	C	43.6 sec[1]	E
4	Main Street/Culver Avenue-Stewart Drive	0.45	A	0.50	A	0.47	A	0.53	A
5	Main Street/La Veta Avenue	0.55	A	0.59	A	0.59	A	0.63	B
6	One-Way Project Driveway/Palmyra Avenue (unsignalized)	9.3 sec	A	9.4 sec	A	9.6 sec	A	10.3 sec	B

ICU = Intersection Capacity Utilization
LOS = level of service
sec = seconds
[1] SimTraffic simulation shows a 25 percent reduction in queueing and, therefore, delay

Table E: Existing Plus Project Segment LOS Summary

Study Area No.	Roadway Segment	Classification	Capacity	Existing			Project	Existing Plus Project			Δ V/C	Creates Deficiency?[1]
				ADT	V/C	LOS	ADT	ADT	V/C	LOS		
1	Main Street north of Almond Avenue	Major Arterial (4 lanes, divided)	56,300	31,000	0.55	A	1,608	32,608	0.58	A	0.03	No
2	Main Street between Almond Avenue and Palmyra Avenue	Major Arterial (4 lanes, divided)	56,300	31,000	0.55	A	1,608	32,608	0.58	A	0.03	No
3	Main Street between Palmyra Avenue and Culver Avenue-Stewart Drive	Major Arterial (4 lanes, divided)	56,300	31,000	0.55	A	2,613	33,613	0.60	A	0.05	No
4	Main Street between Culver Avenue-Stewart Drive and La Veta Avenue	Major Arterial (4 lanes, divided)	56,300	31,000	0.55	A	2,411	33,411	0.59	A	0.04	No
5	Main Street south of La Veta Avenue	Major Arterial (4 lanes, divided)	56,300	31,000	0.55	A	1,808	32,808	0.58	A	0.03	No
6	La Veta Avenue west of Main Street	Major Arterial (4 lanes, divided)	56,300	21,000	0.37	A	0	21,000	0.37	A	0.00	No
7	La Veta Avenue east of Main Street	Major Arterial (4 lanes, divided)	56,300	26,000	0.46	A	603	26,603	0.47	A	0.01	No

= exceeds satisfactory LOS D

[1] ≥ 0.01 V/C project increase at segment operating at unsatisfactory LOS E or F = project deficiency

ADT = average daily traffic volume

LOS = level of service

V/C = volume-to-capacity ratio



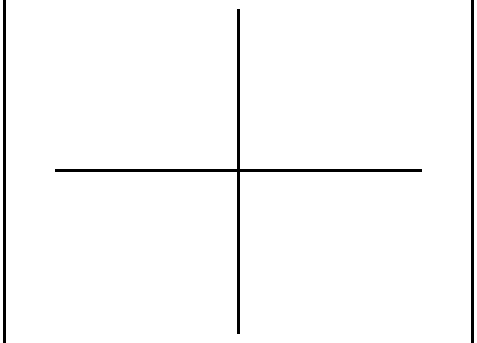

1 Main Street/Almond Avenue

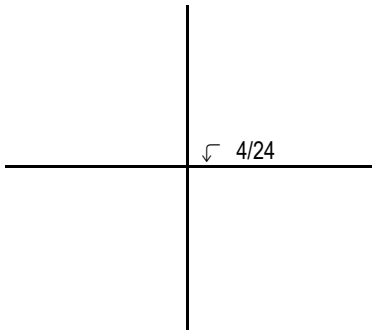

2 Main Street/Palmyra Avenue

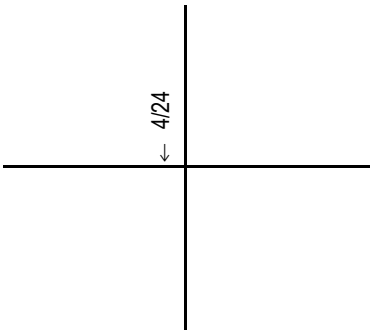

3 Main Street/Columbia Place

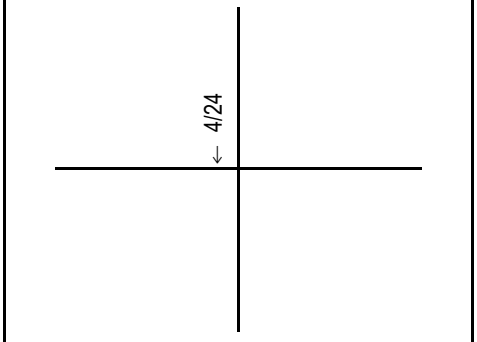

4 Main Street/Culver Avenue-Stewart Drive

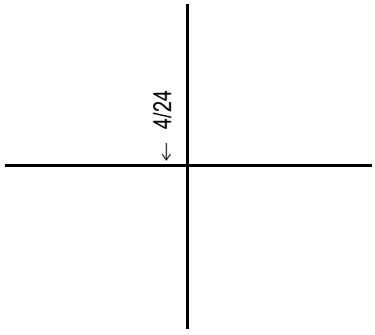

5 Main Street/La Veta Avenue

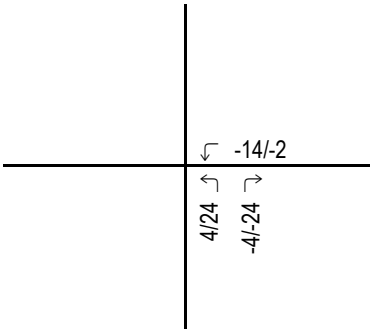

6 One-Way Proj Dwy/Palmyra Avenue

LSA

FIGURE 4b

XXX/YYY AM/PM Volumes

N

Main Street Medical Office Building
Redistributed Trips Due to Project Design Features

P:\PMB2001\Traffic\Figures\Redistributed Trips.xls (6/15/2020)



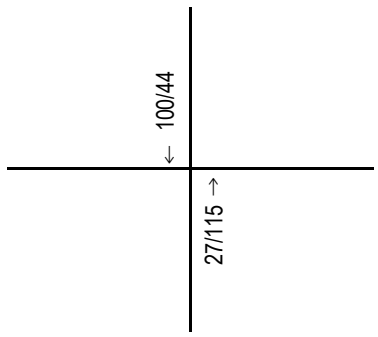

1 Main Street/Almond Avenue

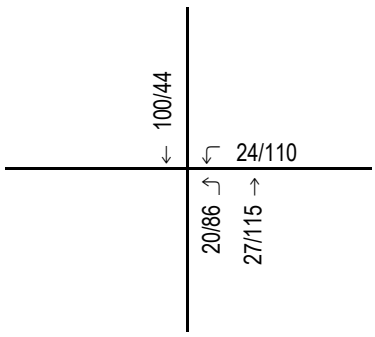

2 Main Street/Palmyra Avenue

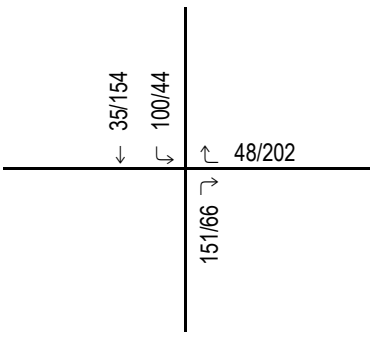

3 Main Street/Columbia Place

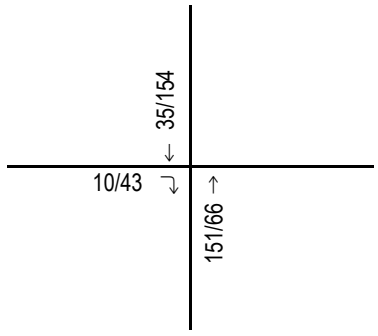

4 Main Street/Culver Avenue-Stewart Drive

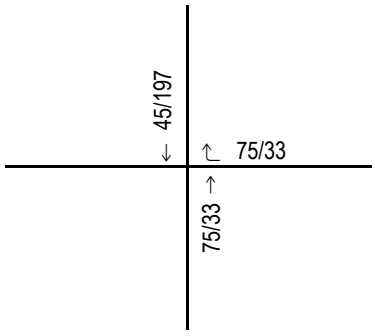

5 Main Street/La Veta Avenue

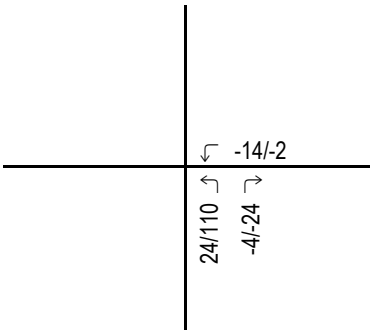

6 One-Way Proj Dwy/Palmyra Avenue

LSA

FIGURE 4c

N

XXX/YYY AM/PM Volumes

Main Street Medical Office Building
Net Project Trips



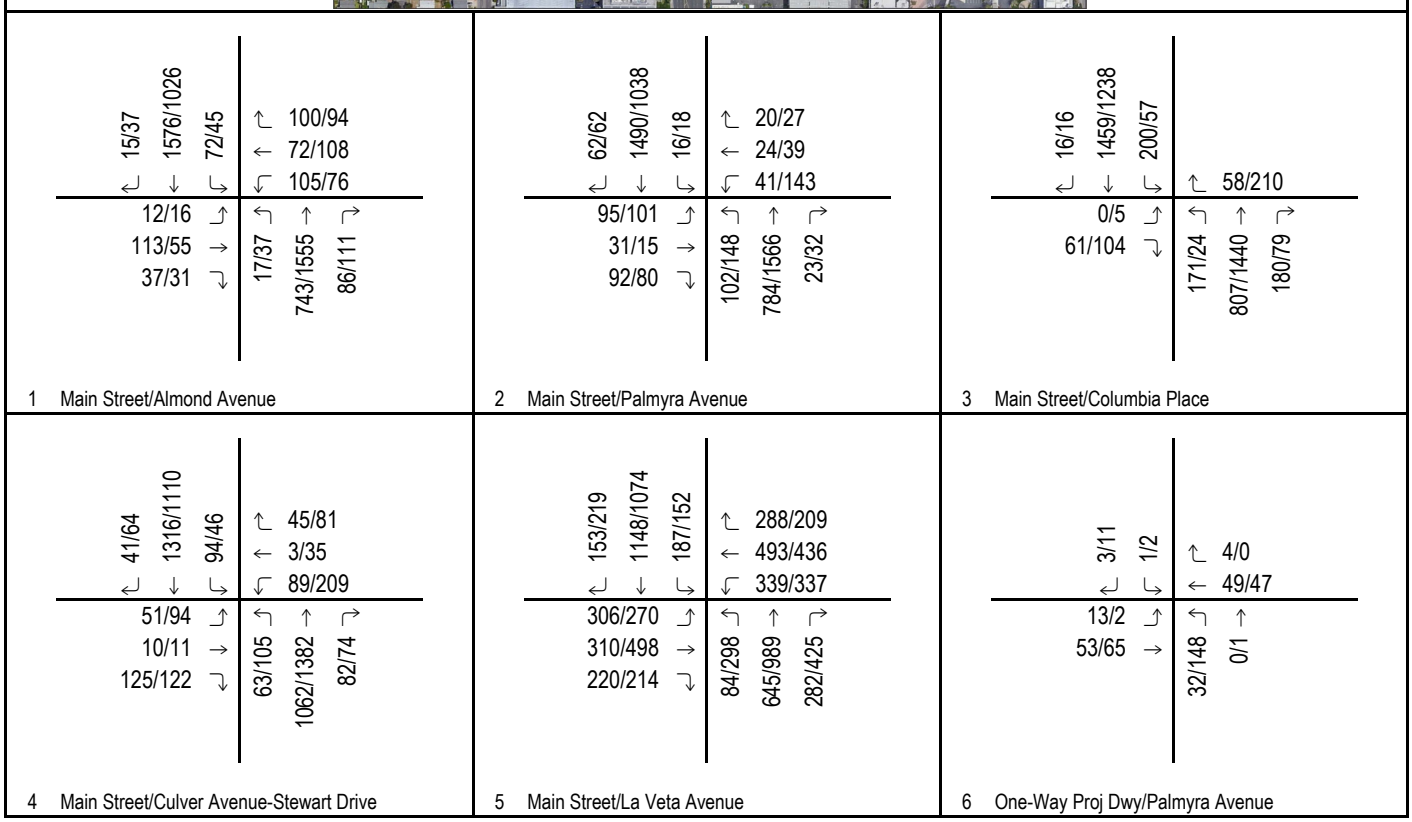

LSA

FIGURE 5

XXX/YYY AM/PM Volumes

N

Main Street Medical Office Building

Existing Plus Project Traffic Volumes

P:\PMB2001\Traffic\Figures\Existing Plus Project Volumes.xls (6/26/2020)

SITE ACCESS AND QUEUEING ANALYSIS

Access to the project site is provided via Columbia Place, which currently serves as a private driveway to an employee-only entrance of the St. Joseph Hospital parking structure. As shown in Figure 2, the project would extend the north-south internal roadway to the south for access to the project's parking structure. From the north-south internal roadway, a one-way drive extends to the north and intersects with Palmyra Avenue.

The Main Street/Columbia Place intersection provides full inbound access to the project site via a northbound right-turn lane, a southbound left-turn lane, and outbound access from the project site via a channelized westbound right-turn only lane. The northbound right-turn pocket is approximately 70 feet. The southbound left-turn pocket is currently back-to-back with the northbound left-turn at Main Street/Palmyra Avenue. Due to this configuration, a 60-foot bay taper is provided along with approximately 50 feet of vehicle storage. Although typical passenger vehicles are 14 to 16 feet, analyses of vehicle queues use a length of 25 feet to account for space between vehicles. Therefore, the southbound left-turn pocket provides sufficient storage for two vehicles. In the westbound (outbound) direction, the intersection of Main Street/Columbia Place permits right turns only. The distance between the intersection with Main Street and the north-south internal roadway is approximately 120 feet.

The one-way drive continuing north from Columbia Place intersects Palmyra Avenue approximately 130 feet from the Main Street/Palmyra Avenue intersection. This intersection is striped indicating that only left turns are permitted exiting the one-way drive. However, in the existing condition, this restriction is only painted, and traffic data showed 4 northbound right-turns in the a.m. peak hour and 24 northbound right-turns in the p.m. peak hour. In order to enhance the current turn restriction and streamline traffic flow along the one-way drive, the project will construct a raised diverter to channelize northbound traffic to left turns only.

While the vehicle LOS analysis concluded that the access intersections (and all study area intersections) would operate at satisfactory LOS with the addition of project traffic, LSA further analyzed vehicle queueing into and out of the project site to confirm the function of the adjacent roadway network.

At the intersection of Main Street/Columbia Place, queues into the project site would likely be highest during the a.m. peak hour when inbound trip generation is highest. The HCM worksheet for this location shows that the northbound right-turn queue is anticipated to be less than one vehicle. The HCM worksheet shows that the 95th percentile queue for the southbound left turn is anticipated to be 3.3 vehicles. However, this queueing analysis is based on an even distribution of vehicle arrivals. In reality, the intersection of Main Street/Columbia Place is less than 250 feet north of the signalized intersection on Main Street/Culver Avenue-Stewart Drive. The traffic signal at the upstream intersection would have the effect of platooning arrivals and creating gaps in arrivals permitting more southbound left turns to be completed. If queueing occurs despite these gaps, it is anticipated that drivers would jump the queue by continuing to the intersection of Main Street/Culver Avenue-Stewart Drive to make a U-turn. Southbound left-turns are not a critical movement at Main Street/Culver Avenue-Stewart Drive, so the additional volume would not change the reported ICU.

At the intersection of Main Street/Columbia Place, queues out of the project site would likely be highest during the p.m. peak hour when outbound trip generation is highest. The SimTraffic queueing analysis for this location shows that the 95th percentile queue for westbound right turns is anticipated to be 101 feet. Therefore, the 120-foot length from the intersection of Main Street/Columbia Place and the north-south internal roadway would be sufficient and project traffic would not obstruct traffic along Columbia Place.

At the intersection of the one-way drive from Columbia Place with Palmyra Avenue, queues out of the project site would also likely be highest during the p.m. peak hour when outbound trip generation is highest. The HCM worksheet for this location shows that the 95th percentile queue for northbound left turns is anticipated to be less than one vehicle. LSA also examined the westbound queue at the adjacent signalized intersection of Main Street/Palmyra Avenue. In the p.m. peak hour, the 95th percentile westbound queue is 107 feet, which is less than the 130-foot length from the Main Street/Palmyra Avenue intersection to the intersection with the one-way drive. Therefore, the westbound queue would not block the one-way drive intersection and the function of the one-way drive would be preserved.

LSA also considered the performance and queueing at the internal intersection that would be formed by the Columbia Place entrance to the St. Joseph parking garage, the ramp into the project's parking garage, and the north-south internal roadway. At this time it is anticipated that the intersection would function as an all-way stop controlled intersection with single lane approaches. To present a more conservative analysis, existing turn volumes at the public roadways were attributed to the St. Joseph parking garage without reduction for the land uses to be replaced. Project trips were added to the entrance of the project's parking garage. Analysis worksheets are provided in Appendix C. The analysis showed that this internal intersection would operate at LOS A in the a.m. peak hour with up to a two vehicle queue in the eastbound direction and LOS A in the p.m. peak hour with up to a two vehicle queue in the northbound direction and a single vehicle queue in the westbound direction.

CONCLUSIONS

This analysis determined that the project is presumed to have a less than significant impact on transportation under CEQA because it is located within a transit priority area.

The analysis also considered the project's effects on vehicle LOS within the vicinity of the project site. Based on traffic volumes collected prior to the State's stay-at-home order and application of the City's LOS methodology, all study area intersections were found to function at satisfactory LOS in the existing and existing plus project conditions. LSA also examined queueing into and out of the project site and determined that project traffic likely can be accommodated within the existing roadway configuration.

APPENDIX A

EXISTING TRAFFIC COUNTS

Counts Unlimited
PO Box 1178
Corona, CA 92878
(951) 268-6268

City of Orange
N/S: Main Street
E/W: Almond Avenue
Weather: Clear

File Name : 01_ORN_Main_Almond AM
Site Code : 00320130
Start Date : 2/27/2020
Page No : 1

Groups Printed- Total Volume

	Main Street Southbound				Almond Avenue Westbound				Main Street Northbound				Almond Avenue Eastbound				
Start Time	Left	Thru	Right	App. Total	Left	Thru	Right	App. Total	Left	Thru	Right	App. Total	Left	Thru	Right	App. Total	Int. Total
07:00 AM	5	251	4	260	22	5	13	40	3	158	11	172	3	18	9	30	502
07:15 AM	7	331	6	344	17	10	16	43	1	159	10	170	5	22	6	33	590
07:30 AM	20	386	2	408	24	9	16	49	3	170	21	194	3	35	9	47	698
07:45 AM	32	342	0	374	27	23	29	79	6	198	32	236	5	53	8	66	755
Total	64	1310	12	1386	90	47	74	211	13	685	74	772	16	128	32	176	2545
08:00 AM	10	400	10	420	36	31	38	105	7	183	15	205	2	14	11	27	757
08:15 AM	10	348	3	361	18	9	17	44	1	165	18	184	2	11	9	22	611
08:30 AM	4	349	2	355	11	14	13	38	3	136	6	145	4	9	12	25	563
08:45 AM	2	245	8	255	15	5	12	32	7	162	5	174	4	10	8	22	483
Total	26	1342	23	1391	80	59	80	219	18	646	44	708	12	44	40	96	2414
Grand Total	90	2652	35	2777	170	106	154	430	31	1331	118	1480	28	172	72	272	4959
Apprch %	3.2	95.5	1.3		39.5	24.7	35.8		2.1	89.9	8		10.3	63.2	26.5		
Total %	1.8	53.5	0.7	56	3.4	2.1	3.1	8.7	0.6	26.8	2.4	29.8	0.6	3.5	1.5	5.5	

	Main Street Southbound				Almond Avenue Westbound				Main Street Northbound				Almond Avenue Eastbound				
Start Time	Left	Thru	Right	App. Total	Left	Thru	Right	App. Total	Left	Thru	Right	App. Total	Left	Thru	Right	App. Total	Int. Total
Peak Hour Analysis From 07:00 AM to 08:45 AM - Peak 1 of 1																	
Peak Hour for Entire Intersection Begins at 07:30 AM																	
07:30 AM	20	386	2	408	24	9	16	49	3	170	21	194	3	35	9	47	698
07:45 AM	**32**	342	0	374	27	23	29	79	6	**198**	**32**	**236**	**5**	**53**	8	**66**	755
08:00 AM	10	**400**	**10**	**420**	**36**	**31**	**38**	**105**	**7**	183	15	205	2	14	**11**	27	**757**
08:15 AM	10	348	3	361	18	9	17	44	1	165	18	184	2	11	9	22	611
Total Volume	72	1476	15	1563	105	72	100	277	17	716	86	819	12	113	37	162	2821
% App. Total	4.6	94.4	1		37.9	26	36.1		2.1	87.4	10.5		7.4	69.8	22.8		
PHF	.563	.923	.375	.930	.729	.581	.658	.660	.607	.904	.672	.868	.600	.533	.841	.614	.932

Counts Unlimited
PO Box 1178
Corona, CA 92878
(951) 268-6268

City of Orange
N/S: Main Street
E/W: Almond Avenue
Weather: Clear

File Name : 01_ORN_Main_Almond AM
Site Code : 00320130
Start Date : 2/27/2020
Page No : 2

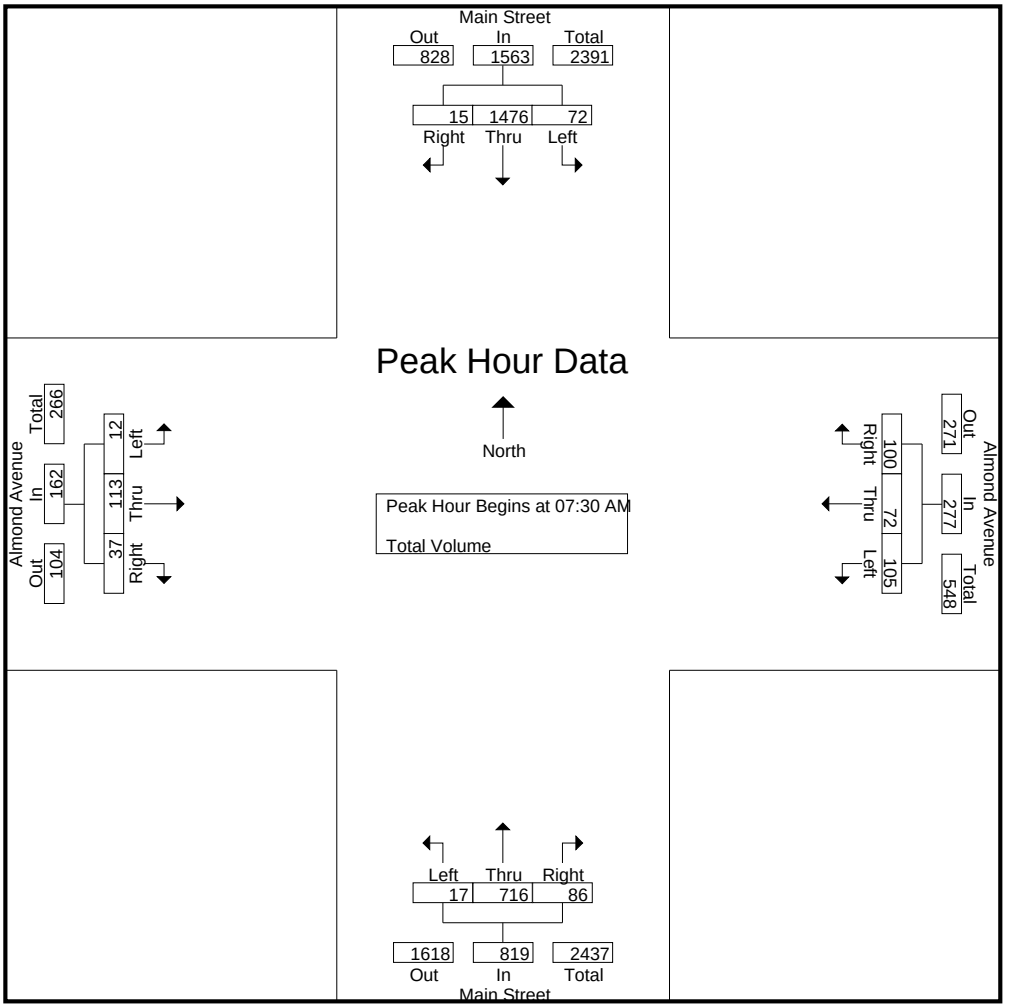

Peak Hour Analysis From 07:00 AM to 08:45 AM - Peak 1 of 1
Peak Hour for Each Approach Begins at:

	07:30 AM				07:30 AM				07:30 AM				07:00 AM			
+0 mins.	20	386	2	408	24	9	16	49	3	170	21	194	3	18	**9**	30
+15 mins.	**32**	342	0	374	27	23	29	79	6	**198**	**32**	**236**	**5**	22	6	33
+30 mins.	10	**400**	**10**	**420**	**36**	**31**	**38**	**105**	**7**	183	15	205	3	35	9	47
+45 mins.	10	348	3	361	18	9	17	44	1	165	18	184	5	**53**	8	**66**
Total Volume	72	1476	15	1563	105	72	100	277	17	716	86	819	16	128	32	176
% App. Total	4.6	94.4	1		37.9	26	36.1		2.1	87.4	10.5		9.1	72.7	18.2	
PHF	.563	.923	.375	.930	.729	.581	.658	.660	.607	.904	.672	.868	.800	.604	.889	.667

Counts Unlimited
PO Box 1178
Corona, CA 92878
(951) 268-6268

City of Orange
N/S: Main Street
E/W: Almond Avenue
Weather: Clear

File Name : 01_ORN_Main_Almond PM
Site Code : 00320130
Start Date : 2/27/2020
Page No : 1

Groups Printed- Total Volume

	Main Street Southbound				Almond Avenue Westbound				Main Street Northbound				Almond Avenue Eastbound				
Start Time	Left	Thru	Right	App. Total	Left	Thru	Right	App. Total	Left	Thru	Right	App. Total	Left	Thru	Right	App. Total	Int. Total
04:00 PM	8	212	5	225	21	20	16	57	8	302	10	320	3	6	7	16	618
04:15 PM	9	195	3	207	12	21	14	47	12	325	15	352	0	17	4	21	627
04:30 PM	12	243	2	257	16	18	18	52	11	356	17	384	4	9	7	20	713
04:45 PM	11	231	11	253	10	21	18	49	9	364	27	400	2	9	5	16	718
Total	40	881	21	942	59	80	66	205	40	1347	69	1456	9	41	23	73	2676
05:00 PM	9	237	9	255	27	27	32	86	13	315	24	352	4	16	8	28	721
05:15 PM	11	262	9	282	16	29	20	65	10	389	30	429	2	15	8	25	801
05:30 PM	14	252	8	274	23	31	24	78	5	372	30	407	8	15	10	33	792
05:45 PM	12	202	8	222	22	20	30	72	7	321	18	346	4	8	6	18	658
Total	46	953	34	1033	88	107	106	301	35	1397	102	1534	18	54	32	104	2972
Grand Total	86	1834	55	1975	147	187	172	506	75	2744	171	2990	27	95	55	177	5648
Apprch %	4.4	92.9	2.8		29.1	37	34		2.5	91.8	5.7		15.3	53.7	31.1		
Total %	1.5	32.5	1	35	2.6	3.3	3	9	1.3	48.6	3	52.9	0.5	1.7	1	3.1	

	Main Street Southbound				Almond Avenue Westbound				Main Street Northbound				Almond Avenue Eastbound				
Start Time	Left	Thru	Right	App. Total	Left	Thru	Right	App. Total	Left	Thru	Right	App. Total	Left	Thru	Right	App. Total	Int. Total
Peak Hour Analysis From 04:00 PM to 05:45 PM - Peak 1 of 1																	
Peak Hour for Entire Intersection Begins at 04:45 PM																	
04:45 PM	11	231	**11**	253	10	21	18	49	9	364	27	400	2	9	5	16	718
05:00 PM	9	237	9	255	**27**	27	**32**	**86**	**13**	315	24	352	4	**16**	8	28	721
05:15 PM	11	**262**	9	**282**	16	29	20	65	10	**389**	**30**	**429**	2	15	8	25	**801**
05:30 PM	**14**	252	8	274	23	**31**	24	78	5	372	30	407	**8**	15	**10**	**33**	792
Total Volume	45	982	37	1064	76	108	94	278	37	1440	111	1588	16	55	31	102	3032
% App. Total	4.2	92.3	3.5		27.3	38.8	33.8		2.3	90.7	7		15.7	53.9	30.4		
PHF	.804	.937	.841	.943	.704	.871	.734	.808	.712	.925	.925	.925	.500	.859	.775	.773	.946

Counts Unlimited
PO Box 1178
Corona, CA 92878
(951) 268-6268

City of Orange
N/S: Main Street
E/W: Almond Avenue
Weather: Clear

File Name : 01_ORN_Main_Almond PM
Site Code : 00320130
Start Date : 2/27/2020
Page No : 2

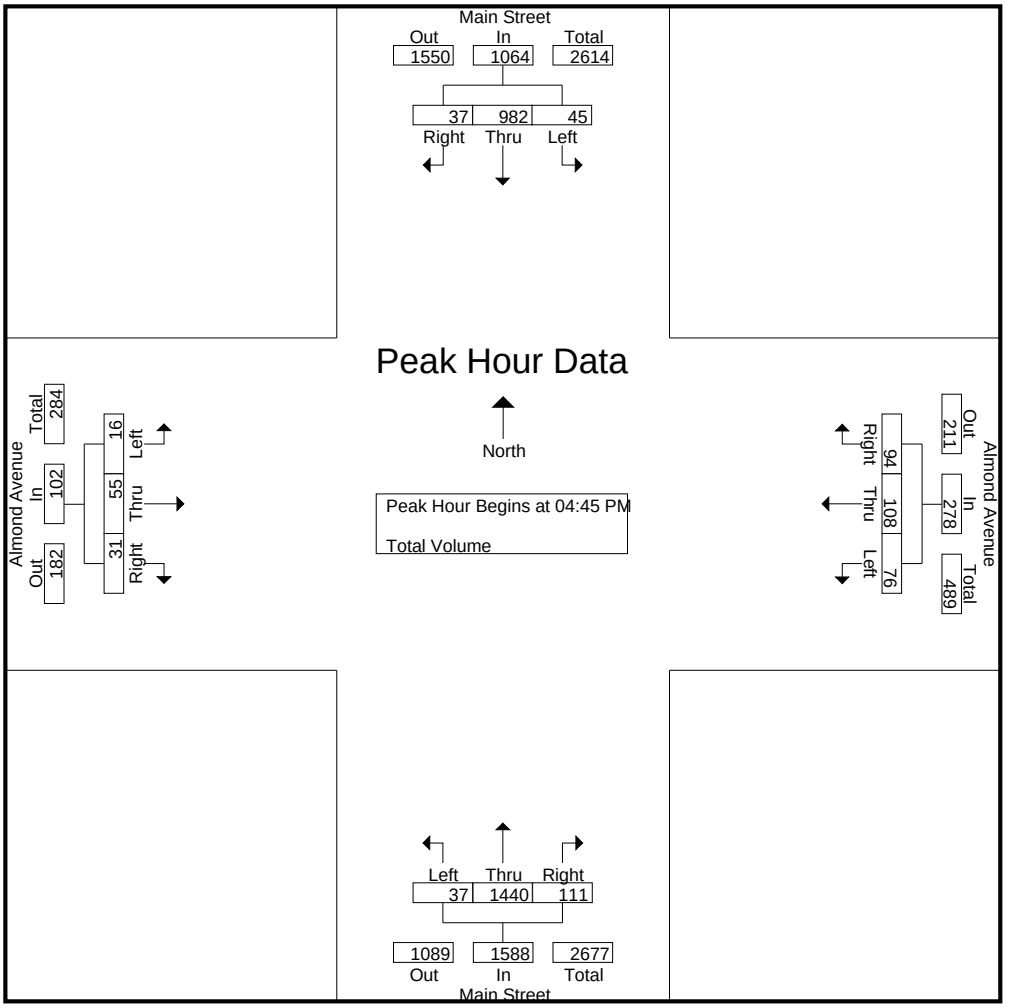

Peak Hour Analysis From 04:00 PM to 05:45 PM - Peak 1 of 1
Peak Hour for Each Approach Begins at:

	04:45 PM				05:00 PM				04:45 PM				05:00 PM			
+0 mins.	11	231	**11**	253	**27**	27	**32**	**86**	9	364	27	400	4	**16**	8	28
+15 mins.	9	237	9	255	16	29	20	65	**13**	315	24	352	2	15	8	25
+30 mins.	11	**262**	9	**282**	23	**31**	24	78	10	**389**	**30**	**429**	**8**	15	**10**	**33**
+45 mins.	**14**	252	8	274	22	20	30	72	5	372	30	407	4	8	6	18
Total Volume	45	982	37	1064	88	107	106	301	37	1440	111	1588	18	54	32	104
% App. Total	4.2	92.3	3.5		29.2	35.5	35.2		2.3	90.7	7		17.3	51.9	30.8	
PHF	.804	.937	.841	.943	.815	.863	.828	.875	.712	.925	.925	.925	.563	.844	.800	.788

Counts Unlimited
PO Box 1178
Corona, CA 92878
(951) 268-6268

City of Orange
N/S: Main Street
E/W: Palmyra Avenue
Weather: Clear

File Name : 02_ORN_Main_Palmyra AM
Site Code : 00320130
Start Date : 2/27/2020
Page No : 1

Groups Printed- Total Volume

	Main Street Southbound				Palmyra Avenue Westbound				Main Street Northbound				Palmyra Avenue Eastbound				
Start Time	Left	Thru	Right	App. Total	Left	Thru	Right	App. Total	Left	Thru	Right	App. Total	Left	Thru	Right	App. Total	Int. Total
07:00 AM	2	248	6	256	3	1	2	6	10	157	3	170	16	1	16	33	465
07:15 AM	2	295	10	307	3	1	2	6	19	155	2	176	13	6	30	49	538
07:30 AM	3	356	14	373	1	6	5	12	18	195	4	217	20	8	23	51	653
07:45 AM	5	313	13	331	3	11	8	22	20	220	7	247	33	8	31	72	672
Total	12	1212	43	1267	10	19	17	46	67	727	16	810	82	23	100	205	2328
08:00 AM	4	374	26	404	7	5	2	14	24	190	6	220	18	10	20	48	686
08:15 AM	4	347	9	360	6	2	5	13	20	152	6	178	24	5	18	47	598
08:30 AM	2	357	1	360	6	6	3	15	20	129	4	153	16	2	18	36	564
08:45 AM	5	234	9	248	8	2	4	14	22	145	4	171	17	6	12	35	468
Total	15	1312	45	1372	27	15	14	56	86	616	20	722	75	23	68	166	2316
Grand Total	27	2524	88	2639	37	34	31	102	153	1343	36	1532	157	46	168	371	4644
Apprch %	1	95.6	3.3		36.3	33.3	30.4		10	87.7	2.3		42.3	12.4	45.3		
Total %	0.6	54.3	1.9	56.8	0.8	0.7	0.7	2.2	3.3	28.9	0.8	33	3.4	1	3.6	8	

	Main Street Southbound				Palmyra Avenue Westbound				Main Street Northbound				Palmyra Avenue Eastbound				
Start Time	Left	Thru	Right	App. Total	Left	Thru	Right	App. Total	Left	Thru	Right	App. Total	Left	Thru	Right	App. Total	Int. Total
Peak Hour Analysis From 07:00 AM to 08:45 AM - Peak 1 of 1																	
Peak Hour for Entire Intersection Begins at 07:30 AM																	
07:30 AM	3	356	14	373	1	6	5	12	18	195	4	217	20	8	23	51	653
07:45 AM	**5**	313	13	331	3	**11**	**8**	**22**	20	**220**	**7**	**247**	**33**	8	**31**	**72**	672
08:00 AM	4	**374**	**26**	**404**	**7**	5	2	14	**24**	190	6	220	18	**10**	20	48	**686**
08:15 AM	4	347	9	360	6	2	5	13	20	152	6	178	24	5	18	47	598
Total Volume	16	1390	62	1468	17	24	20	61	82	757	23	862	95	31	92	218	2609
% App. Total	1.1	94.7	4.2		27.9	39.3	32.8		9.5	87.8	2.7		43.6	14.2	42.2		
PHF	.800	.929	.596	.908	.607	.545	.625	.693	.854	.860	.821	.872	.720	.775	.742	.757	.951

Counts Unlimited
PO Box 1178
Corona, CA 92878
(951) 268-6268

City of Orange
N/S: Main Street
E/W: Palmyra Avenue
Weather: Clear

File Name : 02_ORN_Main_Palmyra AM
Site Code : 00320130
Start Date : 2/27/2020
Page No : 2

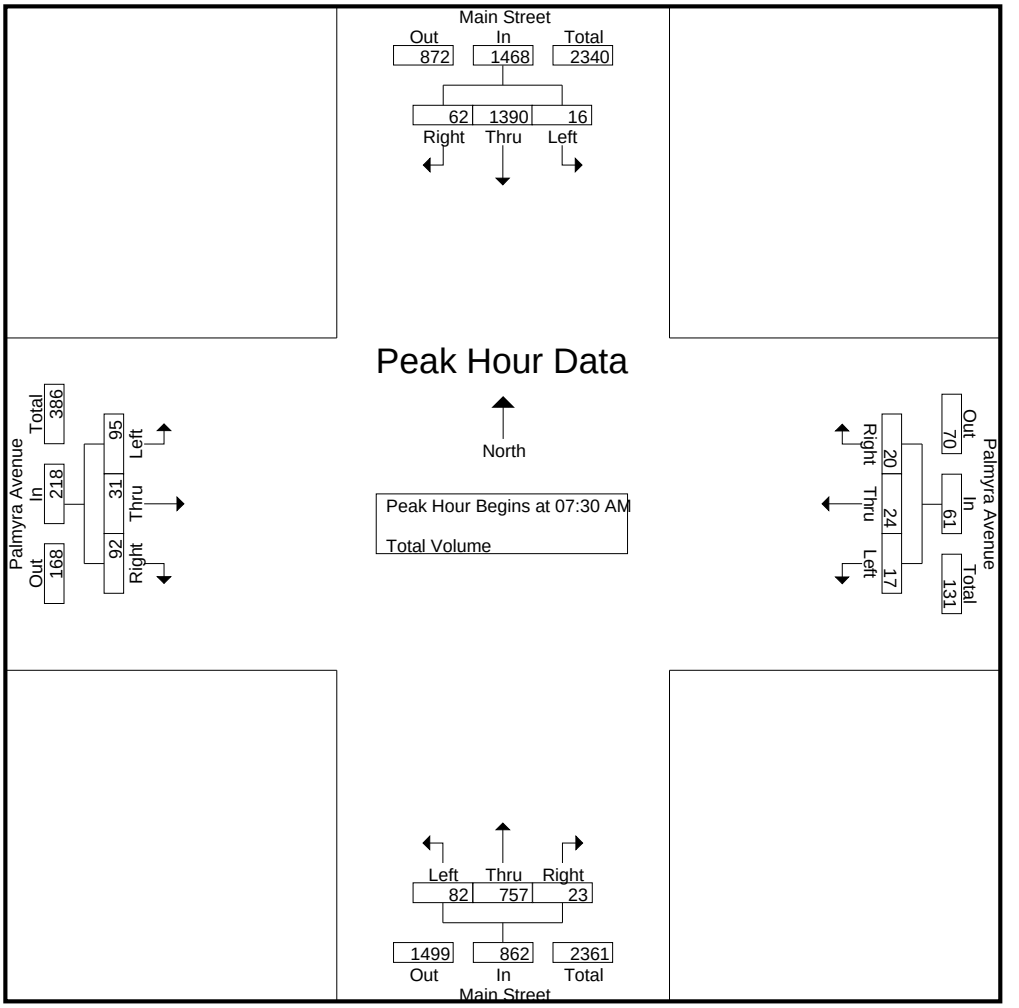

Peak Hour Analysis From 07:00 AM to 08:45 AM - Peak 1 of 1
Peak Hour for Each Approach Begins at:

	07:30 AM				07:45 AM				07:30 AM				07:15 AM			
+0 mins.	3	356	14	373	3	**11**	**8**	**22**	18	195	4	217	13	6	30	49
+15 mins.	**5**	313	13	331	**7**	5	2	14	20	**220**	**7**	**247**	20	8	23	51
+30 mins.	4	**374**	**26**	**404**	6	2	5	13	**24**	190	6	220	**33**	8	**31**	**72**
+45 mins.	4	347	9	360	6	6	3	15	20	152	6	178	18	**10**	20	48
Total Volume	16	1390	62	1468	22	24	18	64	82	757	23	862	84	32	104	220
% App. Total	1.1	94.7	4.2		34.4	37.5	28.1		9.5	87.8	2.7		38.2	14.5	47.3	
PHF	.800	.929	.596	.908	.786	.545	.563	.727	.854	.860	.821	.872	.636	.800	.839	.764

Counts Unlimited
PO Box 1178
Corona, CA 92878
(951) 268-6268

City of Orange
N/S: Main Street
E/W: Palmyra Avenue
Weather: Clear

File Name : 02_ORN_Main_Palmyra PM
Site Code : 00320130
Start Date : 2/27/2020
Page No : 1

Groups Printed- Total Volume

	Main Street Southbound				Palmyra Avenue Westbound				Main Street Northbound				Palmyra Avenue Eastbound				
Start Time	Left	Thru	Right	App. Total	Left	Thru	Right	App. Total	Left	Thru	Right	App. Total	Left	Thru	Right	App. Total	Int. Total
04:00 PM	4	219	20	243	4	6	8	18	16	290	6	312	28	3	22	53	626
04:15 PM	3	184	22	209	7	2	5	14	19	334	11	364	20	3	21	44	631
04:30 PM	3	255	13	271	6	7	5	18	14	360	9	383	29	3	19	51	723
04:45 PM	5	215	14	234	9	7	5	21	15	360	7	382	21	5	24	50	687
Total	15	873	69	957	26	22	23	71	64	1344	33	1441	98	14	86	198	2667
05:00 PM	4	263	17	284	10	15	8	33	20	336	12	368	29	4	20	53	738
05:15 PM	6	261	18	285	8	10	9	27	13	395	4	412	22	3	17	42	766
05:30 PM	6	242	17	265	5	5	4	14	15	366	5	386	30	3	11	44	709
05:45 PM	7	226	13	246	8	5	2	15	20	292	1	313	33	4	16	53	627
Total	23	992	65	1080	31	35	23	89	68	1389	22	1479	114	14	64	192	2840
Grand Total	38	1865	134	2037	57	57	46	160	132	2733	55	2920	212	28	150	390	5507
Apprch %	1.9	91.6	6.6		35.6	35.6	28.8		4.5	93.6	1.9		54.4	7.2	38.5		
Total %	0.7	33.9	2.4	37	1	1	0.8	2.9	2.4	49.6	1	53	3.8	0.5	2.7	7.1	

	Main Street Southbound				Palmyra Avenue Westbound				Main Street Northbound				Palmyra Avenue Eastbound				
Start Time	Left	Thru	Right	App. Total	Left	Thru	Right	App. Total	Left	Thru	Right	App. Total	Left	Thru	Right	App. Total	Int. Total
Peak Hour Analysis From 04:00 PM to 05:45 PM - Peak 1 of 1																	
Peak Hour for Entire Intersection Begins at 04:30 PM																	
04:30 PM	3	255	13	271	6	7	5	18	14	360	9	383	**29**	3	19	51	723
04:45 PM	5	215	14	234	9	7	5	21	15	360	7	382	21	**5**	**24**	50	687
05:00 PM	4	**263**	17	284	**10**	**15**	8	**33**	**20**	336	**12**	368	29	4	20	**53**	738
05:15 PM	**6**	261	**18**	**285**	8	10	**9**	27	13	**395**	4	**412**	22	3	17	42	**766**
Total Volume	18	994	62	1074	33	39	27	99	62	1451	32	1545	101	15	80	196	2914
% App. Total	1.7	92.6	5.8		33.3	39.4	27.3		4	93.9	2.1		51.5	7.7	40.8		
PHF	.750	.945	.861	.942	.825	.650	.750	.750	.775	.918	.667	.938	.871	.750	.833	.925	.951

Counts Unlimited
PO Box 1178
Corona, CA 92878
(951) 268-6268

City of Orange
N/S: Main Street
E/W: Palmyra Avenue
Weather: Clear

File Name : 02_ORN_Main_Palmyra PM
Site Code : 00320130
Start Date : 2/27/2020
Page No : 2

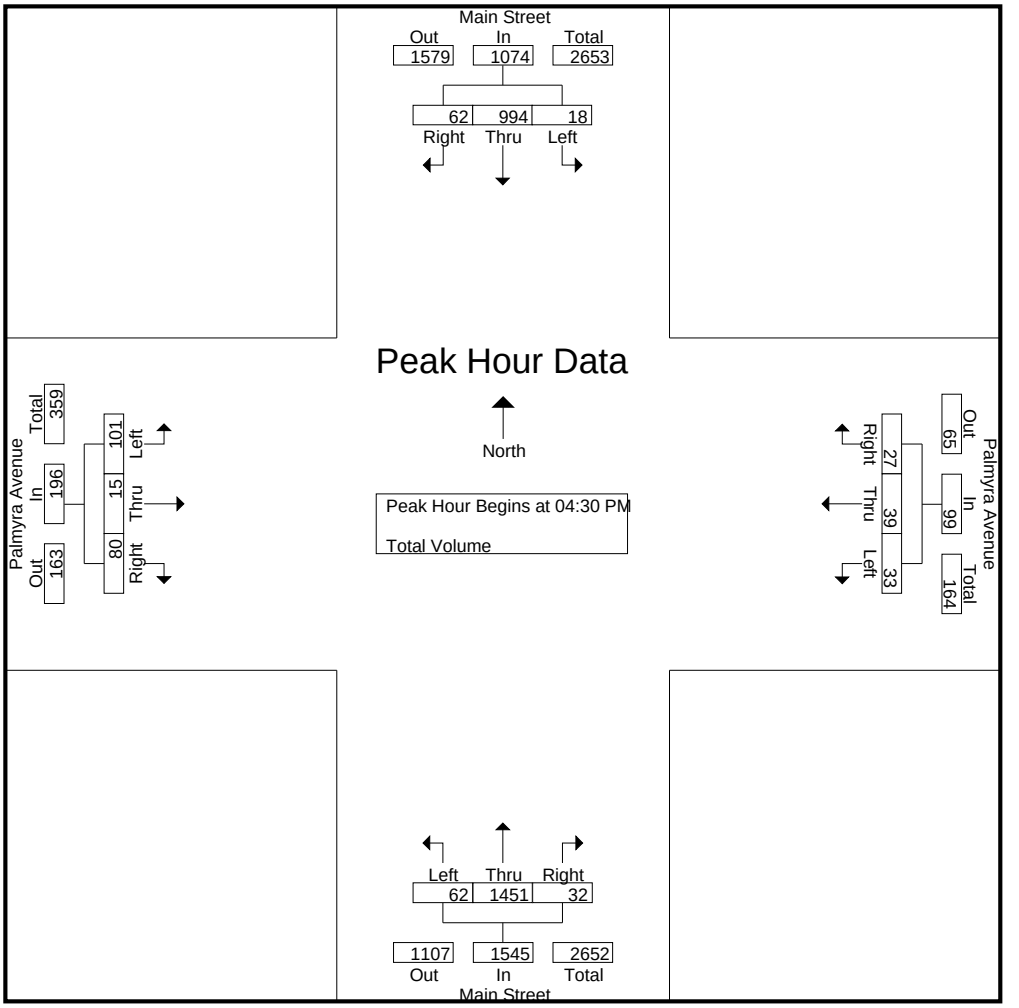

Peak Hour Analysis From 04:00 PM to 05:45 PM - Peak 1 of 1
Peak Hour for Each Approach Begins at:

	05:00 PM				04:30 PM				04:45 PM				04:00 PM			
+0 mins.	4	**263**	17	284	6	7	5	18	15	360	7	382	28	3	22	**53**
+15 mins.	6	261	**18**	**285**	9	7	5	21	**20**	336	**12**	368	20	3	21	44
+30 mins.	6	242	17	265	**10**	**15**	8	**33**	13	**395**	4	**412**	**29**	3	19	51
+45 mins.	**7**	226	13	246	8	10	**9**	27	15	366	5	386	21	**5**	**24**	50
Total Volume	23	992	65	1080	33	39	27	99	63	1457	28	1548	98	14	86	198
% App. Total	2.1	91.9	6		33.3	39.4	27.3		4.1	94.1	1.8		49.5	7.1	43.4	
PHF	.821	.943	.903	.947	.825	.650	.750	.750	.788	.922	.583	.939	.845	.700	.896	.934

Counts Unlimited
PO Box 1178
Corona, CA 92878
(951) 268-6268

City of Orange
N/S: Main Street
E/W: Columbia Place
Weather: Clear

File Name : 03_ORN_Main_Columbia Pl AM
Site Code : 00320130
Start Date : 2/27/2020
Page No : 1

Groups Printed- Total Volume

	Main Street Southbound				Columbia Place Westbound				Main Street Northbound				Staples Driveway Eastbound				
Start Time	Left	Thru	Right	App. Total	Left	Thru	Right	App. Total	Left	Thru	Right	App. Total	Left	Thru	Right	App. Total	Int. Total
07:00 AM	16	254	3	273	0	1	2	3	29	160	2	191	0	0	2	2	469
07:15 AM	9	323	5	337	0	0	2	2	37	174	3	214	1	0	5	6	559
07:30 AM	23	364	3	390	0	0	1	1	37	198	8	243	0	0	24	24	658
07:45 AM	28	338	4	370	0	0	2	2	53	242	8	303	0	0	20	20	695
Total	76	1279	15	1370	0	1	7	8	156	774	21	951	1	0	51	52	2381
08:00 AM	26	374	6	406	0	0	2	2	47	195	8	250	0	0	9	9	667
08:15 AM	23	348	3	374	0	0	5	5	34	172	5	211	0	0	8	8	598
08:30 AM	18	372	3	393	1	0	3	4	33	147	0	180	2	0	6	8	585
08:45 AM	14	242	5	261	0	0	4	4	27	166	3	196	0	0	7	7	468
Total	81	1336	17	1434	1	0	14	15	141	680	16	837	2	0	30	32	2318
Grand Total	157	2615	32	2804	1	1	21	23	297	1454	37	1788	3	0	81	84	4699
Apprch %	5.6	93.3	1.1		4.3	4.3	91.3		16.6	81.3	2.1		3.6	0	96.4		
Total %	3.3	55.7	0.7	59.7	0	0	0.4	0.5	6.3	30.9	0.8	38.1	0.1	0	1.7	1.8	

	Main Street Southbound				Columbia Place Westbound				Main Street Northbound				Staples Driveway Eastbound				
Start Time	Left	Thru	Right	App. Total	Left	Thru	Right	App. Total	Left	Thru	Right	App. Total	Left	Thru	Right	App. Total	Int. Total
Peak Hour Analysis From 07:00 AM to 08:45 AM - Peak 1 of 1																	
Peak Hour for Entire Intersection Begins at 07:30 AM																	
07:30 AM	23	364	3	390	0	0	1	1	37	198	**8**	243	0	0	**24**	**24**	658
07:45 AM	**28**	338	4	370	0	0	2	2	**53**	**242**	8	**303**	0	0	20	20	**695**
08:00 AM	26	**374**	**6**	**406**	0	0	2	2	47	195	8	250	0	0	9	9	667
08:15 AM	23	348	3	374	0	0	**5**	**5**	34	172	5	211	0	0	8	8	598
Total Volume	100	1424	16	1540	0	0	10	10	171	807	29	1007	0	0	61	61	2618
% App. Total	6.5	92.5	1		0	0	100		17	80.1	2.9		0	0	100		
PHF	.893	.952	.667	.948	.000	.000	.500	.500	.807	.834	.906	.831	.000	.000	.635	.635	.942

Counts Unlimited
PO Box 1178
Corona, CA 92878
(951) 268-6268

City of Orange
N/S: Main Street
E/W: Columbia Place
Weather: Clear

File Name : 03_ORN_Main_Columbia Pl AM
Site Code : 00320130
Start Date : 2/27/2020
Page No : 2

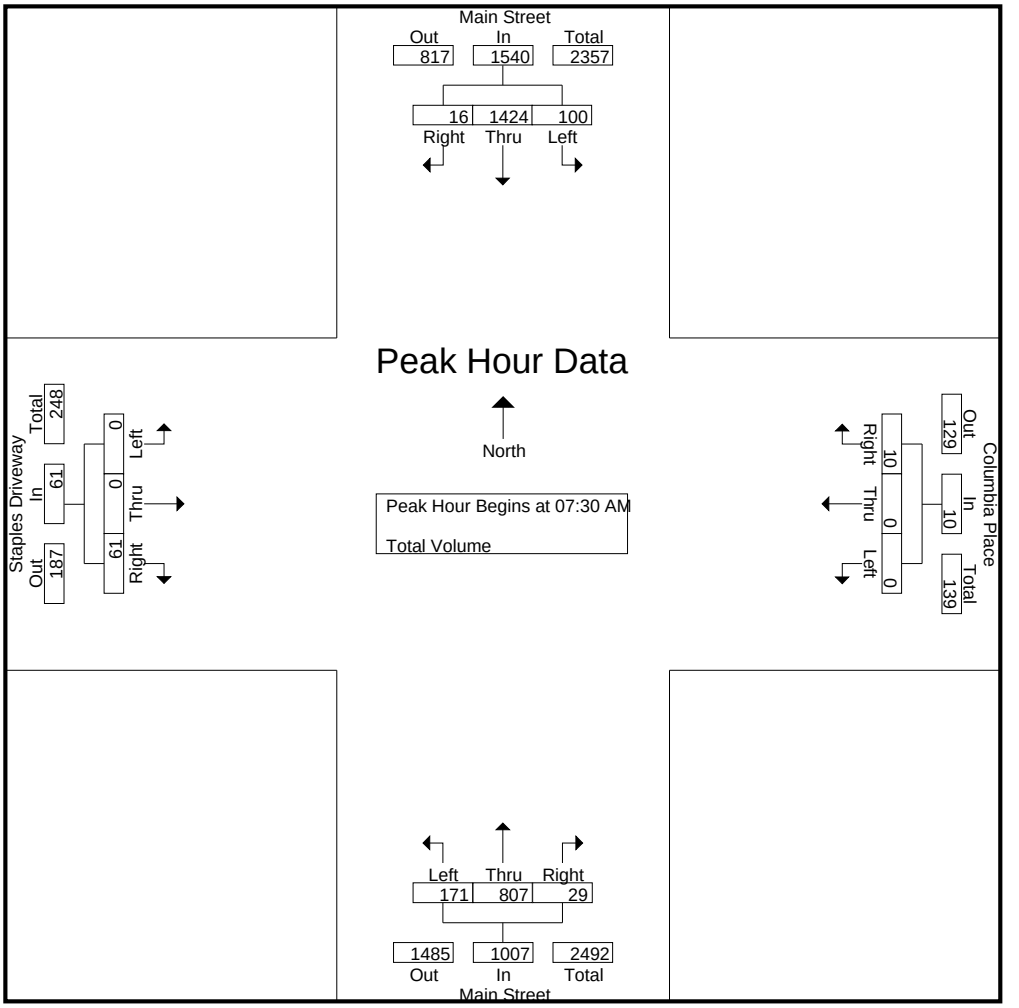

Peak Hour Analysis From 07:00 AM to 08:45 AM - Peak 1 of 1
Peak Hour for Each Approach Begins at:

	07:45 AM				08:00 AM				07:15 AM				07:30 AM			
+0 mins.	**28**	338	4	370	0	0	2	2	37	174	3	214	0	0	**24**	**24**
+15 mins.	26	**374**	**6**	**406**	0	0	**5**	**5**	37	198	**8**	243	0	0	20	20
+30 mins.	23	348	3	374	**1**	0	3	4	**53**	**242**	8	**303**	0	0	9	9
+45 mins.	18	372	3	393	0	0	4	4	47	195	8	250	0	0	8	8
Total Volume	95	1432	16	1543	1	0	14	15	174	809	27	1010	0	0	61	61
% App. Total	6.2	92.8	1		6.7	0	93.3		17.2	80.1	2.7		0	0	100	
PHF	.848	.957	.667	.950	.250	.000	.700	.750	.821	.836	.844	.833	.000	.000	.635	.635

Counts Unlimited
PO Box 1178
Corona, CA 92878
(951) 268-6268

City of Orange
N/S: Main Street
E/W: Columbia Place
Weather: Clear

File Name : 03_ORN_Main_Columbia Pl PM
Site Code : 00320130
Start Date : 2/27/2020
Page No : 1

Groups Printed- Total Volume

	Main Street Southbound				Columbia Place Westbound				Main Street Northbound				Staples Driveway Eastbound				
Start Time	Left	Thru	Right	App. Total	Left	Thru	Right	App. Total	Left	Thru	Right	App. Total	Left	Thru	Right	App. Total	Int. Total
04:00 PM	2	252	5	259	0	0	5	5	8	311	5	324	0	0	19	19	607
04:15 PM	0	214	3	217	0	0	5	5	6	361	5	372	0	0	18	18	612
04:30 PM	4	274	5	283	0	0	1	1	6	360	2	368	1	0	31	32	684
04:45 PM	3	245	4	252	0	1	2	3	5	355	4	364	1	0	23	24	643
Total	9	985	17	1011	0	1	13	14	25	1387	16	1428	2	0	91	93	2546
05:00 PM	4	285	4	293	0	0	2	2	6	337	5	348	3	0	29	32	675
05:15 PM	2	280	3	285	0	0	2	2	7	388	2	397	0	0	21	21	705
05:30 PM	3	251	5	259	0	0	1	1	11	362	5	378	0	0	20	20	658
05:45 PM	4	254	4	262	0	0	1	1	10	302	3	315	2	0	11	13	591
Total	13	1070	16	1099	0	0	6	6	34	1389	15	1438	5	0	81	86	2629
Grand Total	22	2055	33	2110	0	1	19	20	59	2776	31	2866	7	0	172	179	5175
Apprch %	1	97.4	1.6		0	5	95		2.1	96.9	1.1		3.9	0	96.1		
Total %	0.4	39.7	0.6	40.8	0	0	0.4	0.4	1.1	53.6	0.6	55.4	0.1	0	3.3	3.5	

	Main Street Southbound				Columbia Place Westbound				Main Street Northbound				Staples Driveway Eastbound				
Start Time	Left	Thru	Right	App. Total	Left	Thru	Right	App. Total	Left	Thru	Right	App. Total	Left	Thru	Right	App. Total	Int. Total
Peak Hour Analysis From 04:00 PM to 05:45 PM - Peak 1 of 1																	
Peak Hour for Entire Intersection Begins at 04:30 PM																	
04:30 PM	**4**	274	**5**	283	0	0	1	1	6	360	2	368	1	0	**31**	**32**	684
04:45 PM	3	245	4	252	0	**1**	**2**	**3**	5	355	4	364	1	0	23	24	643
05:00 PM	4	**285**	4	**293**	0	0	2	2	6	337	**5**	348	**3**	0	29	32	675
05:15 PM	2	280	3	285	0	0	2	2	**7**	**388**	2	**397**	0	0	21	21	**705**
Total Volume	13	1084	16	1113	0	1	7	8	24	1440	13	1477	5	0	104	109	2707
% App. Total	1.2	97.4	1.4		0	12.5	87.5		1.6	97.5	0.9		4.6	0	95.4		
PHF	.813	.951	.800	.950	.000	.250	.875	.667	.857	.928	.650	.930	.417	.000	.839	.852	.960

Counts Unlimited
PO Box 1178
Corona, CA 92878
(951) 268-6268

City of Orange
N/S: Main Street
E/W: Columbia Place
Weather: Clear

File Name : 03_ORN_Main_Columbia Pl PM
Site Code : 00320130
Start Date : 2/27/2020
Page No : 2

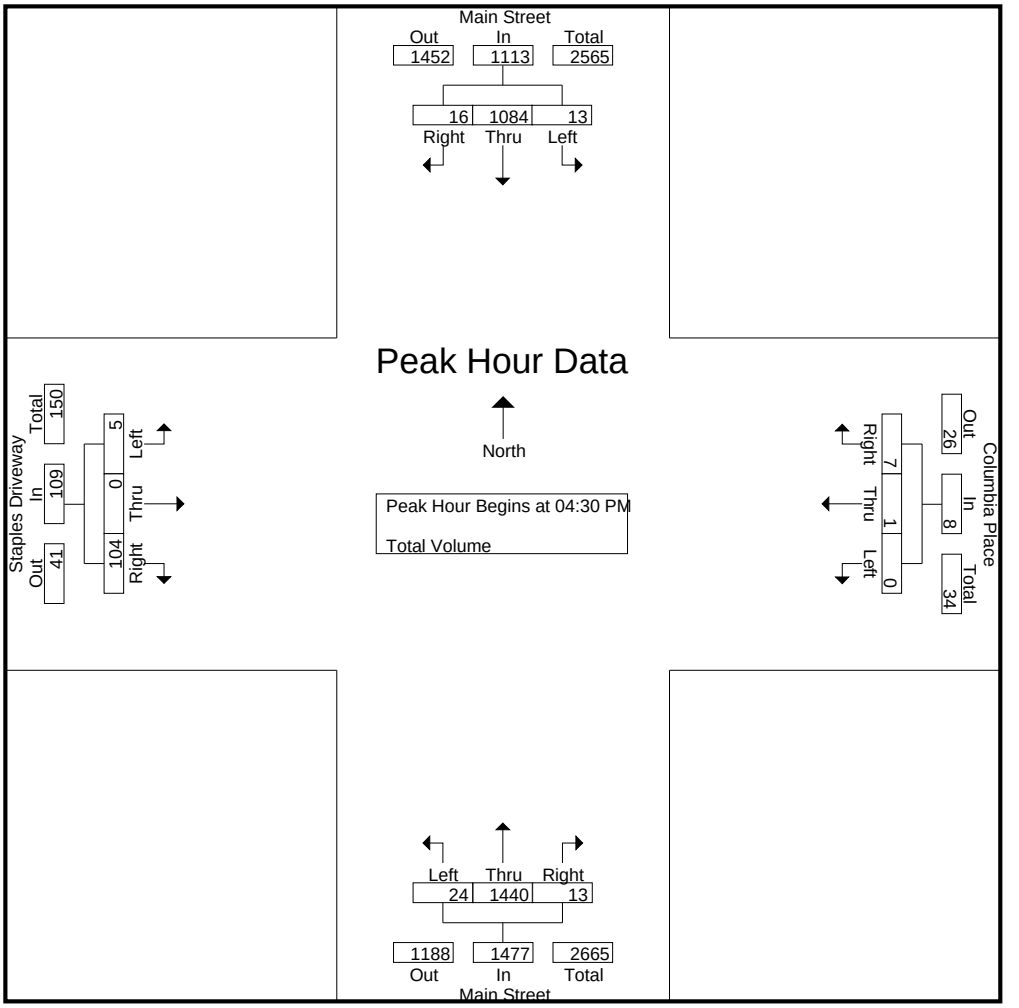

Peak Hour Analysis From 04:00 PM to 05:45 PM - Peak 1 of 1
Peak Hour for Each Approach Begins at:

	04:30 PM				04:00 PM				04:45 PM				04:30 PM			
+0 mins.	**4**	274	**5**	283	0	0	**5**	**5**	5	355	4	364	1	0	**31**	**32**
+15 mins.	3	245	4	252	0	0	5	5	6	337	**5**	348	1	0	23	24
+30 mins.	4	**285**	4	**293**	0	0	1	1	7	**388**	2	**397**	**3**	0	29	32
+45 mins.	2	280	3	285	0	**1**	2	3	**11**	362	5	378	0	0	21	21
Total Volume	13	1084	16	1113	0	1	13	14	29	1442	16	1487	5	0	104	109
% App. Total	1.2	97.4	1.4		0	7.1	92.9		2	97	1.1		4.6	0	95.4	
PHF	.813	.951	.800	.950	.000	.250	.650	.700	.659	.929	.800	.936	.417	.000	.839	.852

Counts Unlimited
PO Box 1178
Corona, CA 92878
(951) 268-6268

City of Orange
N/S: Main Street
E/W: Culver Avenue/Stewart Drive
Weather: Clear

File Name : 04_ORN_Main_Stewart AM
Site Code : 00320130
Start Date : 2/27/2020
Page No : 1

Groups Printed- Total Volume

	Main Street Southbound				Stewart Drive Westbound				Main Street Northbound				Culver Avenue Eastbound				
Start Time	Left	Thru	Right	App. Total	Left	Thru	Right	App. Total	Left	Thru	Right	App. Total	Left	Thru	Right	App. Total	Int. Total
07:00 AM	8	229	6	243	12	0	9	21	5	166	8	179	10	1	22	33	476
07:15 AM	11	310	5	326	7	2	4	13	8	205	10	223	9	0	35	44	606
07:30 AM	15	337	4	356	31	0	8	39	14	222	19	255	12	1	39	52	702
07:45 AM	22	316	8	346	25	1	21	47	17	268	16	301	16	3	31	50	744
Total	56	1192	23	1271	75	3	42	120	44	861	53	958	47	5	127	179	2528
08:00 AM	23	334	11	368	18	1	8	27	24	227	23	274	14	4	21	39	708
08:15 AM	34	294	18	346	15	1	8	24	8	194	24	226	9	2	24	35	631
08:30 AM	31	325	9	365	30	3	10	43	18	163	35	216	5	5	15	25	649
08:45 AM	22	208	7	237	22	1	10	33	21	181	28	230	10	4	16	30	530
Total	110	1161	45	1316	85	6	36	127	71	765	110	946	38	15	76	129	2518
Grand Total	166	2353	68	2587	160	9	78	247	115	1626	163	1904	85	20	203	308	5046
Apprch %	6.4	91	2.6		64.8	3.6	31.6		6	85.4	8.6		27.6	6.5	65.9		
Total %	3.3	46.6	1.3	51.3	3.2	0.2	1.5	4.9	2.3	32.2	3.2	37.7	1.7	0.4	4	6.1	

	Main Street Southbound				Stewart Drive Westbound				Main Street Northbound				Culver Avenue Eastbound				
Start Time	Left	Thru	Right	App. Total	Left	Thru	Right	App. Total	Left	Thru	Right	App. Total	Left	Thru	Right	App. Total	Int. Total
Peak Hour Analysis From 07:00 AM to 08:45 AM - Peak 1 of 1																	
Peak Hour for Entire Intersection Begins at 07:30 AM																	
07:30 AM	15	**337**	4	356	**31**	0	8	39	14	222	19	255	12	1	**39**	**52**	702
07:45 AM	22	316	8	346	25	**1**	**21**	**47**	17	**268**	16	**301**	**16**	3	31	50	**744**
08:00 AM	23	334	11	**368**	18	1	8	27	**24**	227	23	274	14	**4**	21	39	708
08:15 AM	**34**	294	**18**	346	15	1	8	24	8	194	**24**	226	9	2	24	35	631
Total Volume	94	1281	41	1416	89	3	45	137	63	911	82	1056	51	10	115	176	2785
% App. Total	6.6	90.5	2.9		65	2.2	32.8		6	86.3	7.8		29	5.7	65.3		
PHF	.691	.950	.569	.962	.718	.750	.536	.729	.656	.850	.854	.877	.797	.625	.737	.846	.936

Counts Unlimited
PO Box 1178
Corona, CA 92878
(951) 268-6268

City of Orange
N/S: Main Street
E/W: Culver Avenue/Stewart Drive
Weather: Clear

File Name : 04_ORN_Main_Stewart AM
Site Code : 00320130
Start Date : 2/27/2020
Page No : 2

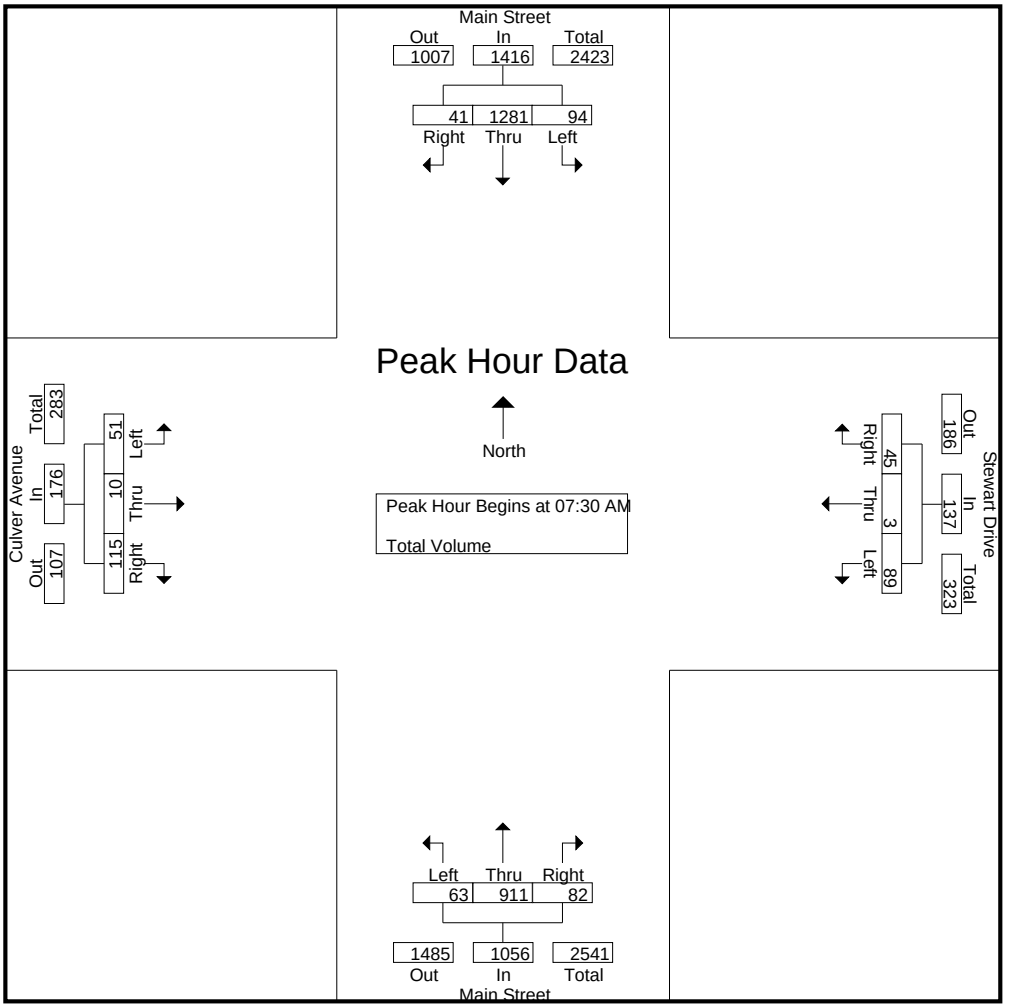

Peak Hour Analysis From 07:00 AM to 08:45 AM - Peak 1 of 1
Peak Hour for Each Approach Begins at:

	07:45 AM				07:45 AM				07:30 AM				07:15 AM			
+0 mins.	22	316	8	346	25	1	**21**	**47**	14	222	19	255	9	0	35	44
+15 mins.	23	**334**	11	**368**	18	1	8	27	17	**268**	16	**301**	12	1	**39**	**52**
+30 mins.	**34**	294	**18**	346	15	1	8	24	**24**	227	23	274	**16**	3	31	50
+45 mins.	31	325	9	365	**30**	**3**	10	43	8	194	**24**	226	14	**4**	21	39
Total Volume	110	1269	46	1425	88	6	47	141	63	911	82	1056	51	8	126	185
% App. Total	7.7	89.1	3.2		62.4	4.3	33.3		6	86.3	7.8		27.6	4.3	68.1	
PHF	.809	.950	.639	.968	.733	.500	.560	.750	.656	.850	.854	.877	.797	.500	.808	.889

Counts Unlimited
PO Box 1178
Corona, CA 92878
(951) 268-6268

City of Orange
N/S: Main Street
E/W: Culver Avenue/Stewart Drive
Weather: Clear

File Name : 04_ORN_Main_Stewart PM
Site Code : 00320130
Start Date : 2/27/2020
Page No : 1

Groups Printed- Total Volume

	Main Street Southbound				Stewart Drive Westbound				Main Street Northbound				Culver Avenue Eastbound				
Start Time	Left	Thru	Right	App. Total	Left	Thru	Right	App. Total	Left	Thru	Right	App. Total	Left	Thru	Right	App. Total	Int. Total
04:00 PM	17	224	20	261	47	10	34	91	25	284	22	331	15	3	14	32	715
04:15 PM	7	221	7	235	27	10	23	60	28	303	35	366	32	7	12	51	712
04:30 PM	16	236	20	272	47	6	31	84	20	319	21	360	11	2	18	31	747
04:45 PM	13	204	18	235	70	7	24	101	28	299	26	353	29	6	18	53	742
Total	53	885	65	1003	191	33	112	336	101	1205	104	1410	87	18	62	167	2916
05:00 PM	14	263	14	291	52	9	19	80	41	315	13	369	18	2	28	48	788
05:15 PM	9	245	22	276	44	13	24	81	17	346	16	379	26	3	11	40	776
05:30 PM	10	244	10	264	43	6	14	63	19	356	19	394	21	0	22	43	764
05:45 PM	6	217	11	234	42	5	14	61	29	284	20	333	11	1	23	35	663
Total	39	969	57	1065	181	33	71	285	106	1301	68	1475	76	6	84	166	2991
Grand Total	92	1854	122	2068	372	66	183	621	207	2506	172	2885	163	24	146	333	5907
Apprch %	4.4	89.7	5.9		59.9	10.6	29.5		7.2	86.9	6		48.9	7.2	43.8		
Total %	1.6	31.4	2.1	35	6.3	1.1	3.1	10.5	3.5	42.4	2.9	48.8	2.8	0.4	2.5	5.6	

	Main Street Southbound				Stewart Drive Westbound				Main Street Northbound				Culver Avenue Eastbound				
Start Time	Left	Thru	Right	App. Total	Left	Thru	Right	App. Total	Left	Thru	Right	App. Total	Left	Thru	Right	App. Total	Int. Total
Peak Hour Analysis From 04:00 PM to 05:45 PM - Peak 1 of 1																	
Peak Hour for Entire Intersection Begins at 04:45 PM																	
04:45 PM	13	204	18	235	**70**	7	**24**	**101**	28	299	**26**	353	**29**	**6**	18	**53**	742
05:00 PM	**14**	**263**	14	**291**	52	9	19	80	**41**	315	13	369	18	2	**28**	48	**788**
05:15 PM	9	245	**22**	276	44	**13**	24	81	17	346	16	379	26	3	11	40	776
05:30 PM	10	244	10	264	43	6	14	63	19	**356**	19	**394**	21	0	22	43	764
Total Volume	46	956	64	1066	209	35	81	325	105	1316	74	1495	94	11	79	184	3070
% App. Total	4.3	89.7	6		64.3	10.8	24.9		7	88	4.9		51.1	6	42.9		
PHF	.821	.909	.727	.916	.746	.673	.844	.804	.640	.924	.712	.949	.810	.458	.705	.868	.974

Counts Unlimited
PO Box 1178
Corona, CA 92878
(951) 268-6268

City of Orange
N/S: Main Street
E/W: Culver Avenue/Stewart Drive
Weather: Clear

File Name : 04_ORN_Main_Stewart PM
Site Code : 00320130
Start Date : 2/27/2020
Page No : 2

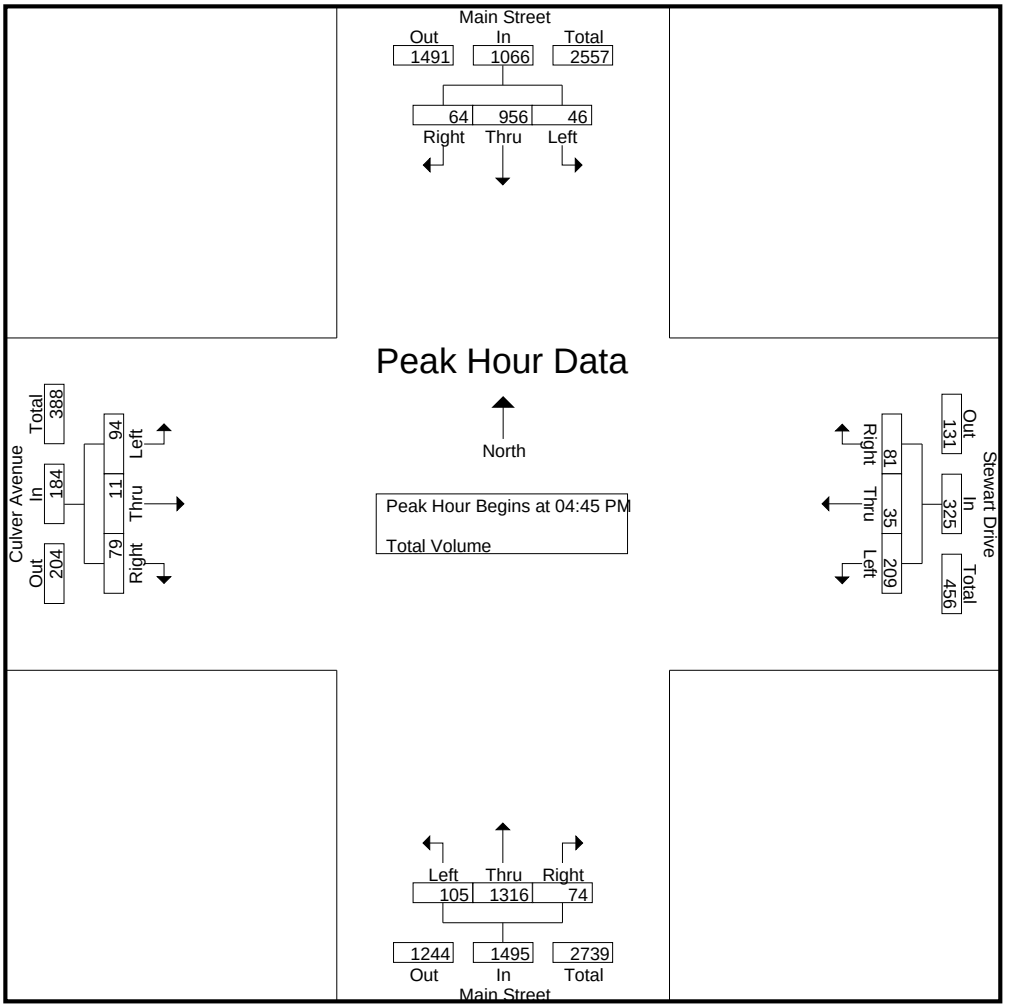

Peak Hour Analysis From 04:00 PM to 05:45 PM - Peak 1 of 1
Peak Hour for Each Approach Begins at:

	04:30 PM				04:30 PM				04:45 PM				04:45 PM			
+0 mins.	**16**	236	20	272	47	6	**31**	84	28	299	**26**	353	**29**	**6**	18	**53**
+15 mins.	13	204	18	235	**70**	7	24	**101**	**41**	315	13	369	18	2	**28**	48
+30 mins.	14	**263**	14	**291**	52	9	19	80	17	346	16	379	26	3	11	40
+45 mins.	9	245	**22**	276	44	**13**	24	81	19	**356**	19	**394**	21	0	22	43
Total Volume	52	948	74	1074	213	35	98	346	105	1316	74	1495	94	11	79	184
% App. Total	4.8	88.3	6.9		61.6	10.1	28.3		7	88	4.9		51.1	6	42.9	
PHF	.813	.901	.841	.923	.761	.673	.790	.856	.640	.924	.712	.949	.810	.458	.705	.868

Counts Unlimited
PO Box 1178
Corona, CA 92878
(951) 268-6268

City of Orange
N/S: Main Street
E/W: La Veta Avenue
Weather: Clear

File Name : 05_ORN_Main_La Veta AM
Site Code : 00320130
Start Date : 2/27/2020
Page No : 1

Groups Printed- Total Volume

	Main Street Southbound				La Veta Avenue Westbound				Main Street Northbound				La Veta Avenue Eastbound				
Start Time	Left	Thru	Right	App. Total	Left	Thru	Right	App. Total	Left	Thru	Right	App. Total	Left	Thru	Right	App. Total	Int. Total
07:00 AM	27	227	29	283	63	75	37	175	9	98	45	152	60	59	35	154	764
07:15 AM	44	259	26	329	73	92	47	212	18	122	59	199	91	72	43	206	946
07:30 AM	47	295	45	387	74	131	53	258	17	140	82	239	81	77	59	217	1101
07:45 AM	52	263	38	353	103	142	59	304	24	151	79	254	75	61	62	198	1109
Total	170	1044	138	1352	313	440	196	949	68	511	265	844	307	269	199	775	3920
08:00 AM	44	286	44	374	89	128	54	271	25	157	62	244	59	100	56	215	1104
08:15 AM	49	231	40	320	54	116	41	211	22	147	70	239	73	46	48	167	937
08:30 AM	50	314	32	396	71	91	59	221	16	134	60	210	89	67	52	208	1035
08:45 AM	33	176	30	239	70	83	57	210	24	108	65	197	77	57	58	192	838
Total	176	1007	146	1329	284	418	211	913	87	546	257	890	298	270	214	782	3914
Grand Total	346	2051	284	2681	597	858	407	1862	155	1057	522	1734	605	539	413	1557	7834
Apprch %	12.9	76.5	10.6		32.1	46.1	21.9		8.9	61	30.1		38.9	34.6	26.5		
Total %	4.4	26.2	3.6	34.2	7.6	11	5.2	23.8	2	13.5	6.7	22.1	7.7	6.9	5.3	19.9	

	Main Street Southbound				La Veta Avenue Westbound				Main Street Northbound				La Veta Avenue Eastbound				
Start Time	Left	Thru	Right	App. Total	Left	Thru	Right	App. Total	Left	Thru	Right	App. Total	Left	Thru	Right	App. Total	Int. Total
Peak Hour Analysis From 07:00 AM to 08:45 AM - Peak 1 of 1																	
Peak Hour for Entire Intersection Begins at 07:15 AM																	
07:15 AM	44	259	26	329	73	92	47	212	18	122	59	199	91	72	43	206	946
07:30 AM	47	295	45	387	74	131	53	258	17	140	82	239	81	77	59	217	1101
07:45 AM	52	263	38	353	103	142	59	304	24	151	79	254	75	61	62	198	1109
08:00 AM	44	286	44	374	89	128	54	271	25	157	62	244	59	100	56	215	1104
Total Volume	187	1103	153	1443	339	493	213	1045	84	570	282	936	306	310	220	836	4260
% App. Total	13	76.4	10.6		32.4	47.2	20.4		9	60.9	30.1		36.6	37.1	26.3		
PHF	.899	.935	.850	.932	.823	.868	.903	.859	.840	.908	.860	.921	.841	.775	.887	.963	.960

Counts Unlimited
PO Box 1178
Corona, CA 92878
(951) 268-6268

City of Orange
N/S: Main Street
E/W: La Veta Avenue
Weather: Clear

File Name : 05_ORN_Main_La Veta AM
Site Code : 00320130
Start Date : 2/27/2020
Page No : 2

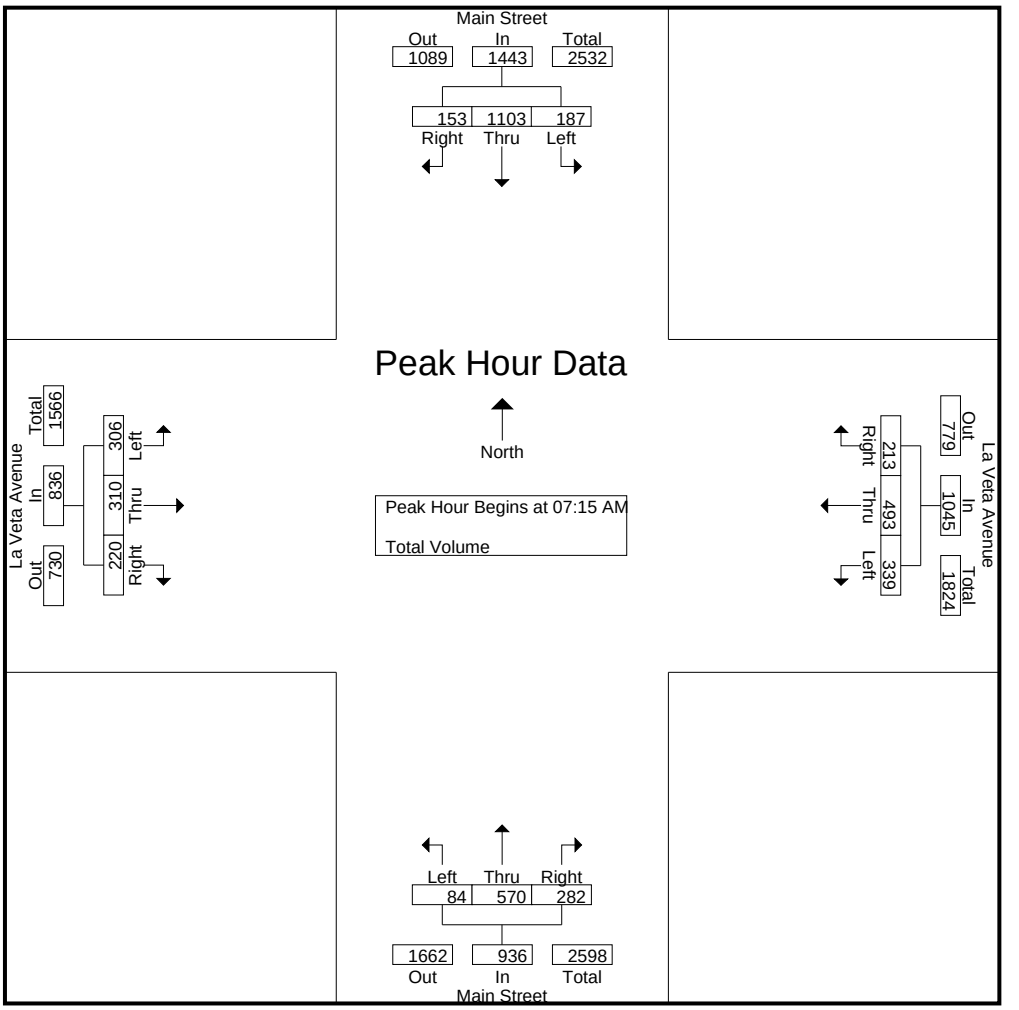

Peak Hour Analysis From 07:00 AM to 08:45 AM - Peak 1 of 1
Peak Hour for Each Approach Begins at:

	07:15 AM				07:15 AM				07:30 AM				07:15 AM			
+0 mins.	44	259	26	329	73	92	47	212	17	140	82	239	91	72	43	206
+15 mins.	47	295	45	387	74	131	53	258	24	151	79	254	81	77	59	217
+30 mins.	52	263	38	353	103	142	59	304	25	157	62	244	75	61	62	198
+45 mins.	44	286	44	374	89	128	54	271	22	147	70	239	59	100	56	215
Total Volume	187	1103	153	1443	339	493	213	1045	88	595	293	976	306	310	220	836
% App. Total	13	76.4	10.6		32.4	47.2	20.4		9	61	30		36.6	37.1	26.3	
PHF	.899	.935	.850	.932	.823	.868	.903	.859	.880	.947	.893	.961	.841	.775	.887	.963

Counts Unlimited
PO Box 1178
Corona, CA 92878
(951) 268-6268

City of Orange
N/S: Main Street
E/W: La Veta Avenue
Weather: Clear

File Name : 05_ORN_Main_La Veta PM
Site Code : 00320130
Start Date : 2/27/2020
Page No : 1

Groups Printed- Total Volume

	Main Street Southbound				La Veta Avenue Westbound				Main Street Northbound				La Veta Avenue Eastbound				
Start Time	Left	Thru	Right	App. Total	Left	Thru	Right	App. Total	Left	Thru	Right	App. Total	Left	Thru	Right	App. Total	Int. Total
04:00 PM	37	185	46	268	87	82	32	201	60	184	103	347	62	121	61	244	1060
04:15 PM	36	184	39	259	74	72	26	172	65	211	95	371	84	115	58	257	1059
04:30 PM	26	217	63	306	75	100	40	215	79	248	98	425	71	114	55	240	1186
04:45 PM	47	216	47	310	88	94	38	220	61	212	92	365	62	126	61	249	1144
Total	146	802	195	1143	324	348	136	808	265	855	388	1508	279	476	235	990	4449
05:00 PM	34	217	61	312	89	138	59	286	82	240	124	446	68	129	50	247	1291
05:15 PM	45	227	48	320	85	104	39	228	76	256	111	443	69	129	48	246	1237
05:30 PM	39	206	53	298	80	119	43	242	69	216	99	384	51	113	56	220	1144
05:45 PM	34	207	63	304	81	95	45	221	58	253	95	406	45	86	41	172	1103
Total	152	857	225	1234	335	456	186	977	285	965	429	1679	233	457	195	885	4775
Grand Total	298	1659	420	2377	659	804	322	1785	550	1820	817	3187	512	933	430	1875	9224
Apprch %	12.5	69.8	17.7		36.9	45	18		17.3	57.1	25.6		27.3	49.8	22.9		
Total %	3.2	18	4.6	25.8	7.1	8.7	3.5	19.4	6	19.7	8.9	34.6	5.6	10.1	4.7	20.3	

	Main Street Southbound				La Veta Avenue Westbound				Main Street Northbound				La Veta Avenue Eastbound				
Start Time	Left	Thru	Right	App. Total	Left	Thru	Right	App. Total	Left	Thru	Right	App. Total	Left	Thru	Right	App. Total	Int. Total
Peak Hour Analysis From 04:00 PM to 05:45 PM - Peak 1 of 1																	
Peak Hour for Entire Intersection Begins at 04:30 PM																	
04:30 PM	26	217	63	306	75	100	40	215	79	248	98	425	71	114	55	240	1186
04:45 PM	47	216	47	310	88	94	38	220	61	212	92	365	62	126	61	249	1144
05:00 PM	34	217	61	312	89	138	59	286	82	240	124	446	68	129	50	247	1291
05:15 PM	45	227	48	320	85	104	39	228	76	256	111	443	69	129	48	246	1237
Total Volume	152	877	219	1248	337	436	176	949	298	956	425	1679	270	498	214	982	4858
% App. Total	12.2	70.3	17.5		35.5	45.9	18.5		17.7	56.9	25.3		27.5	50.7	21.8		
PHF	.809	.966	.869	.975	.947	.790	.746	.830	.909	.934	.857	.941	.951	.965	.877	.986	.941

Counts Unlimited
PO Box 1178
Corona, CA 92878
(951) 268-6268

City of Orange
N/S: Main Street
E/W: La Veta Avenue
Weather: Clear

File Name : 05_ORN_Main_La Veta PM
Site Code : 00320130
Start Date : 2/27/2020
Page No : 2

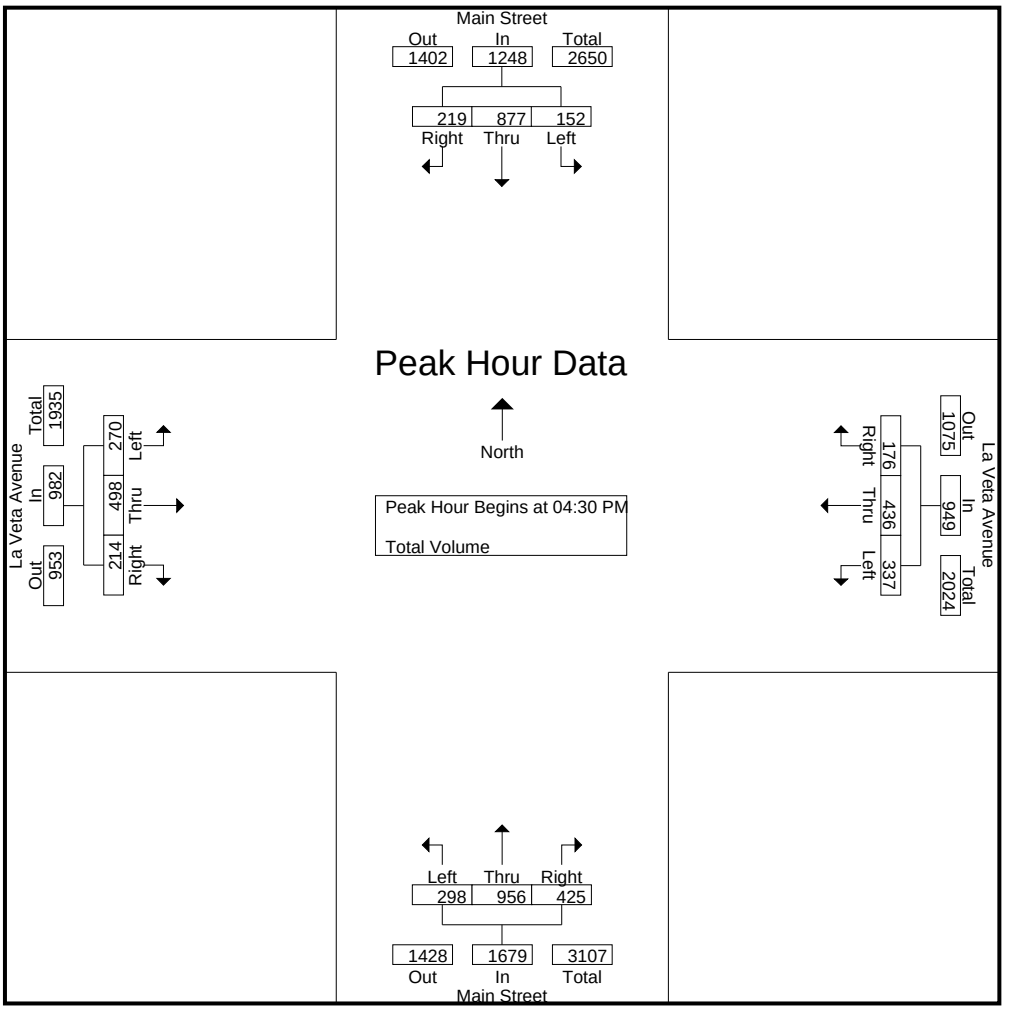

Peak Hour Analysis From 04:00 PM to 05:45 PM - Peak 1 of 1
Peak Hour for Each Approach Begins at:

	04:30 PM				05:00 PM				04:30 PM				04:15 PM			
+0 mins.	26	217	63	306	89	138	59	286	79	248	98	425	84	115	58	257
+15 mins.	47	216	47	310	85	104	39	228	61	212	92	365	71	114	55	240
+30 mins.	34	217	61	312	80	119	43	242	82	240	124	446	62	126	61	249
+45 mins.	45	227	48	320	81	95	45	221	76	256	111	443	68	129	50	247
Total Volume	152	877	219	1248	335	456	186	977	298	956	425	1679	285	484	224	993
% App. Total	12.2	70.3	17.5		34.3	46.7	19		17.7	56.9	25.3		28.7	48.7	22.6	
PHF	.809	.966	.869	.975	.941	.826	.788	.854	.909	.934	.857	.941	.848	.938	.918	.966

Counts Unlimited
PO Box 1178
Corona, CA 92878
(951) 268-6268

City of Orange
N/S: Driveways
E/W: Palmyra Avenue
Weather: Clear

File Name : 06_ORN_Driveway_Palmyra AM
Site Code : 00320130
Start Date : 2/27/2020
Page No : 1

Groups Printed- Total Volume

	UCI Health- Orange Main Street Driveway Southbound				Palmyra Avenue Westbound				Saint Joseph Hospital Renal Center Driveway Northbound				Palmyra Avenue Eastbound				
Start Time	Left	Thru	Right	App. Total	Left	Thru	Right	App. Total	Left	Thru	Right	App. Total	Left	Thru	Right	App. Total	Int. Total
07:00 AM	0	0	0	0	2	5	0	7	1	0	0	1	0	6	0	6	14
07:15 AM	0	0	1	1	1	5	0	6	2	0	0	2	1	9	0	10	19
07:30 AM	0	0	1	1	2	10	1	13	2	0	2	4	2	9	0	11	29
07:45 AM	1	0	0	1	3	16	2	21	3	0	1	4	2	17	0	19	45
Total	1	0	2	3	8	36	3	47	8	0	3	11	5	41	0	46	107
08:00 AM	0	0	1	1	4	13	0	17	0	0	1	1	6	14	0	20	39
08:15 AM	0	0	1	1	5	10	1	16	3	0	0	3	3	13	0	16	36
08:30 AM	0	0	3	3	2	12	0	14	1	0	0	1	4	5	0	9	27
08:45 AM	0	0	3	3	0	8	0	8	2	0	1	3	3	12	0	15	29
Total	0	0	8	8	11	43	1	55	6	0	2	8	16	44	0	60	131
Grand Total	1	0	10	11	19	79	4	102	14	0	5	19	21	85	0	106	238
Apprch %	9.1	0	90.9		18.6	77.5	3.9		73.7	0	26.3		19.8	80.2	0		
Total %	0.4	0	4.2	4.6	8	33.2	1.7	42.9	5.9	0	2.1	8	8.8	35.7	0	44.5	

	UCI Health- Orange Main Street Driveway Southbound				Palmyra Avenue Westbound				Saint Joseph Hospital Renal Center Driveway Northbound				Palmyra Avenue Eastbound				
Start Time	Left	Thru	Right	App. Total	Left	Thru	Right	App. Total	Left	Thru	Right	App. Total	Left	Thru	Right	App. Total	Int. Total
Peak Hour Analysis From 07:00 AM to 08:45 AM - Peak 1 of 1																	
Peak Hour for Entire Intersection Begins at 07:30 AM																	
07:30 AM	0	0	**1**	**1**	2	10	1	13	2	0	**2**	**4**	2	9	0	11	29
07:45 AM	**1**	0	0	1	3	**16**	**2**	**21**	**3**	0	1	4	2	**17**	0	19	**45**
08:00 AM	0	0	1	1	4	13	0	17	0	0	1	1	**6**	14	0	**20**	39
08:15 AM	0	0	1	1	**5**	10	1	16	3	0	0	3	3	13	0	16	36
Total Volume	1	0	3	4	14	49	4	67	8	0	4	12	13	53	0	66	149
% App. Total	25	0	75		20.9	73.1	6		66.7	0	33.3		19.7	80.3	0		
PHF	.250	.000	.750	1.00	.700	.766	.500	.798	.667	.000	.500	.750	.542	.779	.000	.825	.828

Counts Unlimited
PO Box 1178
Corona, CA 92878
(951) 268-6268

City of Orange
N/S: Driveways
E/W: Palmyra Avenue
Weather: Clear

File Name : 06_ORN_Driveway_Palmyra AM
Site Code : 00320130
Start Date : 2/27/2020
Page No : 2

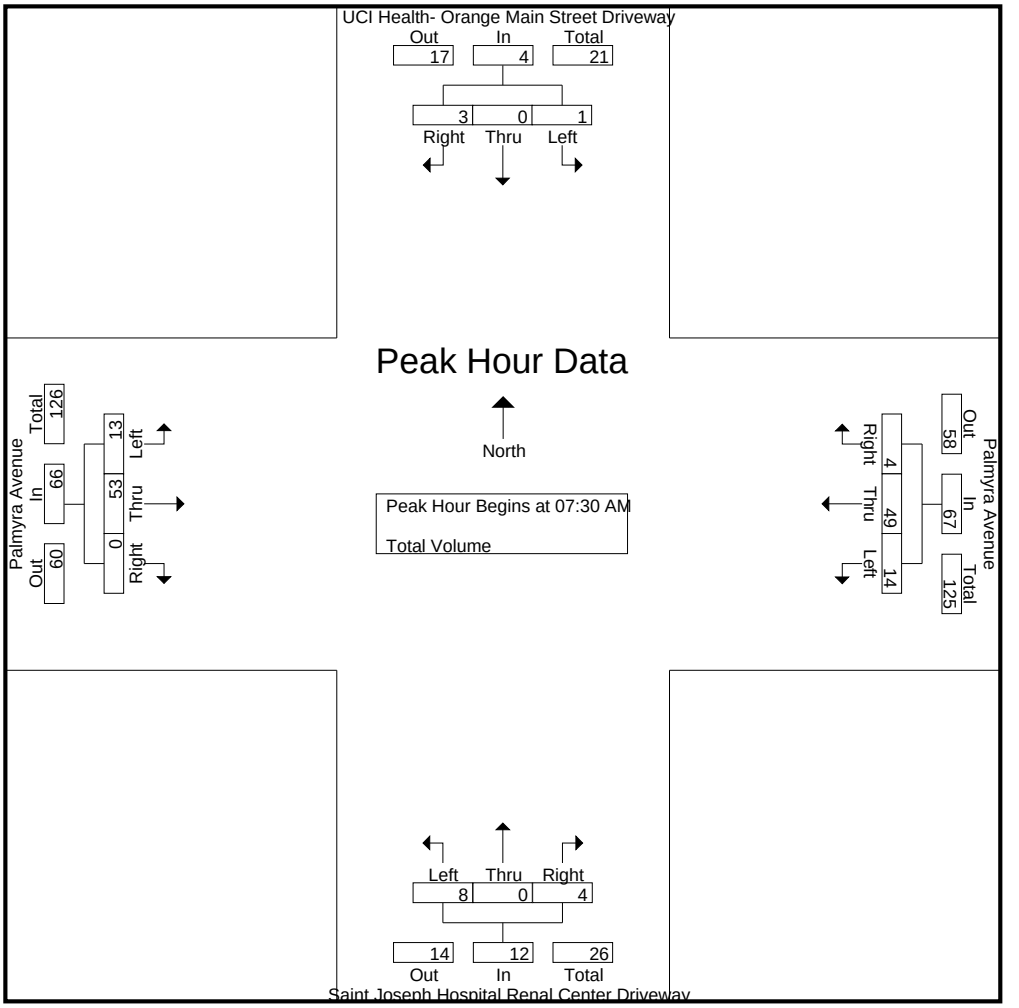

Peak Hour Analysis From 07:00 AM to 08:45 AM - Peak 1 of 1
Peak Hour for Each Approach Begins at:

	08:00 AM				07:45 AM				07:30 AM				07:30 AM			
+0 mins.	0	0	1	1	3	**16**	**2**	**21**	2	0	**2**	**4**	2	9	0	11
+15 mins.	0	0	1	1	4	13	0	17	**3**	0	1	4	2	**17**	0	19
+30 mins.	0	0	**3**	**3**	**5**	10	1	16	0	0	1	1	**6**	14	0	**20**
+45 mins.	0	0	3	3	2	12	0	14	3	0	0	3	3	13	0	16
Total Volume	0	0	8	8	14	51	3	68	8	0	4	12	13	53	0	66
% App. Total	0	0	100		20.6	75	4.4		66.7	0	33.3		19.7	80.3	0	
PHF	.000	.000	.667	.667	.700	.797	.375	.810	.667	.000	.500	.750	.542	.779	.000	.825

Counts Unlimited
PO Box 1178
Corona, CA 92878
(951) 268-6268

City of Orange
N/S: Driveways
E/W: Palmyra Avenue
Weather: Clear

File Name : 06_ORN_Driveway_Palmyra PM
Site Code : 00320130
Start Date : 2/27/2020
Page No : 1

Groups Printed- Total Volume

	UCI Health- Orange Main Street Driveway Southbound				Palmyra Avenue Westbound				Saint Joseph Hospital Renal Center Driveway Northbound				Palmyra Avenue Eastbound				
Start Time	Left	Thru	Right	App. Total	Left	Thru	Right	App. Total	Left	Thru	Right	App. Total	Left	Thru	Right	App. Total	Int. Total
04:00 PM	1	0	5	6	0	10	1	11	5	0	6	11	1	12	0	13	41
04:15 PM	0	0	3	3	0	5	0	5	3	0	2	5	2	13	0	15	28
04:30 PM	0	0	2	2	0	5	0	5	11	0	4	15	2	14	0	16	38
04:45 PM	2	0	3	5	2	11	0	13	7	0	7	14	0	17	0	17	49
Total	3	0	13	16	2	31	1	34	26	0	19	45	5	56	0	61	156
05:00 PM	0	0	2	2	0	19	0	19	13	0	6	19	0	21	0	21	61
05:15 PM	0	0	4	4	0	12	0	12	7	1	7	15	0	13	0	13	44
05:30 PM	2	0	3	5	1	7	2	10	5	0	3	8	2	12	0	14	37
05:45 PM	1	0	3	4	1	9	0	10	2	1	3	6	1	11	0	12	32
Total	3	0	12	15	2	47	2	51	27	2	19	48	3	57	0	60	174
Grand Total	6	0	25	31	4	78	3	85	53	2	38	93	8	113	0	121	330
Apprch %	19.4	0	80.6		4.7	91.8	3.5		57	2.2	40.9		6.6	93.4	0		
Total %	1.8	0	7.6	9.4	1.2	23.6	0.9	25.8	16.1	0.6	11.5	28.2	2.4	34.2	0	36.7	

	UCI Health- Orange Main Street Driveway Southbound				Palmyra Avenue Westbound				Saint Joseph Hospital Renal Center Driveway Northbound				Palmyra Avenue Eastbound				
Start Time	Left	Thru	Right	App. Total	Left	Thru	Right	App. Total	Left	Thru	Right	App. Total	Left	Thru	Right	App. Total	Int. Total
Peak Hour Analysis From 04:00 PM to 05:45 PM - Peak 1 of 1																	
Peak Hour for Entire Intersection Begins at 04:30 PM																	
04:30 PM	0	0	2	2	0	5	0	5	11	0	4	15	**2**	14	0	16	38
04:45 PM	**2**	0	3	**5**	**2**	11	0	13	7	0	**7**	14	0	17	0	17	49
05:00 PM	0	0	2	2	0	**19**	0	**19**	**13**	0	6	**19**	0	**21**	0	**21**	**61**
05:15 PM	0	0	**4**	4	0	12	0	12	7	**1**	7	15	0	13	0	13	44
Total Volume	2	0	11	13	2	47	0	49	38	1	24	63	2	65	0	67	192
% App. Total	15.4	0	84.6		4.1	95.9	0		60.3	1.6	38.1		3	97	0		
PHF	.250	.000	.688	.650	.250	.618	.000	.645	.731	.250	.857	.829	.250	.774	.000	.798	.787

Counts Unlimited
PO Box 1178
Corona, CA 92878
(951) 268-6268

City of Orange
N/S: Driveways
E/W: Palmyra Avenue
Weather: Clear

File Name : 06_ORN_Driveway_Palmyra PM
Site Code : 00320130
Start Date : 2/27/2020
Page No : 2

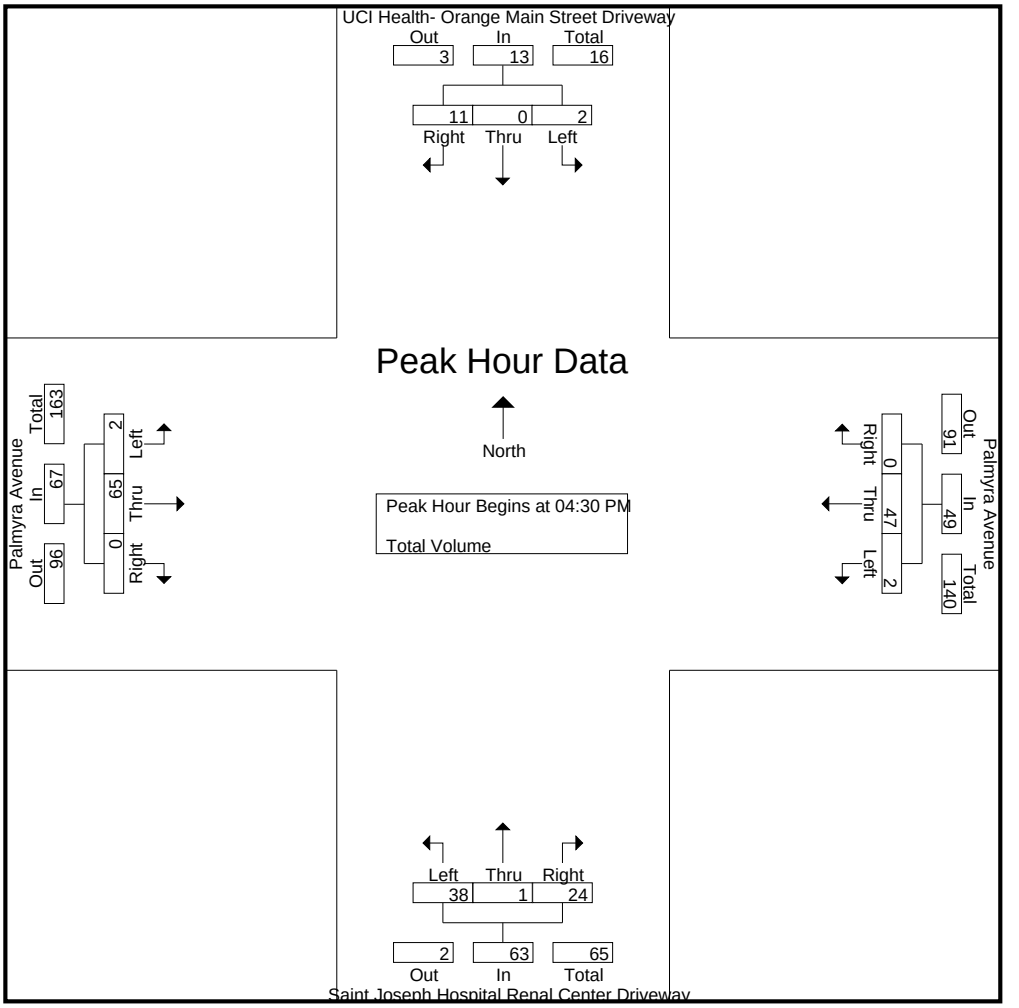

Peak Hour Analysis From 04:00 PM to 05:45 PM - Peak 1 of 1
Peak Hour for Each Approach Begins at:

	04:00 PM				04:45 PM				04:30 PM				04:15 PM			
+0 mins.	1	0	**5**	**6**	**2**	11	0	13	11	0	4	15	**2**	13	0	15
+15 mins.	0	0	3	3	0	**19**	0	**19**	7	0	**7**	14	2	14	0	16
+30 mins.	0	0	2	2	0	12	0	12	**13**	0	6	**19**	0	17	0	17
+45 mins.	**2**	0	3	5	1	7	**2**	10	7	**1**	7	15	0	**21**	0	**21**
Total Volume	3	0	13	16	3	49	2	54	38	1	24	63	4	65	0	69
% App. Total	18.8	0	81.2		5.6	90.7	3.7		60.3	1.6	38.1		5.8	94.2	0	
PHF	.375	.000	.650	.667	.375	.645	.250	.711	.731	.250	.857	.829	.500	.774	.000	.821

APPENDIX B

ICU LEVEL OF SERVICE WORKSHEETS

Level Of Service Computation Report
ICU 1(Loss as Cycle Length %) Method (Future Volume Alternative)

Intersection #1 Main Street/Almond Avenue

Cycle (sec):	100	Critical Vol./Cap.(X):	0.502
Loss Time (sec):	5	Average Delay (sec/veh):	xxxxxx
Optimal Cycle:	24	Level Of Service:	A

Street Name:	Main Street						W. Almond Avenue					
Approach:	North Bound			South Bound			East Bound			West Bound		
Movement:	L	T	R	L	T	R	L	T	R	L	T	R
Control:	Protected			Protected			Permitted			Permitted		
Rights:	Include			Include			Include			Include		
Min. Green:	0	0	0	0	0	0	0	0	0	0	0	0
Y+R:	4.0	4.0	4.0	4.0	4.0	4.0	4.0	4.0	4.0	4.0	4.0	4.0
Lanes:	1	0 3	0 1	1	0 2	1 0	1	0 0	1 0	1	0 0	1 0
Volume Module:												
Base Vol:	17	716	86	72	1476	15	12	113	37	105	72	100
Growth Adj:	1.00	1.00	1.00	1.00	1.00	1.00	1.00	1.00	1.00	1.00	1.00	1.00
Initial Bse:	17	716	86	72	1476	15	12	113	37	105	72	100
Added Vol:	0	0	0	0	0	0	0	0	0	0	0	0
PasserByVol:	0	0	0	0	0	0	0	0	0	0	0	0
Initial Fut:	17	716	86	72	1476	15	12	113	37	105	72	100
User Adj:	1.00	1.00	1.00	1.00	1.00	1.00	1.00	1.00	1.00	1.00	1.00	1.00
PHF Adj:	1.00	1.00	1.00	1.00	1.00	1.00	1.00	1.00	1.00	1.00	1.00	1.00
PHF Volume:	17	716	86	72	1476	15	12	113	37	105	72	100
Reduct Vol:	0	0	0	0	0	0	0	0	0	0	0	0
Reduced Vol:	17	716	86	72	1476	15	12	113	37	105	72	100
PCE Adj:	1.00	1.00	1.00	1.00	1.00	1.00	1.00	1.00	1.00	1.00	1.00	1.00
MLF Adj:	1.00	1.00	1.00	1.00	1.00	1.00	1.00	1.00	1.00	1.00	1.00	1.00
FinalVolume:	17	716	86	72	1476	15	12	113	37	105	72	100
Saturation Flow Module:												
Sat/Lane:	1700	1700	1700	1700	1700	1700	1700	1700	1700	1700	1700	1700
Adjustment:	1.00	1.00	1.00	1.00	1.00	1.00	1.00	1.00	1.00	1.00	1.00	1.00
Lanes:	1.00	3.00	1.00	1.00	2.97	0.03	1.00	0.75	0.25	1.00	0.42	0.58
Final Sat.:	1700	5100	1700	1700	5049	51	1700	1281	419	1700	712	988
Capacity Analysis Module:												
Vol/Sat:	0.01	0.14	0.05	0.04	0.29	0.29	0.01	0.09	0.09	0.06	0.10	0.10
Crit Moves:	****			****			****			****		

Level Of Service Computation Report
ICU 1(Loss as Cycle Length %) Method (Future Volume Alternative)

Intersection #2 Main Street/Palmyra Avenue

Cycle (sec):	100	Critical Vol./Cap.(X):	0.521
Loss Time (sec):	5	Average Delay (sec/veh):	xxxxxx
Optimal Cycle:	25	Level Of Service:	A

Street Name:	Main Street						W. Palmyra Avenue					
Approach:	North Bound			South Bound			East Bound			West Bound		
Movement:	L	T	R	L	T	R	L	T	R	L	T	R
Control:	Protected			Protected			Permitted			Permitted		
Rights:	Include			Include			Include			Include		
Min. Green:	0	0	0	0	0	0	0	0	0	0	0	0
Y+R:	4.0	4.0	4.0	4.0	4.0	4.0	4.0	4.0	4.0	4.0	4.0	4.0
Lanes:	1 0	2	1 0	1 0	2	1 0	0 0	1!	0 0	0 0	1!	0 0
Volume Module:												
Base Vol:	82	757	23	16	1390	62	95	31	92	17	24	20
Growth Adj:	1.00	1.00	1.00	1.00	1.00	1.00	1.00	1.00	1.00	1.00	1.00	1.00
Initial Bse:	82	757	23	16	1390	62	95	31	92	17	24	20
Added Vol:	0	0	0	0	0	0	0	0	0	0	0	0
PasserByVol:	0	0	0	0	0	0	0	0	0	0	0	0
Initial Fut:	82	757	23	16	1390	62	95	31	92	17	24	20
User Adj:	1.00	1.00	1.00	1.00	1.00	1.00	1.00	1.00	1.00	1.00	1.00	1.00
PHF Adj:	1.00	1.00	1.00	1.00	1.00	1.00	1.00	1.00	1.00	1.00	1.00	1.00
PHF Volume:	82	757	23	16	1390	62	95	31	92	17	24	20
Reduct Vol:	0	0	0	0	0	0	0	0	0	0	0	0
Reduced Vol:	82	757	23	16	1390	62	95	31	92	17	24	20
PCE Adj:	1.00	1.00	1.00	1.00	1.00	1.00	1.00	1.00	1.00	1.00	1.00	1.00
MLF Adj:	1.00	1.00	1.00	1.00	1.00	1.00	1.00	1.00	1.00	1.00	1.00	1.00
FinalVolume:	82	757	23	16	1390	62	95	31	92	17	24	20
Saturation Flow Module:												
Sat/Lane:	1700	1700	1700	1700	1700	1700	1700	1700	1700	1700	1700	1700
Adjustment:	1.00	1.00	1.00	1.00	1.00	1.00	1.00	1.00	1.00	1.00	1.00	1.00
Lanes:	1.00	2.91	0.09	1.00	2.87	0.13	0.44	0.14	0.42	0.28	0.39	0.33
Final Sat.:	1700	4950	150	1700	4882	218	741	242	717	474	669	557
Capacity Analysis Module:												
Vol/Sat:	0.05	0.15	0.15	0.01	0.28	0.28	0.06	0.13	0.13	0.01	0.04	0.04
Crit Moves:	****			****			****			****		

Level Of Service Computation Report
ICU 1(Loss as Cycle Length %) Method (Future Volume Alternative)

Intersection #4 Main Street/Stewart Drive-Culver Avenue

Cycle (sec):	100	Critical Vol./Cap.(X):	0.454
Loss Time (sec):	5	Average Delay (sec/veh):	xxxxxx
Optimal Cycle:	22	Level Of Service:	A

Street Name:	Main Street						W. Stewart Drive-W. Culver Street					
Approach:	North Bound			South Bound			East Bound			West Bound		
Movement:	L	T	R	L	T	R	L	T	R	L	T	R
Control:	Protected			Protected			Prot+Permit			Prot+Permit		
Rights:	Include			Include			Include			Include		
Min. Green:	0	0	0	0	0	0	0	0	0	0	0	0
Y+R:	4.0	4.0	4.0	4.0	4.0	4.0	4.0	4.0	4.0	4.0	4.0	4.0
Lanes:	1 0	2	1 0	1 0	2	1 0	1 0	1	0 1	1 0	1!	0 0
Volume Module:												
Base Vol:	63	911	82	94	1281	41	51	10	115	89	3	45
Growth Adj:	1.00	1.00	1.00	1.00	1.00	1.00	1.00	1.00	1.00	1.00	1.00	1.00
Initial Bse:	63	911	82	94	1281	41	51	10	115	89	3	45
Added Vol:	0	0	0	0	0	0	0	0	0	0	0	0
PasserByVol:	0	0	0	0	0	0	0	0	0	0	0	0
Initial Fut:	63	911	82	94	1281	41	51	10	115	89	3	45
User Adj:	1.00	1.00	1.00	1.00	1.00	1.00	1.00	1.00	1.00	1.00	1.00	1.00
PHF Adj:	1.00	1.00	1.00	1.00	1.00	1.00	1.00	1.00	1.00	1.00	1.00	1.00
PHF Volume:	63	911	82	94	1281	41	51	10	115	89	3	45
Reduct Vol:	0	0	0	0	0	0	0	0	0	0	0	0
Reduced Vol:	63	911	82	94	1281	41	51	10	115	89	3	45
PCE Adj:	1.00	1.00	1.00	1.00	1.00	1.00	1.00	1.00	1.00	1.00	1.00	1.00
MLF Adj:	1.00	1.00	1.00	1.00	1.00	1.00	1.00	1.00	1.00	1.00	1.00	1.00
FinalVolume:	63	911	82	94	1281	41	51	10	115	89	3	45
Saturation Flow Module:												
Sat/Lane:	1700	1700	1700	1700	1700	1700	1700	1700	1700	1700	1700	1700
Adjustment:	1.00	1.00	1.00	1.00	1.00	1.00	1.00	1.00	1.00	1.00	1.00	1.00
Lanes:	1.00	2.75	0.25	1.00	2.91	0.09	1.00	1.00	1.00	1.30	0.04	0.66
Final Sat.:	1700	4679	421	1700	4942	158	1700	1700	1700	2209	74	1117
Capacity Analysis Module:												
Vol/Sat:	0.04	0.19	0.19	0.06	0.26	0.26	0.03	0.01	0.07	0.04	0.04	0.04
Crit Moves:	****			****					****	****		

Level Of Service Computation Report
ICU 1(Loss as Cycle Length %) Method (Future Volume Alternative)

Intersection #5 Main Street/La Veta Avenue

Cycle (sec):	100	Critical Vol./Cap.(X):	0.550
Loss Time (sec):	5	Average Delay (sec/veh):	xxxxxx
Optimal Cycle:	26	Level Of Service:	A

Street Name:	Main Street						La Veta Avenue					
Approach:	North Bound			South Bound			East Bound			West Bound		
Movement:	L	T	R	L	T	R	L	T	R	L	T	R
Control:	Protected			Protected			Protected			Protected		
Rights:	Include			Include			Include			Include		
Min. Green:	0	0	0	0	0	0	0	0	0	0	0	0
Y+R:	4.0	4.0	4.0	4.0	4.0	4.0	4.0	4.0	4.0	4.0	4.0	4.0
Lanes:	2 0	3 0	1	2 0	2 1	0	2 0	2 1	0	2 0	2 0	1
Volume Module:												
Base Vol:	84	570	282	187	1103	153	306	310	220	339	493	213
Growth Adj:	1.00	1.00	1.00	1.00	1.00	1.00	1.00	1.00	1.00	1.00	1.00	1.00
Initial Bse:	84	570	282	187	1103	153	306	310	220	339	493	213
Added Vol:	0	0	0	0	0	0	0	0	0	0	0	0
PasserByVol:	0	0	0	0	0	0	0	0	0	0	0	0
Initial Fut:	84	570	282	187	1103	153	306	310	220	339	493	213
User Adj:	1.00	1.00	1.00	1.00	1.00	1.00	1.00	1.00	1.00	1.00	1.00	1.00
PHF Adj:	1.00	1.00	1.00	1.00	1.00	1.00	1.00	1.00	1.00	1.00	1.00	1.00
PHF Volume:	84	570	282	187	1103	153	306	310	220	339	493	213
Reduct Vol:	0	0	0	0	0	0	0	0	0	0	0	0
Reduced Vol:	84	570	282	187	1103	153	306	310	220	339	493	213
PCE Adj:	1.00	1.00	1.00	1.00	1.00	1.00	1.00	1.00	1.00	1.00	1.00	1.00
MLF Adj:	1.00	1.00	1.00	1.00	1.00	1.00	1.00	1.00	1.00	1.00	1.00	1.00
FinalVolume:	84	570	282	187	1103	153	306	310	220	339	493	213
Saturation Flow Module:												
Sat/Lane:	1700	1700	1700	1700	1700	1700	1700	1700	1700	1700	1700	1700
Adjustment:	1.00	1.00	1.00	1.00	1.00	1.00	1.00	1.00	1.00	1.00	1.00	1.00
Lanes:	2.00	3.00	1.00	2.00	2.63	0.37	2.00	2.00	1.00	2.00	2.00	1.00
Final Sat.:	3400	5100	1700	3400	4479	621	3400	3400	1700	3400	3400	1700
Capacity Analysis Module:												
Vol/Sat:	0.02	0.11	0.17	0.06	0.25	0.25	0.09	0.09	0.13	0.10	0.15	0.13
Crit Moves:	****				****				****	****		

Level Of Service Computation Report
ICU 1(Loss as Cycle Length %) Method (Future Volume Alternative)

Intersection #1 Main Street/Almond Avenue

Cycle (sec):	100	Critical Vol./Cap.(X):	0.487
Loss Time (sec):	5	Average Delay (sec/veh):	xxxxxx
Optimal Cycle:	23	Level Of Service:	A

Street Name:	Main Street						W. Almond Avenue					
Approach:	North Bound			South Bound			East Bound			West Bound		
Movement:	L	T	R	L	T	R	L	T	R	L	T	R
Control:	Protected			Protected			Permitted			Permitted		
Rights:	Include			Include			Include			Include		
Min. Green:	0	0	0	0	0	0	0	0	0	0	0	0
Y+R:	4.0	4.0	4.0	4.0	4.0	4.0	4.0	4.0	4.0	4.0	4.0	4.0
Lanes:	1 0	3 0	1	1 0	2 1	0	1 0	0 1	0	1 0	0 1	0
Volume Module:												
Base Vol:	37	1440	111	45	982	37	16	55	31	76	108	94
Growth Adj:	1.00	1.00	1.00	1.00	1.00	1.00	1.00	1.00	1.00	1.00	1.00	1.00
Initial Bse:	37	1440	111	45	982	37	16	55	31	76	108	94
Added Vol:	0	0	0	0	0	0	0	0	0	0	0	0
PasserByVol:	0	0	0	0	0	0	0	0	0	0	0	0
Initial Fut:	37	1440	111	45	982	37	16	55	31	76	108	94
User Adj:	1.00	1.00	1.00	1.00	1.00	1.00	1.00	1.00	1.00	1.00	1.00	1.00
PHF Adj:	1.00	1.00	1.00	1.00	1.00	1.00	1.00	1.00	1.00	1.00	1.00	1.00
PHF Volume:	37	1440	111	45	982	37	16	55	31	76	108	94
Reduct Vol:	0	0	0	0	0	0	0	0	0	0	0	0
Reduced Vol:	37	1440	111	45	982	37	16	55	31	76	108	94
PCE Adj:	1.00	1.00	1.00	1.00	1.00	1.00	1.00	1.00	1.00	1.00	1.00	1.00
MLF Adj:	1.00	1.00	1.00	1.00	1.00	1.00	1.00	1.00	1.00	1.00	1.00	1.00
FinalVolume:	37	1440	111	45	982	37	16	55	31	76	108	94
Saturation Flow Module:												
Sat/Lane:	1700	1700	1700	1700	1700	1700	1700	1700	1700	1700	1700	1700
Adjustment:	1.00	1.00	1.00	1.00	1.00	1.00	1.00	1.00	1.00	1.00	1.00	1.00
Lanes:	1.00	3.00	1.00	1.00	2.89	0.11	1.00	0.64	0.36	1.00	0.53	0.47
Final Sat.:	1700	5100	1700	1700	4915	185	1700	1087	613	1700	909	791
Capacity Analysis Module:												
Vol/Sat:	0.02	0.28	0.07	0.03	0.20	0.20	0.01	0.05	0.05	0.04	0.12	0.12
Crit Moves:		****		****			****				****	

Level Of Service Computation Report
ICU 1(Loss as Cycle Length %) Method (Future Volume Alternative)

Intersection #2 Main Street/Palmyra Avenue

Cycle (sec):	100	Critical Vol./Cap.(X):	0.486
Loss Time (sec):	5	Average Delay (sec/veh):	xxxxxx
Optimal Cycle:	23	Level Of Service:	A

Street Name:	Main Street						W. Palmyra Avenue					
Approach:	North Bound			South Bound			East Bound			West Bound		
Movement:	L	T	R	L	T	R	L	T	R	L	T	R
Control:	Protected			Protected			Permitted			Permitted		
Rights:	Include			Include			Include			Include		
Min. Green:	0	0	0	0	0	0	0	0	0	0	0	0
Y+R:	4.0	4.0	4.0	4.0	4.0	4.0	4.0	4.0	4.0	4.0	4.0	4.0
Lanes:	1 0	2	1 0	1 0	2	1 0	0 0	1!	0 0	0 0	1!	0 0
Volume Module:												
Base Vol:	62	1451	32	18	994	62	101	15	80	33	39	27
Growth Adj:	1.00	1.00	1.00	1.00	1.00	1.00	1.00	1.00	1.00	1.00	1.00	1.00
Initial Bse:	62	1451	32	18	994	62	101	15	80	33	39	27
Added Vol:	0	0	0	0	0	0	0	0	0	0	0	0
PasserByVol:	0	0	0	0	0	0	0	0	0	0	0	0
Initial Fut:	62	1451	32	18	994	62	101	15	80	33	39	27
User Adj:	1.00	1.00	1.00	1.00	1.00	1.00	1.00	1.00	1.00	1.00	1.00	1.00
PHF Adj:	1.00	1.00	1.00	1.00	1.00	1.00	1.00	1.00	1.00	1.00	1.00	1.00
PHF Volume:	62	1451	32	18	994	62	101	15	80	33	39	27
Reduct Vol:	0	0	0	0	0	0	0	0	0	0	0	0
Reduced Vol:	62	1451	32	18	994	62	101	15	80	33	39	27
PCE Adj:	1.00	1.00	1.00	1.00	1.00	1.00	1.00	1.00	1.00	1.00	1.00	1.00
MLF Adj:	1.00	1.00	1.00	1.00	1.00	1.00	1.00	1.00	1.00	1.00	1.00	1.00
FinalVolume:	62	1451	32	18	994	62	101	15	80	33	39	27
Saturation Flow Module:												
Sat/Lane:	1700	1700	1700	1700	1700	1700	1700	1700	1700	1700	1700	1700
Adjustment:	1.00	1.00	1.00	1.00	1.00	1.00	1.00	1.00	1.00	1.00	1.00	1.00
Lanes:	1.00	2.94	0.06	1.00	2.82	0.18	0.51	0.08	0.41	0.33	0.40	0.27
Final Sat.:	1700	4990	110	1700	4801	299	876	130	694	567	670	464
Capacity Analysis Module:												
Vol/Sat:	0.04	0.29	0.29	0.01	0.21	0.21	0.06	0.12	0.12	0.02	0.06	0.06
Crit Moves:		****		****				****		****		

Level Of Service Computation Report
ICU 1(Loss as Cycle Length %) Method (Future Volume Alternative)

Intersection #4 Main Street/Stewart Drive-Culver Avenue

Cycle (sec):	100	Critical Vol./Cap.(X):	0.500
Loss Time (sec):	5	Average Delay (sec/veh):	xxxxxx
Optimal Cycle:	24	Level Of Service:	A

Street Name:	Main Street						W. Stewart Drive-W. Culver Street					
Approach:	North Bound			South Bound			East Bound			West Bound		
Movement:	L	T	R	L	T	R	L	T	R	L	T	R
Control:	Protected			Protected			Prot+Permit			Prot+Permit		
Rights:	Include			Include			Include			Include		
Min. Green:	0	0	0	0	0	0	0	0	0	0	0	0
Y+R:	4.0	4.0	4.0	4.0	4.0	4.0	4.0	4.0	4.0	4.0	4.0	4.0
Lanes:	1 0	2	1 0	1 0	2	1 0	1 0	1	0 1	1 0	1!	0 0
Volume Module:												
Base Vol:	105	1316	74	46	956	64	94	11	79	209	35	81
Growth Adj:	1.00	1.00	1.00	1.00	1.00	1.00	1.00	1.00	1.00	1.00	1.00	1.00
Initial Bse:	105	1316	74	46	956	64	94	11	79	209	35	81
Added Vol:	0	0	0	0	0	0	0	0	0	0	0	0
PasserByVol:	0	0	0	0	0	0	0	0	0	0	0	0
Initial Fut:	105	1316	74	46	956	64	94	11	79	209	35	81
User Adj:	1.00	1.00	1.00	1.00	1.00	1.00	1.00	1.00	1.00	1.00	1.00	1.00
PHF Adj:	1.00	1.00	1.00	1.00	1.00	1.00	1.00	1.00	1.00	1.00	1.00	1.00
PHF Volume:	105	1316	74	46	956	64	94	11	79	209	35	81
Reduct Vol:	0	0	0	0	0	0	0	0	0	0	0	0
Reduced Vol:	105	1316	74	46	956	64	94	11	79	209	35	81
PCE Adj:	1.00	1.00	1.00	1.00	1.00	1.00	1.00	1.00	1.00	1.00	1.00	1.00
MLF Adj:	1.00	1.00	1.00	1.00	1.00	1.00	1.00	1.00	1.00	1.00	1.00	1.00
FinalVolume:	105	1316	74	46	956	64	94	11	79	209	35	81
Saturation Flow Module:												
Sat/Lane:	1700	1700	1700	1700	1700	1700	1700	1700	1700	1700	1700	1700
Adjustment:	1.00	1.00	1.00	1.00	1.00	1.00	1.00	1.00	1.00	1.00	1.00	1.00
Lanes:	1.00	2.84	0.16	1.00	2.81	0.19	1.00	1.00	1.00	1.29	0.21	0.50
Final Sat.:	1700	4828	272	1700	4780	320	1700	1700	1700	2186	366	847
Capacity Analysis Module:												
Vol/Sat:	0.06	0.27	0.27	0.03	0.20	0.20	0.06	0.01	0.05	0.10	0.10	0.10
Crit Moves:		****			****			****			****	

Level Of Service Computation Report
ICU 1(Loss as Cycle Length %) Method (Future Volume Alternative)

Intersection #5 Main Street/La Veta Avenue

Cycle (sec):	100	Critical Vol./Cap.(X):	0.591
Loss Time (sec):	5	Average Delay (sec/veh):	xxxxxx
Optimal Cycle:	28	Level Of Service:	A

Street Name:	Main Street						La Veta Avenue					
Approach:	North Bound			South Bound			East Bound			West Bound		
Movement:	L	T	R	L	T	R	L	T	R	L	T	R
Control:	Protected			Protected			Protected			Protected		
Rights:	Include			Include			Include			Include		
Min. Green:	0	0	0	0	0	0	0	0	0	0	0	0
Y+R:	4.0	4.0	4.0	4.0	4.0	4.0	4.0	4.0	4.0	4.0	4.0	4.0
Lanes:	2	0 3	0 1	2	0 2	1 0	2	0 2	1 0	2	0 2	0 1
Volume Module:												
Base Vol:	298	956	425	152	877	219	270	498	214	337	436	176
Growth Adj:	1.00	1.00	1.00	1.00	1.00	1.00	1.00	1.00	1.00	1.00	1.00	1.00
Initial Bse:	298	956	425	152	877	219	270	498	214	337	436	176
Added Vol:	0	0	0	0	0	0	0	0	0	0	0	0
PasserByVol:	0	0	0	0	0	0	0	0	0	0	0	0
Initial Fut:	298	956	425	152	877	219	270	498	214	337	436	176
User Adj:	1.00	1.00	1.00	1.00	1.00	1.00	1.00	1.00	1.00	1.00	1.00	1.00
PHF Adj:	1.00	1.00	1.00	1.00	1.00	1.00	1.00	1.00	1.00	1.00	1.00	1.00
PHF Volume:	298	956	425	152	877	219	270	498	214	337	436	176
Reduct Vol:	0	0	0	0	0	0	0	0	0	0	0	0
Reduced Vol:	298	956	425	152	877	219	270	498	214	337	436	176
PCE Adj:	1.00	1.00	1.00	1.00	1.00	1.00	1.00	1.00	1.00	1.00	1.00	1.00
MLF Adj:	1.00	1.00	1.00	1.00	1.00	1.00	1.00	1.00	1.00	1.00	1.00	1.00
FinalVolume:	298	956	425	152	877	219	270	498	214	337	436	176
Saturation Flow Module:												
Sat/Lane:	1700	1700	1700	1700	1700	1700	1700	1700	1700	1700	1700	1700
Adjustment:	1.00	1.00	1.00	1.00	1.00	1.00	1.00	1.00	1.00	1.00	1.00	1.00
Lanes:	2.00	3.00	1.00	2.00	2.40	0.60	2.00	2.10	0.90	2.00	2.00	1.00
Final Sat.:	3400	5100	1700	3400	4081	1019	3400	3567	1533	3400	3400	1700
Capacity Analysis Module:												
Vol/Sat:	0.09	0.19	0.25	0.04	0.21	0.21	0.08	0.14	0.14	0.10	0.13	0.10
Crit Moves:	****			****			****			****		

Level Of Service Computation Report
ICU 1(Loss as Cycle Length %) Method (Future Volume Alternative)

Intersection #1 Main Street/Almond Avenue

Cycle (sec):	100	Critical Vol./Cap.(X):	0.522
Loss Time (sec):	5	Average Delay (sec/veh):	xxxxxx
Optimal Cycle:	25	Level Of Service:	A

Street Name:	Main Street						W. Almond Avenue					
Approach:	North Bound			South Bound			East Bound			West Bound		
Movement:	L	T	R	L	T	R	L	T	R	L	T	R
Control:	Protected			Protected			Permitted			Permitted		
Rights:	Include			Include			Include			Include		
Min. Green:	0	0	0	0	0	0	0	0	0	0	0	0
Y+R:	4.0	4.0	4.0	4.0	4.0	4.0	4.0	4.0	4.0	4.0	4.0	4.0
Lanes:	1 0	3 0	1	1 0	2 1	0	1 0	0 1	0	1 0	0 1	0
Volume Module:												
Base Vol:	17	716	86	72	1476	15	12	113	37	105	72	100
Growth Adj:	1.00	1.00	1.00	1.00	1.00	1.00	1.00	1.00	1.00	1.00	1.00	1.00
Initial Bse:	17	716	86	72	1476	15	12	113	37	105	72	100
Added Vol:	0	27	0	0	100	0	0	0	0	0	0	0
PasserByVol:	0	0	0	0	0	0	0	0	0	0	0	0
Initial Fut:	17	743	86	72	1576	15	12	113	37	105	72	100
User Adj:	1.00	1.00	1.00	1.00	1.00	1.00	1.00	1.00	1.00	1.00	1.00	1.00
PHF Adj:	1.00	1.00	1.00	1.00	1.00	1.00	1.00	1.00	1.00	1.00	1.00	1.00
PHF Volume:	17	743	86	72	1576	15	12	113	37	105	72	100
Reduct Vol:	0	0	0	0	0	0	0	0	0	0	0	0
Reduced Vol:	17	743	86	72	1576	15	12	113	37	105	72	100
PCE Adj:	1.00	1.00	1.00	1.00	1.00	1.00	1.00	1.00	1.00	1.00	1.00	1.00
MLF Adj:	1.00	1.00	1.00	1.00	1.00	1.00	1.00	1.00	1.00	1.00	1.00	1.00
FinalVolume:	17	743	86	72	1576	15	12	113	37	105	72	100
Saturation Flow Module:												
Sat/Lane:	1700	1700	1700	1700	1700	1700	1700	1700	1700	1700	1700	1700
Adjustment:	1.00	1.00	1.00	1.00	1.00	1.00	1.00	1.00	1.00	1.00	1.00	1.00
Lanes:	1.00	3.00	1.00	1.00	2.97	0.03	1.00	0.75	0.25	1.00	0.42	0.58
Final Sat.:	1700	5100	1700	1700	5052	48	1700	1281	419	1700	712	988
Capacity Analysis Module:												
Vol/Sat:	0.01	0.15	0.05	0.04	0.31	0.31	0.01	0.09	0.09	0.06	0.10	0.10
Crit Moves:	****			****			****			****		

Level Of Service Computation Report
ICU 1(Loss as Cycle Length %) Method (Future Volume Alternative)

Intersection #2 Main Street/Palmyra Avenue

Cycle (sec):	100	Critical Vol./Cap.(X):	0.567
Loss Time (sec):	5	Average Delay (sec/veh):	xxxxxx
Optimal Cycle:	27	Level Of Service:	A

Street Name:	Main Street						W. Palmyra Avenue					
Approach:	North Bound			South Bound			East Bound			West Bound		
Movement:	L	T	R	L	T	R	L	T	R	L	T	R
Control:	Protected			Protected			Permitted			Permitted		
Rights:	Include			Include			Include			Include		
Min. Green:	0	0	0	0	0	0	0	0	0	0	0	0
Y+R:	4.0	4.0	4.0	4.0	4.0	4.0	4.0	4.0	4.0	4.0	4.0	4.0
Lanes:	1 0	2	1 0	1 0	2	1 0	0 0	1!	0 0	0 0	1!	0 0
Volume Module:												
Base Vol:	82	757	23	16	1390	62	95	31	92	17	24	20
Growth Adj:	1.00	1.00	1.00	1.00	1.00	1.00	1.00	1.00	1.00	1.00	1.00	1.00
Initial Bse:	82	757	23	16	1390	62	95	31	92	17	24	20
Added Vol:	20	27	0	0	100	0	0	0	0	20	0	0
Restribute:	0	0	0	0	0	0	0	0	0	4	0	0
Initial Fut:	102	784	23	16	1490	62	95	31	92	41	24	20
User Adj:	1.00	1.00	1.00	1.00	1.00	1.00	1.00	1.00	1.00	1.00	1.00	1.00
PHF Adj:	1.00	1.00	1.00	1.00	1.00	1.00	1.00	1.00	1.00	1.00	1.00	1.00
PHF Volume:	102	784	23	16	1490	62	95	31	92	41	24	20
Reduct Vol:	0	0	0	0	0	0	0	0	0	0	0	0
Reduced Vol:	102	784	23	16	1490	62	95	31	92	41	24	20
PCE Adj:	1.00	1.00	1.00	1.00	1.00	1.00	1.00	1.00	1.00	1.00	1.00	1.00
MLF Adj:	1.00	1.00	1.00	1.00	1.00	1.00	1.00	1.00	1.00	1.00	1.00	1.00
FinalVolume:	102	784	23	16	1490	62	95	31	92	41	24	20
Saturation Flow Module:												
Sat/Lane:	1700	1700	1700	1700	1700	1700	1700	1700	1700	1700	1700	1700
Adjustment:	1.00	1.00	1.00	1.00	1.00	1.00	1.00	1.00	1.00	1.00	1.00	1.00
Lanes:	1.00	2.91	0.09	1.00	2.88	0.12	0.44	0.14	0.42	0.48	0.28	0.24
Final Sat.:	1700	4955	145	1700	4896	204	741	242	717	820	480	400
Capacity Analysis Module:												
Vol/Sat:	0.06	0.16	0.16	0.01	0.30	0.30	0.06	0.13	0.13	0.02	0.05	0.05
Crit Moves:	****			****			****			****		

Level Of Service Computation Report
ICU 1(Loss as Cycle Length %) Method (Future Volume Alternative)

Intersection #4 Main Street/Stewart Drive-Culver Avenue

Cycle (sec):	100	Critical Vol./Cap.(X):	0.467
Loss Time (sec):	5	Average Delay (sec/veh):	xxxxxx
Optimal Cycle:	22	Level Of Service:	A

Street Name:	Main Street						W. Stewart Drive-W. Culver Street					
Approach:	North Bound			South Bound			East Bound			West Bound		
Movement:	L	T	R	L	T	R	L	T	R	L	T	R
Control:	Protected			Protected			Prot+Permit			Prot+Permit		
Rights:	Include			Include			Include			Include		
Min. Green:	0	0	0	0	0	0	0	0	0	0	0	0
Y+R:	4.0	4.0	4.0	4.0	4.0	4.0	4.0	4.0	4.0	4.0	4.0	4.0
Lanes:	1 0	2	1 0	1 0	2	1 0	1 0	1	0 1	1 0	1!	0 0
Volume Module:												
Base Vol:	63	911	82	94	1281	41	51	10	115	89	3	45
Growth Adj:	1.00	1.00	1.00	1.00	1.00	1.00	1.00	1.00	1.00	1.00	1.00	1.00
Initial Bse:	63	911	82	94	1281	41	51	10	115	89	3	45
Added Vol:	0	151	0	0	31	0	0	0	10	0	0	0
Restribute:	0	0	0	0	4	0	0	0	0	0	0	0
Initial Fut:	63	1062	82	94	1316	41	51	10	125	89	3	45
User Adj:	1.00	1.00	1.00	1.00	1.00	1.00	1.00	1.00	1.00	1.00	1.00	1.00
PHF Adj:	1.00	1.00	1.00	1.00	1.00	1.00	1.00	1.00	1.00	1.00	1.00	1.00
PHF Volume:	63	1062	82	94	1316	41	51	10	125	89	3	45
Reduct Vol:	0	0	0	0	0	0	0	0	0	0	0	0
Reduced Vol:	63	1062	82	94	1316	41	51	10	125	89	3	45
PCE Adj:	1.00	1.00	1.00	1.00	1.00	1.00	1.00	1.00	1.00	1.00	1.00	1.00
MLF Adj:	1.00	1.00	1.00	1.00	1.00	1.00	1.00	1.00	1.00	1.00	1.00	1.00
FinalVolume:	63	1062	82	94	1316	41	51	10	125	89	3	45
Saturation Flow Module:												
Sat/Lane:	1700	1700	1700	1700	1700	1700	1700	1700	1700	1700	1700	1700
Adjustment:	1.00	1.00	1.00	1.00	1.00	1.00	1.00	1.00	1.00	1.00	1.00	1.00
Lanes:	1.00	2.78	0.22	1.00	2.91	0.09	1.00	1.00	1.00	1.30	0.04	0.66
Final Sat.:	1700	4734	366	1700	4946	154	1700	1700	1700	2209	74	1117
Capacity Analysis Module:												
Vol/Sat:	0.04	0.22	0.22	0.06	0.27	0.27	0.03	0.01	0.07	0.04	0.04	0.04
Crit Moves:	****			****					****	****		

Level Of Service Computation Report
ICU 1(Loss as Cycle Length %) Method (Future Volume Alternative)

Intersection #5 Main Street/La Veta Avenue

Cycle (sec):	100	Critical Vol./Cap.(X):	0.589
Loss Time (sec):	5	Average Delay (sec/veh):	xxxxxx
Optimal Cycle:	28	Level Of Service:	A

Street Name:	Main Street						La Veta Avenue					
Approach:	North Bound			South Bound			East Bound			West Bound		
Movement:	L	T	R	L	T	R	L	T	R	L	T	R
Control:	Protected			Protected			Protected			Protected		
Rights:	Include			Include			Include			Include		
Min. Green:	0	0	0	0	0	0	0	0	0	0	0	0
Y+R:	4.0	4.0	4.0	4.0	4.0	4.0	4.0	4.0	4.0	4.0	4.0	4.0
Lanes:	2 0	3 0	1	2 0	2 1	0	2 0	2 1	0	2 0	2 0	1
Volume Module:												
Base Vol:	84	570	282	187	1103	153	306	310	220	339	493	213
Growth Adj:	1.00	1.00	1.00	1.00	1.00	1.00	1.00	1.00	1.00	1.00	1.00	1.00
Initial Bse:	84	570	282	187	1103	153	306	310	220	339	493	213
Added Vol:	0	75	0	0	41	0	0	0	0	0	0	75
Restribute:	0	0	0	0	4	0	0	0	0	0	0	0
Initial Fut:	84	645	282	187	1148	153	306	310	220	339	493	288
User Adj:	1.00	1.00	1.00	1.00	1.00	1.00	1.00	1.00	1.00	1.00	1.00	1.00
PHF Adj:	1.00	1.00	1.00	1.00	1.00	1.00	1.00	1.00	1.00	1.00	1.00	1.00
PHF Volume:	84	645	282	187	1148	153	306	310	220	339	493	288
Reduct Vol:	0	0	0	0	0	0	0	0	0	0	0	0
Reduced Vol:	84	645	282	187	1148	153	306	310	220	339	493	288
PCE Adj:	1.00	1.00	1.00	1.00	1.00	1.00	1.00	1.00	1.00	1.00	1.00	1.00
MLF Adj:	1.00	1.00	1.00	1.00	1.00	1.00	1.00	1.00	1.00	1.00	1.00	1.00
FinalVolume:	84	645	282	187	1148	153	306	310	220	339	493	288
Saturation Flow Module:												
Sat/Lane:	1700	1700	1700	1700	1700	1700	1700	1700	1700	1700	1700	1700
Adjustment:	1.00	1.00	1.00	1.00	1.00	1.00	1.00	1.00	1.00	1.00	1.00	1.00
Lanes:	2.00	3.00	1.00	2.00	2.65	0.35	2.00	2.00	1.00	2.00	2.00	1.00
Final Sat.:	3400	5100	1700	3400	4500	600	3400	3400	1700	3400	3400	1700
Capacity Analysis Module:												
Vol/Sat:	0.02	0.13	0.17	0.06	0.26	0.26	0.09	0.09	0.13	0.10	0.15	0.17
Crit Moves:	****			****			****					****

Level Of Service Computation Report
ICU 1(Loss as Cycle Length %) Method (Future Volume Alternative)

Intersection #1 Main Street/Almond Avenue

Cycle (sec):	100	Critical Vol./Cap.(X):	0.510
Loss Time (sec):	5	Average Delay (sec/veh):	xxxxxx
Optimal Cycle:	24	Level Of Service:	A

Street Name:	Main Street						W. Almond Avenue					
Approach:	North Bound			South Bound			East Bound			West Bound		
Movement:	L	T	R	L	T	R	L	T	R	L	T	R
Control:	Protected			Protected			Permitted			Permitted		
Rights:	Include			Include			Include			Include		
Min. Green:	0	0	0	0	0	0	0	0	0	0	0	0
Y+R:	4.0	4.0	4.0	4.0	4.0	4.0	4.0	4.0	4.0	4.0	4.0	4.0
Lanes:	1 0	3 0	1	1 0	2 1	0	1 0	0 1	0	1 0	0 1	0
Volume Module:												
Base Vol:	37	1440	111	45	982	37	16	55	31	76	108	94
Growth Adj:	1.00	1.00	1.00	1.00	1.00	1.00	1.00	1.00	1.00	1.00	1.00	1.00
Initial Bse:	37	1440	111	45	982	37	16	55	31	76	108	94
Added Vol:	0	115	0	0	44	0	0	0	0	0	0	0
PasserByVol:	0	0	0	0	0	0	0	0	0	0	0	0
Initial Fut:	37	1555	111	45	1026	37	16	55	31	76	108	94
User Adj:	1.00	1.00	1.00	1.00	1.00	1.00	1.00	1.00	1.00	1.00	1.00	1.00
PHF Adj:	1.00	1.00	1.00	1.00	1.00	1.00	1.00	1.00	1.00	1.00	1.00	1.00
PHF Volume:	37	1555	111	45	1026	37	16	55	31	76	108	94
Reduct Vol:	0	0	0	0	0	0	0	0	0	0	0	0
Reduced Vol:	37	1555	111	45	1026	37	16	55	31	76	108	94
PCE Adj:	1.00	1.00	1.00	1.00	1.00	1.00	1.00	1.00	1.00	1.00	1.00	1.00
MLF Adj:	1.00	1.00	1.00	1.00	1.00	1.00	1.00	1.00	1.00	1.00	1.00	1.00
FinalVolume:	37	1555	111	45	1026	37	16	55	31	76	108	94
Saturation Flow Module:												
Sat/Lane:	1700	1700	1700	1700	1700	1700	1700	1700	1700	1700	1700	1700
Adjustment:	1.00	1.00	1.00	1.00	1.00	1.00	1.00	1.00	1.00	1.00	1.00	1.00
Lanes:	1.00	3.00	1.00	1.00	2.90	0.10	1.00	0.64	0.36	1.00	0.53	0.47
Final Sat.:	1700	5100	1700	1700	4922	178	1700	1087	613	1700	909	791
Capacity Analysis Module:												
Vol/Sat:	0.02	0.30	0.07	0.03	0.21	0.21	0.01	0.05	0.05	0.04	0.12	0.12
Crit Moves:		****			****			****			****	

Level Of Service Computation Report
ICU 1(Loss as Cycle Length %) Method (Future Volume Alternative)

Intersection #2 Main Street/Palmyra Avenue

Cycle (sec):	100	Critical Vol./Cap.(X):	0.573
Loss Time (sec):	5	Average Delay (sec/veh):	xxxxxx
Optimal Cycle:	27	Level Of Service:	A

Street Name:	Main Street						W. Palmyra Avenue					
Approach:	North Bound			South Bound			East Bound			West Bound		
Movement:	L	T	R	L	T	R	L	T	R	L	T	R
Control:	Protected			Protected			Permitted			Permitted		
Rights:	Include			Include			Include			Include		
Min. Green:	0	0	0	0	0	0	0	0	0	0	0	0
Y+R:	4.0	4.0	4.0	4.0	4.0	4.0	4.0	4.0	4.0	4.0	4.0	4.0
Lanes:	1 0	2	1 0	1 0	2	1 0	0 0	1!	0 0	0 0	1!	0 0
Volume Module:												
Base Vol:	62	1451	32	18	994	62	101	15	80	33	39	27
Growth Adj:	1.00	1.00	1.00	1.00	1.00	1.00	1.00	1.00	1.00	1.00	1.00	1.00
Initial Bse:	62	1451	32	18	994	62	101	15	80	33	39	27
Added Vol:	86	115	0	0	44	0	0	0	0	86	0	0
Restribute:	0	0	0	0	0	0	0	0	0	24	0	0
Initial Fut:	148	1566	32	18	1038	62	101	15	80	143	39	27
User Adj:	1.00	1.00	1.00	1.00	1.00	1.00	1.00	1.00	1.00	1.00	1.00	1.00
PHF Adj:	1.00	1.00	1.00	1.00	1.00	1.00	1.00	1.00	1.00	1.00	1.00	1.00
PHF Volume:	148	1566	32	18	1038	62	101	15	80	143	39	27
Reduct Vol:	0	0	0	0	0	0	0	0	0	0	0	0
Reduced Vol:	148	1566	32	18	1038	62	101	15	80	143	39	27
PCE Adj:	1.00	1.00	1.00	1.00	1.00	1.00	1.00	1.00	1.00	1.00	1.00	1.00
MLF Adj:	1.00	1.00	1.00	1.00	1.00	1.00	1.00	1.00	1.00	1.00	1.00	1.00
FinalVolume:	148	1566	32	18	1038	62	101	15	80	143	39	27
Saturation Flow Module:												
Sat/Lane:	1700	1700	1700	1700	1700	1700	1700	1700	1700	1700	1700	1700
Adjustment:	1.00	1.00	1.00	1.00	1.00	1.00	1.00	1.00	1.00	1.00	1.00	1.00
Lanes:	1.00	2.94	0.06	1.00	2.83	0.17	0.51	0.08	0.41	0.68	0.19	0.13
Final Sat.:	1700	4998	102	1700	4813	287	876	130	694	1163	317	220
Capacity Analysis Module:												
Vol/Sat:	0.09	0.31	0.31	0.01	0.22	0.22	0.06	0.12	0.12	0.08	0.12	0.12
Crit Moves:		****		****				****		****		

Level Of Service Computation Report
ICU 1(Loss as Cycle Length %) Method (Future Volume Alternative)

Intersection #4 Main Street/Stewart Drive-Culver Avenue

Cycle (sec):	100	Critical Vol./Cap.(X):	0.530
Loss Time (sec):	5	Average Delay (sec/veh):	xxxxxx
Optimal Cycle:	25	Level Of Service:	A

Street Name:	Main Street						W. Stewart Drive-W. Culver Street					
Approach:	North Bound			South Bound			East Bound			West Bound		
Movement:	L	T	R	L	T	R	L	T	R	L	T	R
Control:	Protected			Protected			Prot+Permit			Prot+Permit		
Rights:	Include			Include			Include			Include		
Min. Green:	0	0	0	0	0	0	0	0	0	0	0	0
Y+R:	4.0	4.0	4.0	4.0	4.0	4.0	4.0	4.0	4.0	4.0	4.0	4.0
Lanes:	1 0	2	1 0	1 0	2	1 0	1 0	1	0 1	1 0	1!	0 0
Volume Module:												
Base Vol:	105	1316	74	46	956	64	94	11	79	209	35	81
Growth Adj:	1.00	1.00	1.00	1.00	1.00	1.00	1.00	1.00	1.00	1.00	1.00	1.00
Initial Bse:	105	1316	74	46	956	64	94	11	79	209	35	81
Added Vol:	0	66	0	0	130	0	0	0	43	0	0	0
Restribute:	0	0	0	0	24	0	0	0	0	0	0	0
Initial Fut:	105	1382	74	46	1110	64	94	11	122	209	35	81
User Adj:	1.00	1.00	1.00	1.00	1.00	1.00	1.00	1.00	1.00	1.00	1.00	1.00
PHF Adj:	1.00	1.00	1.00	1.00	1.00	1.00	1.00	1.00	1.00	1.00	1.00	1.00
PHF Volume:	105	1382	74	46	1110	64	94	11	122	209	35	81
Reduct Vol:	0	0	0	0	0	0	0	0	0	0	0	0
Reduced Vol:	105	1382	74	46	1110	64	94	11	122	209	35	81
PCE Adj:	1.00	1.00	1.00	1.00	1.00	1.00	1.00	1.00	1.00	1.00	1.00	1.00
MLF Adj:	1.00	1.00	1.00	1.00	1.00	1.00	1.00	1.00	1.00	1.00	1.00	1.00
FinalVolume:	105	1382	74	46	1110	64	94	11	122	209	35	81
Saturation Flow Module:												
Sat/Lane:	1700	1700	1700	1700	1700	1700	1700	1700	1700	1700	1700	1700
Adjustment:	1.00	1.00	1.00	1.00	1.00	1.00	1.00	1.00	1.00	1.00	1.00	1.00
Lanes:	1.00	2.85	0.15	1.00	2.84	0.16	1.00	1.00	1.00	1.29	0.21	0.50
Final Sat.:	1700	4841	259	1700	4822	278	1700	1700	1700	2186	366	847
Capacity Analysis Module:												
Vol/Sat:	0.06	0.29	0.29	0.03	0.23	0.23	0.06	0.01	0.07	0.10	0.10	0.10
Crit Moves:		****		****					****	****		

Traffix 8.0.0715 (c) 2008 Dowling Assoc. Licensed to LSA ASSOC. IRVINE, CA

Level Of Service Computation Report
ICU 1(Loss as Cycle Length %) Method (Future Volume Alternative)

Intersection #5 Main Street/La Veta Avenue

Cycle (sec):	100	Critical Vol./Cap.(X):	0.630
Loss Time (sec):	5	Average Delay (sec/veh):	xxxxxx
Optimal Cycle:	31	Level Of Service:	B

Street Name:	Main Street						La Veta Avenue					
Approach:	North Bound			South Bound			East Bound			West Bound		
Movement:	L	T	R	L	T	R	L	T	R	L	T	R
Control:	Protected			Protected			Protected			Protected		
Rights:	Include			Include			Include			Include		
Min. Green:	0	0	0	0	0	0	0	0	0	0	0	0
Y+R:	4.0	4.0	4.0	4.0	4.0	4.0	4.0	4.0	4.0	4.0	4.0	4.0
Lanes:	2 0	3 0	1	2 0	2 1	0	2 0	2 1	0	2 0	2 0	1
Volume Module:												
Base Vol:	298	956	425	152	877	219	270	498	214	337	436	176
Growth Adj:	1.00	1.00	1.00	1.00	1.00	1.00	1.00	1.00	1.00	1.00	1.00	1.00
Initial Bse:	298	956	425	152	877	219	270	498	214	337	436	176
Added Vol:	0	33	0	0	173	0	0	0	0	0	0	33
Restribute:	0	0	0	0	24	0	0	0	0	0	0	0
Initial Fut:	298	989	425	152	1074	219	270	498	214	337	436	209
User Adj:	1.00	1.00	1.00	1.00	1.00	1.00	1.00	1.00	1.00	1.00	1.00	1.00
PHF Adj:	1.00	1.00	1.00	1.00	1.00	1.00	1.00	1.00	1.00	1.00	1.00	1.00
PHF Volume:	298	989	425	152	1074	219	270	498	214	337	436	209
Reduct Vol:	0	0	0	0	0	0	0	0	0	0	0	0
Reduced Vol:	298	989	425	152	1074	219	270	498	214	337	436	209
PCE Adj:	1.00	1.00	1.00	1.00	1.00	1.00	1.00	1.00	1.00	1.00	1.00	1.00
MLF Adj:	1.00	1.00	1.00	1.00	1.00	1.00	1.00	1.00	1.00	1.00	1.00	1.00
FinalVolume:	298	989	425	152	1074	219	270	498	214	337	436	209
Saturation Flow Module:												
Sat/Lane:	1700	1700	1700	1700	1700	1700	1700	1700	1700	1700	1700	1700
Adjustment:	1.00	1.00	1.00	1.00	1.00	1.00	1.00	1.00	1.00	1.00	1.00	1.00
Lanes:	2.00	3.00	1.00	2.00	2.49	0.51	2.00	2.10	0.90	2.00	2.00	1.00
Final Sat.:	3400	5100	1700	3400	4236	864	3400	3567	1533	3400	3400	1700
Capacity Analysis Module:												
Vol/Sat:	0.09	0.19	0.25	0.04	0.25	0.25	0.08	0.14	0.14	0.10	0.13	0.12
Crit Moves:	****			****			****			****		

APPENDIX C

HCM LEVEL OF SERVICE WORKSHEETS

Intersection	
Int Delay, s/veh	5.6

Movement	EBL	EBT	EBR	WBL	WBT	WBR	NBL	NBT	NBR	SBL	SBT	SBR
Lane Configurations												
Traffic Vol, veh/h	0	0	61	0	0	10	171	807	29	100	1424	16
Future Vol, veh/h	0	0	61	0	0	10	171	807	29	100	1424	16
Conflicting Peds, #/hr	0	0	0	0	0	0	0	0	0	0	0	0
Sign Control	Stop	Stop	Stop	Stop	Stop	Stop	Free	Free	Free	Free	Free	Free
RT Channelized	-	-	None	-	-	None	-	-	None	-	-	None
Storage Length	-	-	-	-	-	0	75	-	0	50	-	-
Veh in Median Storage, #	-	0	-	-	0	-	-	0	-	-	0	-
Grade, %	-	0	-	-	0	-	-	0	-	-	0	-
Peak Hour Factor	95	95	95	95	95	95	95	95	95	95	95	95
Heavy Vehicles, %	2	2	2	2	2	2	2	2	2	2	2	2
Mvmt Flow	0	0	64	0	0	11	180	849	31	105	1499	17

Major/Minor	Minor2			Minor1			Major1			Major2		
Conflicting Flow All	2418	2958	758	-	-	425	1516	0	0	880	0	0
Stage 1	1718	1718	-	-	-	-	-	-	-	-	-	-
Stage 2	700	1240	-	-	-	-	-	-	-	-	-	-
Critical Hdwy	6.44	6.54	7.14	-	-	7.14	5.34	-	-	5.34	-	-
Critical Hdwy Stg 1	7.34	5.54	-	-	-	-	-	-	-	-	-	-
Critical Hdwy Stg 2	6.74	5.54	-	-	-	-	-	-	-	-	-	-
Follow-up Hdwy	3.82	4.02	3.92	-	-	3.92	3.12	-	-	3.12	-	-
Pot Cap-1 Maneuver	35	14	300	0	0	494	219	-	-	447	-	-
Stage 1	62	143	-	0	0	-	-	-	-	-	-	-
Stage 2	360	245	-	0	0	-	-	-	-	-	-	-
Platoon blocked, %								-	-		-	-
Mov Cap-1 Maneuver	9	2	300	-	-	494	219	-	-	447	-	-
Mov Cap-2 Maneuver	9	2	-	-	-	-	-	-	-	-	-	-
Stage 1	11	109	-	-	-	-	-	-	-	-	-	-
Stage 2	63	44	-	-	-	-	-	-	-	-	-	-

Approach	EB	WB	NB	SB
HCM Control Delay, s	20.2	12.4	11.7	1
HCM LOS	C	B		

Minor Lane/Major Mvmt	NBL	NBT	NBR	EBLn1	WBLn1	SBL	SBT	SBR
Capacity (veh/h)	219	-	-	300	494	447	-	-
HCM Lane V/C Ratio	0.822	-	-	0.214	0.021	0.235	-	-
HCM Control Delay (s)	69	-	-	20.2	12.4	15.5	-	-
HCM Lane LOS	F	-	-	C	B	C	-	-
HCM 95th %tile Q(veh)	6.1	-	-	0.8	0.1	0.9	-	-

Intersection	
Int Delay, s/veh	1.2

Movement	EBL	EBT	EBR	WBL	WBT	WBR	NBL	NBT	NBR	SBL	SBT	SBR
Lane Configurations												
Traffic Vol, veh/h	5	0	104	0	0	8	24	1440	13	13	1084	16
Future Vol, veh/h	5	0	104	0	0	8	24	1440	13	13	1084	16
Conflicting Peds, #/hr	0	0	0	0	0	0	0	0	0	0	0	0
Sign Control	Stop	Stop	Stop	Stop	Stop	Stop	Free	Free	Free	Free	Free	Free
RT Channelized	-	-	None	-	-	None	-	-	None	-	-	None
Storage Length	-	-	-	-	-	0	75	-	0	50	-	-
Veh in Median Storage, #	-	0	-	-	0	-	-	0	-	-	0	-
Grade, %	-	0	-	-	0	-	-	0	-	-	0	-
Peak Hour Factor	95	95	95	95	95	95	95	95	95	95	95	95
Heavy Vehicles, %	2	2	2	2	2	2	2	2	2	2	2	2
Mvmt Flow	5	0	109	0	0	8	25	1516	14	14	1141	17

Major/Minor	Minor2			Minor1			Major1			Major2		
Conflicting Flow All	1834	2758	579	-	-	758	1158	0	0	1530	0	0
Stage 1	1178	1178	-	-	-	-	-	-	-	-	-	-
Stage 2	656	1580	-	-	-	-	-	-	-	-	-	-
Critical Hdwy	6.44	6.54	7.14	-	-	7.14	5.34	-	-	5.34	-	-
Critical Hdwy Stg 1	7.34	5.54	-	-	-	-	-	-	-	-	-	-
Critical Hdwy Stg 2	6.74	5.54	-	-	-	-	-	-	-	-	-	-
Follow-up Hdwy	3.82	4.02	3.92	-	-	3.92	3.12	-	-	3.12	-	-
Pot Cap-1 Maneuver	80	19	393	0	0	300	328	-	-	215	-	-
Stage 1	150	263	-	0	0	-	-	-	-	-	-	-
Stage 2	383	168	-	0	0	-	-	-	-	-	-	-
Platoon blocked, %								-	-		-	-
Mov Cap-1 Maneuver	70	16	393	-	-	300	328	-	-	215	-	-
Mov Cap-2 Maneuver	70	16	-	-	-	-	-	-	-	-	-	-
Stage 1	139	246	-	-	-	-	-	-	-	-	-	-
Stage 2	344	155	-	-	-	-	-	-	-	-	-	-

Approach	EB	WB	NB	SB
HCM Control Delay, s	22.1	17.3	0.3	0.3
HCM LOS	C	C		

Minor Lane/Major Mvmt	NBL	NBT	NBR	EBLn1	WBLn1	SBL	SBT	SBR
Capacity (veh/h)	328	-	-	324	300	215	-	-
HCM Lane V/C Ratio	0.077	-	-	0.354	0.028	0.064	-	-
HCM Control Delay (s)	16.9	-	-	22.1	17.3	22.9	-	-
HCM Lane LOS	C	-	-	C	C	C	-	-
HCM 95th %tile Q(veh)	0.2	-	-	1.6	0.1	0.2	-	-

Intersection	
Int Delay, s/veh	2.3

Movement	EBL	EBT	EBR	WBL	WBT	WBR	NBL	NBT	NBR	SBL	SBT	SBR
Lane Configurations												
Traffic Vol, veh/h	13	53	0	14	49	4	8	0	4	1	0	3
Future Vol, veh/h	13	53	0	14	49	4	8	0	4	1	0	3
Conflicting Peds, #/hr	0	0	0	0	0	0	0	0	0	0	0	0
Sign Control	Free	Free	Free	Free	Free	Free	Stop	Stop	Stop	Stop	Stop	Stop
RT Channelized	-	-	None	-	-	None	-	-	None	-	-	None
Storage Length	-	-	-	-	-	-	0	-	-	-	-	-
Veh in Median Storage, #	-	0	-	-	0	-	-	0	-	-	0	-
Grade, %	-	0	-	-	0	-	-	0	-	-	0	-
Peak Hour Factor	95	95	95	95	95	95	95	95	95	95	95	95
Heavy Vehicles, %	2	2	2	2	2	2	2	2	2	2	2	2
Mvmt Flow	14	56	0	15	52	4	8	0	4	1	0	3

Major/Minor	Major1			Major2			Minor1			Minor2		
Conflicting Flow All	56	0	-	56	0	0	170	-	56	170	168	54
Stage 1	-	-	-	-	-	-	84	-	-	84	84	-
Stage 2	-	-	-	-	-	-	86	-	-	86	84	-
Critical Hdwy	4.12	-	-	4.12	-	-	7.12	-	6.22	7.12	6.52	6.22
Critical Hdwy Stg 1	-	-	-	-	-	-	6.12	-	-	6.12	5.52	-
Critical Hdwy Stg 2	-	-	-	-	-	-	6.12	-	-	6.12	5.52	-
Follow-up Hdwy	2.218	-	-	2.218	-	-	3.518	-	3.318	3.518	4.018	3.318
Pot Cap-1 Maneuver	1549	-	0	1549	-	-	794	0	1011	794	725	1013
Stage 1	-	-	0	-	-	-	924	0	-	924	825	-
Stage 2	-	-	0	-	-	-	922	0	-	922	825	-
Platoon blocked, %		-			-	-						
Mov Cap-1 Maneuver	1549	-	-	1549	-	-	780	-	1011	779	711	1013
Mov Cap-2 Maneuver	-	-	-	-	-	-	780	-	-	779	711	-
Stage 1	-	-	-	-	-	-	916	-	-	916	817	-
Stage 2	-	-	-	-	-	-	910	-	-	910	818	-

Approach	EB	WB	NB	SB
HCM Control Delay, s	1.4	1.5	9.3	8.8
HCM LOS			A	A

Minor Lane/Major Mvmt	NBLn1	EBL	EBT	WBL	WBT	WBR	SBLn1
Capacity (veh/h)	844	1549	-	1549	-	-	942
HCM Lane V/C Ratio	0.015	0.009	-	0.01	-	-	0.004
HCM Control Delay (s)	9.3	7.3	0	7.3	-	-	8.8
HCM Lane LOS	A	A	A	A	-	-	A
HCM 95th %tile Q(veh)	0	0	-	0	-	-	0

Intersection	
Int Delay, s/veh	3.8

Movement	EBL	EBT	EBR	WBL	WBT	WBR	NBL	NBT	NBR	SBL	SBT	SBR
Lane Configurations												
Traffic Vol, veh/h	2	65	0	2	47	0	38	1	24	2	0	11
Future Vol, veh/h	2	65	0	2	47	0	38	1	24	2	0	11
Conflicting Peds, #/hr	0	0	0	0	0	0	0	0	0	0	0	0
Sign Control	Free	Free	Free	Free	Free	Free	Stop	Stop	Stop	Stop	Stop	Stop
RT Channelized	-	-	None	-	-	None	-	-	None	-	-	None
Storage Length	-	-	-	-	-	-	0	-	-	-	-	-
Veh in Median Storage, #	-	0	-	-	0	-	-	0	-	-	0	-
Grade, %	-	0	-	-	0	-	-	0	-	-	0	-
Peak Hour Factor	95	95	95	95	95	95	95	95	95	95	95	95
Heavy Vehicles, %	2	2	2	2	2	2	2	2	2	2	2	2
Mvmt Flow	2	68	0	2	49	0	40	1	25	2	0	12

Major/Minor	Major1			Major2			Minor1			Minor2		
Conflicting Flow All	49	0	-	68	0	0	131	125	68	138	125	49
Stage 1	-	-	-	-	-	-	72	72	-	53	53	-
Stage 2	-	-	-	-	-	-	59	53	-	85	72	-
Critical Hdwy	4.12	-	-	4.12	-	-	7.12	6.52	6.22	7.12	6.52	6.22
Critical Hdwy Stg 1	-	-	-	-	-	-	6.12	5.52	-	6.12	5.52	-
Critical Hdwy Stg 2	-	-	-	-	-	-	6.12	5.52	-	6.12	5.52	-
Follow-up Hdwy	2.218	-	-	2.218	-	-	3.518	4.018	3.318	3.518	4.018	3.318
Pot Cap-1 Maneuver	1558	-	0	1533	-	-	841	765	995	833	765	1020
Stage 1	-	-	0	-	-	-	938	835	-	960	851	-
Stage 2	-	-	0	-	-	-	953	851	-	923	835	-
Platoon blocked, %		-			-	-						
Mov Cap-1 Maneuver	1558	-	-	1533	-	-	830	763	995	810	763	1020
Mov Cap-2 Maneuver	-	-	-	-	-	-	830	763	-	810	763	-
Stage 1	-	-	-	-	-	-	937	834	-	959	850	-
Stage 2	-	-	-	-	-	-	941	850	-	898	834	-

Approach	EB	WB	NB	SB
HCM Control Delay, s	0.2	0.3	9.4	8.7
HCM LOS			A	A

Minor Lane/Major Mvmt	NBLn1	EBL	EBT	WBL	WBT	WBR	SBLn1
Capacity (veh/h)	887	1558	-	1533	-	-	981
HCM Lane V/C Ratio	0.074	0.001	-	0.001	-	-	0.014
HCM Control Delay (s)	9.4	7.3	0	7.4	-	-	8.7
HCM Lane LOS	A	A	A	A	-	-	A
HCM 95th %tile Q(veh)	0.2	0	-	0	-	-	0

Intersection	
Int Delay, s/veh	6.9

Movement	EBL	EBT	EBR	WBL	WBT	WBR	NBL	NBT	NBR	SBL	SBT	SBR
Lane Configurations												
Traffic Vol, veh/h	0	0	61	0	0	58	171	807	180	200	1459	16
Future Vol, veh/h	0	0	61	0	0	58	171	807	180	200	1459	16
Conflicting Peds, #/hr	0	0	0	0	0	0	0	0	0	0	0	0
Sign Control	Stop	Stop	Stop	Stop	Stop	Stop	Free	Free	Free	Free	Free	Free
RT Channelized	-	-	None	-	-	Stop	-	-	None	-	-	None
Storage Length	-	-	-	-	-	0	75	-	0	50	-	-
Veh in Median Storage, #	-	0	-	-	0	-	-	0	-	-	0	-
Grade, %	-	0	-	-	0	-	-	0	-	-	0	-
Peak Hour Factor	95	95	95	95	95	95	95	95	95	95	95	95
Heavy Vehicles, %	2	2	2	2	2	2	2	2	2	1	2	1
Mvmt Flow	0	0	64	0	0	61	180	849	189	211	1536	17

Major/Minor	Minor2			Minor1			Major1			Major2		
Conflicting Flow All	2667	3365	777	-	-	425	1553	0	0	1038	0	0
Stage 1	1967	1967	-	-	-	-	-	-	-	-	-	-
Stage 2	700	1398	-	-	-	-	-	-	-	-	-	-
Critical Hdwy	6.44	6.54	7.14	-	-	7.14	5.34	-	-	5.32	-	-
Critical Hdwy Stg 1	7.34	5.54	-	-	-	-	-	-	-	-	-	-
Critical Hdwy Stg 2	6.74	5.54	-	-	-	-	-	-	-	-	-	-
Follow-up Hdwy	3.82	4.02	3.92	-	-	3.92	3.12	-	-	3.11	-	-
Pot Cap-1 Maneuver	24	8	291	0	0	494	210	-	-	378	-	-
Stage 1	41	107	-	0	0	-	-	-	-	-	-	-
Stage 2	360	206	-	0	0	-	-	-	-	-	-	-
Platoon blocked, %								-	-		-	-
Mov Cap-1 Maneuver	4	1	291	-	-	494	210	-	-	378	-	-
Mov Cap-2 Maneuver	4	1	-	-	-	-	-	-	-	-	-	-
Stage 1	6	47	-	-	-	-	-	-	-	-	-	-
Stage 2	45	29	-	-	-	-	-	-	-	-	-	-

Approach	EB	WB	NB	SB
HCM Control Delay, s	20.8	13.3	11.4	3.1
HCM LOS	C	B		

Minor Lane/Major Mvmt	NBL	NBT	NBR	EBLn1	WBLn1	SBL	SBT	SBR
Capacity (veh/h)	210	-	-	291	494	378	-	-
HCM Lane V/C Ratio	0.857	-	-	0.221	0.124	0.557	-	-
HCM Control Delay (s)	77.4	-	-	20.8	13.3	25.9	-	-
HCM Lane LOS	F	-	-	C	B	D	-	-
HCM 95th %tile Q(veh)	6.6	-	-	0.8	0.4	3.3	-	-

Intersection	
Int Delay, s/veh	1.8

Movement	EBL	EBT	EBR	WBL	WBT	WBR	NBL	NBT	NBR	SBL	SBT	SBR
Lane Configurations												
Traffic Vol, veh/h	5	0	104	0	0	210	24	1440	79	57	1238	16
Future Vol, veh/h	5	0	104	0	0	210	24	1440	79	57	1238	16
Conflicting Peds, #/hr	0	0	0	0	0	0	0	0	0	0	0	0
Sign Control	Stop	Stop	Stop	Stop	Stop	Stop	Free	Free	Free	Free	Free	Free
RT Channelized	-	-	None	-	-	Stop	-	-	None	-	-	None
Storage Length	-	-	-	-	-	0	75	-	70	50	-	-
Veh in Median Storage, #	-	0	-	-	0	-	-	0	-	-	0	-
Grade, %	-	0	-	-	0	-	-	0	-	-	0	-
Peak Hour Factor	95	95	95	95	95	95	95	95	95	95	95	95
Heavy Vehicles, %	2	2	2	2	2	1	2	2	2	1	2	2
Mvmt Flow	5	0	109	0	0	221	25	1516	83	60	1303	17

Major/Minor	Minor2			Minor1			Major1			Major2		
Conflicting Flow All	2088	3081	660	-	-	-	1320	0	0	1599	0	0
Stage 1	1432	1432	-	-	-	-	-	-	-	-	-	-
Stage 2	656	1649	-	-	-	-	-	-	-	-	-	-
Critical Hdwy	6.44	6.54	7.14	-	-	-	5.34	-	-	5.32	-	-
Critical Hdwy Stg 1	7.34	5.54	-	-	-	-	-	-	-	-	-	-
Critical Hdwy Stg 2	6.74	5.54	-	-	-	-	-	-	-	-	-	-
Follow-up Hdwy	3.82	4.02	3.92	-	-	-	3.12	-	-	3.11	-	-
Pot Cap-1 Maneuver	56	12	348	0	0	0	273	-	-	201	-	-
Stage 1	99	198	-	0	0	0	-	-	-	-	-	-
Stage 2	383	155	-	0	0	0	-	-	-	-	-	-
Platoon blocked, %								-	-		-	-
Mov Cap-1 Maneuver	40	8	348	-	-	-	273	-	-	201	-	-
Mov Cap-2 Maneuver	40	8	-	-	-	-	-	-	-	-	-	-
Stage 1	90	139	-	-	-	-	-	-	-	-	-	-
Stage 2	348	141	-	-	-	-	-	-	-	-	-	-

Approach	EB	WB	NB	SB
HCM Control Delay, s	29.8	43.6	0.3	1.3
HCM LOS	D	E		

Minor Lane/Major Mvmt	NBL	NBT	NBR	EBLn1	WBLn1	SBL	SBT	SBR
Capacity (veh/h)	273	-	-	257	302	201	-	-
HCM Lane V/C Ratio	0.093	-	-	0.446	0.732	0.299	-	-
HCM Control Delay (s)	19.5	-	-	29.8	43.6	30.4	-	-
HCM Lane LOS	C	-	-	D	E	D	-	-
HCM 95th %tile Q(veh)	0.3	-	-	2.2	5.4	1.2	-	-

Intersection	
Int Delay, s/veh	2.8

Movement	EBL	EBT	EBR	WBL	WBT	WBR	NBL	NBT	NBR	SBL	SBT	SBR
Lane Configurations												
Traffic Vol, veh/h	13	53	0	0	49	4	32	0	0	1	0	3
Future Vol, veh/h	13	53	0	0	49	4	32	0	0	1	0	3
Conflicting Peds, #/hr	0	0	0	0	0	0	0	0	0	0	0	0
Sign Control	Free	Free	Free	Free	Free	Free	Stop	Stop	Stop	Stop	Stop	Stop
RT Channelized	-	-	None	-	-	None	-	-	None	-	-	None
Storage Length	-	-	-	-	-	-	0	-	-	-	-	-
Veh in Median Storage, #	-	0	-	-	0	-	-	0	-	-	0	-
Grade, %	-	0	-	-	0	-	-	0	-	-	0	-
Peak Hour Factor	95	95	95	95	95	95	95	95	95	95	95	95
Heavy Vehicles, %	2	2	2	2	2	2	2	2	2	2	2	2
Mvmt Flow	14	56	0	0	52	4	34	0	0	1	0	3

Major/Minor	Major1			Major2			Minor1			Minor2		
Conflicting Flow All	56	0	-	-	-	0	140	-	-	138	138	54
Stage 1	-	-	-	-	-	-	84	-	-	54	54	-
Stage 2	-	-	-	-	-	-	56	-	-	84	84	-
Critical Hdwy	4.12	-	-	-	-	-	7.12	-	-	7.12	6.52	6.22
Critical Hdwy Stg 1	-	-	-	-	-	-	6.12	-	-	6.12	5.52	-
Critical Hdwy Stg 2	-	-	-	-	-	-	6.12	-	-	6.12	5.52	-
Follow-up Hdwy	2.218	-	-	-	-	-	3.518	-	-	3.518	4.018	3.318
Pot Cap-1 Maneuver	1549	-	0	0	-	-	830	0	0	833	753	1013
Stage 1	-	-	0	0	-	-	924	0	0	958	850	-
Stage 2	-	-	0	0	-	-	956	0	0	924	825	-
Platoon blocked, %		-			-	-						
Mov Cap-1 Maneuver	1549	-	-	-	-	-	822	-	-	827	746	1013
Mov Cap-2 Maneuver	-	-	-	-	-	-	822	-	-	827	746	-
Stage 1	-	-	-	-	-	-	916	-	-	949	850	-
Stage 2	-	-	-	-	-	-	953	-	-	916	818	-

Approach	EB	WB	NB	SB
HCM Control Delay, s	1.4	0	9.6	8.8
HCM LOS			A	A

Minor Lane/Major Mvmt	NBLn1	EBL	EBT	WBT	WBR	SBLn1
Capacity (veh/h)	822	1549	-	-	-	959
HCM Lane V/C Ratio	0.041	0.009	-	-	-	0.004
HCM Control Delay (s)	9.6	7.3	0	-	-	8.8
HCM Lane LOS	A	A	A	-	-	A
HCM 95th %tile Q(veh)	0.1	0	-	-	-	0

Intersection	
Int Delay, s/veh	6

Movement	EBL	EBT	EBR	WBL	WBT	WBR	NBL	NBT	NBR	SBL	SBT	SBR
Lane Configurations												
Traffic Vol, veh/h	2	65	0	0	47	0	148	1	0	2	0	11
Future Vol, veh/h	2	65	0	0	47	0	148	1	0	2	0	11
Conflicting Peds, #/hr	0	0	0	0	0	0	0	0	0	0	0	0
Sign Control	Free	Free	Free	Free	Free	Free	Stop	Stop	Stop	Stop	Stop	Stop
RT Channelized	-	-	None	-	-	None	-	-	None	-	-	None
Storage Length	-	-	-	-	-	-	0	-	-	-	-	-
Veh in Median Storage, #	-	0	-	-	0	-	-	0	-	-	0	-
Grade, %	-	0	-	-	0	-	-	0	-	-	0	-
Peak Hour Factor	95	95	95	95	95	95	95	95	95	95	95	95
Heavy Vehicles, %	2	2	2	2	2	2	2	2	2	2	2	2
Mvmt Flow	2	68	0	0	49	0	156	1	0	2	0	12

Major/Minor	Major1			Major2			Minor1			Minor2		
Conflicting Flow All	49	0	-	-	-	0	127	121	-	122	121	49
Stage 1	-	-	-	-	-	-	72	72	-	49	49	-
Stage 2	-	-	-	-	-	-	55	49	-	73	72	-
Critical Hdwy	4.12	-	-	-	-	-	7.12	6.52	-	7.12	6.52	6.22
Critical Hdwy Stg 1	-	-	-	-	-	-	6.12	5.52	-	6.12	5.52	-
Critical Hdwy Stg 2	-	-	-	-	-	-	6.12	5.52	-	6.12	5.52	-
Follow-up Hdwy	2.218	-	-	-	-	-	3.518	4.018	-	3.518	4.018	3.318
Pot Cap-1 Maneuver	1558	-	0	0	-	-	846	769	0	853	769	1020
Stage 1	-	-	0	0	-	-	938	835	0	964	854	-
Stage 2	-	-	0	0	-	-	957	854	0	937	835	-
Platoon blocked, %		-			-	-						
Mov Cap-1 Maneuver	1558	-	-	-	-	-	836	768	-	851	768	1020
Mov Cap-2 Maneuver	-	-	-	-	-	-	836	768	-	851	768	-
Stage 1	-	-	-	-	-	-	937	834	-	963	854	-
Stage 2	-	-	-	-	-	-	946	854	-	935	834	-

Approach	EB	WB	NB	SB
HCM Control Delay, s	0.2	0	10.3	8.7
HCM LOS			B	A

Minor Lane/Major Mvmt	NBLn1	EBL	EBT	WBT	WBR	SBLn1
Capacity (veh/h)	836	1558	-	-	-	990
HCM Lane V/C Ratio	0.186	0.001	-	-	-	0.014
HCM Control Delay (s)	10.3	7.3	0	-	-	8.7
HCM Lane LOS	B	A	A	-	-	A
HCM 95th %tile Q(veh)	0.7	0	-	-	-	0

Intersection: 3: W. Columbia Place & Main Street

Movement	EB	WB	NB	NB	NB	NB	SB
Directions Served	LTR	R	L	T	T	R	L
Maximum Queue (ft)	80	88	30	21	17	4	43
Average Queue (ft)	51	34	11	6	3	1	24
95th Queue (ft)	92	101	34	36	23	7	52
Link Distance (ft)	78	118		261	261		
Upstream Blk Time (%)	2	0					
Queuing Penalty (veh)	0	0					
Storage Bay Dist (ft)			75			70	50
Storage Blk Time (%)				0			2
Queuing Penalty (veh)				0			7



Lane Group	EBT	EBR	WBT	NBL	NBT	SBL	SBT
Lane Group Flow (vph)	122	84	220	156	1682	19	1158
v/c Ratio	0.40	0.18	0.66	0.58	0.60	0.10	0.64
Control Delay	20.0	2.6	26.6	36.9	12.5	23.6	16.9
Queue Delay	0.0	0.0	0.0	0.0	0.0	0.0	0.0
Total Delay	20.0	2.6	26.6	36.9	12.5	23.6	16.9
Queue Length 50th (ft)	33	0	59	47	106	6	114
Queue Length 95th (ft)	64	15	107	#147	#302	22	156
Internal Link Dist (ft)	321		121		192		295
Turn Bay Length (ft)				100		125	
Base Capacity (vph)	408	603	444	270	2819	185	1803
Starvation Cap Reductn	0	0	0	0	0	0	0
Spillback Cap Reductn	0	0	0	0	0	0	0
Storage Cap Reductn	0	0	0	0	0	0	0
Reduced v/c Ratio	0.30	0.14	0.50	0.58	0.60	0.10	0.64

Intersection Summary

95th percentile volume exceeds capacity, queue may be longer.
Queue shown is maximum after two cycles.

Intersection	
Intersection Delay, s/veh	9.1
Intersection LOS	A

Movement	EBL	EBT	EBR	WBL	WBT	WBR	NBL	NBT	NBR	SBL	SBT	SBR
Lane Configurations												
Traffic Vol, veh/h	0	129	251	0	10	12	48	20	0	0	0	0
Future Vol, veh/h	0	129	251	0	10	12	48	20	0	0	0	0
Peak Hour Factor	0.95	0.95	0.95	0.95	0.95	0.95	0.95	0.95	0.95	0.95	0.95	0.95
Heavy Vehicles, %	2	2	2	2	2	2	2	2	2	2	2	2
Mvmt Flow	0	136	264	0	11	13	51	21	0	0	0	0
Number of Lanes	0	1	0	0	1	0	0	1	0	0	0	0

Approach	EB	WB	NB
Opposing Approach	WB	EB	
Opposing Lanes	1	1	0
Conflicting Approach Left		NB	EB
Conflicting Lanes Left	0	1	1
Conflicting Approach Right	NB		WB
Conflicting Lanes Right	1	0	1
HCM Control Delay	9.3	7.3	8.5
HCM LOS	A	A	A

Lane	NBLn1	EBLn1	WBLn1
Vol Left, %	71%	0%	0%
Vol Thru, %	29%	34%	45%
Vol Right, %	0%	66%	55%
Sign Control	Stop	Stop	Stop
Traffic Vol by Lane	68	380	22
LT Vol	48	0	0
Through Vol	20	129	10
RT Vol	0	251	12
Lane Flow Rate	72	400	23
Geometry Grp	1	1	1
Degree of Util (X)	0.098	0.409	0.027
Departure Headway (Hd)	4.919	3.681	4.152
Convergence, Y/N	Yes	Yes	Yes
Cap	733	964	867
Service Time	2.92	1.754	2.156
HCM Lane V/C Ratio	0.098	0.415	0.027
HCM Control Delay	8.5	9.3	7.3
HCM Lane LOS	A	A	A
HCM 95th-tile Q	0.3	2	0.1

Intersection	
Intersection Delay, s/veh	9.4
Intersection LOS	A

Movement	EBL	EBT	EBR	WBL	WBT	WBR	NBL	NBT	NBR	SBL	SBT	SBR
Lane Configurations												
Traffic Vol, veh/h	5	26	110	0	8	63	202	86	0	0	0	0
Future Vol, veh/h	5	26	110	0	8	63	202	86	0	0	0	0
Peak Hour Factor	0.95	0.95	0.95	0.95	0.95	0.95	0.95	0.95	0.95	0.95	0.95	0.95
Heavy Vehicles, %	2	2	2	2	2	2	2	2	2	2	2	2
Mvmt Flow	5	27	116	0	8	66	213	91	0	0	0	0
Number of Lanes	0	1	0	0	1	0	0	1	0	0	0	0

Approach	EB	WB	NB
Opposing Approach	WB	EB	
Opposing Lanes	1	1	0
Conflicting Approach Left		NB	EB
Conflicting Lanes Left	0	1	1
Conflicting Approach Right	NB		WB
Conflicting Lanes Right	1	0	1
HCM Control Delay	8.2	7.8	10.4
HCM LOS	A	A	B

Lane	NBLn1	EBLn1	WBLn1
Vol Left, %	70%	4%	0%
Vol Thru, %	30%	18%	11%
Vol Right, %	0%	78%	89%
Sign Control	Stop	Stop	Stop
Traffic Vol by Lane	288	141	71
LT Vol	202	5	0
Through Vol	86	26	8
RT Vol	0	110	63
Lane Flow Rate	303	148	75
Geometry Grp	1	1	1
Degree of Util (X)	0.384	0.177	0.089
Departure Headway (Hd)	4.558	4.293	4.303
Convergence, Y/N	Yes	Yes	Yes
Cap	791	837	833
Service Time	2.584	2.315	2.331
HCM Lane V/C Ratio	0.383	0.177	0.09
HCM Control Delay	10.4	8.2	7.8
HCM Lane LOS	B	A	A
HCM 95th-tile Q	1.8	0.6	0.3