Appendix E

Noise Analysis Memorandum

605 THIRD STREET
ENCINITAS, CALIFORNIA 92024
T 760.942.5147 F 760.632.0164

MEMORANDUM

To:	Collin Ramsey, Dudek
From:	Mike Greene, Dudek
Subject:	KL Fenix Truck Facility Project - Noise Analysis
Date:	February 25, 2020
Attachment(s):	A: Field Noise Data Sheets; B: Construction Noise Model Input / Output; C: Traffic Noise Model Input / Output: D: On-Site Mechanical Noise Calculations

The City of Carson (the "City") has received a development application (Specific Plan) from KL Fenix Corporation (the "Applicant") requesting approval to construct and operate a truck facility consisting of a warehouse/office building, parking spaces for the proposed warehouse/office use, spaces for cargo containers, and designated exterior and interior areas for the unloading and loading of goods between containers (the "Project"). This memorandum estimates potential noise and vibration impacts from construction and operation of the Project in accordance with the California Environmental Quality Act (CEQA) Guidelines.

The contents and organization of this memorandum are as follows: Project Description, Environmental Setting, Regulatory Setting, Noise and Vibration Impacts Assessment, Conclusions, and References Cited.

1 Project Description

The Project is located at 20601 South Main Street in the City (the "Project Site"), as shown in Figure 1 (Project Location). The Project Site is bounded by a drainage channel to the north, Figueroa Street to the west, existing commercial/industrial uses to the south, and existing commercial and residential uses to the east. The Project Site (shown in Figure 2) comprises approximately 14 acres and is currently a vacant lot. The Project would involve the construction of a modern Truck Facility project. Anticipated operating hours (based on information provided by the applicant) for the office would be from 8 a.m. to 6 p.m. Monday through Friday, 8 a.m. to 5 p.m. on Saturdays, and closed on Sundays. The anticipated hours for the truck operations would be from 6 a.m. to 1 a.m. Monday through Friday, 8 a.m. to 5 p.m. on Saturdays, and closed on Sundays.

The Truck Facility project will include a warehouse/office building that will face the Main Street frontage. The warehouse/office building is strategically proposed to be located on the Main Street side, so it can act as a visual screen for future developments on properties located to the east of this site and to the surrounding areas. Additionally, the project will include solid walls with a minimum height of 8 feet along Main Street (to the east), Figueroa Street (to the west), and the northern and southern property lines. The warehouse space will be approximately 39,500 square feet with high ceilings, along with an attached two story office space on one side that will be about 14,050 square feet. The total building area will be approximately 53,550 square feet with a height of approximately 42 feet.

The principal use of the project will be for transferring goods or breaking down and assembling tractor-trailer transportation (as defined by the City of Carson Municipal Code Section 9191.698). The truck facility on this site will mainly contribute to mobilize goods that are imported, and also for goods that are made in the United States, to be exported through the local Ports of Los Angeles and Long Beach. The primary route for the trucks transporting the imported and exported goods would be on the on and off ramp located across Figueroa Street onto the 110 Interstate Freeway, located directly on the west side of the property. According to information from the applicant, a very limited number of trucks using this truck facility would use the City of Carson's streets as part of their route. If they were to use the City of Carson's streets, only a particular street designated as a truck route would be used.

The proposed project would include 102 parking spaces for the proposed warehouse/office use. This number of parking spaces would be in compliance with the number of spaces required by the City of Carson's Municipal Code for the proposed use and size of building. It would also include 475 spaces for cargo containers, along with 6 loading docks, and designated exterior and interior areas for the unloading and loading of goods between containers. Storage for stacked containers is not a part of the project.

2 Environmental Setting

2.1 Noise and Vibration Characteristics

2.1.1 Noise

Sound may be described in terms of level or amplitude (measured in decibels (dB)), frequency or pitch (measured in hertz (Hz) or cycles per second), and duration (measured in seconds or minutes). The standard unit of measurement of the amplitude of sound is the decibel. Because the human ear is not equally sensitive to sound at all frequencies, a special frequency-dependent rating scale is used to relate noise to human sensitivity. The A-weighted decibel scale (dBA) performs this compensation by discriminating against low and very high frequencies in a manner approximating the sensitivity of the human ear. Several descriptors of noise (noise metrics) exist to help predict average community reactions to the adverse effects of environmental noise, including traffic-generated noise, on a community. These descriptors include the equivalent noise level over a given period (L_{eq}), the statistical sound level (L_n), the day–night average noise level (L_{dn}), and the community noise equivalent level (CNEL). Each of these descriptors uses units of dBA. Table 1 provides examples of A-weighted noise levels from common sounds. In general, human sound perception is such that a change in sound level of 3 dB is barely noticeable; a change of 5 dB is clearly noticeable; and a change of 10 dB is perceived as doubling or halving of the sound level.

Table 1. Typical Sound Levels in the Environment and Industry

Common Outdoor Activities	Noise Level (dBA)	Common Indoor Activities
—	110	Rock band
Jet flyover at 300 meters (1,000 feet)	100	—
Gas lawn mower at 1 meter (3 feet)	90	—
Diesel truck at 15 meters (50 feet), at 80 kph (50 mph)	80	Food blender at 1 meter (3 feet) Garbage disposal at 1 meter (3 feet)
Noisy urban area, daytime gas lawn mower at 30 meters (100 feet)	70	Vacuum cleaner at 3 meters (10 feet)
Commercial area Heavy traffic at 90 meters (300 feet)	60	Normal speech at 1 meter (3 feet)
Quiet urban daytime	50	Large business office

Table 1. Typical Sound Levels in the Environment and Industry

Common Outdoor Activities	Noise Level (dBA)	Common Indoor Activities
		Dishwasher, next room
Quiet urban nighttime	40	Theater, large conference room (background)
Quiet suburban nighttime	30	Library
Quiet rural night time	20	Bedroom at night, concert hall (background)
—	10	Broadcast/recording studio
Lowest threshold of human hearing	0	Lowest threshold of human hearing

Notes: dBA = A-weighted decibels; kph = kilometers per hour; mph = miles per hour
Source: Caltrans 2013a.

L_{eq} is a sound energy level averaged over a specified period (typically no less than 15 minutes for environmental studies). L_{eq} is a single numerical value that represents the amount of variable sound energy received by a receptor during a time interval. For example, a 1-hour L_{eq} measurement would represent the average amount of energy contained in all the noise that occurred in that hour. L_{eq} is an effective noise descriptor because of its ability to assess the total time-varying effects of noise on sensitive receptors (see Section 2.2). L_{max} is the greatest sound level measured during a designated time interval or event.

Unlike the L_{eq} metrics, L_{dn} and CNEL metrics always represent 24-hour periods, usually on an annualized basis. L_{dn} and CNEL also differ from L_{eq} because they apply a time-weighted factor designed to emphasize noise events that occur during the evening and nighttime hours (when speech and sleep disturbance is of more concern). "Time weighted" refers to the fact that L_{dn} and CNEL penalize noise that occurs during certain sensitive periods. In the case of CNEL, noise occurring during the daytime (7:00 a.m.–7:00 p.m.) receives no penalty. Noise during the evening (7:00 p.m.–10:00 p.m.) is penalized by adding 5 dB, while nighttime (10:00 p.m.–7:00 a.m.) noise is penalized by adding 10 dB. L_{dn} differs from CNEL in that the daytime period is defined as 7:00 a.m.–10:00 p.m., thus eliminating the evening period. L_{dn} and CNEL are the predominant criteria used to measure roadway noise affecting residential receptors. These two metrics generally differ from one another by no more than 0.5 dB to 1 dB, and as such are often treated as equivalent to one another.

2.1.2 Vibration

Vibration is an oscillatory motion through a solid medium in which the motion's amplitude can be described in terms of displacement, velocity, or acceleration. Vibration can be a serious concern, causing buildings to shake and rumbling sounds to be heard. In contrast to noise, vibration is not a common environmental problem. It is unusual for vibration from sources such as buses and trucks to be perceptible, even in locations close to major roads. Some common sources of vibration are trains, buses on rough roads, and construction activities, such as blasting, pile driving, and heavy earthmoving equipment.

Several different methods are used to quantify vibration. Peak particle velocity (PPV) is defined as the maximum instantaneous peak of the vibration signal. PPV is most frequently used to describe vibration impacts to buildings and is usually measured in inches per second. The root mean square (RMS) amplitude is most frequently used to describe the effect of vibration on the human body and is defined as the average of the squared amplitude of the signal. Decibel notation (VdB) is commonly used to measure RMS. The decibel notation acts to compress the range of numbers required to describe vibration.

High levels of vibration may cause physical personal injury or damage to buildings. However, vibration levels rarely affect human health. Instead, most people consider vibration to be an annoyance that can affect concentration or disturb sleep. In addition, high levels of vibration can damage fragile buildings or interfere with equipment that is highly sensitive to vibration (e.g., electron microscopes). Most perceptible indoor vibration is caused by sources within buildings, such as operation of mechanical equipment, movement of people, or slamming of doors. Typical outdoor sources of perceptible vibration are construction equipment, steel-wheeled trains, and traffic on rough roads. If the roadway is smooth, the vibration from traffic is rarely perceptible.

2.2 Sensitive Receptors

Noise- and vibration-sensitive land uses are locations where people reside or where the presence of unwanted sound could adversely affect the use of the land. Residences, schools, hospitals, guest lodging, libraries, and some passive recreation areas would be considered noise and vibration sensitive and may warrant unique measures for protection from intruding noise.

Sensitive receptors near the project site include residential uses to the east, and two churches located to the south. These sensitive receptors represent the nearest residential land uses with the potential to be impacted by construction and operation of the Project. Additional sensitive receptors are located farther from the Project Site in the surrounding community and would be less impacted by noise and vibration levels than the above-listed sensitive receptors.

2.3 Existing Noise Conditions

Currently, the project site is a vacant lot, and little to no noise is generated on-site. However, the surrounding area is subject to relatively high levels of traffic noise associated with adjacent roadways, including Main Street, Torrance Boulevard, Del Amo Boulevard, Figueroa Street and the the I-110 freeway, as well as noise from the adjacent industrial/commercial uses.

Noise measurements were conducted on and near the Project Site on August 14 and 15, 2019, to characterize the existing noise levels. The measurements were made using calibrated SoftdB Piccolo integrating sound level meters. The sound level meters meet the current American National Standards Institute standard for a Type 2 (general purpose) sound level meter. The accuracy of the sound level meter was verified using a field calibrator before and after the measurements, and the measurements were conducted with the microphone positioned approximately five feet above the ground.

Six short-term noise measurement locations (ST) that represent existing sensitive receivers were selected near the Project Site. These locations are depicted as receivers ST1–ST6 on Figure 3, Noise Measurement Locations. The measured energy-averaged (L_{eq}) and maximum (L_{max}) noise levels are provided in Table 2. The primary noise sources at the sites identified in Table 2 consisted of traffic along adjacent roadways; nearby mechanical niose (compressors, air conditioning equipment, landscaping equipment) represented secondary noise sources. As shown in Table 2, the measured sound levels ranged from approximately 66 dBA L_{eq} at ST1 to 73 dBA L_{eq} at ST5. Table 2 provides the location, date, and time the noise measurements were taken. The field noise data sheets are provided in Attachment A.

Table 2. Measured Noise Levels

Receptors	Location	Date	Time	L_{eq} (dBA)	L_{max} (dBA)
ST1	South of Project Site, adjacent to Mission Ebenezer Family Church	8/14/2019	9:48 a.m.–10:03 a.m.	65.5	71.3
ST2	South of Project Site, adjacent to Glory Christian Fellowship Church	8/14/2019	10:11 a.m.–10:26 a.m.	70.6	84.4
ST3	East of Project Site, adjacent to residences at 20630 Main Street	8/14/2019	10:35 a.m.–10:50 a.m.	71.5	82.7
ST4	Southeast of Project Site, adjacent to residences at 20832 Main Street	8/14/2019	11:08 a.m.–11:23 a.m.	72.3	82.5
ST5	Southeast of Project Site, adjacent to church at 20926 Main Street	8/14/2019	11:43 a.m.–11:58 a.m	72.7	84.4
ST6	Southwest of Project Site, adjacent to residences at 20802 Conrad Avenue	8/14/2019	12:16 p.m.–12:31 p.m	71.1	94.0

Source: Attachment A
Notes: L_{eq} = equivalent continuous sound level (time-averaged sound level); L_{max} = maximum sound level during the measurement interval; dBA = A-weighted decibels.

In addition, one long-term, unattended 24-hour noise measurement was taken from August 13-14, 2019. These measurements were intended to determine the existing noise levels in the Project vicinity near noise-sensitive land uses, resulting from traffic or from other sources. As shown in Table 3, the long-term hourly average noise levels ranged from approximately 59 dBA L_{eq} (from 8 AM to 9 AM) to approximately 73 dBA L_{eq} (from 7 PM to 10 PM, and from 11 PM to 2 AM). The 24-hour weighted average noise level at LT1 was approximately 76 dBA CNEL. The primary noise source was traffic on the local roadways.

Table 3. Measured Long-Term (LT1) Noise Levels 8/13/2019 to 8/14/2019

Time Interval	Leq	Lmax	Lmin	L10	L50	L90
10:00 AM- 11:00 AM	69.8	81.2	56.1	72.0	66.0	58.9
11:00 AM- 12:00 PM	69.9	81.4	57.7	72.6	66.6	60.4
12:00 PM- 1:00 PM	70.1	85.0	58.7	72.6	67.1	61.6
1:00 PM- 2:00 PM	70.8	82.0	58.9	74.0	68.0	61.8
2:00 PM- 3:00 PM	70.8	82.3	57.8	74.0	68.0	61.4
3:00 PM- 4:00 PM	70.8	82.4	57.0	74.0	68.0	60.0
4:00 PM- 5:00 PM	71.2	84.6	57.9	74.0	68.6	60.6
5:00 PM- 6:00 PM	71.5	84.8	58.8	74.0	69.1	61.1
6:00 PM- 7:00 PM	72.3	90.3	59.6	74.0	69.6	61.6
7:00 PM- 8:00 PM	72.5	90.3	60.0	74.0	70.0	62.0
8:00 PM- 9:00 PM	72.6	90.2	60.2	74.0	70.0	62.0
9:00 PM- 10:00 PM	72.8	90.4	60.1	74.0	70.0	62.0
10:00 PM- 11:00 PM	72.3	84.8	59.9	74.0	70.0	62.0

Table 3. Measured Long-Term (LT1) Noise Levels 8/13/2019 to 8/14/2019

Time Interval	Leq	Lmax	Lmin	L10	L50	L90
11:00 PM- 12:00 AM	72.5	85.3	59.8	74.0	70.0	62.6
12:00 AM- 1:00 AM	72.6	85.2	59.8	74.6	70.0	62.6
1:00 AM- 2:00 AM	59.6	75.9	52.0	59.3	53.8	52.6
2:00 AM- 3:00 AM	59.6	76.2	51.3	59.3	53.4	52.0
3:00 AM- 4:00 AM	60.0	76.1	51.1	60.9	52.6	52.0
4:00 AM- 5:00 AM	60.1	75.7	51.1	61.4	53.1	52.0
5:00 AM- 6:00 AM	60.1	75.2	51.1	61.3	53.1	51.6
6:00 AM- 7:00 AM	59.7	75.9	51.0	60.4	53.1	51.1
7:00 AM- 8:00 AM	59.0	75.8	50.6	58.6	52.6	50.6
8:00 AM- 9:00 AM	59.3	76.1	50.3	59.4	52.0	50.6
9:00 AM- 10:00 AM	60.0	76.4	50.5	61.6	52.0	51.1
Lowest Hourly Average Noise Level (59 dBA L_{eq})						
Highest Hourly Average Noise Level (73 dBA L_{eq})						
24-Hour Average Noise Level (70 dBA $L_{eq\ 24\text{-}Hr}$)						
24-Hour Weighted-Average Noise Level (76 dBA CNEL)						

Source: Attachment A

3 Regulatory Setting

City of Carson General Plan

Applicable policies and standards governing environmental noise in the City are contained in the City of Carson General Plan Noise Element (City of Carson 2004). The Noise Element specifies exterior noise levels up to 60 CNEL as normally acceptable and up to 65 CNEL as conditionally acceptable. Noise levels exceeding 65 CNEL are generally unacceptable for multiple family residential uses. Table 4 shows the standards regarding acceptable noise level limits for various land uses in the City.

Table 4. Noise Element Land Use Compatibility Matrix

Land Use Category	Community Noise Exposure (CNEL)			
	Normally Acceptable[1]	Conditionally Acceptable[2]	Normally Unacceptable[3]	Clearly Unacceptable[4]
Residential–Low Density	50–-60	60–65	65–75	75–85
Residential–Multiple Family	50–60	60–65	65–75	75–85
Transient Lodging–Motel, Hotels	50–65	65–70	70–80	80–85

Table 4. Noise Element Land Use Compatibility Matrix

Land Use Category	Community Noise Exposure (CNEL)			
	Normally Acceptable[1]	Conditionally Acceptable[2]	Normally Unacceptable[3]	Clearly Unacceptable[4]
Schools, Libraries, Churches, Hospitals, Nursing Homes	50–60	60–65	65–80	80–85
Amphitheater, Concert Hall, Auditorium, Meeting Hall	NA	50–65	NA	65–85
Sports Arenas, Outdoor Spectator Sports	NA	50–70	NA	70–85
Playgrounds, Neighborhood Parks	50–70	NA	70–75	75–85
Gold Courses, Riding Stables, Water Recreation, Cemeteries	50–70	NA	70–80	80–85
Office Buildings, Business Commercial and Professional	50–67.5	67.5–75	75–85	NA
Industrial, Manufacturing, Utilities, Agriculture	50–70	70–75	75–85	NA

Source: City of Carson 2004.**Notes:** CNEL = Community Noise Equivalent Level; NA = Not Applicable.

1 Normally Acceptable: Specified land use is satisfactory, based upon the assumption that any buildings involved are of normal conventional construction, without any special noise insulation requirements.

2 Conditionally Acceptable: New construction or development should be undertaken only after a detailed analysis of the noise reduction requirements is made and needed noise insulation features included in the design. Conventional construction, but with closed windows and fresh air supply systems or air conditioning will normally suffice.

3 Normally Unacceptable: New construction or development should be discouraged. If new construction or development does proceed, a detailed analysis of the noise reduction requirements must be made and needed noise insulation features included in the design.

4 Clearly Unacceptable: New construction or development should generally not be undertaken.

Section 3.4 of the City's Noise Element identifies residences, public and private school/preschool classrooms, churches, hospitals, and elderly care facilities as noise-sensitive receptors. The maximum interior exposure for these land uses is 45 dBA CNEL, with a maximum exterior exposure of 65 dBA CNEL.

Carson Municipal Code

Section 4101 (Unnecessary Noises) of Chapter I, Article IV of the Carson Municipal Code prohibits any disturbing, excessive, or offensive noise that causes discomfort or annoyance to any reasonable person of normal sensitivity residing in the community. Sections 4101(i) and 4101(j) of the Carson Municipal Code regulate noise from demolition and construction activities. These sections dictate that non-emergency construction activity (including demolition) and repair work can only occur between 7:00 a.m. and 6:00 p.m., Monday through Friday.

The City's Noise Control Ordinance (Section 5500 of the Carson Municipal Code) sets standards for noise levels throughout the City that are applicable to radios, phonographs, loudspeakers and amplifiers, electric motors or engines, animals, motor vehicles, and construction equipment. The Noise Ordinance also sets maximum limits on interior and exterior noise levels for each noise zone, unless exempted, as shown in Table 5. In addition, when construction activities would have a duration greater than 21 days, Section 5502(c) of the Noise Control Ordinance

requires that construction activities be conducted in such a manner to ensure that the noise level at an affected single-family residence does not exceed 65 dBA between 7:00 a.m. and 8:00 p.m. daily (except for Sundays and legal holidays when construction cannot occur), and 55 dBA between 8:00 p.m. and 7:00 a.m. on these same days.

Table 5. Noise Ordinance (Municipal Code) Standards

Noise Zone	Noise Zone Land Use (Receptor Property)	Time Interval	Exterior Noise Level (dBA)	Interior Noise Level (dBA)
I	Noise Sensitive Area	Anytime	45	NA
II	Residential Properties	10:00 p.m. to 7:00 a.m. (nighttime)	45	NA
		7:00 a.m. to 10:00 p.m. (daytime)	50	NA
III	Commercial Properties	10:00 p.m. to 7:00 a.m.	55	NA
		7:00 a.m. to 10:00 p.m.	60	NA
IV	Industrial Properties	Anytime	70	NA
All Zones	Multifamily	10:00 p.m. to 7:00 a.m.	NA	40
Open Space	Residential	7:00 a.m. to 10:00 p.m.	NA	50

Source: City of Carson 2004.
Notes: dBA = A-weighted decibel; NA = Not Applicable.

4 Noise and Vibration Impacts Assessment

a) ***Would the project result in generation of a substantial temporary or permanent increase in ambient noise levels in the vicinity of the project in excess of standards established in the local general plan or noise ordinance, or applicable standards of other agencies?***

Short-Term Construction Impacts

Less-Than-Significant Impact with Mitigation Provided. Construction of the project would generate noise that could expose nearby receptors to elevated noise levels that may disrupt communication and routine activities. The magnitude of the impact would depend on the type of construction activity, equipment, duration of the construction, distance between the noise source and receiver, and intervening structures. The following discussion addresses the noise levels estimated to result from construction of the project at nearby sensitive receptors (i.e., residences).

Construction – Equipment Inventory

CalEEMod was used to identify the construction equipment anticipated for development of the project. Based on this information, CalEEMod identified the anticipated equipment for each phase of project construction, listed in Table 6.

Table 6. Construction Equipment by Phase

Construction Phase	Equipment	Quantity
Site Preparation	Rubber Tired Dozers	2
Grading	Rollers	2
	Graders	2
	Rubber Tired Dozers	2
Building Construction	Cranes	1
	Forklifts	3
	Generator Sets	1
	Tractors/Loaders/Backhoes	3
	Welders	1
Paving	Cement and Mortar Mixers	2
Trenching	Excavators	2
	Bore/Drill Rigs	2
Architectural Coating	Aerial Lifts	2

Source: Dudek 2019 (Air Quality and Greenhouse Gas Analysis Technical Report).

Construction Noise – Assessment

With the construction equipment noise sources identified in Table 6, a noise analysis was performed using the Federal Highway Administration's Roadway Construction Noise Model (RCNM) (FHWA 2008). Input variables for RCNM consist of the receiver/land use types, the equipment type (e.g., backhoe, grader, scraper), the number of equipment pieces, the duty cycle for each piece of equipment (i.e., percentage of time the equipment typically works in a given time period), and the distance from the noise-sensitive receiver to the construction zone. The RCNM has default duty cycle values for the various pieces of equipment, which were derived from an extensive study of typical construction activity patterns. Those default duty cycle values were utilized for this analysis. Refer to Attachment B for the inputs used in the RCNM model and the detailed results.

Sensitive receptors near the project site include residential uses to the east, and two churches located to the south. The City's Noise Ordinance contains a construction noise restriction that pertains specifically to single-family residences. Where construction would have a duration greater than 21 days, construction noise levels are restricted to 65 dBA L_{eq} during the daytime at any single-family residence in the proximity of the construction effort (Section 5500 of the Carson Municipal Code).

The results of the construction noise analysis using the RCNM are summarized in Table 7. As shown, the noise levels from construction are predicted to range from approximately 63 dBA L_{eq} (during the architectural coating phase) to 78 dBA L_{eq} (during the grading phase) at the nearest noise-sensitive receivers (i.e., single family residences and the churches, each located approximately 110 feet from the closest point of construction). These noise levels would be higher than ambient noise levels in the area, and would be greater than the 65 dBA L_{eq} construction noise standard. Therefore, mitigation would be required to avoid a potentially significant short-term construction noise impact at the single-family residences east of the project site, and at the churches to the south.

Table 7. Construction Noise Analysis Summary

Construction Phase	Construction Noise at Representative Receiver Distances (L_{eq} (dBA))			
	Residences to the East		Nearest Church to the South	
	Nearest Source/Receiver Distance (Approx. 110')[1]	*Typical Source/Receiver Distance (Approx. 400')*[2]	*Nearest Source/Receiver Distance (Approx. 110')*[3]	*Typical Source/Receiver Distance (Approx. 330')*[4]
Site Preparation	73	63	73	64
Grading	78	68	78	70
Trenching	73	63	73	65
Building Construction	71	69	61	60
Paving	70	60	70	61
Architectural Coating	63	53	63	54

Source: Attachment B.
Note: Leq = equivalent continuous sound level (time-averaged sound level); dBA = A-weighted decibel.
1 The exception is for the building construction phase, for which the nearest source/receiver distance is approximately 200'.
2 The exception is for the building construction phase, for which the typical source/receiver distance is approximately 280'.
3 The exception is for the building construction phase, for which the nearest source/receiver distance is approximately 650'.
4 The exception is for the building construction phase, for which the typical source/receiver distance is approximately 775'.

The following mitigation measures would reduce noise impacts of the project to sensitive receivers during construction.

MM-NOI-1 At least 30 days prior to commencement of construction, the contractor shall provide written notice to all residential property owners and tenants within 300 feet of the project site that proposed construction activities could affect outdoor or indoor living areas. The notice shall contain a description of the project, a construction schedule including days and hours of construction, and a description of noise-reduction measures.

MM-NOI-2 Noise-generating construction activities (which may include preparation for construction work) shall be permitted weekdays between 7:00 a.m. and 6:00 p.m., excluding federal holidays. When a holiday falls on a Saturday or Sunday, the preceding Friday or following Monday, respectively, shall be observed as a legal holiday.

MM-NOI-3 Stationary construction equipment that generates noise that exceeds 85 dBA at the property boundaries shall be shielded with a barrier that meets a Sound Transmission Class rating of 25.

MM-NOI-4 All construction equipment powered by internal combustion engines shall be properly muffled and maintained. No internal combustion engine shall be operated on the site without a muffler. All diesel equipment shall be operated with closed engine doors and shall be equipped with factory recommended mufflers. Unnecessary idling of internal combustion engines shall be prohibited.

MM-NOI-5 Air compressors and generators used for construction shall be surrounded by temporary acoustical shelters. Whenever feasible, electrical power shall be used to run air compressors and similar power tools.

MM-NOI-6 A temporary construction sound barrier wall shall be installed along the easterly and southerly project site boundaries. Entry gates for construction vehicles shall be closed when vehicles are not entering or exiting the site. The barrier shall be made of sound-attenuating material (not landscaping). To effectively reduce sound transmission through the barrier, the material chosen must be rigid and sufficiently dense (at least 20 kilograms per square meter). All noise barrier material types are equally effective, acoustically, if they have this density. For example, 5/8-inch plywood, mounted with no gaps between adjacent sheets, would be of sufficient density to achieve the target attenuation. The barrier shall be 8 feet in height from the ground surface on the construction side of the wall to achieve the goal of blocking direct line-of-sight to the adjacent residence windows. It is estimated that a noise barrier of the prescribed density would reduce average noise levels to sensitive receptors by approximately 8 dBA or more by blocking direct line of sight to ground-level receptors. Alternatively, the planned permanent walls (also 8 feet in height) may be constructed prior to commencement of major onsite construction activities.

The above mitigation measures would reduce construction noise levels at the nearest single-family residences to be in compliance with the City's Noise Ordinance limit of 65 dBA L_{eq} during daytime hours, and would similarly reduce the construction noise exposure at the churches to the south. Therefore, with implementation of mitigation, short-term construction noise impacts would be less than significant.

Long-Term Operational Impacts

Traffic Noise

Less-Than-Significant Impact. The project has the potential to result in significant noise impacts from project-related traffic at nearby noise-sensitive land uses. Based upon information from Dudek transportation specialists (Dudek 2019), during the AM peak-hour, implementation of the project would result in a total of 48 passenger vehicles, 6 2-axle trucks, 15 3-axle trucks, and 35 4-or-more axle trucks. During the PM peak-hour, implementation of the project would result in a total of 46 passenger vehicles, 6 2-axle trucks, 14 3-axle trucks, and 34 4-or-more axle trucks. In terms of Average Daily Trips (ADTs), the project would generate approximately 546 passenger vehicle trips, 72 2-axle truck trips, 165 3-axle truck trips, and 404 4-or-more axle truck trips. However, all truck trips would access and exit the project site to the west, via Figueroa Boulevard, where no noise-sensitive land uses exist, and the majority of the truck trips would then leave the project area via the adjacent the I-110 on- and off-ramps.

Potential noise effects from vehicular traffic were assessed using the Federal Highway Administration's Traffic Noise Model Version 2.5 (FHWA 2004). Information used in the model included the Existing, Existing plus Project, Year 2021, and Year 2021 plus Project traffic volumes. Noise levels were modeled at representative noise-sensitive receivers. The receivers were modeled to be 5 feet above the local ground elevation. The six receiver locations used for the short-term noise measurements were used to represent

existing off-site noise-sensitive land uses (residences and churches). The measured and modeled receiver locations are shown in Figure 3.

The information provided from this modeling, along with the results from ambient noise survey measurements, was compared to the noise impact significance criteria to assess whether project-related traffic noise would cause a significant impact and, if so, where these impacts would occur. The results of the comparisons for the off-site noise-sensitive land uses are presented in Table 8. The input and output files for the Traffic Noise Model are provided in Attachment C.

Table 8. Summary of Off-Site Existing and Future (Year 2021) Unmitigated Traffic Noise Levels (dBA CNEL)

Modeled Receptor	Existing	Existing plus Project	Future (Year 2021)	Future (Year 2021) plus Project	Maximum Project-Related Noise Level Increase (dB)
ST1 - South of Project Site, adjacent to Mission Ebenezer Family Church	66	66	66	66	0
ST2 - South of Project Site, adjacent to Glory Christian Fellowship Church	70	70	72	72	0
ST3 - East of Project Site, adjacent to residences at 20630 Main Street	73	73	74	74	0
ST4 - Southeast of Project Site, adjacent to residences at 20832 Main Street	72	72	73	73	0
ST5 - Southeast of Project Site, adjacent to church at 20926 Main Street	72	72	73	73	0
ST6 - Southwest of Project Site, adjacent to residences at 20802 Conrad Avenue	72	72	72	72	0

Source: Attachment C.
Note: dBA = A-weighted decibel; CNEL = Community Noise Equivalent Level; dB = decibel.
Traffic noise levels are rounded to the nearest whole numbers.

As Table 8 shows, the project would increase the traffic noise levels along the nearby arterial roadways by 0 dBA (when rounded to whole numbers). A change (either an increase or a decrease) of 1 dB or less is not an audible change in the context of community noise (i.e., outside of a controlled test environment). In addition, the project would not cause noise levels to exceed applicable City noise standards. The project is not anticipated to result in significant traffic noise increases or cause an exceedance of applicable traffic noise standards. Therefore, impacts associated with off-site traffic noise would be less than significant.

On-Site Operational Noise

Less-Than-Significant Impact. As described in greater detail in Section 1 (Project Description), the principal use of the proposed project would be for transferring goods or breaking down and assembling tractor-trailer transportation. The proposed project would include construction of a new building for warehouse/office use, 6 loading docks located on the west side of that structure, 102 parking spaces for the proposed warehouse/office use, 475 spaces for cargo containers and designated exterior and interior areas for the unloading and loading of goods between containers. The warehouse/office building (which would have a total building area of approximately 53,550 square feet and a height of approximately 42 feet) would face the Main Street frontage; the building (as well as the surrounding 8-foot high boundary walls) would act as a visual and acoustical screen for future developments on properties located to the east of this site and to the surrounding areas. In so doing, the building would also visually and acoustically screen proposed project activities, including truck maneuvering and loading/unlading activities.

The implementation of the Project would result in changes to existing noise levels on the Project site by developing new stationary sources of noise, including introduction of outdoor heating, ventilation and air conditioning (HVAC) equipment, and vehicle parking lot and truck loading dock activities. These sources may affect noise-sensitive vicinity land uses off the Project site. The following analysis evaluates noise from exterior mechanical equipment and activities associated with vehicle parking lots and truck loading docks. The analysis is based upon in-house spreadsheets which incorporate standard industry calculations for the sum of noise from multiple sources, outdoor attenuation with distance from the noise source(s), and attenuation from barrier placement between source(s) and receiver(s), as provided in Attachment D.

Outdoor Mechanical Equipment

The proposed warehouse space overall would not be served by heating or air conditioning equipment. However, the floor plan includes an office space at the northern side of the building. The proposed office area on the site plan is indicated to have floor area of approximately 14,050 square feet. Based on information provided by the applicant, it is anticipated that the office space would be equipped with single-packaged rooftop HVAC units with air-handling capacity of 20 to 60 nominal tons. For the analysis of noise from HVAC equipment operation, a Carrier WeatherMaker® A HVAC unit was used as a reference.

Noise level data provided by the manufacturer was used to determine the noise levels which would be generated by the HVAC equipment. The Carrier WeatherMaker® A package HVAC unit has a sound level rating of 77 dBA at 10 feet (Carrier Corporation 2019). Based on the warehouse/office roof design provided, there will be a 6-foot high parapet extending along the perimeter of the office roof.

Assuming that the HVAC equipment is operating for a minimum period of one hour, the worst-case calculated noise levels at the nearest residential property line (to the east) and the southernmost commercial property line (to the south) are presented in Table 9. The calculation was performed at the worst-case location of each of the the two subject property lines - that is, the closest distance between the potential office location, and the adjacent property lines to the east and south, to ensure that the shortest distance from equipment to property line was examined. The results of these calculations are also presented in Table 9. The maximum hourly noise level for the HVAC equipment operating at each examined point along the property would range from approximately 38 dBA L_{eq} at the southerly (commercial) property boundary, to 40 dBA L_{eq} at the nearest

eastern (residential) property boundary. These levels are less than the City of Carson Code of Ordinances noise standards for commercial (60 dBA L_{eq} daytime (7a.m. to 10 p.m.), 55 dBA L_{eq} nighttime (10 p.m. to 7a.m.) and residential (50 dBA L_{eq} daytime (7a.m. to 10 p.m.), 45 dBA L_{eq} nighttime (10 p.m. to 7a.m.) and are well below the measured ambient noise levels in the Project area.

Table 9. Mechanical Equipment (HVAC) Noise

Equipment	Noise Level at Property Boundary	
	Property Line	Average Noise Level (dBA L_{eq})
HVAC	East	40
HVAC	South	38

Source: Attachment D

The results of the mechanical equipment operations noise analysis indicate that the proposed Project would comply with the City of Carson Municipal Code noise ordinance. Mechanical equipment operation would result in noise at the Project site property boundaries / nearest noise-sensitive receiver boundaries that are less than the applicable noise standards, and are thus less than significant.

Parking Lot Activity

A comprehensive study of noise levels associated with surface parking lots was published in the Journal of Environmental Engineering and Landscape Management (Volume 12, Issue 2, 2004). The study found that average noise levels during the peak period of use of the parking lot (generally in the morning with arrival of commuters, and in the evening with the departure of commuters), was 47 dBA at 1 meter (3.28 feet) from the outside boundary of the parking lot. The parking area would function as a point source for noise, which means that noise would attenuate at a rate of 6 dBA with each doubling of distance. The employee parking lot is proposed to be situated on the north and east sides of the warehouse building, no closer than 25 feet from the easterly[1] property line of the Project site (and approximately 125 feet from the edge of the parking lot to the nearest residences to the east). At a distance of 25 feet, parking lot noise levels would be no greater than 30 dBA L_{eq} at the eastern property line, and approximately 15 dBA L_{eq} at the nearest residential area. This noise level (even without accounting for the surrounding 8-foot high boundary walls) would be well below both the noise levels from the project-related HVAC equipment operation at the residential area to the east (40 dBA L_{eq}). Adding together the parking lot noise (15 dBA L_{eq}) and the HVAC equipment level (40 dBA L_{eq}), the combined noise level would be 40 dBA L_{eq} which is less than the City of Carson residential exposure limits of 50 dBA Leq daytime (7a.m. to 10 p.m.), 45 dBA Leq nighttime (10 p.m. to 7a.m.)

Truck Loading Dock / Truck Yard Activity

The parking lot study (Journal of Environmental Engineering and Landscape Management (Volume 12, Issue 2, 2004) also examined noise levels associated with cargo truck delivery activity. The study concluded that average noise levels from truck loading/unloading areas was 96 dBA at one meter (3.28

[1] No noise-sensitive land uses exist to the north of the project site; thus, the easterly project boundary is the critical location.

feet) from the boundary of the truck activity area. Truck loading docks would be located not closer than 340 feet from the nearest residential property line (located to the east), and 155 feet from the southern property line. Using the outdoor attenuation rate of 6 dBA with each doubling of distance, truck loading activity at residences to the east would produce noise levels of approximately 56 dBA L_{eq} while noise levels along the southern property boundary from truck loading activity would average 63 dBA L_{eq}. However, the proposed warehouse/office building would provide a substantial amount of noise reduction by blocking the direct line-of-sight between the truck loading dock area and the residences to the east. Because of the height and size of the building, it is estimated that the noise from loading dock activities would be reduced by approximately 22 dB or more. Thus, the loading dock noise at the nearest residences would be approximately 34 dBA L_{eq}, which would be well below the City of Carson's residential exposure limits of 50 dBA L_{eq} daytime (7a.m. to 10 p.m.), 45 dBA L_{eq} nighttime (10 p.m. to 7a.m.).

At the commercial property boundary to the south, the estimated noise level would be exceeded in the absence of the 8-foot high boundary wall; however, the wall would provide approximately 12 dB noise reduction near the project's southern boundary. The resulting noise level would be approximately 51 dBA L_{eq}, which would be less than the City of Carson daytime (7a.m. to 10 p.m.) noise standard for commercial land use of 60 dBA L_{eq}, as well as the nighttime (10 p.m. to 7 a.m.) noise standard of 55 dBA L_{eq}.

In summary, the Project would have operational noise levels less than the applicable noise standards. Consequently, operational noise impacts would be less than significant.

b) Would the project result in generation of excessive groundborne vibration or groundborne noise levels?

Less than significant Impact. During operation, no major sources of groundborne vibration are anticipated. Construction activities that might expose persons to excessive ground-borne vibration or ground-borne noise could cause a potentially significant impact. Ground-borne vibration information related to construction activities (including demolition) has been collected by Caltrans (Caltrans 2013b). Information from Caltrans indicates that continuous vibrations with a peak particle velocity of approximately 0.1 inches per second begin to annoy people. The heavier pieces of construction equipment, such as bulldozers, would have peak particle velocities of approximately 0.089 inches per second or less at a distance of 25 feet (DOT 2018). Ground-borne vibration is typically attenuated over short distances. At the distance from the nearest vibration-sensitive receivers (residences located to the east, and two churches to the south) to where construction activity would be occurring on the project site (approximately 110 feet), and with the anticipated construction equipment, the peak particle velocity vibration level would be approximately 0.0096 inches per second. At the closest sensitive receptors, vibration levels would be well below the vibration threshold of potential annoyance of 0.1 inches/second; therefore, impacts associated with vibration-generated annoyance would be less than significant.

The major concern with regards to construction vibration is related to building damage, which typically occurs at vibration levels of 0.5 inches per second or greater for buildings of reinforced-concrete, steel or timber construction. As discussed above, the highest anticipated vibration levels associated with on-site project construction would be approximately 0.0096 inches per second, which are well below the threshold of 0.5 inches per second for building damage. Therefore, impacts associated with vibration-produced damage would be less than significant.

c) For a project located within the vicinity of a private airstrip or an airport land use plan or, where such a plan has not been adopted, within two miles of a public airport or public use airport, would the project expose people residing or working in the project area to excessive noise levels?

No Impact. The project site is not located within the vicinity of private airstrip. Additionally, the closest public airport to the project site is the Compton/Woodley Airport, which is located approximately 3.6 miles northeast of the project site. According to the Los Angeles County Airport Land Use Commission, the project is not located within the airport land use plan for this or other nearby airports. In addition, the Noise Contour Map provides the 65 CNEL contours of the nearby airports, which are located more than 3 miles from the project site (ALUC 2019). Therefore, no impacts associated with airport and aircraft noise would occur.

5 Conclusions

The analysis of potential impacts from the proposed project included noise from both short-term construction and long-term operation, as well as project-related groundborne vibration, and exposure from nearby airports or airstrips. It was determined that short-term construction noise levels would be higher than ambient noise levels in the area, and would exceed the City of Carson construction noise standard. Therefore, mitigation would be required to avoid a potentially significant short-term construction noise impact at the single-family residences east of the project site, and at the churches to the south. With implementation of the provided construction noise mitigation measures, the impact from construction noise would be less than significant. Long-term operational noise levels from traffic noise as well as on-site mechanical noise, parking lot noise and truck loading dock / truck yard activities were also assessed, and were determined to be less than significant. Groundborne vibration impacts were also determined to be less than significant. Finally, the project site is not located within the vicinity of private airstrip, and the project is not located within the airport land use plan for nearby airports. Therefore, no impacts associated with airport and aircraft noise would occur.

6 References

ALUC (Airport Land Use Commission). 2019. GIS Interactive Map (A-Net). Accessed October 1, 2019. http://planning.lacounty.gov/assets/obj/anet/Main.html.

Caltrans (California Department of Transportation). 2013a. Technical Noise Supplement to the Caltrans Traffic Noise Analysis Protocol. Division of Environmental Analysis, Environmental Engineering, Hazardous Waste, Air, Noise, Paleontology Office. September 2013.

Caltrans. 2013b. Transportation and Construction Vibration Guidance Manual. Division of Environmental Analysis, Environmental Engineering, Hazardous Waste, Air, Noise, Paleontology Office. September, 2013.

City of Carson. 2004. City of Carson General Plan. Adopted October 11, 2004. http://ci.carson.ca.us/content/files/pdfs/planning/CityofCarsonGeneralPlan.pdf.

Courier Corporation. 2019. Product Data, WeatherMaker® A Packaged Rooftop Units, 20 to 60 Nominal Tons. Accessed October 2, 2019. https://www.utcccs-cdn.com/hvac/docs/1005/Public/09/48_50A-19PD.pdf

DOT (U.S. Department of Transportation). 2018. Transit Noise and Vibration Impact Assessment Manual. DOT, Federal Transit Administration. September 2018.

Dudek. 2019. Air Quality and Greenhouse Gas Emissions Analysis Technical Report, Truck Facility Specific Plan Project. September 2019.

FHWA (Federal Highway Administration). Roadway Construction Noise Model (RCNM) (2008).

FHWA. 2004. FHWA Traffic Noise Model, Version 2.5. Office of Environment and Planning. Washington, DC. February.

FTA (Federal Transit Administration). 2018. *Transit Noise & Vibration Impact Assessment Manual.* U.S. Department of Transportation, Federal Transit Administration. September 2018.

Pranas Baltrėnas , Dainius Kazlauskas & Egidijus Petraitis (2004) Testing on noise levels prevailing at motor vehicle parking lots and numeral simulation of its dispersion, Journal of Environmental Engineering and Landscape Management, 12:2, 63-70

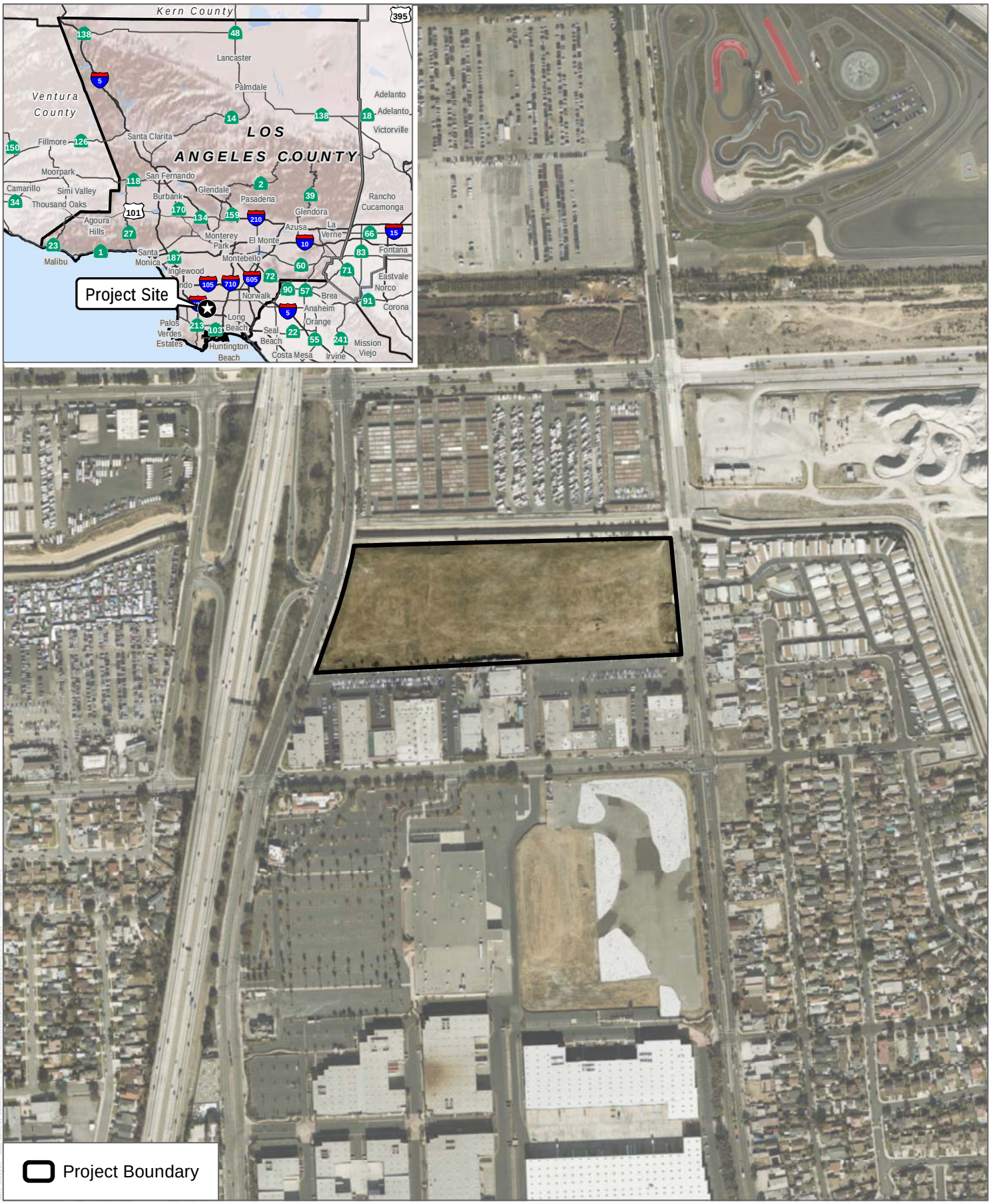

SOURCE: ESRI 2018

DUDEK

0 250 500 Feet
0 70 140 Meters
1:6,000

FIGURE 1

Project Location

KL Fenix Truck Terminal Project

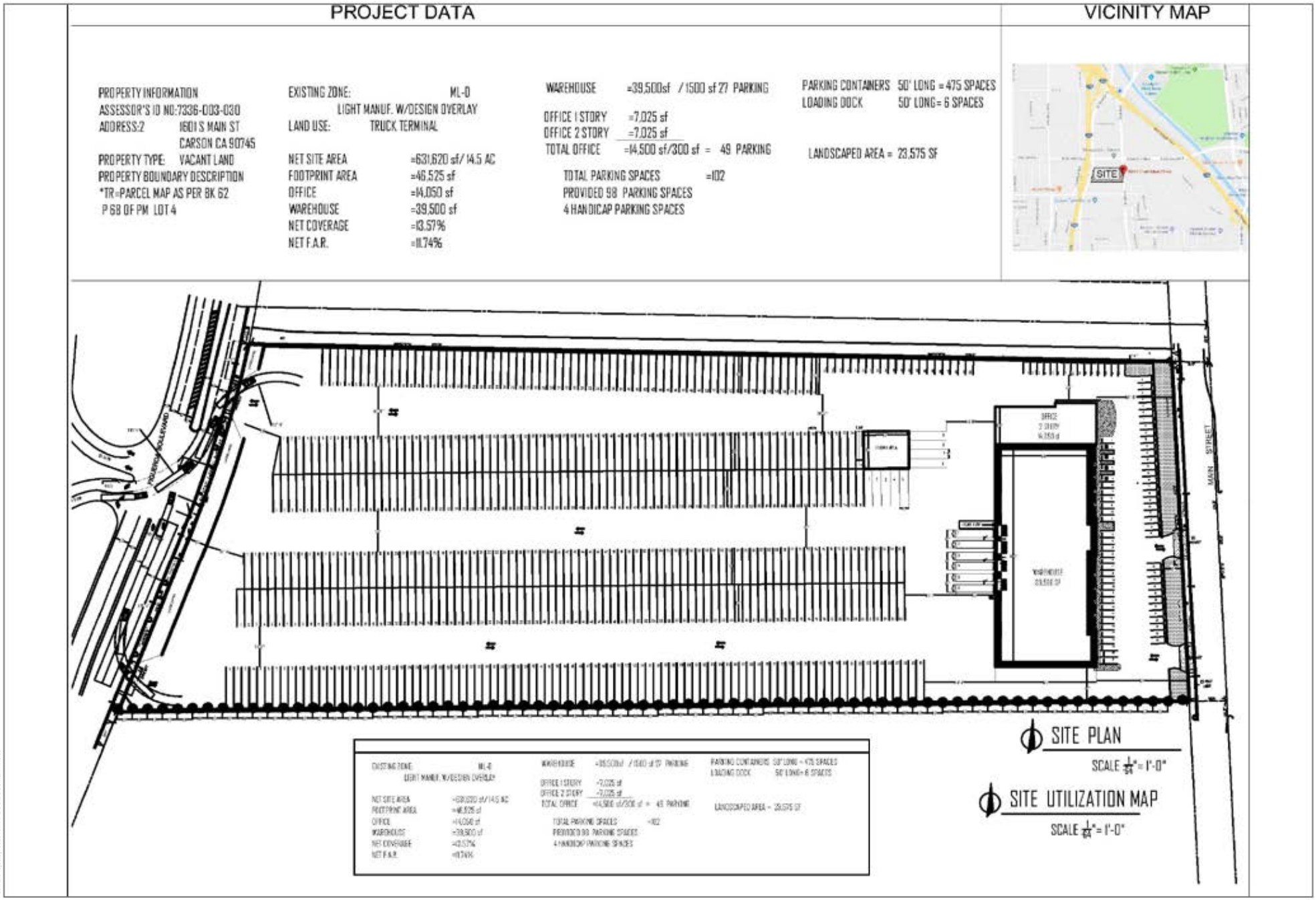

SOURCE: KL Fenix Corp., 2018

FIGURE 2

Conceptual Site Plan

KL Fenix Truck Terminal Project

DUDEK

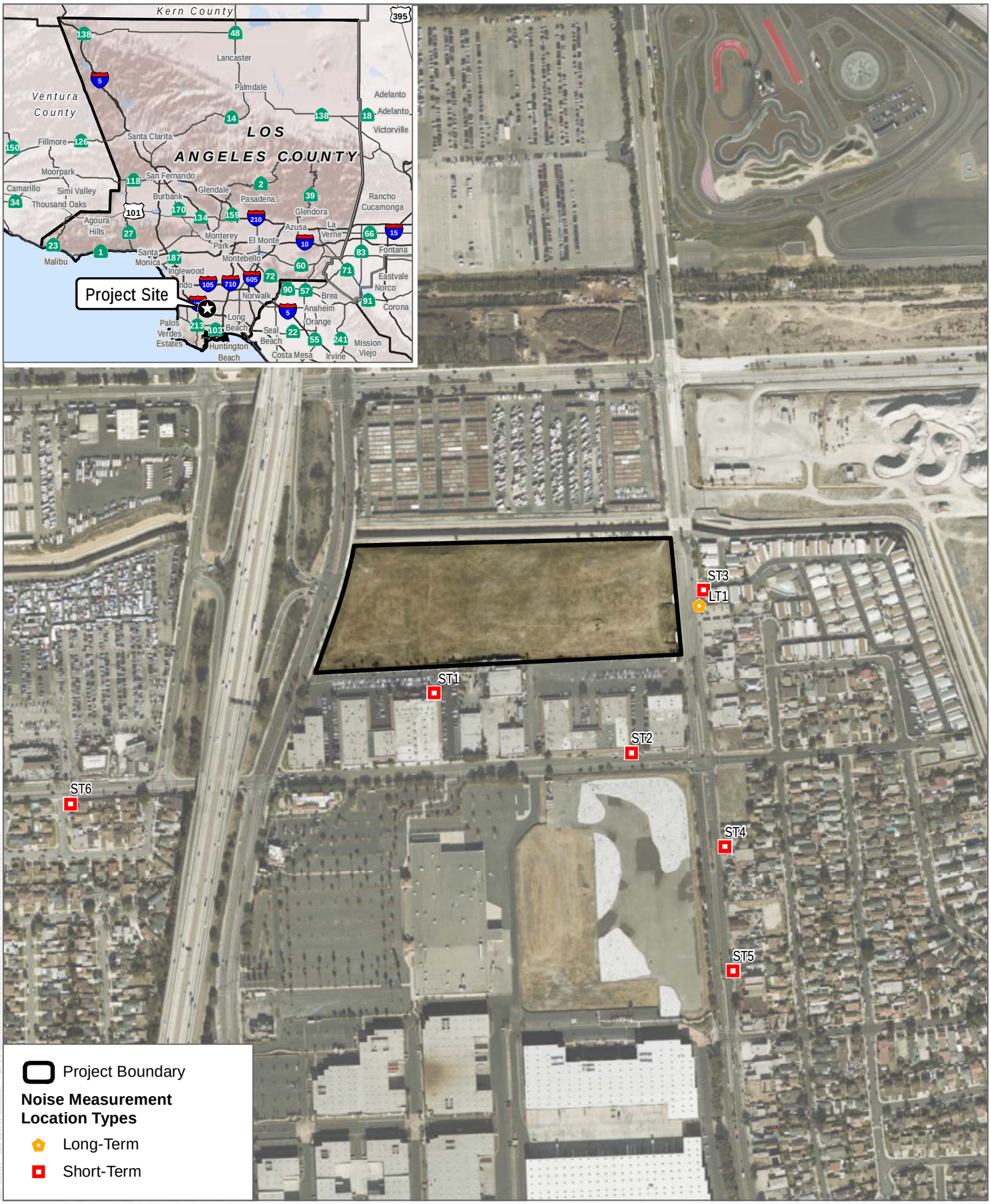

SOURCE: ESRI 2018

DUDEK

0 250 500 Feet
0 70 140 Meters
1:6,000

FIGURE 3

Noise Measurement Locations

KL Fenix Truck Terminal Project

Attachment A

Field Noise Data Sheets

(LT)

FIELD NOISE MEASUREMENT DATA

DUDEK

PROJECT CANYON KL FENIX — PROJECT # 10029-10
SITE ID
SITE ADDRESS — OBSERVER(S) PETE VITAR
START DATE 8/13/19 — END DATE 8/14/19
START TIME — END TIME

METEOROLOGICAL CONDITIONS
TEMP ____ F — HUMIDITY ____ % R.H. — WIND CALM LIGHT MODERATE
WINDSPD ____ MPH — DIR. N NE S SE S SW W NW — VARIABLE STEADY GUSTY
SKY SUNNY CLEAR OVRCAST PRTLY CLDY FOG RAIN

ACOUSTIC MEASUREMENTS
MEAS. INSTRUMENT PICCOLO SLM-3 — TYPE 1 2 — SERIAL # 13092704G
CALIBRATOR BSWA CA 114 — SERIAL # 48015I
CALIBRATION CHECK — PRE-TEST ____ dBA SPL — POST-TEST ____ dBA SPL — WINDSCRN YES

SETTINGS A-WTD (SLOW) FAST FRONTAL RANDOM ANSI OTHER: ____

	REC. #	BEGIN	END	Leq	Lmax	Lmin	L90	L50	L10	OTHER (SPECIFY METRIC
(LT-1)	1-104	9:12 (8/13)	11:02 (8/14)							

COMMENTS
READING TAKEN 20600 MAIN ST (VISTA DEL LUNA MOBILE HOME PARK), AT WEST END OF PROPERTY; PRIMARY NOISE SOURCE IS TRAFFIC ON MAIN STREET;

SOURCE INFO AND TRAFFIC COUNTS
PRIMARY NOISE SOURCE (TRAFFIC) AIRCRAFT RAIL INDUSTRIAL OTHER: ____
ROADWAY TYPE: ASPHALT — DIST. TO RDWY C/L OR (EOP): 20'
TRAFFIC COUNT DURATION: ____ MIN — SPEED ____ MIN — SPEED

COUNT 1 (OR RDWY 1) DIRECTION	NB/EB	SB/WB	NB/EB	SB/WB	IF COUNTING BOTH DIRECTIONS AS ONE, CHECK HERE	COUNT 2 (OR RDWY 2)	NB/EB	SB/WB	NB/EB	SB/WB
AUTOS										
MED TRKS										
HVY TRKS										
BUSES										
MOTRCLS										

SPEEDS ESTIMATED BY: RADAR / DRIVING THE PACE
POSTED SPEED LIMIT SIGNS SAY:

OTHER NOISE SOURCES (BACKGROUND): DIST. AIRCRAFT RUSTLING LEAVES DIST. BARKING DOGS BIRDS DIST. INDUSTRIAL
DIST. KIDS PLAYING DIST. CONVRSTNS / YELLING DIST. TRAFFIC (LIST RDWYS BELOW) DISTD GARDENERS/LANDSCAPING NOISE
OTHER: ____

DESCRIPTION / SKETCH
TERRAIN HARD SOFT (MIXED) FLAT OTHER: ____
PHOTOS 5397; 5398; 5399; 5400; 5401; 5402;
OTHER COMMENTS / SKETCH

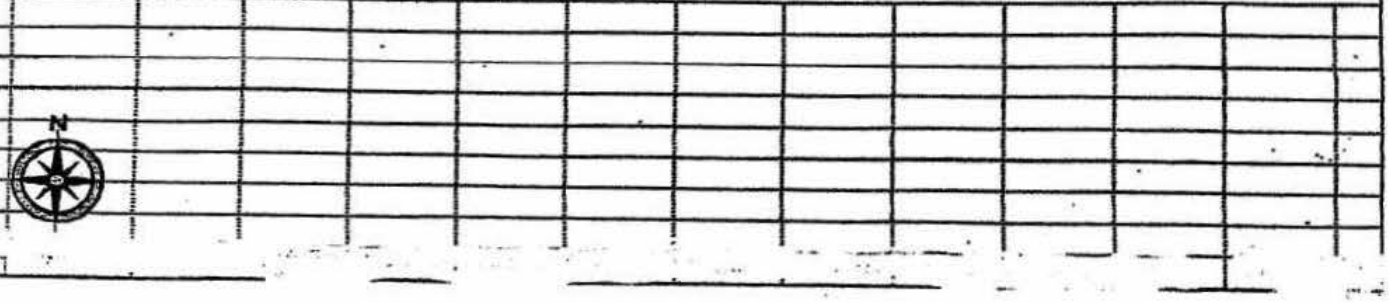

(ST)

DUDEK

FIELD NOISE MEASUREMENT DATA

PROJECT CARSON KL FENIX — PROJECT # 10029-10
SITE ID
SITE ADDRESS — OBSERVER(S) PEYE VITAR
START DATE 8/13/14 — END DATE 8/13/14
START TIME — END TIME

METEOROLOGICAL CONDITIONS
TEMP 70 F — HUMIDITY 71 % R.H. — WIND (CALM) LIGHT MODERATE
WINDSPD ___ MPH — DIR. N NE S SE S SW W NW — VARIABLE STEADY GUSTY
SKY (SUNNY) (CLEAR) — OVRCAST PRTLY CLDY FOG — RAIN

ACOUSTIC MEASUREMENTS
MEAS. INSTRUMENT PICCOLO SLM-3 — TYPE 1 2 — SERIAL # 14031004
CALIBRATOR DSWA CA 114 — SERIAL # 480151
CALIBRATION CHECK — PRE-TEST ___ dBA SPL — POST-TEST ___ dBA SPL — WINDSCRN YES

SETTINGS — A-WTD (SLOW) FAST — FRONTAL RANDOM ANSI — OTHER:

	REC. #	BEGIN	END	Leq	Lmax	Lmin	L90	L50	L10	OTHER (SPECIFY METRIC
ST-1	1-2	9:48	10:03	65.5	71.3	61.8				

COMMENTS
READING TAKEN AT NW/NEAST CORNER OF BUILDING AT 415 W TORRANCE BLVD (CHURCH), IN PARKING LOT; PRIMARY NOISE SOURCE IS TRAFFIC ON NB 110 FWY AND ON FIGUEROA ST,

SOURCE INFO AND TRAFFIC COUNTS
PRIMARY NOISE SOURCE (TRAFFIC) AIRCRAFT RAIL INDUSTRIAL OTHER:
ROADWAY TYPE: ASPHALT — DIST. TO RDWY C/L OR (EOP): APX 550' TO FIGUEROA ST EOP
TRAFFIC COUNT DURATION: — MIN — SPEED ___ MIN SPEED

COUNT 1 (OR RDWY 1) DIRECTION	NB/EB	SB/WB	NB/EB	SB/WB	IF COUNTING BOTH DIRECTIONS AS ONE, CHECK HERE —	COUNT 2 (OR RDWY 2)	NB/EB	SB/WB	NB/EB	SB/WB
AUTOS										
MED TRKS										
HVY TRKS										
BUSES										
MOTRCLS										

SPEEDS ESTIMATED BY: RADAR / DRIVING THE PACE
POSTED SPEED LIMIT SIGNS SAY:

OTHER NOISE SOURCES (BACKGROUND): DIST. AIRCRAFT RUSTLING LEAVES DIST. BARKING DOGS BIRDS DIST. INDUSTRIAL
DIST. KIDS PLAYING DIST. CONVRSTNS / YELLING (DIST. TRAFFIC (LIST RDWYS BELOW)) DISTD GARDENERS/LANDSCAPING NOISE
OTHER: 110 FWY

DESCRIPTION / SKETCH
TERRAIN HARD SOFT (MIXED) FLAT OTHER:
PHOTOS 5404; 5405; 5406; 5407; 5408;
OTHER COMMENTS / SKETCH



(ST)

FIELD NOISE MEASUREMENT DATA

DUDEK

PROJECT CARSON RL FENIX PROJECT # 10029-10
SITE ID
SITE ADDRESS OBSERVER(S) PEYE VITAR
START DATE 8/13/14 END DATE 8/13/14
START TIME END TIME

METEOROLOGICAL CONDITIONS
TEMP 73 F HUMIDITY 65 % R.H. WIND (CALM) LIGHT MODERATE
WINDSPD MPH DIR. N NE S SE S SW W NW VARIABLE STEADY GUSTY
SKY (SUNNY) (CLEAR) OVRCAST PRTLY CLDY FOG RAIN

ACOUSTIC MEASUREMENTS
MEAS. INSTRUMENT PICCOLO SLM-3 TYPE 1 2 SERIAL # 140317004
CALIBRATOR BSWA CA 114 SERIAL # 480151
CALIBRATION CHECK PRE-TEST dBA SPL POST-TEST dBA SPL WINDSCRN YES

SETTINGS A-WTD (SLOW) FAST FRONTAL RANDOM ANSI OTHER:

REC #	BEGIN	END	Leq	Lmax	Lmin	L90	L50	L10	OTHER (SPECIFY METRIC
(ST-2) 3-4	10:11	10:26	70.6	84.4	54.3				

COMMENTS
READING TAKEN IN FRONT OF 225 N. TORRANCE BLVD (SCHOOL/CHURCH); PRIMARY NOISE SOURCE IS TRAFFIC ON W. TORRANCE BLVD;

SOURCE INFO AND TRAFFIC COUNTS
PRIMARY NOISE SOURCE (TRAFFIC) AIRCRAFT RAIL INDUSTRIAL OTHER:
ROADWAY TYPE: ASPHALT DIST. TO RDWY C/L OR (EOP): 8'
TRAFFIC COUNT DURATION: 15 MIN SPEED ___ MIN SPEED

	DIRECTION	NB/EB	SB/WB	NB/EB	SB/WB		NB/EB	SB/WB	NB/EB	SB/WB
COUNT 1 (OR RDWY 1)	AUTOS	139				IF COUNTING BOTH DIRECTIONS AS ONE, CHECK HERE ✓				
	MED TRKS	2								
	HVY TRKS	2								
	BUSES	0								
	MOTRCLS	1								

COUNT 2 (OR RDWY 2)

SPEEDS ESTIMATED BY: RADAR / DRIVING THE PACE
POSTED SPEED LIMIT SIGNS SAY:

OTHER NOISE SOURCES (BACKGROUND): DIST. AIRCRAFT RUSTLING LEAVES DIST. BARKING DOGS BIRDS DIST. INDUSTRIAL
DIST. KIDS PLAYING DIST. CONVRSTNS / YELLING DIST. TRAFFIC (LIST RDWYS BELOW) DISTD GARDENERS/LANDSCAPING NOISE
OTHER:

DESCRIPTION / SKETCH
TERRAIN (HARD) SOFT MIXED FLAT OTHER:
PHOTOS 5410; 5411; 5412; 5413;
OTHER COMMENTS / SKETCH



(ST)

FIELD NOISE MEASUREMENT DATA

DUDEK

PROJECT CANYON AT FENIX — PROJECT # 10029-10
SITE ID
SITE ADDRESS — OBSERVER(S) PEYE VITAR
START DATE 8/13/14 — END DATE 8/13/14
START TIME — END TIME

METEOROLOGICAL CONDITIONS
TEMP 74 F — HUMIDITY 64 % R.H. — WIND (CALM) LIGHT MODERATE
WINDSPD MPH — DIR. N NE S SE S SW W NW — VARIABLE STEADY GUSTY
SKY (SUNNY) (CLEAR) — OVRCAST PRTLY CLDY FOG — RAIN

ACOUSTIC MEASUREMENTS
MEAS. INSTRUMENT PICCOLO SLM-3 — TYPE 1 2 — SERIAL # 140317004
CALIBRATOR B&K CA 114 — SERIAL # 480151
CALIBRATION CHECK — PRE-TEST dBA SPL — POST-TEST dBA SPL — WINDSCRN YES

SETTINGS — A-WTD (SLOW) FAST — FRONTAL RANDOM ANSI — OTHER:

REC. #	BEGIN	END	Leq	Lmax	Lmin	L90	L50	L10	OTHER (SPECIFY METRIC
(ST-3) S-6	10:35	10:50	71.5	82.7	59.5				

COMMENTS
READING TAKEN IN FRONT OF 20830 MAIN ST (RESIDENTIAL); PRIMARY NOISE SOURCE IS TRAFFIC ON MAIN ST;

SOURCE INFO AND TRAFFIC COUNTS
PRIMARY NOISE SOURCE (TRAFFIC) AIRCRAFT RAIL INDUSTRIAL OTHER:
ROADWAY TYPE: ASPHALT — DIST. TO RDWY C/L OR (EOP): 10

TRAFFIC COUNT DURATION: 15 MIN — SPEED ___ MIN

COUNT 1 (OR RDWY 1) DIRECTION	NB/EB	SB/WB	NB/EB SPEED	SB/WB SPEED
AUTOS	171			
MED TRKS	8			
HVY TRKS	6			
BUSES	0			
MOTRCLS	0			

IF COUNTING BOTH DIRECTIONS AS ONE, CHECK HERE ✓

COUNT 2 (OR RDWY 2)	NB/EB	SB/WB	NB/EB SPEED	SB/WB SPEED

SPEEDS ESTIMATED BY: RADAR / DRIVING THE PACE
POSTED SPEED LIMIT SIGNS SAY:

OTHER NOISE SOURCES (BACKGROUND): DIST. AIRCRAFT RUSTLING LEAVES DIST. BARKING DOGS BIRDS DIST. INDUSTRIAL
DIST. KIDS PLAYING DIST. CONVRSTNS / YELLING DIST. TRAFFIC (LIST RDWYS BELOW) DISTD GARDENERS/LANDSCAPING NOISE
OTHER:

DESCRIPTION / SKETCH
TERRAIN HARD SOFT (MIXED) FLAT OTHER:
PHOTOS 5415; 5416; 5417; 5418;
OTHER COMMENTS / SKETCH

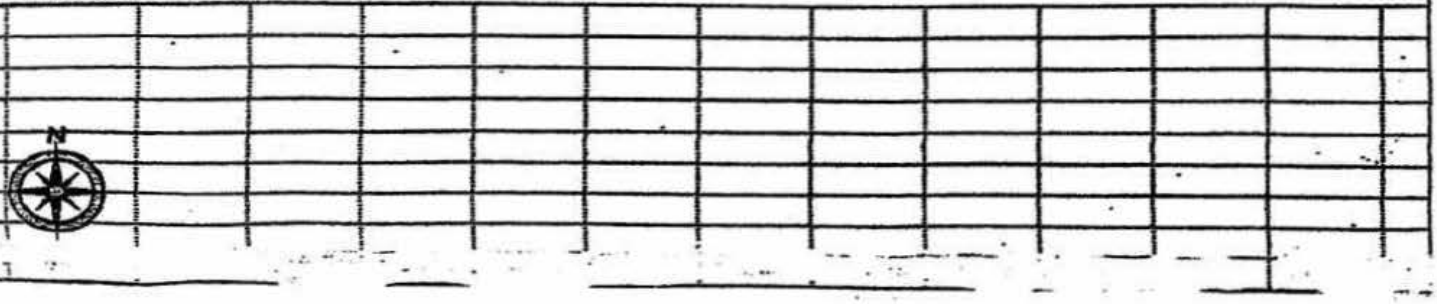

(ST)

FIELD NOISE MEASUREMENT DATA

DUDEK

PROJECT CANYON RL FENIX — PROJECT # 10029-10
SITE ID
SITE ADDRESS — OBSERVER(S) PEYE VITAR
START DATE 8/13/14 — END DATE 8/13/14
START TIME — END TIME

METEOROLOGICAL CONDITIONS
TEMP 76 F — HUMIDITY 60 % R.H. — WIND (CALM) LIGHT MODERATE
WINDSPD — MPH — DIR. N NE E SE S SW W NW — VARIABLE STEADY GUSTY
SKY (SUNNY) (CLEAR) — OVRCAST PRTLY CLDY FOG RAIN

ACOUSTIC MEASUREMENTS
MEAS. INSTRUMENT PICCOLO SLM-3 — TYPE 1 2 — SERIAL # 140317004
CALIBRATOR 1356/A CA 114 — SERIAL # 480151
CALIBRATION CHECK — PRE-TEST ____ dBA SPL — POST-TEST ____ dBA SPL — WINDSCRN YES

SETTINGS — A-WTD (SLOW) FAST — FRONTAL RANDOM ANSI — OTHER:

REC. #	BEGIN	END	Leq	Lmax	Lmin	L90	L50	L10	OTHER (SPECIFY METRIC
(ST-4) 7-8	11:08	11:23	72.3	82.5	62.7				

COMMENTS
READING TAKEN IN FRNT OF 20832 MAIN ST. (RESIDENTIAL); PRIMARY NOISE SOURCE IS TRAFFIC ON MAIN ST; SECONDARY IS COMPRESSOR NOISE FROM NEXT DOOR AUTO REPAIR SHOP (20836 MAIN ST)

SOURCE INFO AND TRAFFIC COUNTS
PRIMARY NOISE SOURCE (TRAFFIC) AIRCRAFT RAIL INDUSTRIAL OTHER:
ROADWAY TYPE: ASPHALT — DIST. TO RDWY C/L OR (EOP): 12'
TRAFFIC COUNT DURATION: 15 MIN — SPEED — ____ MIN — SPEED

COUNT 1 (OR RDWY 1) DIRECTION	NB/EB	SB/WB	NB/EB SPEED	SB/WB SPEED
AUTOS	214			
MED TRKS	7			
HVY TRKS	5			
BUSES	1			
MOTRCLS	0			

IF COUNTING BOTH DIRECTIONS AS ONE, CHECK HERE ✓

COUNT 2 (OR RDWY 2)	NB/EB	SB/WB	NB/EB SPEED	SB/WB SPEED

SPEEDS ESTIMATED BY: RADAR / DRIVING THE PACE
POSTED SPEED LIMIT SIGNS SAY:

OTHER NOISE SOURCES (BACKGROUND): DIST. AIRCRAFT RUSTLING LEAVES DIST. BARKING DOGS BIRDS DIST. INDUSTRIAL
DIST. KIDS PLAYING DIST. CONVRSTNS / YELLING DIST. TRAFFIC (LIST RDWYS BELOW) DISTD GARDENERS/LANDSCAPING NOISE
(OTHER:) AIR COMPRESSOR RUNNING AT NEXT DOOR AUTO REPAIR SHOP

DESCRIPTION / SKETCH
TERRAIN HARD SOFT (MIXED) FLAT OTHER:
PHOTOS ~~5419;~~ 5420; 5421; 5422; 5423; 5424;
OTHER COMMENTS / SKETCH



(ST)

FIELD NOISE MEASUREMENT DATA

DUDEK

PROJECT: CANYON AT FENIX — PROJECT #: 10029-10
SITE ID:
SITE ADDRESS:
OBSERVER(S): PEYE VITAR
START DATE: 8/13/14 — END DATE: 8/13/14
START TIME: — END TIME:

METEOROLOGICAL CONDITIONS
TEMP: 76 F — HUMIDITY: 60 % R.H. — WIND: (LIGHT) MODERATE
WINDSPD: 9 MPH — DIR. N NE E SE S SW W NW — VARIABLE STEADY GUSTY
SKY: (SUNNY) (CLEAR) — OVRCAST PRTLY CLDY FOG RAIN

ACOUSTIC MEASUREMENTS
MEAS. INSTRUMENT: PICCOLO SLM-3 — TYPE 1 2 — SERIAL #: 140317004
CALIBRATOR: DSWA CA 114 — SERIAL #: 480151
CALIBRATION CHECK — PRE-TEST: ____ dBA SPL — POST-TEST: ____ dBA SPL — WINDSCRN: YES

SETTINGS: A-WTD (SLOW) FAST FRONTAL RANDOM ANSI OTHER:

REC. #	BEGIN	END	Leq	Lmax	Lmin	L90	L50	L10	OTHER (SPECIFY METRIC
(ST-5) 9-10	11:43	11:58	72.7	84.4	57.8				

COMMENTS: READING TAKEN IN FRONT OF 20926 MAIN ST (CHURCH); PRIMARY NOISE SOURCE IS TRAFFIC ON MAIN ST;

SOURCE INFO AND TRAFFIC COUNTS
PRIMARY NOISE SOURCE: (TRAFFIC) AIRCRAFT RAIL INDUSTRIAL OTHER:
ROADWAY TYPE: ASPHALT — DIST. TO RDWY C/L OR (EOP): 6'

TRAFFIC COUNT DURATION: 15 MIN — SPEED

COUNT 1 (OR RDWY 1)	DIRECTION	NB/EB	SB/WB	NB/EB SPEED	SB/WB SPEED
	AUTOS	237			
	MED TRKS	4			
	HVY TRKS	3			
	BUSES	1			
	MOTRCLS	0			

IF COUNTING BOTH DIRECTIONS AS ONE, CHECK HERE ✓

COUNT 2 (OR RDWY 2)	NB/EB	SB/WB	NB/EB SPEED	SB/WB SPEED

SPEEDS ESTIMATED BY: RADAR / DRIVING THE PACE
POSTED SPEED LIMIT SIGNS SAY:

OTHER NOISE SOURCES (BACKGROUND): DIST. AIRCRAFT RUSTLING LEAVES DIST. BARKING DOGS BIRDS DIST. INDUSTRIAL
DIST. KIDS PLAYING DIST. CONVRSTNS / YELLING DIST. TRAFFIC (LIST RDWYS BELOW) DISTD GARDENERS/LANDSCAPING NOISE
OTHER:

DESCRIPTION / SKETCH
TERRAIN: (HARD) SOFT MIXED FLAT OTHER:
PHOTOS: 5426; 5427; 5428; 5429;
OTHER COMMENTS / SKETCH

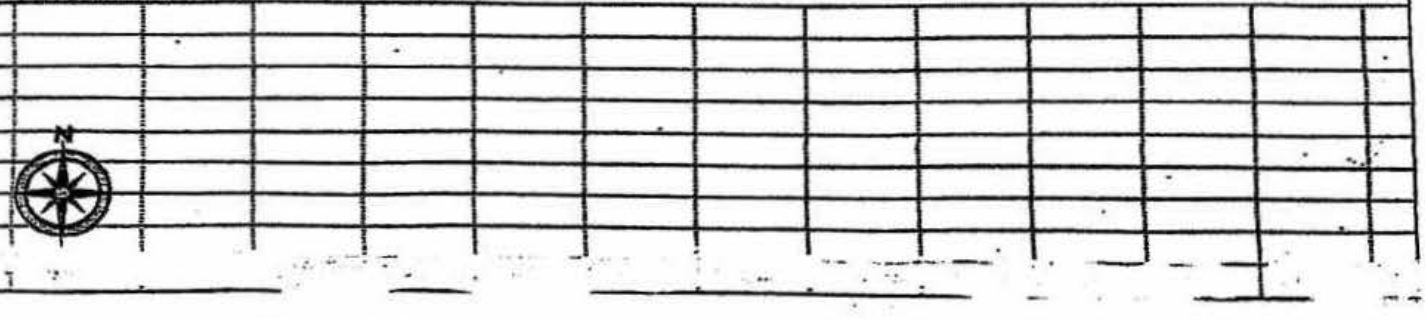

(ST)

FIELD NOISE MEASUREMENT DATA

DUDEK

PROJECT CANYON AT FENIX — PROJECT # 10029-10
SITE ID
SITE ADDRESS — OBSERVER(S) PEYE VITAR
START DATE 8/13/19 — END DATE 8/13/19
START TIME — END TIME

METEOROLOGICAL CONDITIONS
TEMP 78 F — HUMIDITY 60 % R.H. — WIND CALM (LIGHT) MODERATE
WINDSPD 9 MPH — DIR. N NE S SE S SW W NW — VARIABLE STEADY GUSTY
SKY (SUNNY) (CLEAR) — OVRCAST PRTLY CLDY FOG RAIN

ACOUSTIC MEASUREMENTS
MEAS. INSTRUMENT PICCOLO SLM-3 — TYPE 1 2 — SERIAL # 14031004
CALIBRATOR BSWA CA 114 — SERIAL # 480151
CALIBRATION CHECK — PRE-TEST ____ dBA SPL — POST-TEST ____ dBA SPL — WINDSCRN YES

SETTINGS A-WTD (SLOW) FAST FRONTAL RANDOM ANSI OTHER:

	REC. #	BEGIN	END	Leq	Lmax	Lmin	L90	L50	L10	OTHER (SPECIFY METRIC
(ST-6)	11-12	12:16	12:31	71.1	94.0	65.1				

COMMENTS
LEADING TAXIS AT NORTHWEST CORNER OF RUNWAY AT 22802 CONRAD AVE (RESIDENTIAL); PRIMARY NOISE SOURCE IS TRAFFIC ON TORRANCE BLVD; SECONDARY IS AIR VENTING FROM BUILDING ACROSS STREET

SOURCE INFO AND TRAFFIC COUNTS
PRIMARY NOISE SOURCE (TRAFFIC) AIRCRAFT RAIL INDUSTRIAL OTHER: PIPE IN
ROADWAY TYPE: ASPHALT — DIST. TO RDWY C/L OR (EOP): 10' TO TORRANCE BLVD EOP
TRAFFIC COUNT DURATION: 15 MIN — SPEED ____ MIN — SPEED

COUNT 1 (OR RDWY 1) DIRECTION	NB/EB	SB/WB	NB/EB SPEED	SB/WB SPEED	IF COUNTING BOTH DIRECTIONS AS ONE, CHECK HERE	COUNT 2 (OR RDWY 2)	NB/EB	SB/WB	NB/EB SPEED	SB/WB SPEED
AUTOS	410									
MED TRKS	5									
HVY TRKS	19									
BUSES	1									
MOTRCLS	1									

SPEEDS ESTIMATED BY: RADAR / DRIVING THE PACE — COUNTS ARE FOR TORRANCE BLVD.
POSTED SPEED LIMIT SIGNS SAY:

OTHER NOISE SOURCES (BACKGROUND): DIST. AIRCRAFT RUSTLING LEAVES DIST. BARKING DOGS BIRDS DIST. INDUSTRIAL
DIST. KIDS PLAYING DIST. CONVRSTNS / YELLING DIST. TRAFFIC (LIST RDWYS BELOW) DISTD GARDENERS/LANDSCAPING NOISE
OTHER: NEARBY GARDENERS; AIR VENTING FROM PIPE IN BUILDING ACROSS STREET

DESCRIPTION / SKETCH
TERRAIN (HARD) SOFT MIXED FLAT OTHER:
PHOTOS 5432; 5433; 5434; 5435; 5436; 5437;
OTHER COMMENTS / SKETCH



(ST)

FIELD NOISE MEASUREMENT DATA

DUDEK

PROJECT CANYON RL FENIX PROJECT # 10029-10
SITE ID
SITE ADDRESS OBSERVER(S) PEYE VITAR
START DATE 8/13/14 END DATE 8/13/14
START TIME END TIME

METEOROLOGICAL CONDITIONS
TEMP 77 F HUMIDITY 57 % R.H. WIND CALM (LIGHT) MODERATE
WINDSPD 4 MPH DIR. N NE S SE S SW W NW VARIABLE STEADY GUSTY
SKY (SUNNY) (CLEAR) OVRCAST PRTLY CLDY FOG RAIN

ACOUSTIC MEASUREMENTS
MEAS. INSTRUMENT PICCOLO SLM-3 TYPE 1 2 SERIAL # 140317004
CALIBRATOR BSWA CA 114 SERIAL # 480151
CALIBRATION CHECK PRE-TEST ____ dBA SPL POST-TEST ____ dBA SPL WINDSCRN YES

SETTINGS A-WTD (SLOW) FAST FRONTAL RANDOM ANSI OTHER:

REC. #	BEGIN	END	Leq	Lmax	Lmin	L90	L50	L10	OTHER (SPECIFY METRIC
(ST-1) 13-14	12:44	12:59	58.9	66.8	56.3				

COMMENTS
LEQ TAKEN IN FRONT OF 21203 LYNTON AVE (RESIDENTIAL);
PRIMARY NOISE SOURCE IS TRAFFIC FROM NEARBY 110 FWY;

SOURCE INFO AND TRAFFIC COUNTS
PRIMARY NOISE SOURCE (TRAFFIC) AIRCRAFT RAIL INDUSTRIAL OTHER:
ROADWAY TYPE: ARTERIAL DIST. TO RDWY C/L OR (EOP): 5'

TRAFFIC COUNT DURATION: 15 MIN

COUNT 1 (OR RDWY 1)

DIRECTION	NB/EB	SB/WB	NB/EB SPEED	SB/WB SPEED
AUTOS	2			
MED TRKS	0			
HVY TRKS	4			
BUSES	0			
MOTRCLS	0			

IF COUNTING BOTH DIRECTIONS AS ONE, CHECK HERE ✓

COUNT 2 (OR RDWY 2) ____ MIN

NB/EB	SB/WB	NB/EB SPEED	SB/WB SPEED

SPEEDS ESTIMATED BY: RADAR / DRIVING THE PACE
POSTED SPEED LIMIT SIGNS SAY:

OTHER NOISE SOURCES (BACKGROUND): DIST. AIRCRAFT RUSTLING LEAVES DIST. BARKING DOGS BIRDS DIST. INDUSTRIAL
DIST. KIDS PLAYING DIST. CONVRSTNS / YELLING (DIST. TRAFFIC (LIST RDWYS BELOW)) DISTD GARDENERS/LANDSCAPING NOISE
OTHER: 110 FWY

DESCRIPTION / SKETCH
TERRAIN HARD SOFT (MIXED) FLAT OTHER:
PHOTOS 5439; 5440; 5441; 5442; 5443
OTHER COMMENTS / SKETCH



Rec 1 to 104	Slow Response		dBA weighting			2.0 dB resolution stats													
Date hh:mm:ss	LeqPeriod	Leq	SEL	Lmax	Lmin	L1%	L5%	L10%	L50%	L90%	L95%	L99%	Lmedian	Lmean	StdDev	L2%	L8%	L25%	
8/13/2019 9:12	15.0 min	71.2	100.7	86	51.3	80	76	74	68	56	54	52	68	66	6.84	76	74	72	
8/13/2019 9:27	15.0 min	75.4	104.9	91.4	50.4	86	82	78	66	54	52	50	66	66.7	8.5	84	80	72	
8/13/2019 9:42	15.0 min	69.7	99.2	82.4	50.6	76	74	74	66	54	52	50	66	64.4	7.23	76	74	70	
8/13/2019 9:57	15.0 min	70.1	99.6	80.6	51.1	78	74	72	66	54	52	50	66	64.8	7.21	76	74	70	
8/13/2019 10:12	15.0 min	69.4	98.9	82.9	50.7	76	74	72	66	54	52	50	66	64.3	6.8	74	72	70	
8/13/2019 10:27	15.0 min	69.8	99.3	81	57.4	76	74	72	66	60	58	58	66	66.2	4.88	76	72	70	
8/13/2019 10:42	15.0 min	69.7	99.2	79.5	59.2	76	74	72	66	62	60	60	66	66.7	4.18	76	72	70	
8/13/2019 10:57	15.0 min	70.6	100.1	81.6	59.3	78	74	74	68	62	60	60	68	67.4	4.59	76	74	70	
8/13/2019 11:12	15.0 min	70.4	99.9	89.6	58.5	76	74	72	68	62	60	60	68	67.1	4.25	74	72	70	
8/13/2019 11:27	15.0 min	69.8	99.3	82.4	59.8	76	74	72	66	62	60	60	66	66.5	4.31	76	72	70	
8/13/2019 11:42	15.0 min	70.6	100.1	86.2	59.1	76	74	72	68	62	62	60	68	67.5	4.18	76	74	70	
8/13/2019 11:57	15.0 min	71.4	100.9	83.2	60.5	78	76	74	68	62	62	60	68	68	4.6	78	74	72	
8/13/2019 12:12	15.0 min	70.5	100	79.9	60.8	76	74	74	68	62	62	60	68	67.7	4.16	76	74	70	
8/13/2019 12:27	15.0 min	71.1	100.6	85.6	60.6	78	74	74	68	64	62	62	68	68.1	4.05	76	74	72	
8/13/2019 12:42	15.0 min	72.2	101.7	87.6	60.7	80	76	74	70	64	62	62	70	68.9	4.25	78	74	72	
8/13/2019 12:57	15.0 min	70.9	100.4	81.3	60.7	78	74	74	68	62	62	60	68	68	4.11	76	74	72	
8/13/2019 13:12	15.0 min	71.1	100.6	82	60.6	78	76	74	68	64	62	60	68	68.2	4.1	76	74	72	
8/13/2019 13:27	15.0 min	70.7	100.2	83.2	56.1	78	74	74	68	60	58	56	68	67.3	4.89	76	74	70	
8/13/2019 13:42	15.0 min	70.6	100.1	81.1	56.1	76	74	74	68	60	58	56	68	67	5.23	76	74	72	
8/13/2019 13:57	15.0 min	70.8	100.3	82.8	56.5	78	74	74	68	60	58	56	68	67	5.38	76	74	72	
8/13/2019 14:12	15.0 min	71	100.5	82.1	58.8	78	74	74	68	60	60	58	68	67.7	4.73	76	74	72	
8/13/2019 14:27	15.0 min	72.3	101.8	88.3	59.3	80	76	74	70	62	62	60	70	69	4.46	78	74	72	
8/13/2019 14:42	15.0 min	71.9	101.4	82.5	59.8	78	76	74	70	62	62	60	70	69	4.37	76	74	72	
8/13/2019 14:57	15.0 min	73.6	103.1	95.1	60.2	80	76	74	70	62	62	60	70	69.1	4.92	78	74	72	
8/13/2019 15:12	15.0 min	71.9	101.4	83.3	60.6	78	76	74	70	62	62	60	70	68.8	4.55	76	74	72	
8/13/2019 15:27	15.0 min	72.8	102.3	87.7	60.3	78	76	74	70	62	62	60	70	69.4	4.68	78	76	72	
8/13/2019 15:42	15.0 min	72.6	102.1	85.2	59.4	78	76	74	70	62	62	60	70	69.5	4.63	78	76	74	
8/13/2019 15:57	15.0 min	71.6	101.1	78.8	59.3	76	74	74	70	62	60	60	70	68.8	4.43	76	74	72	
8/13/2019 16:12	15.0 min	72.9	102.4	85.4	60.1	80	76	74	70	64	62	60	70	69.8	4.44	78	76	72	
8/13/2019 16:27	15.0 min	73.1	102.6	87.6	60.4	80	76	76	70	62	62	60	70	69.8	4.57	78	76	72	
8/13/2019 16:42	15.0 min	73	102.5	83.2	60.4	78	76	76	70	64	62	60	70	70.2	4.33	78	76	74	
8/13/2019 16:57	15.0 min	73.5	103	88.9	58.7	80	76	76	70	64	62	58	70	70.2	4.67	78	76	74	
8/13/2019 17:12	15.0 min	73.1	102.6	87.5	58.4	80	76	76	70	62	60	58	70	69.9	4.69	78	76	72	
8/13/2019 17:27	15.0 min	73.7	103.2	91.8	59.6	82	76	76	70	64	62	60	70	70.2	4.35	78	76	72	
8/13/2019 17:42	15.0 min	72.7	102.2	81.7	60.4	78	76	74	70	62	62	60	70	69.8	4.63	76	76	74	
8/13/2019 17:57	15.0 min	72.2	101.7	82.6	60.1	78	76	74	70	62	62	60	70	69.2	4.51	76	74	72	
8/13/2019 18:12	15.0 min	72.6	102.1	82.2	60.1	78	76	74	70	64	62	60	70	69.8	4.41	78	76	72	
8/13/2019 18:27	15.0 min	72.4	101.9	82.5	59.3	78	76	74	70	62	60	60	70	69	4.95	78	76	72	
8/13/2019 18:42	15.0 min	71.6	101.1	83.9	60.2	78	76	74	68	62	60	60	68	68.2	4.83	76	74	72	
8/13/2019 18:57	15.0 min	70.8	100.3	80.1	60.3	76	74	74	68	62	60	60	68	67.5	4.75	76	74	72	
8/13/2019 19:12	15.0 min	70.5	100	82.6	59.4	76	74	74	68	60	60	58	68	67.1	4.86	76	74	70	
8/13/2019 19:27	15.0 min	71	100.5	86.7	60.6	78	74	74	68	60	60	60	68	67.1	4.92	76	74	72	
8/13/2019 19:42	15.0 min	70.6	100.1	82.3	60.2	76	74	74	68	60	60	60	68	67	4.96	76	74	72	
8/13/2019 19:57	15.0 min	69.6	99.1	80.3	59.4	76	74	72	66	60	60	58	66	65.9	4.98	76	72	70	
8/13/2019 20:12	15.0 min	69.5	99	79.8	59.7	76	74	72	66	60	60	60	66	66.1	4.61	74	72	70	
8/13/2019 20:27	15.0 min	69	98.5	83.1	59.1	76	74	72	64	60	60	58	64	65.4	4.67	74	72	68	
8/13/2019 20:42	15.0 min	68.9	98.4	80.3	59.1	76	74	72	64	60	60	58	64	65.5	4.5	74	72	68	
8/13/2019 20:57	15.0 min	68.8	98.3	78.1	59	76	74	72	64	60	60	58	64	65	4.95	74	72	70	
8/13/2019 21:12	15.0 min	68.5	98	77.3	58.2	76	74	72	62	60	58	58	62	64.5	4.99	74	72	68	
8/13/2019 21:27	15.0 min	68.8	98.3	87.1	59.2	76	72	72	62	60	60	58	62	64.3	4.76	74	72	68	
8/13/2019 21:42	15.0 min	67.6	97.1	78.1	58.4	74	72	70	62	58	58	58	62	63.8	4.72	74	72	68	
8/13/2019 21:57	15.0 min	67.5	97	79.5	57.7	76	72	70	62	58	58	58	62	63.6	4.88	74	72	68	
8/13/2019 22:12	15.0 min	69.1	98.6	90.5	58.1	76	72	70	62	58	58	58	62	63	5.12	74	72	66	
8/13/2019 22:27	15.0 min	68.9	98.4	88.5	56.9	78	72	70	60	58	56	56	60	62.7	5.64	76	72	66	
8/13/2019 22:42	15.0 min	65.6	95.1	75.3	56	74	72	70	60	56	56	56	60	61.3	4.92	72	70	64	
8/13/2019 22:57	15.0 min	67	96.5	83	55.3	78	72	68	58	56	56	56	58	60.6	5.6	76	70	64	
8/13/2019 23:12	15.0 min	65.4	94.9	79.7	54.6	74	72	70	58	56	54	54	58	60.1	5.4	74	70	64	
8/13/2019 23:27	15.0 min	63.7	93.2	79.6	54.2	72	70	68	56	54	54	54	56	58.9	4.83	72	68	60.5	
8/13/2019 23:42	15.0 min	64	93.5	76.1	55	72	70	68	58	56	54	54	58	59.4	4.88	72	68	62	
8/13/2019 23:57	15.0 min	62.5	92	75.3	52.8	72	68	66	56	54	54	52	56	57.6	4.9	70	68	60	
8/14/2019 0:12	15.0 min	64.6	94.1	86.7	53.8	72	68	66	56	54	54	54	56	58.1	4.66	72	66	58	
8/14/2019 0:27	15.0 min	62.1	91.6	79.4	53.9	72	68	64	56	54	54	54	56	57.1	4.2	72	66	56	
8/14/2019 0:42	15.0 min	61.8	91.3	78.4	53	72	66	64	56	54	54	52	56	57.1	4.39	70	66	58	
8/14/2019 0:57	15.0 min	60.5	90	74	53.2	70	68	62	54	54	52	52	54	56.2	4.05	70	64	56	
8/14/2019 1:12	15.0 min	60.7	90.2	77.2	51.8	72	64	60	56	52	52	52	56	56	3.97	70	62	56	
8/14/2019 1:27	15.0 min	58.7	88.2	76.3	51.7	70	64	56	52	52	52	52	52	53.9	3.62	68	58	54	
8/14/2019 1:42	15.0 min	57.8	87.3	75.6	50.9	68	62	56	52	52	50	50	52	53.4	3.43	66	56	54	
8/14/2019 1:57	15.0 min	60.6	90.1	75.5	50.6	72	68	62	52	52	50	50	52	54.5	4.89	70	64	54	
8/14/2019 2:12	15.0 min	61.7	91.2	76.8	51.3	72	68	64	54	52	52	50	54	55.7	5.11	70	66	56	
8/14/2019 2:27	15.0 min	59.5	89	74.8	51.6	70	66	60	54	52	52	52	54	54.7	4.15	68	62	54	
8/14/2019 2:42	15.0 min	57.4	86.9	72.9	50.8	70	60	54	52	50	50	50	52	53	3.41	68	56	54	
8/14/2019 2:57	15.0 min	59.2	88.7	77.6	50.2	70	64	58	52	50	50	50	52	53.2	4.34	68	60	54	
8/14/2019 3:12	15.0 min	59.7	89.2	76.4	49.5	70	66	60	52	50	50	50	52	53.2	4.87	70	62	54	
8/14/2019 3:27	15.0 min	60.5	90	76.1	50.5	70	68	62	52	52	50	50	52	54.6	4.87	70	64	54	
8/14/2019 3:42	15.0 min	60.5	90	75.2	51.5	72	66	64	52	52	52	50	52	54.8	4.87	70	64	54	
8/14/2019 3:57	15.0 min	59.2	88.7	74.3	51.1	70	66	60	52	52	50	50	52	53.9	4.38	68	62	54	
8/14/2019 4:12	15.0 min	62.9	92.4	78.3	52.2	74	70	66	54	52	52	52	54	56.3	5.3	72	66	56	

		Leq	Lmax	Lmin	L10%	L50%	L90%
1	10	69.8	81.2	56.1	72.0	66.0	58.9
2	11	69.9	81.4	57.7	72.6	66.6	60.4
3	12	70.1	85.0	58.7	72.6	67.1	61.6
4	1	70.8	82.0	58.9	74.0	68.0	61.8
5	2	70.8	82.3	57.8	74.0	68.0	61.4
6	3	70.8	82.4	57.0	74.0	68.0	60.0
7	4	71.2	84.6	57.9	74.0	68.6	60.6
8	5	71.5	84.8	58.8	74.0	69.1	61.1
9	6	72.3	90.3	59.6	74.0	69.6	61.6
10	7	72.5	90.3	60.0	74.0	70.0	62.0
11	8	72.6	90.2	60.2	74.0	70.0	62.0
12	9	72.8	90.4	60.1	74.0	70.0	62.0
13	10	72.3	84.8	59.9	74.0	70.0	62.0
14	11	72.5	85.3	59.8	74.0	70.0	62.6
15	12	72.6	85.2	59.8	74.6	70.0	62.6
16	1	59.6	75.9	52.0	59.3	53.8	52.6
17	2	59.6	76.2	51.3	59.3	53.4	52.0
18	3	60.0	76.1	51.1	60.9	52.6	52.0
19	4	60.1	75.7	51.1	61.4	53.1	52.0
20	5	60.1	75.2	51.1	61.3	53.1	51.6
21	6	59.7	75.9	51.0	60.4	53.1	51.1
22	7	59.0	75.8	50.6	58.6	52.6	50.6
23	8	59.3	76.1	50.3	59.4	52.0	50.6
24	9	60.0	76.4	50.5	61.6	52.0	51.1
25	10	60.0	75.6	50.7	61.8	52.0	51.6
26	11	61.0	76.2	51.4	63.6	52.6	52.0

Max	59.0
Min	72.8
24-hr avg	69.7
CNEL	75.6

8/14/2019 4:27	15.0 min	63.3	92.8	77.7	53	72	70	66	56	54	54	52	56	58	5.16	72	68	60
8/14/2019 4:42	15.0 min	67.2	96.7	86.8	54.7	76	72	70	56	54	54	54	56	59.9	5.83	74	70	64
8/14/2019 4:57	15.0 min	63.8	93.3	78.2	53	74	70	66	56	54	52	52	56	58	5.52	72	68	60
8/14/2019 5:12	15.0 min	66.8	96.3	79.1	55.3	74	72	70	60	56	56	54	60	61.6	5.82	74	72	66
8/14/2019 5:27	15.0 min	69.9	99.4	80.1	55.3	76	74	72	68	56	56	54	68	65.6	6.08	76	74	70
8/14/2019 5:42	15.0 min	68.5	98	78.7	55.9	76	74	72	62	56	56	56	62	63.6	5.82	76	72	68
8/14/2019 5:57	15.0 min	70.1	99.6	89.9	55.9	80	74	72	62	56	56	56	62	63.4	6.26	74	72	68
8/14/2019 6:12	15.0 min	67.7	97.2	80.2	55.5	74	72	72	62	56	56	56	62	62.9	5.76	74	72	68
8/14/2019 6:27	15.0 min	68.4	97.9	80	54.4	76	74	72	64	56	54	54	64	63.4	6.29	74	72	68
8/14/2019 6:42	15.0 min	69.9	99.4	80.5	52.5	76	74	74	66	56	54	52	66	64.2	7.24	76	74	70
8/14/2019 6:57	15.0 min	69.6	99.1	83.9	54.6	76	74	72	66	56	54	54	66	64.4	6.6	76	74	70
8/14/2019 7:12	15.0 min	70.2	99.7	85.5	54.1	78	74	74	66	56	54	54	66	64.7	6.91	76	74	70
8/14/2019 7:27	15.0 min	70.8	100.3	82.4	54.6	78	76	74	68	56	56	54	68	66.2	6.37	76	74	72
8/14/2019 7:42	15.0 min	71.3	100.8	81.7	53.6	78	76	74	68	56	56	54	68	66.7	6.58	76	74	72
8/14/2019 7:57	15.0 min	70.4	99.9	80.1	53.3	78	74	74	68	56	54	52	68	65.7	6.65	76	74	72
8/14/2019 8:12	15.0 min	70.8	100.3	81.6	52.5	78	74	74	68	56	54	52	68	66.2	6.55	76	74	72
8/14/2019 8:27	15.0 min	70.6	100.1	84.5	54.5	78	76	74	68	56	54	54	68	65.7	6.62	76	74	70
8/14/2019 8:42	15.0 min	71	100.5	82.8	53.2	78	74	74	68	56	54	54	68	66.6	6.49	76	74	72
8/14/2019 8:57	15.0 min	74.7	104.2	93.4	53.3	88	76	74	66	56	54	52	66	65.6	7.57	86	74	72
8/14/2019 9:12	15.0 min	77.7	107.2	91.4	65.4	88	84	80	70	66	66	64	70	72.2	5.21	86	82	74
8/14/2019 9:27	15.0 min	71.6	101.1	90.5	53.7	82	76	74	66	54	54	54	66	65.5	7.3	78	74	72
8/14/2019 9:42	15.0 min	70.8	100.3	86.1	53	78	74	74	68	56	54	52	68	65.4	7	76	74	70
8/14/2019 9:57	15.0 min	71.4	100.9	82.9	52.9	78	76	74	68	56	54	52	68	66.7	6.77	76	74	72
8/14/2019 10:12	15.0 min	69.4	98.9	79.7	54.4	76	74	72	66	56	54	54	66	64.6	6.45	76	74	70
8/14/2019 10:27	15.0 min	76.1	105.6	100.2	53.5	84	74	74	66	56	54	54	66	64.9	7.12	78	74	70
8/14/2019 10:42	15.0 min	71.5	101	90.9	53.2	78	76	74	68	56	54	54	68	65.8	6.75	76	74	70
8/14/2019 10:57	5.6 min	70.9	96.2	80.8	55.1	78	76	74	66	58	56	54	66	66.6	5.78	78	74	70

Attachment B

Construction Noise Model Input / Output

Report date: 9/4/2019
Case Description: KL Fenix, Site Prep

---- Receptor #1 ----

		Baselines (dBA)		
Description	Land Use	Daytime	Evening	Night
Residential - Nearest	Residential	70	65	60

Description	Impact Device	Usage(%)	Equipment Spec Lmax (dBA)	Actual Lmax (dBA)	Receptor Distance (feet)	Estimated Shielding (dBA)
Dozer	No	40		81.7	110	0
Dozer	No	40		81.7	150	0

		Calculated (dBA)		Results Noise Limits (dBA) Day		Evening	
Equipment		*Lmax	Leq	Lmax	Leq	Lmax	Leq
Dozer		74.8	70.8	N/A	N/A	N/A	N/A
Dozer		72.1	68.1	N/A	N/A	N/A	N/A
	Total	74.8	72.7	N/A	N/A	N/A	N/A

*Calculated Lmax is the Loudest value.

---- Receptor #2 ----

		Baselines (dBA)		
Description	Land Use	Daytime	Evening	Night
Residential - Typical	Residential	70	65	60

Description	Impact Device	Usage(%)	Equipment Spec Lmax (dBA)	Actual Lmax (dBA)	Receptor Distance (feet)	Estimated Shielding (dBA)
Dozer	No	40		81.7	400	0
Dozer	No	40		81.7	400	0

		Calculated (dBA)		Results Noise Limits (dBA) Day		Evening	
Equipment		*Lmax	Leq	Lmax	Leq	Lmax	Leq
Dozer		63.6	59.6	N/A	N/A	N/A	N/A
Dozer		63.6	59.6	N/A	N/A	N/A	N/A
	Total	63.6	62.6	N/A	N/A	N/A	N/A

*Calculated Lmax is the Loudest value.

---- Receptor #3 ----

		Baselines (dBA)		
Description	Land Use	Daytime	Evening	Night
Church - Nearest	Residential	60	55	50

Description	Impact	Equipment Spec Lmax	Actual Lmax	Receptor Distance	Estimated Shielding

Description	Device	Usage(%)	Spec Lmax (dBA)	Actual Lmax (dBA)	Receptor Distance (feet)	Estimated Shielding (dBA)
Dozer	No	40		81.7	110	0
Dozer	No	40		81.7	150	0

Results

		Calculated (dBA)		Noise Limits (dBA)			
				Day		Evening	
Equipment		*Lmax	Leq	Lmax	Leq	Lmax	Leq
Dozer		74.8	70.8	N/A	N/A	N/A	N/A
Dozer		72.1	68.1	N/A	N/A	N/A	N/A
	Total	74.8	72.7	N/A	N/A	N/A	N/A

*Calculated Lmax is the Loudest value.

---- Receptor #4 ----

		Baselines (dBA)		
Description	Land Use	Daytime	Evening	Night
Church - Typical	Residential	60	55	50

Description	Impact Device	Usage(%)	Equipment Spec Lmax (dBA)	Actual Lmax (dBA)	Receptor Distance (feet)	Estimated Shielding (dBA)
Dozer	No	40		81.7	330	0
Dozer	No	40		81.7	330	0

Results

		Calculated (dBA)		Noise Limits (dBA)			
				Day		Evening	
Equipment		*Lmax	Leq	Lmax	Leq	Lmax	Leq
Dozer		65.3	61.3	N/A	N/A	N/A	N/A
Dozer		65.3	61.3	N/A	N/A	N/A	N/A
	Total	65.3	64.3	N/A	N/A	N/A	N/A

*Calculated Lmax is the Loudest value.

Roadway Construction Noise Model (RCNM),Version 1.1

Report date: 9/4/2019
Case Description: KL Fenix, Grading

---- Receptor #1 ----

		Baselines (dBA)		
Description	Land Use	Daytime	Evening	Night
Residential - Nearest	Residential	70	65	60

Description	Impact Device	Usage(%)	Equipment Spec Lmax (dBA)	Actual Lmax (dBA)	Receptor Distance (feet)	Estimated Shielding (dBA)
Grader	No	40	85		110	0
Grader	No	40	85		150	0
Dozer	No	40		81.7	120	0
Dozer	No	40		81.7	175	0
Roller	No	20		80	130	0

Roller		No	20		80	200	0

Results

	Calculated (dBA)		Noise Limits (dBA)			
			Day		Evening	
Equipment	*Lmax	Leq	Lmax	Leq	Lmax	Leq
Grader	78.2	74.2	N/A	N/A	N/A	N/A
Grader	75.5	71.5	N/A	N/A	N/A	N/A
Dozer	74.1	70.1	N/A	N/A	N/A	N/A
Dozer	70.8	66.8	N/A	N/A	N/A	N/A
Roller	71.7	64.7	N/A	N/A	N/A	N/A
Roller	68	61	N/A	N/A	N/A	N/A
Total	78.2	77.7	N/A	N/A	N/A	N/A

*Calculated Lmax is the Loudest value.

---- Receptor #2 ----

		Baselines (dBA)		
Description	Land Use	Daytime	Evening	Night
Residential - Typical	Residential	70	65	60

Equipment

Description	Impact Device	Usage(%)	Spec Lmax (dBA)	Actual Lmax (dBA)	Receptor Distance (feet)	Estimated Shielding (dBA)
Grader	No	40	85		400	0
Grader	No	40	85		400	0
Dozer	No	40		81.7	400	0
Dozer	No	40		81.7	400	0
Roller	No	20		80	400	0
Roller	No	20		80	400	0

Results

	Calculated (dBA)		Noise Limits (dBA)			
			Day		Evening	
Equipment	*Lmax	Leq	Lmax	Leq	Lmax	Leq
Grader	66.9	63	N/A	N/A	N/A	N/A
Grader	66.9	63	N/A	N/A	N/A	N/A
Dozer	63.6	59.6	N/A	N/A	N/A	N/A
Dozer	63.6	59.6	N/A	N/A	N/A	N/A
Roller	61.9	54.9	N/A	N/A	N/A	N/A
Roller	61.9	54.9	N/A	N/A	N/A	N/A
Total	66.9	68.1	N/A	N/A	N/A	N/A

*Calculated Lmax is the Loudest value.

---- Receptor #3 ----

		Baselines (dBA)		
Description	Land Use	Daytime	Evening	Night
Church - Nearest	Residential	60	55	50

Equipment

Description	Impact Device	Usage(%)	Spec Lmax (dBA)	Actual Lmax (dBA)	Receptor Distance (feet)	Estimated Shielding (dBA)
Grader	No	40	85		110	0
Grader	No	40	85		150	0

Dozer	No	40		81.7	120	0
Dozer	No	40		81.7	175	0
Roller	No	20		80	130	0
Roller	No	20		80	200	0

Results

	Calculated (dBA)		Noise Limits (dBA)			
			Day		Evening	
Equipment	*Lmax	Leq	Lmax	Leq	Lmax	Leq
Grader	78.2	74.2	N/A	N/A	N/A	N/A
Grader	75.5	71.5	N/A	N/A	N/A	N/A
Dozer	74.1	70.1	N/A	N/A	N/A	N/A
Dozer	70.8	66.8	N/A	N/A	N/A	N/A
Roller	71.7	64.7	N/A	N/A	N/A	N/A
Roller	68	61	N/A	N/A	N/A	N/A
Total	78.2	77.7	N/A	N/A	N/A	N/A

*Calculated Lmax is the Loudest value.

---- Receptor #4 ----

		Baselines (dBA)		
Description	Land Use	Daytime	Evening	Night
Church - Typical	Residential	60	55	50

			Equipment			
			Spec	Actual	Receptor	Estimated
	Impact		Lmax	Lmax	Distance	Shielding
Description	Device	Usage(%)	(dBA)	(dBA)	(feet)	(dBA)
Grader	No	40	85		330	0
Grader	No	40	85		330	0
Dozer	No	40		81.7	330	0
Dozer	No	40		81.7	330	0
Roller	No	20		80	330	0
Roller	No	20		80	330	0

Results

	Calculated (dBA)		Noise Limits (dBA)			
			Day		Evening	
Equipment	*Lmax	Leq	Lmax	Leq	Lmax	Leq
Grader	68.6	64.6	N/A	N/A	N/A	N/A
Grader	68.6	64.6	N/A	N/A	N/A	N/A
Dozer	65.3	61.3	N/A	N/A	N/A	N/A
Dozer	65.3	61.3	N/A	N/A	N/A	N/A
Roller	63.6	56.6	N/A	N/A	N/A	N/A
Roller	63.6	56.6	N/A	N/A	N/A	N/A
Total	68.6	69.7	N/A	N/A	N/A	N/A

*Calculated Lmax is the Loudest value.

Report date: 9/4/2019
Case Description: KL Fenix, Trenching

---- Receptor #1 ----

		Baselines (dBA)		
Description	Land Use	Daytime	Evening	Night
Residential - Nearest	Residential	70	65	60

Description	Impact Device	Usage(%)	Equipment Spec Lmax (dBA)	Actual Lmax (dBA)	Receptor Distance (feet)	Estimated Shielding (dBA)
Excavator	No	40		80.7	110	0
Excavator	No	40		80.7	150	0
Drill Rig Truck	No	20		79.1	120	0
Drill Rig Truck	No	20		79.1	175	0

		Results					
		Calculated (dBA)		Noise Limits (dBA)			
				Day		Evening	
Equipment		*Lmax	Leq	Lmax	Leq	Lmax	Leq
Excavator		73.9	69.9	N/A	N/A	N/A	N/A
Excavator		71.2	67.2	N/A	N/A	N/A	N/A
Drill Rig Truck		71.5	64.5	N/A	N/A	N/A	N/A
Drill Rig Truck		68.3	61.3	N/A	N/A	N/A	N/A
	Total	73.9	72.8	N/A	N/A	N/A	N/A

*Calculated Lmax is the Loudest value.

---- Receptor #2 ----

		Baselines (dBA)		
Description	Land Use	Daytime	Evening	Night
Residential - Typical	Residential	70	65	60

Description	Impact Device	Usage(%)	Equipment Spec Lmax (dBA)	Actual Lmax (dBA)	Receptor Distance (feet)	Estimated Shielding (dBA)
Excavator	No	40		80.7	400	0
Excavator	No	40		80.7	400	0
Drill Rig Truck	No	20		79.1	400	0
Drill Rig Truck	No	20		79.1	400	0

		Results					
		Calculated (dBA)		Noise Limits (dBA)			
				Day		Evening	
Equipment		*Lmax	Leq	Lmax	Leq	Lmax	Leq
Excavator		62.6	58.7	N/A	N/A	N/A	N/A
Excavator		62.6	58.7	N/A	N/A	N/A	N/A
Drill Rig Truck		61.1	54.1	N/A	N/A	N/A	N/A
Drill Rig Truck		61.1	54.1	N/A	N/A	N/A	N/A
	Total	62.6	63	N/A	N/A	N/A	N/A

*Calculated Lmax is the Loudest value.

---- Receptor #3 ----

		Baselines (dBA)		
Description	Land Use	Daytime	Evening	Night
Church - Nearest	Residential	60	55	50

Equipment

Description	Impact Device	Usage(%)	Spec Lmax (dBA)	Actual Lmax (dBA)	Receptor Distance (feet)	Estimated Shielding (dBA)
Excavator	No	40		80.7	110	0
Excavator	No	40		80.7	150	0
Drill Rig Truck	No	20		79.1	120	0
Drill Rig Truck	No	20		79.1	175	0

Results

	Calculated (dBA)		Noise Limits (dBA)			
			Day		Evening	
Equipment	*Lmax	Leq	Lmax	Leq	Lmax	Leq
Excavator	73.9	69.9	N/A	N/A	N/A	N/A
Excavator	71.2	67.2	N/A	N/A	N/A	N/A
Drill Rig Truck	71.5	64.5	N/A	N/A	N/A	N/A
Drill Rig Truck	68.3	61.3	N/A	N/A	N/A	N/A
Total	73.9	72.8	N/A	N/A	N/A	N/A

*Calculated Lmax is the Loudest value.

---- Receptor #4 ----

		Baselines (dBA)		
Description	Land Use	Daytime	Evening	Night
Church - Typical	Residential	60	55	50

Equipment

Description	Impact Device	Usage(%)	Spec Lmax (dBA)	Actual Lmax (dBA)	Receptor Distance (feet)	Estimated Shielding (dBA)
Excavator	No	40		80.7	330	0
Excavator	No	40		80.7	330	0
Drill Rig Truck	No	20		79.1	330	0
Drill Rig Truck	No	20		79.1	330	0

Results

	Calculated (dBA)		Noise Limits (dBA)			
			Day		Evening	
Equipment	*Lmax	Leq	Lmax	Leq	Lmax	Leq
Excavator	64.3	60.3	N/A	N/A	N/A	N/A
Excavator	64.3	60.3	N/A	N/A	N/A	N/A
Drill Rig Truck	62.7	55.8	N/A	N/A	N/A	N/A
Drill Rig Truck	62.7	55.8	N/A	N/A	N/A	N/A
Total	64.3	64.6	N/A	N/A	N/A	N/A

*Calculated Lmax is the Loudest value.

Roadway Construction Noise Model (RCNM),Version 1.1

Report date: 9/4/2019
Case Description: KL Fenix, Building Construction

---- Receptor #1 ----

Baselines (dBA)

Description	Land Use	Daytime	Evening	Night
Residential - Nearest	Residential	70	65	60

Description	Impact Device	Usage(%)	Equipment Spec Lmax (dBA)	Actual Lmax (dBA)	Receptor Distance (feet)	Estimated Shielding (dBA)
Crane	No	16		80.6	200	0
Man Lift	No	20		74.7	220	0
Man Lift	No	20		74.7	275	0
Man Lift	No	20		74.7	300	0
Generator	No	50		80.6	210	0
Tractor	No	40	84		250	0
Front End Loader	No	40		79.1	300	0
Backhoe	No	40		77.6	220	0
Welder / Torch	No	40		74	300	0

		Results					
		Calculated (dBA)		Noise Limits (dBA)			
				Day		Evening	
Equipment		*Lmax	Leq	Lmax	Leq	Lmax	Leq
Crane		68.5	60.6	N/A	N/A	N/A	N/A
Man Lift		61.8	54.8	N/A	N/A	N/A	N/A
Man Lift		59.9	52.9	N/A	N/A	N/A	N/A
Man Lift		59.1	52.1	N/A	N/A	N/A	N/A
Generator		68.2	65.2	N/A	N/A	N/A	N/A
Tractor		70	66	N/A	N/A	N/A	N/A
Front End Loader		63.5	59.6	N/A	N/A	N/A	N/A
Backhoe		64.7	60.7	N/A	N/A	N/A	N/A
Welder / Torch		58.4	54.5	N/A	N/A	N/A	N/A
	Total	70	70.6	N/A	N/A	N/A	N/A

*Calculated Lmax is the Loudest value.

---- Receptor #2 ----

		Baselines (dBA)		
Description	Land Use	Daytime	Evening	Night
Residential - Typical	Residential	70	65	60

Description	Impact Device	Usage(%)	Equipment Spec Lmax (dBA)	Actual Lmax (dBA)	Receptor Distance (feet)	Estimated Shielding (dBA)
Crane	No	16		80.6	280	0
Man Lift	No	20		74.7	280	0
Man Lift	No	20		74.7	280	0
Man Lift	No	20		74.7	280	0
Generator	No	50		80.6	280	0
Tractor	No	40	84		280	0
Front End Loader	No	40		79.1	280	0
Backhoe	No	40		77.6	280	0
Welder / Torch	No	40		74	280	0

	Results			
	Calculated (dBA)		Noise Limits (dBA)	
			Day	Evening

Equipment		*Lmax	Leq	Lmax	Leq	Lmax	Leq
Crane		65.6	57.6	N/A	N/A	N/A	N/A
Man Lift		59.7	52.7	N/A	N/A	N/A	N/A
Man Lift		59.7	52.7	N/A	N/A	N/A	N/A
Man Lift		59.7	52.7	N/A	N/A	N/A	N/A
Generator		65.7	62.7	N/A	N/A	N/A	N/A
Tractor		69	65.1	N/A	N/A	N/A	N/A
Front End Loader		64.1	60.2	N/A	N/A	N/A	N/A
Backhoe		62.6	58.6	N/A	N/A	N/A	N/A
Welder / Torch		59	55.1	N/A	N/A	N/A	N/A
	Total	69	69.2	N/A	N/A	N/A	N/A

*Calculated Lmax is the Loudest value.

---- Receptor #3 ----

		Baselines (dBA)		
Description	Land Use	Daytime	Evening	Night
Church - Nearest	Residential	60	55	50

Description	Impact Device	Usage(%)	Equipment Spec Lmax (dBA)	Actual Lmax (dBA)	Receptor Distance (feet)	Estimated Shielding (dBA)
Crane	No	16		80.6	650	0
Man Lift	No	20		74.7	675	0
Man Lift	No	20		74.7	700	0
Man Lift	No	20		74.7	750	0
Generator	No	50		80.6	675	0
Tractor	No	40	84		750	0
Front End Loader	No	40		79.1	650	0
Backhoe	No	40		77.6	750	0
Welder / Torch	No	40		74	700	0

Results

		Calculated (dBA)		Noise Limits (dBA) Day		Evening	
Equipment		*Lmax	Leq	Lmax	Leq	Lmax	Leq
Crane		58.3	50.3	N/A	N/A	N/A	N/A
Man Lift		52.1	45.1	N/A	N/A	N/A	N/A
Man Lift		51.8	44.8	N/A	N/A	N/A	N/A
Man Lift		51.2	44.2	N/A	N/A	N/A	N/A
Generator		58	55	N/A	N/A	N/A	N/A
Tractor		60.5	56.5	N/A	N/A	N/A	N/A
Front End Loader		56.8	52.9	N/A	N/A	N/A	N/A
Backhoe		54	50.1	N/A	N/A	N/A	N/A
Welder / Torch		51.1	47.1	N/A	N/A	N/A	N/A
	Total	60.5	61.2	N/A	N/A	N/A	N/A

*Calculated Lmax is the Loudest value.

---- Receptor #4 ----

		Baselines (dBA)		
Description	Land Use	Daytime	Evening	Night
Church - Typical	Residential	60	55	50

		Equipment Spec	Actual	Receptor	Estimated

Description	Impact Device	Usage(%)	Lmax (dBA)	Lmax (dBA)	Distance (feet)	Shielding (dBA)
Crane	No	16		80.6	775	0
Man Lift	No	20		74.7	775	0
Man Lift	No	20		74.7	775	0
Man Lift	No	20		74.7	775	0
Generator	No	50		80.6	775	0
Tractor	No	40	84		775	0
Front End Loader	No	40		79.1	775	0
Backhoe	No	40		77.6	775	0
Welder / Torch	No	40		74	775	0

Results

		Calculated (dBA)		Noise Limits (dBA)			
				Day		Evening	
Equipment		*Lmax	Leq	Lmax	Leq	Lmax	Leq
Crane		56.7	48.8	N/A	N/A	N/A	N/A
Man Lift		50.9	43.9	N/A	N/A	N/A	N/A
Man Lift		50.9	43.9	N/A	N/A	N/A	N/A
Man Lift		50.9	43.9	N/A	N/A	N/A	N/A
Generator		56.8	53.8	N/A	N/A	N/A	N/A
Tractor		60.2	56.2	N/A	N/A	N/A	N/A
Front End Loader		55.3	51.3	N/A	N/A	N/A	N/A
Backhoe		53.8	49.8	N/A	N/A	N/A	N/A
Welder / Torch		50.2	46.2	N/A	N/A	N/A	N/A
	Total	60.2	60.3	N/A	N/A	N/A	N/A

*Calculated Lmax is the Loudest value.

Roadway Construction Noise Model (RCNM),Version 1.1

Report date: 9/4/2019
Case Description: KL Fenix, Paving

---- Receptor #1 ----

Description	Land Use	Baselines (dBA) Daytime	Evening	Night
Residential - Nearest	Residential	70	65	60

Equipment

Description	Impact Device	Usage(%)	Spec Lmax (dBA)	Actual Lmax (dBA)	Receptor Distance (feet)	Estimated Shielding (dBA)
Concrete Mixer Truck	No	40		78.8	110	0
Concrete Pump Truck	No	20		81.4	150	0

Results

		Calculated (dBA)		Noise Limits (dBA)			
				Day		Evening	
Equipment		*Lmax	Leq	Lmax	Leq	Lmax	Leq
Concrete Mixer Truck		72	68	N/A	N/A	N/A	N/A
Concrete Pump Truck		71.9	64.9	N/A	N/A	N/A	N/A
	Total	72	69.7	N/A	N/A	N/A	N/A

*Calculated Lmax is the Loudest value.

---- Receptor #2 ----

Baselines (dBA)

Description	Land Use	Daytime	Evening	Night
Residential - Typical	Residential	70	65	60

Equipment

Description	Impact Device	Usage(%)	Spec Lmax (dBA)	Actual Lmax (dBA)	Receptor Distance (feet)	Estimated Shielding (dBA)
Concrete Mixer Truck	No	40		78.8	400	0
Concrete Pump Truck	No	20		81.4	400	0

Results

	Calculated (dBA)		Noise Limits (dBA)			
			Day		Evening	
Equipment	*Lmax	Leq	Lmax	Leq	Lmax	Leq
Concrete Mixer Truck	60.7	56.8	N/A	N/A	N/A	N/A
Concrete Pump Truck	63.3	56.3	N/A	N/A	N/A	N/A
Total	63.3	59.6	N/A	N/A	N/A	N/A

*Calculated Lmax is the Loudest value.

---- Receptor #3 ----

Baselines (dBA)

Description	Land Use	Daytime	Evening	Night
Church - Nearest	Residential	60	55	50

Equipment

Description	Impact Device	Usage(%)	Spec Lmax (dBA)	Actual Lmax (dBA)	Receptor Distance (feet)	Estimated Shielding (dBA)
Concrete Mixer Truck	No	40		78.8	110	0
Concrete Pump Truck	No	20		81.4	150	0

Results

	Calculated (dBA)		Noise Limits (dBA)			
			Day		Evening	
Equipment	*Lmax	Leq	Lmax	Leq	Lmax	Leq
Concrete Mixer Truck	72	68	N/A	N/A	N/A	N/A
Concrete Pump Truck	71.9	64.9	N/A	N/A	N/A	N/A
Total	72	69.7	N/A	N/A	N/A	N/A

*Calculated Lmax is the Loudest value.

---- Receptor #4 ----

Baselines (dBA)

Description	Land Use	Daytime	Evening	Night
Church - Typical	Residential	60	55	50

Equipment

Description	Impact Device	Usage(%)	Spec Lmax (dBA)	Actual Lmax (dBA)	Receptor Distance (feet)	Estimated Shielding (dBA)
Concrete Mixer Truck	No	40		78.8	330	0
Concrete Pump Truck	No	20		81.4	330	0

Results

		Calculated (dBA)		Noise Limits (dBA)			
				Day		Evening	
Equipment		*Lmax	Leq	Lmax	Leq	Lmax	Leq
Concrete Mixer Truck		62.4	58.4	N/A	N/A	N/A	N/A
Concrete Pump Truck		65	58	N/A	N/A	N/A	N/A
	Total	65	61.2	N/A	N/A	N/A	N/A

*Calculated Lmax is the Loudest value.

Roadway Construction Noise Model (RCNM),Version 1.1

Report date: 9/4/2019
Case Description: KL Fenix, Architectural Coating

---- Receptor #1 ----

		Baselines (dBA)		
Description	Land Use	Daytime	Evening	Night
Residential - Nearest	Residential	70	65	60

			Equipment			
			Spec	Actual	Receptor	Estimated
	Impact		Lmax	Lmax	Distance	Shielding
Description	Device	Usage(%)	(dBA)	(dBA)	(feet)	(dBA)
Man Lift	No	20		74.7	110	0
Man Lift	No	20		74.7	150	0

Results

		Calculated (dBA)		Noise Limits (dBA)			
				Day		Evening	
Equipment		*Lmax	Leq	Lmax	Leq	Lmax	Leq
Man Lift		67.9	60.9	N/A	N/A	N/A	N/A
Man Lift		65.2	58.2	N/A	N/A	N/A	N/A
	Total	67.9	62.7	N/A	N/A	N/A	N/A

*Calculated Lmax is the Loudest value.

---- Receptor #2 ----

		Baselines (dBA)		
Description	Land Use	Daytime	Evening	Night
Residential - Typical	Residential	70	65	60

			Equipment			
			Spec	Actual	Receptor	Estimated
	Impact		Lmax	Lmax	Distance	Shielding
Description	Device	Usage(%)	(dBA)	(dBA)	(feet)	(dBA)
Man Lift	No	20		74.7	400	0
Man Lift	No	20		74.7	400	0

Results

		Calculated (dBA)		Noise Limits (dBA)			
				Day		Evening	
Equipment		*Lmax	Leq	Lmax	Leq	Lmax	Leq
Man Lift		56.6	49.6	N/A	N/A	N/A	N/A
Man Lift		56.6	49.6	N/A	N/A	N/A	N/A
	Total	56.6	52.7	N/A	N/A	N/A	N/A

*Calculated Lmax is the Loudest value.

---- Receptor #3 ----

Description	Land Use	Baselines (dBA) Daytime	Evening	Night
Church - Nearest	Residential	60	55	50

Description	Impact Device	Usage(%)	Equipment Spec Lmax (dBA)	Actual Lmax (dBA)	Receptor Distance (feet)	Estimated Shielding (dBA)
Man Lift	No	20		74.7	110	0
Man Lift	No	20		74.7	150	0

Equipment		Calculated (dBA) *Lmax	Leq	Results Noise Limits (dBA) Day Lmax	Day Leq	Evening Lmax	Evening Leq
Man Lift		67.9	60.9	N/A	N/A	N/A	N/A
Man Lift		65.2	58.2	N/A	N/A	N/A	N/A
	Total	67.9	62.7	N/A	N/A	N/A	N/A

*Calculated Lmax is the Loudest value.

---- Receptor #4 ----

Description	Land Use	Baselines (dBA) Daytime	Evening	Night
Church - Typical	Residential	60	55	50

Description	Impact Device	Usage(%)	Equipment Spec Lmax (dBA)	Actual Lmax (dBA)	Receptor Distance (feet)	Estimated Shielding (dBA)
Man Lift	No	20		74.7	330	0
Man Lift	No	20		74.7	330	0

Equipment		Calculated (dBA) *Lmax	Leq	Results Noise Limits (dBA) Day Lmax	Day Leq	Evening Lmax	Evening Leq
Man Lift		58.3	51.3	N/A	N/A	N/A	N/A
Man Lift		58.3	51.3	N/A	N/A	N/A	N/A
	Total	58.3	54.3	N/A	N/A	N/A	N/A

*Calculated Lmax is the Loudest value.

Attachment C

Traffic Noise Model Input / Output

Dudek					**4 October 2019**						
MG					**TNM 2.5**						
INPUT: ROADWAYS							**Average pavement type shall be used unless**				
PROJECT/CONTRACT:	**10029.10**						**a State highway agency substantiates the use**				
RUN:	**KL Fenix - Existing**						**of a different type with the approval of FHWA**				
Roadway		**Points**									
Name	**Width**	**Name**	**No.**	**Coordinates (pavement)**			**Flow Control**			**Segment**	
				X	**Y**	**Z**	**Control Device**	**Speed Constraint**	**Percent Vehicles Affected**	**Pvmt Type**	**On Struct?**
	ft			ft	ft	ft		mph	%		
I-110	150.0	point1	1	1,933.1	673.5	40.00				Average	
		point3	3	1,985.6	1,089.0	40.00				Average	
		point4	4	2,108.1	1,723.2	40.00				Average	
		point5	5	2,318.0	2,694.1	40.00				Average	
		point6	6	2,671.7	4,220.2	40.00					
Torrance Blvd - Vermont Ave to Figuero	55.0	point53	53	1,141.5	2,667.9	20.00				Average	
		point8	8	2,252.4	2,681.0	20.00					
Main St. - South of Torrance Ave	70.0	point58	58	4,405.7	630.1	20.00				Average	
		point14	14	4,344.4	905.7	20.00				Average	
		point15	15	4,298.5	1,152.8	20.00				Average	
		point16	16	4,272.3	1,631.7	20.00				Average	
		point17	17	4,232.9	2,305.2	20.00				Average	
		point18	18	4,215.4	2,672.6	20.00				Average	
		point19	19	4,212.2	2,719.4	20.00					
Vermont Ave	55.0	point60	60	1,046.4	678.4	20.00				Average	
		point39	39	1,055.1	1,026.1	20.00				Average	
		point40	40	1,112.0	1,540.1	20.00				Average	
		point41	41	1,122.4	2,670.0	20.00				Average	
		point42	42	1,085.9	2,968.5	20.00				Average	
		point43	43	1,036.3	3,425.9	20.00					
Torrance Blvd - E. of Main St	55.0	point66	66	4,222.5	2,697.2	20.00				Average	
		point12	12	4,731.4	2,690.1	20.00					
Torrance Blvd - Main St to Figueroa	55.0	point67	67	2,416.9	2,682.6	20.00				Average	
		point10	10	4,208.7	2,695.9	20.00					
Main St. - North of Torrance Ave	70.0	point77	77	4,212.2	2,719.4	20.00				Average	

		point20	20	4,165.6	3,766.0	20.00				Average	
		point21	21	4,143.0	4,203.4	20.00				Average	
		point22	22	4,130.1	4,701.1	20.00					
Figueroa St - Torrance Blvd. to 214th St	90.0	point62	62	2,344.8	602.3	20.00				Average	
		point26	26	2,344.8	869.1	20.00				Average	
		point27	27	2,331.7	1,380.9	20.00				Average	
		point28	28	2,336.0	1,940.7	20.00				Average	
		point29	29	2,401.6	2,347.5	20.00				Average	
		point71	71	2,487.5	2,678.8	20.00					
Figueroa St - Del Amo Blvd. to Torrance	90.0	point74	74	2,494.3	2,699.2	20.00				Average	
		point70	70	2,511.0	2,767.3	20.00				Average	
		point32	32	2,804.0	3,449.6	20.00				Average	
		point76	76	2,808.5	3,452.3	20.00				Average	
		point45	45	2,846.6	3,625.9	20.00				Average	
		point46	46	2,881.4	3,889.8	20.00				Average	
		point47	47	2,874.4	4,170.9	20.00					

Dudek **4 October 2019**
MG **TNM 2.5**

INPUT: TRAFFIC FOR LAeq1h Volumes
PROJECT/CONTRACT: **10029.10**
RUN: **KL Fenix - Existing**

Roadway	Points		Segment									
Name	Name	No.	Autos		MTrucks		HTrucks		Buses		Motorcycles	
			V	S	V	S	V	S	V	S	V	S
			veh/hr	mph	veh/hr	mph	veh/hr	mph	veh/hr	mph	veh/hr	mph
I-110	point1	1	20900	65	660	65	440	65	0	0	0	0
	point3	3	20900	65	660	65	440	65	0	0	0	0
	point4	4	20900	65	660	65	440	65	0	0	0	0
	point5	5	20900	65	660	65	440	65	0	0	0	0
	point6	6										
Torrance Blvd - Vermont Ave to Figuero	point53	53	2204	40	46	40	70	40	0	0	0	0
	point8	8										
Main St. - South of Torrance Ave	point58	58	1856	45	39	45	59	45	0	0	0	0
	point14	14	1856	45	39	45	59	45	0	0	0	0
	point15	15	1856	45	39	45	59	45	0	0	0	0
	point16	16	1856	45	39	45	59	45	0	0	0	0
	point17	17	1856	45	39	45	59	45	0	0	0	0
	point18	18	1856	45	39	45	59	45	0	0	0	0
	point19	19										
Vermont Ave	point60	60	0	0	0	0	0	0	0	0	0	0
	point39	39	0	0	0	0	0	0	0	0	0	0
	point40	40	0	0	0	0	0	0	0	0	0	0
	point41	41	0	0	0	0	0	0	0	0	0	0
	point42	42	0	0	0	0	0	0	0	0	0	0
	point43	43										
Torrance Blvd - E. of Main St	point66	66	154	25	3	25	5	25	0	0	0	0
	point12	12										
Torrance Blvd - Main St to Figueroa	point67	67	1364	40	29	40	43	40	0	0	0	0

	point10	10										
Main St. - North of Torrance Ave	point77	77	1925	45	41	45	61	45	0	0	0	0
	point20	20	1925	45	41	45	61	45	0	0	0	0
	point21	21	1925	45	41	45	61	45	0	0	0	0
	point22	22										
Figueroa St - Torrance Blvd. to 214th St	point62	62	1075	40	23	40	34	40	0	0	0	0
	point26	26	1075	40	23	40	34	40	0	0	0	0
	point27	27	1075	40	23	40	34	40	0	0	0	0
	point28	28	1075	40	23	40	34	40	0	0	0	0
	point29	29	1075	40	23	40	34	40	0	0	0	0
	point71	71										
Figueroa St - Del Amo Blvd. to Torrance	point74	74	1936	40	41	40	61	40	0	0	0	0
	point70	70	1936	40	41	40	61	40	0	0	0	0
	point32	32	1936	40	41	40	61	40	0	0	0	0
	point76	76	1936	40	41	40	61	40	0	0	0	0
	point45	45	1936	40	41	40	61	40	0	0	0	0
	point46	46	1936	40	41	40	61	40	0	0	0	0
	point47	47										

Dudek 4 October 2019
MG TNM 2.5

INPUT: RECEIVERS
PROJECT/CONTRACT: 10029.10
RUN: KL Fenix - Existing

Receiver Name	No.	#DUs	Coordinates (ground) X	Y	Z	Height above Ground	Input Sound Levels and Criteria Existing LAeq1h	Impact Criteria LAeq1h	Impact Criteria Sub'l	NR Goal	Active in Calc.
			ft	ft	ft	ft	dBA	dBA	dB	dB	
ST1	2	1	3,059.2	3,086.6	20.00	5.00	0.00	66	10.0	8.0	Y
ST2	3	1	3,939.8	2,732.4	20.00	5.00	0.00	66	10.0	8.0	Y
ST3	4	1	4,226.3	3,293.4	20.00	5.00	0.00	66	10.0	8.0	Y
ST4	5	1	4,276.9	2,356.6	20.00	5.00	0.00	66	10.0	8.0	Y
ST5	6	1	4,301.8	1,880.6	20.00	5.00	0.00	66	10.0	8.0	Y
ST6	8	1	1,745.5	2,625.0	20.00	5.00	0.00	66	10.0	8.0	Y

Dudek 4 October 2019
MG TNM 2.5

INPUT: BARRIERS
PROJECT/CONTRACT: 10029.10
RUN: KL Fenix - Existing

Barrier									Points										
Name	Type	Height		If Wall	If Berm			Add'tnl	Name	No.	Coordinates (bottom)			Height	Segment				
		Min	Max	$ per Unit Area	$ per Unit Vol.	Top Width	Run:Rise	$ per Unit Length			X	Y	Z	at Point	Seg Ht Incre-ment	Perturbs #Up	#Dn	On Struct?	Important Reflec-tions?
		ft	ft	$/sq ft	$/cu yd	ft	ft:ft	$/ft			ft	ft	ft	ft	ft				
Barrier1	W	0.00	99.99	0.00				0.00	point1	1	3,391.0	3,060.8	20.00	20.00	0.00	0	0		
									point3	3	3,392.4	2,966.4	20.00	20.00	0.00	0	0		
									point4	4	3,516.4	2,966.4	20.00	20.00	0.00	0	0		
									point5	5	3,515.7	3,066.3	20.00	20.00					
Barrier1-2-2-2	W	0.00	99.99	0.00				0.00	point73	73	2,802.5	2,984.3	20.00	20.00	0.00	0	0		
									point17	17	3,188.2	2,967.8	20.00	20.00	0.00	0	0		
									point18	18	3,202.0	2,739.1	20.00	20.00	0.00	0	0		
									point19	19	2,805.2	2,730.9	20.00	20.00					
Barrier1-2-2-2-2	W	0.00	99.99	0.00				0.00	point74	74	3,268.1	2,921.0	20.00	20.00	0.00	0	0		
									point21	21	3,359.0	2,912.7	20.00	20.00	0.00	0	0		
									point22	22	3,361.8	2,752.9	20.00	20.00	0.00	0	0		
									point23	23	3,276.4	2,752.9	20.00	20.00					
Barrier1-2-2-2-2-2	W	0.00	99.99	0.00				0.00	point75	75	3,416.9	2,846.6	20.00	20.00	0.00	0	0		
									point25	25	3,518.8	2,846.6	20.00	20.00	0.00	0	0		
									point26	26	3,524.4	2,750.1	20.00	20.00	0.00	0	0		
									point27	27	3,430.7	2,752.9	20.00	20.00					
Barrier1-2-2-2-2-2	W	0.00	99.99	0.00				0.00	point76	76	3,816.4	2,945.8	20.00	20.00	0.00	0	0		
									point35	35	3,926.6	2,943.0	20.00	20.00	0.00	0	0		
									point36	36	3,932.1	2,761.2	20.00	20.00	0.00	0	0		
									point37	37	3,863.2	2,761.2	20.00	20.00	0.00	0	0		
									point38	38	3,863.2	2,846.6	20.00	20.00	0.00	0	0		
									point39	39	3,816.4	2,843.8	20.00	20.00					
Barrier1-2-2-2-2-2	W	0.00	99.99	0.00				0.00	point77	77	4,003.8	2,951.3	20.00	20.00	0.00	0	0		
									point41	41	4,147.0	2,945.8	20.00	20.00	0.00	0	0		
									point42	42	4,144.3	2,744.6	20.00	20.00	0.00	0	0		
									point43	43	4,003.8	2,739.1	20.00	20.00					
Barrier1-2-2-2-2-2	W	0.00	99.99	0.00				0.00	point78	78	3,590.5	2,954.0	20.00	20.00	0.00	0	0		
									point29	29	3,711.7	2,948.5	20.00	20.00	0.00	0	0		
									point30	30	3,714.5	2,838.3	20.00	20.00	0.00	0	0		
									point31	31	3,788.9	2,835.6	20.00	20.00	0.00	0	0		
									point32	32	3,794.4	2,750.1	20.00	20.00	0.00	0	0		
									point33	33	3,598.8	2,750.1	20.00	20.00					
Barrier1-2-2-2	W	0.00	99.99	0.00				0.00	point79	79	2,667.5	2,921.0	20.00	20.00	0.00	0	0		
									point11	11	2,744.6	2,921.0	20.00	20.00	0.00	0	0		
									point12	12	2,736.3	2,744.6	20.00	20.00	0.00	0	0		

									point13	13	2,598.6	2,739.1	20.00	20.00	0.00	0	0		
									point14	14	2,606.8	2,788.7	20.00	20.00	0.00	0	0		
									point15	15	2,661.9	2,805.3	20.00	20.00					
Barrier1-2-2-2-2-2	W	0.00	99.99	0.00				0.00	point80	80	3,493.5	1,623.0	20.00	20.00	0.00	0	0		
									point45	45	4,116.2	1,623.0	20.00	20.00	0.00	0	0		
									point46	46	4,198.8	917.7	20.00	20.00	0.00	0	0		
									point47	47	3,465.9	928.7	20.00	20.00					
Barrier1-2-2-2-2-2-2-2	W	0.00	99.99	0.00				0.00	point82	82	2,639.4	1,545.9	20.00	20.00	0.00	0	0		
									point49	49	2,678.0	1,606.5	20.00	20.00	0.00	0	0		
									point50	50	2,810.2	1,601.0	20.00	20.00	0.00	0	0		
									point51	51	2,848.8	1,716.7	20.00	20.00	0.00	0	0		
									point52	52	3,019.6	1,711.2	20.00	20.00	0.00	0	0		
									point53	53	3,085.7	1,766.3	20.00	20.00	0.00	0	0		
									point54	54	3,355.7	1,755.3	20.00	20.00	0.00	0	0		
									point55	55	3,339.2	906.7	20.00	20.00	0.00	0	0		
									point56	56	2,424.5	901.2	20.00	20.00	0.00	0	0		
									point57	57	2,435.5	1,237.3	20.00	20.00					
Barrier1-2-2-2-2-2-2-2-2	W	0.00	99.99	0.00				0.00	point83	83	2,435.5	1,237.3	20.00	20.00	0.00	0	0		
									point58	58	2,650.4	1,253.8	20.00	20.00					
Barrier1-2-2-2	W	0.00	99.99	0.00				0.00	point84	84	1,289.3	2,592.9	20.00	20.00	0.00	0	0		
									point60	60	2,176.5	2,570.8	20.00	20.00	0.00	0	0		
									point61	61	1,862.4	1,022.4	20.00	20.00	0.00	0	0		
									point2	2	1,168.1	994.9	20.00	20.00					

Dudek
MG
4 October 2019
TNM 2.5
Calculated with TNM 2.5

RESULTS: SOUND LEVELS
PROJECT/CONTRACT: 10029.10
RUN: KL Fenix - Existing
BARRIER DESIGN: INPUT HEIGHTS
ATMOSPHERICS: 68 deg F, 50% RH

Average pavement type shall be used unless a State highway agency substantiates the use of a different type with approval of FHWA.

Receiver Name	No.	#DUs	Existing LAeq1h	No Barrier LAeq1h Calculated	Crit'n	Increase over existing Calculated	Crit'n Sub'l Inc	Type Impact	With Barrier Calculated LAeq1h	Noise Reduction Calculated	Goal	Calculated minus Goal
			dBA	dBA	dBA	dB	dB		dBA	dB	dB	dB
ST1	2	1	0.0	66.2	66	66.2	10	Snd Lvl	66.2	0.0	8	-8.0
ST2	3	1	0.0	70.1	66	70.1	10	Snd Lvl	70.1	0.0	8	-8.0
ST3	4	1	0.0	72.6	66	72.6	10	Snd Lvl	72.6	0.0	8	-8.0
ST4	5	1	0.0	71.6	66	71.6	10	Snd Lvl	71.6	0.0	8	-8.0
ST5	6	1	0.0	71.9	66	71.9	10	Snd Lvl	71.9	0.0	8	-8.0
ST6	8	1	0.0	71.6	66	71.6	10	Snd Lvl	71.6	0.0	8	-8.0

Dwelling Units	# DUs	Noise Reduction Min	Avg	Max
		dB	dB	dB
All Selected	6	0.0	0.0	0.0
All Impacted	6	0.0	0.0	0.0
All that meet NR Goal	0	0.0	0.0	0.0

Dudek 4 October 2019
MG TNM 2.5

INPUT: ROADWAYS
PROJECT/CONTRACT: 10029.10
RUN: KL Fenix - Ex with Proj

Average pavement type shall be used unless a State highway agency substantiates the use of a different type with the approval of FHWA

Roadway Name	Width	Points Name	No.	Coordinates (pavement) X	Y	Z	Flow Control Control Device	Speed Constraint	Percent Vehicles Affected	Segment Pvmt Type	On Struct?
	ft			ft	ft	ft		mph	%		
I-110	150.0	point1	1	1,933.1	673.5	40.00				Average	
		point3	3	1,985.6	1,089.0	40.00				Average	
		point4	4	2,108.1	1,723.2	40.00				Average	
		point5	5	2,318.0	2,694.1	40.00				Average	
		point6	6	2,671.7	4,220.2	40.00					
Torrance Blvd - Vermont Ave to Figuero	55.0	point53	53	1,141.5	2,667.9	20.00				Average	
		point8	8	2,252.4	2,681.0	20.00					
Main St. - South of Torrance Ave	70.0	point58	58	4,405.7	630.1	20.00				Average	
		point14	14	4,344.4	905.7	20.00				Average	
		point15	15	4,298.5	1,152.8	20.00				Average	
		point16	16	4,272.3	1,631.7	20.00				Average	
		point17	17	4,232.9	2,305.2	20.00				Average	
		point18	18	4,215.4	2,672.6	20.00				Average	
		point19	19	4,212.2	2,719.4	20.00					
Vermont Ave	55.0	point60	60	1,046.4	678.4	20.00				Average	
		point39	39	1,055.1	1,026.1	20.00				Average	
		point40	40	1,112.0	1,540.1	20.00				Average	
		point41	41	1,122.4	2,670.0	20.00				Average	
		point42	42	1,085.9	2,968.5	20.00				Average	
		point43	43	1,036.3	3,425.9	20.00					
Torrance Blvd - E. of Main St	55.0	point66	66	4,222.5	2,697.2	20.00				Average	
		point12	12	4,731.4	2,690.1	20.00					
Torrance Blvd - Main St to Figueroa	55.0	point67	67	2,416.9	2,682.6	20.00				Average	
		point10	10	4,208.7	2,695.9	20.00					
Main St. - North of Torrance Ave	70.0	point77	77	4,212.2	2,719.4	20.00				Average	

		point20	20	4,165.6	3,766.0	20.00				Average	
		point21	21	4,143.0	4,203.4	20.00				Average	
		point22	22	4,130.1	4,701.1	20.00					
Figueroa St - Torrance Blvd. to 214th St	90.0	point62	62	2,344.8	602.3	20.00				Average	
		point26	26	2,344.8	869.1	20.00				Average	
		point27	27	2,331.7	1,380.9	20.00				Average	
		point28	28	2,336.0	1,940.7	20.00				Average	
		point29	29	2,401.6	2,347.5	20.00				Average	
		point71	71	2,487.5	2,678.8	20.00					
Figueroa St - Del Amo Blvd. to Torrance	90.0	point74	74	2,494.3	2,699.2	20.00				Average	
		point70	70	2,511.0	2,767.3	20.00				Average	
		point32	32	2,804.0	3,449.6	20.00				Average	
		point76	76	2,808.5	3,452.3	20.00				Average	
		point45	45	2,846.6	3,625.9	20.00				Average	
		point46	46	2,881.4	3,889.8	20.00				Average	
		point47	47	2,874.4	4,170.9	20.00					

Dudek **4 October 2019**
MG **TNM 2.5**

INPUT: TRAFFIC FOR LAeq1h Volumes
PROJECT/CONTRACT: **10029.10**
RUN: **KL Fenix - Ex with Proj**

Roadway	Points		Segment									
Name	Name	No.	Autos		MTrucks		HTrucks		Buses		Motorcycles	
			V	S	V	S	V	S	V	S	V	S
			veh/hr	mph	veh/hr	mph	veh/hr	mph	veh/hr	mph	veh/hr	mph
I-110	point1	1	20900	65	660	65	440	65	0	0	0	0
	point3	3	20900	65	660	65	440	65	0	0	0	0
	point4	4	20900	65	660	65	440	65	0	0	0	0
	point5	5	20900	65	660	65	440	65	0	0	0	0
	point6	6										
Torrance Blvd - Vermont Ave to Figuero	point53	53	2209	40	47	40	70	40	0	0	0	0
	point8	8										
Main St. - South of Torrance Ave	point58	58	1856	45	39	45	59	45	0	0	0	0
	point14	14	1856	45	39	45	59	45	0	0	0	0
	point15	15	1856	45	39	45	59	45	0	0	0	0
	point16	16	1856	45	39	45	59	45	0	0	0	0
	point17	17	1856	45	39	45	59	45	0	0	0	0
	point18	18	1856	45	39	45	59	45	0	0	0	0
	point19	19										
Vermont Ave	point60	60	0	0	0	0	0	0	0	0	0	0
	point39	39	0	0	0	0	0	0	0	0	0	0
	point40	40	0	0	0	0	0	0	0	0	0	0
	point41	41	0	0	0	0	0	0	0	0	0	0
	point42	42	0	0	0	0	0	0	0	0	0	0
	point43	43										
Torrance Blvd - E. of Main St	point66	66	154	25	3	25	5	25	0	0	0	0
	point12	12										
Torrance Blvd - Main St to Figueroa	point67	67	1408	40	30	40	44	40	0	0	0	0

	point10	10										
Main St. - North of Torrance Ave	point77	77	1968	45	41	45	62	45	0	0	0	0
	point20	20	1968	45	41	45	62	45	0	0	0	0
	point21	21	1968	45	41	45	62	45	0	0	0	0
	point22	22										
Figueroa St - Torrance Blvd. to 214th St	point62	62	1079	40	23	40	34	40	0	0	0	0
	point26	26	1079	40	23	40	34	40	0	0	0	0
	point27	27	1079	40	23	40	34	40	0	0	0	0
	point28	28	1079	40	23	40	34	40	0	0	0	0
	point29	29	1079	40	23	40	34	40	0	0	0	0
	point71	71										
Figueroa St - Del Amo Blvd. to Torrance	point74	74	1973	40	42	40	62	40	0	0	0	0
	point70	70	1973	40	42	40	62	40	0	0	0	0
	point32	32	1973	40	42	40	62	40	0	0	0	0
	point76	76	1973	40	42	40	62	40	0	0	0	0
	point45	45	1973	40	42	40	62	40	0	0	0	0
	point46	46	1973	40	42	40	62	40	0	0	0	0
	point47	47										

Dudek 4 October 2019
MG TNM 2.5

INPUT: RECEIVERS
PROJECT/CONTRACT: 10029.10
RUN: KL Fenix - Ex with Proj

Receiver Name	No.	#DUs	Coordinates (ground) X	Y	Z	Height above Ground	Input Sound Levels and Criteria: Existing LAeq1h	Impact Criteria LAeq1h	Impact Criteria Sub'l	NR Goal	Active in Calc.
			ft	ft	ft	ft	dBA	dBA	dB	dB	
ST1	2	1	3,059.2	3,086.6	20.00	5.00	0.00	66	10.0	8.0	Y
ST2	3	1	3,939.8	2,732.4	20.00	5.00	0.00	66	10.0	8.0	Y
ST3	4	1	4,226.3	3,293.4	20.00	5.00	0.00	66	10.0	8.0	Y
ST4	5	1	4,276.9	2,356.6	20.00	5.00	0.00	66	10.0	8.0	Y
ST5	6	1	4,301.8	1,880.6	20.00	5.00	0.00	66	10.0	8.0	Y
ST6	8	1	1,745.5	2,625.0	20.00	5.00	0.00	66	10.0	8.0	Y

Dudek 4 October 2019
MG TNM 2.5

INPUT: BARRIERS
PROJECT/CONTRACT: 10029.10
RUN: KL Fenix - Ex with Proj

Barrier									Points										
Name	Type	Height		If Wall	If Berm			Add'tnl	Name	No.	Coordinates (bottom)			Height	Segment				
		Min	Max	$ per Unit Area	$ per Unit Vol.	Top Width	Run:Rise	$ per Unit Length			X	Y	Z	at Point	Seg Ht Incre-ment	Perturbs #Up	#Dn	On Struct?	Important Reflec-tions?
		ft	ft	$/sq ft	$/cu yd	ft	ft:ft	$/ft			ft	ft	ft	ft	ft				
Barrier1	W	0.00	99.99	0.00				0.00	point1	1	3,391.0	3,060.8	20.00	20.00	0.00	0	0		
									point3	3	3,392.4	2,966.4	20.00	20.00	0.00	0	0		
									point4	4	3,516.4	2,966.4	20.00	20.00	0.00	0	0		
									point5	5	3,515.7	3,066.3	20.00	20.00					
Barrier1-2-2-2	W	0.00	99.99	0.00				0.00	point73	73	2,802.5	2,984.3	20.00	20.00	0.00	0	0		
									point17	17	3,188.2	2,967.8	20.00	20.00	0.00	0	0		
									point18	18	3,202.0	2,739.1	20.00	20.00	0.00	0	0		
									point19	19	2,805.2	2,730.9	20.00	20.00					
Barrier1-2-2-2-2	W	0.00	99.99	0.00				0.00	point74	74	3,268.1	2,921.0	20.00	20.00	0.00	0	0		
									point21	21	3,359.0	2,912.7	20.00	20.00	0.00	0	0		
									point22	22	3,361.8	2,752.9	20.00	20.00	0.00	0	0		
									point23	23	3,276.4	2,752.9	20.00	20.00					
Barrier1-2-2-2-2-2	W	0.00	99.99	0.00				0.00	point75	75	3,416.9	2,846.6	20.00	20.00	0.00	0	0		
									point25	25	3,518.8	2,846.6	20.00	20.00	0.00	0	0		
									point26	26	3,524.4	2,750.1	20.00	20.00	0.00	0	0		
									point27	27	3,430.7	2,752.9	20.00	20.00					
Barrier1-2-2-2-2-2	W	0.00	99.99	0.00				0.00	point76	76	3,816.4	2,945.8	20.00	20.00	0.00	0	0		
									point35	35	3,926.6	2,943.0	20.00	20.00	0.00	0	0		
									point36	36	3,932.1	2,761.2	20.00	20.00	0.00	0	0		
									point37	37	3,863.2	2,761.2	20.00	20.00	0.00	0	0		
									point38	38	3,863.2	2,846.6	20.00	20.00	0.00	0	0		
									point39	39	3,816.4	2,843.8	20.00	20.00					
Barrier1-2-2-2-2-2	W	0.00	99.99	0.00				0.00	point77	77	4,003.8	2,951.3	20.00	20.00	0.00	0	0		
									point41	41	4,147.0	2,945.8	20.00	20.00	0.00	0	0		
									point42	42	4,144.3	2,744.6	20.00	20.00	0.00	0	0		
									point43	43	4,003.8	2,739.1	20.00	20.00					
Barrier1-2-2-2-2-2	W	0.00	99.99	0.00				0.00	point78	78	3,590.5	2,954.0	20.00	20.00	0.00	0	0		
									point29	29	3,711.7	2,948.5	20.00	20.00	0.00	0	0		
									point30	30	3,714.5	2,838.3	20.00	20.00	0.00	0	0		
									point31	31	3,788.9	2,835.6	20.00	20.00	0.00	0	0		
									point32	32	3,794.4	2,750.1	20.00	20.00	0.00	0	0		
									point33	33	3,598.8	2,750.1	20.00	20.00					
Barrier1-2-2-2	W	0.00	99.99	0.00				0.00	point79	79	2,667.5	2,921.0	20.00	20.00	0.00	0	0		
									point11	11	2,744.6	2,921.0	20.00	20.00	0.00	0	0		
									point12	12	2,736.3	2,744.6	20.00	20.00	0.00	0	0		

									point13	13	2,598.6	2,739.1	20.00	20.00	0.00	0	0		
									point14	14	2,606.8	2,788.7	20.00	20.00	0.00	0	0		
									point15	15	2,661.9	2,805.3	20.00	20.00					
Barrier1-2-2-2-2-2	W	0.00	99.99	0.00				0.00	point80	80	3,493.5	1,623.0	20.00	20.00	0.00	0	0		
									point45	45	4,116.2	1,623.0	20.00	20.00	0.00	0	0		
									point46	46	4,198.8	917.7	20.00	20.00	0.00	0	0		
									point47	47	3,465.9	928.7	20.00	20.00					
Barrier1-2-2-2-2-2-2-2	W	0.00	99.99	0.00				0.00	point82	82	2,639.4	1,545.9	20.00	20.00	0.00	0	0		
									point49	49	2,678.0	1,606.5	20.00	20.00	0.00	0	0		
									point50	50	2,810.2	1,601.0	20.00	20.00	0.00	0	0		
									point51	51	2,848.8	1,716.7	20.00	20.00	0.00	0	0		
									point52	52	3,019.6	1,711.2	20.00	20.00	0.00	0	0		
									point53	53	3,085.7	1,766.3	20.00	20.00	0.00	0	0		
									point54	54	3,355.7	1,755.3	20.00	20.00	0.00	0	0		
									point55	55	3,339.2	906.7	20.00	20.00	0.00	0	0		
									point56	56	2,424.5	901.2	20.00	20.00	0.00	0	0		
									point57	57	2,435.5	1,237.3	20.00	20.00					
Barrier1-2-2-2-2-2-2-2-2	W	0.00	99.99	0.00				0.00	point83	83	2,435.5	1,237.3	20.00	20.00	0.00	0	0		
									point58	58	2,650.4	1,253.8	20.00	20.00					
Barrier1-2-2-2	W	0.00	99.99	0.00				0.00	point84	84	1,289.3	2,592.9	20.00	20.00	0.00	0	0		
									point60	60	2,176.5	2,570.8	20.00	20.00	0.00	0	0		
									point61	61	1,862.4	1,022.4	20.00	20.00	0.00	0	0		
									point2	2	1,168.1	994.9	20.00	20.00					
Barrier25	W	0.00	99.99	0.00				0.00	point85	85	3,878.0	3,142.0	20.00	30.00	0.00	0	0		
									point86	86	4,026.0	3,142.0	20.00	30.00	0.00	0	0		
									point87	87	4,025.0	3,496.5	20.00	30.00	0.00	0	0		
									point88	88	3,878.0	3,496.5	20.00	30.00					

Dudek
MG
4 October 2019
TNM 2.5
Calculated with TNM 2.5

RESULTS: SOUND LEVELS
PROJECT/CONTRACT: 10029.10
RUN: KL Fenix - Ex with Proj
BARRIER DESIGN: INPUT HEIGHTS
ATMOSPHERICS: 68 deg F, 50% RH

Average pavement type shall be used unless a State highway agency substantiates the use of a different type with approval of FHWA.

Receiver Name	No.	#DUs	Existing LAeq1h	No Barrier LAeq1h Calculated	Crit'n	Increase over existing Calculated	Crit'n Sub'l Inc	Type Impact	With Barrier Calculated LAeq1h	Noise Reduction Calculated	Goal	Calculated minus Goal
			dBA	dBA	dBA	dB	dB		dBA	dB	dB	dB
ST1	2	1	0.0	66.2	66	66.2	10	Snd Lvl	66.2	0.0	8	-8.0
ST2	3	1	0.0	70.2	66	70.2	10	Snd Lvl	70.2	0.0	8	-8.0
ST3	4	1	0.0	72.7	66	72.7	10	Snd Lvl	72.7	0.0	8	-8.0
ST4	5	1	0.0	71.6	66	71.6	10	Snd Lvl	71.6	0.0	8	-8.0
ST5	6	1	0.0	71.9	66	71.9	10	Snd Lvl	71.9	0.0	8	-8.0
ST6	8	1	0.0	71.6	66	71.6	10	Snd Lvl	71.6	0.0	8	-8.0

Dwelling Units	# DUs	Noise Reduction Min	Avg	Max
		dB	dB	dB
All Selected	6	0.0	0.0	0.0
All Impacted	6	0.0	0.0	0.0
All that meet NR Goal	0	0.0	0.0	0.0

Dudek					**4 October 2019**						
MG					**TNM 2.5**						
INPUT: ROADWAYS							**Average pavement type shall be used unless**				
PROJECT/CONTRACT:	**10029.10**						**a State highway agency substantiates the use**				
RUN:	**KL Fenix - Future**						**of a different type with the approval of FHWA**				
Roadway		**Points**									
Name	**Width**	**Name**	**No.**	**Coordinates (pavement)**			**Flow Control**			**Segment**	
				X	**Y**	**Z**	**Control Device**	**Speed Constraint**	**Percent Vehicles Affected**	**Pvmt Type**	**On Struct?**
	ft			ft	ft	ft		mph	%		
I-110	150.0	point1	1	1,933.1	673.5	40.00				Average	
		point3	3	1,985.6	1,089.0	40.00				Average	
		point4	4	2,108.1	1,723.2	40.00				Average	
		point5	5	2,318.0	2,694.1	40.00				Average	
		point6	6	2,671.7	4,220.2	40.00					
Torrance Blvd - Vermont Ave to Figuero	55.0	point53	53	1,141.5	2,667.9	20.00				Average	
		point8	8	2,252.4	2,681.0	20.00					
Main St. - South of Torrance Ave	70.0	point58	58	4,405.7	630.1	20.00				Average	
		point14	14	4,344.4	905.7	20.00				Average	
		point15	15	4,298.5	1,152.8	20.00				Average	
		point16	16	4,272.3	1,631.7	20.00				Average	
		point17	17	4,232.9	2,305.2	20.00				Average	
		point18	18	4,215.4	2,672.6	20.00				Average	
		point19	19	4,212.2	2,719.4	20.00					
Vermont Ave	55.0	point60	60	1,046.4	678.4	20.00				Average	
		point39	39	1,055.1	1,026.1	20.00				Average	
		point40	40	1,112.0	1,540.1	20.00				Average	
		point41	41	1,122.4	2,670.0	20.00				Average	
		point42	42	1,085.9	2,968.5	20.00				Average	
		point43	43	1,036.3	3,425.9	20.00					
Torrance Blvd - E. of Main St	55.0	point66	66	4,222.5	2,697.2	20.00				Average	
		point12	12	4,731.4	2,690.1	20.00					
Torrance Blvd - Main St to Figueroa	55.0	point67	67	2,416.9	2,682.6	20.00				Average	
		point10	10	4,208.7	2,695.9	20.00					
Main St. - North of Torrance Ave	70.0	point77	77	4,212.2	2,719.4	20.00				Average	

		point20	20	4,165.6	3,766.0	20.00				Average	
		point21	21	4,143.0	4,203.4	20.00				Average	
		point22	22	4,130.1	4,701.1	20.00					
Figueroa St - Torrance Blvd. to 214th St	90.0	point62	62	2,344.8	602.3	20.00				Average	
		point26	26	2,344.8	869.1	20.00				Average	
		point27	27	2,331.7	1,380.9	20.00				Average	
		point28	28	2,336.0	1,940.7	20.00				Average	
		point29	29	2,401.6	2,347.5	20.00				Average	
		point71	71	2,487.5	2,678.8	20.00					
Figueroa St - Del Amo Blvd. to Torrance	90.0	point74	74	2,494.3	2,699.2	20.00				Average	
		point70	70	2,511.0	2,767.3	20.00				Average	
		point32	32	2,804.0	3,449.6	20.00				Average	
		point76	76	2,808.5	3,452.3	20.00				Average	
		point45	45	2,846.6	3,625.9	20.00				Average	
		point46	46	2,881.4	3,889.8	20.00				Average	
		point47	47	2,874.4	4,170.9	20.00					

Dudek **4 October 2019**
MG **TNM 2.5**

INPUT: TRAFFIC FOR LAeq1h Volumes
PROJECT/CONTRACT: **10029.10**
RUN: **KL Fenix - Future**

Roadway	Points		Segment									
Name	Name	No.	Autos		MTrucks		HTrucks		Buses		Motorcycles	
			V	S	V	S	V	S	V	S	V	S
			veh/hr	mph	veh/hr	mph	veh/hr	mph	veh/hr	mph	veh/hr	mph
I-110	point1	1	20900	65	660	65	440	65	0	0	0	0
	point3	3	20900	65	660	65	440	65	0	0	0	0
	point4	4	20900	65	660	65	440	65	0	0	0	0
	point5	5	20900	65	660	65	440	65	0	0	0	0
	point6	6										
Torrance Blvd - Vermont Ave to Figuero	point53	53	2635	40	55	40	83	40	0	0	0	0
	point8	8										
Main St. - South of Torrance Ave	point58	58	2404	45	51	45	76	45	0	0	0	0
	point14	14	2404	45	51	45	76	45	0	0	0	0
	point15	15	2404	45	51	45	76	45	0	0	0	0
	point16	16	2404	45	51	45	76	45	0	0	0	0
	point17	17	2404	45	51	45	76	45	0	0	0	0
	point18	18	2404	45	51	45	76	45	0	0	0	0
	point19	19										
Vermont Ave	point60	60	0	0	0	0	0	0	0	0	0	0
	point39	39	0	0	0	0	0	0	0	0	0	0
	point40	40	0	0	0	0	0	0	0	0	0	0
	point41	41	0	0	0	0	0	0	0	0	0	0
	point42	42	0	0	0	0	0	0	0	0	0	0
	point43	43										
Torrance Blvd - E. of Main St	point66	66	170	25	4	25	5	25	0	0	0	0
	point12	12										
Torrance Blvd - Main St to Figueroa	point67	67	1998	40	42	40	63	40	0	0	0	0

	point10	10										
Main St. - North of Torrance Ave	point77	77	2891	45	61	45	91	45	0	0	0	0
	point20	20	2891	45	61	45	91	45	0	0	0	0
	point21	21	2891	45	61	45	91	45	0	0	0	0
	point22	22										
Figueroa St - Torrance Blvd. to 214th St	point62	62	1372	40	29	40	43	40	0	0	0	0
	point26	26	1372	40	29	40	43	40	0	0	0	0
	point27	27	1372	40	29	40	43	40	0	0	0	0
	point28	28	1372	40	29	40	43	40	0	0	0	0
	point29	29	1372	40	29	40	43	40	0	0	0	0
	point71	71										
Figueroa St - Del Amo Blvd. to Torrance	point74	74	2324	40	49	40	73	40	0	0	0	0
	point70	70	2324	40	49	40	73	40	0	0	0	0
	point32	32	2324	40	49	40	73	40	0	0	0	0
	point76	76	2324	40	49	40	73	40	0	0	0	0
	point45	45	2324	40	49	40	73	40	0	0	0	0
	point46	46	2324	40	49	40	73	40	0	0	0	0
	point47	47										

Dudek 4 October 2019
MG TNM 2.5

INPUT: RECEIVERS
PROJECT/CONTRACT: 10029.10
RUN: KL Fenix - Future

Receiver Name	No.	#DUs	Coordinates (ground) X	Y	Z	Height above Ground	Input Sound Levels and Criteria: Existing LAeq1h	Impact Criteria LAeq1h	Impact Criteria Sub'l	NR Goal	Active in Calc.
			ft	ft	ft	ft	dBA	dBA	dB	dB	
ST1	2	1	3,059.2	3,086.6	20.00	5.00	0.00	66	10.0	8.0	Y
ST2	3	1	3,939.8	2,732.4	20.00	5.00	0.00	66	10.0	8.0	Y
ST3	4	1	4,226.3	3,293.4	20.00	5.00	0.00	66	10.0	8.0	Y
ST4	5	1	4,276.9	2,356.6	20.00	5.00	0.00	66	10.0	8.0	Y
ST5	6	1	4,301.8	1,880.6	20.00	5.00	0.00	66	10.0	8.0	Y
ST6	8	1	1,745.5	2,625.0	20.00	5.00	0.00	66	10.0	8.0	Y

Dudek 4 October 2019
MG TNM 2.5

INPUT: BARRIERS
PROJECT/CONTRACT: 10029.10
RUN: KL Fenix - Future

Barrier									Points										
Name	Type	Height		If Wall	If Berm			Add'tnl	Name	No.	Coordinates (bottom)			Height	Segment				
		Min	Max	$ per Unit Area	$ per Unit Vol.	Top Width	Run:Rise	$ per Unit Length			X	Y	Z	at Point	Seg Ht Incre-ment	Perturbs #Up	#Dn	On Struct?	Important Reflec-tions?
		ft	ft	$/sq ft	$/cu yd	ft	ft:ft	$/ft			ft	ft	ft	ft	ft				
Barrier1	W	0.00	99.99	0.00				0.00	point1	1	3,391.0	3,060.8	20.00	20.00	0.00	0	0		
									point3	3	3,392.4	2,966.4	20.00	20.00	0.00	0	0		
									point4	4	3,516.4	2,966.4	20.00	20.00	0.00	0	0		
									point5	5	3,515.7	3,066.3	20.00	20.00					
Barrier1-2-2-2	W	0.00	99.99	0.00				0.00	point73	73	2,802.5	2,984.3	20.00	20.00	0.00	0	0		
									point17	17	3,188.2	2,967.8	20.00	20.00	0.00	0	0		
									point18	18	3,202.0	2,739.1	20.00	20.00	0.00	0	0		
									point19	19	2,805.2	2,730.9	20.00	20.00					
Barrier1-2-2-2-2	W	0.00	99.99	0.00				0.00	point74	74	3,268.1	2,921.0	20.00	20.00	0.00	0	0		
									point21	21	3,359.0	2,912.7	20.00	20.00	0.00	0	0		
									point22	22	3,361.8	2,752.9	20.00	20.00	0.00	0	0		
									point23	23	3,276.4	2,752.9	20.00	20.00					
Barrier1-2-2-2-2-2	W	0.00	99.99	0.00				0.00	point75	75	3,416.9	2,846.6	20.00	20.00	0.00	0	0		
									point25	25	3,518.8	2,846.6	20.00	20.00	0.00	0	0		
									point26	26	3,524.4	2,750.1	20.00	20.00	0.00	0	0		
									point27	27	3,430.7	2,752.9	20.00	20.00					
Barrier1-2-2-2-2-2	W	0.00	99.99	0.00				0.00	point76	76	3,816.4	2,945.8	20.00	20.00	0.00	0	0		
									point35	35	3,926.6	2,943.0	20.00	20.00	0.00	0	0		
									point36	36	3,932.1	2,761.2	20.00	20.00	0.00	0	0		
									point37	37	3,863.2	2,761.2	20.00	20.00	0.00	0	0		
									point38	38	3,863.2	2,846.6	20.00	20.00	0.00	0	0		
									point39	39	3,816.4	2,843.8	20.00	20.00					
Barrier1-2-2-2-2-2	W	0.00	99.99	0.00				0.00	point77	77	4,003.8	2,951.3	20.00	20.00	0.00	0	0		
									point41	41	4,147.0	2,945.8	20.00	20.00	0.00	0	0		
									point42	42	4,144.3	2,744.6	20.00	20.00	0.00	0	0		
									point43	43	4,003.8	2,739.1	20.00	20.00					
Barrier1-2-2-2-2-2	W	0.00	99.99	0.00				0.00	point78	78	3,590.5	2,954.0	20.00	20.00	0.00	0	0		
									point29	29	3,711.7	2,948.5	20.00	20.00	0.00	0	0		
									point30	30	3,714.5	2,838.3	20.00	20.00	0.00	0	0		
									point31	31	3,788.9	2,835.6	20.00	20.00	0.00	0	0		
									point32	32	3,794.4	2,750.1	20.00	20.00	0.00	0	0		
									point33	33	3,598.8	2,750.1	20.00	20.00					
Barrier1-2-2-2	W	0.00	99.99	0.00				0.00	point79	79	2,667.5	2,921.0	20.00	20.00	0.00	0	0		
									point11	11	2,744.6	2,921.0	20.00	20.00	0.00	0	0		
									point12	12	2,736.3	2,744.6	20.00	20.00	0.00	0	0		

									point13	13	2,598.6	2,739.1	20.00	20.00	0.00	0	0		
									point14	14	2,606.8	2,788.7	20.00	20.00	0.00	0	0		
									point15	15	2,661.9	2,805.3	20.00	20.00					
Barrier1-2-2-2-2-2	W	0.00	99.99	0.00				0.00	point80	80	3,493.5	1,623.0	20.00	20.00	0.00	0	0		
									point45	45	4,116.2	1,623.0	20.00	20.00	0.00	0	0		
									point46	46	4,198.8	917.7	20.00	20.00	0.00	0	0		
									point47	47	3,465.9	928.7	20.00	20.00					
Barrier1-2-2-2-2-2-2-2	W	0.00	99.99	0.00				0.00	point82	82	2,639.4	1,545.9	20.00	20.00	0.00	0	0		
									point49	49	2,678.0	1,606.5	20.00	20.00	0.00	0	0		
									point50	50	2,810.2	1,601.0	20.00	20.00	0.00	0	0		
									point51	51	2,848.8	1,716.7	20.00	20.00	0.00	0	0		
									point52	52	3,019.6	1,711.2	20.00	20.00	0.00	0	0		
									point53	53	3,085.7	1,766.3	20.00	20.00	0.00	0	0		
									point54	54	3,355.7	1,755.3	20.00	20.00	0.00	0	0		
									point55	55	3,339.2	906.7	20.00	20.00	0.00	0	0		
									point56	56	2,424.5	901.2	20.00	20.00	0.00	0	0		
									point57	57	2,435.5	1,237.3	20.00	20.00					
Barrier1-2-2-2-2-2-2-2-2	W	0.00	99.99	0.00				0.00	point83	83	2,435.5	1,237.3	20.00	20.00	0.00	0	0		
									point58	58	2,650.4	1,253.8	20.00	20.00					
Barrier1-2-2-2	W	0.00	99.99	0.00				0.00	point84	84	1,289.3	2,592.9	20.00	20.00	0.00	0	0		
									point60	60	2,176.5	2,570.8	20.00	20.00	0.00	0	0		
									point61	61	1,862.4	1,022.4	20.00	20.00	0.00	0	0		
									point2	2	1,168.1	994.9	20.00	20.00					

Dudek
MG
4 October 2019
TNM 2.5
Calculated with TNM 2.5

RESULTS: SOUND LEVELS
PROJECT/CONTRACT: 10029.10
RUN: KL Fenix - Future
BARRIER DESIGN: INPUT HEIGHTS
ATMOSPHERICS: 68 deg F, 50% RH

Average pavement type shall be used unless a State highway agency substantiates the use of a different type with approval of FHWA.

Receiver Name	No.	#DUs	Existing LAeq1h	No Barrier LAeq1h Calculated	Crit'n	Increase over existing Calculated	Crit'n Sub'l Inc	Type Impact	With Barrier Calculated LAeq1h	Noise Reduction Calculated	Goal	Calculated minus Goal
			dBA	dBA	dBA	dB	dB		dBA	dB	dB	dB
ST1	2	1	0.0	66.3	66	66.3	10	Snd Lvl	66.3	0.0	8	-8.0
ST2	3	1	0.0	71.6	66	71.6	10	Snd Lvl	71.6	0.0	8	-8.0
ST3	4	1	0.0	74.4	66	74.4	10	Snd Lvl	74.4	0.0	8	-8.0
ST4	5	1	0.0	72.8	66	72.8	10	Snd Lvl	72.8	0.0	8	-8.0
ST5	6	1	0.0	73.0	66	73.0	10	Snd Lvl	73.0	0.0	8	-8.0
ST6	8	1	0.0	72.2	66	72.2	10	Snd Lvl	72.2	0.0	8	-8.0

Dwelling Units	# DUs	Noise Reduction Min	Avg	Max
		dB	dB	dB
All Selected	6	0.0	0.0	0.0
All Impacted	6	0.0	0.0	0.0
All that meet NR Goal	0	0.0	0.0	0.0

Dudek 4 October 2019
MG TNM 2.5

INPUT: ROADWAYS
PROJECT/CONTRACT: 10029.10
RUN: KL Fenix - Future with Proj

Average pavement type shall be used unless a State highway agency substantiates the use of a different type with the approval of FHWA

Roadway Name	Width	Points Name	No.	Coordinates (pavement) X	Y	Z	Flow Control Control Device	Speed Constraint	Percent Vehicles Affected	Segment Pvmt Type	On Struct?
	ft			ft	ft	ft		mph	%		
I-110	150.0	point1	1	1,933.1	673.5	40.00				Average	
		point3	3	1,985.6	1,089.0	40.00				Average	
		point4	4	2,108.1	1,723.2	40.00				Average	
		point5	5	2,318.0	2,694.1	40.00				Average	
		point6	6	2,671.7	4,220.2	40.00					
Torrance Blvd - Vermont Ave to Figuero	55.0	point53	53	1,141.5	2,667.9	20.00				Average	
		point8	8	2,252.4	2,681.0	20.00					
Main St. - South of Torrance Ave	70.0	point58	58	4,405.7	630.1	20.00				Average	
		point14	14	4,344.4	905.7	20.00				Average	
		point15	15	4,298.5	1,152.8	20.00				Average	
		point16	16	4,272.3	1,631.7	20.00				Average	
		point17	17	4,232.9	2,305.2	20.00				Average	
		point18	18	4,215.4	2,672.6	20.00				Average	
		point19	19	4,212.2	2,719.4	20.00					
Vermont Ave	55.0	point60	60	1,046.4	678.4	20.00				Average	
		point39	39	1,055.1	1,026.1	20.00				Average	
		point40	40	1,112.0	1,540.1	20.00				Average	
		point41	41	1,122.4	2,670.0	20.00				Average	
		point42	42	1,085.9	2,968.5	20.00				Average	
		point43	43	1,036.3	3,425.9	20.00					
Torrance Blvd - E. of Main St	55.0	point66	66	4,222.5	2,697.2	20.00				Average	
		point12	12	4,731.4	2,690.1	20.00					
Torrance Blvd - Main St to Figueroa	55.0	point67	67	2,416.9	2,682.6	20.00				Average	
		point10	10	4,208.7	2,695.9	20.00					
Main St. - North of Torrance Ave	70.0	point77	77	4,212.2	2,719.4	20.00				Average	

		point20	20	4,165.6	3,766.0	20.00				Average	
		point21	21	4,143.0	4,203.4	20.00				Average	
		point22	22	4,130.1	4,701.1	20.00					
Figueroa St - Torrance Blvd. to 214th St	90.0	point62	62	2,344.8	602.3	20.00				Average	
		point26	26	2,344.8	869.1	20.00				Average	
		point27	27	2,331.7	1,380.9	20.00				Average	
		point28	28	2,336.0	1,940.7	20.00				Average	
		point29	29	2,401.6	2,347.5	20.00				Average	
		point71	71	2,487.5	2,678.8	20.00					
Figueroa St - Del Amo Blvd. to Torrance	90.0	point74	74	2,494.3	2,699.2	20.00				Average	
		point70	70	2,511.0	2,767.3	20.00				Average	
		point32	32	2,804.0	3,449.6	20.00				Average	
		point76	76	2,808.5	3,452.3	20.00				Average	
		point45	45	2,846.6	3,625.9	20.00				Average	
		point46	46	2,881.4	3,889.8	20.00				Average	
		point47	47	2,874.4	4,170.9	20.00					

Dudek **4 October 2019**
MG **TNM 2.5**

INPUT: TRAFFIC FOR LAeq1h Volumes
PROJECT/CONTRACT: **10029.10**
RUN: **KL Fenix - Future with Proj**

Roadway	Points		Segment									
Name	Name	No.	Autos		MTrucks		HTrucks		Buses		Motorcycles	
			V	S	V	S	V	S	V	S	V	S
			veh/hr	mph	veh/hr	mph	veh/hr	mph	veh/hr	mph	veh/hr	mph
I-110	point1	1	20900	65	660	65	440	65	0	0	0	0
	point3	3	20900	65	660	65	440	65	0	0	0	0
	point4	4	20900	65	660	65	440	65	0	0	0	0
	point5	5	20900	65	660	65	440	65	0	0	0	0
	point6	6										
Torrance Blvd - Vermont Ave to Figuero	point53	53	2640	40	56	40	83	40	0	0	0	0
	point8	8										
Main St. - South of Torrance Ave	point58	58	2404	45	51	45	76	45	0	0	0	0
	point14	14	2404	45	51	45	76	45	0	0	0	0
	point15	15	2404	45	51	45	76	45	0	0	0	0
	point16	16	2404	45	51	45	76	45	0	0	0	0
	point17	17	2404	45	51	45	76	45	0	0	0	0
	point18	18	2404	45	51	45	76	45	0	0	0	0
	point19	19										
Vermont Ave	point60	60	0	0	0	0	0	0	0	0	0	0
	point39	39	0	0	0	0	0	0	0	0	0	0
	point40	40	0	0	0	0	0	0	0	0	0	0
	point41	41	0	0	0	0	0	0	0	0	0	0
	point42	42	0	0	0	0	0	0	0	0	0	0
	point43	43										
Torrance Blvd - E. of Main St	point66	66	170	25	4	25	5	25	0	0	0	0
	point12	12										
Torrance Blvd - Main St to Figueroa	point67	67	2042	40	43	40	64	40	0	0	0	0

	point10	10										
Main St. - North of Torrance Ave	point77	77	2935	45	62	45	93	45	0	0	0	0
	point20	20	2935	45	62	45	93	45	0	0	0	0
	point21	21	2935	45	62	45	93	45	0	0	0	0
	point22	22										
Figueroa St - Torrance Blvd. to 214th St	point62	62	1376	40	29	40	43	40	0	0	0	0
	point26	26	1376	40	29	40	43	40	0	0	0	0
	point27	27	1376	40	29	40	43	40	0	0	0	0
	point28	28	1376	40	29	40	43	40	0	0	0	0
	point29	29	1376	40	29	40	43	40	0	0	0	0
	point71	71										
Figueroa St - Del Amo Blvd. to Torrance	point74	74	2361	40	50	40	75	40	0	0	0	0
	point70	70	2361	40	50	40	75	40	0	0	0	0
	point32	32	2361	40	50	40	75	40	0	0	0	0
	point76	76	2361	40	50	40	75	40	0	0	0	0
	point45	45	2361	40	50	40	75	40	0	0	0	0
	point46	46	2361	40	50	40	75	40	0	0	0	0
	point47	47										

Dudek						**4 October 2019**					
MG						**TNM 2.5**					
INPUT: RECEIVERS											
PROJECT/CONTRACT:	**10029.10**										
RUN:	**KL Fenix - Future with Proj**										
Receiver											
Name	**No.**	**#DUs**	**Coordinates (ground)**			**Height**	**Input Sound Levels and Criteria**				**Active**
			X	**Y**	**Z**	**above**	**Existing**	**Impact Criteria**		**NR**	**in**
						Ground	**LAeq1h**	**LAeq1h**	**Sub'l**	**Goal**	**Calc.**
			ft	ft	ft	ft	dBA	dBA	dB	dB	
ST1	2	1	3,059.2	3,086.6	20.00	5.00	0.00	66	10.0	8.0	Y
ST2	3	1	3,939.8	2,732.4	20.00	5.00	0.00	66	10.0	8.0	Y
ST3	4	1	4,226.3	3,293.4	20.00	5.00	0.00	66	10.0	8.0	Y
ST4	5	1	4,276.9	2,356.6	20.00	5.00	0.00	66	10.0	8.0	Y
ST5	6	1	4,301.8	1,880.6	20.00	5.00	0.00	66	10.0	8.0	Y
ST6	8	1	1,745.5	2,625.0	20.00	5.00	0.00	66	10.0	8.0	Y

Dudek 4 October 2019
MG TNM 2.5

INPUT: BARRIERS
PROJECT/CONTRACT: 10029.10
RUN: KL Fenix - Future with Proj

Barrier									Points										
Name	Type	Height		If Wall	If Berm			Add'tnl	Name	No.	Coordinates (bottom)			Height	Segment				
		Min	Max	$ per Unit Area	$ per Unit Vol.	Top Width	Run:Rise	$ per Unit Length			X	Y	Z	at Point	Seg Ht Incre-ment	Perturbs #Up	#Dn	On Struct?	Important Reflec-tions?
		ft	ft	$/sq ft	$/cu yd	ft	ft:ft	$/ft			ft	ft	ft	ft	ft				
Barrier1	W	0.00	99.99	0.00				0.00	point1	1	3,391.0	3,060.8	20.00	20.00	0.00	0	0		
									point3	3	3,392.4	2,966.4	20.00	20.00	0.00	0	0		
									point4	4	3,516.4	2,966.4	20.00	20.00	0.00	0	0		
									point5	5	3,515.7	3,066.3	20.00	20.00					
Barrier1-2-2-2	W	0.00	99.99	0.00				0.00	point73	73	2,802.5	2,984.3	20.00	20.00	0.00	0	0		
									point17	17	3,188.2	2,967.8	20.00	20.00	0.00	0	0		
									point18	18	3,202.0	2,739.1	20.00	20.00	0.00	0	0		
									point19	19	2,805.2	2,730.9	20.00	20.00					
Barrier1-2-2-2-2	W	0.00	99.99	0.00				0.00	point74	74	3,268.1	2,921.0	20.00	20.00	0.00	0	0		
									point21	21	3,359.0	2,912.7	20.00	20.00	0.00	0	0		
									point22	22	3,361.8	2,752.9	20.00	20.00	0.00	0	0		
									point23	23	3,276.4	2,752.9	20.00	20.00					
Barrier1-2-2-2-2-2	W	0.00	99.99	0.00				0.00	point75	75	3,416.9	2,846.6	20.00	20.00	0.00	0	0		
									point25	25	3,518.8	2,846.6	20.00	20.00	0.00	0	0		
									point26	26	3,524.4	2,750.1	20.00	20.00	0.00	0	0		
									point27	27	3,430.7	2,752.9	20.00	20.00					
Barrier1-2-2-2-2-2	W	0.00	99.99	0.00				0.00	point76	76	3,816.4	2,945.8	20.00	20.00	0.00	0	0		
									point35	35	3,926.6	2,943.0	20.00	20.00	0.00	0	0		
									point36	36	3,932.1	2,761.2	20.00	20.00	0.00	0	0		
									point37	37	3,863.2	2,761.2	20.00	20.00	0.00	0	0		
									point38	38	3,863.2	2,846.6	20.00	20.00	0.00	0	0		
									point39	39	3,816.4	2,843.8	20.00	20.00					
Barrier1-2-2-2-2-2	W	0.00	99.99	0.00				0.00	point77	77	4,003.8	2,951.3	20.00	20.00	0.00	0	0		
									point41	41	4,147.0	2,945.8	20.00	20.00	0.00	0	0		
									point42	42	4,144.3	2,744.6	20.00	20.00	0.00	0	0		
									point43	43	4,003.8	2,739.1	20.00	20.00					
Barrier1-2-2-2-2-2	W	0.00	99.99	0.00				0.00	point78	78	3,590.5	2,954.0	20.00	20.00	0.00	0	0		
									point29	29	3,711.7	2,948.5	20.00	20.00	0.00	0	0		
									point30	30	3,714.5	2,838.3	20.00	20.00	0.00	0	0		
									point31	31	3,788.9	2,835.6	20.00	20.00	0.00	0	0		
									point32	32	3,794.4	2,750.1	20.00	20.00	0.00	0	0		
									point33	33	3,598.8	2,750.1	20.00	20.00					
Barrier1-2-2-2	W	0.00	99.99	0.00				0.00	point79	79	2,667.5	2,921.0	20.00	20.00	0.00	0	0		
									point11	11	2,744.6	2,921.0	20.00	20.00	0.00	0	0		
									point12	12	2,736.3	2,744.6	20.00	20.00	0.00	0	0		

									point13	13	2,598.6	2,739.1	20.00	20.00	0.00	0	0		
									point14	14	2,606.8	2,788.7	20.00	20.00	0.00	0	0		
									point15	15	2,661.9	2,805.3	20.00	20.00					
Barrier1-2-2-2-2-2	W	0.00	99.99	0.00				0.00	point80	80	3,493.5	1,623.0	20.00	20.00	0.00	0	0		
									point45	45	4,116.2	1,623.0	20.00	20.00	0.00	0	0		
									point46	46	4,198.8	917.7	20.00	20.00	0.00	0	0		
									point47	47	3,465.9	928.7	20.00	20.00					
Barrier1-2-2-2-2-2-2-2	W	0.00	99.99	0.00				0.00	point82	82	2,639.4	1,545.9	20.00	20.00	0.00	0	0		
									point49	49	2,678.0	1,606.5	20.00	20.00	0.00	0	0		
									point50	50	2,810.2	1,601.0	20.00	20.00	0.00	0	0		
									point51	51	2,848.8	1,716.7	20.00	20.00	0.00	0	0		
									point52	52	3,019.6	1,711.2	20.00	20.00	0.00	0	0		
									point53	53	3,085.7	1,766.3	20.00	20.00	0.00	0	0		
									point54	54	3,355.7	1,755.3	20.00	20.00	0.00	0	0		
									point55	55	3,339.2	906.7	20.00	20.00	0.00	0	0		
									point56	56	2,424.5	901.2	20.00	20.00	0.00	0	0		
									point57	57	2,435.5	1,237.3	20.00	20.00					
Barrier1-2-2-2-2-2-2-2-2	W	0.00	99.99	0.00				0.00	point83	83	2,435.5	1,237.3	20.00	20.00	0.00	0	0		
									point58	58	2,650.4	1,253.8	20.00	20.00					
Barrier1-2-2-2	W	0.00	99.99	0.00				0.00	point84	84	1,289.3	2,592.9	20.00	20.00	0.00	0	0		
									point60	60	2,176.5	2,570.8	20.00	20.00	0.00	0	0		
									point61	61	1,862.4	1,022.4	20.00	20.00	0.00	0	0		
									point2	2	1,168.1	994.9	20.00	20.00					
Barrier25	W	0.00	99.99	0.00				0.00	point85	85	3,878.0	3,142.0	20.00	30.00	0.00	0	0		
									point86	86	4,026.0	3,142.0	20.00	30.00	0.00	0	0		
									point87	87	4,025.0	3,496.5	20.00	30.00	0.00	0	0		
									point88	88	3,878.0	3,496.5	20.00	30.00					

Dudek
MG
4 October 2019
TNM 2.5
Calculated with TNM 2.5

RESULTS: SOUND LEVELS
PROJECT/CONTRACT: 10029.10
RUN: KL Fenix - Future with Proj
BARRIER DESIGN: INPUT HEIGHTS
ATMOSPHERICS: 68 deg F, 50% RH

Average pavement type shall be used unless a State highway agency substantiates the use of a different type with approval of FHWA.

Receiver Name	No.	#DUs	Existing LAeq1h	No Barrier LAeq1h Calculated	Crit'n	Increase over existing Calculated	Crit'n Sub'l Inc	Type Impact	With Barrier Calculated LAeq1h	Noise Reduction Calculated	Goal	Calculated minus Goal
			dBA	dBA	dBA	dB	dB		dBA	dB	dB	dB
ST1	2	1	0.0	66.3	66	66.3	10	Snd Lvl	66.3	0.0	8	-8.0
ST2	3	1	0.0	71.7	66	71.7	10	Snd Lvl	71.7	0.0	8	-8.0
ST3	4	1	0.0	74.4	66	74.4	10	Snd Lvl	74.4	0.0	8	-8.0
ST4	5	1	0.0	72.8	66	72.8	10	Snd Lvl	72.8	0.0	8	-8.0
ST5	6	1	0.0	73.0	66	73.0	10	Snd Lvl	73.0	0.0	8	-8.0
ST6	8	1	0.0	72.2	66	72.2	10	Snd Lvl	72.2	0.0	8	-8.0

Dwelling Units	# DUs	Noise Reduction Min	Avg	Max
		dB	dB	dB
All Selected	6	0.0	0.0	0.0
All Impacted	6	0.0	0.0	0.0
All that meet NR Goal	0	0.0	0.0	0.0

Attachment D

On-Site Mechanical Noise Calculations

MECHANICAL EQUIPMENT NOISE LEVEL

Location:			
East Resi P.L.	1601	633	0

Equip Site	Source Coordinates X	Y	Z	Receiver Coordinates X	Y	Location-Equipment	Leq (h) at 50' (dBA)	Receiver Elevation (feet)	Source Elevation (feet)	Source to Receiver (feet)	Source to Barrier (feet)	Receiver to Barrier (feet)	Barrier (base) (feet)	Barrier Height (feet)	Fresnel No. at 500 Hz	Barrier Attenuation (dBA)	Leq w/o Barrier (dBA)	Leq w/Barrier (dBA)
NE1	1354	633	45	1601	633	Carrier Weathermaker	63	5	48.0	247	20	227	42	6.0	0.29	9	49	40
																TOTAL LEQ:	49	40
																	Without Barrier	With Barrier/ Parapet

Site	X	Y	Elev. At Roof or Ground	Source Height	Lp Single Source	Number of Units	Sound Level at 50 feet Total	Equip. Location Site / Number		Frequency (in Hz)	500
NE1	1354	633	42	3	94.5	1	63	NE1	Carrier Weathermaker		

Receivers at P.L.				Building Elevation	Roof Elevation
				0	35
S1	1354	244	0		
E1	1601	633	0		

RAY-TRACE PROGRAM (FOR A POINT-SOURCE)

Uses the Equation: $(A_{e4})_{point}=20*\log[(2*pi*N)^{1/2}/\tanh(2*pi*N)^{1/2}]+5dB$
(Ref. Pg.174, Noise and Vibration Control, L.L. Beranek Editor, 1971 Ed.

Project: KL Fenix Warehouse Project
Date: 10/03/19
By: MG

Please Enter: Using English (E) units or Metric (M) units ? **E**

Ray Trace Number/Description	Source-Receiver Distance (ft. or m)	Source Base Elev. (ft. or m)	Source Height above Ground (ft. or m)	Receiver Base Elev. (ft. or m)	Receiver Height above Ground (ft. or m)	Horizontal Barrier Dist. (in ref. to source) (ft. or m)	Barrier Base Elev. (ft. or m)	Barrier Height (ft. or m)	Dominant Freq.(Hz)	Source-Rcvr Straight-Line Dist. (ft. or m)	Source-Top-of-Barrier Dist. (ft. or m)	Receiver-Top-of-Barrier Dist. (ft. or m)	Lambda	N_{max}	$AE_{(barriers)}$ (dB)
1. Source -Truck Noise	410.0	0.0	10.0	0.0	5.0	70.0	0.0	**42.0**	500.0	410.0	77.0	342.0	2.3	7.9	**22.0**
1. Source -Truck Noise	360.0	0.0	10.0	0.0	5.0	20.0	0.0	**42.0**	500.0	360.0	37.7	342.0	2.3	17.5	**25.4**

Product Data

WeatherMaker®
Packaged Rooftop Units

20 to 60 Nominal Tons



48/50A020-060
Single-Package Gas Heating/Electric Cooling
Rooftop Units and Electric Cooling
Rooftop Units with Optional Electric Heat with *Comfort*Link Controls
and Puron® Refrigerant (R-410A)

© Carrier Corporation 2019

Features/Benefits

Carrier's 48/50A commercial packaged unit offers design flexibility, quality, reliability, and *Comfort*Link controls.

Carrier's 48/50A Series commercial packaged rooftops offer:

- Non-ozone depleting Puron refrigerant (R-410A)
- Novation® heat exchanger technology with microchannel coil
- An easy-to-use, plain English language display on the *Comfort*Link controls
- Ratings that meet ASHRAE (American Society of Heating, Refrigerating, and Air-Conditioning Engineers) Standard 90.1-2016 and IECC (International Energy Conservation Code) IECC-2015 minimum energy efficiency requirements when equipped with the SAV™ (staged air volume) option
- Meets ASHRAE Standard 62
- Constant, staged, or variable air volume
- Communicating controls
- Accurately match building loads with up to 5 steps of capacity
- Variable capacity compressor option
- Humidi-MiZer® adaptive dehumidification option
- Variable frequency drive on all variable air volume and SAV™ units
- Mechanical cooling operation at outdoor ambient temperatures as low as 32°F (–20°F with optional low ambient control)

Design flexibility

Dedicated vertical supply/return units (A2, A3, A6, A7) are ideal for new construction or retrofit to existing installations. The low unit profile is maintained when the unit is installed on the accessory roof curb.

The ducts are attached directly to the roof curb to allow all ductwork to be completed before the unit is positioned.

Dedicated horizontal units (A4, A5, A8, A9) are ideal for replacement or applications such as through-the-wall where sound must be attenuated before the duct penetrates the roof. Ducts connect directly to the unit. Horizontal units may be curb or slab mounted.

The unit cabinet may be provided with optional double wall construction for indoor air quality sensitive applications.

*Comfort*Link controls

Factory-installed *Comfort*Link controls provide the capability for free-standing operation or may be linked with a more extensive system. Factory-installed and programmed BACnet[1] communication capability provides simple integration with the building HVAC system (e.g., terminal devices), an i-Vu® Open Control System, or a BACnet building automation system. The *Comfort*Link controls also have the capability to communicate with the Carrier Comfort Network® (CCN) system. This communication flexibility allows simple system integration, as well as data collection, trending, monitoring, and alarm displays.

The 48/50A Series may also be configured to communicate via Modbus[2] or LonWorks[3] protocols, if required by the application.

The *Comfort*Link controls are your link to a world of simple and easy-to-use rooftop units that offer outstanding performance and value. When used with a space temperature sensor, the *Comfort*Link controls maintain control over the economizer and condenser fans and help optimize the performance of the multiple refrigeration circuits as conditions change, resulting in the following features:

- higher part load efficiency
- better control of temperature and humidity
- superior reliability
- redundant refrigeration systems
- high ambient cooling operation at 115°F
- low ambient cooling operation at 32°F as standard (optional Greenspeed® control for operation down to –20°F)

The *Comfort*Link scrolling marquee display is very easy to use. Messages are displayed in easy to understand English. No decoding is required. A scrolling readout provides detailed explanations of control information. Only 4, large, easy-to-use buttons are required to maneuver through the entire menu. The readout is designed

1. BACnet is a registered trademark of ASHRAE (American Society of Heating, Refrigerating, and Air-Conditioning Engineers).
2. Modbus is a registered trademark of Schneider Electric.
3. LonWorks is a registered trademark of Echelon Corporation.

Table of contents

	Page
Features/Benefits	2
Model Number Nomenclature	6
Ratings and Capacities	8
Physical Data	11
Options and Accessories	19
Base Unit Dimensions	21
Accessory Dimensions	39
Selection Procedure	44
Performance Data	45
Controls	84
Application Data	98
Typical Wiring Schematics	100
Guide Specifications	108

to be visible even in the brightest sunlight. A hand-held Navigator™ accessory can be used for added service flexibility.

The *Comfort*Link controls provide unparalleled service diagnostic information. Temperature and pressure can be read from the display with no need for separate gages. Other data, such as compressor cycles, unit run time hours, and current alarms can also be accessed. A history of alarms is also available for viewing.

A service run test can be very helpful when troubleshooting. The user can run test major components to help determine the root cause of a problem. The unit can be run-tested before an installation is complete to support a satisfactory start-up.

To further support reliability, the *Comfort*Link controls prevent reverse compressor rotation.

No laptop computers are required for start-up. Time schedules are built in and the scrolling marquee display provides easy access to set points.

The ComfortLink controller accepts input from a CO_2 sensor and a smoke detector. Both are available as factory-installed options or as field-installed accessories.

The unit-mounted terminal strip allows control of the unit with a standard thermostat. Expensive interface devices are not required.

Environmentally balanced

Making an environmentally responsible decision is possible when using Carrier's Puron® refrigerant (R-410A). Puron refrigerant (R-410A) is an HFC refrigerant that does not contain chlorine that is damaging to the ozone layer. This refrigerant is a safe, efficient, and environmentally balanced refrigerant.

Quality and reliability

Excellent full and part load efficiencies are achieved by using multiple scroll compressors and indoor coils with intertwined dual refrigerant circuits. The compressors are equipped with crankcase heaters and protected by electronic sensors and logic to control minimum on and off times and reverse rotation. The refrigerant circuits are both electrically and mechanically independent, to provide standby capability, should one circuit require service.

Totally enclosed outdoor-fan motors are designed for many years of trouble-free operation.

Positive-locking bearings for the indoor fan reduce vibration of the supply fan assembly and remain locked during the life of the bearing.

Unit capacity control

The units have up to 5 stages of capacity control to match the load requirements of the conditioned space. Unit operation will closely match the load and maintain comfort in the most energy-efficient manner.

Variable capacity scroll compressor

In air conditioning applications, the load may vary significantly, requiring a means to vary the system capacity for optimal performance and control.

The A Series large rooftop units with optional variable capacity scroll compression provide a highly efficient means of capacity control using scroll compressors. The digital compressor technology provides smooth, vibration-free operation by axially unloading the compliant scrolls.

By varying the amount of time that the scrolls are unloaded, the A Series unit is able to precisely match the system capacity to the space load. This feature can reduce energy consumption, provide better dehumidification, reduce compressor cycling, and improve comfort in the space.

Humidi-MiZer® adaptive dehumidification system

Carrier's Humidi-MiZer adaptive dehumidification system is an all-inclusive factory-installed option that can be ordered with WeatherMaker® 48/50A rooftop unit. This system expands the envelope of operation of the A Series rooftop to provide unprecedented flexibility that will meet year-round comfort conditions.

The Humidi-MiZer adaptive dehumidification system has the industry's only dual dehumidification mode setting. The WeatherMaker rooftop, coupled with the Humidi-MiZer adaptive dehumidification system, is capable of modulating between normal design cooling mode, subcooling mode, and hot gas reheat mode.

Normal design cooling mode will operate under the normal sequence of operation. Subcooling mode will operate to satisfy part load type conditions. Hot Gas Reheat mode will operate when outdoor temperatures diminish and the need for latent capacity is required for sole humidity control. Hot Gas Reheat mode will provide neutral air for maximum dehumidification operation.

The WeatherMaker A Series generation version of Carrier's Humidi-MiZer system includes refrigerant modulating valves that provide variable flow bypass around the condenser. This innovative feature ensures exact control of the supply-air temperature as the unit lowers the evaporator temperature to increase latent capacity.

Additionally, when the space requires dehumidification only, the Humidi-MiZer system can increase hot discharge gas bypass to the Humidi-MiZer coil in order to heat the air to the exact neutral state required—no overcooling or overheating with latent capacity similar to that provided in the full subcooling mode.

Variable frequency drive (VFD)

Variable air volume (VAV) units use state of the art variable frequency drive (VFD) to control duct static pressure for optimum supply fan energy savings.

VAV features include:

- control of cooling and heating (if equipped with heat) in both occupied and unoccupied mode
- support of optional space temperature sensor
- control of modulating economizer to provide free cooling when outdoor conditions are suitable
- support of IAQ (indoor air quality) sensor
- support linkage to ComfortID™ VAV systems

Staged air volume units use the VFD to allow for a configurable high and low fan speed. In this way, during times of part load or low demand, indoor fan motor power consumption can be reduced.

Greenspeed® Intelligence provides low ambient temperature head pressure control that permits operation of the 48/50A units to –20°F (–29°C) outdoor ambient temperature. The option offers increased efficiency and low outdoor acoustic performance. It features a quiet AeroAcoustic™ fan system, compressor sound blankets, and VFD driven condenser fan motors.

Features/Benefits (cont)

Factory-installed economizer

An optional integrated economizer permits cooling by using an outdoor air sensor. The economizer uses ultra-low leak blades for tight sealing and a robust drive design for long life.

The economizer operates in conjunction with mechanical cooling, when required, and is factory installed for either vertical or horizontal operation. The factory-supplied and field-installed rain hood/filter assembly is designed to prevent moisture or objects from entering the unit.

Exhaust air relief is available for all units:

- barometric relief (CV [constant volume] or VAV)
- power exhaust
- modulating power exhaust
- high capacity power exhaust

Field-adjustable set points on modulating power exhaust prevent space pressurization problems. Factory-installed relief options are unit mounted on downflow units. Accessories must be duct mounted for horizontal applications.

Novation® heat exchanger technology

The Novation heat exchanger design with microchannel condenser coil is a robust, cost-effective alternative to traditional coil design for standard applications. Microchannel coils are also sturdier than other coil types, making them easier to clean without causing damage to the coil.

Due to the compact, all-aluminum design, microchannel coils reduce overall unit operating weight. The streamlined microchannel coil also reduces refrigerant charge by up to 40%.

Microchannel coils are not recommended by Carrier for marine, coastal, or industrial environments, unless Carrier-approved coating is applied.

Gas heating units

Integrated gas unit controller (IGC) (gas heating units only)

All ignition components are contained in the compact IGC, which is easily accessible for servicing. The IGC control board, designed and manufactured exclusively for Carrier rooftop units, provides built-in diagnostic capability. An LED (light-emitting diode) simplifies troubleshooting by providing visual fault notification and system status confirmation.

The IGC also contains an anti-cycle protection for gas heat operation. After 4 continuous cycles on the unit high-temperature limit switch, the gas heat operation is disabled and an error code is issued. This feature greatly improves reliability of the rooftop unit.

The IGC also contains burner control logic for accurate and dependable gas ignition. This LED fault-notification system reduces service person troubleshooting time and minimizes service costs. The IGC can also increase heating efficiency by controlling evaporator fan on and off delays.

Efficient, dependable operation

Tubular, dimpled gas heat exchangers optimize heat transfer for improved efficiency. The tubular design permits hot gases to make multiple passes across the path of the supply air. The dimpled design creates a turbulent gas flow to increase heating efficiency. The extra thick Alumagard™ heat exchanger coating provides corrosion resistance to lengthen coil life. An optional stainless steel heat exchanger is also available.

The unsightly appearance of flue stacks is eliminated and the effects of wind on heating operations are diminished by the induced draft combustion system. The inducer fan draws hot combustion gas through the heat exchanger at the optimum rate for the most effective heat transfer. Induced draft heating systems are safer than positive pressure, forced draft heating systems. With the induced draft heating system, the heat exchanger operates under negative pressure, preventing flue gas leakage into the indoor supply air.

During the heating mode, the evaporator-fan relay automatically starts the evaporator fan after the heat exchanger warms up to a suitable temperature. To increase efficiency and comfort, the 30-second fan delay prevents cold air from entering the supply duct system when the conditioned space is calling for heat.

The direct-spark ignition system saves operating expense when compared to pilot ignition systems. No crossover tube is required; therefore, no sooting or pilot-fouling problems can occur.

All 48A standard units are designed for natural gas. An accessory LP (liquid propane) conversion kit is available.

Safety is built in

All 48A units have a flame rectification sensor to quickly sense the burner flame and ignite burners almost immediately. The controls are designed to shut down the unit during any flame outage or circuit failure. The flame sensor reacts quickly to these events. In the event of a shutdown, an error code is issued at the IGC board.

The heating safety controls will shut down the unit if they detect a problem. If excessive temperatures develop, limit switches shut off the gas valve. After 4 continuous short cycles of the high-temperature limit switch, the IGC board locks out the gas heat cycle to prevent any further short cycles. The rollout switch also de-energizes the gas valve in the event of a flame rollout.

Support of fire and smoke control is included with an optional *Comfort*Link controls expansion module (CEM).

Staged gas unit heating

The staged gas control option adds the capability to control the rooftop unit's gas heating system to a specified supply air temperature set point for purposes of tempering a cool mixed-air condition, or for reheat when the mechanical cooling is being used for dehumidification. The gas heating system employs multiple heating sections. Each section is equipped with a two-stage gas valve. The gas valves are sequenced by a factory-installed staged gas controller (SGC), as required, to maintain the user-specified supply air set point. Up to 11 stages of heating control are available, based on quantity and heating capacity sizes of the individual heat exchanger sections provided in the base unit. In addition to providing system control for tempering and reheat operation, the SGC also provides Demand Heating control for the first stage (W1 or low-heat) heating mode. The heating capacity will always go to 100% for second stage (W2 or high-heat) operation.

Tempering supply air is desirable when rooftop units are operating in ventilation mode (economizer only operation) at low outdoor temperatures. At low outdoor temperatures, the mixed-air temperature (combination of return-

from-space temperature and outdoor/ventilation air temperature) may become too low for the comfort of the occupants or for the terminal reheat systems. The tempering function adds incremental steps of heat capacity to raise the temperature of the mixed air up to levels suitable for direct admission into the occupied space or to levels consistent with reheat capabilities of the space terminals.

Installation/serviceability

Dedicated design (vertical or horizontal) requires no alteration time to convert in the field. Single point electrical connections are standard on all units. Electrical service access can be made through roof curb or side of unit.

All units are equipped with the ComfortLink control system as standard. The ComfortLink control system has a fully alphanumeric display and keypad. The display has expandable text messages that eliminate the need to look up coded display information. The unit also supports use of the enhanced multiple line display that can be connected through a phone jack connection at either end of the unit. The standard microprocessor controls replace the need for field-installed anti-short cycle timers. The controls are compatible with either a room sensor or conventional thermostat with no need to install an accessory interface. In addition, no special tools are required to run the unit through its operational steps. The unit can be run-tested before an installation is complete to ensure satisfactory start-up.

Hinged access panels are located for easy access to standard serviceable components for maintenance.

No fasteners need to be removed, which reduces servicing time and helps prevent roof leaks caused by discarded screws. Color-coded wiring permits easy tracing and diagnostics.

Model number nomenclature

48A UNITS

48 A2 D 050 F E G 6 4 1 GN

48 – Cooling Unit with Gas Heat

Configuration
A2 – CV/SAV Vertical
A3 – VAV Vertical
A4 – CV/SAV Horizontal
A5 – VAV Horizontal
A6 – CV/SAV Vertical with Greenspeed Intelligence
A7 – VAV Vertical with Greenspeed Intelligence
A8 – CV/SAV Horizontal with Greenspeed Intelligence
A9 – VAV Horizontal with Greenspeed Intelligence

Heat Options
D – Low Gas Heat
E – High Gas Heat
F – Low Gas Heat with Humidi-MiZer
G – High Gas Heat with Humidi-MiZer
M – Low Gas Heat Stainless
N – High Gas Heat Stainless
S – Staged Low Gas Heat Stainless
T – Staged High Gas Heat Stainless
V – Staged Low Gas Heat Stainless with Humidi-MiZer
W – Staged High Gas Heat Stainless with Humidi-MiZer

Unit Size - Nominal Tons
020 – 20
025 – 25
027 – 27
030 – 30
035 – 35
040 – 40
050 – 50
060 – 60

Control Options
– – No Features
A – Controls Expansion Module with Phase Monitor
B – CO_2 Sensor
C – Smoke Detector
D – CO_2 Sensor and Smoke Detector
E – Plugged Filter Indicator and Lube Lines
F – Plugged Filter Indicator, Lube Lines and CO_2 Sensor
G – Plugged Filter Indicator, Lube Lines and Smoke Detector
H – Plugged Filter Indicator, Lube Lines, CO_2 Sensor and Smoke Detector
J – CO_2 Sensor with Controls Expansion Module and Phase Monitor
K – Smoke Detector with Controls Expansion Module and Phase Monitor
L – CO_2 Sensor and Smoke Detector with Controls Expansion Module and Phase Monitor
M – Plugged Filter Indicator and Lube Lines with Controls Expansion Module and Phase Monitor
N – Plugged Filter Indicator, Lube Lines and CO_2 Sensor with Controls Expansion Module and Phase Monitor
P – Plugged Filter Indicator, Lube Lines and Smoke Detector with Controls Expansion Module and Phase Monitor
Q – Plugged Filter Indicator, Lube Lines, CO_2 Sensor and Smoke Detector with Controls Expansion Module and Phase Monitor

Factory-Installed Options
Refer to price pages for available option codes.

Packaging/Communication
1 – Domestic
3 – Export
A – Domestic with BACnet Communication Option
C – Export with BACnet Communication Option

Design Series
4 – A Series

Voltage
1 – 575-3-60
5 – 208/230-3-60
6 – 460-3-60

Coil Options
– – Al/Cu Cond, Al/Cu Evap
A – Al/Cu Cond, Al/Cu Evap with Digital Compressor
B – Cu/Cu Cond, Al/Cu Evap with Digital Compressor
C – Cu/Cu Cond, Al/Cu Evap
D – Al/Cu Cond Precoat, Al/Cu Evap with Digital Compressor
E – Al/Cu Cond Precoat, Al/Cu Evap
F – E-coated Al/Cu, Al/Cu Evap
G – MCHX Cond, Al/Cu Evap
H – E-coated MCHX Cond, Al/Cu Evap
J – MCHX Cond with Coil Grilles, Al/Cu Evap
K – E-coated MCHX Cond with Coil Grilles, Al/Cu Evap
L – E-coated Al/Cu Cond, Al/Cu Evap with Digital Compressor
M – MCHX Cond, Al/Cu Evap with Digital Compressor
N – E-coated MCHX Cond, Al/Cu Evap with Digital Compressor
P – MCHX Cond with Coil Grilles, Al/Cu Evap with Digital Compressor
Q – Al/Cu Cond, Al/Cu Evap with Hot Gas Bypass
R – Cu/Cu Cond, Al/Cu Evap with Hot Gas Bypass
S – Al/Cu Cond Precoat, Al/Cu Evap with Hot Gas Bypass
T – E-coated Al/Cu, Al/Cu Evap with Hot Gas Bypass
V – MCHX Cond, Al/Cu Evap with Hot Gas Bypass (No Humidimizer)
W – E-coated MCHX Cond, Al/Cu Evap with Hot Gas Bypass (No Humidimizer)
X – MCHX Cond with Coil Grilles, Al/Cu Evap with Hot Gas Bypass (No Humidimizer)
Y – E-coated MCHX Cond with Coil Grilles, Al/Cu Evap with Hot Gas Bypass (No Humidimizer)
Z – E-coated MCHX Cond with Coil Grilles, Al/Cu Evap with Digital Compressor
2 – E-coated Al/Cu Cond, Al/Cu E-Coat Evap
3 – E-coated MCHX Cond, Al/Cu E-Coat Evap
4 – E-coated MCHX Cond with Coil Grilles, Al/Cu E-Coat Evap
5 – E-coated Al/Cu Cond, Al/Cu E-Coat Evap with Digital Compressor
6 – E-coated MCHX Cond, Al/Cu E-Coat Evap with Digital Compressor
7 – E-coated MCHX Cond with Coil Grilles, Al/Cu E-Coat Evap with Digital Compressor

Motor Options

No VFD	VFDB	VFD
A – 5 HP	**J** – 5 HP	**L** – 5 HP
C – 10 HP	**1** – 10 HP	**N** – 10 HP
D – 15 HP	**2** – 15 HP	**P** – 15 HP
E – 20 HP	**3** – 20 HP	**Q** – 20 HP
F – 25 HP	**4** – 25 HP	**R** – 25 HP
G – 30 HP	**5** – 30 HP	**S** – 30 HP
H – 40 HP	**6** – 40 HP	**T** – 40 HP

LEGEND

Al — Aluminum
Cu — Copper
CV — Constant Volume
MCHX — Microchannel Heat Exchanger
SAV — Staged Air Volume
VAV — Variable Air Volume
VFDB — Variable Frequency Drive Bypass

NOTES:
1. VAV and SAV models are equipped with a supply fan motor variable frequency drive (VFD).
2. All indoor fan motors meet the minimum efficiency requirements as established by the Energy Independence and Security Act (EISA) 2007.

Quality Assurance

ISO 9001:2008-certified processes

ASHRAE 90.1 COMPLIANT

50A UNITS

50 A2 E 050 F E G 6 4 1 GN

50 – Cooling Unit

Configuration
A2 – CV/SAV Vertical
A3 – VAV Vertical
A4 – CV/SAV Horizontal
A5 – VAV Horizontal
A6 – CV/SAV Vertical with Greenspeed Intelligence
A7 – VAV Vertical with Greenspeed Intelligence
A8 – CV/SAV Horizontal with Greenspeed Intelligence
A9 – VAV Horizontal with Greenspeed Intelligence

Heat Options
- – No heat
B – 36/27 kW
C – 72/54 kW
D – 54/42 kW
E – 108/81 kW
F – No heat with Humidi-MiZer
G – 36/27 kW with Humidi-MiZer
H – 72/54 kW with Humidi-MiZer
J – 54/42 kW with Humidi-MiZer
K – 108/81 kW with Humidi-MiZer

Unit Size - Nominal Tons
020 – 20
025 – 25
027 – 27
030 – 30
035 – 35
040 – 40
050 – 50
060 – 60

Control Options
– – No Features
A – Controls Expansion Module with Phase Monitor
B – CO_2 Sensor without Controls Expansion Module
C – Smoke Detector
D – CO_2 Sensor and Smoke Detector
E – Plugged Filter Indicator and Lube Lines
F – Plugged Filter Indicator, Lube Lines and CO_2 Sensor
G – Plugged Filter Indicator, Lube Lines and Smoke Detector
H – Plugged Filter Indicator, Lube Lines, CO_2 Sensor and Smoke Detector
J – CO_2 Sensor with Controls Expansion Module and Phase Monitor
K – Smoke Detector with Controls Expansion Module and Phase Monitor
L – CO_2 Sensor and Smoke Detector with Controls Expansion Module and Phase Monitor
M – Plugged Filter Indicator and Lube Lines with Controls Expansion Module and Phase Monitor
N – Plugged Filter Indicator, Lube Lines and CO_2 Sensor with Controls Expansion Module and Phase Monitor
P – Plugged Filter Indicator, Lube Lines and Smoke Detector with Controls Expansion Module and Phase Monitor
Q – Plugged Filter Indicator, Lube Lines, CO_2 Sensor and Smoke Detector with Controls Expansion Module and Phase Monitor

Factory-Installed Options
Refer to price pages for available option codes.

Packaging/Communication
1 – Domestic
3 – Export
A – Domestic with BACnet Communication Option
C – Export with BACnet Communication Option

Design Series
4 – A Series

Voltage
1 – 575-3-60
2 – 380-3-60
5 – 208/230-3-60
6 – 460-3-60

Coil Options
– – Al/Cu Cond, Al/Cu Evap
A – Al/Cu Cond, Al/Cu Evap with Digital Compressor
B – Cu/Cu Cond, Al/Cu Evap with Digital Compressor
C – Cu/Cu Cond, Al/Cu Evap
D – Al/Cu Cond Precoat, Al/Cu Evap with Digital Compressor
E – Al/Cu Cond Precoat, Al/Cu Evap
F – E-coated Al/Cu, Al/Cu Evap
G – MCHX Cond, Al/Cu Evap
H – E-coated MCHX Cond, Al/Cu Evap
J – MCHX Cond with Coil Grilles, Al/Cu Evap
K – E-coated MCHX Cond with Coil Grilles, Al/Cu Evap
L – E-coated Al/Cu Cond, Al/Cu Evap with Digital Compressor
M – MCHX Cond, Al/Cu Evap with Digital Compressor
N – E-coated MCHX Cond, Al/Cu Evap with Digital Compressor
P – MCHX Cond with Coil Grilles, Al/Cu Evap with Digital Compressor
Q – Al/Cu Cond, Al/Cu Evap with Hot Gas Bypass
R – Cu/Cu Cond, Al/Cu Evap with Hot Gas Bypass
S – Al/Cu Cond Precoat, Al/Cu Evap with Hot Gas Bypass
T – E-coated Al/Cu, Al/Cu Evap with Hot Gas Bypass
V – MCHX Cond, Al/Cu Evap with Hot Gas Bypass (No Humidimizer)
W – E-coated MCHX Cond, Al/Cu Evap with Hot Gas Bypass (No Humidimizer)
X – MCHX Cond with Coil Grilles, Al/Cu Evap with Hot Gas Bypass (No Humidimizer)
Y – E-coated MCHX Cond with Coil Grilles, Al/Cu Evap with Hot Gas Bypass (No Humidimizer)
Z – E-coated MCHX Cond with Coil Grilles, Al/Cu Evap with Digital Compressor
2 – E-coated Al/Cu Cond, Al/Cu E-Coat Evap
3 – E-coated MCHX Cond, Al/Cu E-Coat Evap
4 – E-coated MCHX Cond with Coil Grilles, Al/Cu E-Coat Evap
5 – E-coated Al/Cu Cond, Al/Cu E-Coat Evap with Digital Compressor
6 – E-coated MCHX Cond, Al/Cu E-Coat Evap with Digital Compressor
7 – E-coated MCHX Cond with Coil Grilles, Al/Cu E-Coat Evap with Digital Compressor

Motor Options

No VFD	VFDB	VFD
A – 5 HP	**J** – 5 HP	**L** – 5 HP
C – 10 HP	**1** – 10 HP	**N** – 10 HP
D – 15 HP	**2** – 15 HP	**P** – 15 HP
E – 20 HP	**3** – 20 HP	**Q** – 20 HP
F – 25 HP	**4** – 25 HP	**R** – 25 HP
G – 30 HP	**5** – 30 HP	**S** – 30 HP
H – 40 HP	**6** – 40 HP	**T** – 40 HP

LEGEND

Al — Aluminum
Cu — Copper
CV — Constant Volume
MCHX — Microchannel Heat Exchanger
SAV — Staged Air Volume
VAV — Variable Air Volume
VFDB — Variable Frequency Drive Bypass

NOTES:
1. VAV and SAV models are equipped with a supply fan motor variable frequency drive (VFD).
2. All indoor fan motors meet the minimum efficiency requirements as established by the Energy Independence and Security Act (EISA) 2007.

Quality Assurance

ISO 9001:2008-certified processes

ASHRAE 90.1 COMPLIANT

Ratings and capacities

ELECTRIC RESISTANCE HEATER DATA

UNIT 50A	HEATER kW Unit Voltages				HEATER STAGES	% HEAT PER STAGE	DESIGN RANGE	
	208	230	460	575			Min CFM	Max CFM
020-035 LO HEAT	27	36	36	36	1	100	6,000	15,000
020-035 HIGH HEAT	54	72	72	72	2	50/100	6,000	15,000
040,050 LO HEAT	27	36	36	36	1	100	10,500	20,000
040,050 HIGH HEAT	54	72	72	72	2	50/100	10,500	20,000
060 LO HEAT	41	54	54	54	1	100	15,000	27,000
060 HIGH HEAT	81	108	108	108	2	50/100	15,000	27,000

NOTE: Due to the open design of the electric heaters, the airside pressure drop is negligible.

COOLING CFM OPERATING RANGE

UNIT	MIN CFM	MAX CFM*
48/50A2,A4,A6,A8020	6,000	10,000
48/50A3,A5,A7,A9020	4,000†	10,000
48/50A2,A4,A6,A8025	7,000	12,500
48/50A3,A5,A7,A9025	5,000†	12,500
48/50A2,A4,A6,A8027	8,100	13,500
48/50A3,A5,A7,A9027	5,400†	13,500
48/50A2,A4,A6,A8030	9,000	15,000
48/50A3,A5,A7,A9030	6,000†	15,000
48/50A2,A4,A6,A8035	10,500	17,500
48/50A3,A5,A7,A9035	7,000†	17,500
48/50A2,A4,A6,A8040	12,000	20,000
48/50A3,A5,A7,A9040	8,000†	20,000
48/50A2,A4,A6,A8050	13,500	20,000
48/50A3,A5,A7,A9050	10,000†	20,000
48/50A2,A4,A6,A8060	18,000	27,000
48/50A3,A5,A7,A9060	12,000†	27,000

* Operation at these levels may be limited by entering evaporator air wet bulb temperatures. See Cooling Capacities tables on pages 46-69 for further details.

† Variable air volume units will operate down to 70 cfm/ton. Performance at 70 cfm/ton is limited to unloaded operation and may be additionally limited by edb and ewb conditions or Humidi-MiZer system operation.

GAS HEATING CAPACITIES AND EFFICIENCIES

STANDARD UNITS

UNITS 48A	INPUT (Btuh)		MAXIMUM OUTPUT (Btuh)	TEMPERATURE RISE (F)	STEADY-STATE EFFICIENCY (%)	DESIGN RANGE	
	Stage 1	Stage 2				Min Cfm	Max Cfm*
020-030 LO HEAT	262,500	350,000	283,500	15 to 45	81	5,900	15,000
020-030 HIGH HEAT	394,000	525,000	425,250	35 to 65	81	6,100	11,400
035 LO HEAT	262,500	350,000	283,500	15 to 45	81	5,900	15,000
035 HIGH HEAT	600,000	800,000	648,500	30 to 60	81	10,100	20,200
040,050 LO HEAT	300,000	400,000	324,000	10 to 40	81	7,600	22,500
040,050 HIGH HEAT	600,000	800,000	648,000	30 to 60	81	10,100	20,200
060 LO HEAT	582,000	776,000	628,560	10 to 40	81	11,000	27,000
060 HIGH HEAT	873,000	1,164,000	931,200	30 to 60	80	14,550	27,000

UNITS WITH STAGED GAS OPTION

UNITS 48A	STAGES OF GAS CONTROL (% of Full Heat Output)	MIN. OUTPUT (Btuh)	MAX. OUTPUT (Btuh)	DESIGN RANGE	
				Min Cfm	Max Cfm*
020-030 LO HEAT	38, 50, 75, 88, 100	107,730	283,500	5,900	15,000
020-030 HIGH HEAT	25, 33, 50, 67, 75, 83, 100	106,313	425,250	6,100	11,400
035 LO HEAT	38, 50, 75, 88, 100	107,730	283,500	5,900	15,000
035 HIGH HEAT	38, 50, 75, 88, 100	246,240	648,000	10,100	20,200
040,050 LO HEAT	38, 50, 75, 88, 100	123,120	324,000	7,600	22,500
040,050 HIGH HEAT	38, 50, 75, 88, 100	246,240	648,000	10,100	20,200
060 LO HEAT	19, 25, 38, 44, 50, 56, 63, 75, 88, 94, 100	119,426	628,560	11,000	27,000
060 HIGH HEAT	25, 33, 50, 58, 67, 75, 83, 92, 100	232,800	931,200	14,550	27,000

* In some cases, maximum cfm may be limited by maximum cooling airflow value.

NOTES:

1. Ratings are approved for altitudes to 2000 feet. At altitudes over 2000 ft, ratings are 4% less for each 1000 ft greater than 2000 ft above sea level.
2. At altitudes up to 2000 ft, the following formula may be used to calculate air temperature rise:

$$\Delta t = \frac{\text{Output capacity}}{1.10 \times \text{air quantity}}$$

3. At altitudes above 2000 ft, the following formula may be used:

$$\Delta t = \frac{\text{Output capacity}}{(.24 \times \text{specific weight of air} \times 60)\ (\text{air quantity})}$$

4. On standard gas heat with aluminized heat exchangers, the minimum allowable mixed air entering the heat exchanger during half-rate (first stage) operation is 50°F. There is no minimum limitation for full-rate operation.
5. Total unit design is listed by ETL Testing Laboratories Inc.

c ETL us
Intertek

CAPACITY CONTROL STAGING OPTIONS

APPLICATION	UNIT	DEMAND SOURCE	COOLING CONTROL METHOD	COMPRESSOR SEQUENCE					
				SIZE 020-027 UNITS			SIZE 030-060 UNITS		
				WITHOUT HOT GAS BYPASS	WITH HOT GAS BYPASS	WITH VARIABLE CAPACITY COMPRESSOR	WITHOUT HOT GAS BYPASS	WITH HOT GAS BYPASS	WITH VARIABLE CAPACITY COMPRESSOR
VAV	48/50A3,A5, A7,A9	RAT	Multiple Stage EDT	Table A	Table B	Table C	Table D	Table E	Table F
		SPT	Multiple Stage EDT	Table A	Table B	Table C	Table D	Table E	Table F
SAV/CV Sensor	48/50A2,A4, A6,A8	SPT	Multiple Adaptive Demand	Table A	Table B	Table C	Table D	Table E	Table F
SAV/CV, Mech Thermostat		Y1,Y2	Multiple Adaptive Demand	Table A	Table B	Table C	Table D	Table E	Table F

LEGEND

CV — Constant Volume
EDT — Evaporator Discharge Temperature
RAT — Return Air Temperature
SAV — Staged Air Volume
SPT — Space Temperature
VAV — Variable Air Volume

CAPACITY CONTROL STAGING OPTIONS TABLE A

48/50A020-027 UNITS VAV AND ADAPTIVE CV/SAV STAGING SEQUENCE WITHOUT HOT GAS BYPASS

STAGE	SEQUENCE 1				SEQUENCE 2			
	0	1	2	3	0	1	2	3
COMP	Compressor Status				Compressor Status			
A1	OFF	ON	OFF	ON	OFF	OFF	ON	ON
A2	OFF	OFF	ON	ON	OFF	ON	OFF	ON
B1	OFF	OFF	ON	ON	OFF	OFF	ON	ON
UNIT	Capacity 48/50A				Capacity 48/50A			
020	0%	30%	70%	100%	0%	30%	70%	100%
025	0%	33%	67%	100%	0%	33%	67%	100%
027	0%	33%	67%	100%	0%	33%	67%	100%

CAPACITY CONTROL STAGING OPTIONS TABLE B

48/50A020-027 UNIT VAV AND ADAPTIVE CV STAGING SEQUENCE WITH HOT GAS BYPASS

STAGE	SEQUENCE 1					SEQUENCE 2				
	0	1	2	3	4	0	1	2	3	4
COMP	Compressor Status					Compressor Status				
A1	OFF	ON*	ON	OFF	ON	OFF	OFF	OFF	ON	ON
A2	OFF	OFF	OFF	ON	ON	OFF	ON*	ON	OFF	ON
B1	OFF	OFF	OFF	ON	ON	OFF	OFF	OFF	ON	ON
UNIT	Capacity 48/50A					Capacity 48/50A				
020	0%	10%	30%	70%	100%	0%	10%	30%	70%	100%
025	0%	17%	33%	67%	100%	0%	17%	33%	67%	100%
027	0%	17%	33%	67%	100%	0%	17%	33%	67%	100%

*Hot gas bypass activated.

CAPACITY CONTROL STAGING OPTIONS TABLE C

48/50A020-027 UNITS VAV AND ADAPTIVE CV/SAV STAGING SEQUENCE WITH VARIABLE CAPACITY COMPRESSOR

	STAGE			
	0	1	2	3
COMP	Compressor Status			
A1	OFF	OFF	ON	ON
A2	OFF	OFF	OFF	ON
B1*	OFF	ON	ON	ON
UNIT	Capacity 48/50A			
020	0%	20% to 40%	50% to 70%	80% to 100%
025	0%	17% to 33%	50% to 66%	83% to 100%
027	0%	17% to 33%	50% to 66%	83% to 100%

*On units with optional digital scroll compressor, compressor B1 modulates from minimum to maximum capacity to provide increased stages.

Ratings and capacities (cont)

CAPACITY CONTROL STAGING OPTIONS TABLE D

48/50A030-060 UNITS VAV AND ADAPTIVE CV/SAV STAGING SEQUENCE WITHOUT HOT GAS BYPASS

STAGE	SEQUENCE 1					SEQUENCE 2				
	0	1	2	3	4	0	1	2	3	4
COMP	Compressor Status					Compressor Status				
A1	OFF	ON	OFF	OFF	ON	OFF	OFF	ON	ON	ON
A2	OFF	OFF	ON	ON	ON	OFF	ON	OFF	ON	ON
B1	OFF	OFF	ON	ON	ON	OFF	OFF	ON	ON	ON
B2	OFF	OFF	OFF	ON	ON	OFF	OFF	OFF	OFF	ON
UNIT	Capacity 48/50A					Capacity 48/50A				
030	0%	25%	50%	75%	100%	0%	25%	50%	75%	100%
035	0%	20%	50%	80%	100%	0%	20%	50%	70%	100%
040	0%	25%	50%	75%	100%	0%	25%	50%	75%	100%
050	0%	25%	50%	75%	100%	0%	25%	50%	75%	100%
060	0%	25%	50%	75%	100%	0%	25%	50%	75%	100%

CAPACITY CONTROL STAGING OPTIONS TABLE E

48/50A030-060 UNITS VAV AND ADAPTIVE CV/SAV STAGING SEQUENCE WITH HOT GAS BYPASS STAGING SEQUENCE

STAGE	SEQUENCE 1						SEQUENCE 2					
	0	1	2	3	4	5	0	1	2	3	4	5
COMP	Compressor Status						Compressor Status					
A1	OFF	ON*	ON	OFF	OFF	ON	OFF	OFF	OFF	ON	ON	ON
A2	OFF	OFF	OFF	ON	ON	ON	OFF	ON*	ON	OFF	ON	ON
B1	OFF	OFF	OFF	ON	ON	ON	OFF	OFF	OFF	ON	ON	ON
B2	OFF	OFF	OFF	OFF	ON	ON	OFF	OFF	OFF	OFF	OFF	ON
UNIT	Capacity 48/50A						Capacity 48/50A					
030	0%	10%	25%	50%	75%	100%	0%	10%	25%	50%	75%	100%
035	0%	7%	20%	50%	80%	100%	0%	7%	20%	50%	70%	100%
040	0%	14%	25%	50%	75%	100%	0%	14%	25%	50%	75%	100%
050	0%	16%	25%	50%	75%	100%	0%	16%	25%	50%	75%	100%
060	0%	18%	25%	50%	75%	100%	0%	18%	25%	50%	75%	100%

*Hot gas bypass activated.

CAPACITY CONTROL STAGING OPTIONS TABLE F

48/50A030-060 UNITS VAV AND ADAPTIVE CV/SAV STAGING SEQUENCE WITH VARIABLE CAPACITY COMPRESSOR

STAGE	SEQUENCE 1				
	0	1	2	3	4
COMP	Compressor Status				
A1*	OFF	ON	ON	ON	ON
A2	OFF	OFF	OFF	ON	ON
B1	OFF	OFF	ON	ON	ON
B2	OFF	OFF	OFF	OFF	ON
UNIT	Capacity 48/50A				
030	0%	12.5% to 25%	37.5% to 50%	62.5% to 75%	87.5% to 100%
035	0%	9.8% to 19.6%	29.4% to 39.4%	59.8% to 69.6%	90.2% to 100%
040	0%	12.5% to 25%	37.5% to 50%	62.5% to 75%	87.5% to 100%
050	0%	12.5% to 25%	37.5% to 50%	62.5% to 75%	87.5% to 100%
060	0%	12.5% to 25%	37.5% to 50%	62.5% to 75%	87.5% to 100%

*On units with optional digital scroll compressor, compressor A1 modulates from minimum to maximum capacity to provide increased stages.

ALTITUDE COMPENSATION — 48A UNITS

ELEVATION (ft)	SIZES 020-035		SIZES 040-060	
	Natural Gas Orifice Drill Bit Size*	Liquid Propane Orifice Drill Bit Size*	Natural Gas Orifice Drill Bit Size*	Liquid Propane Orifice Drill Bit Size*
0-2,000	34	43	31	41
2,001- 3,000	7/64"	44	32	3/32"
3,001- 4,000	36	45	33	43
4,001- 5,000	37	45	33	43
5,001- 6,000	38	45	34	44
6,001- 7,000	39	47	36	44
7,001- 8,000	40	47	36	45
8,001- 9,000	41	48	37	45
9,001-10,000	3/32"	48	38	45
10,001-11,000	42	49	39	47
11,001-12,000	43	49	40	5/64"
12,001-13,000	43	50	41	48
13,001-14,000	44	50	3/32"	49

*Orifices available through your local Carrier distributor.

Physical data — 48A units

UNIT 48A	020	025	027	030
NOMINAL CAPACITY (tons)	20	25	27	30
BASE UNIT OPERATING WEIGHT (lb)	See Unit Weights Table			
COMPRESSOR				
Quantity ... Type (Ckt 1/Ckt 2)	2 ... ZP67/1...ZP91	2 ... ZP91/1...ZP91	2 ... ZP91/1...ZP91	2...ZP72, 2...ZP72
Number of Refrigerant Circuits	2	2	2	2
Oil	Precharged	Precharged	Precharged	Precharged
REFRIGERANT	R-410A			
Operating Charge (lb), Ckt 1/Ckt 2				
RTPF Coils	26.2/18.8	30.2/15.2	32.8/16.5	30.5/34.3
MCHX Coils	14.9/11.8	16.5/11.0	16.5/11.0	15.1/15.3
MCHX Coils with Humidi-MiZer	22.1/11.8	23.7/11.0	23.7/11.0	15.1/22.5
MCHX CONDENSER*				
Quantity	1	1	1	1
Total Face Area (sq ft)	32.9	32.9	32.9	32.9
RTPF CONDENSER				
Quantity	1	1	1	1
Rows...Fins/in.	2...15	3...15	3...15	4...15
Total Face Area (sq ft)	33.3	33.3	33.3	33.3
CONDENSER FAN	Propeller Type			
Nominal Cfm	19,500	19,500	19,500	19,500
Quantity... Diameter (in.)	2 ... 30	2 ... 30	2 ... 30	2 ... 30
Motor Hp	1	1	1	1
EVAPORATOR COIL	Cross-Hatched Copper Tubes, Aluminum Plate Fins with Intertwined Circuits			
Tube Size (in.)	3/8	3/8	3/8	3/8
Rows ... Fins/in.	3 ... 15	4 ... 14	4 ... 15	4 ... 15
Total Face Area (sq ft)	31.7	31.7	31.7	31.7
HUMIDI-MIZER COIL				
Coil Construction	E-Coated Aluminum Novation® Heat Exchanger with Microchannel Coil Technology			
Quantity	1	1	1	1
Face Area (sq ft)	14.4	14.4	14.4	14.4
EVAPORATOR FAN	Centrifugal Type			
Quantity ... Size (in.)	2 ... 20 X 15	2 ... 20 X 15	2 ... 20 X 15	2 ... 20 X 15
Type Drive	Belt	Belt	Belt	Belt
Nominal Cfm	8,000	10,000	11,000	12,000
Motor Hp	5 | 10 | 15	5 | 10 | 15	10 | 15 | 20	10 | 15 | 20
Motor Frame Size	184T | 215T | 254T	184T | 215T | 254T	215T | 254T | 256T	215T | 254T | 256T
Motor Bearing Type	Ball	Ball	Ball	Ball
Maximum Allowable Rpm	1200	1200	1200	1200
Motor Pulley Pitch Diameter	4.8 | 4.4 | 5.7	5.2 | 6.1 | 5.5	4.4 | 4.9 | 5.9	4.4 | 5.7 | 5.9
Nominal Motor Shaft Diameter (in.)	1 1/8 | 1 3/8 | 1 5/8	1 1/8 | 1 3/8 | 1 5/8	1 3/8 | 1 5/8 | 1 5/8	1 3/8 | 1 5/8 | 1 5/8
Fan Pulley Pitch Diameter (in.)	12.4 | 8.6 | 9.1	12.4 | 11.1 | 8.7	9.4 | 8.1 | 8.7	9.0 | 9.1 | 8.7
Nominal Fan Shaft Diameter (in.)	1 15/16	1 15/16	1 15/16	1 15/16
Belt Quantity	1 | 2 | 2	1 | 1 | 2	2 | 2 | 2	2 | 2 | 2
Belt Type	BX56 | BX50 | 5VX530	BX56 | 5VX570 | 5VX530	BX50 | 5VX500 | 5VX530	BX50 | 5VX530 | 5VX530
Belt Length (in.)	56 | 63 | 53	56 | 57 | 53	50 | 50 | 53	50 | 53 | 53
Pulley Center Line Distance (in.)	16.0-18.7 | 15.6-18.4 | 15.0-17.9	15.6-18.4 | 15.6-18.4 | 15.0-17.9	15.6-18.4 | 15.0-17.9 | 15.0-17.9	15.6-18.4 | 15.0-17.9 | 15.0-17.9
Factory Speed Setting (rpm)	717 | 924 | 1096	773 | 962 | 1106	848 | 1059 | 1187	856 | 1096 | 1187
FURNACE SECTION				
Supply Line Pressure Range	5.0-in. wg min/13.5-in. wg max.			
Rollout Switch Cutout Temp (F)†	225	225	225	225
Burner Orifice Diameter (in. ...drill size)				
Natural Gas Std	.111 ... 34	.111 ... 34	.111 ... 34	.111 ... 34
Liquid Propane Alt	.089 ... 43	.089 ... 43	.089 ... 43	.089 ... 43
Thermostat Heat Anticipator Setting				
Stage 1 (amps)	0.1	0.1	0.1	0.1
Stage 2 (amps)	0.1	0.1	0.1	0.1
Gas Input (Btuh) Stage 1 (Low Heat/High Heat)	262,500/394,000	262,500/394,000	262,500/394,000	262,500/394,000
Stage 2 (Low Heat/High Heat)	350,000/525,000	350,000/525,000	350,000/525,000	350,000/525,000
Efficiency (Steady State) (%)	81	81	81	81
Temperature Rise Range	15-45/35-65	15-45/35-65	15-45/35-65	15-45/35-65
Manifold Pressure (in. wg)				
Natural Gas Std	3.5	3.5	3.5	3.5
Liquid Propane Alt	3.5	3.5	3.5	3.5
Gas Valve Quantity	2	2	2	2
HIGH-PRESSURE SWITCH (psig)				
Cutout	650	650	650	650
Reset (Auto.)	500	500	500	500
MIXED-AIR FILTERS				
Quantity ... Size (in.) Standard	10 ... 20 x 24 x 2	10 ... 20 x 24 x 2	10 ... 20 x 24 x 2	10 ... 20 x 24 x 2
Pleated	5 ... 20 x 20 x 4 5 ... 20 x 24 x 4	5 ... 20 x 20 x 4 5 ... 20 x 24 x 4	5 ... 20 x 20 x 4 5 ... 20 x 24 x 4	5 ... 20 x 20 x 4 5 ... 20 x 24 x 4
OUTDOOR-AIR FILTERS				
Quantity...Size (in.)	8...16 x 25 x 2 4...20 x 25 x 2			
POWER EXHAUST	Direct Drive, Single-Phase Motors (Factory-Wired for High Speed Operation), Forward-Curved Fan Wheels with Backdraft Dampers on Each Fan Housing			
Motor, Quantity...Hp	4...1			
Fan, Diameter...Width (in.)	11 x 10			

LEGEND

Al — Aluminum
Cu — Copper
MCHX — Microchannel Heat Exchanger
RTPF — Round Tube Plate Fin

* Sizes 020 to 027: Circuit 1 uses the lower portion of condenser coil, Circuit 2 uses the upper portion. Sizes 030 and 035: Circuit 1 uses the upper portion of condenser coil, Circuit 2 uses the lower portion. Sizes 040 and 050: Circuit 1 uses the left condenser coil, Circuit 2 the right. Size 060: Circuit A uses the two MCHX coils near the bulkhead, Circuit B uses the two MCHX coils near the control box.

† Rollout switch is manual reset.

Physical data — 48A units (cont)

UNIT 48A	035	040	050	060
NOMINAL CAPACITY (tons)	35	40	50	60
BASE UNIT OPERATING WEIGHT (lb)	See Unit Weights Table			
COMPRESSOR				
Quantity ... Type (Ckt 1/Ckt 2)	2 ... ZP67/2...ZP104	2...ZP104/2...ZP104	2...ZP122/2...ZP122	2...ZP154/2...ZP154
Number of Refrigerant Circuits	2	2	2	2
Oil	Precharged	Precharged	Precharged	Precharged
REFRIGERANT	R-410A			
Operating Charge (lb), Ckt 1/Ckt 2				
RTPF Coils	28.7 / 44.0	44.0 / 44.0	56.3 / 57.3	78.5 / 82.0
MCHX Coils	17.9 / 26.0	23.0 / 23.5	27.0 / 28.0	36.3 / 37.8
MCHX Coils with Humidi-MiZer	17.9 / 31.5	23.0 / 30.5	26.5 / 34.5	36.3 / 47.6
MCHX CONDENSER*				
Quantity	1	2	2	4
Total Face Area (sq ft)	32.9	65.8	65.8	105.2
RTPF CONDENSER				
Quantity	1	2	2	2
Rows...Fins/in.	4...15	3...15	4...15	6...30
Total Face Area (sq ft)	33.3	66.7	66.7	100.0
CONDENSER FAN	Propeller Type			
Nominal Cfm	19,500	32,000	35,000	40,000
Quantity... Diameter (in.)	2 ... 30	4 ... 30	4 ... 30	4...30.5(MCHX), 6...30(RTPF)
Motor Hp	1	1	1	1
EVAPORATOR COIL	Cross-Hatched Copper Tubes, Aluminum Plate Fins with Intertwined Circuits			
Tube Size (in.)	1/2	1/2	1/2	1/2
Rows ... Fins/in.	6 ... 16	4 ... 17	6 ... 16	4...17
Total Face Area (sq ft)	31.3	31.3	31.3	48.1
HUMIDI-MIZER COIL				
Coil Construction	E-Coated Aluminum Novation® Heat Exchanger with Microchannel Coil Technology			
Quantity	1	1	1	1
Face Area (sq ft)	14.4	14.4	14.4	14.1
EVAPORATOR FAN	Centrifugal Type			
Quantity ... Size (in.)	2 ... 20 X 15	2 ... 20 X 15	2 ... 20 X 15	3 ... 20 X 15
Type Drive	Belt	Belt	Belt	Belt
Nominal Cfm	14,000	16,000	18,000	24,000
Motor Hp	15 | 20 | 25	15 | 20 | 25	20 | 25 | 30	25 | 30 | 40
Motor Frame Size	254T | 256T | 284T	254T | 256T | 284T	256T | 284T | 286T	284T | 286T | 324T
Motor Bearing Type	Ball	Ball	Ball	Ball
Maximum Allowable Rpm	1300	1300	1300	1200
Motor Pulley Pitch Diameter (in.)	5.1 | 5.7 | 6.2	5.3 | 5.7 | 7.5	5.7 | 6.2 | 6.7	5.3 | 5.9 | 6.5
Nominal Motor Shaft Diameter (in.)	1 6/8 | 1 6/8 | 1 7/8	1 6/8 | 1 6/8 | 1 7/8	1 6/8 | 1 7/8 | 1 7/8	1 7/8 | 1 7/8 | 2 1/8
Fan Pulley Pitch Diameter (in.)	8.7 | 8.7 | 8.7	9.5 | 9.5 | 11.1	9.5 | 9.5 | 9.5	9.1 | 9.5 | 9.5
Nominal Fan Shaft Diameter (in.)	| 1 15/16 |	| 1 15/16 |	| 1 15/16 |	| 1 15/16 |
Belt Quantity	2 | 2 | 2	2 | 2 | 2	2 | 2 | 2	3 | 3 | 3
Belt Type	5VX500 | 5VX530 | 5VX550	5VX530 | 5VX550 | 5VX590	5VX550 | 5VX570 | 5VX570	5VX530 | 5VX550 | 5VX570
Belt Length (in.)	50 | 53 | 55	53 | 55 | 59	55 | 57 | 57	53 | 55 | 57
Pulley Center Line Distance (in.)	15.0-17.9 | 15.0-17.9 | 15.0-17.9	15.0-17.9 | 15.0-17.9 | 14.6-17.6	15.0-17.9 | 14.6-17.6 | 14.6-17.6	15.2-17.5 | 14.7-17.2 | 14.2-17.0
Factory Speed Setting (rpm)	1025 | 1147 | 1247	976 | 1050 | 1182	1050 | 1142 | 1234	1019 | 1087 | 1197
FURNACE SECTION				
Supply Line Pressure Range	5.0-in. wg min/13.5-in. wg max.			
Rollout Switch Cutout Temp (F)†	225	225	225	225
Burner Orifice Diameter (in ...drill size)				
Natural Gas Std	.111 ... 34 (low)/.120 ... 31 (high)	.120 ... 31	.120 ... 31	.120...31
Liquid Propane Alt	.089 ... 43	.096 ... 41	.096 ... 41	.096...41
Thermostat Heat Anticipator Setting				
Stage 1 (amps)	0.1	0.24	0.1	0.1
Stage 2 (amps)	0.1	0.13	0.1	0.1
Gas Input (Btuh) Stage 1 (Low Heat/High Heat)	262,500/600,000	300,000/800,000	300,000/800,000	582,000/873,000
Stage 2 (Low Heat/High Heat)	350,000/800,000	400,000/800,000	400,000/800,000	776,000/1,164,000
Efficiency (Steady State) (%)	81	81	81	81
Temperature Rise Range	15-45/30-60	10-40/30-60	10-40/30-60	10-40/30-60
Manifold Pressure (in. wg)				
Natural Gas Std	3.5	3.5	3.5	3.3
Liquid Propane Alt	3.5	3.5	3.5	3.3
Gas Valve Quantity	2	2	2	3
HIGH-PRESSURE SWITCH (psig)				
Cutout	650	650	650	650
Reset (Auto.)	500	500	500	500
MIXED-AIR FILTERS				
Quantity ... Size (in.) Standard	10 ... 20 x 24 x 2	10 ... 20 x 24 x 2	10 ... 20 x 24 x 2	16...20 x 24 x 2
Pleated	5 ... 20 x 20 x 4	5 ... 20 x 20 x 4	5 ... 20 x 20 x 4	8...20 x 20 x 4
	5 ... 20 x 24 x 4	5 ... 20 x 24 x 4	5 ... 20 x 24 x 4	8...20 x 24 x 4
OUTDOOR-AIR FILTERS				
Quantity...Size (in.)	8...16 x 25 x 2	8...16 x 25 x 2	8...16 x 25 x 2	12...16 x 25 x 2
	4...20 x 25 x 2	4...20 x 25 x 2	4...20 x 25 x 2	6...20 x 25 x 2
POWER EXHAUST	Direct Drive, Single-Phase Motors (Factory-Wired for High Speed Operation), Forward-Curved Fan Wheels with Backdraft Dampers on Each Fan Housing			
Motor, Quantity...Hp	4...1	4...1	4...1	6...1
Fan, Diameter...Width (in.)	11 x 10	11 x 10	11 x 10	11 x 10

LEGEND

Al — Aluminum
Cu — Copper
MCHX — Microchannel Heat Exchanger
RTPF — Round Tube Plate Fin

* Sizes 020 to 027: Circuit 1 uses the lower portion of condenser coil, Circuit 2 uses the upper portion. Sizes 030 and 035: Circuit 1 uses the upper portion of condenser coil, Circuit 2 uses the lower portion. Sizes 040 and 050: Circuit 1 uses the left condenser coil, Circuit 2 the right. Size 060: Circuit A uses the two MCHX coils near the bulkhead, Circuit B uses the two MCHX coils near the control box.

† Rollout switch is manual reset.

Physical data — 50A units

UNIT 50A	020			025			027			030		
NOMINAL CAPACITY (tons)	20			25			27			30		
BASE UNIT OPERATING WEIGHT (lb)	See Unit Weights Table											
COMPRESSOR												
Quantity ... Type (Ckt 1/Ckt 2)	2 ... ZP67/1...ZP91			2 ... ZP91/1...ZP91			2 ... ZP91/1...ZP91			2...ZP72, 2...ZP72		
Number of Refrigerant Circuits	2			2			2			2		
Oil	Precharged			Precharged			Precharged			Precharged		
REFRIGERANT	R-410A											
Operating Charge (lb), Ckt 1/Ckt 2												
RTPF Coils	26.2/18.8			30.2/15.2			32.8/16.5			30.5/34.3		
MCHX Coils	14.9/11.8			16.5/11.0			16.5/11.0			15.1/15.3		
MCHX Coils with Humidi-MIZer	22.1/11.8			23.7/11.0			23.7/11.0			15.1/22.5		
MCHX CONDENSER*												
Quantity	1			1			1			1		
Total Face Area (sq ft)	32.9			32.9			32.9			32.9		
RTPF CONDENSER												
Quantity	1			1			1			1		
Rows...Fins/in.	2...15			3...15			3...15			4...15		
Total Face Area (sq ft)	33.3			33.3			33.3			33.3		
CONDENSER FAN	Propeller Type											
Nominal Cfm	19,500			19,500			19,500			19,500		
Quantity... Diameter (in.)	2 ... 30			2 ... 30			2 ... 30			2 ... 30		
Motor Hp	1			1			1			1		
EVAPORATOR COIL	Cross-Hatched Copper Tubes, Aluminum Plate Fins with Intertwined Circuits											
Tube Size (in.)	3/8			3/8			3/8			3/8		
Rows ... Fins/in.	3 ... 15			4 ... 14			4 ... 15			4 ... 15		
Total Face Area (sq ft)	31.7			31.7			31.7			31.7		
HUMIDI-MIZER COIL												
Coil Construction	E-Coated Aluminum Novation® Heat Exchanger with Microchannel Coil Technology											
Quantity	1			1			1			1		
Face Area (sq ft)	14.4			14.4			14.4			14.4		
EVAPORATOR FAN	Centrifugal Type											
Quantity ... Size (in.)	2 ... 20 X 15			2 ... 20 X 15			2 ... 20 X 15			2 ... 20 X 15		
Type Drive	Belt			Belt			Belt			Belt		
Nominal Cfm	8,000			10,000			11,000			12,000		
Motor Hp	5	10	15	5	10	15	10	15	20	10	15	20
Motor Frame Size	184T	215T	254T	184T	215T	254T	215T	254T	256T	215T	254T	256T
Motor Bearing Type		Ball			Ball			Ball			Ball	
Maximum Allowable Rpm		1200			1200			1200			1200	
Motor Pulley Pitch Diameter	4.8	4.4	5.7	5.2	6.1	5.5	4.4	4.9	5.9	4.4	5.7	5.9
Nominal Motor Shaft Diameter (in.)	1 1/8	1 3/8	1 5/8	1 1/8	1 3/8	1 5/8	1 3/8	1 5/8	1 5/8	1 3/8	1 5/8	1 5/8
Fan Pulley Pitch Diameter (in.)	12.4	8.6	9.1	12.4	11.1	8.7	9.4	8.1	8.7	9.0	9.1	8.7
Nominal Fan Shaft Diameter (in.)		1 15/16			1 15/16			1 15/16			1 15/16	
Belt Quantity	1	2	2	1	1	2	2	2	2	2	2	2
Belt Type	BX56	BX50	5VX530	BX56	5VX570	5VX530	BX50	5VX500	5VX530	BX50	5VX530	5VX530
Belt Length (in.)	56	63	53	56	57	53	50	50	53	50	53	53
Pulley Center Line Distance (in.)	16.0-18.7	15.6-18.4	15.0-17.9	15.6-18.4	15.6-18.4	15.0-17.9	15.6-18.4	15.0-17.9	15.0-17.9	15.6-18.4	15.0-17.9	15.0-17.9
Factory Speed Setting (rpm)	717	924	1096	773	982	1106	848	1059	1187	856	1098	1187
HIGH-PRESSURE SWITCH (psig)												
Cutout	650			650			650			650		
Reset (Auto.)	500			500			500			500		
MIXED-AIR FILTERS												
Quantity ... Size (in.) Standard	10 ... 20 x 24 x 2			10 ... 20 x 24 x 2			10 ... 20 x 24 x 2			10 ... 20 x 24 x 2		
Pleated	5 ... 20 x 20 x 4			5 ... 20 x 20 x 4			5 ... 20 x 20 x 4			5 ... 20 x 20 x 4		
	5 ... 20 x 24 x 4			5 ... 20 x 24 x 4			5 ... 20 x 24 x 4			5 ... 20 x 24 x 4		
OUTDOOR-AIR FILTERS												
Quantity...Size (in.)	8...16 x 25 x 2 4...20 x 25 x 2											
POWER EXHAUST	Direct Drive, Single-Phase Motors (Factory-Wired for High Speed Operation), Forward-Curved Fan Wheels with Backdraft Dampers on Each Fan Housing											
Motor, Quantity...Hp	4...1											
Fan, Diameter...Width (in.)	11 x 10											

LEGEND

Al — Aluminum
Cu — Copper
MCHX — Microchannel Heat Exchanger
RTPF — Round Tube Plate Fin

* Sizes 020 to 027: Circuit 1 uses the lower portion of condenser coil, Circuit 2 uses the upper portion. Sizes 030 and 035: Circuit 1 uses the upper portion of condenser coil, Circuit 2 uses the lower portion. Sizes 040 and 050: Circuit 1 uses the left condenser coil, Circuit 2 the right. Size 060: Circuit A uses the two MCHX coils near the bulkhead, Circuit B uses the two MCHX coils near the control box.

† Rollout switch is manual reset.

Physical data — 50A units (cont)

UNIT 50A	035	040	050	060
NOMINAL CAPACITY (tons)	35	40	50	60
BASE UNIT OPERATING WEIGHT (lb)	See Unit Weights Table			
COMPRESSOR				
Quantity ... Type (Ckt 1/Ckt 2)	2 ... ZP67/2...ZP104	2...ZP104/2...ZP104	2...ZP122/2...ZP122	2...ZP154/2...ZP154
Number of Refrigerant Circuits	2	2	2	2
Oil	Precharged	Precharged	Precharged	Precharged
REFRIGERANT	R-410A			
Operating Charge (lb), Ckt 1/Ckt 2				
RTPF Coils	28.7 / 44.0	44.0 / 44.0	56.3 / 57.3	78.5 / 82.0
MCHX Coils	17.9 / 26.0	23.0 / 23.5	27.0 / 28.0	36.3 / 37.8
MCHX Coils with Humidi-MIZer	17.9 / 31.5	23.0 / 30.5	26.5 / 34.5	36.3 / 47.6
MCHX CONDENSER*				
Quantity	1	2	2	4
Total Face Area (sq ft)	32.9	65.8	65.8	105.2
RTPF CONDENSER				
Quantity	1	2	2	2
Rows...Fins/in	4...15	3...15	4...15	6...30
Total Face Area (sq ft)	33.3	66.7	66.7	100.0
CONDENSER FAN	Propeller Type			
Nominal Cfm	19,500	32,000	35,000	40,000
Quantity... Diameter (in.)	2 ... 30	4 ... 30	4 ... 30	4...30.5(MCHX), 6...30(RTPF)
Motor Hp	1	1	1	1
EVAPORATOR COIL	Cross-Hatched Copper Tubes, Aluminum Plate Fins with Intertwined Circuits			
Tube Size (in.)	1/2	1/2	1/2	1/2
Rows ... Fins/in.	6 ... 16	4 ... 17	6 ... 16	4...17
Total Face Area (sq ft)	31.3	31.3	31.3	48.1
HUMIDI-MIZER COIL				
Coil Construction	E-Coated Aluminum Novation® Heat Exchanger with Microchannel Coil Technology			
Quantity	1	1	1	1
Face Area (sq ft)	14.4	14.4	14.4	14.4
EVAPORATOR FAN	Centrifugal Type			
Quantity ... Size (in.)	2 ... 20 X 15	2 ... 20 X 15	2 ... 20 X 15	3 ... 20 X 15
Type Drive	Belt	Belt	Belt	Belt
Nominal Cfm	14,000	16,000	18,000	24,000
Motor Hp	15 | 20 | 25	15 | 20 | 25	20 | 25 | 30	25 | 30 | 40
Motor Frame Size	254T | 256T | 284T	254T | 256T | 284T	256T | 284T | 286T	284T | 286T | 324T
Motor Bearing Type	Ball	Ball	Ball	Ball
Maximum Allowable Rpm	1300	1300	1300	1200
Motor Pulley Pitch Diameter	5.1 | 5.7 | 6.2	5.3 | 5.7 | 7.5	5.7 | 6.2 | 6.7	5.3 | 5.9 | 6.5
Nominal Motor Shaft Diameter (in.)	1 5/8 | 1 5/8 | 1 7/8	1 5/8 | 1 5/8 | 1 7/8	1 5/8 | 1 7/8 | 1 7/8	1 7/8 | 1 7/8 | 2 1/8
Fan Pulley Pitch Diameter (in.)	8.7 | 8.7 | 8.7	9.5 | 9.5 | 11.1	9.5 | 9.5 | 9.5	9.1 | 9.5 | 9.5
Nominal Fan Shaft Diameter (in.)	1 15/16	1 15/16	1 15/16	1 15/16
Belt Quantity	2 | 2 | 2	2 | 2 | 2	2 | 2 | 2	3 | 3 | 3
Belt Type	5VX500 | 5VX530 | 5VX550	5VX530 | 5VX550 | 5VX590	5VX550 | 5VX570 | 5VX570	5VX530 | 5VX550 | 5VX570
Belt Length (in.)	50 | 53 | 55	53 | 55 | 59	55 | 57 | 57	53 | 55 | 57
Pulley Center Line Distance (in.)	15.0-17.9 | 15.0-17.9 | 15.0-17.9	15.0-17.9 | 15.0-17.9 | 14.6-17.6	15.0-17.9 | 14.6-17.6 | 14.6-17.6	15.2-17.5 | 14.7-17.2 | 14.2-17.0
Factory Speed Setting (rpm)	1025 | 1147 | 1247	976 | 1050 | 1182	1050 | 1142 | 1234	1019 | 1087 | 1197
HIGH-PRESSURE SWITCH (psig)				
Cutout	650	650	650	650
Reset (Auto.)	500	500	500	500
MIXED-AIR FILTERS				
Quantity ... Size (in.) Standard	10 ... 20 x 24 x 2	10 ... 20 x 24 x 2	10 ... 20 x 24 x 2	16...20 x 24 x 2
Pleated	5 ... 20 x 20 x 4 5 ... 20 x 24 x 4	5 ... 20 x 20 x 4 5 ... 20 x 24 x 4	5 ... 20 x 20 x 4 5 ... 20 x 24 x 4	8...20 x 20 x 4 8...20 x 24 x 4
OUTDOOR-AIR FILTERS				
Quantity...Size (in.)	8...16 x 25 x 2 4...20 x 25 x 2	8...16 x 25 x 2 4...20 x 25 x 2	8...16 x 25 x 2 4...20 x 25 x 2	12...16 x 25 x 2 8...20 x 25 x 2
POWER EXHAUST	Direct Drive, Single-Phase Motors (Factory-Wired for High Speed Operation), Forward-Curved Fan Wheels with Backdraft Dampers on Each Fan Housing			
Motor, Quantity...Hp	4...1	4...1	4...1	6...1
Fan, Diameter...Width (in.)	11 x 10	11 x 10	11 x 10	11 x 10

LEGEND

Al — Aluminum
Cu — Copper
MCHX — Microchannel Heat Exchanger
RTPF — Round Tube Plate Fin

* Sizes 020 to 027: Circuit 1 uses the lower portion of condenser coil, Circuit 2 uses the upper portion. Sizes 030 and 035: Circuit 1 uses the upper portion of condenser coil, Circuit 2 uses the lower portion. Sizes 040 and 050: Circuit 1 uses the left condenser coil, Circuit 2 the right. Size 060: Circuit A uses the two MCHX coils near the bulkhead, Circuit B uses the two MCHX coils near the control box.
† Rollout switch is manual reset.

Physical data

48/50A020-060 UNIT WEIGHTS

BASE UNIT WEIGHTS* (lb)

UNIT	020	025	027	030	035	040	050	060
48A2D,A3D,A6D,A7D	3825	3961	3961	3992	4340	4770	4914	7066
48A2E,A3E,A6E,A7E	3905	4041	4041	4072	4500	4930	5074	7306
48A4D,A5D,A8D,A9D	3865	4001	4001	4032	4380	4810	4954	7106
48A4E,A5E,A8E,A9E	3945	4081	4081	4112	4540	4970	5114	7356
50A2,A3,A6,A7	3825	3761	3761	3792	4025	4455	4599	6826
50A4,A5,A8,A9	3703	3839	3839	3870	4218	4648	4792	7041
	OPTIONS/ACCESSORIES (WEIGHT ADDERS) (lb)							
Barometric Relief	300	300	300	300	300	300	300	450
Non-Modulating Power Exhaust	450	450	450	450	450	450	450	675
Modulating Power Exhaust	500	500	500	500	500	500	500	725
Electric Heat	110	110	110	110	110	110	110	165
Cu Tube/Aluminum Fin Condenser Coil	100	100	100	150	150	187	317	26
Cu Tube/Cu Fin Condenser Coil	263	263	263	370	370	512	751	677
OA Hood Crate/Packaging (Less Hoods' Weight)	45	45	45	45	45	45	45	45
	(Packaging Only)							
Outdoor Air Hoods/Filters (included with unit)	170	170	170	170	170	170	170	255
Hail Guards	73	73	73	73	73	146	146	219
Roof Curb (14-in.)	365	365	365	365	365	410	410	540
Double Wall	275	275	275	275	275	275	275	375
Humidi-MiZer® Adaptive Dehumidification Option	150	150	150	150	150	180	180	195

CV MOTOR WEIGHTS (lb)

MOTOR HP	UNIT VOLTAGE	PREMIUM EFFICIENCY IFM
5 HP	230/460	80
	380	75
	575	80
10 HP	230/460	126
	380	120
	575	126
15 HP	230/460	217
	380	155
	575	217
20 HP	230/460	250
	380	185
	575	250
25 HP	230/460	309
	380	225
	575	309
30 HP	230/460	303
	380	283
	575	303
40 HP	230/460	551
	380	601
	575	551

SAV™/VAV MOTOR WEIGHTS (lb)

MOTOR HP	UNIT VOLTAGE	PREMIUM EFFICIENCY IFM
5 HP	230/460	138
	380	133
	575	149
10 HP	230/460	195
	380	198
	575	195
15 HP	230/460	316
	380	254
	575	319
20 HP	230/460	385
	380	320
	575	357
25 HP	230/460	444
	380	360
	575	454
30 HP	230/460	338
	380	318
	575	342
40 HP	230/460	686
	380	736
	575	686

LEGEND

Cu — Copper
CV — Constant Volume
FIOP — Factory-Installed Option
HP — Horsepower
IFM — Indoor Fan Motor
OA — Outdoor Air
SAV — Staged Air Volume
VAV — Variable Air Volume
VFD — Variable Frequency Drive

* Outdoor-air hoods and filters included in base unit weights; indoor-fan motors are NOT included.

NOTES:
1. Base Unit Weight includes OA hoods (economizer or outdoor air damper); does not include an indoor-fan motor. ADD indoor motor, FIOPs and Accessories for TOTAL operating weight.
2. VAV Motor Weights include the indoor motor and the VFD, optional VFD bypass, VFD transducer and associated wiring.

Physical data (cont)

CENTER OF GRAVITY AND CORNER WEIGHTS

48/50A2,A4,A6,A8 CONSTANT VOLUME UNITS

UNIT	WEIGHT (lb)	CENTER OF GRAVITY (in.)		CORNER WEIGHT (lb)			
		A	B	1	2	3	4
50A2,A6020	4500	97.4	44.7	906	937	1348	1310
48A2,A6D020	4590	96.3	44.2	950	962	1346	1333
48A2,A6E020	4670	95.7	43.9	981	979	1352	1358
50A4,A8020	4078	97.5	44.7	820	850	1223	1186
48A4,A8D020	4130	96.3	44.3	853	866	1213	1198
48A4,A8E020	4210	95.8	44.0	883	883	1221	1224
50A2,A6025	4636	98.0	44.5	920	963	1379	1374
48A2,A6D025	4726	96.9	44.0	964	988	1377	1397
48A2,A6E025	4806	96.3	43.7	995	1005	1383	1423
50A4,A8025	4214	98.1	44.5	834	876	1255	1250
48A4,A8D025	4266	97.0	44.1	867	892	1244	1263
48A4,A8E025	4346	96.4	43.8	897	909	1252	1288
50A2,A6027	4674	97.2	44.1	958	963	1379	1374
48A2,A6D027	4764	96.1	43.7	1002	988	1377	1397
48A2,A6E027	4844	95.6	43.4	1033	1005	1383	1423
50A4,A8027	4252	97.2	44.1	872	876	1255	1250
48A4,A8D027	4304	96.1	43.7	905	892	1244	1263
48A4,A8E027	4384	95.6	43.4	935	909	1252	1288
50A2,A6030	4705	95.1	44.4	987	1006	1369	1343
48A2,A6D030	4795	94.0	44.0	1032	1032	1366	1366
48A2,A6E030	4875	93.5	43.7	1063	1049	1372	1392
50A4,A8030	4283	94.9	44.4	901	918	1244	1220
48A4,A8D030	4335	93.8	44.0	935	935	1232	1232
48A4,A8E030	4415	93.3	43.7	966	952	1239	1258
50A2,A6035	4999	95.9	41.5	1107	988	1367	1537
48A2,A6D035	5204	94.8	41.0	1181	1034	1393	1596
48A2,A6E035	5364	94.2	40.7	1235	1067	1417	1645
50A4,A8035	4692	95.8	41.5	1040	928	1282	1442
48A4,A8D035	4744	94.7	41.0	1078	944	1269	1454
48A4,A8E035	4904	94.1	40.7	1131	976	1294	1503
50A2,A6040	5429	121.7	41.4	1245	1110	1444	1629
48A2,A6D040	5634	120.3	41.0	1324	1159	1466	1686
48A2,A6E040	5794	118.8	40.7	1392	1202	1477	1723
50A4,A8040	5122	121.6	41.4	1177	1049	1361	1536
48A4,A8D040	5174	120.0	41.0	1219	1067	1343	1546
48A4,A8E040	5334	118.6	40.7	1284	1108	1357	1584
50A2,A6050	5613	119.3	41.7	1310	1188	1472	1644
48A2,A6D050	5818	117.9	41.3	1390	1237	1491	1700
48A2,A6E050	5978	116.5	41.0	1459	1281	1501	1738
50A4,A8050	5306	119.0	41.7	1243	1127	1387	1550
48A4,A8D050	5358	117.4	41.3	1287	1146	1366	1559
48A4,A8E050	5518	115.9	40.9	1354	1189	1378	1598
50A2,A6060	8176	184.9	43.4	1683	1637	2393	2463
48A2,A6D060	8251	177.5	41.3	1879	1666	2206	2500
48A2,A6E060	8491	170.4	39.2	2126	1718	2067	2580
50A4,A8060	7666	184.7	43.4	1580	1537	2242	2307
48A4,A8D060	7566	177.3	41.3	1727	1531	2019	2290
48A4,A8E060	7816	170.1	39.2	1961	1585	1898	2373

NOTES:
1. Center of gravity ⊕.
2. The weight distribution and center of gravity information are representative of a standard unit and include the impact of factory-installed options such as electric heat (50A only), economizer, and modulating power exhaust.

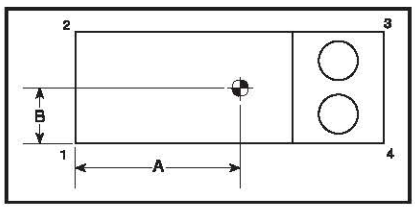

CENTER OF GRAVITY AND CORNER WEIGHTS (cont)

48/50A3,A5,A7,A9 VARIABLE AIR VOLUME UNITS

UNIT	WEIGHT (lb)	CENTER OF GRAVITY (in.)		CORNER WEIGHT (lb)			
		A	B	1	2	3	4
50A3,A7020	4599	98.0	44.9	905	963	1385	1347
48A3,A7D020	4689	96.8	44.5	949	989	1382	1370
48A3,A7E020	4769	96.3	44.2	980	1006	1388	1396
50A5,A9020	4177	98.1	45.0	818	876	1261	1223
48A5,A9D020	4229	96.9	44.6	852	893	1249	1235
48A5,A9E020	4309	96.4	44.2	882	910	1257	1261
50A3,A7025	4735	98.5	44.7	918	989	1416	1411
48A3,A7D025	4825	97.4	44.3	963	1015	1414	1434
48A3,A7E025	4905	96.9	44.0	994	1032	1419	1460
50A5,A9025	4313	98.7	44.8	832	902	1292	1287
48A5,A9D025	4365	97.5	44.3	866	919	1281	1300
48A5,A9E025	4445	97.0	44.0	896	936	1288	1325
50A3,A7027	4801	97.2	44.1	984	989	1416	1411
48A3,A7D027	4891	96.1	43.7	1029	1015	1414	1434
48A3,A7E027	4971	95.6	43.4	1060	1032	1419	1460
50A5,A9027	4379	97.2	44.1	898	902	1292	1287
48A5,A9D027	4431	96.1	43.7	932	919	1281	1300
48A5,A9E027	4511	95.6	43.4	962	936	1288	1325
50A3,A7030	4832	95.2	44.4	1013	1032	1407	1380
48A3,A7D030	4922	94.1	44.0	1058	1058	1403	1403
48A3,A7E030	5002	93.6	43.7	1090	1075	1408	1428
50A5,A9030	4410	95.0	44.4	927	944	1282	1257
48A5,A9D030	4462	93.9	44.0	962	962	1269	1269
48A5,A9E030	4542	93.4	43.7	993	979	1276	1295
50A3,A7035	5134	95.9	41.5	1137	1014	1405	1579
48A3,A7D035	5339	94.8	41.0	1211	1061	1430	1637
48A3,A7E035	5499	94.2	40.7	1266	1093	1453	1687
50A5,A9035	4827	95.8	41.5	1070	954	1320	1484
48A5,A9D035	4879	94.7	41.0	1108	970	1305	1495
48A5,A9E035	5039	94.1	40.7	1161	1003	1330	1545
50A3,A7040	5564	121.8	41.4	1276	1137	1481	1671
48A3,A7D040	5769	120.3	41.0	1355	1186	1502	1727
48A3,A7E040	5929	118.8	40.7	1423	1229	1513	1764
50A5,A9040	5257	121.6	41.4	1207	1076	1398	1577
48A5,A9D040	5309	120.1	41.0	1250	1094	1379	1587
48A5,A9E040	5469	118.6	40.7	1316	1136	1393	1625
50A3,A7050	5744	119.5	41.7	1338	1214	1509	1684
48A3,A7D050	5949	118.1	41.3	1419	1264	1527	1740
48A3,A7E050	6109	116.6	41.0	1489	1308	1536	1777
50A5,A9050	5437	119.1	41.7	1271	1153	1423	1590
48A5,A9D050	5489	117.5	41.3	1316	1172	1402	1599
48A5,A9E050	5649	116.1	40.9	1384	1215	1413	1638
50A3,A7060	8311	184.9	43.4	1710	1663	2433	2504
48A3,A7D060	8386	177.6	41.3	1909	1693	2243	2541
48A3,A7E060	8626	170.4	39.2	2159	1745	2100	2622
50A5,A9060	7801	184.8	43.4	1608	1564	2282	2349
48A5,A9D060	7701	177.3	41.3	1757	1558	2056	2331
48A5,A9E060	7951	170.1	39.2	1994	1611	1932	2414

NOTES:
1. Center of gravity ⊕.
2. The weight distribution and center of gravity information are representative of a standard unit and include the impact of factory-installed options such as electric heat (50A only), economizer, and modulating power exhaust.

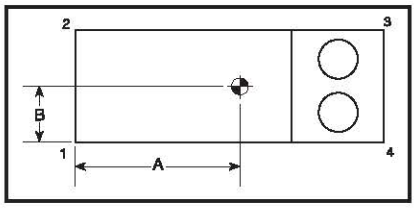

Physical data (cont)

FIOP AND ACCESSORY CORNER WEIGHT ADJUSTMENTS

UNIT	WEIGHT (lb)	CORNER WEIGHTS (lb)			
		1	2	3	4
48/50A 020-027					
Barometric Relief	300	2	185	111	1
Non Mod. Power Exhaust	450	3	278	167	2
Mod. Power Exhaust	500	4	309	186	2
Electric Heat	110	59	10	6	35
Al/Cu Cond Coil	100	1	1	49	49
Cu/Cu Cond Coil	263	2	2	129	129
Hail Guards	73	0	0	36	36
Humidi-MiZer Coil	150	26	41	51	32
48/50A 030,035					
Barometric Relief	300	2	185	111	1
Non Mod. Power Exhaust	450	3	278	167	2
Mod. Power Exhaust	500	4	309	186	2
Electric Heat	110	59	10	6	35
Al/Cu Cond coil	150	1	1	74	74
Cu/Cu Cond Coil	370	3	3	182	182
Hail Guards	73	0	0	36	36
Humidi-MiZer Coil	150	26	41	51	32
48/50A 040					
Barometric Relief	300	2	211	86	1
Non Mod. Power Exhaust	450	4	317	128	1
Mod. Power Exhaust	500	4	352	143	2
Electric Heat	110	67	12	5	27
Al/Cu Cond Coil	187	2	2	92	92
Cu/Cu Cond Coil	512	5	5	252	252
Hail Guards	146	0	0	73	73
Humidi-MiZer Coil	180	32	50	60	38
48/50A 050					
Barometric Relief	300	2	211	86	1
Non Mod. Power Exhaust	450	4	317	128	1
Mod. Power Exhaust	500	4	352	143	2
Electric Heat	110	67	12	5	27
Al/Cu Cond Coil	317	34	34	124	124
Cu/Cu Cond Coil	751	80	80	295	295
Hail Guards	146	0	0	73	73
Humidi-MiZer Coil	180	32	50	60	38
48/50A 060					
Barometric Relief	450	4	319	126	1
Non Mod. Power Exhaust	675	6	479	189	2
Mod. Power Exhaust	725	6	514	203	2
Electric Heat	165	101	17	7	40
Al/Cu Cond Coil	26	0	0	13	13
Cu/Cu Cond Coil	677	72	72	266	266
Hail Guards	219	0	0	109	109
Humidi-MiZer Coil	195	37	58	62	39

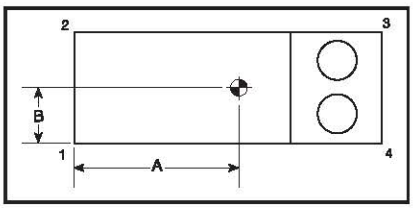

Options and accessories

ITEM	FACTORY-INSTALLED OPTIONS				FIELD-INSTALLED ACCESSORIES			
	A2,A6	A3,A7	A4,A8	A5,A9	A2,A6	A3,A7	A4,A8	A5,A9
GAS HEAT OPTIONS (48A Only)								
Low Gas Heat - Aluminized	X	X	X	X				
High Gas Heat - Aluminized	X	X	X	X				
Low Gas Heat - Stainless Steel	X	X	X	X				
High Gas Heat - Stainless Steel	X	X	X	X				
Staged Gas Heat - Low - Stainless Steel	X	X	X	X				
Staged Gas Heat - High - Stainless Steel	X	X	X	X				
LP Conversion Kit					X	X	X	X
ELECTRIC HEAT (50A Only)								
Low Electric Heat	X	X	X	X				
High Electric Heat	X	X	X	X				
INDOOR AIR QUALITY								
2-inch Filters	X	X	X	X				
4-inch Filters	X	X	X	X				
Double Wall in the Airstream	X	X	X	X				
ECONOMIZER								
Manual Outside Air Self-Closing Damper	X	X	X	X				
Modulating Ultra Low-Leak Economizer	X	X	X	X				
Outdoor or Return Humidity Sensor (Enthalpy)					X	X	X	X
EXHAUST AIR CONTROL								
Barometric Relief	X	X			X	X	X	X
Non-Modulating Power Exhaust	X				X	X	X	X
Staged Power Exhaust	X	X			X	X	X	X
Building Pressure Control Board (ECB2)					X		X	
Building Pressure Control Sensor					X	X	X	X
CONDENSER AND EVAPORATOR COIL OPTIONS								
Al/Cu Condenser and Evaporator	X	X	X	X				
Al/Cu Pre-Coat Condenser and Al/Cu Evaporator	X	X	X	X				
Al/Cu E-Coat Condenser and Al/Cu Evaporator	X	X	X	X				
Al/Cu E-Coat Condenser and Al/Cu E-Coat Evaporator	X	X	X	X				
Cu/Cu Condenser and Al/Cu Evaporator	X	X	X	X				
MCHX Condenser and Al/Cu Evaporator	X	X	X	X				
E-Coat MCHX Condenser and Al/Cu Evaporator	X	X	X	X				
E-Coat MCHX Condenser and Al/Cu E-Coat Evaporator	X	X	X	X				
Hot Gas Bypass - Circuit A (includes ECB2)	X	X	X	X				
Condenser Coil Hail Guard Assembly					X	X	X	X
Galvanized Drain Pan	X	X	X	X				
Stainless Drain Pan	X	X	X	X				
Low Sound Condenser Fan	X	X	X	X				
Humidi-MiZer® Adaptive Dehumidification System	X	X	X	X				
CONTROLS								
Controls Expansion Module (CEM)	X	X	X	X	X	X	X	X
BACnet Communications	X	X	X	X				
System Pilot™ Interface					X	X	X	X
Touch Pilot™ Interface					X	X	X	X
Navigator™ Display					X	X	X	X
Return Air CO_2 Sensor	X	X	X	X	X	X	X	X
CO_2 Space Sensor					X	X	X	X
CO_2 Aspirator Box					X	X	X	X
Return Air Smoke Detector	X	X	X	X				
Filter Switch	X	X	X	X	X	X	X	X
Fan Status Switch (requires CEM)					X	X	X	X
T55 Thermostat					X	X	X	X
T56 Thermostat					X	X	X	X
T59 Sensor					X	X	X	X
Space Temperature Sensor with CO_2 Override					X	X	X	X
Space Temperature Sensor Setpoint and CO_2 Override					X	X	X	X
Thermostats (Temp System)					X		X	
Thermostats (Debonair®)					X		X	
Thermostats (Slimline)					X		X	
Thermostats (Corporate)					X		X	
Modbus Carrier Translator					X	X	X	X
LonWorks Carrier Translator					X	X	X	X

Options and accessories (cont)

ITEM	FACTORY-INSTALLED OPTIONS				FIELD-INSTALLED ACCESSORIES			
	A2,A6	A3,A7	A4,A8	A5,A9	A2,A6	A3,A7	A4,A8	A5,A9
POWER CIRCUIT								
GFI Convenience Outlet (powered)	X	X	X	X				
GFI Convenience Outlet (not powered)	X	X	X	X				
Power Terminal Block	X	X	X	X				
Non-Fused Disconnect	X	X	X	X				
INDOOR MOTOR OPTIONS								
Low HP	X	X	X	X				
Medium HP	X	X	X	X				
High HP	X	X	X	X				
Bypass on Indoor Fan Motor VFD		X		X				
PACKAGING								
Domestic	X	X	X	X				
Export	X	X	X	X				
MISCELLANEOUS OPTIONS								
Variable Capacity Compressor	X	X	X	X				
14-inch Roof Curb					X	X	X	X
Full-perimeter Roof Curb					X	X	X	X
Security Grille (60 Ton Unit Only)	X	X	X	X				
Low Outdoor Sound	X	X	X	X				
Low Compressor Sound					X	X	X	X
Low Ambient Control	X	X	X	X				

NOTES:
1. WEIGHTS INCLUDE ECONOMIZER (STD).
2. ⊕ CENTER OF GRAVITY.
3. FOR MULTIPLE UNIT APPLICATIONS SEE LITERATURE.
4. UNIT CLEARANCES:

   TOP OF UNITS: NO OVERHANG
   CONDENSER COIL: 4'-0" [1219]
   ECONOMIZER SIDE: 6'-0" [1829]
   HEAT SIDE: 4'-0" [1219]
   FILTER ACCESS SIDE: 10'-0" [3048]
   (FOR REMOVAL OF EVAPORATOR COIL)

5. FOR SMALLER SERVICE AND OPERATIONAL CLEARANCES, CONTACT CARRIER APPLICATION ENGINEERING DEPARTMENT.
6. BOTTOM DUCTS DESIGNED TO BE ATTACHED TO ACCESSORY ROOF CURB.) IF UNIT IS MOUNTED ON DUNNAGE, IT IS RECOMMENDED THE DUCTS MUST BE SUPPORTED BY CROSS BRACES AS DONE ON ACCESSORY ROOF CURB.
7. **DIMENSIONS ARE IN INCHES [MM].**

THIS DOCUMENT IS THE PROPERTY OF CARRIER CORPORATION AND IS DELIVERED UPON THE EXPRESS CONDITION THAT THE CONTENTS WILL NOT BE DISCLOSED OR USED WITHOUT CARRIER CORPORATION'S WRITTEN CONSENT.

SUBMISSION OF THESE DRAWINGS OR DOCUMENTS DOES NOT CONSTITUTE PART PERFORMANCE OR ACCEPTANCE OF CONTRACT.

UNIT SIZE	OPERATING WEIGHT *	CENTER OF GRAVITY		CORNER WEIGHTS (LBS)			
		A	B				
	LBS	FT/IN	FT/IN	1	2	3	4
48A2/A3/A6/A7 (D,W,S) 020	4689	8 - 0 7/8"	3 - 8 1/2"	949	989	1382	1370
48A2/A3/A6/A7 (E,N,T) 020	4769	8 - 0 1/4"	3 - 8 1/8"	980	1006	1388	1396
48A2/A3/A6/A7 (D,W,S) 025	4825	8 - 1 3/8"	3 - 8 1/4"	963	1015	1414	1434
48A2/A3/A6/A7 (E,N,T) 025	4905	8 - 0 7/8"	3 - 8"	994	1032	1419	1460
48A2/A3/A6/A7 (D,W,S) 027	4891	8 - 0 1/8"	3 - 7 3/4"	1029	1015	1414	1434
48A2/A3/A6/A7 (E,N,T) 027	4971	7 - 11 5/8"	3 - 7 3/8"	1060	1032	1419	1460
48A2/A3/A6/A7 (D,W,S) 030	4922	7 - 10"	3 - 8"	1058	1058	1403	1403
48A2/A3/A6/A7 (E,N,T) 030	5002	7 - 9 1/2"	3 - 7 3/4"	1090	1075	1408	1428
48A2/A3/A6/A7 (D,W,S) 035	5339	7 - 10 3/4"	3 - 5"	1211	1061	1430	1637
48A2/A3/A6/A7 (E,N,T) 035	5489	7 - 10 1/4"	3 - 4 3/4"	1266	1093	1453	1687

UNIT SIZE	OPERATING WEIGHT *	CENTER OF GRAVITY		CORNER WEIGHTS (KGS)			
		A	B				
	kg	MM	MM	1	2	3	4
48A2/A3/A6/A7 (D,W,S) 020	2127	2460	1130	430	448	627	621
48A2/A3/A6/A7 (E,N,T) 020	2163	2446	1122	445	456	630	633
48A2/A3/A6/A7 (D,W,S) 025	2189	2474	1125	437	460	641	651
48A2/A3/A6/A7 (E,N,T) 025	2225	2460	1117	451	468	644	662
48A2/A3/A6/A7 (D,W,S) 027	2219	2440	1110	467	460	641	651
48A2/A3/A6/A7 (E,N,T) 027	2255	2427	1102	481	468	644	662
48A2/A3/A6/A7 (D,W,S) 030	2233	2389	1118	480	480	636	636
48A2/A3/A6/A7 (E,N,T) 030	2269	2376	1110	495	488	639	648
48A2/A3/A6/A7 (D,W,S) 035	2422	2408	1049	549	481	649	743
48A2/A3/A6/A7 (E,N,T) 035	2494	2393	1035	574	498	658	765

* OPERATING WEIGHT INCLUDES LARGEST IFM, MCHX, MODULATING POWER EXHAUST (VAV), AND VFD (VAV).

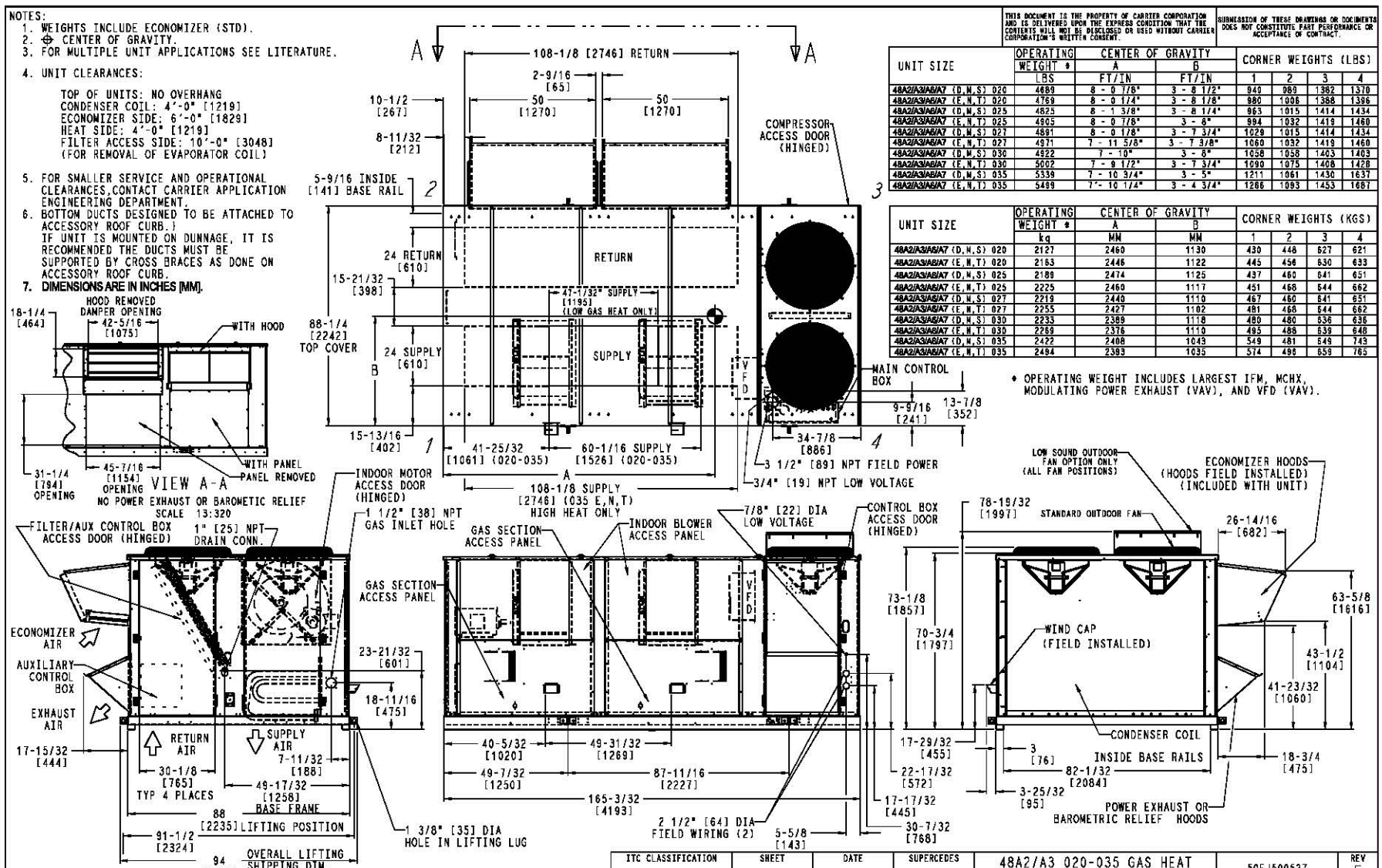

ITC CLASSIFICATION	SHEET	DATE	SUPERCEDES	48A2/A3 020-035 GAS HEAT (BOTH SUPPLY/RETURN UNITS)		REV
U.S. ECCN:EAR99	1 OF 1	02/20/17	04/15/13		50EJ500527	F

Base unit dimensions 48A2,A3,A6,A7040,050

NOTES:
1. Weights include economizer.
2. ⊕ center of gravity.
3. Unit clearances:
   Top of units: no overhang
   Condenser coil: 4' - 0" [1219]
   Economizer side: 6' - 0" [1829]
   Heat side: 4' - 0" [1219]
   Filter access side: 10' - 0" [3048] (for removal of evaporator coil)
4. Bottom ducts are designed to be attached to accessory roof curb. If unit is mounted on dunnage, it is recommended that the ducts be supported by cross braces as done on accessory roof curb.
5. Dimensions in [ ] are in millimeters. All other dimensions are in inches.

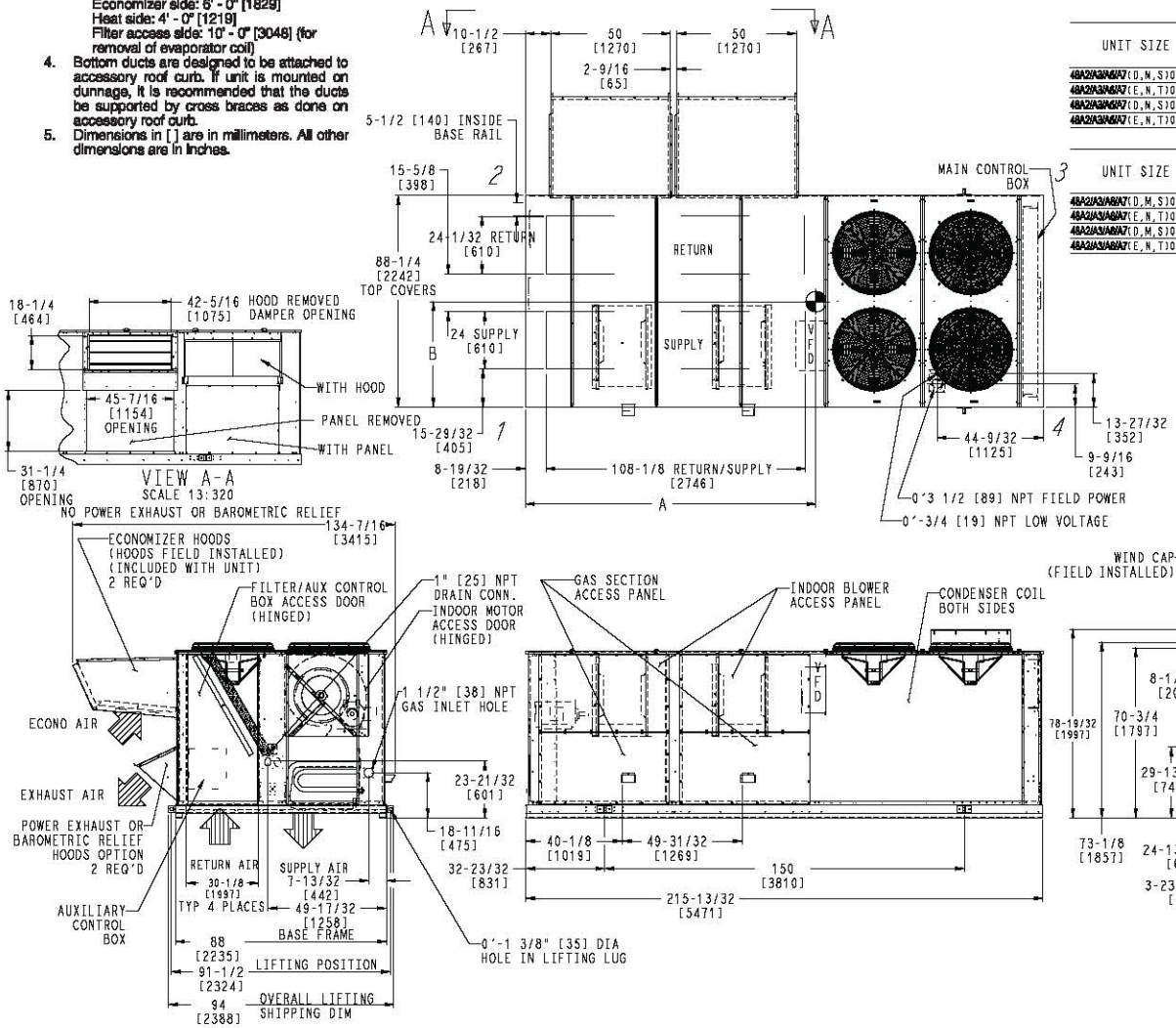

UNIT SIZE	OPERATING WEIGHT *	CENTER OF GRAVITY A	CENTER OF GRAVITY B	CORNER WEIGHT (LB) 1	2	3	4
	LB	FT/IN	FT/IN				
48A2/A3/A6/A7(D,N,SJ040	5769	10- 0 3/8"	3-5"	1355	1186	1502	1727
48A2/A3/A6/A7(E,N,TJ040	5928	9- 10 7/8"	3- 4 3/4"	1423	1229	1513	1764
48A2/A3/A6/A7(D,N,SJ050	5948	9- 10 1/8"	3- 5 1/4"	1419	1284	1527	1740
48A2/A3/A6/A7(E,N,TJ050	6109	9- 8 5/8"	3-5"	1489	1308	1536	1777

UNIT SIZE	OPERATING WEIGHT *	CENTER OF GRAVITY A	CENTER OF GRAVITY B	CORNER WEIGHT (KG) 1	2	3	4
	kg	MM	MM				
48A2/A3/A6/A7(D,M,SJ040	2617	3056	1041	615	538	681	783
48A2/A3/A6/A7(E,N,TJ040	2690	3018	1034	646	557	686	800
48A2/A3/A6/A7(D,M,SJ050	2699	2999	1048	644	573	693	789
48A2/A3/A6/A7(E,N,TJ050	2771	2962	1040	675	593	697	806

*Operating weight includes largest indoor fan motor, microchannel heat exchanger, modulating power exhaust (variable air volume units), and variable frequency drive (variable air volume units).

FOR CENTERS OF GRAVITY, OPERATING AND CORNER WEIGHTS, SEE PAGE 29.

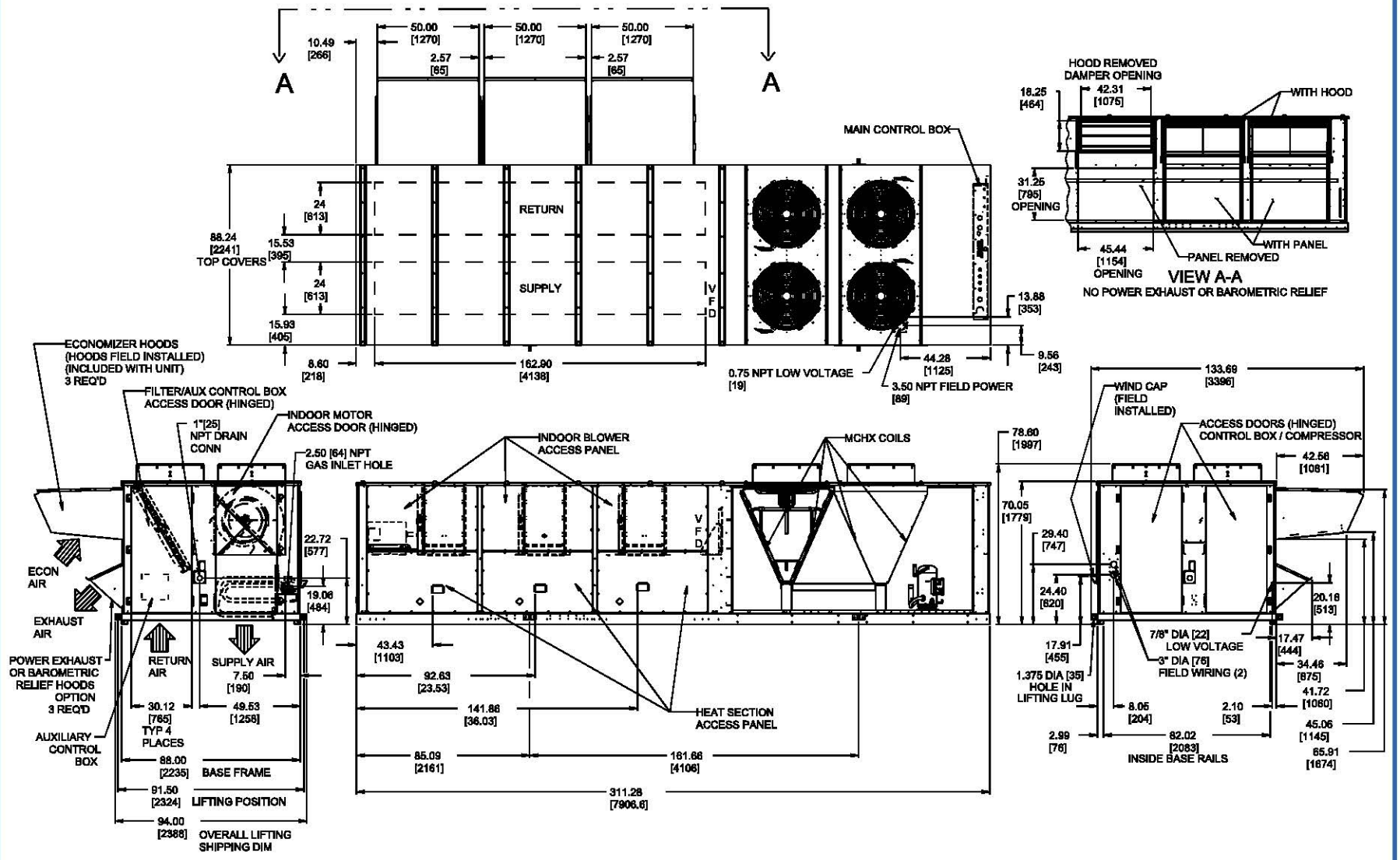

FOR CENTERS OF GRAVITY, OPERATING AND CORNER WEIGHTS, SEE PAGE 29.

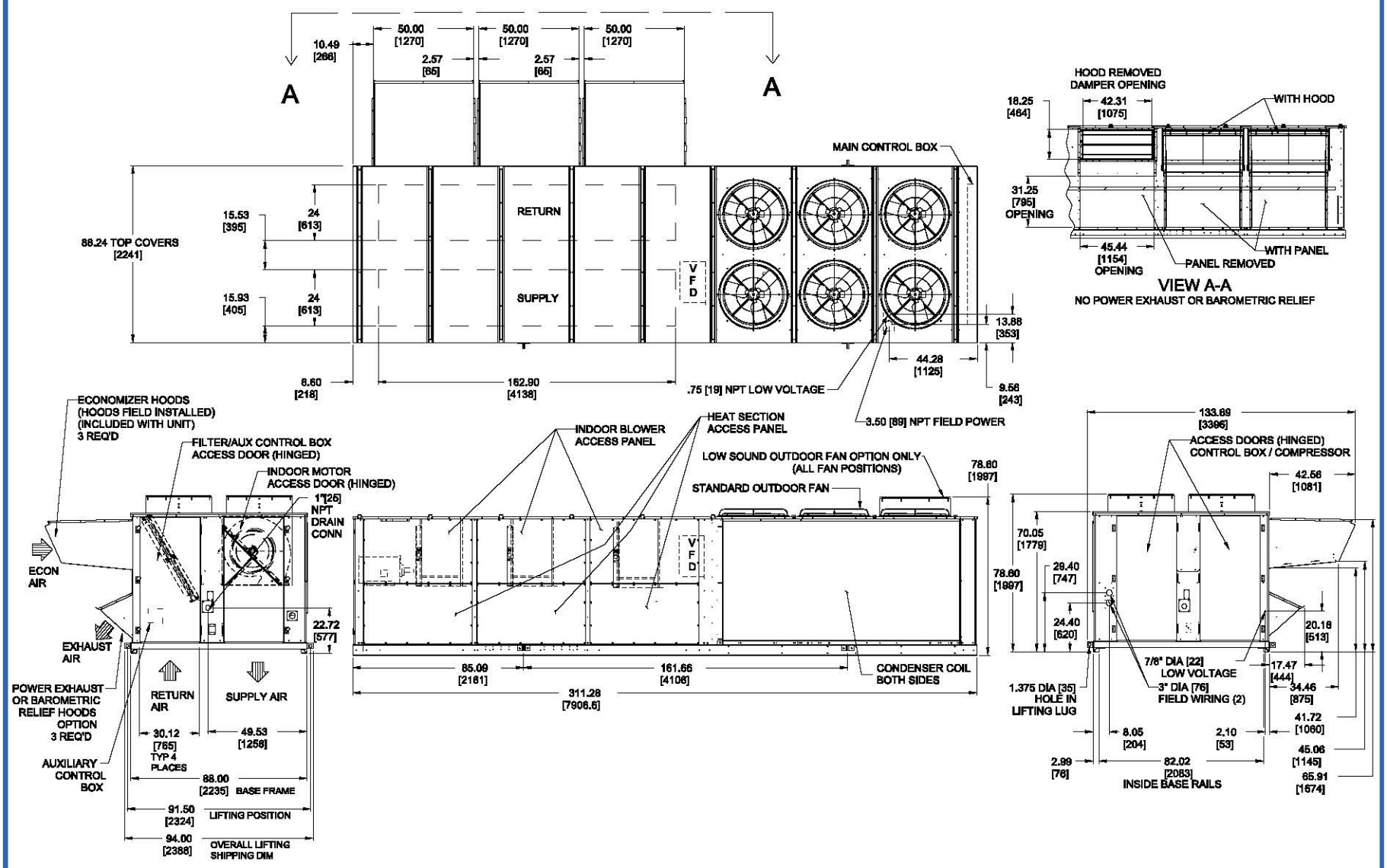

Base unit dimensions 48A4,A5,A8,A9020-035

NOTES:
1. WEIGHTS INCLUDE ECONOMIZER.
2. ⊕ CENTER OF GRAVITY.
3. FOR MULTIPLE UNIT APPLICATIONS SEE LITERATURE.
4. UNIT CLEARANCES:
   TOP OF UNITS: NO OVERHANG
   CONDENSER COIL: 4'-0" [1219]
   ECONOMIZER SIDE: 6'-0" [1829]
   HEAT SIDE: 4'-0" [1219]
   FILTER ACCESS SIDE: 10'-0" [3048]
   (FOR REMOVAL OF EVAPORATOR COIL)
5. FOR SMALLER SERVICE AND OPERATIONAL CLEARANCES, CONTACT CARRIER APPLICATION ENGINEERING DEPARTMENT.
6. **DIMENSIONS ARE IN INCHES [MM].**

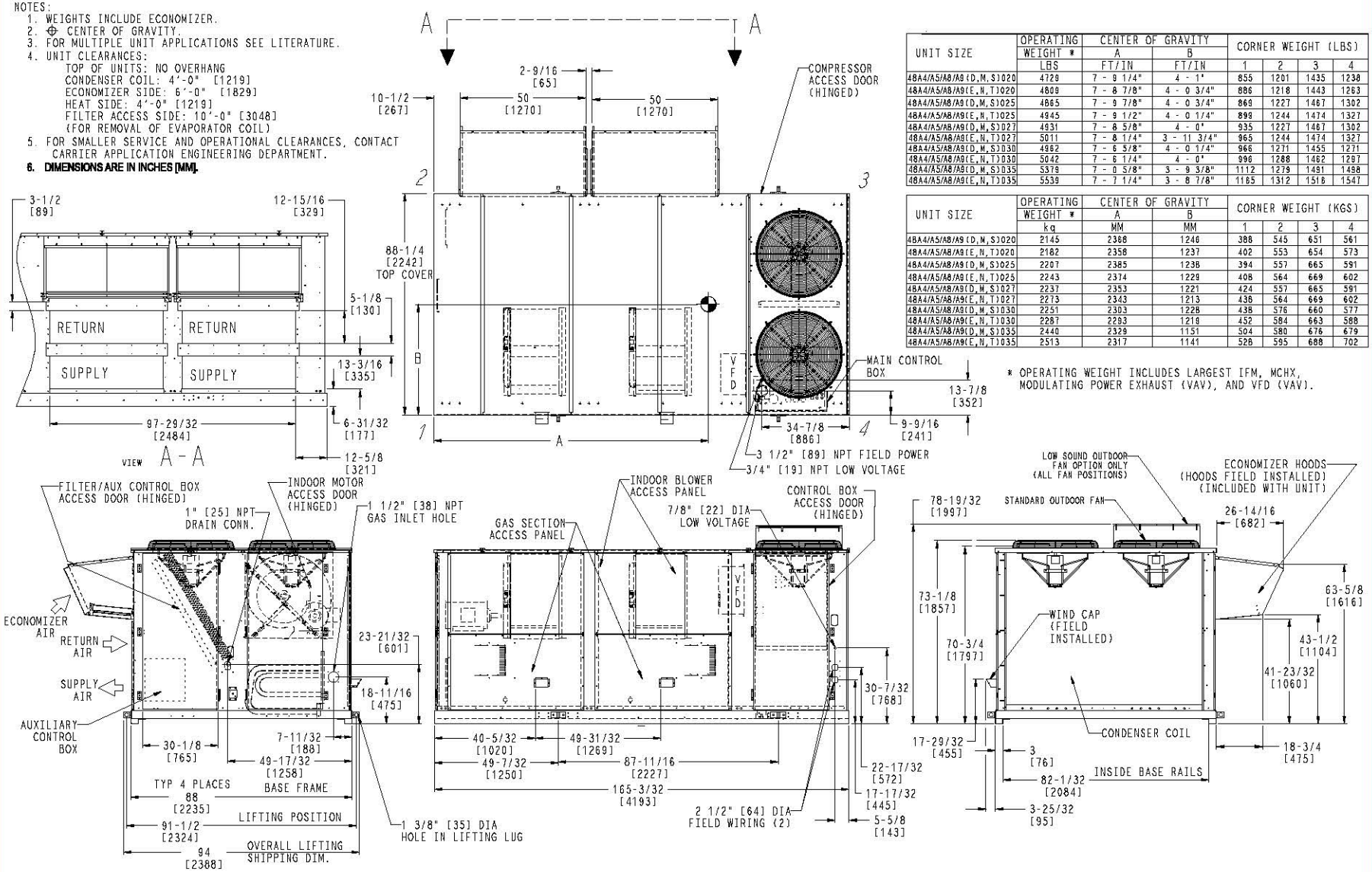

UNIT SIZE	OPERATING WEIGHT *	CENTER OF GRAVITY A	CENTER OF GRAVITY B	CORNER WEIGHT (LBS) 1	2	3	4
	LBS	FT/IN	FT/IN				
48A4/A5/A8/A9(D,M,S)020	4729	7 - 9 1/4"	4 - 1"	855	1201	1435	1238
48A4/A5/A8/A9(E,N,T)020	4809	7 - 8 7/8"	4 - 0 3/4"	886	1218	1443	1263
48A4/A5/A8/A9(D,M,S)025	4865	7 - 9 7/8"	4 - 0 3/4"	869	1227	1467	1302
48A4/A5/A8/A9(E,N,T)025	4945	7 - 9 1/2"	4 - 0 1/4"	899	1244	1474	1327
48A4/A5/A8/A9(D,M,S)027	4931	7 - 8 5/8"	4 - 0"	935	1227	1467	1302
48A4/A5/A8/A9(E,N,T)027	5011	7 - 8 1/4"	3 - 11 3/4"	965	1244	1474	1327
48A4/A5/A8/A9(D,M,S)030	4962	7 - 6 5/8"	4 - 0 1/4"	966	1271	1455	1271
48A4/A5/A8/A9(E,N,T)030	5042	7 - 6 1/4"	4 - 0"	996	1288	1462	1297
48A4/A5/A8/A9(D,M,S)035	5378	7 - 0 5/8"	3 - 9 3/8"	1112	1279	1491	1498
48A4/A5/A8/A9(E,N,T)035	5539	7 - 7 1/4"	3 - 8 7/8"	1165	1312	1516	1547

UNIT SIZE	OPERATING WEIGHT *	CENTER OF GRAVITY A	CENTER OF GRAVITY B	CORNER WEIGHT (KGS) 1	2	3	4
	kg	MM	MM				
48A4/A5/A8/A9(D,M,S)020	2145	2368	1246	388	545	651	561
48A4/A5/A8/A9(E,N,T)020	2182	2358	1237	402	553	654	573
48A4/A5/A8/A9(D,M,S)025	2207	2385	1238	394	557	665	591
48A4/A5/A8/A9(E,N,T)025	2243	2374	1229	408	564	669	602
48A4/A5/A8/A9(D,M,S)027	2237	2353	1221	424	557	665	591
48A4/A5/A8/A9(E,N,T)027	2273	2343	1213	436	564	669	602
48A4/A5/A8/A9(D,M,S)030	2251	2303	1228	438	576	660	577
48A4/A5/A8/A9(E,N,T)030	2287	2293	1218	452	584	663	588
48A4/A5/A8/A9(D,M,S)035	2440	2329	1151	504	580	676	679
48A4/A5/A8/A9(E,N,T)035	2513	2317	1141	528	595	688	702

* OPERATING WEIGHT INCLUDES LARGEST IFM, MCHX, MODULATING POWER EXHAUST (VAV), AND VFD (VAV).

NOTES:
1. Weights include economizer.
2. ◉ center of gravity
3. Unit clearances:
   Top of units: no overhang
4. Condenser coil: 4' - 0" [1219]
   Economizer side: 6' - 0" [1829]
   Heat side: 4' - 0" [1219]
   Filter access side: 10' - 0" [3048] (for removal of evaporator coil)
5. For smaller service and operational clearances, contact Carrier application engineering department.
6. Bottom ducts are designed to be attached to accessory roof curb. If unit is mounted on dunnage, it is recommended that the ducts be supported by cross braces as done on accessory roof curb.
7. Dimensions in [ ] are in millimeters. All other dimensions are in inches.

UNIT SIZE	OPERATING WEIGHT *	CENTER OF GRAVITY A	CENTER OF GRAVITY B	CORNER WEIGHT (LB)			
	LB	FT/IN	FT/IN	1	2	3	4
48A4/A5/A8/A9K,D,N,S1040	5809	9 - 7 1/8"	3 - 9"	1254	1445	1522	1588
48A4/A5/A8/A9K,E,N,T1040	5969	9 - 5 7/8"	3 - 8 1/2"	1320	1488	1535	1627
48A4/A5/A8/A9K,D,N,S1050	5989	9 - 4 7/8"	3 - 8 1/8"	1320	1524	1544	1601
48A4/A5/A8/A9K,E,N,T1050	6149	9 - 3 3/4"	3 - 8 5/8"	1386	1567	1555	1639

UNIT SIZE	OPERATING WEIGHT *	CENTER OF GRAVITY A	CENTER OF GRAVITY B	CORNER WEIGHT (KG)			
	kg	MM	MM	1	2	3	4
48A4/A5/A8/A9K,D,N,S1040	2635	2924	1142	569	656	690	720
48A4/A5/A8/A9K,E,N,T1040	2708	2893	1132	599	675	696	738
48A4/A5/A8/A9K,D,N,S1050	2717	2868	1145	599	691	700	726
48A4/A5/A8/A9K,E,N,T1050	2789	2837	1135	630	711	706	744

*Operating weight includes largest indoor fan motor, microchannel heat exchanger, modulating power exhaust (variable air volume units), and variable frequency drive (variable air volume units).

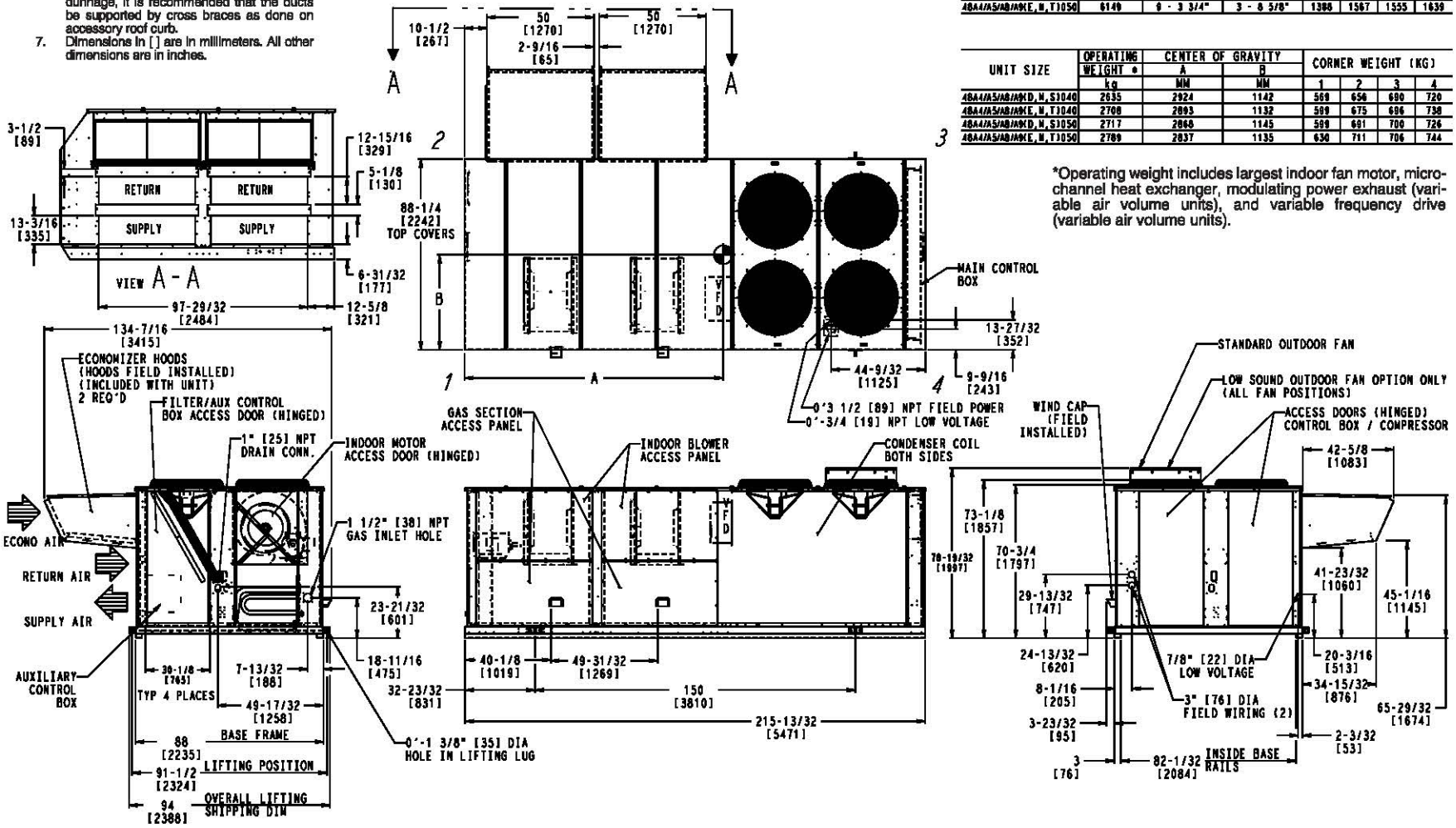

FOR CENTERS OF GRAVITY, OPERATING AND CORNER WEIGHTS, SEE PAGE 29.

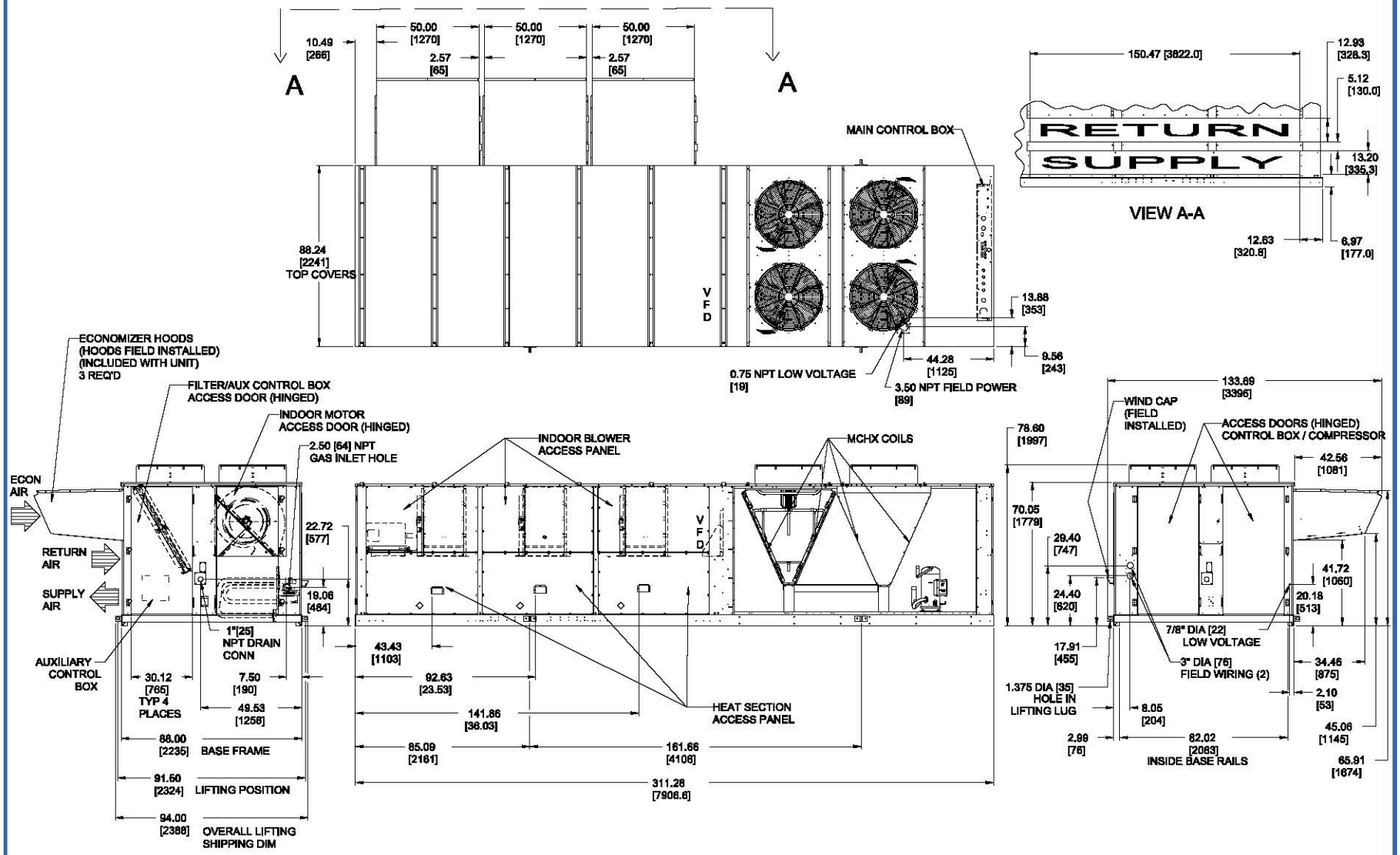

FOR CENTERS OF GRAVITY, OPERATING AND CORNER WEIGHTS, SEE PAGE 29.

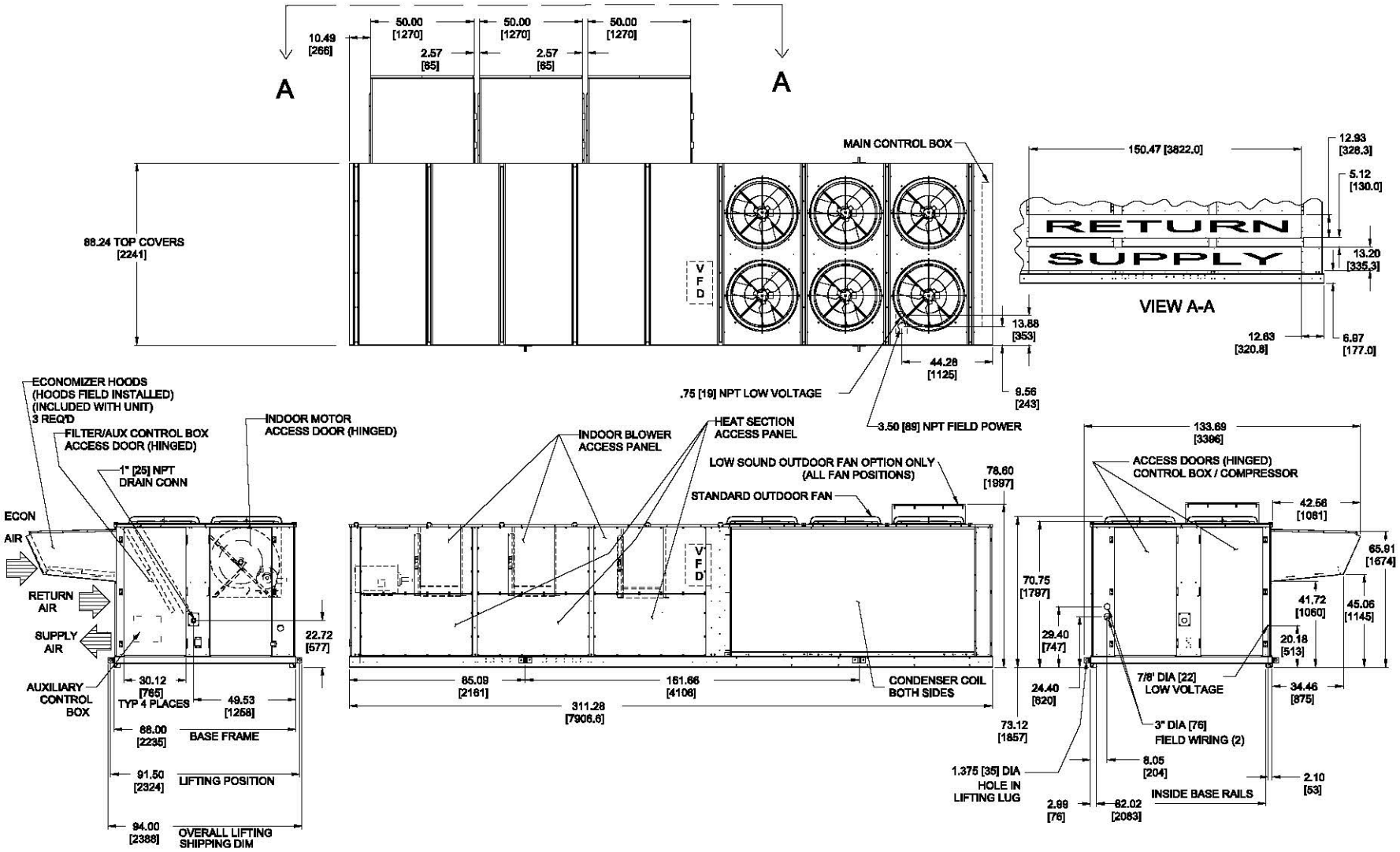

CENTER OF GRAVITY AND WEIGHTS — 48A060

NOTES:
1. WEIGHTS INCLUDE ECONOMIZER OR OUTDOOR AIR DAMPER.
2. ⊕ CENTER OF GRAVITY.
3. FOR MULTIPLE UNIT APPLICATIONS SEE LITERATURE.

4. UNIT CLEARANCES:
   TOP OF UNITS: NO OVERHANG
   CU TUBE CONDENSER COIL: 4'-0" [1219]
   HEAT SIDE: 4'-0" [1219]
   FILTER ACCESS SIDE: 15'-0" [4572]
   (FOR REMOVAL OF EVAPORATOR COIL)
   ECONOMIZER SIDE: 6'-0" [1829] (FOR TUBE CONDENSER COILS)
   8'-0" [2438] (FOR REMOVAL OF MCHX CONDENSER COILS)

5. FOR SMALLER SERVICE AND OPERATIONAL CLEARANCES, CONTACT CARRIER APPLICATION ENGINEERING DEPARTMENT.
6. BOTTOM DUCTS DESIGNED TO BE ATTACHED TO ACCESSORY ROOF CURB. IF UNIT IS MOUNTED ON DUNNAGE, IT IS RECOMMENDED THE DUCTS MUST BE SUPPORTED BY CROSS BRACES AS DONE ON ACCESSORY ROOF CURB.
7. BASE UNIT WEIGHTS INCLUDE OUTDOOR AIR HOODS, AND FILTERS (INDOOR FAN MOTOR IS NOT INCLUDED). ADD INDOOR MOTOR, FIOPS AND ACCESSORIES FOR TOTAL OPERATING WEIGHT.
8. VAV MOTOR WEIGHTS INCLUDE INDOOR MOTOR, VFD, VFD TRANSDUCER AND ASSOCIATED WIRING.
9. DIMENSIONS IN [ ] ARE IN MILLIMETERS, KILOGRAMS, OR KILOWATTS.
10. FOR SIDE-SUPPLY/RETURN APPLICATIONS, A SINGLE RETURN AND SUPPLY DUCTWORK CONNECTION IS RECOMMENDED FOR COVERING ALL THREE RETURN AND ALL THREE SUPPLY OPENINGS. THE ENTIRE AREA AROUND THE DUCT OPENINGS IS AVAILABLE FOR A 1.5" DUCT FLANGE ATTACHMENT.

BASE UNIT WEIGHTS (SEE NOTE 7) LB (Kg)	
	060
48A2D/A3D/A6D/A7D	7066 (3205)
48A2E/A3E/A6E/A7E	7306 (3314)
48A4D/A5D/A8D/A9D	7106 (3223)
48A4E/A5E/A8E/A9E	7356 (3337)
50A2/A3/A6/A7	6826 (3096)
50A4/A5/A8/A9	7041 (3194)
OPTIONS / ACCESSORIES (SEE NOTE 7)	
BAROMETRIC RELIEF	450 (204)
NON MOD. POWER EXHAUST	675 (306)
MOD. POWER EXHAUST	725 (329)
ELECTRIC HEAT	165 (75)
CU TU/AL FIN COND COIL	26 (12)
CU TU/CU FIN COND COIL	677 (307)

UNIT SIZE	OPERATING WEIGHT	CENTER OF GRAVITY A	CENTER OF GRAVITY B	CORNER WEIGHT (LB) 1	2	3	4
	LBS	FT/IN	FT/IN				
48A2/A3/A6/A7 (D,M,S) 060	8388	14 - 9 5/8"	3 - 5 1/4"	1909	1693	2243	2541
48A2/A3/A6/A7 (E,N,T) 060	8626	14 - 2 3/8"	3 - 3 1/4"	2159	1745	2100	2622
48A4/A/A6/A7 (D,M,S) 060	8426	14 - 1 5/8"	3 - 9 1/4"	1763	2072	2259	2333
48A4/A/A6/A7 (E,N,T) 060	8676	13 - 7 1/4"	3 - 7 1/4"	2000	2126	2134	2417
50A2/A3/A6/A7 060	8311	15 - 5"	3 - 7 3/8"	1710	1663	2433	2504
50A4/A/A6/A7 060	8526	14 - 8 1/2"	3 - 11 1/8"	1613	2078	2484	2351

UNIT SIZE	OPERATING WEIGHT	CENTER OF GRAVITY A	CENTER OF GRAVITY B	CORNER WEIGHT (kg) 1	2	3	4
	KG	MM	MM				
48A2/A3/A6/A7 (D,M,S) 060	3804	4511	1049	866	768	1017	1153
48A2/A3/A6/A7 (E,N,T) 060	3913	4329	996	979	792	953	1189
48A4/A/A6/A7 (D,M,S) 060	3822	4309	1149	800	940	1024	1058
48A4/A/A6/A7 (E,N,T) 060	3936	4147	1097	907	964	958	1096
50A2/A3/A6/A7 060	3770	4698	1102	776	755	1104	1136
50A4/A/A6/A7 060	3868	4484	1196	732	942	1127	1066

		CV MOTOR WEIGHTS LB (Kg)		VAV MOTOR WEIGHTS LB (Kg) (SEE NOTE 8)	
		HIGH EFFC'Y IFM	PREMIUM EFFC'Y IFM	HIGH EFFC'Y IFM	PREMIUM EFFC'Y IFM
25 HP (18.65 kW)	230/460	240 (109)	309 (140)	375 (170)	444 (201)
	575	240 (109)	319 (145)	375 (170)	454 (206)
30 HP (22.38 kW)	230/460	283 (128)	355 (161)	418 (190)	490 (222)
	575	283 (128)	359 (163)	418 (190)	494 (224)
40 HP (29.84 kW)	230/460	372 (169)	415 (188)	507 (230)	550 (249)
	575	372 (169)	410 (186)	507 (230)	545 (247)

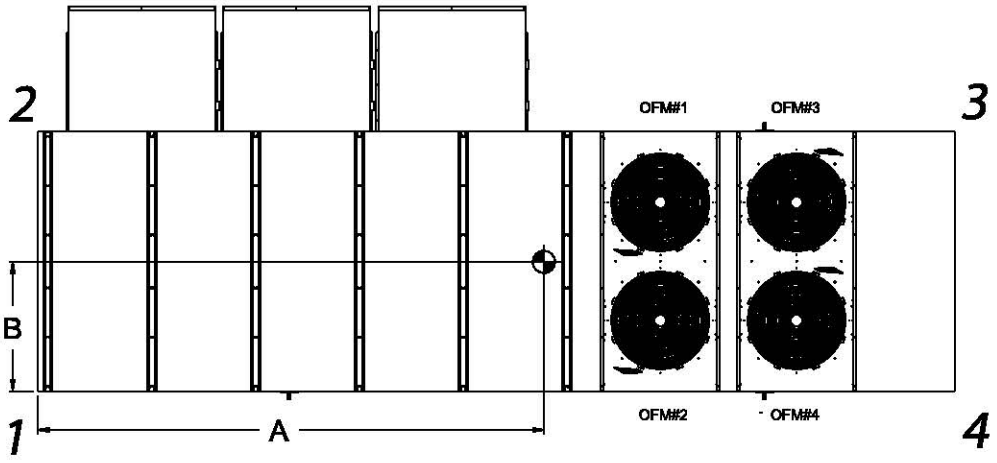

Base unit dimensions 50A2,A3,A6,A7020-035

NOTES:
1. WEIGHTS INCLUDE ECONOMIZER.
2. ⊕ CENTER OF GRAVITY.
3. FOR MULTIPLE UNIT APPLICATIONS SEE LITERATURE.
4. UNIT CLEARANCES:
   TOP OF UNITS: NO OVERHANG
   CONDENSER COIL: 4'-0"[1219]
   ECONOMIZER SIDE: 6'-0"[1829]
   HEAT SIDE: 4'-0"[1219]
   FILTER ACCESS SIDE: 10'-0"[3048] (FOR REMOVAL OF EVAPORATOR COIL)
5. FOR SMALLER SERVICE AND OPERATIONAL CLEARANCES, CONTACT CARRIER APPLICATION ENGINEERING DEPARTMENT.
6. BOTTOM DUCTS DESIGNED TO BE ATTACHED TO ACCESSORY ROOF CURB IF UNIT IS MOUNTED ON DUNNAGE, IT IS RECOMENDED THE DUCTS MUST BE SUPPORTED BY CROSS BRACES AS DONE ON ACCESSORY ROOF CURB.
7. DIMENSIONS IN [ ] ARE IN MILLIMETERS.

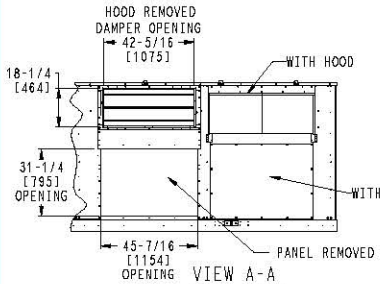

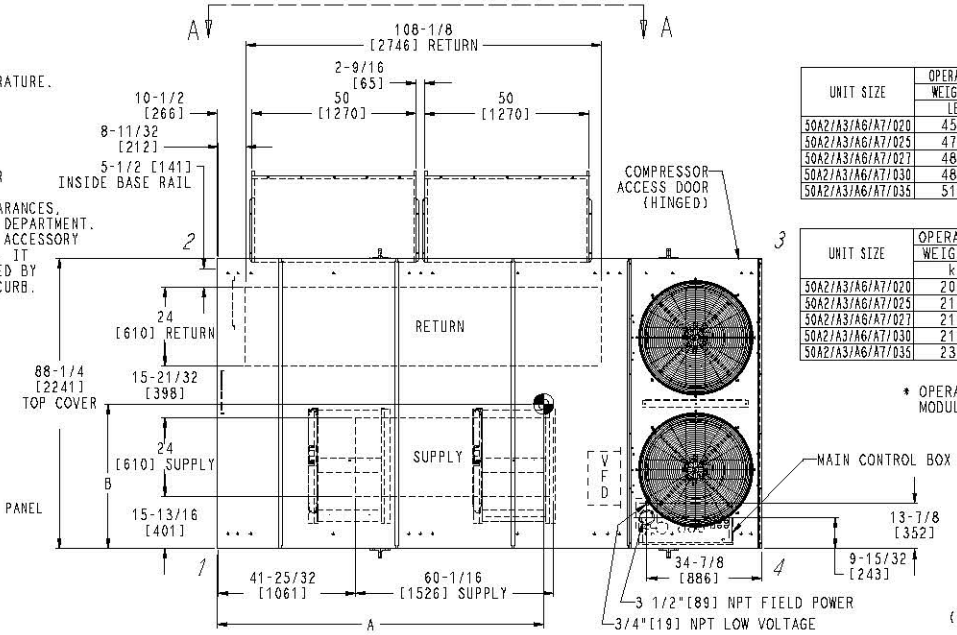

UNIT SIZE	OPERATING WEIGHT *	CENTER OF GRAVITY		CORNER WEIGHT (LBS)			
		A	B				
	LBS	FT/IN	FT/IN	1	2	3	4
50A2/A3/A6/A7/D20	4599	8-2"	3-8 7/8"	905	963	1385	1347
50A2/A3/A6/A7/D25	4735	8-2 1/2"	3-8 3/4"	918	989	1416	1411
50A2/A3/A6/A7/D27	4801	8-1 1/8"	3-8 1/8"	984	989	1416	1411
50A2/A3/A6/A7/D30	4832	7-11 1/8"	3-8 3/8"	1013	1032	1407	1380
50A2/A3/A6/A7/D35	5134	7-11 7/8"	3-5 1/2"	1137	1014	1405	1579

UNIT SIZE	OPERATING WEIGHT *	CENTER OF GRAVITY		CORNER WEIGHT (KGS)			
		A	B				
	kg	MM	MM	1	2	3	4
50A2/A3/A6/A7/D20	2086	2489	1141	410	437	628	611
50A2/A3/A6/A7/D25	2148	2503	1135	417	449	643	640
50A2/A3/A6/A7/D27	2178	2468	1120	447	449	643	640
50A2/A3/A6/A7/D30	2192	2417	1128	460	468	638	626
50A2/A3/A6/A7/D35	2329	2435	1053	516	460	637	716

* OPERATING WEIGHT INCLUDES LARGEST IFM, MCHX, MODULATING POWER EXHAUST (VAV), AND VFD (VAV).

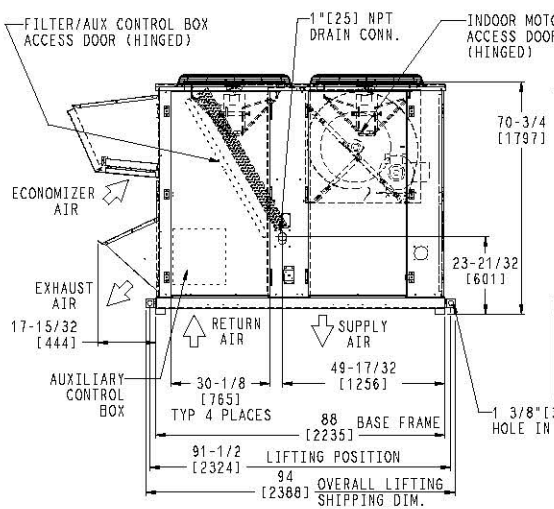

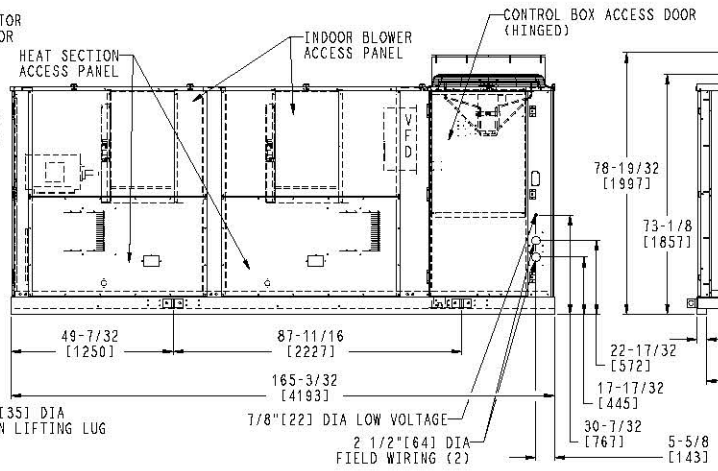

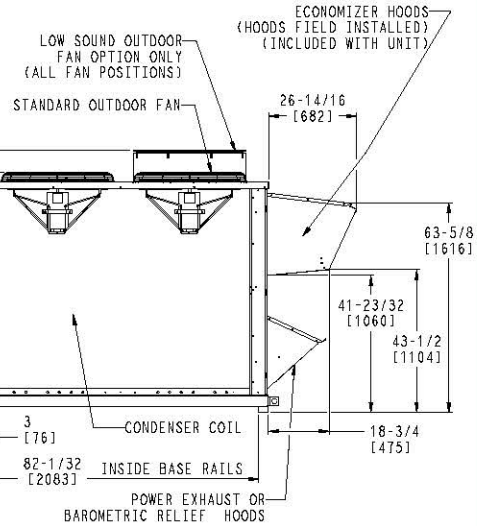

Base unit dimensions 50A2,A3,A6,A7040,050

NOTES:
1. Weights include economizer.
2. ⊕ center of gravity.
3. Unit clearances: Top of units: no overhang
   Condenser coil: 4' - 0" [1219]
   Economizer side: 6' - 0" [1829]
   Heat side: 4' - 0" [1219]
   Filter access side: 10' - 0" [3048] (for removal of evaporator coil)
4. For smaller service and operational clearances, contact Carrier application engineering department.
5. Bottom ducts are designed to be attached to accessory roof curb. If unit is mounted on dunnage, it is recommended that the ducts be supported by cross braces as done on accessory roof curb.
6. Dimensions in [ ] are in millimeters. All other dimensions are in inches.

UNIT SIZE	OPERATING WEIGHT *	CENTER OF GRAVITY A	CENTER OF GRAVITY B	CORNER WEIGHT (LB) 1	2	3	4
	LB	FT/IN	FT/IN				
50A2/A3/A6/A7/040	5564	10 - 1 3/4"	3 - 5 3/8"	1276	1137	1481	1671
50A2/A3/A6/A7/050	5744	11 - 1/2"	3 - 5 3/4"	1338	1214	1509	1684

UNIT SIZE	OPERATING WEIGHT *	CENTER OF GRAVITY A	CENTER OF GRAVITY B	CORNER WEIGHT (KG) 1	2	3	4
	kg	MM	MM				
50A2/A3/A6/A7/040	2524	3093	1052	579	516	672	758
50A2/A3/A6/A7/050	2608	3035	1059	607	551	684	764

*Operating weight includes largest indoor fan motor, microchannel heat exchanger, modulating power exhaust (variable air volume units), and variable frequency drive (variable air volume units).

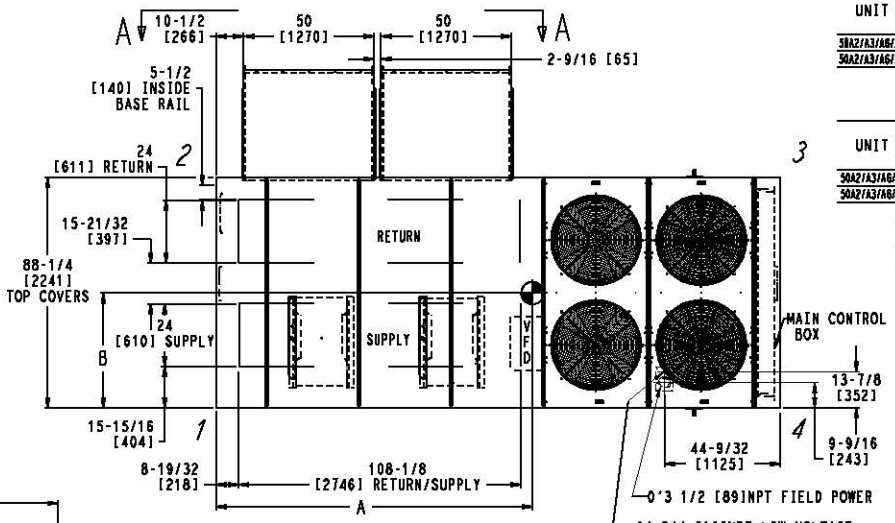

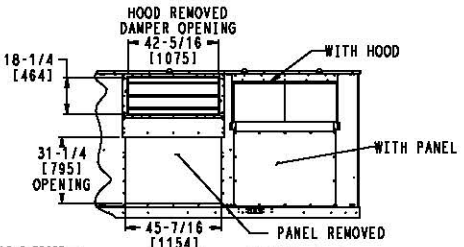

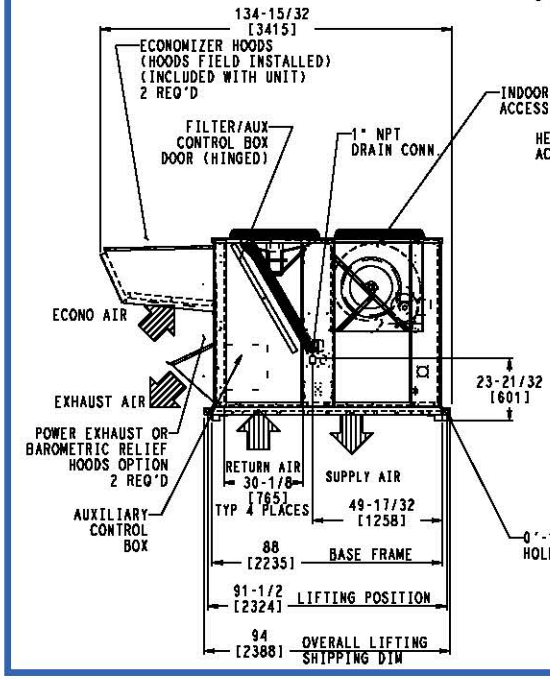

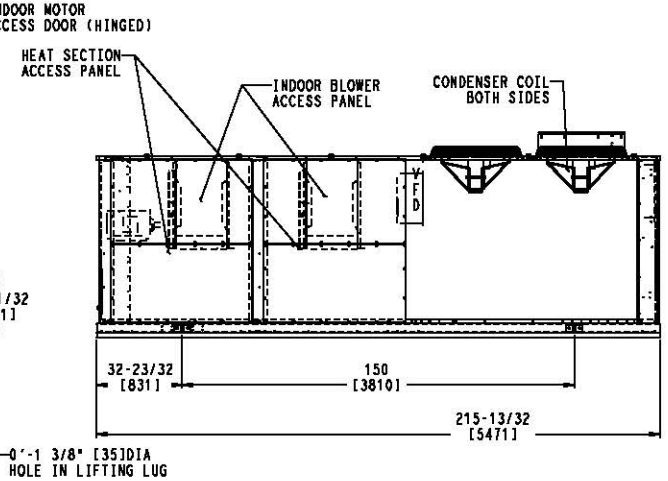

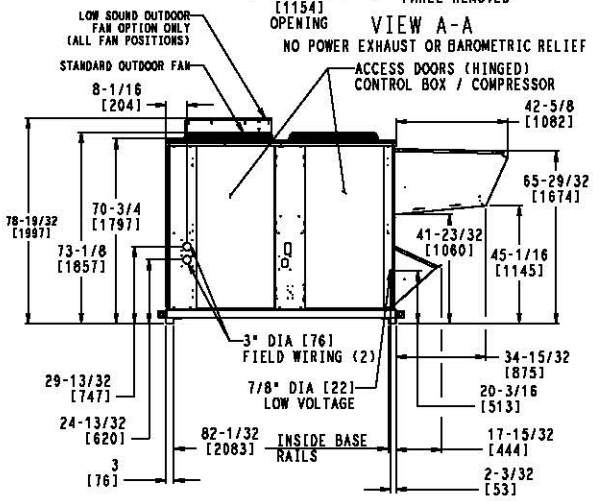

FOR CENTERS OF GRAVITY, OPERATING AND CORNER WEIGHTS, SEE PAGE 38

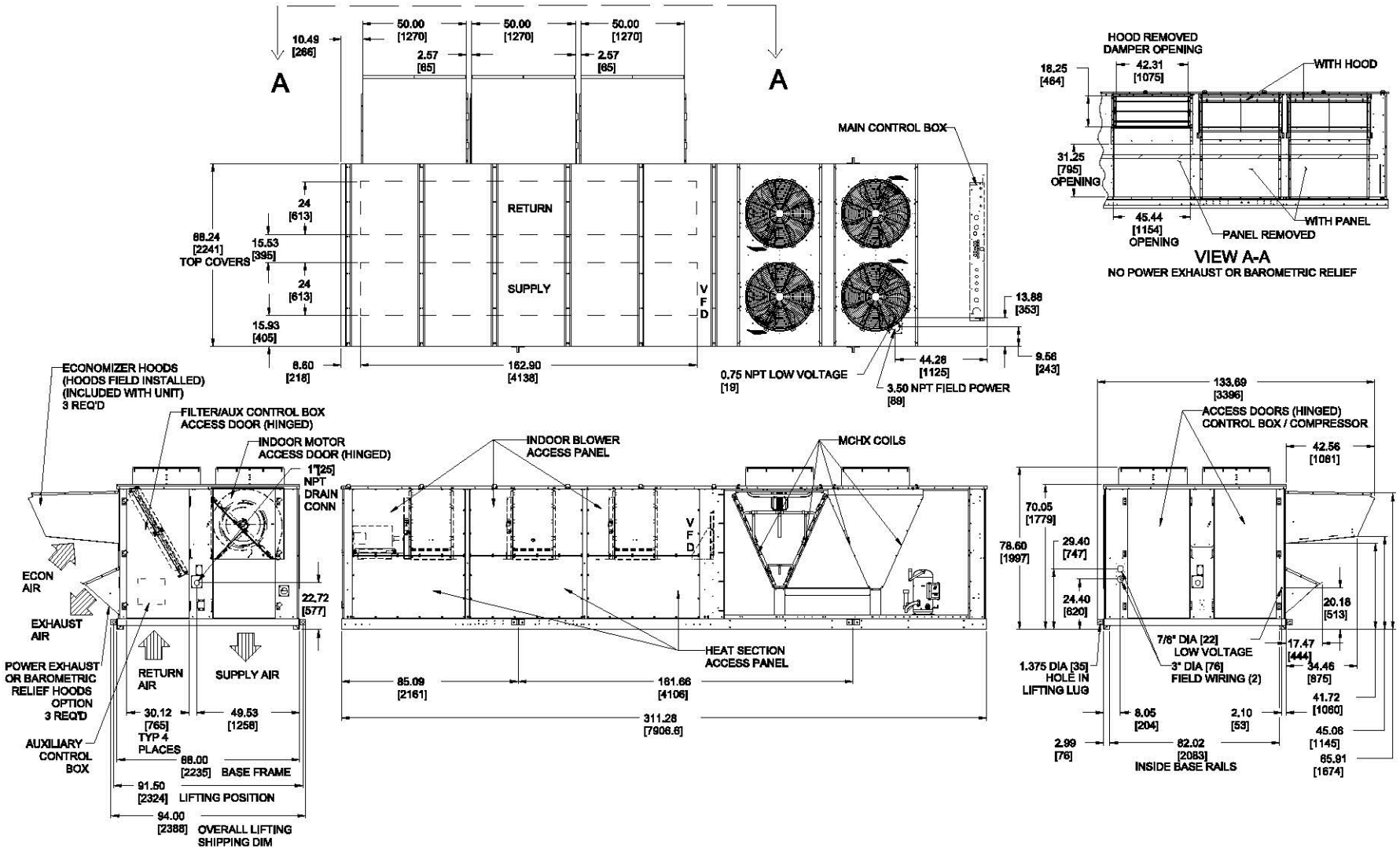

FOR CENTERS OF GRAVITY, OPERATING AND CORNER WEIGHTS, SEE PAGE 38

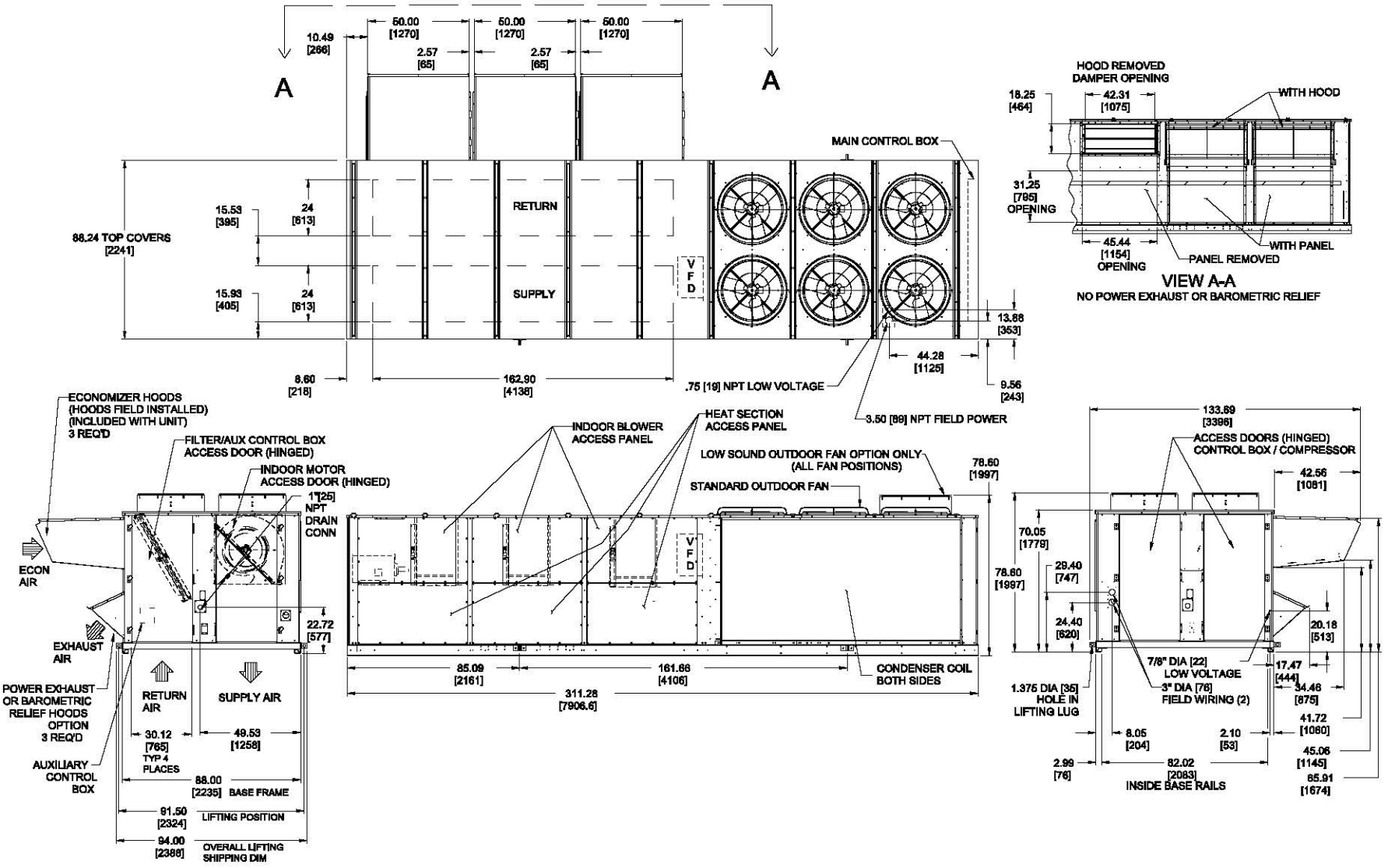

NOTES:
1. WEIGHTS INCLUDE ECONOMIZER.
2. ⊕ CENTER OF GRAVITY.
3. FOR MULTIPLE UNIT APPLICATION SEE LITERATURE.
4. UNIT CLEARANCES:
   TOP OF UNITS: NO OVERHANG
   CONDENSER COIL: 4'-0"[1219]
   ECONOMIZER SIDE: 6'-0"[1829]
   HEAT SIDE: 4'-0"[1219]
   FILTER ACCESS SIDE: 10'-0"[3048] (FOR REMOVAL OF EVAPORATOR COIL)
5. FOR SMALLER SERVICE AND OPERATIONAL CLEARANCES, CONTACT CARRIER APPLICATION ENGINEERING DEPARTMENT.
6. DIMENSIONS IN [ ] ARE IN MILLIMETERS.

* OPERATING WEIGHT INCLUDES LARGEST IFM, NCHX, MODULATING POWER EXHAUST (VAV), AND VFD (VAV).

UNIT SIZE	OPERATING WEIGHT *	CENTER OF GRAVITY A	CENTER OF GRAVITY B	CORNER WEIGHT (LBS) 1	2	3	4
	LBS	FT/IN	FT/IN				
50A4/A5/A8/A9020	4677	7 - 10 1/4"	4 - 1 1/2"	821	1184	1446	1225
50A4/A5/A8/A9025	4813	7 - 10 7/8"	4 - 1 1/4"	835	1210	1478	1290
50A4/A5/A8/A9027	4879	7 - 9 5/8"	4 - 0 1/2"	901	1210	1478	1290
50A4/A5/A8/A9030	4910	7 - 7 5/8"	4 - 0 3/4"	931	1253	1467	1259
50A4/A5/A8/A9035	5327	7 - 8 5/8"	3 - 9 3/4"	1073	1263	1506	1486

UNIT SIZE	OPERATING WEIGHT *	CENTER OF GRAVITY A	CENTER OF GRAVITY B	CORNER WEIGHT (KGS) 1	2	3	4
	kg	MM	MM				
50A4/A5/A8/A9020	2122	2394	1257	373	537	656	556
50A4/A5/A8/A9025	2183	2410	1248	379	549	670	585
50A4/A5/A8/A9027	2213	2377	1232	409	549	670	585
50A4/A5/A8/A9030	2227	2327	1238	422	568	666	571
50A4/A5/A8/A9035	2416	2353	1161	487	573	683	674

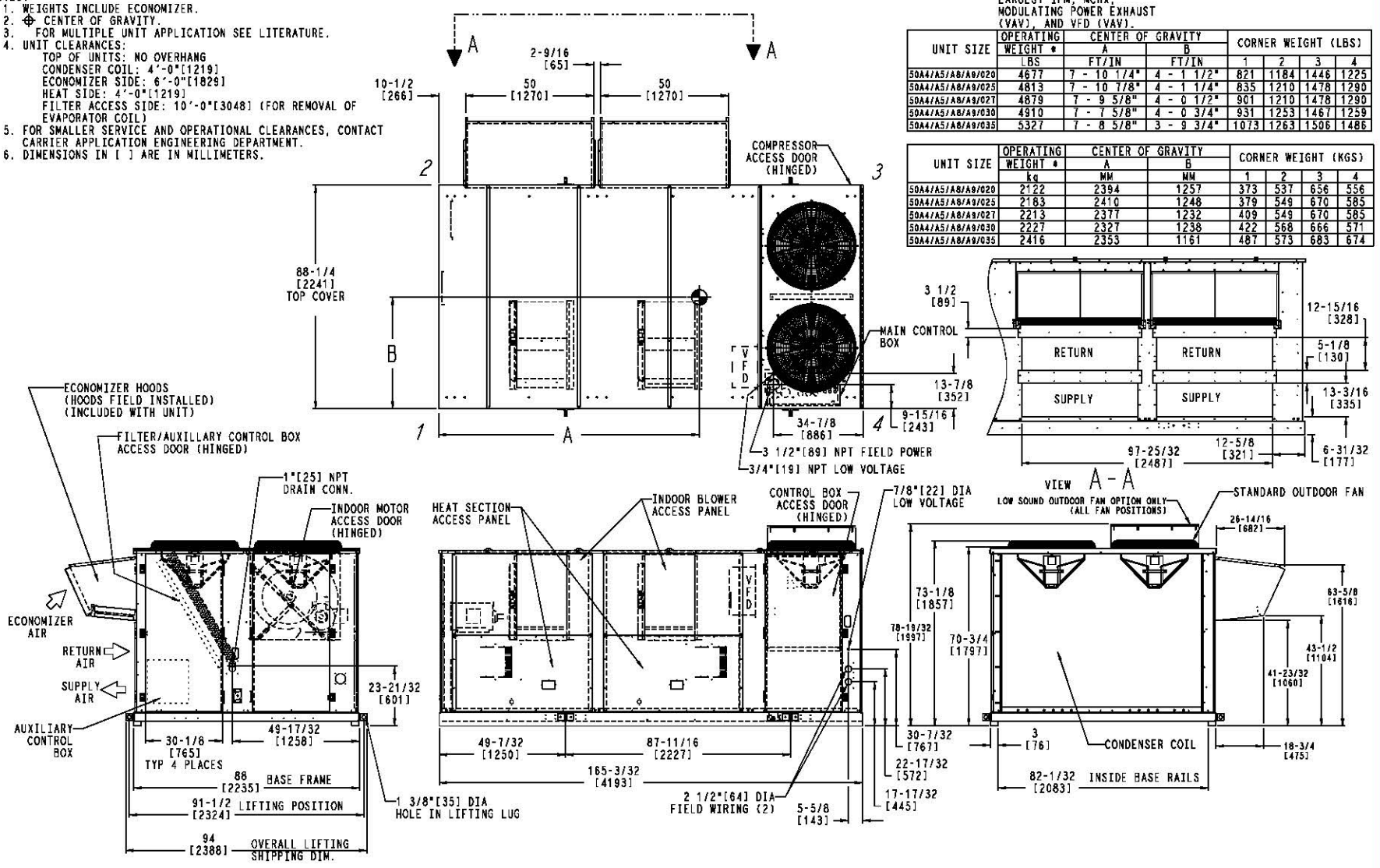

NOTES:
1. Weights include economizer.
2. ⊕ center of gravity.
3. Unit clearances:
   Top of units: no overhang
   Condenser coil: 4' - 0" [1219]
   Economizer side: 6' - 0" [1829]
   Heat side: 4' - 0" [1219]
   Filter access side: 10' - 0" [3048] (for removal of evaporator coil)
4. For smaller service and operational clearances, contact Carrier application engineering department.
5. Dimensions in [ ] are in millimeters. All other dimensions are in inches.

UNIT SIZE	OPERATING WEIGHT *	CENTER OF GRAVITY		CORNER WEIGHT (LB)			
		A	B				
	LB	FT/IN	FT/IN	1	2	3	4
50A4/A5/A8/A9/040	5757	9-8 1/2"	3-9 3/8"	1211	1428	1540	1578
50A4/A5/A8/A9/050	5937	9-6 1/4"	3-9 1/2"	1276	1505	1566	1591

UNIT SIZE	OPERATING WEIGHT *	CENTER OF GRAVITY		CORNER WEIGHT (KG)			
		A	B				
	kg	MM	MM	1	2	3	4
50A4/A5/A8/A9/040	2612	2958	1152	549	648	699	715
50A4/A5/A8/A9/050	2693	2904	1156	579	683	710	722

*Operating weight includes largest indoor fan motor, microchannel heat exchanger, modulating power exhaust (variable air volume units), and variable frequency drive (variable air volume units).

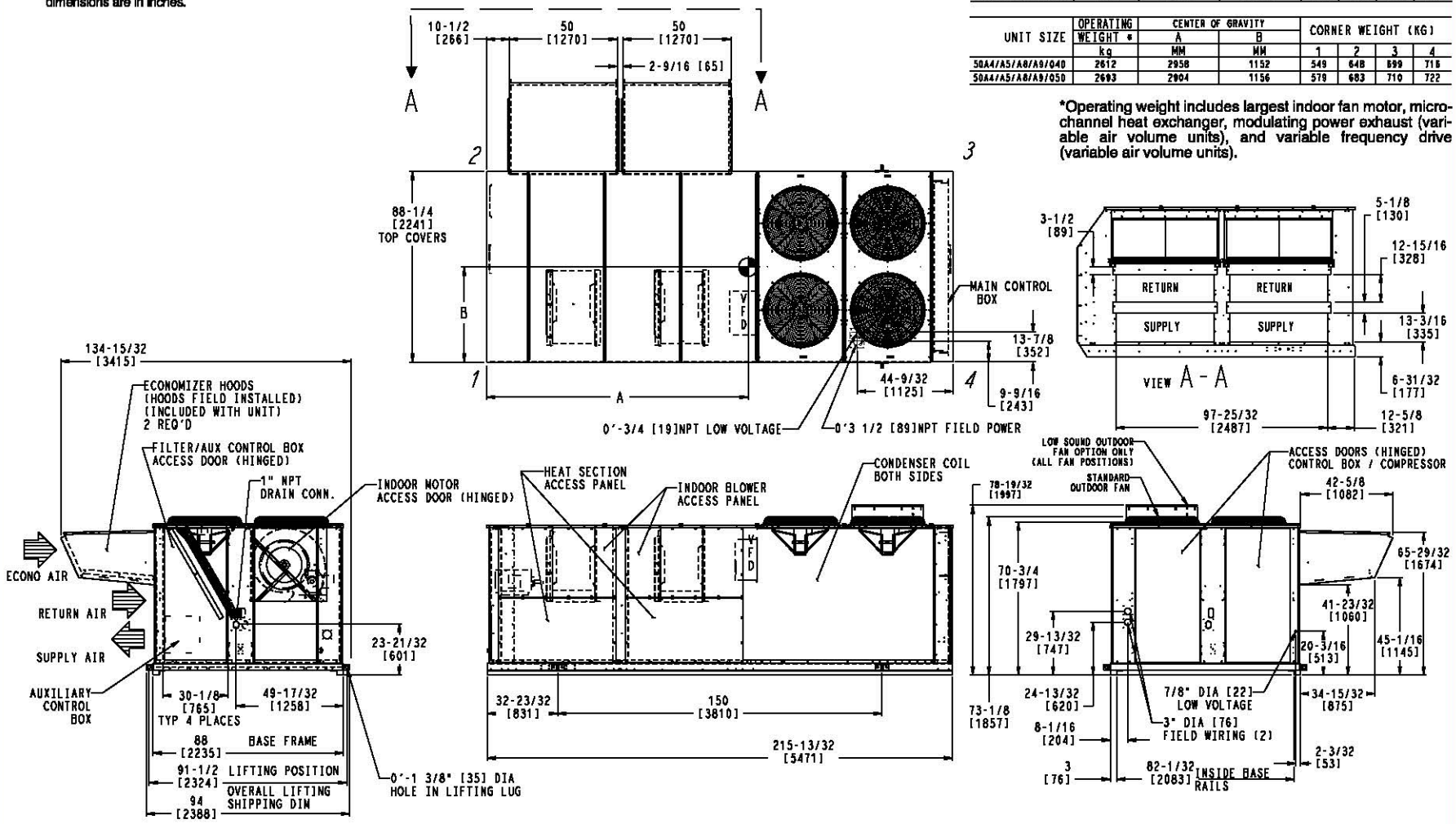

FOR CENTERS OF GRAVITY, OPERATING AND CORNER WEIGHTS, SEE PAGE 38

Base unit dimensions 50A4,A5,A8,A9060 MCHX

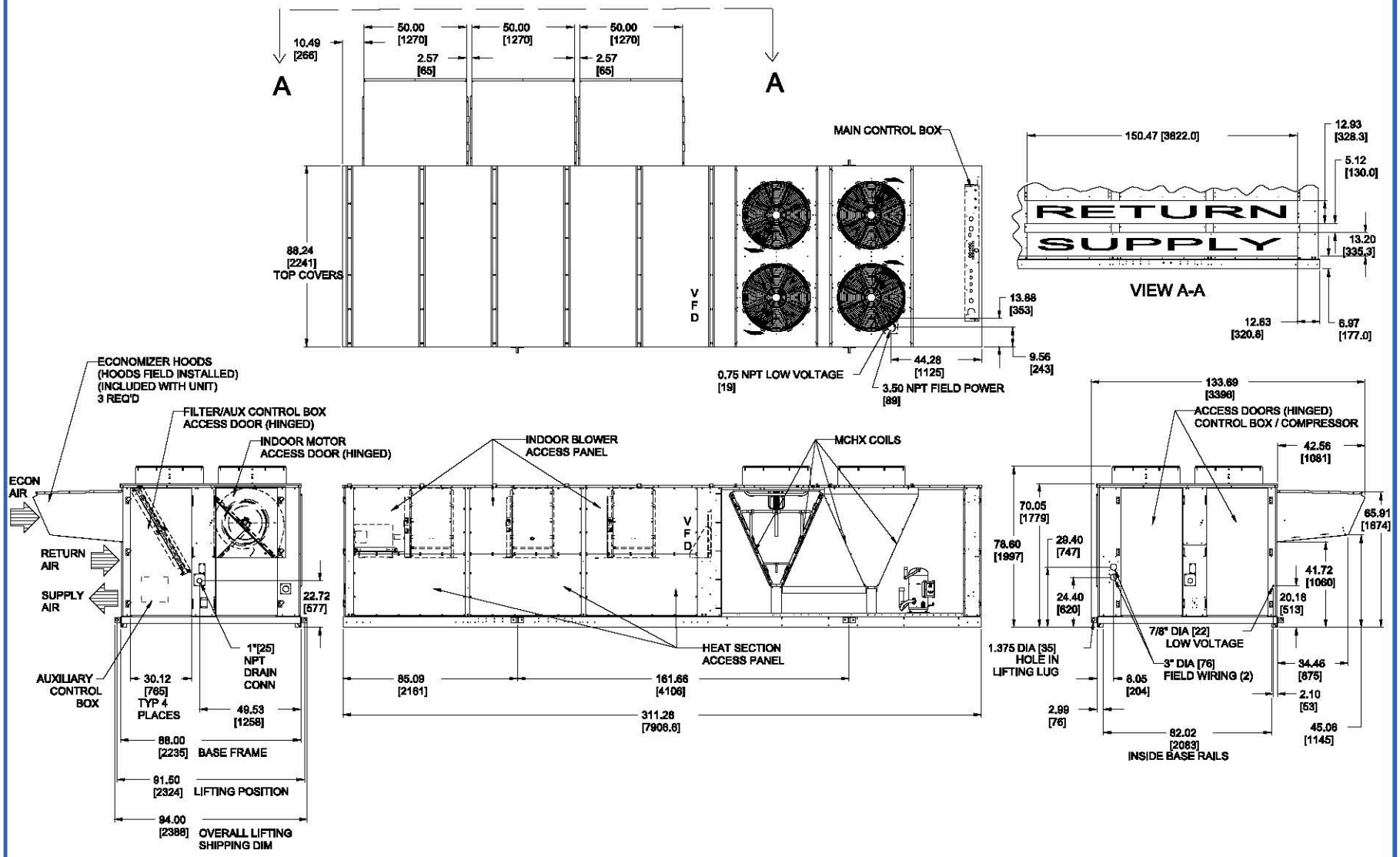

FOR CENTERS OF GRAVITY, OPERATING AND CORNER WEIGHTS, SEE PAGE 38

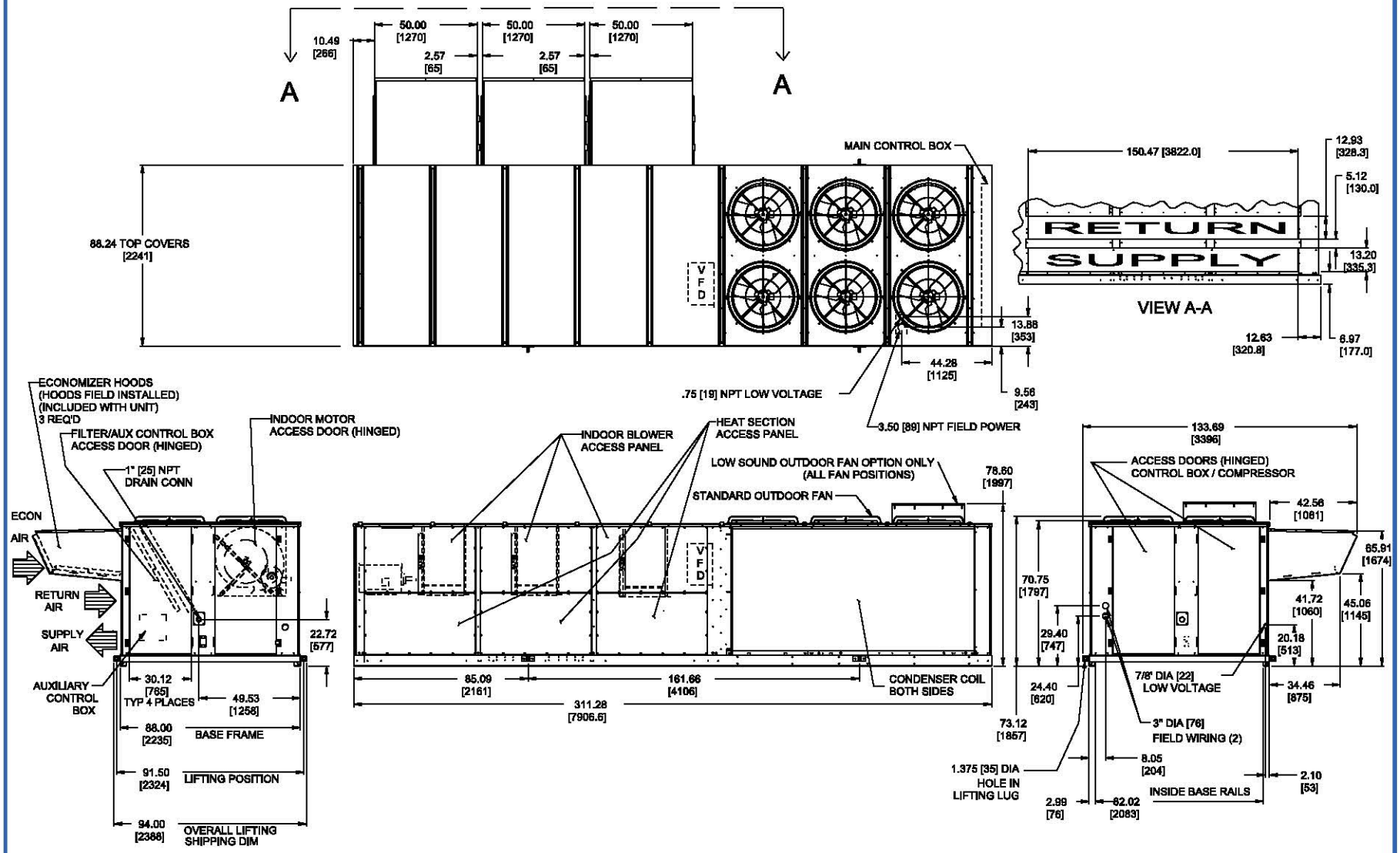

CENTER OF GRAVITY AND WEIGHTS — 50A060

NOTES:
1. Weights include economizer or outdoor air damper.
2. ⊕ center of gravity.
3. Unit clearances:
   Top of units: no overhang
   Condenser coil: 4' - 0" [1219]
   Economizer side: 6' - 0" [1829]
   Heat side: 4' - 0" [1219]
   Filter access side: 10' - 0" [3048] (for removal of evaporator coil)
4. For smaller service and operational clearances, contact Carrier application engineering department.
5. Bottom ducts are designed to be attached to accessory roof curb. If unit is mounted on dunnage, it is recommended that the ducts be supported by cross braces as done on accessory roof curb.
6. Base unit weights include outdoor air hoods and filters (indoor fan motor is not included). Add indoor fan motor, FIOPs, and accessories for total operating weight.
7. VAV motor weights include indoor motor, VFD, VFD transducer, and associated wiring.
8. Dimensions in [ ] are in millimeters. All other dimensions are in inches.
9. For side-supply/return applications, a single return and supply ductwork connection is recommended for covering all three return and all three supply openings. The entire area around the duct openings is available for a 1.5" duct flange attachment.

BASE UNIT WEIGHTS (SEE NOTE 5) LB (Kg)	
	060
50A2/A3/A6/A7	6826 (3096)
50A4/A5/A8/A9	7041 (3194)

OPTIONS / ACCESSORIES (SEE NOTE 5)	
BAROMETRIC RELIEF	450 (204)
NON MOD. POWER EXHAUST	675 (306)
MOD. POWER EXHAUST	725 (329)
ELECTRIC HEAT	165 (75)
CU TU/AL FIN COND COIL	26 (12)
CU TU/CU FIN COND COIL	677 (307)

UNIT SIZE	OPERATING WEIGHT	CENTER OF GRAVITY		CORNER WEIGHT (LB)			
		A	B				
	LB	FT/IN	FT/IN	1	2	3	4
50A2/A3/A6/A7 060	8311	15 - 5"	3 - 7 3/8"	1710	1663	2433	2504
50A4/A5/A8/A9 060	8526	14 - 8 1/2"	3 - 11 1/8"	1613	2078	2484	2351

UNIT SIZE	OPERATING WEIGHT	CENTER OF GRAVITY		CORNER WEIGHT (kg)			
		A	B				
	KG	MM	MM	1	2	3	4
50A2/A3/A6/A7 060	3770	4698	1102	776	755	1104	1136
50A4/A5/A8/A9 060	3868	4484	1196	732	942	1127	1066

* Operating weight includes largest indoor fan motor, microchannel heat exchanger, modulating power exhaust (variable air volume units), and variable frequency drive (variable air volume units).

		CV MOTOR WEIGHTS LB (Kg)		VAV MOTOR WEIGHTS LB (Kg) (SEE NOTE 6)	
		HIGH EFFC'Y IFM	PREMIUM EFFC'Y IFM	HIGH EFFC'Y IFM	PREMIUM EFFC'Y IFM
25 HP (18.65 kW)	230/460	240 (109)	309 (140)	375 (170)	444 (201)
	575	240 (109)	319 (145)	375 (170)	454 (206)
30 HP (22.38 kW)	230/460	283 (128)	355 (161)	418 (190)	490 (222)
	575	283 (128)	359 (163)	418 (190)	494 (224)
40 HP (29.84 kW)	230/460	372 (169)	415 (188)	507 (230)	550 (249)
	575	372 (169)	410 (186)	507 (230)	545 (247)

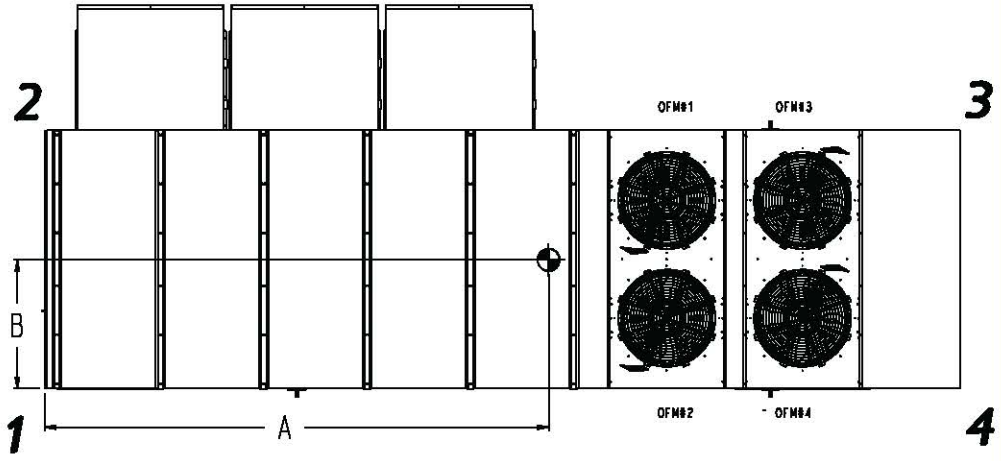

ROOF CURB SIZES 020-035

NOTES:
1. Unless otherwise specified, all dimensions are to outside of part.
2. Roof curb accessory CRRFCURB005A00 is shipped disassembled.
3. All roof curb parts are to be 14 ga. galvanized steel.
4. Units with electric heat must be installed with a 90° elbow on the supply duct prior to any supply take offs or branches.
5. Dimensions in [ ] are in millimeters. All other dimensions are in inches.

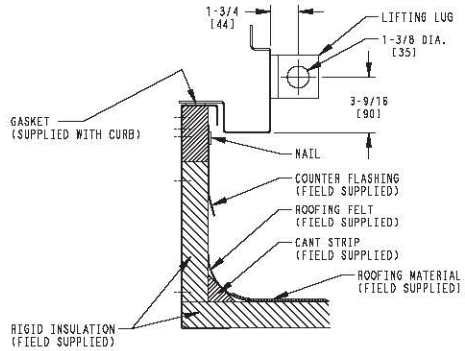

NOTE:
TO PREVENT STANDING WATER IN THE DRAIN PAN OF THE INDOOR SECTION, AND THE HEAT EXCHANGERS
UNIT CAN ONLY BE PITCHED AS SHOWN.

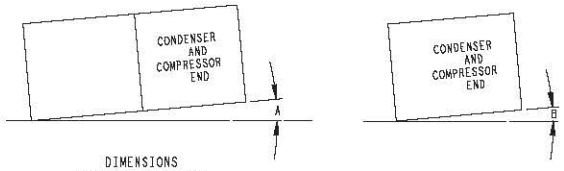

DIMENSIONS
(DEGREES AND INCHES)

A			B		
DEG.	IN.	mm	DEG.	IN.	mm
1.0	2.8	73	.50	.75	19

UNIT LEVELING TOLERANCES
♦FROM EDGE OF UNIT TO HORIZONTAL

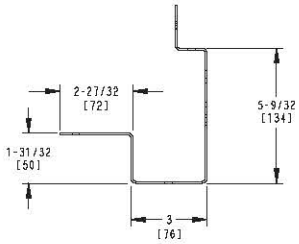

BASE RAIL CROSS SECTION
TYP 2 SIDES

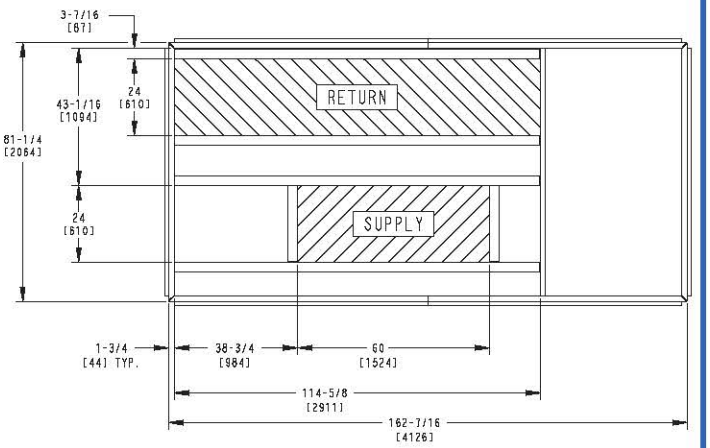

ROOF CURB DETAIL 'A'
(ALL OTHERS)

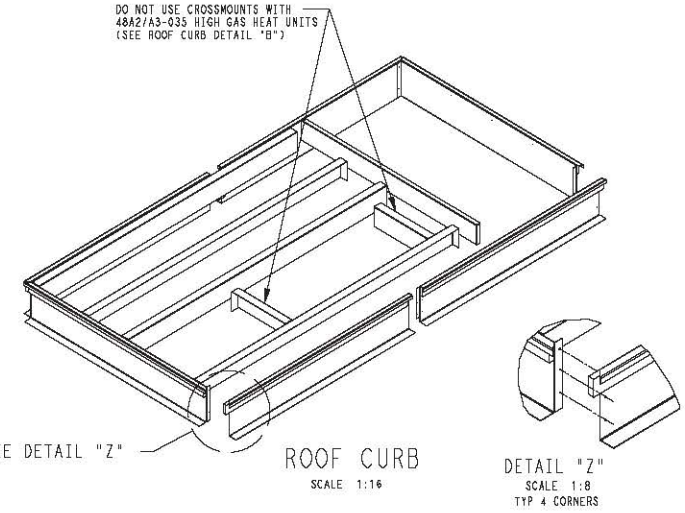

ROOF CURB
SCALE 1:16

DETAIL "Z"
SCALE 1:8
TYP 4 CORNERS

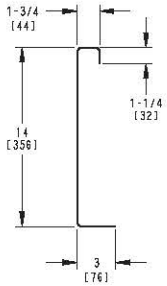

ROOF CURB CROSS SECTION
TYP 4 SIDES

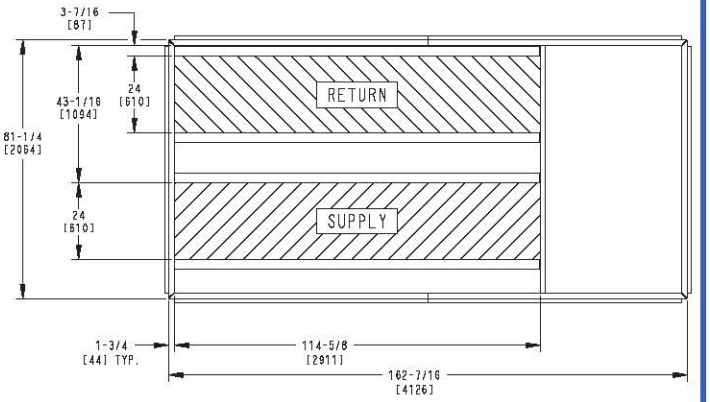

ROOF CURB DETAIL "B"
(48A2/A3/A6/A7-035 HIGH GAS HEAT ONLY)

ROOF CURB SIZES 040 AND 050

NOTES:
1. Unless otherwise specified, all dimensions are to outside of part.
2. Roof curb accessory CRRFCURB006A00 is shipped disassembled.
3. All roof curb parts are to be 14 ga. galvanized steel.
4. Units with electric heat must be installed with a 90° elbow on the supply duct prior to any supply take offs or branches.
5. Dimensions in [ ] are in millimeters. All other dimensions are in inches.

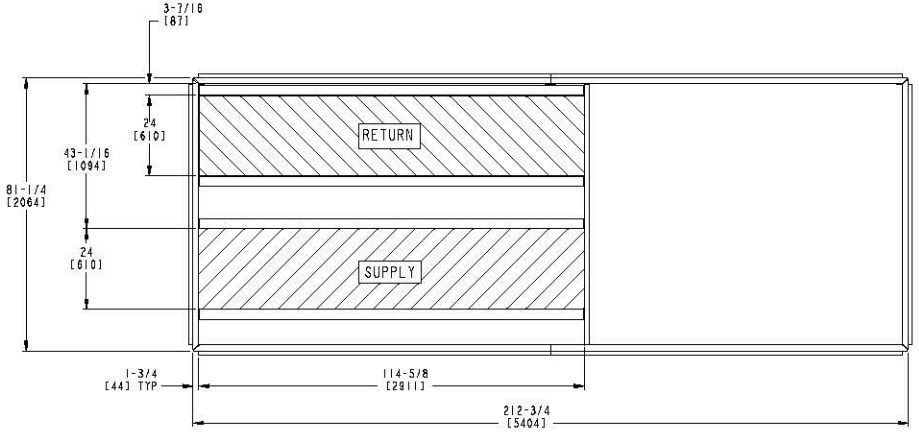

NOTE:
TO PREVENT STANDING WATER IN THE DRAIN PAN OF THE INDOOR SECTION, AND THE HEAT EXCHANGERS
UNIT CAN ONLY BE PITCHED AS SHOWN.

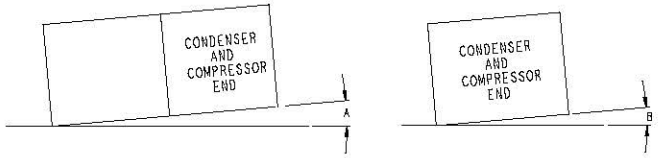

DIMENSIONS
(DEGREES AND INCHES)

A			B		
DEG.	IN.	mm	DEG.	IN.	mm
1.0	2.9	73	.50	.75	19

UNIT LEVELING TOLERANCES
*FROM EDGE OF UNIT TO HORIZONTAL

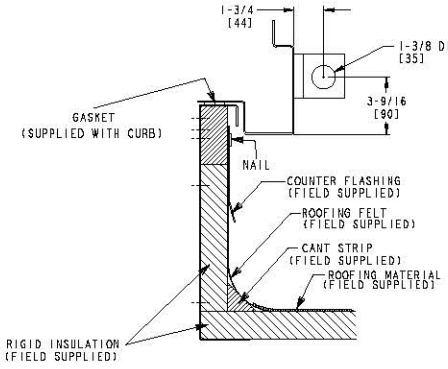

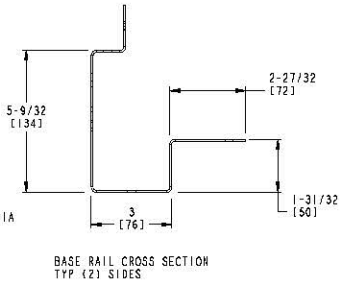

BASE RAIL CROSS SECTION
TYP (2) SIDES

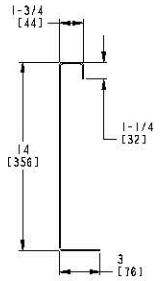

ROOF CURB CROSS SECTION
TYP 4 SIDES

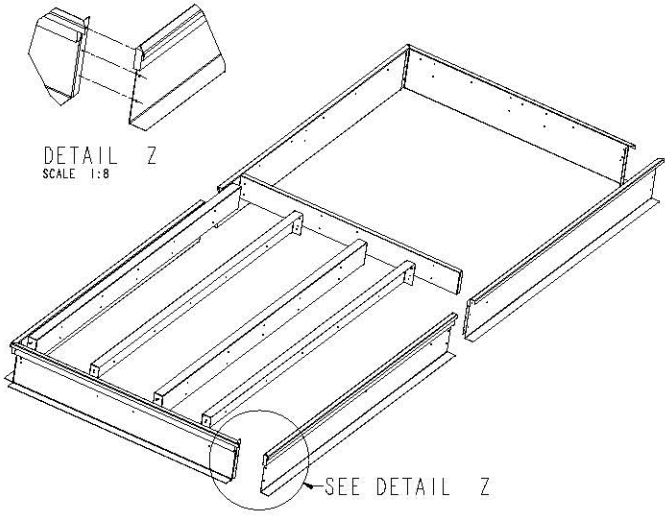

ROOF CURB 48A2,A3,A6,A7060, 50A2,A3,A6,A7060 WITHOUT ELECTRIC HEAT/UNIT SUPPORT 48/50A4,A5,A8,A9060

NOTES:
1. Unless otherwise specified, all dimensions are to outside of part.
2. Roof curb accessory CRRFCURB014A00 is shipped disassembled.
3. All roof curb parts are to be 14 ga. galvanized steel.
4. Dimensions in [ ] are in millimeters. All other dimensions are in inches.

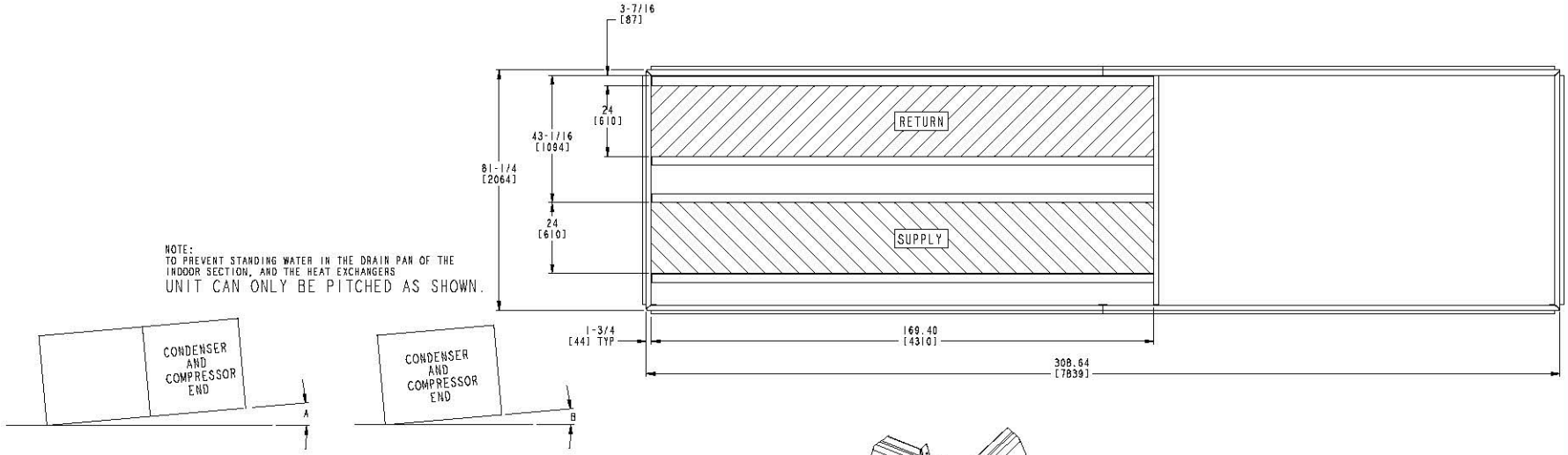

DIMENSIONS
(DEGREES AND INCHES)

A			B		
DEG.	IN.	mm	DEG.	IN.	mm
1.0	5.43	138	.50	.75	19

UNIT LEVELING TOLERANCES
*FROM EDGE OF UNIT TO HORIZONTAL

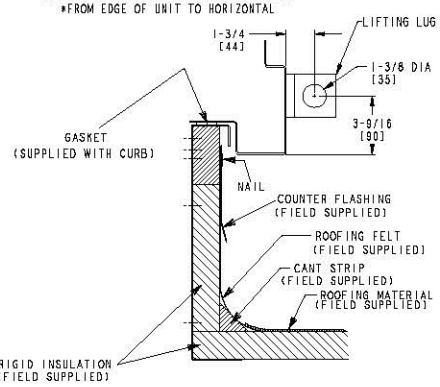

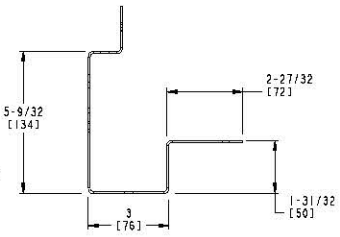

BASE RAIL CROSS SECTION
TYP (2) SIDES

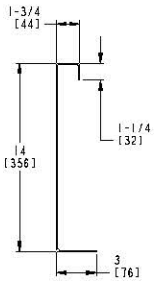

ROOF CURB CROSS SECTION
TYP 4 SIDES

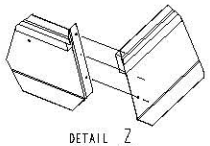

DETAIL Z
SCALE 1:8

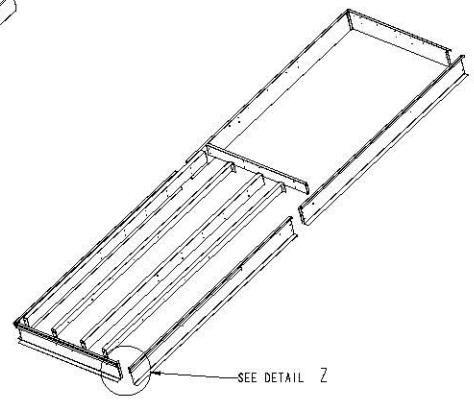

ROOF CURB 50A2,A3,A6,A7060 WITH ELECTRIC HEAT

NOTES:
1. Unless otherwise specified, all dimensions are to outside of part.
2. Roof curb accessory CRRFCURB009A00 is shipped disassembled.
3. All roof curb parts are to be 14 ga. galvanized steel.
4. Units with electric heat must be installed with a 90° elbow on the supply duct prior to any supply take offs or branches.
5. Dimensions in [ ] are in millimeters. All other dimensions are in inches.

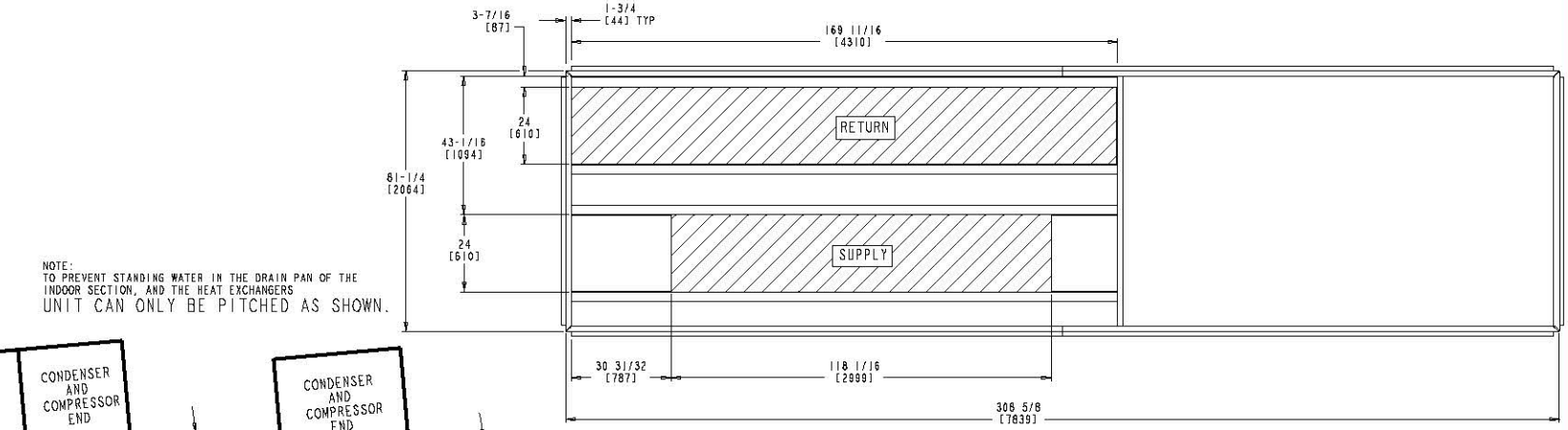

NOTE:
TO PREVENT STANDING WATER IN THE DRAIN PAN OF THE INDOOR SECTION, AND THE HEAT EXCHANGERS
UNIT CAN ONLY BE PITCHED AS SHOWN.

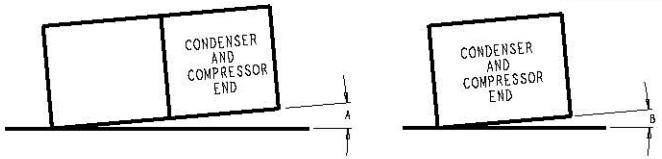

DIMENSIONS
(DEGREES AND INCHES)

A			B		
DEG.	IN.	mm	DEG.	IN.	mm
1.0	5.43	138	.50	.75	19

UNIT LEVELING TOLERANCES
*FROM EDGE OF UNIT TO HORIZONTAL

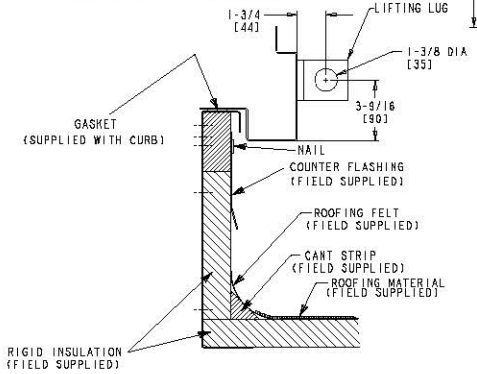

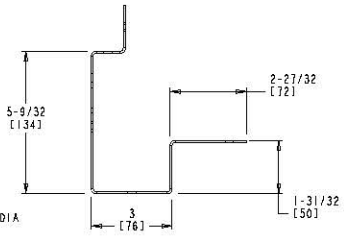

BASE RAIL CROSS SECTION
TYP (2) SIDES

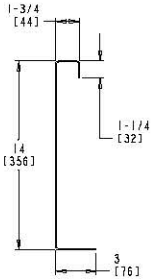

ROOF CURB CROSS SECTION
TYP 4 SIDES

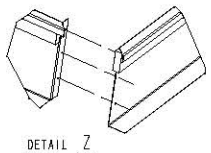

DETAIL Z
SCALE 1:8

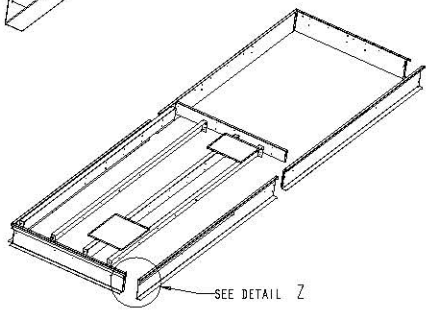

STANDARD AND MODULATING POWER EXHAUST AND BAROMETRIC RELIEF

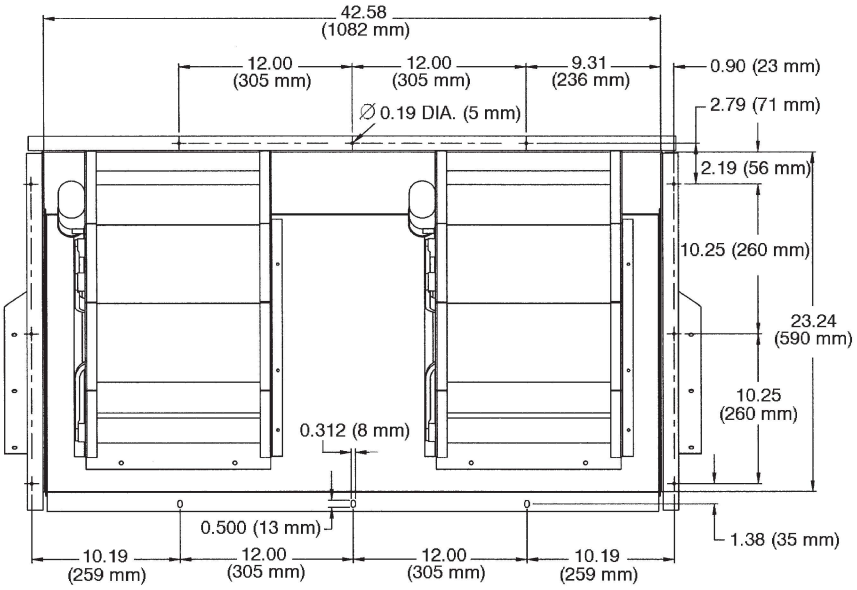

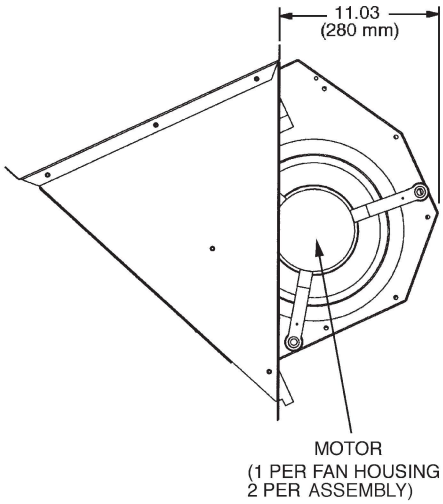

LEGEND

∅ — Diameter

NOTES:
1. Unless otherwise specified, all dimensions are to outside of part.
2. Dimensions are in inches.
3. Unit sizes 020-050 have 2 fan assemblies. Unit size 060 has 3 fan assemblies.
4. For 48/50A4,A5,A8,A9 units, the accessory power exhaust or barometric relief must be mounted in the field-supplied return ductwork.

HIGH CAPACITY POWER EXHAUST ACCESSORY

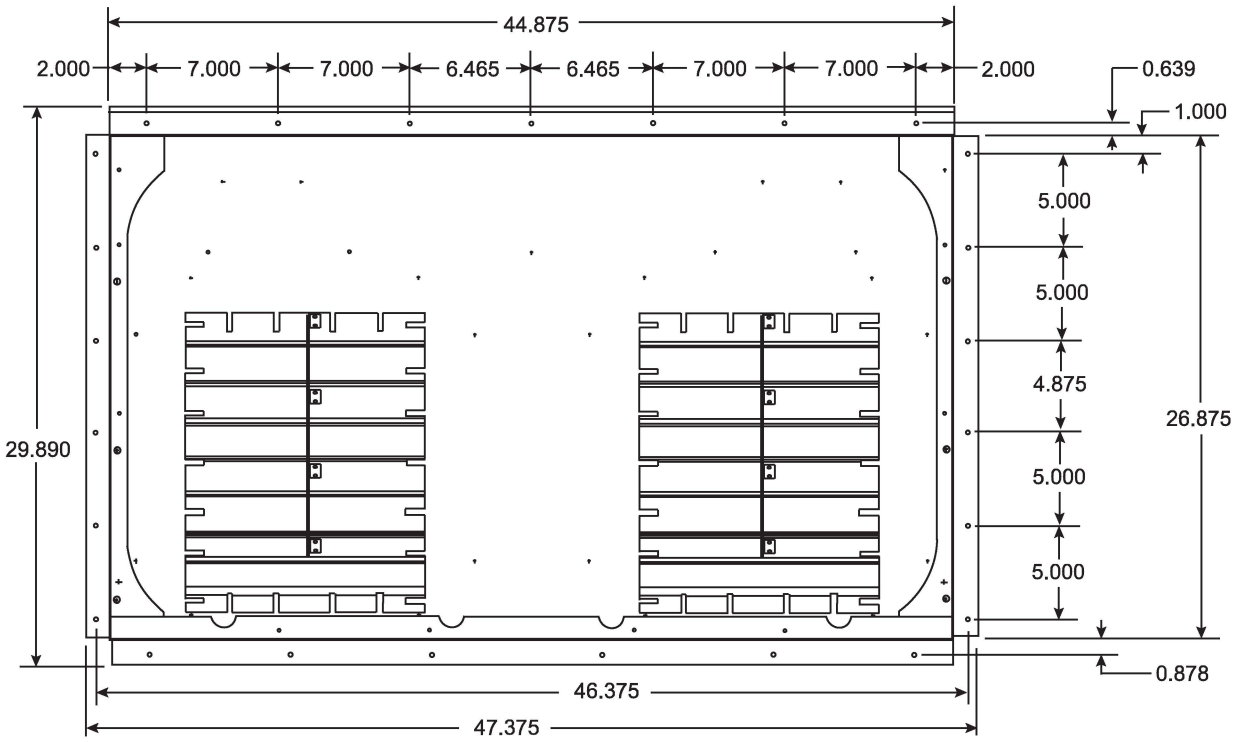

NOTE: Dimensions are in inches.

Selection procedure (with example)

I Determine cooling and heat requirements at design conditions.

Given:

Type Application	VAV
Required Cooling Capacity (TC)	480,000 Btuh
Sensible Heat Capacity (SHC)	338,000 Btuh
Required Heating Capacity	300,000 Btuh
Design Outdoor Air db Temperature	95°F
Design Outdoor Air wb Temperature	67°F
Climate Type (as per ASHRAE 90.1 Table D)	Dry
Indoor-Air Temperature	80°F edb, 67°F ewb
Evaporator Air Quantity	16,000 cfm
External Static Pressure	1.4 in. wg
Electrical Characteristics (V-Ph-Hz)	460-3-60
Unit Type	Gas Heating Vertical Discharge

II Select the unit based on required cooling capacity.

Entering Cooling Capacity table at air condenser entering temperature of 95°F. Unit 48A3D040 at 16,000 cfm and 67°F ewb will provide the total capacity of 485,000 Btuh and a SHC of 380,000 Btuh. Calculate SHC correction, if required, using notes under cooling capacity table.

III Select heat capacity of unit to provide design condition requirements.

In the Gas Heating Capacities and Efficiencies table, note that unit 48A3D040 will provide 324,000 Btuh with an input of 400,000 Btuh.

IV Select supply fan to provide design condition requirements.

Tabulated fan performance includes 2-in. throwaway filters, wet evaporator coil, economizer, cabinet losses, and roof curb. Find fan rpm and bhp at 1.4 in. wg and 16,000 cfm on 48A3D040 Fan Performance table for vertical applications. Find that the fan speed is 1063 rpm and the power required is 19.06 bhp. Refer to the Motor Limitations table which shows the 20 hp motor is required.

V Select unit that corresponds to the power source available.

The model number nomenclature shows that a 460-3-60 unit is available.

VI Select the options and accessories.

As per the ASHRAE 90.1 requirements, this unit is located in a dry climate and therefore is required to have an economizer. As this is a dry climate, either differential dry bulb changeover, outdoor air changeover or differential enthalpy should be used. Outside air enthalpy cannot be used.

Select the options and model number using the options summary and model number charts in the price pages.

Note, as an alternative, a computerized selection program, *RTU*Builder, is available for use in selecting and optimizing the unit for your application.

Performance data

Humidi-MiZer® performance data

Carrier's Humidi-MiZer adaptive dehumidification system is an all-inclusive factory-installed option that can be ordered with WeatherMaker® 48/50A rooftop units.

This system expands the envelope of operation of the A Series rooftop to provide unprecedented flexibility that will meet year-round comfort conditions.

The Humidi-MiZer adaptive dehumidification system has the industry's only dual dehumidification mode setting. The WeatherMaker rooftop, coupled with the Humidi-MiZer adaptive dehumidification system, is capable of modulating between normal design cooling mode, subcooling mode, and hot gas reheat mode.

Normal design cooling mode will operate under the normal sequence of operation. Subcooling mode will operate to satisfy part load type conditions. Hot Gas Reheat mode will operate when outdoor temperatures diminish and the need for latent capacity is required for sole humidity control. Hot Gas Reheat mode will provide neutral air for maximum dehumidification operation.

The WeatherMaker A Series next generation version of Carrier's Humidi-MiZer system includes refrigerant modulating valves that provide variable flow bypass around the condenser. This innovative feature ensures exact control of the supply-air temperature as the unit lowers the evaporator temperature to increase latent capacity.

Additionally, when the space requires dehumidification only, the Humidi-MiZer system can increase hot discharge gas bypass to the Humidi-MiZer coil in order to heat the air to the exact neutral state required—no overcooling or overheating with latent capacity similar to that provided in the full subcooling mode.

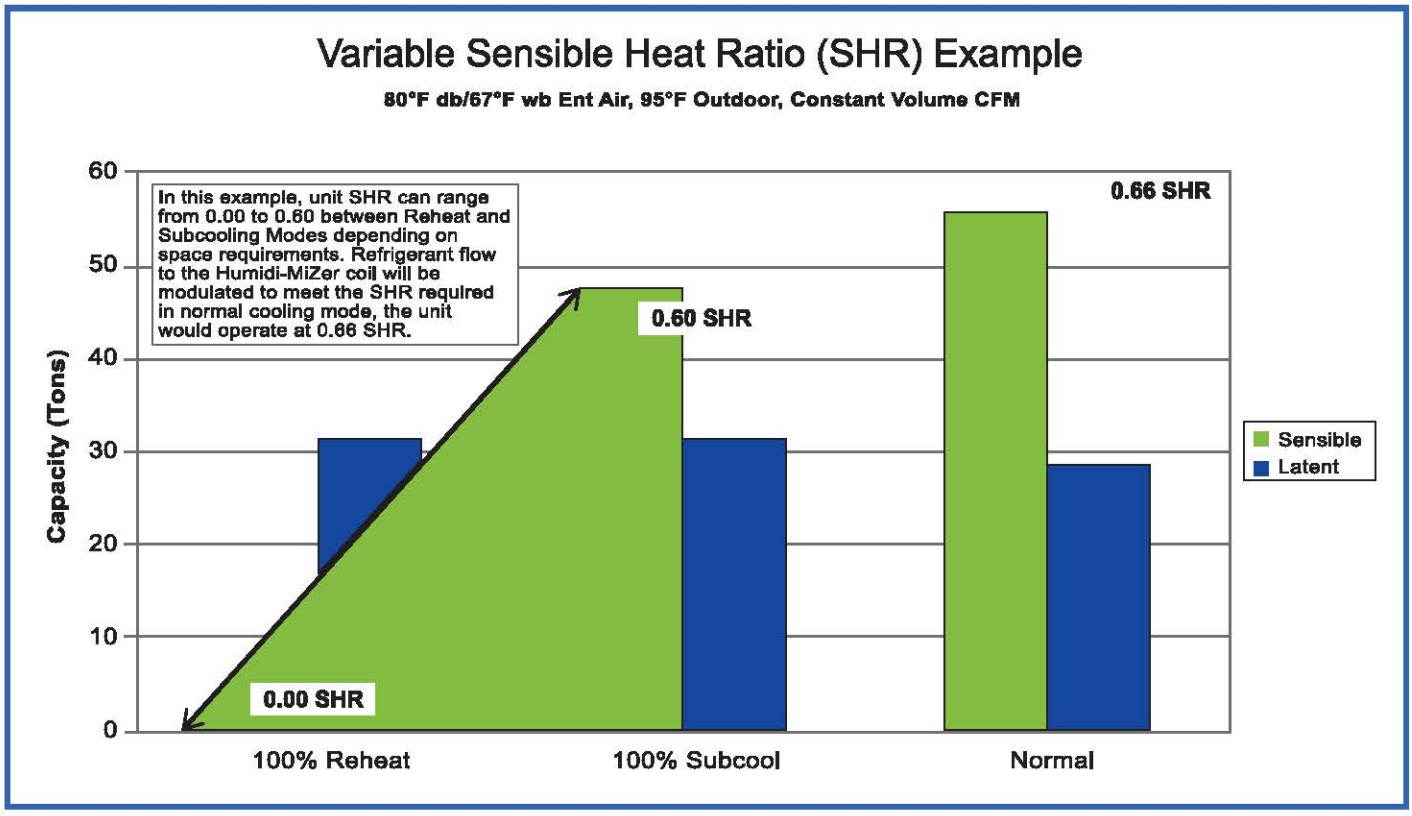

Performance data (cont)

COOLING CAPACITIES

48/50A020 (20 TONS) — STANDARD MODE

Temp (F) Air Entering Condenser (Edb)		Evaporator Air Quantity — Cfm																			
		4,000					5,000					6,000					7,000				
		Evaporator Air — Ewb (F)																			
		75	72	67	62	57	75	72	67	62	57	75	72	67	62	57	75	72	67	62	57
75	TC	268	258	236	214	195	284	272	250	228	208	294	282	260	239	224	302	289	268	246	232
	SHC	109	119	141	161	179	113	128	155	180	201	116	136	168	197	224	121	144	180	213	232
	kW	14.1	14.0	13.8	13.7	13.6	14.3	14.2	14.0	13.8	13.7	14.5	14.3	14.1	13.9	13.8	14.6	14.4	14.1	13.9	13.8
	BF	0.00	0.00	0.09	0.15	0.14	0.00	0.00	0.19	0.16	0.17	0.00	0.27	0.18	0.17	0.24	0.00	0.23	0.19	0.17	0.28
85	TC	261	250	228	207	188	276	264	242	221	200	286	273	252	230	218	293	280	259	238	226
	SHC	106	115	138	158	176	110	125	152	176	194	112	133	164	193	218	118	141	176	210	226
	kW	16.0	16.0	15.8	15.7	15.5	16.2	16.1	15.9	15.8	15.6	16.4	16.2	16.0	15.8	15.8	16.5	16.3	16.1	15.9	15.8
	BF	0.02	0.00	0.21	0.15	0.13	0.00	0.14	0.18	0.15	0.17	0.00	0.24	0.18	0.16	0.26	0.15	0.22	0.18	0.17	0.30
95	TC	253	242	220	200	181	267	254	233	212	198	277	264	242	221	207	283	271	249	228	218
	SHC	102	112	134	154	172	106	122	148	172	198	109	130	161	190	207	115	137	173	206	218
	kW	18.2	18.2	18.0	17.9	17.9	18.4	18.3	18.2	18.0	17.9	18.5	18.4	18.2	18.1	18.0	18.6	18.5	18.3	18.1	18.0
	BF	0.00	0.00	0.18	0.14	0.13	0.00	0.12	0.17	0.15	0.20	0.00	0.22	0.17	0.16	0.25	0.13	0.21	0.18	0.17	0.32
105	TC	244	232	211	191	174	257	244	223	203	187	266	253	232	211	200	272	260	238	218	211
	SHC	97	109	130	150	168	101	118	144	168	187	106	126	156	185	200	112	134	168	201	211
	kW	20.7	20.6	20.6	20.7	20.8	20.8	20.8	20.6	20.6	20.8	20.9	20.8	20.7	20.6	20.7	21.0	20.9	20.7	20.6	20.6
	BF	0.00	0.00	0.17	0.13	0.13	0.00	0.25	0.16	0.14	0.19	0.00	0.20	0.16	0.15	0.28	0.28	0.20	0.17	0.17	0.35
115	TC	234	222	201	182	166	246	233	212	193	180	254	241	220	201	192	260	247	227	207	202
	SHC	93	105	126	146	162	97	114	139	164	180	103	122	152	180	192	108	129	164	195	202
	kW	23.4	23.4	23.6	23.9	24.3	23.5	23.4	23.5	23.7	24.0	23.6	23.5	23.5	23.7	23.8	23.7	23.6	23.5	23.7	23.7
	BF	0.00	0.00	0.15	0.13	0.15	0.00	0.21	0.15	0.14	0.22	0.13	0.19	0.16	0.15	0.31	0.24	0.19	0.17	0.18	0.38
120	TC	228	216	196	178	161	240	227	207	188	175	247	235	215	195	188	253	241	220	201	198
	SHC	91	103	124	143	159	95	112	137	161	175	101	120	150	178	188	106	127	162	192	198
	kW	24.9	25.1	25.4	25.7	26.3	24.9	25.0	25.2	25.5	25.8	25.0	25.0	25.1	25.4	25.6	25.1	25.0	25.1	25.3	25.4
	BF	0.00	0.12	0.14	0.12	0.15	0.00	0.20	0.15	0.14	0.24	0.29	0.18	0.16	0.15	0.32	0.23	0.18	0.17	0.18	0.39

48/50A020 (20 TONS) — STANDARD MODE (cont)

Temp (F) Air Entering Condenser (Edb)		Evaporator Air Quantity — Cfm														
		8,000					9,000					10,000				
		Evaporator Air — Ewb (F)														
		75	72	67	62	57	75	72	67	62	57	75	72	67	62	57
75	TC	308	295	274	252	243	313	299	278	257	251	317	303	282	262	259
	SHC	126	151	191	228	243	130	158	202	242	251	135	164	212	251	259
	kW	14.7	14.5	14.2	14.0	13.9	14.8	14.5	14.3	14.0	14.0	14.8	14.6	14.3	14.1	14.1
	BF	0.34	0.22	0.19	0.19	0.34	0.28	0.22	0.20	0.21	0.40	0.26	0.23	0.21	0.25	0.44
85	TC	298	286	265	243	236	302	290	269	248	244	306	294	273	253	251
	SHC	123	148	188	224	236	127	155	199	236	244	131	161	209	247	251
	kW	16.6	16.4	16.1	16.0	15.9	16.6	16.4	16.2	16.0	16.0	16.7	16.5	16.2	16.1	16.0
	BF	0.29	0.21	0.19	0.19	0.36	0.26	0.22	0.20	0.22	0.41	0.25	0.22	0.21	0.25	0.46
95	TC	288	276	255	234	228	293	280	259	239	236	296	284	262	245	243
	SHC	120	145	184	219	228	124	151	195	230	236	129	158	205	239	243
	kW	18.7	18.5	18.3	18.2	18.1	18.7	18.6	18.4	18.2	18.2	18.8	18.6	18.4	18.2	18.3
	BF	0.27	0.21	0.18	0.19	0.38	0.25	0.21	0.19	0.23	0.43	0.24	0.22	0.20	0.28	0.47
105	TC	277	265	243	223	220	281	269	248	229	227	284	272	251	235	234
	SHC	116	141	180	213	220	121	148	191	223	227	125	154	201	232	234
	kW	21.1	20.9	20.8	20.6	20.6	21.1	21.0	20.8	20.6	20.6	21.2	21.0	20.8	20.7	20.7
	BF	0.24	0.20	0.18	0.21	0.41	0.23	0.20	0.19	0.25	0.45	0.23	0.21	0.20	0.29	0.49
115	TC	264	252	231	213	211	268	256	235	219	218	271	258	238	225	224
	SHC	113	137	175	206	211	117	144	186	216	218	121	150	197	221	224
	kW	23.7	23.6	23.5	23.6	23.6	23.8	23.7	23.5	23.5	23.6	23.8	23.7	23.5	23.5	23.5
	BF	0.22	0.19	0.18	0.22	0.43	0.22	0.20	0.19	0.26	0.48	0.22	0.21	0.20	0.32	0.52
120	TC	257	245	225	207	206	261	248	229	215	213	263	251	232	219	219
	SHC	110	134	173	202	206	115	141	184	215	213	119	148	194	219	219
	kW	25.1	25.1	25.1	25.2	25.3	25.2	25.1	25.0	25.2	25.2	25.3	25.1	25.0	25.1	25.1
	BF	0.22	0.19	0.18	0.23	0.44	0.22	0.20	0.19	0.29	0.49	0.22	0.21	0.20	0.32	0.53

See legend on page 58.

COOLING CAPACITIES (cont)

48/50A020 (20 TONS) — SUBCOOLING MODE

Temp (F) Air Entering Condenser (Edb)		Evaporator Air Quantity – SCFM																			
		4,000					5,000					6,000					7,000				
		Evaporator Air Ewb (F)																			
		75	72	67	62	57	75	72	67	62	57	75	72	67	62	57	75	72	67	62	57
75	TC	265	249	223	204	184	285	269	239	220	199	293	277	251	232	212	303	286	260	236	222
	SHC	96	109	126	147	166	107	121	140	168	191	109	126	153	186	209	115	134	166	197	222
	kW	14.0	13.8	13.6	13.5	13.4	14.1	14.0	13.7	13.6	13.5	14.2	14.0	13.8	13.7	13.6	14.3	14.1	13.9	13.7	13.6
	BF	0.00	0.02	0.09	0.10	0.10	0.00	0.08	0.11	0.12	0.12	0.03	0.11	0.13	0.14	0.19	0.08	0.14	0.15	0.15	0.25
85	TC	249	234	201	193	173	265	250	219	207	187	277	262	240	214	199	286	270	248	226	212
	SHC	83	96	106	139	157	91	105	123	157	179	97	114	145	170	197	102	122	157	191	212
	kW	15.5	15.4	15.1	15.1	15.0	15.7	15.5	15.2	15.2	15.1	15.8	15.6	15.4	15.2	15.1	15.9	15.7	15.5	15.3	15.3
	BF	0.00	0.03	0.09	0.10	0.10	0.01	0.09	0.12	0.12	0.14	0.05	0.12	0.13	0.14	0.20	0.10	0.14	0.15	0.15	0.26
95	TC	235	222	201	177	162	251	237	214	192	177	262	247	223	204	188	270	255	231	210	199
	SHC	72	87	108	125	148	80	95	121	145	170	86	103	132	163	188	90	110	144	179	199
	kW	17.3	17.2	17.0	16.8	16.7	17.5	17.3	17.1	16.9	16.9	17.6	17.4	17.2	17.0	17.0	17.7	17.5	17.3	17.1	17.0
	BF	0.00	0.05	0.10	0.10	0.10	0.02	0.10	0.12	0.12	0.16	0.07	0.12	0.13	0.14	0.20	0.10	0.14	0.15	0.16	0.28
105	TC	221	207	186	167	150	226	220	199	176	163	246	231	209	189	176	214	238	215	196	181
	SHC	61	75	97	118	138	58	82	109	132	158	72	90	121	151	176	38	97	131	168	181
	kW	19.3	19.2	19.0	18.9	18.8	19.3	19.3	19.2	18.9	18.9	19.6	19.4	19.2	19.1	19.0	19.0	19.5	19.3	19.1	19.0
	BF	0.00	0.07	0.10	0.10	0.11	0.03	0.10	0.12	0.12	0.17	0.08	0.12	0.14	0.14	0.22	0.11	0.14	0.15	0.16	0.30
115	TC	205	191	170	150	136	219	205	184	165	151	199	215	192	173	157	222	200	198	178	168
	SHC	50	63	84	104	126	55	71	97	124	147	31	78	108	140	157	50	63	119	153	168
	kW	21.6	21.5	21.3	21.1	21.1	21.7	21.6	21.4	21.3	21.2	21.4	21.7	21.5	21.4	21.2	21.6	21.4	21.5	21.4	21.3
	BF	0.00	0.08	0.10	0.10	0.11	0.04	0.11	0.12	0.12	0.18	0.09	0.13	0.14	0.14	0.24	0.12	0.14	0.15	0.16	0.32

48/50A020 (20 TONS) — SUBCOOLING MODE (cont)

Temp (F) Air Entering Condenser (Edb)		Evaporator Air Quantity – SCFM														
		8,000					9,000					10,000				
		Evaporator Air Ewb (F)														
		75	72	67	62	57	75	72	67	62	57	75	72	67	62	57
75	TC	317	299	267	242	235	317	300	273	248	243	322	305	280	258	251
	SHC	126	147	177	213	235	126	149	188	227	243	130	156	202	246	251
	kW	14.4	14.3	13.9	13.7	13.7	14.4	14.2	14.0	13.8	13.8	14.4	14.3	14.1	13.9	13.8
	BF	0.12	0.16	0.17	0.17	0.32	0.14	0.18	0.18	0.19	0.37	0.17	0.19	0.20	0.21	0.42
85	TC	294	277	252	232	222	299	284	260	238	231	307	290	264	238	234
	SHC	108	129	166	205	222	112	138	180	220	231	120	146	190	225	234
	kW	15.9	15.8	15.5	15.4	15.3	16.0	15.8	15.6	15.5	15.4	16.1	15.9	15.7	15.4	15.4
	BF	0.13	0.16	0.17	0.17	0.33	0.15	0.18	0.18	0.20	0.38	0.17	0.19	0.20	0.24	0.43
95	TC	277	262	236	217	209	282	267	241	221	216	287	270	246	226	223
	SHC	95	118	153	194	209	99	124	165	206	216	104	130	176	214	223
	kW	17.7	17.6	17.3	17.2	17.1	17.8	17.6	17.4	17.2	17.2	17.8	17.7	17.4	17.3	17.2
	BF	0.13	0.16	0.17	0.18	0.34	0.15	0.18	0.18	0.20	0.40	0.17	0.19	0.20	0.25	0.44
105	TC	248	224	221	198	195	230	240	225	186	199	256	217	229	213	207
	SHC	70	84	142	178	195	51	101	153	171	199	77	83	163	203	207
	kW	19.6	19.3	19.3	19.1	19.2	19.3	19.5	19.4	18.9	19.2	19.7	19.2	19.4	19.3	19.2
	BF	0.14	0.16	0.17	0.18	0.36	0.16	0.18	0.18	0.22	0.41	0.18	0.19	0.20	0.26	0.45
115	TC	186	182	204	185	178	237	185	208	189	186	205	187	195	195	192
	SHC	14	46	130	166	178	63	51	140	175	186	31	56	133	187	192
	kW	21.1	21.1	21.6	21.5	21.4	21.7	21.2	21.6	21.5	21.5	21.3	21.2	21.4	21.5	21.5
	BF	0.14	0.16	0.17	0.20	0.38	0.16	0.18	0.18	0.24	0.43	0.18	0.19	0.19	0.27	0.47

See legend on page 58.

Performance data (cont)

COOLING CAPACITIES (cont)

50A020 (20 TONS) — HOT GAS REHEAT MODE

Temp (F) Air Entering Condenser (Edb)		Air Entering Evaporator — Ewb (F)													
		75 Dry Bulb							75 Dry Bulb						
		62.5 Wet Bulb (50% RH)							65.3 Wet Bulb (60% RH)						
		Air Entering Evaporator — SCFM													
		4,000	5,000	6,000	7,000	8,000	9,000	10,000	4,000	5,000	6,000	7,000	8,000	9,000	10,000
40	TC	78	87	94	99	104	107	109	83	93	101	106	111	114	117
	SHC	0	8	16	25	33	41	49	–17	–11	–5	1	6	12	18
	kW	15.8	15.1	14.8	14.5	14.4	14.3	14.2	16.6	15.8	15.4	15.1	14.9	14.8	14.7
	BF	0.07	0.09	0.11	0.13	0.14	0.15	0.17	0.05	0.08	0.10	0.12	0.14	0.15	0.17
50	TC	72	81	87	92	95	98	100	76	86	92	97	101	104	107
	SHC	–4	4	12	21	29	36	44	–21	–15	–10	–4	2	7	13
	kW	16.4	15.7	15.3	15.0	14.9	14.8	14.7	17.1	16.3	15.9	15.6	15.4	15.3	15.2
	BF	0.07	0.09	0.11	0.13	0.14	0.15	0.17	0.06	0.08	0.10	0.12	0.14	0.15	0.17
60	TC	66	75	81	85	88	91	93	71	80	87	91	94	97	99
	SHC	–8	1	9	17	25	33	40	–24	–19	–13	–7	–2	3	9
	kW	17.0	16.2	15.8	15.5	15.4	15.3	15.2	17.7	16.9	16.4	16.1	15.9	15.8	15.7
	BF	0.07	0.09	0.11	0.13	0.14	0.15	0.17	0.06	0.09	0.11	0.12	0.14	0.15	0.17
70	TC	61	69	75	79	82	85	86	65	74	80	85	88	90	92
	SHC	–11	–3	5	14	22	29	37	–28	–22	–17	–11	–5	0	6
	kW	17.6	16.8	16.4	16.1	16.0	15.8	15.8	18.4	17.5	17.0	16.7	16.5	16.3	16.2
	BF	0.07	0.09	0.11	0.13	0.14	0.15	0.17	0.06	0.09	0.11	0.12	0.14	0.15	0.17
75	TC	58	67	72	76	79	81	83	63	71	77	81	84	87	89
	SHC	–13	–4	4	12	20	28	35	–29	–24	–18	–13	–7	–2	4
	kW	17.9	17.2	16.7	16.5	16.3	16.2	16.1	18.7	17.8	17.3	17.0	16.8	16.7	16.6
	BF	0.07	0.09	0.11	0.13	0.14	0.15	0.17	0.06	0.09	0.11	0.12	0.14	0.15	0.17
80	TC	56	64	70	73	76	78	80	60	69	74	78	81	84	85
	SHC	–14	–6	2	10	18	26	34	–31	–25	–20	–14	–9	–3	2
	kW	18.3	17.5	17.1	16.8	16.6	16.5	16.4	19.1	18.2	17.6	17.3	17.1	17.0	16.9
	BF	0.07	0.09	0.11	0.13	0.14	0.15	0.17	0.07	0.09	0.11	0.12	0.14	0.15	0.17

50A020 (20 TONS) — HOT GAS REHEAT MODE (cont)

Temp (F) Air Entering Condenser (Edb)		Air Entering Evaporator — Ewb (F)													
		75 Dry Bulb							75 Dry Bulb						
		68.0 Wet Bulb (70% RH)							70.5 Wet Bulb (80% RH)						
		Air Entering Evaporator — SCFM													
		4,000	5,000	6,000	7,000	8,000	9,000	10,000	4,000	5,000	6,000	7,000	8,000	9,000	10,000
40	TC	87	99	107	113	117	121	123	92	104	112	119	123	127	130
	SHC	–34	–30	–27	–23	–20	–16	–13	–50	–49	–47	–46	–44	–43	–41
	kW	17.4	16.5	16.0	15.6	15.4	15.3	15.2	18.2	17.1	16.5	16.2	15.9	15.8	15.6
	BF	0.02	0.04	0.08	0.11	0.12	0.14	0.16	0.00	0.00	0.03	0.05	0.09	0.11	0.13
50	TC	81	91	98	104	108	111	114	85	96	104	110	114	117	120
	SHC	–38	–34	–31	–28	–24	–21	–17	–54	–53	–51	–50	–49	–47	–46
	kW	17.9	17.0	16.4	16.1	15.9	15.8	15.6	18.7	17.6	17.0	16.6	16.4	16.2	16.1
	BF	0.02	0.06	0.09	0.11	0.13	0.14	0.16	0.00	0.00	0.03	0.06	0.09	0.12	0.14
60	TC	75	85	92	96	100	103	105	79	90	96	101	105	108	111
	SHC	–41	–38	–35	–31	–28	–25	–22	–57	–56	–55	–54	–53	–51	–50
	kW	18.5	17.5	17.0	16.6	16.4	16.3	16.2	19.3	18.2	17.5	17.2	16.9	16.7	16.6
	BF	0.02	0.06	0.09	0.11	0.13	0.15	0.16	0.00	0.01	0.03	0.07	0.10	0.12	0.14
70	TC	70	79	85	90	93	95	97	74	83	90	95	98	101	103
	SHC	–44	–41	–38	–35	–32	–29	–25	–60	–59	–58	–57	–56	–55	–54
	kW	19.1	18.1	17.6	17.2	17.0	16.8	16.7	19.9	18.8	18.1	17.7	17.5	17.3	17.2
	BF	0.03	0.07	0.09	0.11	0.13	0.15	0.16	0.00	0.01	0.04	0.08	0.10	0.12	0.14
75	TC	67	76	82	86	90	92	94	71	80	87	91	95	97	99
	SHC	–46	–43	–40	–37	–33	–30	–27	–62	–61	–60	–59	–58	–57	–55
	kW	19.5	18.4	17.9	17.5	17.3	17.1	17.0	20.2	19.1	18.4	18.1	17.8	17.6	17.5
	BF	0.03	0.07	0.09	0.11	0.13	0.15	0.16	0.00	0.01	0.04	0.08	0.10	0.13	0.14
80	TC	64	73	79	83	86	89	91	68	77	84	88	91	94	96
	SHC	–48	–44	–41	–38	–35	–32	–28	–64	–62	–61	–61	–60	–58	–57
	kW	19.8	18.8	18.2	17.9	17.6	17.5	17.4	20.6	19.4	18.8	18.4	18.1	17.9	17.8
	BF	0.03	0.07	0.09	0.11	0.13	0.15	0.16	0.00	0.01	0.05	0.08	0.11	0.13	0.15

See legend on page 58.

COOLING CAPACITIES (cont)

48/50A025 (25 TONS) — STANDARD MODE

Temp (F) Air Entering Condenser (Edb)		Evaporator Air Quantity — Cfm																			
		5,000					6,250					7,500					8,750				
		Evaporator Air — Ewb (F)																			
		75	72	67	62	57	75	72	67	62	57	75	72	67	62	57	75	72	67	62	57
75	TC	318	305	281	260	239	335	320	296	274	253	347	331	307	284	268	354	339	315	292	280
	SHC	128	142	173	201	226	133	154	190	224	251	138	165	205	242	268	145	175	220	264	280
	kW	18.7	18.4	17.9	17.6	17.2	19.0	18.7	18.2	17.8	17.4	19.3	18.9	18.4	18.0	17.7	19.4	19.1	18.6	18.1	17.9
	BF	0.00	0.00	0.18	0.13	0.11	0.00	0.11	0.16	0.13	0.16	0.00	0.22	0.17	0.15	0.24	0.13	0.21	0.17	0.16	0.32
85	TC	308	295	274	253	232	324	309	287	266	248	334	319	297	275	261	341	327	305	283	273
	SHC	124	139	170	197	222	127	151	186	220	248	135	161	202	242	261	141	170	216	260	273
	kW	20.8	20.5	20.1	19.8	19.5	21.1	20.8	20.3	20.0	19.6	21.3	21.0	20.5	20.1	19.9	21.5	21.2	20.7	20.3	20.1
	BF	0.00	0.00	0.17	0.12	0.12	0.00	0.10	0.16	0.13	0.18	0.00	0.21	0.16	0.15	0.26	0.11	0.20	0.17	0.16	0.33
95	TC	298	286	265	244	224	312	300	278	257	241	321	309	288	266	254	328	316	295	273	265
	SHC	119	136	166	193	217	124	147	182	216	241	131	157	198	236	254	137	166	212	255	265
	kW	23.1	22.8	22.5	22.3	22.0	23.4	23.1	22.8	22.5	22.2	23.6	23.4	23.0	22.6	22.4	23.8	23.5	23.1	22.7	22.6
	BF	0.00	0.00	0.15	0.12	0.12	0.00	0.24	0.15	0.13	0.20	0.13	0.20	0.16	0.15	0.28	0.26	0.19	0.17	0.17	0.35
105	TC	289	277	256	235	214	302	290	268	247	231	311	298	277	255	245	318	304	283	262	257
	SHC	116	133	162	188	208	121	144	178	211	228	128	153	193	231	245	134	163	208	249	257
	kW	25.7	25.6	25.3	25.1	24.9	26.0	25.9	25.6	25.3	25.0	26.2	26.0	25.8	25.5	25.3	26.4	26.2	25.9	25.5	25.4
	BF	0.00	0.00	0.14	0.11	0.12	0.00	0.21	0.15	0.13	0.22	0.11	0.18	0.15	0.15	0.30	0.24	0.18	0.17	0.17	0.37
115	TC	278	266	245	224	207	289	278	256	236	223	298	285	264	243	236	305	290	270	250	247
	SHC	111	128	157	183	203	117	139	173	205	223	124	149	188	225	236	130	158	203	242	247
	kW	28.7	28.6	28.5	28.6	28.3	29.0	28.9	28.7	28.7	28.5	29.2	29.1	28.9	28.7	28.5	29.4	29.1	28.9	28.7	28.6
	BF	0.00	0.09	0.13	0.11	0.16	0.00	0.19	0.14	0.13	0.24	0.26	0.17	0.15	0.15	0.33	0.22	0.17	0.16	0.18	0.40

48/50A025 (25 TONS) — STANDARD MODE (cont)

Temp (F) Air Entering Condenser (Edb)		Evaporator Air Quantity — Cfm														
		10,000					11,250					12,500				
		Evaporator Air — Ewb (F)														
		75	72	67	62	57	75	72	67	62	57	75	72	67	62	57
75	TC	361	346	321	297	291	367	351	326	303	300	372	355	330	309	307
	SHC	152	184	234	281	291	158	192	248	295	300	163	201	261	305	307
	kW	19.6	19.2	18.7	18.2	18.1	19.7	19.3	18.8	18.4	18.3	19.8	19.4	18.9	18.5	18.4
	BF	0.28	0.20	0.18	0.19	0.38	0.25	0.21	0.19	0.21	0.43	0.25	0.22	0.20	0.26	0.48
85	TC	348	332	310	288	283	353	337	315	294	291	357	341	318	299	299
	SHC	148	179	230	275	283	153	188	244	288	291	159	197	257	296	299
	kW	21.6	21.3	20.8	20.4	20.3	21.8	21.4	20.9	20.5	20.4	21.8	21.5	21.0	20.6	20.6
	BF	0.25	0.20	0.18	0.19	0.40	0.24	0.21	0.19	0.23	0.45	0.24	0.21	0.20	0.26	0.49
95	TC	335	321	300	278	275	340	325	304	284	283	343	330	308	290	290
	SHC	144	175	226	270	275	150	184	240	281	283	155	192	253	290	290
	kW	23.9	23.6	23.2	22.8	22.7	24.0	23.7	23.3	22.9	22.9	24.1	23.8	23.4	23.0	23.0
	BF	0.24	0.19	0.18	0.19	0.41	0.23	0.19	0.19	0.24	0.46	0.23	0.21	0.20	0.29	0.50
105	TC	323	310	288	268	266	328	314	292	275	274	331	318	296	280	280
	SHC	140	172	222	260	266	146	180	235	268	274	151	188	248	280	280
	kW	26.6	26.3	26.0	25.5	25.5	26.7	26.4	26.0	25.6	25.7	26.8	26.5	26.1	25.8	25.8
	BF	0.22	0.18	0.18	0.22	0.43	0.22	0.20	0.19	0.27	0.48	0.22	0.21	0.20	0.31	0.52
115	TC	309	297	275	256	255	313	300	278	263	263	317	303	281	269	269
	SHC	136	167	217	254	255	142	175	230	261	263	147	184	243	269	269
	kW	29.6	29.4	29.0	28.7	28.7	29.7	29.4	29.1	28.8	28.8	29.8	29.5	29.1	28.9	28.9
	BF	0.21	0.19	0.18	0.23	0.46	0.21	0.20	0.19	0.30	0.50	0.21	0.21	0.20	0.34	0.54

See legend on page 58.

Performance data (cont)

COOLING CAPACITIES (cont)

48/50A025 (25 TONS) — SUBCOOLING MODE

Temp (F) Air Entering Condenser (Edb)		Evaporator Air Quantity – SCFM																			
		5,000					6,250					7,500					8,750				
		Evaporator Air Ewb (F)																			
		75	72	67	62	57	75	72	67	62	57	75	72	67	62	57	75	72	67	62	57
75	TC	331	298	284	253	233	338	321	292	276	251	359	334	317	290	267	367	358	316	288	271
	SHC	118	121	162	183	212	115	136	170	213	242	130	147	198	236	267	134	170	202	246	271
	kW	18.0	17.2	17.2	16.5	16.4	17.9	17.6	17.1	17.0	16.6	18.2	17.8	17.7	17.3	17.0	18.2	18.4	17.5	17.0	16.8
	BF	0.00	0.01	0.05	0.06	0.07	0.00	0.05	0.08	0.08	0.10	0.02	0.08	0.09	0.10	0.16	0.06	0.10	0.11	0.12	0.24
85	TC	314	294	265	231	222	330	314	283	261	229	332	315	288	274	252	356	337	305	272	260
	SHC	105	120	145	183	203	111	134	163	200	220	107	132	173	223	252	128	154	195	233	260
	kW	19.9	19.4	18.8	18.2	18.4	20.1	19.9	19.1	18.9	18.1	19.9	19.6	19.2	19.2	18.8	20.7	20.3	19.5	18.9	18.6
	BF	0.00	0.02	0.06	0.06	0.07	0.00	0.05	0.08	0.08	0.12	0.03	0.08	0.09	0.10	0.18	0.07	0.10	0.11	0.12	0.26
95	TC	285	281	255	232	208	312	297	265	248	226	325	309	271	258	239	336	318	280	256	254
	SHC	79	110	138	166	190	98	120	149	189	218	105	129	159	211	239	112	139	174	219	254
	kW	21.5	21.7	21.2	20.8	20.3	22.4	22.0	21.2	21.1	20.8	22.6	22.2	21.3	21.2	20.9	22.9	22.4	21.4	21.0	21.2
	BF	0.00	0.02	0.06	0.06	0.07	0.01	0.06	0.08	0.08	0.13	0.04	0.08	0.09	0.10	0.19	0.07	0.10	0.11	0.12	0.27
105	TC	267	264	229	217	196	294	279	253	231	212	293	278	254	228	222	309	293	267	235	236
	SHC	66	97	115	153	180	83	106	140	176	205	76	102	145	183	222	93	120	166	201	236
	kW	23.9	24.1	23.1	23.1	22.8	24.8	24.5	23.9	23.4	23.2	24.4	24.1	23.6	23.1	23.4	25.1	24.6	24.0	23.2	23.7
	BF	0.00	0.02	0.06	0.06	0.07	0.01	0.06	0.08	0.08	0.15	0.04	0.08	0.09	0.12	0.22	0.09	0.12	0.13	0.15	0.30
115	TC	253	245	221	189	170	259	252	223	201	184	268	255	244	211	196	276	262	239	218	220
	SHC	58	83	112	129	155	55	85	114	149	178	60	86	140	169	196	64	93	141	187	220
	kW	26.6	26.9	26.4	25.2	24.7	26.7	26.7	25.9	25.5	25.1	26.9	26.6	26.7	25.7	25.3	27.1	26.8	26.3	25.8	26.3
	BF	0.00	0.04	0.07	0.08	0.11	0.02	0.08	0.10	0.10	0.18	0.06	0.10	0.12	0.12	0.24	0.10	0.12	0.13	0.15	0.32

48/50A025 (25 TONS) — SUBCOOLING MODE (cont)

Temp (F) Air Entering Condenser (Edb)		Evaporator Air Quantity – SCFM														
		10,000					11,250					12,500				
		Evaporator Air Ewb (F)														
		75	72	67	62	57	75	72	67	62	57	75	72	67	62	57
75	TC	371	353	336	306	295	378	372	342	313	306	383	365	348	309	316
	SHC	136	166	229	276	295	142	189	244	294	306	148	184	258	299	316
	kW	18.4	18.1	18.0	17.6	17.4	18.4	18.6	18.1	17.7	17.6	18.6	18.3	18.2	17.4	17.7
	BF	0.09	0.12	0.13	0.14	0.31	0.12	0.14	0.14	0.16	0.37	0.14	0.15	0.16	0.20	0.42
85	TC	349	332	305	279	269	355	338	311	285	289	374	343	316	303	288
	SHC	119	151	203	252	269	125	159	217	268	289	144	168	230	294	288
	kW	20.2	19.9	19.5	19.0	18.8	20.3	20.1	19.6	19.1	19.4	21.0	20.1	19.7	19.7	19.2
	BF	0.10	0.12	0.13	0.14	0.33	0.12	0.14	0.14	0.17	0.38	0.14	0.15	0.15	0.22	0.43
95	TC	327	312	286	262	254	333	317	291	268	263	352	333	304	274	271
	SHC	103	135	188	237	254	108	143	202	252	263	128	163	223	265	271
	kW	22.2	22.0	21.6	21.1	20.9	22.5	22.2	21.7	21.2	21.1	23.1	22.7	22.0	21.3	21.3
	BF	0.10	0.12	0.13	0.15	0.34	0.12	0.14	0.14	0.19	0.39	0.14	0.15	0.15	0.23	0.44
105	TC	315	290	263	254	246	323	307	269	260	254	325	296	273	253	251
	SHC	98	119	169	231	246	106	139	182	244	254	109	132	195	244	251
	kW	25.2	24.4	23.8	24.0	23.8	25.5	25.1	23.9	24.1	24.0	25.5	24.5	24.0	23.6	23.5
	BF	0.12	0.14	0.15	0.18	0.36	0.14	0.16	0.17	0.23	0.42	0.16	0.18	0.18	0.26	0.46
115	TC	281	281	257	237	230	286	285	249	230	238	290	289	266	235	233
	SHC	69	114	167	214	230	73	121	167	215	238	77	129	192	227	233
	kW	27.2	27.5	27.0	26.7	26.5	27.4	27.6	26.5	26.1	26.6	27.4	27.7	27.2	26.2	26.1
	BF	0.12	0.14	0.15	0.20	0.38	0.15	0.16	0.17	0.24	0.43	0.17	0.18	0.18	0.27	0.47

See legend on page 58.

COOLING CAPACITIES (cont)

50A025 (25 TONS) — HOT GAS REHEAT MODE

Temp (F) Air Entering Condenser (Edb)		Air Entering Evaporator — Ewb (F)													
		75 Dry Bulb							75 Dry Bulb						
		62.5 Wet Bulb (50% RH)							65.3 Wet Bulb (60% RH)						
		Air Entering Evaporator — SCFM													
		5,000	6,250	7,500	8,750	10,000	11,250	12,500	5,000	6,250	7,500	8,750	10,000	11,250	12,500
40	TC	75	84	92	97	101	105	107	79	90	98	104	108	112	115
	SHC	–13	–3	7	18	29	39	50	–35	–28	–21	–14	–6	1	9
	kW	18.5	17.6	17.0	16.7	16.4	16.2	16.1	19.4	18.4	17.8	17.4	17.1	16.9	16.7
	BF	0.04	0.06	0.08	0.09	0.11	0.12	0.13	0.03	0.05	0.07	0.09	0.10	0.12	0.13
50	TC	69	78	85	90	94	96	99	73	83	90	95	99	103	105
	SHC	–17	–7	3	14	25	35	45	–39	–32	–26	–18	–11	–4	4
	kW	19.0	18.1	17.5	17.1	16.9	16.7	16.5	20.0	18.9	18.3	17.8	17.5	17.3	17.1
	BF	0.04	0.06	0.08	0.09	0.11	0.12	0.13	0.03	0.06	0.07	0.09	0.11	0.12	0.13
60	TC	63	72	78	82	85	88	90	67	76	83	87	91	94	96
	SHC	–20	–10	0	10	20	31	41	–43	–36	–30	–23	–15	–8	0
	kW	19.5	18.6	18.0	17.6	17.4	17.2	17.0	20.5	19.4	18.8	18.3	18.0	17.8	17.6
	BF	0.04	0.06	0.08	0.09	0.11	0.12	0.13	0.04	0.06	0.07	0.09	0.11	0.12	0.13
70	TC	58	66	72	76	79	81	82	61	70	76	80	83	86	88
	SHC	–24	–14	–4	6	17	27	37	–46	–40	–33	–26	–19	–12	–4
	kW	20.2	19.2	18.6	18.2	17.9	17.7	17.6	21.1	20.0	19.3	18.9	18.6	18.3	18.2
	BF	0.04	0.06	0.08	0.09	0.11	0.12	0.13	0.04	0.06	0.07	0.09	0.10	0.12	0.13
75	TC	55	63	69	73	76	78	79	58	67	73	77	80	82	84
	SHC	–26	–16	–6	5	15	25	35	–48	–42	–35	–28	–21	–14	–6
	kW	20.5	19.5	18.9	18.5	18.2	18.0	17.8	21.5	20.3	19.6	19.2	18.9	18.6	18.4
	BF	0.04	0.06	0.08	0.09	0.11	0.12	0.13	0.04	0.06	0.07	0.09	0.10	0.12	0.13
80	TC	52	60	66	70	72	74	76	56	64	70	74	77	79	81
	SHC	–27	–18	–8	3	13	24	34	–49	–43	–37	–30	–23	–15	–8
	kW	20.8	19.8	19.2	18.8	18.5	18.3	18.1	21.8	20.7	20.0	19.5	19.2	18.9	18.7
	BF	0.05	0.06	0.08	0.09	0.10	0.12	0.13	0.04	0.06	0.07	0.09	0.10	0.12	0.13

50A025 (25 TONS) — HOT GAS REHEAT MODE (cont)

Temp (F) Air Entering Condenser (Edb)		Air Entering Evaporator — Ewb (F)													
		75 Dry Bulb							75 Dry Bulb						
		68.0 Wet Bulb (70% RH)							70.5 Wet Bulb (80% RH)						
		Air Entering Evaporator — SCFM													
		5,000	6,250	7,500	8,750	10,000	11,250	12,500	5,000	6,250	7,500	8,750	10,000	11,250	12,500
40	TC	83	95	104	110	115	118	121	88	100	109	116	121	124	128
	SHC	–57	–53	–49	–46	–41	–37	–33	–78	–77	–76	–75	–74	–73	–71
	kW	20.5	19.3	18.6	18.1	17.7	17.5	17.3	21.6	20.2	19.3	18.8	18.4	18.1	17.9
	BF	0.02	0.03	0.06	0.08	0.10	0.12	0.13	0.00	0.00	0.02	0.04	0.07	0.09	0.12
50	TC	77	88	95	101	105	109	111	80	92	100	106	111	115	118
	SHC	–61	–57	–54	–50	–46	–42	–37	–82	–81	–81	–80	–79	–77	–76
	kW	21.0	19.8	19.0	18.5	18.2	17.9	17.8	22.1	20.7	19.8	19.2	18.9	18.6	18.3
	BF	0.02	0.04	0.06	0.08	0.10	0.12	0.13	0.00	0.00	0.02	0.05	0.07	0.10	0.12
60	TC	71	80	87	93	97	100	102	74	85	92	98	102	105	108
	SHC	–64	–61	–58	–54	–50	–46	–41	–86	–85	–85	–84	–83	–81	–80
	kW	21.6	20.3	19.6	19.0	18.7	18.4	18.2	22.7	21.2	20.3	19.7	19.3	19.0	18.8
	BF	0.02	0.04	0.06	0.08	0.10	0.12	0.13	0.00	0.00	0.02	0.05	0.08	0.10	0.12
70	TC	65	74	80	85	89	91	94	68	78	85	90	94	97	99
	SHC	–68	–65	–62	–58	–54	–50	–45	–89	–89	–88	–88	–87	–85	–84
	kW	22.2	20.9	20.1	19.6	19.2	19.0	18.8	23.3	21.8	20.9	20.3	19.9	19.6	19.3
	BF	0.02	0.04	0.06	0.08	0.10	0.12	0.13	0.00	0.00	0.03	0.06	0.08	0.10	0.12
75	TC	62	71	77	82	85	88	90	65	75	81	86	90	93	95
	SHC	–70	–67	–63	–60	–56	–52	–47	–91	–90	–90	–90	–89	–87	–86
	kW	22.5	21.2	20.4	19.9	19.5	19.3	19.0	23.6	22.1	21.2	20.6	20.2	19.9	19.6
	BF	0.02	0.04	0.07	0.08	0.10	0.12	0.13	0.00	0.01	0.03	0.06	0.08	0.10	0.12
80	TC	59	68	74	78	81	84	86	62	72	78	82	86	89	91
	SHC	–71	–68	–65	–62	–58	–54	–49	–92	–92	–92	–91	–91	–89	–88
	kW	22.8	21.5	20.7	20.2	19.8	19.6	19.4	23.9	22.4	21.5	20.9	20.5	20.2	19.9
	BF	0.02	0.04	0.07	0.08	0.10	0.12	0.13	0.00	0.01	0.03	0.06	0.08	0.10	0.12

See legend on page 58.

Performance data (cont)

COOLING CAPACITIES (cont)

48/50A027 (27 TONS) — STANDARD MODE

Temp (F) Air Entering Condenser (Edb)		Evaporator Air Quantity — Cfm																			
		5,500					6,875					8,250					9,625				
		Evaporator Air — Ewb (F)																			
		75	72	67	62	57	75	72	67	62	57	75	72	67	62	57	75	72	67	62	57
75	TC	339	324	297	273	251	356	340	312	288	268	368	351	323	298	283	377	359	331	305	296
	SHC	138	154	186	215	242	145	168	204	240	265	153	180	222	263	283	161	190	238	284	296
	kW	19.0	18.7	18.3	17.9	17.6	19.4	19.0	18.5	18.1	17.8	19.6	19.3	18.7	18.3	18.1	19.8	19.4	18.9	18.5	18.3
	BF	0.00	0.00	0.15	0.11	0.11	0.00	0.07	0.14	0.12	0.19	0.11	0.19	0.15	0.13	0.26	0.27	0.18	0.16	0.15	0.34
85	TC	329	313	289	265	243	344	329	303	279	262	355	339	313	289	276	364	346	321	295	288
	SHC	134	151	182	211	237	141	164	201	236	262	149	175	218	262	276	156	186	234	279	288
	kW	21.1	20.8	20.4	20.1	19.8	21.5	21.2	20.7	20.4	20.1	21.7	21.4	20.9	20.5	20.3	21.9	21.5	21.1	20.6	20.5
	BF	0.00	0.09	0.13	0.11	0.11	0.00	0.21	0.14	0.12	0.20	0.09	0.18	0.14	0.14	0.28	0.24	0.17	0.15	0.16	0.36
95	TC	319	305	280	256	235	333	319	293	270	254	344	328	303	278	268	352	335	309	285	280
	SHC	130	148	178	207	230	137	160	196	234	254	145	172	214	254	268	153	182	230	273	280
	kW	23.5	23.3	23.0	22.7	22.4	23.8	23.6	23.3	23.0	22.6	24.1	23.8	23.4	23.1	22.9	24.3	24.0	23.6	23.1	23.1
	BF	0.00	0.08	0.13	0.10	0.13	0.13	0.19	0.13	0.12	0.22	0.08	0.17	0.14	0.13	0.30	0.23	0.17	0.15	0.16	0.37
105	TC	309	294	269	246	228	322	307	282	258	244	332	316	290	266	258	339	323	297	274	270
	SHC	125	144	173	202	226	133	156	192	226	244	142	168	209	248	258	149	178	225	264	270
	kW	26.3	26.1	25.9	25.7	25.4	26.6	26.4	26.2	25.9	25.7	26.9	26.7	26.3	26.0	25.8	27.0	26.8	26.4	26.0	26.0
	BF	0.00	0.07	0.12	0.10	0.16	0.10	0.17	0.13	0.12	0.24	0.25	0.16	0.14	0.14	0.33	0.20	0.16	0.15	0.18	0.40
115	TC	296	281	257	235	220	309	293	269	246	235	317	302	277	254	249	324	308	282	262	259
	SHC	120	139	168	196	218	129	151	186	221	235	137	162	203	242	249	144	172	219	254	259
	kW	29.3	29.3	29.4	29.5	29.3	29.7	29.6	29.5	29.5	29.4	30.0	29.8	29.6	29.5	29.4	30.2	29.9	29.7	29.4	29.4
	BF	0.00	0.20	0.12	0.10	0.19	0.08	0.15	0.12	0.12	0.27	0.21	0.15	0.13	0.14	0.35	0.19	0.16	0.15	0.20	0.42

48/50A027 (27 TONS) — STANDARD MODE (cont)

Temp (F) Air Entering Condenser (Edb)		Evaporator Air Quantity — Cfm														
		11,000					12,375					13,750				
		Evaporator Air — Ewb (F)														
		75	72	67	62	57	75	72	67	62	57	75	72	67	62	57
75	TC	384	365	337	311	307	389	371	342	319	316	394	375	346	324	324
	SHC	168	201	254	301	307	174	210	269	309	316	181	219	284	324	324
	kW	19.9	19.6	19.0	18.6	18.5	20.0	19.7	19.1	18.7	18.7	20.1	19.8	19.2	18.8	18.8
	BF	0.23	0.18	0.17	0.18	0.40	0.22	0.19	0.18	0.24	0.45	0.22	0.20	0.19	0.27	0.49
85	TC	370	353	326	302	299	375	358	331	309	307	380	362	334	315	315
	SHC	163	196	250	294	299	170	206	265	301	307	176	215	279	315	315
	kW	22.0	21.7	21.2	20.8	20.7	22.1	21.8	21.3	20.9	20.8	22.2	21.9	21.3	21.0	21.0
	BF	0.22	0.18	0.17	0.19	0.41	0.21	0.19	0.18	0.26	0.46	0.21	0.20	0.19	0.29	0.51
95	TC	358	342	315	292	290	363	346	319	299	298	368	350	322	306	305
	SHC	160	192	245	284	290	166	202	260	295	298	173	211	275	306	305
	kW	24.4	24.1	23.7	23.3	23.2	24.5	24.2	23.8	23.4	23.4	24.7	24.3	23.8	23.5	23.5
	BF	0.21	0.18	0.16	0.22	0.43	0.20	0.19	0.18	0.27	0.48	0.21	0.19	0.19	0.31	0.52
105	TC	345	328	301	281	280	350	332	305	288	288	353	336	308	295	295
	SHC	155	188	240	275	280	162	197	255	285	288	168	206	269	295	295
	kW	27.2	26.9	26.5	26.1	26.1	27.4	27.1	26.6	26.2	26.3	27.5	27.1	26.6	26.4	26.4
	BF	0.20	0.17	0.16	0.24	0.45	0.20	0.18	0.18	0.28	0.50	0.20	0.20	0.19	0.35	0.54
115	TC	329	312	287	268	268	333	316	290	276	276	336	320	293	283	282
	SHC	151	183	235	268	268	157	192	250	276	276	163	201	263	283	282
	kW	30.4	30.0	29.7	29.5	29.5	30.6	30.2	29.7	29.5	29.5	30.7	30.3	29.8	29.6	29.6
	BF	0.19	0.16	0.16	0.23	0.47	0.19	0.18	0.17	0.31	0.52	0.19	0.19	0.19	0.37	0.56

See legend on page 58.

COOLING CAPACITIES (cont)

48/50A027 (27 TONS) — SUBCOOLING MODE

Temp (F) Air Entering Condenser (Edb)		Evaporator Air Quantity – SCFM																			
		5,400					6,750					8,100					9,450				
		Evaporator Air Ewb (F)																			
		75	72	67	62	57	75	72	67	62	57	75	72	67	62	57	75	72	67	62	57
75	TC	329	312	279	257	232	343	320	292	265	251	363	343	313	284	263	360	343	312	286	271
	SHC	117	135	159	190	215	121	138	172	206	245	137	159	198	236	263	131	159	204	251	271
	kW	17.7	17.5	16.8	16.6	16.3	17.8	17.5	17.0	16.6	16.7	18.4	18.0	17.4	16.9	16.6	18.2	17.8	17.5	17.0	16.7
	BF	0.00	0.03	0.08	0.09	0.09	0.01	0.08	0.10	0.11	0.15	0.06	0.11	0.12	0.13	0.22	0.10	0.13	0.14	0.15	0.30
85	TC	311	295	267	234	211	329	310	284	258	227	342	324	295	269	242	339	322	305	278	255
	SHC	103	122	150	189	196	112	132	168	202	222	120	144	184	225	242	114	143	200	246	255
	kW	19.6	19.4	18.9	18.2	17.8	20.0	19.6	19.3	18.8	18.0	20.2	19.9	19.3	18.9	18.3	20.0	19.7	19.5	19.1	18.5
	BF	0.00	0.04	0.08	0.09	0.10	0.02	0.08	0.10	0.11	0.17	0.06	0.11	0.12	0.13	0.23	0.10	0.13	0.14	0.15	0.31
95	TC	283	267	242	219	197	309	292	266	233	213	316	293	267	243	237	329	309	284	260	251
	SHC	78	97	127	156	184	96	117	153	180	208	98	117	160	201	237	109	134	184	230	251
	kW	21.4	21.1	20.6	20.2	19.8	22.1	21.7	21.2	20.5	20.1	22.1	21.6	21.1	20.7	20.8	22.5	22.0	21.5	21.1	21.1
	BF	0.00	0.05	0.08	0.08	0.09	0.02	0.08	0.10	0.11	0.18	0.07	0.11	0.12	0.13	0.25	0.11	0.14	0.14	0.16	0.33
105	TC	275	260	229	204	192	278	263	247	217	208	294	282	258	236	222	299	289	265	241	233
	SHC	74	93	116	144	179	69	92	137	166	204	81	110	154	197	222	84	118	168	215	233
	kW	24.2	23.8	23.0	22.5	22.5	24.0	23.7	23.5	22.8	22.8	24.4	24.2	23.8	23.3	23.1	24.5	24.3	23.9	23.4	23.3
	BF	0.00	0.05	0.08	0.08	0.12	0.03	0.09	0.10	0.11	0.19	0.08	0.11	0.12	0.13	0.26	0.11	0.14	0.14	0.16	0.34
115	TC	245	241	217	196	169	267	251	230	200	192	276	253	230	209	196	283	267	245	216	216
	SHC	48	78	108	139	157	63	84	124	152	189	67	85	130	172	196	72	101	152	189	216
	kW	26.4	26.4	25.9	25.5	24.7	27.0	26.6	26.1	25.4	25.4	27.2	26.5	26.0	25.6	25.3	27.3	27.0	26.4	25.7	25.9
	BF	0.00	0.05	0.08	0.08	0.13	0.03	0.09	0.10	0.11	0.20	0.08	0.11	0.12	0.14	0.28	0.11	0.14	0.14	0.19	0.36

48/50A027 (27 TONS) — SUBCOOLING MODE (cont)

Temp (F) Air Entering Condenser (Edb)		Evaporator Air Quantity – SCFM														
		10,800					12,150					13,500				
		Evaporator Air Ewb (F)														
		75	72	67	62	57	75	72	67	62	57	75	72	67	62	57
75	TC	368	351	332	302	284	375	359	338	311	302	393	374	343	315	303
	SHC	137	169	232	278	284	144	181	246	298	302	163	199	260	309	303
	kW	18.2	18.0	17.8	17.3	16.9	18.4	18.0	17.9	17.5	17.2	18.9	18.5	18.0	17.5	17.2
	BF	0.13	0.15	0.16	0.18	0.36	0.15	0.17	0.18	0.20	0.42	0.17	0.19	0.19	0.25	0.46
85	TC	346	329	302	284	276	351	340	317	288	288	356	340	312	288	286
	SHC	120	152	205	263	276	126	167	229	275	288	131	170	233	283	286
	kW	20.1	19.8	19.4	19.2	19.1	20.2	20.0	19.7	19.1	19.3	20.2	20.0	19.5	19.1	19.1
	BF	0.13	0.16	0.16	0.18	0.38	0.15	0.17	0.18	0.23	0.43	0.18	0.19	0.19	0.27	0.47
95	TC	328	317	290	267	250	342	324	295	264	269	345	329	300	270	278
	SHC	107	144	198	247	250	121	155	211	252	269	125	164	225	265	278
	kW	22.2	22.1	21.7	21.3	20.8	22.8	22.3	21.7	21.1	21.3	22.7	22.4	21.8	21.2	21.5
	BF	0.13	0.16	0.16	0.20	0.39	0.16	0.17	0.18	0.24	0.44	0.18	0.19	0.19	0.28	0.49
105	TC	310	295	262	240	244	306	301	274	255	242	310	295	271	257	250
	SHC	94	127	174	221	244	90	137	194	244	242	95	135	201	255	250
	kW	24.8	24.5	23.7	23.3	23.5	24.6	24.6	24.0	23.7	23.3	24.7	24.4	23.9	23.7	23.5
	BF	0.14	0.16	0.16	0.22	0.40	0.16	0.17	0.18	0.26	0.45	0.18	0.19	0.19	0.29	0.50
115	TC	288	273	242	222	226	295	277	253	237	234	296	281	257	241	241
	SHC	77	110	158	204	226	84	117	178	228	234	86	126	191	241	241
	kW	27.4	27.1	26.3	25.8	26.1	27.7	27.1	26.6	26.3	26.3	27.6	27.3	26.7	26.4	26.4
	BF	0.14	0.16	0.16	0.23	0.42	0.16	0.17	0.18	0.27	0.47	0.18	0.19	0.20	0.30	0.51

See legend on page 58.

Performance data (cont)

COOLING CAPACITIES (cont)

50A027 (27 TONS) — HOT GAS REHEAT MODE

Temp (F) Air Entering Condenser (Edb)		Air Entering Evaporator — Ewb (F)													
		75 Dry Bulb							75 Dry Bulb						
		62.5 Wet Bulb (50% RH)							65.3 Wet Bulb (60% RH)						
		Air Entering Evaporator — SCFM													
		5,400	6,750	8,100	9,450	10,800	12,150	13,500	5,400	6,750	8,100	9,450	10,800	12,150	13,500
40	TC	73	84	91	97	101	104	106	77	89	97	103	107	110	113
	SHC	–18	–6	7	18	29	41	51	–42	–33	–25	–16	–9	–1	8
	kW	18.8	17.7	17.0	16.7	16.4	16.3	16.1	19.9	18.6	17.8	17.4	17.1	16.9	16.7
	BF	0.05	0.07	0.08	0.10	0.11	0.13	0.14	0.04	0.06	0.08	0.10	0.11	0.13	0.14
50	TC	67	77	84	89	92	95	97	71	82	89	94	98	101	104
	SHC	–22	–9	2	14	25	36	47	–46	–37	–29	–21	–13	–5	3
	kW	19.3	18.2	17.5	17.2	16.9	16.7	16.6	20.4	19.1	18.3	17.9	17.6	17.3	17.2
	BF	0.05	0.07	0.08	0.10	0.11	0.13	0.14	0.04	0.06	0.08	0.10	0.11	0.13	0.14
60	TC	62	72	78	82	85	87	89	66	76	82	87	90	93	95
	SHC	–25	–13	–1	10	21	32	43	–49	–41	–33	–25	–17	–9	–1
	kW	19.9	18.7	18.0	17.7	17.4	17.2	17.1	20.9	19.6	18.8	18.4	18.1	17.8	17.7
	BF	0.05	0.07	0.08	0.10	0.11	0.13	0.14	0.04	0.06	0.08	0.10	0.11	0.13	0.14
70	TC	57	66	71	75	78	80	81	60	69	75	79	82	85	87
	SHC	–28	–16	–5	6	17	28	39	–53	–44	–36	–28	–21	–13	–5
	kW	20.5	19.3	18.6	18.2	18.0	17.8	17.6	21.6	20.2	19.4	18.9	18.6	18.4	18.2
	BF	0.05	0.07	0.08	0.10	0.11	0.13	0.14	0.04	0.06	0.08	0.10	0.11	0.13	0.14
75	TC	54	63	69	72	75	77	79	57	67	73	77	79	82	83
	SHC	–30	–18	–6	5	16	27	37	–54	–46	–38	–30	–22	–15	–7
	kW	20.9	19.6	18.9	18.5	18.3	18.1	17.9	21.9	20.5	19.7	19.2	18.9	18.7	18.5
	BF	0.05	0.07	0.08	0.10	0.11	0.13	0.14	0.04	0.06	0.08	0.10	0.11	0.13	0.14
80	TC	52	61	66	70	72	74	76	55	64	70	74	77	79	80
	SHC	–31	–19	–8	3	14	25	36	–55	–47	–39	–31	–24	–16	–8
	kW	21.2	20.0	19.3	18.9	18.6	18.4	18.2	22.2	20.8	20.0	19.6	19.2	19.0	18.8
	BF	0.05	0.07	0.08	0.10	0.11	0.13	0.14	0.04	0.06	0.08	0.10	0.11	0.13	0.14

50A027 (27 TONS) — HOT GAS REHEAT MODE (cont)

Temp (F) Air Entering Condenser (Edb)		Air Entering Evaporator — Ewb (F)													
		75 Dry Bulb							75 Dry Bulb						
		68.0 Wet Bulb (70% RH)							70.5 Wet Bulb (80% RH)						
		Air Entering Evaporator — SCFM													
		5,400	6,750	8,100	9,450	10,800	12,150	13,500	5,400	6,750	8,100	9,450	10,800	12,150	13,500
40	TC	81	94	103	109	113	117	120	85	99	108	114	119	123	126
	SHC	–66	–61	–56	–51	–46	–41	–36	–89	–87	–85	–83	–81	–79	–77
	kW	21.0	19.5	18.7	18.1	17.8	17.5	17.3	22.2	20.5	19.5	18.9	18.5	18.2	17.9
	BF	0.02	0.04	0.07	0.09	0.11	0.12	0.14	0.00	0.01	0.03	0.06	0.08	0.11	0.13
50	TC	75	86	94	100	104	108	110	78	91	99	105	110	113	116
	SHC	–70	–65	–60	–55	–50	–45	–40	–93	–91	–89	–87	–86	–83	–81
	kW	21.6	20.0	19.1	18.6	18.2	18.0	17.8	22.7	21.0	20.0	19.4	18.9	18.6	18.4
	BF	0.02	0.05	0.07	0.09	0.11	0.12	0.14	0.00	0.01	0.03	0.06	0.09	0.11	0.13
60	TC	69	79	87	92	96	99	101	72	84	92	97	101	105	107
	SHC	–73	–69	–64	–59	–54	–49	–44	–97	–95	–93	–91	–89	–87	–85
	kW	22.1	20.6	19.7	19.1	18.7	18.5	18.3	23.3	21.5	20.5	19.9	19.4	19.1	18.9
	BF	0.02	0.05	0.07	0.09	0.11	0.13	0.14	0.00	0.01	0.03	0.07	0.09	0.11	0.13
70	TC	63	73	79	84	88	91	93	66	77	84	90	94	97	99
	SHC	–76	–72	–67	–63	–58	–53	–48	–99	–98	–97	–95	–93	–91	–89
	kW	22.7	21.1	20.2	19.7	19.3	19.0	18.8	23.9	22.1	21.1	20.4	20.0	19.7	19.4
	BF	0.02	0.05	0.07	0.09	0.11	0.13	0.14	0.00	0.01	0.04	0.07	0.09	0.11	0.13
75	TC	60	70	77	81	84	87	89	63	74	80	85	89	92	94
	SHC	–78	–73	–69	–64	–60	–55	–50	–101	–100	–98	–97	–95	–93	–91
	kW	23.0	21.4	20.5	20.0	19.6	19.3	19.1	24.2	22.4	21.4	20.7	20.3	20.0	19.7
	BF	0.02	0.05	0.07	0.09	0.11	0.13	0.14	0.00	0.01	0.04	0.07	0.09	0.11	0.13
80	TC	58	68	74	78	81	83	85	60	71	78	82	86	88	91
	SHC	–80	–75	–70	–66	–61	–56	–52	–103	–101	–100	–98	–97	–95	–93
	kW	23.4	21.8	20.9	20.3	19.9	19.6	19.4	24.6	22.8	21.7	21.0	20.6	20.3	20.0
	BF	0.02	0.05	0.07	0.09	0.11	0.13	0.14	0.00	0.01	0.04	0.07	0.09	0.12	0.13

See legend on page 58.

COOLING CAPACITIES (cont)

48/50A030 (30 TONS) — STANDARD MODE

Temp (F) Air Entering Condenser (Edb)		Evaporator Air Quantity — Cfm																			
		6,000					7,500					9,000					10,500				
		Evaporator Air — Ewb (F)																			
		75	72	67	62	57	75	72	67	62	57	75	72	67	62	57	75	72	67	62	57
75	TC	370	354	325	298	272	389	371	342	314	293	401	384	354	325	309	411	392	362	334	323
	SHC	151	169	203	234	263	157	184	224	262	287	167	196	243	288	309	176	208	261	311	323
	kW	20.2	19.9	19.5	19.2	18.8	20.6	20.3	19.8	19.4	18.9	20.9	20.6	20.1	19.6	19.3	21.1	20.7	20.2	19.8	19.5
	BF	0.00	0.00	0.12	0.10	0.10	0.00	0.19	0.12	0.11	0.20	0.13	0.16	0.13	0.12	0.26	0.22	0.16	0.14	0.14	0.34
85	TC	362	345	316	288	263	379	361	332	303	276	391	373	343	314	300	400	381	351	322	315
	SHC	147	166	199	230	257	154	180	219	257	276	164	193	238	282	300	172	204	256	305	315
	kW	22.8	22.5	22.1	21.8	21.4	23.2	22.9	22.5	22.1	21.6	23.5	23.2	22.7	22.3	22.0	23.7	23.4	22.9	22.4	22.2
	BF	0.00	0.00	0.12	0.09	0.10	0.00	0.17	0.12	0.11	0.13	0.26	0.16	0.13	0.12	0.28	0.21	0.16	0.14	0.14	0.35
95	TC	351	334	305	278	255	367	349	320	292	274	379	360	330	302	291	387	368	338	310	305
	SHC	143	162	194	225	250	151	176	214	252	274	160	188	233	277	291	168	200	251	298	305
	kW	25.7	25.5	25.1	25.1	24.7	26.1	25.9	25.5	25.3	25.0	26.4	26.2	25.8	25.4	25.1	26.7	26.3	25.9	25.4	25.3
	BF	0.00	0.10	0.11	0.09	0.12	0.00	0.16	0.12	0.10	0.21	0.23	0.15	0.13	0.12	0.30	0.19	0.15	0.14	0.15	0.37
105	TC	339	322	293	267	247	353	336	307	280	265	364	346	317	290	281	372	353	324	297	294
	SHC	138	157	189	219	242	147	171	209	246	265	155	183	228	271	281	163	195	246	291	294
	kW	29.0	28.9	29.0	29.3	28.7	29.3	29.3	29.3	29.4	29.1	29.8	29.5	29.4	29.3	29.0	30.1	29.6	29.5	29.2	29.1
	BF	0.00	0.20	0.11	0.09	0.15	0.13	0.15	0.11	0.10	0.24	0.20	0.14	0.12	0.12	0.33	0.18	0.14	0.14	0.16	0.40
115	TC	326	309	281	256	237	339	322	294	268	256	349	331	303	277	271	356	338	309	286	283
	SHC	132	153	184	214	235	142	166	204	241	256	150	178	222	264	271	158	190	240	280	283
	kW	32.8	33.1	33.8	34.3	34.3	33.3	33.4	33.8	34.2	34.0	33.8	33.5	33.8	34.0	33.8	34.1	34.0	33.8	33.5	33.7
	BF	0.00	0.16	0.10	0.08	0.16	0.24	0.13	0.11	0.10	0.26	0.18	0.13	0.12	0.13	0.35	0.17	0.14	0.13	0.19	0.42

48/50A030 (30 TONS) — STANDARD MODE (cont)

Temp (F) Air Entering Condenser (Edb)		Evaporator Air Quantity — Cfm														
		12,000					13,500					15,000				
		Evaporator Air — Ewb (F)														
		75	72	67	62	57	75	72	67	62	57	75	72	67	62	57
75	TC	419	399	369	340	336	426	406	374	347	346	430	411	379	356	354
	SHC	183	219	278	330	336	191	229	294	343	346	198	240	310	351	354
	kW	21.3	20.9	20.4	19.9	19.7	21.4	21.0	20.5	19.9	19.9	21.5	21.1	20.6	20.1	20.1
	BF	0.20	0.16	0.15	0.17	0.40	0.20	0.18	0.16	0.22	0.45	0.20	0.18	0.17	0.28	0.49
85	TC	408	388	357	329	326	414	394	362	338	336	418	398	366	344	345
	SHC	180	215	273	322	326	187	226	290	331	336	194	236	305	337	345
	kW	23.9	23.5	23.0	22.5	22.4	24.0	23.7	23.1	22.6	22.6	24.1	23.8	23.2	22.7	22.8
	BF	0.19	0.16	0.15	0.19	0.41	0.19	0.17	0.16	0.26	0.46	0.19	0.18	0.17	0.28	0.50
95	TC	394	375	344	318	316	399	380	348	328	326	403	384	352	334	334
	SHC	175	211	268	312	316	182	221	284	320	326	189	231	300	334	334
	kW	26.9	26.6	26.0	25.4	25.5	27.0	26.7	26.1	25.6	25.6	27.2	26.8	26.2	25.8	25.8
	BF	0.18	0.16	0.15	0.21	0.43	0.18	0.17	0.16	0.28	0.48	0.19	0.18	0.17	0.31	0.52
105	TC	378	359	329	307	305	383	364	334	314	314	387	367	337	322	322
	SHC	170	205	262	301	305	177	215	278	314	314	184	225	294	322	322
	kW	30.3	30.0	29.6	29.0	29.2	30.5	30.1	29.6	29.3	29.3	30.7	30.2	29.7	29.4	29.3
	BF	0.17	0.16	0.15	0.24	0.45	0.18	0.17	0.16	0.28	0.50	0.18	0.18	0.17	0.34	0.54
115	TC	361	343	314	295	293	366	347	318	302	302	369	351	321	310	309
	SHC	165	200	257	290	293	172	210	272	302	302	179	220	288	310	309
	kW	34.4	34.2	33.9	33.4	33.6	34.7	34.3	33.9	33.6	33.6	34.9	34.4	33.9	33.7	33.7
	BF	0.17	0.16	0.15	0.26	0.47	0.17	0.17	0.16	0.31	0.52	0.18	0.18	0.18	0.36	0.56

See legend on page 58.

Performance data (cont)

COOLING CAPACITIES (cont)

48/50A030 (30 TONS) — SUBCOOLING MODE

Temp (F) Air Entering Condenser (Edb)		Evaporator Air Quantity – SCFM																			
		6,000					7,500					9,000					10,500				
		Evaporator Air Ewb (F)																			
		75	72	67	62	57	75	72	67	62	57	75	72	67	62	57	75	72	67	62	57
75	TC	347	329	302	276	248	360	342	314	292	265	373	355	329	304	285	387	367	337	313	298
	SHC	126	146	178	208	234	132	155	193	235	260	140	167	215	260	285	152	181	231	282	298
	kW	19.8	19.4	18.9	18.5	18.1	20.1	19.7	19.2	18.8	18.3	20.3	20.0	19.4	19.0	18.7	20.6	20.2	19.6	19.1	18.9
	BF	0.00	0.05	0.09	0.10	0.11	0.02	0.09	0.11	0.12	0.17	0.08	0.12	0.14	0.14	0.25	0.12	0.15	0.16	0.17	0.33
85	TC	326	309	285	262	239	345	322	301	277	251	354	337	311	287	271	365	347	318	295	285
	SHC	109	130	164	197	226	121	139	183	223	247	126	153	200	246	271	135	165	215	267	285
	kW	22.0	21.6	21.2	20.8	20.5	22.3	21.9	21.4	21.0	20.6	22.5	22.2	21.6	21.2	21.0	22.7	22.4	21.8	21.3	21.2
	BF	0.00	0.05	0.09	0.09	0.11	0.03	0.10	0.11	0.12	0.18	0.08	0.12	0.14	0.14	0.27	0.12	0.15	0.16	0.17	0.34
95	TC	309	294	267	243	224	325	308	282	259	242	335	319	293	270	252	343	327	300	276	269
	SHC	97	118	149	182	214	105	129	168	209	239	112	140	186	232	252	119	150	202	251	269
	kW	24.6	24.2	23.8	23.4	23.1	24.9	24.5	24.0	23.6	23.4	25.1	24.7	24.2	23.8	23.5	25.3	24.9	24.3	23.9	23.8
	BF	0.00	0.06	0.09	0.09	0.11	0.04	0.10	0.11	0.12	0.19	0.09	0.13	0.14	0.14	0.28	0.12	0.15	0.16	0.17	0.35
105	TC	295	257	236	228	210	305	278	264	242	227	315	295	274	252	241	323	307	284	259	253
	SHC	87	86	122	170	201	90	103	155	195	225	97	121	172	219	241	104	135	191	239	253
	kW	27.6	26.9	26.5	26.4	26.3	27.8	27.3	27.0	26.6	26.4	28.0	27.6	27.2	26.8	26.6	28.2	27.8	27.3	26.9	26.8
	BF	0.00	0.06	0.09	0.09	0.13	0.04	0.10	0.11	0.12	0.21	0.09	0.13	0.14	0.15	0.29	0.13	0.15	0.16	0.17	0.37
115	TC	271	254	233	212	196	274	268	246	223	207	293	279	256	233	224	287	286	262	241	235
	SHC	69	88	124	157	187	66	99	141	180	207	81	111	159	203	224	73	120	174	220	235
	kW	30.9	30.6	30.3	30.0	29.9	31.0	30.8	30.4	30.1	29.9	31.4	31.0	30.5	30.2	30.1	31.2	31.1	30.6	30.2	30.2
	BF	0.01	0.07	0.09	0.09	0.15	0.05	0.10	0.11	0.12	0.21	0.10	0.13	0.14	0.15	0.31	0.13	0.15	0.16	0.20	0.38

48/50A030 (30 TONS) — SUBCOOLING MODE (cont)

Temp (F) Air Entering Condenser (Edb)		Evaporator Air Quantity – SCFM														
		12,000					13,500					15,000				
		Evaporator Air Ewb (F)														
		75	72	67	62	57	75	72	67	62	57	75	72	67	62	57
75	TC	395	375	346	320	313	396	381	348	321	322	401	387	355	328	326
	SHC	159	192	248	301	313	160	202	260	311	322	166	211	277	324	326
	kW	20.8	20.4	19.8	19.3	19.1	20.8	20.5	19.8	19.3	19.3	20.9	20.6	19.9	19.4	19.4
	BF	0.14	0.17	0.18	0.20	0.39	0.17	0.19	0.19	0.24	0.45	0.19	0.21	0.21	0.28	0.49
85	TC	369	352	324	298	296	378	357	330	309	306	379	362	334	315	312
	SHC	139	174	231	284	296	149	183	246	300	306	151	192	261	314	312
	kW	22.9	22.5	21.9	21.4	21.4	23.0	22.6	22.0	21.6	21.5	23.1	22.7	22.1	21.7	21.6
	BF	0.15	0.17	0.18	0.19	0.40	0.17	0.19	0.19	0.25	0.45	0.19	0.21	0.21	0.28	0.50
95	TC	350	333	307	285	280	354	338	311	289	286	359	342	315	294	296
	SHC	125	159	218	270	280	130	169	233	280	286	137	178	247	294	296
	kW	25.4	25.0	24.5	24.0	24.0	25.5	25.1	24.6	24.1	24.1	25.6	25.2	24.6	24.2	24.2
	BF	0.15	0.17	0.18	0.21	0.41	0.17	0.19	0.19	0.26	0.46	0.19	0.21	0.21	0.29	0.51
105	TC	331	315	273	266	260	337	301	294	274	271	341	321	296	278	277
	SHC	112	147	189	252	260	119	137	221	267	271	124	162	233	278	277
	kW	28.4	28.0	27.2	27.0	26.9	28.5	27.8	27.5	27.1	27.1	28.6	28.1	27.5	27.2	27.2
	BF	0.15	0.17	0.18	0.23	0.43	0.17	0.19	0.19	0.27	0.48	0.19	0.21	0.21	0.31	0.52
115	TC	307	291	268	248	243	311	295	271	254	251	313	299	274	258	258
	SHC	94	129	190	235	243	99	138	203	248	251	104	147	217	258	258
	kW	31.7	31.3	30.7	30.3	30.3	31.8	31.4	30.8	30.4	30.4	31.9	31.4	30.8	30.5	30.5
	BF	0.15	0.17	0.17	0.24	0.44	0.18	0.19	0.19	0.28	0.49	0.20	0.21	0.21	0.32	0.53

See legend on page 58.

COOLING CAPACITIES (cont)

50A030 (30 TONS) — HOT GAS REHEAT MODE

Temp (F) Air Entering Condenser (Edb)		Air Entering Evaporator — Ewb (F)													
		75 Dry Bulb							75 Dry Bulb						
		62.5 Wet Bulb (50% RH)							65.3 Wet Bulb (60% RH)						
		Air Entering Evaporator — SCFM													
		6,000	7,500	9,000	10,500	12,000	13,500	15,000	6,000	7,500	9,000	10,500	12,000	13,500	15,000
40	TC	138	148	154	159	164	167	169	145	155	162	168	172	176	179
	SHC	35	48	61	73	86	99	111	10	19	28	38	47	56	66
	kW	17.0	16.7	16.6	16.5	16.5	16.5	16.5	17.8	17.4	17.3	17.2	17.1	17.1	17.1
	BF	0.07	0.09	0.11	0.12	0.14	0.16	0.17	0.06	0.08	0.10	0.12	0.14	0.16	0.17
50	TC	133	142	149	153	157	159	161	139	149	156	161	165	168	170
	SHC	31	44	57	70	83	95	107	7	16	25	34	43	52	62
	kW	17.9	17.5	17.4	17.3	17.3	17.3	17.3	18.7	18.2	18.1	18.0	17.9	17.9	17.9
	BF	0.07	0.09	0.11	0.12	0.14	0.16	0.17	0.06	0.08	0.10	0.12	0.14	0.16	0.17
60	TC	127	136	142	147	150	153	155	133	143	150	154	158	161	163
	SHC	28	41	54	67	79	92	104	3	12	21	30	40	49	58
	kW	18.8	18.5	18.3	18.2	18.2	18.2	18.1	19.6	19.2	19.0	18.8	18.8	18.7	18.7
	BF	0.07	0.09	0.11	0.12	0.14	0.16	0.17	0.06	0.08	0.10	0.12	0.14	0.16	0.17
70	TC	120	129	135	140	143	145	147	127	136	143	147	151	153	155
	SHC	24	37	50	63	75	88	100	0	9	18	27	36	45	54
	kW	19.9	19.5	19.3	19.2	19.2	19.1	19.1	20.7	20.2	20.0	19.8	19.8	19.7	19.7
	BF	0.07	0.09	0.11	0.12	0.14	0.16	0.17	0.06	0.08	0.10	0.12	0.14	0.16	0.17
75	TC	117	126	132	136	139	142	143	124	133	139	143	147	149	151
	SHC	22	35	48	61	74	86	98	–2	7	16	25	34	43	52
	kW	20.5	20.1	19.9	19.8	19.7	19.7	19.7	21.3	20.8	20.5	20.4	20.3	20.2	20.2
	BF	0.07	0.09	0.11	0.12	0.14	0.16	0.17	0.06	0.08	0.10	0.12	0.14	0.16	0.17
80	TC	114	123	128	133	136	138	139	120	129	135	140	143	145	147
	SHC	20	33	46	59	72	84	96	–4	5	14	23	32	41	51
	kW	21.1	20.7	20.5	20.4	20.3	20.3	20.2	21.9	21.4	21.1	21.0	20.9	20.8	20.8
	BF	0.07	0.09	0.11	0.12	0.14	0.16	0.17	0.06	0.08	0.10	0.12	0.14	0.16	0.17

50A030 (30 TONS) — HOT GAS REHEAT MODE (cont)

Temp (F) Air Entering Condenser (Edb)		Air Entering Evaporator — Ewb (F)													
		75 Dry Bulb							75 Dry Bulb						
		68.0 Wet Bulb (70% RH)							70.5 Wet Bulb (80% RH)						
		Air Entering Evaporator — SCFM													
		6,000	7,500	9,000	10,500	12,000	13,500	15,000	6,000	7,500	9,000	10,500	12,000	13,500	15,000
40	TC	151	162	170	176	181	185	188	158	170	178	184	189	193	196
	SHC	–14	–9	–3	2	8	14	20	–38	–35	–33	–31	–28	–25	–22
	kW	18.6	18.2	18.0	17.8	17.8	17.7	17.7	19.5	19.0	18.7	18.5	18.4	18.3	18.3
	BF	0.02	0.06	0.09	0.12	0.14	0.16	0.17	0.00	0.00	0.04	0.08	0.11	0.14	0.16
50	TC	146	156	163	169	173	176	179	152	163	171	176	181	184	187
	SHC	–17	–12	–7	–1	4	10	16	–41	–39	–37	–34	–32	–29	–26
	kW	19.5	19.0	18.7	18.6	18.5	18.5	18.4	20.4	19.8	19.4	19.3	19.2	19.1	19.0
	BF	0.02	0.06	0.09	0.12	0.14	0.16	0.17	0.00	0.00	0.05	0.09	0.11	0.14	0.16
60	TC	140	150	157	162	166	169	171	146	156	164	169	173	176	179
	SHC	–21	–16	–10	–5	1	7	13	–44	–42	–40	–38	–35	–33	–30
	kW	20.4	19.9	19.6	19.5	19.4	19.3	19.3	21.3	20.7	20.3	20.1	20.0	19.9	19.9
	BF	0.03	0.07	0.09	0.12	0.14	0.16	0.17	0.00	0.00	0.05	0.09	0.12	0.14	0.16
70	TC	133	143	150	155	158	161	163	139	150	157	162	166	169	171
	SHC	–24	–19	–14	–8	–3	3	9	–48	–45	–44	–41	–39	–36	–33
	kW	21.5	20.9	20.6	20.5	20.4	20.3	20.2	22.3	21.7	21.3	21.1	21.0	20.9	20.8
	BF	0.03	0.07	0.09	0.12	0.14	0.16	0.17	0.00	0.01	0.06	0.09	0.12	0.14	0.16
75	TC	130	140	146	151	154	157	159	136	146	153	158	162	165	167
	SHC	–26	–21	–16	–10	–5	1	7	–49	–47	–45	–43	–41	–38	–35
	kW	22.1	21.5	21.2	21.0	20.9	20.8	20.8	22.9	22.2	21.9	21.6	21.5	21.4	21.4
	BF	0.04	0.07	0.09	0.12	0.14	0.16	0.17	0.00	0.01	0.06	0.09	0.12	0.14	0.16
80	TC	127	136	142	147	150	153	155	132	142	149	154	158	161	163
	SHC	–28	–23	–18	–12	–6	–1	5	–51	–49	–47	–45	–43	–40	–37
	kW	22.7	22.1	21.8	21.6	21.5	21.4	21.4	23.5	22.8	22.4	22.2	22.1	22.0	21.9
	BF	0.04	0.07	0.10	0.12	0.14	0.16	0.17	0.00	0.02	0.06	0.09	0.12	0.14	0.16

See legend on page 58.

Performance data (cont)

COOLING CAPACITIES (cont)

48/50A035 (35 TONS) — STANDARD MODE

Temp (F) Air Entering Condenser (Edb)		Evaporator Air Quantity — Cfm																			
		7,000					8,750					10,500					12,250				
		Evaporator Air — Ewb (F)																			
		75	72	67	62	57	75	72	67	62	57	75	72	67	62	57	75	72	67	62	57
75	TC	442	423	394	366	338	459	440	410	383	363	471	452	421	395	383	479	460	430	403	399
	SHC	179	206	250	291	329	189	222	275	327	363	199	237	299	359	383	208	252	323	389	399
	kW	24.8	24.3	23.6	23.2	23.1	25.3	24.7	24.0	23.4	23.2	25.6	25.1	24.3	23.6	23.4	25.8	25.3	24.5	23.8	23.7
	BF	0.00	0.00	0.00	0.01	0.02	0.00	0.00	0.01	0.01	0.10	0.01	0.01	0.01	0.02	0.21	0.01	0.02	0.02	0.04	0.29
85	TC	428	412	384	354	326	444	426	399	372	352	455	437	410	384	374	463	444	417	393	389
	SHC	174	201	245	285	322	184	217	270	321	352	193	231	294	354	374	203	246	318	384	389
	kW	27.8	27.3	26.9	26.7	27.0	28.2	27.7	27.1	26.8	26.7	28.5	28.0	27.3	26.9	26.8	28.8	28.2	27.5	27.0	26.9
	BF	0.00	0.00	0.01	0.01	0.02	0.00	0.00	0.01	0.01	0.13	0.01	0.01	0.01	0.03	0.23	0.02	0.02	0.02	0.05	0.31
95	TC	417	400	371	341	312	432	415	387	358	341	441	424	397	370	362	447	431	405	380	378
	SHC	170	197	239	279	312	179	212	265	314	341	188	227	289	348	362	197	241	313	376	378
	kW	31.3	31.1	30.8	31.3	32.9	31.6	31.2	30.9	30.8	31.2	31.9	31.4	31.0	30.8	30.7	32.1	31.6	31.0	30.8	30.8
	BF	0.00	0.00	0.01	0.01	0.03	0.00	0.00	0.01	0.01	0.16	0.01	0.01	0.02	0.03	0.25	0.02	0.02	0.02	0.05	0.33
105	TC	403	385	356	325	308	417	400	372	343	328	427	410	381	355	349	433	417	389	365	365
	SHC	165	191	232	271	308	174	207	258	307	328	184	222	283	340	349	193	236	307	365	365
	kW	35.5	35.4	36.0	37.7	39.3	35.7	35.5	35.5	36.5	37.4	35.9	35.5	35.3	35.8	36.1	36.0	35.6	35.3	35.5	35.5
	BF	0.00	0.00	0.01	0.01	0.12	0.00	0.01	0.01	0.02	0.19	0.01	0.01	0.02	0.03	0.28	0.02	0.02	0.02	0.07	0.35
115	TC	380	364	337	—	—	391	376	351	—	—	398	384	360	335	332	403	389	366	347	347
	SHC	156	182	224	—	—	165	198	250	—	—	174	213	274	330	332	183	227	298	347	347
	kW	39.4	39.7	40.9	—	—	39.5	39.5	40.1	—	—	39.5	39.4	39.8	40.9	41.1	39.6	39.4	39.6	40.2	40.2
	BF	0.00	0.00	0.01	—	—	0.00	0.01	0.01	—	—	0.01	0.01	0.02	0.04	0.31	0.01	0.02	0.02	0.12	0.39

48/50A035 (35 TONS) — STANDARD MODE (cont)

Temp (F) Air Entering Condenser (Edb)		Evaporator Air Quantity — Cfm														
		14,000					15,750					17,500				
		Evaporator Air — Ewb (F)														
		75	72	67	62	57	75	72	67	62	57	75	72	67	62	57
75	TC	485	466	436	412	411	490	471	442	422	422	—	475	446	432	432
	SHC	217	266	347	411	411	226	281	369	422	422	—	295	391	432	432
	kW	26.0	25.5	24.7	24.0	24.0	26.1	25.6	24.8	24.3	24.3	—	25.7	24.9	24.5	24.5
	BF	0.02	0.02	0.03	0.09	0.36	0.03	0.03	0.04	0.17	0.42	—	0.04	0.05	0.23	0.46
85	TC	469	451	422	402	401	—	455	426	411	411	—	459	431	419	419
	SHC	212	261	341	402	401	—	275	363	411	411	—	290	384	419	419
	kW	29.0	28.4	27.6	27.1	27.1	—	28.6	27.7	27.3	27.3	—	28.7	27.8	27.5	27.5
	BF	0.02	0.02	0.03	0.11	0.38	—	0.03	0.04	0.19	0.43	—	0.04	0.05	0.26	0.48
95	TC	—	436	410	391	390	—	439	414	401	400	—	443	418	409	408
	SHC	—	256	336	391	390	—	270	358	401	400	—	284	379	409	408
	kW	—	31.7	31.1	30.9	30.9	—	31.8	31.2	31.0	31.0	—	31.9	31.3	31.1	31.1
	BF	—	0.02	0.03	0.13	0.39	—	0.03	0.04	0.21	0.45	—	0.04	0.06	0.27	0.49
105	TC	—	421	394	377	377	—	425	399	387	386	—	428	403	395	395
	SHC	—	251	330	377	377	—	265	352	387	386	—	279	373	395	395
	kW	—	35.7	35.3	35.3	35.3	—	35.7	35.3	35.2	35.2	—	35.8	35.3	35.3	35.3
	BF	—	0.03	0.03	0.16	0.42	—	0.03	0.04	0.24	0.47	—	0.04	0.06	0.30	0.51
115	TC	—	393	371	358	358	—	396	375	367	367	—	399	378	374	374
	SHC	—	242	321	358	358	—	256	342	367	367	—	270	362	374	374
	kW	—	39.4	39.4	39.7	39.7	—	39.5	39.4	39.5	39.5	—	39.5	39.3	39.4	39.4
	BF	—	0.02	0.03	0.21	0.45	—	0.03	0.05	0.28	0.49	—	0.04	0.07	0.34	0.54

LEGEND

BF — Bypass Factor
Edb — Entering Dry Bulb
Ewb — Entering Wet Bulb
kW — Compressor Motor Power Input
RH — Relative Humidity
SCFM — Standard Cubic Feet per Minute
SHC — Sensible Heat Capacity (1000 Btuh)
TC — Total Capacity (1000 Btuh) Gross
VAV — Variable Air Volume

Boldface — VAV Units Only

NOTES:

1. Direct interpolation is permissible. Do not extrapolate.
2. The following formulas may be used:

$$t_{ldb} = t_{edb} - \frac{\text{sensible capacity (Btuh)}}{1.10 \times \text{cfm}}$$

t_{lwb} = Wet-bulb temperature corresponding to enthalpy of air leaving evaporator coil (h_{lwb})

$$h_{lwb} = h_{ewb} - \frac{\text{total capacity (Btuh)}}{4.5 \times \text{cfm}}$$

Where: h_{ewb} = Enthalpy of air entering evaporator coil.

3. The SHC is based on 80°F edb temperature of air entering evaporator coil.
   Below 80°F edb, subtract (corr factor x cfm) from SHC.
   Above 80°F edb, add (corr factor x cfm) to SHC.

BF	ENTERING AIR DRY-BULB TEMP (F)					
	79	78	77	76	75	under 75
	81	*82*	*83*	*84*	*85*	*over 85*
	Correction Factor					
.05	1.04	2.07	3.11	4.14	4.18	Use formula shown below.
.10	.98	1.96	2.94	3.92	4.91	
.20	.87	1.74	2.62	3.49	4.36	

Interpolation is permissible.
Correction Factor = 1.10 x (1 – BF) x (edb – 80).

4. Cooling capacities are gross and do not include deduction for indoor fan motor heat.
5. Variable air volume units will operate down to 70 cfm/ton. Performance at 70 cfm/ton is limited to unloaded operation and may be additionally limited by edb and ewb conditions or Humidi-MiZer® operation.

COOLING CAPACITIES (cont)

48/50A035 (35 TONS) — SUBCOOLING MODE

Temp (F) Air Entering Condenser (Edb)		Evaporator Air Quantity – SCFM																			
		7,000					8,750					10,500					12,250				
		Evaporator Air Ewb (F)																			
		75	72	67	62	57	75	72	67	62	57	75	72	67	62	57	75	72	67	62	57
75	TC	413	378	346	305	268	417	409	369	329	286	450	404	385	346	318	460	433	389	360	345
	SHC	132	145	188	220	249	125	171	216	259	282	153	166	242	294	318	161	199	260	327	345
	kW	23.6	23.0	22.8	22.3	22.0	23.7	23.5	23.0	22.6	21.7	24.1	23.4	23.2	22.7	22.2	24.3	23.9	23.2	22.9	22.8
	BF	0.00	0.00	0.02	0.02	0.03	0.00	0.02	0.02	0.03	0.09	0.02	0.03	0.03	0.04	0.18	0.04	0.04	0.04	0.06	0.27
85	TC	373	356	316	277	240	397	353	337	288	257	393	386	351	314	291	402	377	343	327	304
	SHC	96	126	161	194	224	109	119	187	221	254	101	152	212	265	291	107	146	217	297	304
	kW	25.9	25.8	25.3	25.0	24.7	26.3	25.6	25.5	24.7	24.2	26.3	26.1	25.7	25.2	24.9	26.5	26.0	25.5	25.4	24.9
	BF	0.00	0.01	0.02	0.02	0.03	0.00	0.02	0.02	0.03	0.10	0.02	0.03	0.03	0.04	0.19	0.04	0.04	0.04	0.07	0.28
95	TC	347	324	285	246	200	344	320	303	267	222	355	329	297	280	263	361	337	303	292	272
	SHC	75	98	134	167	184	61	90	158	203	220	67	100	162	235	263	72	112	181	265	272
	kW	29.0	28.7	28.2	27.9	26.8	28.9	28.5	28.4	28.0	27.2	29.1	28.6	28.2	28.1	28.0	29.3	28.8	28.2	28.2	27.8
	BF	0.00	0.01	0.02	0.02	0.05	0.01	0.02	0.02	0.03	0.11	0.02	0.03	0.03	0.05	0.21	0.04	0.04	0.04	0.07	0.29
105	TC	306	281	253	214	182	307	278	269	234	206	314	313	249	247	231	319	296	284	259	250
	SHC	38	60	106	139	168	30	53	129	174	206	31	89	119	206	231	35	75	167	233	250
	kW	32.1	31.7	31.6	31.3	31.2	32.1	31.5	31.7	31.4	31.2	32.3	32.3	31.1	31.5	31.4	32.4	31.9	31.8	31.6	31.5
	BF	0.00	0.01	0.02	0.02	0.07	0.01	0.02	0.02	0.03	0.13	0.02	0.03	0.03	0.05	0.23	0.04	0.04	0.04	0.09	0.31
115	TC	281	249	221	173	143	291	242	226	201	165	272	251	219	213	172	275	253	247	223	204
	SHC	20	34	79	102	130	19	23	91	146	165	–4	33	95	175	172	–3	39	136	199	204
	kW	36.5	35.7	35.7	34.8	34.6	36.5	35.3	35.2	35.5	34.6	36.0	35.4	34.9	35.5	34.4	36.1	35.5	35.5	35.4	34.9
	BF	0.00	0.01	0.02	0.02	0.09	0.01	0.02	0.02	0.03	0.15	0.02	0.03	0.03	0.06	0.24	0.04	0.04	0.04	0.11	0.32

48/50A035 (35 TONS) — SUBCOOLING MODE (cont)

Temp (F) Air Entering Condenser (Edb)		Evaporator Air Quantity – SCFM														
		14,000					15,750					17,500				
		Evaporator Air Ewb (F)														
		75	72	67	62	57	75	72	67	62	57	75	72	67	62	57
75	TC	452	443	399	372	365	460	434	410	383	381	465	438	414	384	394
	SHC	154	214	284	356	365	163	213	311	379	381	171	225	330	384	394
	kW	24.2	24.0	23.4	23.1	23.0	24.4	24.0	23.5	23.2	23.2	24.5	24.1	23.6	23.1	23.4
	BF	0.05	0.05	0.05	0.10	0.34	0.06	0.06	0.07	0.14	0.39	0.08	0.07	0.08	0.20	0.44
85	TC	409	384	351	338	333	415	391	371	349	337	420	394	378	350	358
	SHC	115	159	240	323	333	123	175	276	345	337	131	185	299	350	358
	kW	26.6	26.2	25.7	25.5	25.5	26.8	26.3	25.9	25.7	25.4	26.9	26.4	26.1	25.6	25.9
	BF	0.05	0.05	0.05	0.11	0.35	0.06	0.06	0.07	0.15	0.40	0.08	0.07	0.08	0.21	0.45
95	TC	367	342	299	304	299	371	347	313	304	303	374	351	318	316	323
	SHC	78	122	193	290	299	84	135	221	301	303	91	147	242	316	323
	kW	29.4	28.9	28.1	28.4	28.3	29.5	29.0	28.4	28.3	28.2	29.6	29.1	28.5	28.4	28.6
	BF	0.05	0.05	0.05	0.12	0.36	0.06	0.06	0.07	0.17	0.41	0.08	0.07	0.08	0.22	0.46
105	TC	320	299	291	260	254	325	302	268	278	275	328	305	262	287	281
	SHC	37	85	189	247	254	44	95	182	276	275	50	107	191	287	281
	kW	32.5	32.0	31.9	31.4	31.3	32.7	32.0	31.4	31.8	31.7	32.8	32.1	31.3	31.9	31.7
	BF	0.05	0.05	0.06	0.13	0.37	0.07	0.06	0.07	0.18	0.42	0.08	0.07	0.08	0.24	0.47
115	TC	277	256	227	234	229	279	257	268	238	240	278	256	270	243	249
	SHC	0	48	130	222	229	4	57	188	238	240	7	64	205	243	249
	kW	36.2	35.5	34.9	35.5	35.5	36.4	35.6	36.1	35.5	35.5	36.5	35.6	36.0	35.4	35.6
	BF	0.05	0.05	0.06	0.15	0.38	0.07	0.06	0.07	0.19	0.44	0.08	0.07	0.09	0.26	0.48

See legend on page 58.

Performance data (cont)

COOLING CAPACITIES (cont)

50A035 (35 TONS) — HOT GAS REHEAT MODE

Temp (F) Air Entering Condenser (Edb)		Air Entering Evaporator — Ewb (F)													
		75 Dry Bulb							75 Dry Bulb						
		62.5 Wet Bulb (50% RH)							65.3 Wet Bulb (60% RH)						
		Air Entering Evaporator — SCFM													
		7,000	8,750	10,500	12,250	14,000	15,750	17,500	7,000	8,750	10,500	12,250	14,000	15,750	17,500
40	TC	162	170	176	180	184	186	189	173	182	188	193	197	200	202
	SHC	46	61	77	94	111	128	144	18	27	37	48	60	71	83
	kW	23.4	23.0	22.8	22.7	22.6	22.5	22.4	24.6	24.2	23.9	23.7	23.6	23.5	23.4
	BF	0.00	0.01	0.01	0.02	0.03	0.04	0.05	0.00	0.01	0.01	0.02	0.03	0.04	0.05
50	TC	143	151	156	160	163	165	167	155	163	169	173	177	179	181
	SHC	31	45	61	78	95	111	128	3	12	22	32	44	55	67
	kW	24.1	23.8	23.6	23.4	23.3	23.2	23.2	25.4	24.9	24.7	24.5	24.3	24.3	24.2
	BF	0.00	0.01	0.01	0.02	0.03	0.04	0.05	0.00	0.01	0.01	0.02	0.03	0.04	0.05
60	TC	125	132	137	140	142	144	146	137	144	150	153	156	158	160
	SHC	15	29	45	62	78	95	111	–12	–4	6	16	28	39	51
	kW	24.9	24.6	24.4	24.2	24.1	24.1	24.0	26.2	25.8	25.5	25.3	25.2	25.1	25.0
	BF	0.00	0.01	0.01	0.02	0.03	0.04	0.05	0.00	0.01	0.01	0.02	0.03	0.04	0.05
70	TC	108	114	118	121	123	125	126	118	125	129	132	135	137	139
	SHC	–1	14	29	46	62	79	95	–27	–20	–10	0	11	23	35
	kW	24.8	25.5	25.3	25.1	25.0	25.0	24.9	27.2	26.7	26.4	26.2	26.1	26.0	25.9
	BF	0.01	0.01	0.01	0.02	0.03	0.04	0.05	0.00	0.01	0.01	0.02	0.03	0.04	0.05
75	TC	99	105	108	111	113	114	116	109	115	119	122	125	127	128
	SHC	–7	6	21	38	54	71	87	–35	–27	–18	–8	4	15	27
	kW	26.4	26.0	25.8	25.6	25.5	25.4	25.4	27.7	27.2	26.9	26.7	26.6	26.5	26.4
	BF	0.00	0.01	0.01	0.02	0.03	0.04	0.05	0.00	0.01	0.01	0.02	0.03	0.04	0.05
80	TC	90	96	99	101	103	104	106	100	106	110	112	115	117	118
	SHC	–15	–1	14	30	46	63	78	–43	–35	–26	–16	–4	7	19
	kW	26.9	26.5	26.3	26.2	26.0	26.0	25.9	28.2	27.7	27.4	27.2	27.1	27.0	26.9
	BF	0.00	0.01	0.01	0.02	0.03	0.04	0.05	0.00	0.01	0.01	0.02	0.03	0.04	0.05

50A035 (35 TONS) — HOT GAS REHEAT MODE (cont)

Temp (F) Air Entering Condenser (Edb)		Air Entering Evaporator — Ewb (F)													
		75 Dry Bulb							75 Dry Bulb						
		68.0 Wet Bulb (70% RH)							70.5 Wet Bulb (80% RH)						
		Air Entering Evaporator — SCFM													
		7,000	8,750	10,500	12,250	14,000	15,750	17,500	7,000	8,750	10,500	12,250	14,000	15,750	17,500
40	TC	184	193	200	205	209	212	215	193	204	211	215	220	222	223
	SHC	–10	–8	–4	1	7	13	19	–39	–42	–44	–44	–42	–40	–38
	kW	26.2	25.6	25.4	25.2	25.2	25.1	25.2	28.1	27.7	27.5	27.6	27.8	28.1	28.6
	BF	0.00	0.01	0.02	0.03	0.04	0.06	0.07	0.00	0.00	0.01	0.03	0.05	0.07	0.09
50	TC	165	175	181	185	189	192	195	175	184	191	196	201	203	204
	SHC	–25	–23	–20	–15	–9	–3	4	–54	–58	–60	–59	–58	–56	–54
	kW	26.9	26.4	26.1	26.0	25.9	25.9	25.9	28.8	28.4	28.2	28.3	28.5	28.8	29.2
	BF	0.00	0.01	0.02	0.03	0.04	0.05	0.07	0.00	0.00	0.01	0.03	0.05	0.07	0.09
60	TC	147	155	161	165	169	172	175	157	165	172	177	181	183	184
	SHC	–41	–39	–35	–31	–25	–19	–12	–69	–73	–75	–75	–73	–72	–70
	kW	27.8	27.2	26.9	26.8	26.7	26.7	26.7	29.7	29.2	29.0	29.1	29.3	29.6	30.0
	BF	0.00	0.01	0.02	0.03	0.04	0.05	0.07	0.00	0.00	0.01	0.03	0.05	0.07	0.09
70	TC	129	136	141	145	149	152	154	138	146	152	157	160	162	162
	SHC	–56	–55	–51	–46	–41	–35	–28	–84	–89	–90	–90	–89	–88	–86
	kW	28.7	28.2	27.8	27.7	27.6	27.6	27.7	30.6	30.1	29.9	30.0	30.2	30.5	30.9
	BF	0.00	0.01	0.02	0.03	0.04	0.05	0.07	0.00	0.00	0.01	0.03	0.05	0.07	0.09
75	TC	119	126	131	135	139	141	143	129	137	142	147	150	151	152
	SHC	–64	–62	–59	–54	–49	–43	–36	–92	–96	–98	–98	–97	–96	–94
	kW	29.2	28.7	28.3	28.2	28.1	28.1	28.1	31.1	30.6	30.4	30.5	30.7	31.0	31.3
	BF	0.00	0.01	0.02	0.03	0.04	0.05	0.07	0.00	0.00	0.01	0.03	0.05	0.07	0.09
80	TC	110	117	122	125	128	131	133	119	127	133	137	139	141	141
	SHC	–71	–70	–67	–62	–57	–51	–44	–99	–104	–106	–106	–105	–104	–102
	kW	29.7	29.2	28.9	28.7	28.6	28.6	28.7	31.6	31.1	30.9	31.0	31.2	31.5	31.8
	BF	0.00	0.01	0.02	0.03	0.04	0.05	0.07	0.00	0.00	0.01	0.03	0.05	0.07	0.09

See legend on page 58.

COOLING CAPACITIES (cont)

48/50A040 (40 TONS) — STANDARD MODE

Temp (F) Air Entering Condenser (Edb)		Evaporator Air Quantity — Cfm																			
		8,000					10,000					12,000					14,000				
		Evaporator Air — Ewb (F)																			
		75	72	67	62	57	75	72	67	62	57	75	72	67	62	57	75	72	67	62	57
75	TC	517	495	459	423	388	542	518	482	445	415	558	533	498	461	439	570	546	509	473	460
	SHC	206	235	284	330	371	216	253	313	370	408	228	270	341	408	439	239	287	368	441	460
	kW	25.9	25.5	25.0	24.7	24.3	26.3	25.9	25.4	25.0	24.5	26.6	26.2	25.6	25.2	24.8	26.8	26.4	25.8	25.3	25.1
	BF	0.00	0.00	0.06	0.04	0.05	0.00	0.10	0.06	0.05	0.13	0.15	0.08	0.06	0.06	0.20	0.11	0.08	0.07	0.08	0.29
85	TC	503	481	446	410	376	525	504	467	431	405	541	519	483	447	427	552	531	494	458	448
	SHC	199	230	278	325	364	210	248	307	363	397	222	265	335	400	427	233	282	362	434	448
	kW	29.2	28.8	28.5	28.0	27.7	29.6	29.3	28.8	28.4	27.9	29.9	29.5	29.0	28.6	28.3	30.1	29.7	29.2	28.7	28.5
	BF	0.00	0.13	0.06	0.03	0.05	0.00	0.09	0.06	0.05	0.16	0.13	0.08	0.06	0.06	0.23	0.10	0.08	0.07	0.08	0.31
95	TC	489	467	431	395	363	510	488	452	416	390	525	503	466	429	414	536	514	477	442	434
	SHC	193	224	272	317	356	205	242	301	356	390	217	260	328	392	414	228	276	355	425	434
	kW	33.0	32.6	32.3	32.0	31.7	33.4	33.1	32.6	32.3	31.8	33.7	33.4	32.9	32.5	32.1	33.9	33.5	33.0	32.6	32.4
	BF	0.00	0.10	0.05	0.04	0.06	0.10	0.08	0.05	0.05	0.15	0.11	0.08	0.06	0.06	0.25	0.10	0.08	0.07	0.09	0.33
105	TC	473	451	414	381	350	492	470	434	399	378	506	484	447	412	401	516	493	457	423	419
	SHC	187	218	264	311	346	200	236	293	348	378	211	253	321	384	401	221	269	347	414	419
	kW	37.2	36.8	36.8	36.2	36.5	37.6	37.4	37.0	37.0	36.6	37.9	37.6	37.2	37.1	36.7	38.1	37.8	37.4	37.0	36.8
	BF	0.00	0.08	0.05	0.03	0.07	0.15	0.08	0.05	0.05	0.18	0.10	0.07	0.06	0.07	0.27	0.09	0.08	0.07	0.10	0.35
115	TC	453	432	397	364	337	471	450	415	381	364	483	462	427	394	386	492	472	436	405	403
	SHC	180	211	257	302	332	193	228	286	340	364	204	245	313	375	386	214	262	339	402	403
	kW	42.0	41.4	42.2	42.1	41.8	42.5	42.4	42.4	42.5	42.2	42.6	42.6	42.5	42.5	42.2	42.8	42.8	42.7	42.3	42.2
	BF	0.00	0.07	0.05	0.03	0.11	0.12	0.07	0.05	0.05	0.21	0.09	0.07	0.06	0.07	0.30	0.08	0.07	0.06	0.11	0.37
120	TC	442	422	389	354	330	460	440	405	372	356	473	451	417	384	378	481	460	425	395	395
	SHC	177	207	255	297	327	189	225	281	336	356	200	241	309	369	378	211	258	335	395	395
	kW	44.6	44.8	44.1	45.8	45.1	45.2	45.3	45.3	45.2	45.2	45.5	45.4	45.4	45.4	45.2	45.6	45.6	45.6	45.2	45.2
	BF	0.00	0.07	0.03	0.04	0.12	0.11	0.07	0.05	0.04	0.23	0.09	0.07	0.06	0.07	0.32	0.08	0.07	0.06	0.12	0.39

48/50A040 (40 TONS) — STANDARD MODE (cont)

Temp (F) Air Entering Condenser (Edb)		Evaporator Air Quantity — Cfm														
		16,000					18,000					20,000				
		Evaporator Air — Ewb (F)														
		75	72	67	62	57	75	72	67	62	57	75	72	67	62	57
75	TC	579	555	519	483	477	587	563	526	491	491	593	569	532	504	503
	SHC	249	304	394	470	477	259	320	419	491	491	269	335	443	499	503
	kW	26.9	26.5	25.9	25.4	25.3	27.1	26.6	26.1	25.5	25.5	27.2	26.7	26.1	25.7	25.7
	BF	0.10	0.09	0.07	0.11	0.35	0.11	0.09	0.08	0.15	0.41	0.11	0.10	0.09	0.23	0.45
85	TC	560	539	503	468	464	568	546	510	479	478	574	552	515	491	489
	SHC	243	298	388	461	464	253	314	412	476	478	263	330	437	486	489
	kW	30.2	29.9	29.3	28.8	28.7	30.4	30.0	29.4	28.9	28.9	30.5	30.1	29.5	29.1	29.1
	BF	0.10	0.09	0.07	0.12	0.37	0.11	0.09	0.09	0.18	0.42	0.11	0.09	0.09	0.25	0.47
95	TC	543	522	485	451	450	551	528	492	465	463	556	534	497	477	475
	SHC	238	292	380	449	450	248	308	405	458	463	258	324	427	465	475
	kW	34.0	33.7	33.2	32.6	32.6	34.1	33.8	33.3	32.8	32.8	34.2	33.9	33.4	32.9	32.9
	BF	0.09	0.08	0.08	0.13	0.39	0.10	0.09	0.08	0.22	0.44	0.11	0.09	0.09	0.29	0.48
105	TC	523	501	464	435	434	529	507	471	450	447	534	512	475	459	458
	SHC	232	285	373	432	434	241	301	397	440	447	251	317	420	454	458
	kW	38.2	38.0	37.5	36.9	37.0	38.4	38.1	37.6	37.0	37.1	38.5	38.2	37.7	37.2	37.3
	BF	0.09	0.08	0.07	0.16	0.41	0.10	0.09	0.08	0.25	0.46	0.10	0.09	0.10	0.30	0.50
115	TC	500	479	443	420	417	505	484	449	434	429	510	489	453	440	439
	SHC	224	278	365	412	417	234	294	389	434	429	244	309	411	440	439
	kW	43.1	42.9	42.7	42.0	42.2	43.2	43.0	42.8	42.3	42.3	43.3	43.1	42.8	42.4	42.4
	BF	0.09	0.08	0.07	0.21	0.43	0.10	0.09	0.09	0.31	0.48	0.10	0.09	0.10	0.32	0.52
120	TC	488	467	432	412	408	493	473	437	425	420	497	477	442	430	430
	SHC	220	274	361	404	408	230	290	384	425	420	240	306	406	430	430
	kW	45.9	45.7	45.5	44.4	45.2	46.0	45.8	45.7	45.2	45.2	46.1	45.9	45.6	45.2	45.2
	BF	0.09	0.08	0.07	0.23	0.45	0.10	0.09	0.09	0.33	0.49	0.10	0.09	0.10	0.33	0.53

See legend on page 58.

Performance data (cont)

COOLING CAPACITIES (cont)

48/50A040 (40 TONS) — SUBCOOLING MODE

Temp (F) Air Entering Condenser (Edb)		Evaporator Air Quantity – SCFM																			
		8,000					10,000					12,000					14,000				
		Evaporator Air Ewb (F)																			
		75	72	67	62	57	75	72	67	62	57	75	72	67	62	57	75	72	67	62	57
75	TC	501	473	429	379	352	528	499	455	403	374	549	519	474	420	387	562	534	488	446	408
	SHC	189	214	253	281	327	202	231	281	319	368	214	249	307	352	387	224	265	331	395	408
	kW	26.5	26.1	25.7	24.9	25.0	26.8	26.4	25.9	25.2	25.1	27.1	26.7	26.2	25.4	25.0	27.3	26.9	26.3	26.0	25.3
	BF	0.00	0.07	0.09	0.09	0.10	0.07	0.10	0.11	0.11	0.14	0.10	0.12	0.12	0.13	0.22	0.12	0.13	0.14	0.15	0.30
85	TC	478	444	410	369	330	497	477	422	382	344	523	492	440	397	363	527	498	462	424	383
	SHC	172	190	239	276	309	177	215	253	302	338	195	229	279	334	363	196	236	311	378	383
	kW	29.4	28.9	28.9	28.4	27.9	29.5	29.4	28.6	28.2	27.9	30.0	29.6	28.9	28.4	28.1	30.1	29.7	29.2	29.1	28.2
	BF	0.00	0.07	0.09	0.09	0.11	0.07	0.10	0.11	0.11	0.16	0.10	0.12	0.12	0.13	0.24	0.12	0.13	0.14	0.16	0.32
95	TC	442	416	375	348	310	476	451	398	358	332	484	457	426	386	344	506	480	437	395	363
	SHC	142	168	209	259	292	164	196	235	284	326	164	201	271	328	344	184	226	293	354	363
	kW	32.6	32.3	31.9	31.9	31.6	33.1	32.9	32.1	31.7	31.7	33.1	32.8	32.6	32.3	31.7	33.5	33.2	32.7	32.3	31.8
	BF	0.02	0.07	0.09	0.09	0.11	0.08	0.10	0.11	0.11	0.18	0.11	0.12	0.12	0.13	0.25	0.13	0.13	0.14	0.16	0.33
105	TC	415	402	363	314	288	438	413	384	347	316	464	439	400	361	325	467	449	410	374	342
	SHC	122	160	203	231	275	133	165	227	278	311	153	190	252	309	325	153	202	274	338	342
	kW	36.6	36.7	36.4	35.9	35.9	36.8	36.6	36.5	36.4	36.2	37.2	37.0	36.7	36.4	36.0	37.2	37.1	36.8	36.5	36.1
	BF	0.03	0.08	0.09	0.09	0.11	0.08	0.10	0.11	0.11	0.19	0.11	0.12	0.12	0.14	0.27	0.13	0.13	0.14	0.16	0.34
115	TC	388	376	339	304	273	410	394	356	311	295	433	410	371	324	303	445	421	383	334	330
	SHC	103	141	184	226	260	113	154	207	247	291	130	169	231	277	303	140	183	254	303	330
	kW	41.2	41.5	41.4	41.4	41.5	41.4	41.5	41.4	40.9	41.3	41.8	41.6	41.4	41.0	40.9	41.9	41.7	41.6	41.0	41.4
	BF	0.03	0.08	0.09	0.09	0.13	0.08	0.10	0.10	0.11	0.21	0.11	0.12	0.12	0.14	0.29	0.13	0.13	0.14	0.17	0.36

48/50A040 (40 TONS) — SUBCOOLING MODE (cont)

Temp (F) Air Entering Condenser (Edb)		Evaporator Air Quantity – SCFM														
		16,000					18,000					20,000				
		Evaporator Air Ewb (F)														
		75	72	67	62	57	75	72	67	62	57	75	72	67	62	57
75	TC	568	537	490	445	416	583	553	509	465	452	591	554	516	469	464
	SHC	228	272	345	410	416	243	293	377	445	452	252	300	400	465	464
	kW	27.4	26.9	26.3	25.7	25.4	27.6	27.2	26.6	26.1	25.9	27.7	27.2	26.8	26.0	26.0
	BF	0.14	0.15	0.15	0.18	0.37	0.15	0.16	0.17	0.21	0.42	0.17	0.18	0.18	0.24	0.47
85	TC	539	509	463	421	405	553	519	469	439	433	561	531	478	46	444
	SHC	206	251	325	391	405	222	266	345	422	433	231	285	368	45	444
	kW	30.2	29.8	29.2	28.7	28.5	30.5	29.9	29.2	29.2	29.1	30.6	30.1	29.4	29.2	29.2
	BF	0.14	0.15	0.15	0.18	0.38	0.16	0.16	0.17	0.22	0.43	0.17	0.18	0.18	0.25	0.48
95	TC	515	489	448	409	394	517	488	455	404	409	525	495	449	424	425
	SHC	192	239	317	384	394	194	244	338	394	409	204	257	347	423	425
	kW	33.6	33.3	32.9	32.6	32.4	33.7	33.2	32.9	32.2	32.5	33.8	33.3	32.7	32.7	32.9
	BF	0.14	0.15	0.15	0.19	0.39	0.16	0.16	0.17	0.22	0.44	0.17	0.18	0.18	0.26	0.49
105	TC	484	460	420	369	359	488	464	426	384	385	491	471	431	399	396
	SHC	169	218	297	351	359	175	229	318	374	385	179	243	337	399	396
	kW	37.5	37.2	36.9	36.2	36.1	37.5	37.2	37.0	36.4	36.6	37.5	37.3	37.0	36.8	36.7
	BF	0.14	0.15	0.15	0.19	0.41	0.16	0.16	0.17	0.24	0.46	0.17	0.18	0.18	0.28	0.50
115	TC	445	429	390	357	335	458	435	397	365	355	464	432	401	375	366
	SHC	139	195	275	339	335	153	208	296	356	355	161	212	314	375	366
	kW	41.8	41.8	41.6	41.5	40.9	42.0	41.8	41.6	41.5	41.4	42.1	41.7	41.7	41.6	41.4
	BF	0.14	0.15	0.15	0.21	0.42	0.16	0.16	0.17	0.26	0.47	0.17	0.18	0.19	0.29	0.51

See legend on page 58.

COOLING CAPACITIES (cont)

50A040 (40 TONS) — HOT GAS REHEAT MODE

Temp (F) Air Entering Condenser (Edb)		Air Entering Evaporator — Ewb (F)													
		75 Dry Bulb							75 Dry Bulb						
		62.5 Wet Bulb (50% RH)							65.3 Wet Bulb (60% RH)						
		Air Entering Evaporator — SCFM													
		8,000	10,000	12,000	14,000	16,000	18,000	20,000	8,000	10,000	12,000	14,000	16,000	18,000	20,000
40	TC	243	259	269	277	283	288	291	259	275	286	294	300	305	308
	SHC	100	118	136	153	171	188	205	73	85	97	110	122	135	148
	kW	23.4	23.3	23.3	23.3	23.3	23.3	23.3	24.4	24.2	24.1	24.0	24.0	24.0	24.0
	BF	0.06	0.08	0.10	0.11	0.13	0.15	0.16	0.05	0.07	0.10	0.11	0.13	0.15	0.16
50	TC	224	239	249	256	262	266	270	240	255	265	273	278	283	286
	SHC	84	101	119	137	154	172	189	57	69	81	93	106	119	131
	kW	24.3	24.2	24.2	24.2	24.2	24.2	24.2	25.3	25.1	25.0	24.9	24.9	24.9	24.9
	BF	0.06	0.08	0.10	0.11	0.13	0.14	0.16	0.05	0.07	0.09	0.11	0.13	0.15	0.16
60	TC	204	217	227	234	239	243	247	219	233	243	250	256	260	263
	SHC	67	84	102	120	137	155	172	40	52	64	76	89	102	115
	kW	25.4	25.2	25.2	25.1	25.1	25.1	25.1	26.4	26.1	26.0	25.9	25.9	25.8	25.8
	BF	0.06	0.08	0.09	0.11	0.13	0.14	0.16	0.05	0.07	0.09	0.11	0.13	0.15	0.16
70	TC	184	196	205	211	216	220	223	198	211	220	227	232	235	238
	SHC	51	67	85	102	120	137	154	23	34	47	59	72	84	97
	kW	26.5	26.4	26.3	26.2	26.2	26.2	26.2	27.5	27.2	27.1	27.0	27.0	26.9	26.9
	BF	0.06	0.08	0.09	0.11	0.13	0.14	0.16	0.05	0.07	0.09	0.11	0.13	0.14	0.16
75	TC	175	186	194	200	204	208	211	188	200	209	215	220	223	226
	SHC	42	59	76	94	111	128	145	15	26	38	50	63	76	88
	kW	27.2	27.0	26.9	26.9	26.8	26.8	26.8	28.2	27.9	27.7	27.6	27.6	27.5	27.5
	BF	0.06	0.08	0.09	0.11	0.13	0.14	0.16	0.05	0.07	0.09	0.11	0.13	0.14	0.16
80	TC	165	176	183	188	193	196	199	178	189	197	203	208	211	214
	SHC	34	51	68	85	102	120	136	6	17	29	42	54	67	80
	kW	27.9	27.7	27.6	27.5	27.5	27.5	27.5	28.8	28.5	28.4	28.3	28.2	28.2	28.1
	BF	0.06	0.08	0.09	0.11	0.13	0.14	0.16	0.05	0.07	0.09	0.11	0.13	0.14	0.16

50A040 (40 TONS) — HOT GAS REHEAT MODE (cont)

Temp (F) Air Entering Condenser (Edb)		Air Entering Evaporator — Ewb (F)													
		75 Dry Bulb							75 Dry Bulb						
		68.0 Wet Bulb (70% RH)							70.5 Wet Bulb (80% RH)						
		Air Entering Evaporator — SCFM													
		8,000	10,000	12,000	14,000	16,000	18,000	20,000	8,000	10,000	12,000	14,000	16,000	18,000	20,000
40	TC	275	291	302	310	316	321	325	290	305	316	324	331	335	339
	SHC	47	53	60	68	76	84	92	20	23	26	29	33	37	42
	kW	25.5	25.1	25.0	24.9	24.8	24.8	24.7	26.5	26.1	25.8	25.7	25.6	25.5	25.4
	BF	0.02	0.05	0.08	0.10	0.13	0.14	0.16	0.00	0.00	0.02	0.06	0.09	0.11	0.13
50	TC	255	271	281	289	295	299	303	270	286	296	304	310	315	318
	SHC	30	37	44	51	59	67	76	5	7	10	13	17	21	26
	kW	26.4	26.0	25.8	25.7	25.6	25.6	25.5	27.4	26.9	26.7	26.5	26.4	26.3	26.2
	BF	0.02	0.05	0.08	0.10	0.12	0.14	0.16	0.00	0.00	0.02	0.06	0.09	0.11	0.13
60	TC	235	249	259	266	272	276	279	249	264	274	281	287	291	294
	SHC	14	20	27	34	42	51	59	–12	–10	–7	–4	0	4	9
	kW	27.4	27.0	26.8	26.7	26.6	26.5	26.5	28.4	27.9	27.6	27.4	27.3	27.2	27.2
	BF	0.02	0.05	0.08	0.10	0.12	0.14	0.16	0.00	0.00	0.03	0.06	0.09	0.11	0.13
70	TC	213	227	236	243	248	252	255	227	241	251	257	263	267	270
	SHC	–4	3	10	17	25	33	42	–29	–27	–24	–21	–17	–13	–9
	kW	28.5	28.1	27.9	27.8	27.7	27.6	27.6	29.6	29.0	28.7	28.5	28.4	28.3	28.2
	BF	0.02	0.05	0.08	0.10	0.12	0.14	0.16	0.00	0.00	0.03	0.06	0.09	0.11	0.13
75	TC	202	215	224	231	235	239	242	216	230	239	245	250	254	257
	SHC	–12	–6	1	8	16	25	33	–38	–36	–33	–30	–26	–22	–17
	kW	29.2	28.8	28.5	28.4	28.3	28.2	28.2	30.2	29.7	29.3	29.1	29.0	28.9	28.8
	BF	0.02	0.05	0.08	0.10	0.12	0.14	0.16	0.00	0.00	0.03	0.06	0.09	0.11	0.13
80	TC	191	203	212	218	223	226	229	205	218	227	233	238	241	244
	SHC	–21	–15	–8	0	8	16	24	–46	–45	–42	–39	–35	–31	–26
	kW	29.8	29.4	29.2	29.0	28.9	28.9	28.8	30.9	30.3	30.0	29.8	29.7	29.6	29.5
	BF	0.02	0.05	0.08	0.10	0.12	0.14	0.16	0.00	0.00	0.03	0.06	0.09	0.11	0.13

See legend on page 58.

Performance data (cont)

COOLING CAPACITIES (cont)

48/50A050 (50 TONS) — STANDARD MODE

Temp (F) Air Entering Condenser (Edb)		Evaporator Air Quantity — Cfm														
		10,000					12,500					15,000				
		Evaporator Air — Ewb (F)														
		75	72	67	62	57	75	72	67	62	57	75	72	67	62	57
75	TC	636	602	545	495	450	669	633	575	525	489	692	658	602	550	523
	SHC	255	287	340	391	438	271	314	379	443	482	289	338	418	493	523
	kW	31.3	30.7	29.9	29.2	28.5	31.8	31.2	30.3	29.6	29.0	32.2	31.6	30.8	30.1	29.6
	BF	0.00	0.07	0.06	0.04	0.05	0.00	0.10	0.06	0.05	0.16	0.18	0.09	0.06	0.06	0.23
85	TC	611	574	524	476	432	639	605	553	504	471	662	628	576	525	503
	SHC	237	270	322	371	413	253	293	357	417	450	266	312	387	456	481
	kW	34.6	33.9	33.3	32.8	32.2	35.0	34.5	33.8	33.2	32.6	35.4	34.9	34.2	33.6	33.1
	BF	0.00	0.17	0.06	0.04	0.06	0.00	0.09	0.05	0.05	0.17	0.15	0.08	0.06	0.06	0.25
95	TC	584	553	502	454	411	613	581	530	480	450	633	601	549	499	482
	SHC	227	261	315	365	408	246	287	354	416	450	263	311	390	463	482
	kW	38.4	38.0	37.5	37.4	36.8	38.9	38.5	38.1	37.9	37.2	39.3	38.9	38.5	38.1	37.6
	BF	0.00	0.13	0.05	0.04	0.07	0.08	0.08	0.05	0.05	0.18	0.13	0.08	0.06	0.06	0.28
105	TC	559	527	477	429	393	585	553	502	453	429	603	572	519	471	459
	SHC	213	248	301	351	387	233	274	339	401	429	249	297	375	447	459
	kW	43.0	42.9	42.9	43.5	42.4	43.8	43.5	43.5	43.8	43.0	44.1	43.9	43.9	43.7	43.2
	BF	0.00	0.10	0.05	0.04	0.11	0.20	0.08	0.05	0.05	0.21	0.12	0.07	0.06	0.07	0.30
115	TC	529	498	449	402	368	554	523	472	425	406	572	540	489	442	435
	SHC	201	234	286	335	367	219	259	324	385	406	235	283	360	428	435
	kW	49.0	49.3	50.0	51.1	50.1	49.8	49.9	50.6	51.2	50.4	50.2	50.3	51.0	50.8	50.4
	BF	0.00	0.09	0.04	0.04	0.13	0.15	0.07	0.05	0.05	0.24	0.11	0.07	0.05	0.08	0.33
120	TC	514	484	435	386	357	538	507	457	409	393	555	524	472	427	421
	SHC	194	227	278	326	357	212	252	316	376	393	228	275	351	418	421
	kW	52.5	53.0	54.3	55.3	54.6	53.3	53.7	54.7	55.5	54.2	53.8	54.1	55.3	54.7	54.1
	BF	0.00	0.08	0.04	0.04	0.15	0.13	0.07	0.05	0.05	0.26	0.10	0.07	0.05	0.08	0.35

48/50A050 (50 TONS) — STANDARD MODE (cont)

Temp (F) Air Entering Condenser (Edb)		Evaporator Air Quantity — Cfm									
		17,500					20,000				
		Evaporator Air — Ewb (F)									
		75	72	67	62	57	75	72	67	62	57
75	TC	709	674	618	566	550	740	685	629	577	573
	SHC	305	361	453	537	550	326	383	486	570	573
	kW	32.4	31.9	31.0	30.3	30.0	32.6	32.1	31.2	30.4	30.3
	BF	0.13	0.08	0.06	0.08	0.31	0.12	0.08	0.07	0.12	0.37
85	TC	678	645	591	540	529	691	656	600	552	550
	SHC	276	328	413	488	499	284	341	435	504	510
	kW	35.7	35.3	34.4	33.7	33.5	35.9	35.4	34.6	33.8	33.8
	BF	0.12	0.08	0.06	0.09	0.33	0.11	0.08	0.07	0.15	0.39
95	TC	648	616	563	512	506	658	625	572	530	527
	SHC	278	334	425	501	506	292	355	457	522	527
	kW	39.6	39.2	38.8	37.9	37.9	39.8	39.3	38.9	38.0	38.1
	BF	0.11	0.08	0.06	0.10	0.35	0.10	0.08	0.07	0.18	0.41
105	TC	617	585	532	487	483	628	595	542	506	503
	SHC	264	320	409	481	483	279	341	442	499	503
	kW	44.4	44.2	44.3	43.2	43.4	44.6	44.4	44.5	43.3	43.5
	BF	0.10	0.07	0.06	0.12	0.37	0.10	0.08	0.07	0.20	0.43
115	TC	584	553	500	463	458	594	562	508	476	474
	SHC	250	305	394	451	458	265	327	425	476	474
	kW	50.6	50.7	51.4	50.1	50.4	50.8	50.9	51.7	50.4	50.2
	BF	0.10	0.07	0.06	0.17	0.40	0.09	0.07	0.07	0.22	0.46
120	TC	567	535	482	447	444	577	545	492	465	462
	SHC	243	297	385	440	444	257	319	417	459	462
	kW	54.1	54.4	55.3	53.6	54.3	54.3	54.7	56.0	53.8	54.2
	BF	0.09	0.07	0.06	0.18	0.41	0.09	0.07	0.07	0.25	0.47

See legend on page 58.

COOLING CAPACITIES (cont)

48/50A050 (50 TONS) — SUBCOOLING MODE

Temp (F) Air Entering Condenser (Edb)		Evaporator Air Quantity – SCFM																			
		10,000					12,500					15,000					17,500				
		Evaporator Air Ewb (F)																			
		75	72	67	62	57	75	72	67	62	57	75	72	67	62	57	75	72	67	62	57
75	TC	601	568	523	479	438	624	596	547	507	471	643	608	567	521	494	651	604	582	542	524
	SHC	218	251	311	367	418	229	274	342	416	468	241	287	377	455	494	247	289	410	501	524
	kW	31.4	30.8	30.1	29.5	28.9	31.9	31.4	30.5	29.9	29.4	32.5	31.8	30.9	30.1	29.7	32.6	31.7	31.2	30.4	30.1
	BF	0.00	0.02	0.03	0.03	0.05	0.01	0.04	0.04	0.05	0.12	0.04	0.05	0.06	0.07	0.21	0.06	0.07	0.07	0.09	0.30
85	TC	567	541	498	455	417	596	570	522	481	449	620	586	540	495	472	610	599	554	510	496
	SHC	192	230	291	348	399	209	254	324	396	446	429	272	356	434	472	428	426	414	474	496
	kW	34.6	34.2	33.5	32.8	32.3	35.2	34.7	33.9	33.2	32.8	35.8	35.0	34.2	33.4	33.1	35.6	35.5	34.5	33.7	33.4
	BF	0.00	0.02	0.03	0.03	0.06	0.02	0.04	0.04	0.05	0.14	0.04	0.05	0.06	0.07	0.23	0.06	0.07	0.07	0.10	0.31
95	TC	540	513	469	428	395	565	497	495	454	426	565	555	512	470	452	591	568	524	482	477
	SHC	172	209	268	326	380	185	189	304	375	426	180	250	336	415	452	205	269	367	451	477
	kW	38.6	38.1	37.3	36.7	36.4	39.1	38.0	37.8	37.1	36.7	39.2	38.9	38.1	37.3	37.0	39.7	39.0	38.3	37.6	37.5
	BF	0.00	0.02	0.03	0.03	0.07	0.02	0.04	0.04	0.05	0.14	0.05	0.05	0.06	0.07	0.24	0.06	0.07	0.07	0.10	0.32
105	TC	512	484	444	405	378	533	506	465	424	400	548	523	482	440	423	524	535	494	455	445
	SHC	153	189	250	309	364	163	207	281	352	400	174	227	315	392	423	149	246	346	430	445
	kW	43.2	42.7	42.1	41.6	41.5	43.6	43.0	42.4	41.8	41.5	43.9	43.3	42.6	42.0	41.7	43.6	43.6	42.8	42.2	42.0
	BF	0.00	0.02	0.03	0.03	0.08	0.02	0.04	0.04	0.05	0.16	0.05	0.05	0.06	0.08	0.26	0.07	0.07	0.07	0.11	0.34
115	TC	477	454	421	385	350	500	474	432	398	377	515	489	450	413	401	533	502	459	427	421
	SHC	127	167	236	296	337	139	184	257	332	377	150	203	292	372	401	168	223	320	404	421
	kW	48.5	48.1	47.8	47.5	47.2	48.9	48.4	47.8	47.5	47.3	49.2	48.7	48.0	47.6	47.4	49.5	48.9	48.1	47.7	47.6
	BF	0.00	0.02	0.03	0.04	0.10	0.03	0.04	0.04	0.05	0.18	0.05	0.05	0.06	0.08	0.28	0.07	0.07	0.07	0.13	0.35

48/50A050 (50 TONS) — SUBCOOLING MODE (cont)

Temp (F) Air Entering Condenser (Edb)		Evaporator Air Quantity – SCFM														
		20,000					22,500					25,000				
		Evaporator Air Ewb (F)														
		75	72	67	62	57	75	72	67	62	57	75	72	67	62	57
75	TC	657	628	564	549	544	666	640	592	561	559	671	646	604	575	574
	SHC	255	320	412	530	544	267	343	460	557	559	276	360	493	575	574
	kW	32.7	32.2	31.0	30.6	30.5	32.9	32.4	31.5	30.8	30.7	33.0	32.5	31.8	31.0	31.0
	BF	0.08	0.08	0.08	0.13	0.36	0.10	0.10	0.10	0.18	0.42	0.11	0.11	0.11	0.23	0.46
85	TC	613	586	527	523	517	641	614	573	536	532	630	620	568	553	552
	SHC	428	422	409	407	406	437	430	418	409	409	433	430	416	553	552
	kW	35.7	35.2	34.1	33.9	33.8	36.4	35.8	34.8	34.1	34.1	36.1	35.8	34.7	34.4	34.4
	BF	0.08	0.08	0.08	0.13	0.37	0.10	0.10	0.10	0.19	0.43	0.11	0.11	0.12	0.25	0.47
95	TC	608	579	534	499	494	615	588	535	508	506	599	598	549	520	524
	SHC	224	289	397	486	494	236	309	419	505	506	222	329	454	520	524
	kW	39.9	39.3	38.5	37.8	37.7	40.0	39.5	38.5	38.0	38.0	39.9	39.7	38.8	38.2	38.2
	BF	0.08	0.08	0.09	0.15	0.39	0.10	0.10	0.10	0.20	0.44	0.11	0.11	0.12	0.26	0.48
105	TC	568	517	501	473	462	579	553	509	478	476	562	548	516	494	494
	SHC	194	237	374	461	462	210	284	402	478	476	198	292	430	494	494
	kW	44.3	43.3	42.9	42.4	42.2	44.5	43.9	43.0	42.5	42.5	44.3	43.9	43.2	42.7	42.7
	BF	0.08	0.08	0.09	0.16	0.40	0.10	0.10	0.10	0.21	0.45	0.11	0.11	0.12	0.28	0.49
115	TC	496	481	469	443	439	514	490	476	452	452	533	506	482	461	462
	SHC	134	211	350	432	439	155	204	378	452	452	179	231	404	461	462
	kW	49.0	48.5	48.2	47.8	47.7	49.3	48.7	48.3	47.9	47.9	49.5	48.9	48.4	48.0	48.1
	BF	0.08	0.08	0.09	0.18	0.41	0.10	0.10	0.11	0.23	0.46	0.11	0.11	0.13	0.29	0.51

See legend on page 58.

Performance data (cont)

COOLING CAPACITIES (cont)

50A050 (50 TONS) — HOT GAS REHEAT MODE

Temp (F) Air Entering Condenser (Edb)		Air Entering Evaporator — Ewb (F)													
		75 Dry Bulb 62.5 Wet Bulb (50% RH)							75 Dry Bulb 65.3 Wet Bulb (60% RH)						
		Air Entering Evaporator — SCFM													
		10,000	12,500	15,000	17,500	20,000	22,500	25,000	10,000	12,500	15,000	17,500	20,000	22,500	25,000
40	TC	192	208	218	225	230	234	238	203	219	230	238	243	247	251
	SHC	40	67	93	118	142	166	188	–1	18	37	55	74	93	112
	kW	37.0	36.0	35.5	35.2	35.0	34.9	34.8	38.5	37.3	36.7	36.3	36.1	35.9	35.8
	BF	0.02	0.03	0.04	0.06	0.07	0.09	0.11	0.02	0.03	0.04	0.05	0.07	0.08	0.09
50	TC	197	213	223	231	236	240	243	209	226	237	244	250	254	258
	SHC	43	70	96	121	145	169	191	2	21	40	59	78	97	115
	kW	36.1	35.1	34.6	34.3	34.1	34.0	33.9	37.6	36.4	35.8	35.4	35.2	35.0	34.9
	BF	0.02	0.03	0.04	0.06	0.07	0.09	0.11	0.02	0.03	0.04	0.05	0.07	0.08	0.09
60	TC	203	219	229	237	242	246	250	214	231	242	250	255	260	263
	SHC	47	73	99	124	149	173	195	5	24	43	62	80	99	118
	kW	35.3	34.3	33.8	33.5	33.3	33.2	33.2	36.8	35.6	35.0	34.7	34.4	34.3	34.1
	BF	0.02	0.03	0.04	0.06	0.07	0.09	0.11	0.02	0.03	0.04	0.05	0.07	0.08	0.09
70	TC	212	228	239	246	252	256	259	222	240	251	259	265	270	273
	SHC	52	78	104	129	154	178	200	10	29	48	67	86	105	124
	kW	33.8	32.9	32.4	32.1	32.0	31.9	31.8	35.3	34.2	33.6	33.3	33.1	32.9	32.8
	BF	0.02	0.03	0.04	0.05	0.07	0.08	0.10	0.02	0.03	0.04	0.05	0.06	0.08	0.09
75	TC	219	235	246	254	260	265	269	230	247	259	268	275	281	285
	SHC	57	83	109	134	159	183	206	15	34	53	72	91	110	129
	kW	32.6	31.7	31.2	31.0	30.8	30.8	30.7	34.1	33.0	32.5	32.2	32.0	31.8	31.7
	BF	0.02	0.03	0.04	0.05	0.07	0.08	0.10	0.02	0.03	0.04	0.05	0.06	0.08	0.09
80	TC	225	243	255	264	271	276	280	236	256	269	279	286	292	297
	SHC	61	87	114	140	165	189	212	19	39	58	78	97	116	135
	kW	31.5	30.7	30.3	30.0	29.9	29.8	29.8	33.0	32.0	31.5	31.2	31.0	30.9	30.8
	BF	0.02	0.03	0.04	0.05	0.07	0.08	0.10	0.02	0.03	0.04	0.05	0.06	0.08	0.09

50A050 (50 TONS) — HOT GAS REHEAT MODE (cont)

Temp (F) Air Entering Condenser (Edb)		Air Entering Evaporator — Ewb (F)													
		75 Dry Bulb 68.0 Wet Bulb (70% RH)							75 Dry Bulb 70.5 Wet Bulb (80% RH)						
		Air Entering Evaporator — SCFM													
		10,000	12,500	15,000	17,500	20,000	22,500	25,000	10,000	12,500	15,000	17,500	20,000	22,500	25,000
40	TC	213	231	242	250	256	260	264	223	241	253	262	268	273	277
	SHC	–42	–30	–18	–6	6	18	31	–81	–76	–71	–65	–59	–52	–45
	kW	40.0	38.6	37.9	37.4	37.1	36.9	36.8	41.6	40.0	39.1	38.6	38.2	38.0	37.8
	BF	0.01	0.03	0.04	0.05	0.07	0.08	0.09	0.00	0.01	0.03	0.05	0.07	0.08	0.10
50	TC	219	237	248	257	263	267	271	229	248	260	268	275	280	284
	SHC	–39	–27	–15	–3	9	22	34	–78	–73	–68	–62	–56	–49	–42
	kW	39.1	37.8	37.0	36.6	36.3	36.1	36.0	40.7	39.1	38.3	37.8	37.4	37.1	36.9
	BF	0.01	0.03	0.04	0.05	0.07	0.08	0.09	0.00	0.01	0.03	0.05	0.07	0.08	0.10
60	TC	224	242	254	262	268	273	277	234	253	265	274	281	286	290
	SHC	–36	–24	–12	0	12	24	37	–75	–70	–65	–59	–53	–46	–40
	kW	38.3	37.0	36.3	35.8	35.5	35.3	35.2	39.9	38.3	37.5	37.0	36.6	36.4	36.2
	BF	0.01	0.03	0.04	0.05	0.07	0.08	0.09	0.00	0.01	0.03	0.05	0.07	0.08	0.10
70	TC	233	251	263	272	278	283	287	243	262	275	284	291	296	300
	SHC	–31	–19	–7	5	17	29	42	–70	–65	–60	–54	–48	–41	–35
	kW	36.8	35.5	34.9	34.5	34.2	34.0	33.9	38.4	36.9	36.1	35.6	35.3	35.0	34.9
	BF	0.01	0.03	0.04	0.05	0.07	0.08	0.09	0.00	0.01	0.03	0.05	0.07	0.08	0.10
75	TC	241	259	273	282	290	295	300	251	271	285	296	303	309	314
	SHC	–26	–15	–2	10	23	35	48	–66	–60	–55	–49	–42	–35	–28
	kW	35.6	34.4	33.8	33.4	33.1	32.9	32.8	37.3	35.8	35.0	34.5	34.2	34.0	33.8
	BF	0.01	0.03	0.04	0.05	0.07	0.08	0.09	0.00	0.01	0.03	0.05	0.07	0.08	0.10
80	TC	249	269	283	294	301	307	312	260	282	297	307	316	322	327
	SHC	–22	–9	3	16	29	41	54	–61	–55	–49	–43	–36	–29	–22
	kW	34.6	33.4	32.8	32.4	32.2	32.0	31.9	36.3	34.8	34.1	33.6	33.3	33.1	32.9
	BF	0.01	0.03	0.04	0.05	0.07	0.08	0.09	0.00	0.01	0.03	0.05	0.07	0.08	0.10

See legend on page 58.

COOLING CAPACITIES (cont)

48/50A060 (60 TONS) — STANDARD MODE

Temp (F) Air Entering Condenser (Edb)		Evaporator Air Quantity — Cfm														
		12,000					15,000					18,000				
		Evaporator Air — Ewb (F)														
		75	72	67	62	57	75	72	67	62	57	75	72	67	62	57
75	TC	738	705	653	603	554	773	736	684	633	592	796	759	706	655	622
	SHC	293	334	406	474	533	305	361	447	530	578	324	386	486	582	622
	kW	40.0	39.2	38.1	37.1	36.3	40.7	39.9	38.7	37.7	36.9	41.2	40.4	39.2	38.2	37.5
	BF	0.00	0.00	0.10	0.08	0.08	0.00	0.15	0.10	0.09	0.19	0.23	0.13	0.11	0.10	0.25
85	TC	716	686	635	585	537	748	715	664	615	579	768	737	685	635	607
	SHC	284	327	398	465	522	298	353	439	521	562	315	378	478	572	607
	kW	44.4	43.7	42.7	41.7	40.9	45.1	44.4	43.3	42.3	41.5	45.6	44.9	43.7	42.7	42.1
	BF	0.00	0.12	0.10	0.07	0.09	0.00	0.14	0.10	0.09	0.22	0.20	0.12	0.11	0.10	0.27
95	TC	695	666	615	566	519	725	694	643	593	557	745	713	662	613	590
	SHC	276	320	389	456	510	292	346	430	511	557	308	370	469	561	590
	kW	49.5	48.8	47.8	46.9	46.1	50.2	49.5	48.4	47.5	46.8	50.7	50.0	48.8	47.9	47.4
	BF	0.00	0.19	0.09	0.07	0.10	0.00	0.13	0.09	0.09	0.20	0.18	0.12	0.10	0.10	0.29
105	TC	673	643	593	545	502	699	669	619	570	539	718	687	638	587	570
	SHC	264	311	380	446	493	283	337	420	500	539	300	361	460	549	570
	kW	55.3	54.6	53.7	52.8	51.8	55.9	55.3	54.2	53.3	52.6	56.4	55.7	54.7	53.7	53.3
	BF	0.00	0.15	0.09	0.07	0.13	0.24	0.12	0.09	0.08	0.22	0.16	0.12	0.10	0.11	0.31
115	TC	647	617	567	521	484	670	641	592	544	519	687	657	609	561	549
	SHC	255	301	369	434	474	274	327	410	488	519	290	350	448	536	549
	kW	61.7	61.1	60.3	60.0	59.2	62.3	61.7	60.9	60.4	59.9	62.8	62.2	61.3	60.6	60.2
	BF	0.00	0.13	0.08	0.07	0.17	0.18	0.11	0.09	0.08	0.25	0.14	0.11	0.10	0.11	0.34
120	TC	632	603	554	508	471	654	626	578	531	509	670	641	594	547	538
	SHC	251	296	364	428	461	269	322	404	482	509	285	345	443	528	538
	kW	65.2	64.8	64.3	64.1	63.3	65.8	65.5	64.9	64.5	64.0	66.4	65.8	65.2	64.7	64.4
	BF	0.00	0.12	0.08	0.07	0.17	0.17	0.10	0.09	0.09	0.27	0.13	0.11	0.10	0.12	0.35

48/50A060 (60 TONS) — STANDARD MODE (cont)

Temp (F) Air Entering Condenser (Edb)		Evaporator Air Quantity — Cfm														
		21,000					24,000					27,000				
		Evaporator Air — Ewb (F)														
		75	72	67	62	57	75	72	67	62	57	75	72	67	62	57
75	TC	813	776	722	671	651	826	789	735	683	674	837	800	745	695	693
	SHC	340	409	523	627	651	355	432	560	665	674	369	454	594	689	693
	kW	41.6	40.7	39.5	38.5	38.1	41.9	41.0	39.8	38.7	38.5	42.2	41.3	40.1	39.0	38.9
	BF	0.18	0.13	0.11	0.12	0.33	0.16	0.14	0.12	0.16	0.39	0.16	0.14	0.13	0.21	0.44
85	TC	784	752	700	650	634	796	764	713	662	656	806	774	723	678	675
	SHC	331	401	515	617	634	346	423	552	648	656	361	446	587	665	675
	kW	46.0	45.2	44.1	43.0	42.7	46.3	45.5	44.3	43.2	43.1	46.5	45.8	44.6	43.6	43.5
	BF	0.16	0.13	0.11	0.13	0.35	0.15	0.14	0.12	0.18	0.41	0.15	0.14	0.13	0.25	0.46
95	TC	759	728	678	627	616	770	739	689	640	638	780	748	698	659	656
	SHC	323	393	507	604	616	338	415	543	630	638	353	437	577	644	656
	kW	51.1	50.4	49.2	48.2	47.9	51.4	50.6	49.5	48.4	48.3	51.6	50.9	49.7	48.8	48.7
	BF	0.15	0.13	0.11	0.14	0.36	0.15	0.13	0.12	0.20	0.42	0.15	0.14	0.13	0.27	0.47
105	TC	731	701	651	602	596	742	711	662	620	616	750	720	670	637	634
	SHC	315	384	497	589	596	330	406	533	608	616	344	428	566	622	634
	kW	56.8	56.1	55.0	54.0	53.8	57.1	56.4	55.3	54.2	54.2	57.3	56.6	55.5	54.6	54.6
	BF	0.14	0.12	0.11	0.15	0.39	0.14	0.13	0.12	0.23	0.44	0.14	0.14	0.13	0.30	0.49
115	TC	699	670	622	576	573	709	679	631	596	592	716	687	639	612	609
	SHC	305	373	485	568	573	320	396	521	583	592	334	418	555	596	609
	kW	63.2	62.5	61.5	60.6	60.6	63.5	62.7	61.8	60.8	60.8	63.6	62.9	62.0	61.1	61.1
	BF	0.13	0.12	0.11	0.17	0.41	0.13	0.13	0.12	0.26	0.47	0.14	0.14	0.13	0.33	0.51
120	TC	682	653	607	564	561	691	662	616	584	580	698	670	623	600	595
	SHC	300	368	480	555	561	315	390	515	570	580	329	412	549	584	595
	kW	66.7	66.1	65.4	64.4	64.6	67.0	66.3	65.7	64.7	64.8	67.1	66.5	65.8	65.0	65.4
	BF	0.13	0.12	0.11	0.19	0.42	0.13	0.13	0.12	0.28	0.48	0.13	0.13	0.13	0.35	0.52

See legend on page 58.

Performance data (cont)

COOLING CAPACITIES (cont)

48/50A060 (60 TONS) — SUBCOOLING MODE

Temp (F) Air Entering Condenser (Edb)		Evaporator Air Quantity – SCFM																			
		12,000					15,000					18,000					21,000				
		Evaporator Air Ewb (F)																			
		75	72	67	62	57	75	72	67	62	57	75	72	67	62	57	75	72	67	62	57
75	TC	708	671	616	563	513	742	706	649	596	549	767	732	675	620	583	787	751	693	639	613
	SHC	253	294	361	425	483	271	320	400	481	542	288	346	441	531	583	303	368	477	578	613
	kW	39.7	39.0	38.0	37.1	36.2	40.4	39.7	38.6	37.7	36.9	40.8	40.2	39.1	38.0	37.4	41.2	40.5	39.4	38.4	38.0
	BF	0.00	0.03	0.06	0.07	0.08	0.01	0.07	0.08	0.09	0.15	0.05	0.09	0.10	0.11	0.23	0.08	0.11	0.12	0.14	0.31
85	TC	676	642	588	539	492	709	675	620	568	525	730	697	643	590	556	748	714	660	607	585
	SHC	229	272	340	406	466	247	297	379	459	519	260	320	416	508	556	275	341	452	552	585
	kW	43.8	43.1	42.1	41.2	40.4	44.4	43.7	42.7	41.7	41.0	44.9	44.2	43.1	42.1	41.5	45.2	44.5	43.5	42.4	42.0
	BF	0.00	0.04	0.06	0.07	0.09	0.02	0.07	0.08	0.09	0.16	0.06	0.09	0.10	0.11	0.24	0.09	0.11	0.12	0.14	0.32
95	TC	643	608	559	511	464	674	641	589	539	500	695	663	610	560	531	711	679	626	576	556
	SHC	205	245	317	384	445	220	271	356	437	494	235	294	392	485	531	249	316	427	528	556
	kW	48.4	47.7	46.7	45.8	45.0	49.0	48.3	47.3	46.3	45.6	49.5	48.8	47.7	46.7	46.2	49.8	49.1	48.0	47.0	46.6
	BF	0.00	0.04	0.06	0.07	0.08	0.02	0.07	0.08	0.09	0.17	0.06	0.09	0.10	0.11	0.26	0.09	0.11	0.12	0.14	0.33
105	TC	609	574	528	481	439	636	606	556	508	473	654	625	575	527	501	671	640	590	543	526
	SHC	179	220	294	362	420	193	245	331	413	469	205	267	366	459	501	219	288	401	501	526
	kW	53.6	52.8	51.9	51.0	50.2	54.2	53.5	52.5	51.5	50.8	54.6	54.0	52.9	51.9	51.4	55.0	54.3	53.2	52.2	51.9
	BF	0.00	0.04	0.06	0.07	0.10	0.03	0.07	0.08	0.09	0.18	0.07	0.09	0.10	0.11	0.27	0.09	0.11	0.11	0.15	0.35
115	TC	571	538	494	450	413	594	566	519	474	443	614	585	538	492	470	628	599	551	506	494
	SHC	153	193	268	338	395	162	217	304	387	443	177	238	339	433	470	189	259	373	472	494
	kW	59.4	58.7	57.8	56.9	56.1	59.9	59.3	58.3	57.4	56.7	60.4	59.7	58.7	57.7	57.3	60.7	60.0	59.0	58.0	57.8
	BF	0.01	0.05	0.06	0.07	0.12	0.04	0.07	0.08	0.09	0.19	0.07	0.09	0.10	0.12	0.29	0.09	0.11	0.11	0.15	0.36

48/50A060 (60 TONS) — SUBCOOLING MODE (cont)

Temp (F) Air Entering Condenser (Edb)		Evaporator Air Quantity – SCFM														
		24,000					27,000					30,000				
		Evaporator Air Ewb (F)														
		75	72	67	62	57	75	72	67	62	57	75	72	67	62	57
75	TC	804	768	708	654	637	814	779	720	665	657	825	789	729	678	674
	SHC	320	392	512	618	637	332	413	546	652	657	346	434	578	678	674
	kW	41.5	40.9	39.7	38.7	38.4	41.8	41.1	39.9	38.9	38.8	42.0	41.3	40.1	39.2	39.1
	BF	0.11	0.13	0.13	0.17	0.38	0.12	0.14	0.15	0.20	0.43	0.14	0.16	0.16	0.24	0.47
85	TC	761	729	674	621	607	772	740	684	634	627	783	749	693	647	646
	SHC	289	364	487	591	607	302	385	520	621	627	317	406	552	647	646
	kW	45.5	44.8	43.7	42.7	42.5	45.7	45.1	43.9	43.0	42.8	46.0	45.3	44.1	43.2	43.2
	BF	0.11	0.13	0.13	0.17	0.39	0.13	0.14	0.15	0.21	0.44	0.14	0.16	0.16	0.26	0.48
95	TC	722	691	639	589	578	734	702	647	599	597	742	709	656	612	613
	SHC	260	337	461	565	578	275	358	492	588	597	287	377	524	612	613
	kW	50.1	49.4	48.3	47.3	47.1	50.3	49.6	48.5	47.5	47.4	50.5	49.8	48.6	47.7	47.8
	BF	0.11	0.13	0.13	0.17	0.40	0.13	0.14	0.15	0.23	0.45	0.14	0.15	0.16	0.27	0.49
105	TC	682	651	601	556	547	692	661	608	569	565	700	669	618	582	580
	SHC	232	308	434	533	547	245	328	464	559	565	258	349	496	582	580
	kW	55.3	54.5	53.4	52.5	52.3	55.5	54.8	53.6	52.7	52.7	55.7	54.9	53.8	53.0	53.0
	BF	0.11	0.12	0.13	0.19	0.41	0.13	0.14	0.15	0.24	0.46	0.14	0.15	0.16	0.29	0.50
115	TC	639	610	562	521	514	647	618	570	535	531	655	625	575	546	545
	SHC	202	279	406	501	514	214	299	437	527	531	226	318	464	546	545
	kW	61.0	60.3	59.2	58.3	58.2	61.2	60.5	59.4	58.6	58.5	61.4	60.7	59.5	58.8	58.8
	BF	0.11	0.12	0.13	0.21	0.42	0.13	0.14	0.15	0.25	0.47	0.14	0.15	0.17	0.30	0.51

See legend on page 58.

COOLING CAPACITIES (cont)

50A060 (60 TONS) — HOT GAS REHEAT MODE

Temp (F) Air Entering Condenser (Edb)		Air Entering Evaporator — Ewb (F)													
		75 Dry Bulb							75 Dry Bulb						
		62.5 Wet Bulb (50% RH)							65.3 Wet Bulb (60% RH)						
		Air Entering Evaporator — SCFM													
		12,000	15,000	18,000	21,000	24,000	27,000	30,000	12,000	15,000	18,000	21,000	24,000	27,000	30,000
40	TC	298	322	339	352	362	369	375	314	339	357	370	380	388	395
	SHC	80	111	141	171	201	230	258	30	52	74	97	119	141	163
	kW	36.2	36.0	36.0	36.1	36.1	36.2	36.3	37.8	37.5	37.4	37.4	37.4	37.5	37.5
	BF	0.04	0.06	0.07	0.08	0.09	0.11	0.12	0.03	0.05	0.07	0.08	0.09	0.10	0.12
50	TC	287	308	324	336	345	351	357	301	325	341	353	363	370	376
	SHC	74	104	134	164	194	223	250	24	46	68	90	112	134	156
	kW	37.7	37.5	37.4	37.4	37.5	37.5	37.6	39.3	38.9	38.8	38.8	38.8	38.8	38.8
	BF	0.04	0.06	0.07	0.08	0.09	0.11	0.12	0.04	0.05	0.07	0.08	0.09	0.10	0.12
60	TC	277	297	311	320	328	335	340	291	311	326	337	346	352	358
	SHC	70	99	128	157	187	216	243	19	40	61	83	105	127	149
	kW	39.4	39.1	39.0	39.0	39.0	39.0	39.1	40.9	40.5	40.3	40.3	40.3	40.3	40.3
	BF	0.04	0.06	0.07	0.08	0.09	0.11	0.12	0.04	0.05	0.07	0.08	0.09	0.10	0.11
70	TC	267	287	299	309	316	321	325	280	300	314	324	331	336	341
	SHC	65	94	123	153	182	210	237	15	35	56	78	100	121	143
	kW	41.2	40.9	40.8	40.7	40.7	40.7	40.8	42.7	42.3	42.1	42.0	42.0	42.0	42.0
	BF	0.04	0.06	0.07	0.08	0.09	0.11	0.12	0.04	0.05	0.07	0.08	0.09	0.10	0.11
75	TC	262	281	294	303	309	314	319	275	295	308	317	324	330	334
	SHC	62	92	121	150	180	207	234	12	33	54	75	97	119	141
	kW	42.2	41.9	41.7	41.7	41.7	41.7	41.7	43.7	43.3	43.1	43.0	43.0	42.9	42.9
	BF	0.04	0.06	0.07	0.08	0.09	0.11	0.13	0.04	0.05	0.07	0.08	0.09	0.10	0.11
80	TC	257	275	288	296	303	308	312	270	289	302	311	318	323	327
	SHC	60	89	118	148	177	205	232	10	30	51	73	95	116	138
	kW	43.3	42.9	42.8	42.7	42.7	42.7	42.7	44.8	44.3	44.1	44.0	44.0	44.0	43.9
	BF	0.04	0.06	0.07	0.08	0.09	0.11	0.13	0.04	0.05	0.07	0.08	0.09	0.10	0.11

50A060 (60 TONS) — HOT GAS REHEAT MODE (cont)

Temp (F) Air Entering Condenser (Edb)		Air Entering Evaporator — Ewb (F)													
		75 Dry Bulb							75 Dry Bulb						
		68.0 Wet Bulb (70% RH)							70.5 Wet Bulb (80% RH)						
		Air Entering Evaporator — SCFM													
		12,000	15,000	18,000	21,000	24,000	27,000	30,000	12,000	15,000	18,000	21,000	24,000	27,000	30,000
40	TC	330	357	375	389	400	408	414	345	373	393	407	418	426	433
	SHC	–19	–5	10	24	39	54	69	–65	–58	–51	–43	–35	–27	–18
	kW	39.4	39.0	38.8	38.8	38.8	38.7	38.8	41.0	40.4	40.2	40.0	40.0	39.9	39.9
	BF	0.02	0.04	0.06	0.07	0.09	0.10	0.11	0.00	0.01	0.03	0.05	0.07	0.09	0.10
50	TC	316	341	359	372	381	389	395	331	358	376	389	399	407	413
	SHC	–25	–11	3	18	32	48	63	–72	–64	–57	–50	–42	–33	–25
	kW	40.9	40.4	40.2	40.1	40.1	40.1	40.1	42.5	41.8	41.5	41.4	41.3	41.2	41.2
	BF	0.02	0.04	0.06	0.07	0.09	0.10	0.11	0.00	0.01	0.03	0.05	0.07	0.09	0.10
60	TC	304	326	342	354	363	370	376	318	342	358	371	380	387	393
	SHC	–30	–17	–3	11	26	41	56	–77	–71	–64	–56	–48	–40	–31
	kW	42.5	42.0	41.7	41.6	41.6	41.5	41.5	44.1	43.4	43.1	42.9	42.8	42.7	42.6
	BF	0.02	0.04	0.06	0.07	0.09	0.10	0.11	0.00	0.01	0.03	0.05	0.07	0.09	0.10
70	TC	294	315	329	339	347	353	357	307	329	343	354	363	369	374
	SHC	–35	–22	–9	5	20	35	49	–82	–75	–69	–62	–54	–46	–37
	kW	44.3	43.8	43.5	43.3	43.3	43.2	43.2	45.9	45.2	44.8	44.6	44.5	44.4	44.3
	BF	0.02	0.04	0.06	0.07	0.09	0.10	0.11	0.00	0.01	0.03	0.05	0.07	0.09	0.10
75	TC	288	309	323	332	340	346	350	301	323	337	348	356	362	367
	SHC	–37	–24	–11	3	18	32	47	–84	–78	–71	–64	–56	–48	–40
	kW	45.3	44.7	44.5	44.3	44.2	44.2	44.1	46.9	46.1	45.7	45.5	45.4	45.3	45.3
	BF	0.02	0.04	0.06	0.07	0.09	0.10	0.11	0.00	0.01	0.03	0.05	0.07	0.09	0.10
80	TC	283	303	316	326	333	339	343	295	316	330	341	348	355	360
	SHC	–39	–27	–13	1	15	30	44	–86	–80	–74	–67	–59	–50	–42
	kW	46.4	45.8	45.5	45.3	45.2	45.2	45.1	47.9	47.2	46.8	46.6	46.4	46.3	46.3
	BF	0.02	0.04	0.06	0.07	0.09	0.10	0.11	0.00	0.01	0.03	0.05	0.07	0.09	0.10

See legend on page 58.

Performance data (cont)

FAN PERFORMANCE — VERTICAL DISCHARGE UNITS

48A2,A3,A6,A7 020 (20 TONS)

Airflow (Cfm)	Available External Static Pressure (in. wg)																			
	0.2		0.4		0.6		0.8		1.0		1.2		1.4		1.6		1.8		2.0	
	Rpm	Bhp	Rpm	Bhp	Rpm	Bhp	Rpm	Bhp	Rpm	Bhp	Rpm	Bhp	Rpm	Bhp	Rpm	Bhp	Rpm	Bhp	Rpm	Bhp
4,000	328	0.62	406	0.84	472	1.07	529	1.30	580	1.54	626	1.78	668	2.02	708	2.27	745	2.51	780	2.76
5,000	369	0.97	439	1.19	500	1.43	554	1.69	604	1.95	650	2.21	692	2.48	731	2.74	769	3.01	804	3.28
6,000	415	1.43	477	1.65	533	1.90	584	2.17	631	2.45	676	2.73	717	3.01	756	3.30	793	3.59	828	3.88
7,000	463	2.01	519	2.25	570	2.50	618	2.78	662	3.06	704	3.36	744	3.65	782	3.96	818	4.27	852	4.58
7,500	488	2.36	541	2.60	590	2.86	636	3.13	679	3.42	720	3.72	759	4.02	796	4.33	832	4.65	866	4.96
8,000	513	2.74	564	2.98	611	3.24	655	3.52	697	3.81	737	4.11	775	4.42	811	4.74	846	5.06	879	5.38
9,000	564	3.61	612	3.87	655	4.13	696	4.42	735	4.71	772	5.02	808	5.33	843	5.65	876	5.98	909	6.32
10,000	616	4.64	661	4.91	701	5.18	739	5.47	776	5.77	811	6.08	845	6.40	878	6.72	909	7.06	940	7.40

48A2,A3,A6,A7 020 (20 TONS) (cont)

Airflow (Cfm)	Available External Static Pressure (in. wg)																			
	2.2		2.4		2.6		2.8		3.0		3.2		3.4		3.6		3.8		4.0	
	Rpm	Bhp	Rpm	Bhp	Rpm	Bhp	Rpm	Bhp	Rpm	Bhp	Rpm	Bhp	Rpm	Bhp	Rpm	Bhp	Rpm	Bhp	Rpm	Bhp
4,000	814	3.01	845	3.26	876	3.51	905	3.76	934	4.02	961	4.28	987	4.54	1013	4.80	1038	5.06	1062	5.32
5,000	837	3.55	869	3.82	900	4.10	929	4.37	958	4.64	985	4.92	1012	5.20	1038	5.48	1063	5.76	1087	6.04
6,000	861	4.17	893	4.46	923	4.76	953	5.05	981	5.35	1009	5.65	1036	5.94	1062	6.24	1087	6.54	1111	6.84
7,000	885	4.89	917	5.20	947	5.51	977	5.83	1005	6.14	1033	6.46	1059	6.78	1085	7.09	1110	7.41	1135	7.73
7,500	898	5.28	930	5.61	960	5.93	989	6.25	1017	6.58	1045	6.90	1071	7.23	1097	7.56	1122	7.88	1147	8.21
8,000	912	5.71	943	6.04	973	6.37	1002	6.70	1030	7.04	1057	7.37	1083	7.71	1109	8.04	1134	8.38	1159	8.72
9,000	940	6.66	970	7.00	999	7.35	1028	7.69	1055	8.04	1082	8.39	1109	8.75	1134	9.10	1159	9.45	1183	9.81
10,000	971	7.75	1000	8.10	1028	8.46	1056	8.82	1083	9.18	1109	9.54	1135	9.91	1160	10.28	1185	10.65	—	—

48A2,A3,A6,A7 025-030 (25 THRU 30 TONS)

Airflow (Cfm)	Available External Static Pressure (in. wg)																			
	0.2		0.4		0.6		0.8		1.0		1.2		1.4		1.6		1.8		2.0	
	Rpm	Bhp	Rpm	Bhp	Rpm	Bhp	Rpm	Bhp	Rpm	Bhp	Rpm	Bhp	Rpm	Bhp	Rpm	Bhp	Rpm	Bhp	Rpm	Bhp
5,000	374	0.98	443	1.20	503	1.45	558	1.70	607	1.96	653	2.23	695	2.49	734	2.76	771	3.03	806	3.30
6,000	421	1.45	482	1.68	538	1.93	589	2.20	636	2.47	680	2.75	721	3.04	759	3.33	796	3.62	831	3.91
7,000	471	2.04	526	2.28	576	2.54	623	2.81	668	3.10	710	3.39	749	3.69	787	4.00	823	4.31	857	4.62
8,000	522	2.78	572	3.03	619	3.29	662	3.57	704	3.86	743	4.16	781	4.47	817	4.79	851	5.11	885	5.44
9,000	574	3.66	621	3.92	664	4.19	704	4.47	743	4.77	780	5.08	815	5.40	850	5.72	883	6.05	915	6.39
10,000	628	4.71	671	4.97	711	5.25	748	5.54	784	5.84	819	6.15	853	6.47	885	6.81	917	7.14	948	7.49
11,000	682	5.91	722	6.19	759	6.48	795	6.77	828	7.08	861	7.40	893	7.72	924	8.06	954	8.40	983	8.75
12,000	736	7.30	774	7.59	809	7.88	842	8.18	874	8.49	905	8.82	935	9.15	965	9.48	993	9.83	1021	10.19
13,000	791	8.86	827	9.16	860	9.46	891	9.78	922	10.09	951	10.42	979	10.75	1007	11.10	1034	11.45	1061	11.80
14,000	846	10.61	880	10.93	912	11.24	941	11.56	970	11.88	998	12.21	1025	12.56	1052	12.90	1078	13.26	1103	13.62
15,000	902	12.56	934	12.89	964	13.21	992	13.54	1020	13.87	1046	14.21	1072	14.55	1098	14.91	1122	15.26	1147	15.63

48A2,A3,A6,A7 025-030 (25 THRU 30 TONS) (cont)

Airflow (Cfm)	Available External Static Pressure (in. wg)																			
	2.2		2.4		2.6		2.8		3.0		3.2		3.4		3.6		3.8		4.0	
	Rpm	Bhp	Rpm	Bhp	Rpm	Bhp	Rpm	Bhp	Rpm	Bhp	Rpm	Bhp	Rpm	Bhp	Rpm	Bhp	Rpm	Bhp	Rpm	Bhp
5,000	839	3.57	871	3.84	902	4.11	931	4.39	960	4.66	987	4.94	1014	5.22	1039	5.50	1064	5.78	1089	6.06
6,000	864	4.20	896	4.49	926	4.79	956	5.08	984	5.38	1012	5.68	1038	5.97	1064	6.27	1089	6.57	1114	6.87
7,000	890	4.93	921	5.24	951	5.55	980	5.87	1009	6.18	1036	6.50	1063	6.82	1088	7.14	1114	7.45	1138	7.77
8,000	917	5.76	948	6.09	977	6.42	1006	6.76	1034	7.09	1061	7.43	1088	7.76	1113	8.10	1138	8.43	1163	8.77
9,000	946	6.73	976	7.07	1005	7.42	1033	7.76	1061	8.11	1088	8.46	1114	8.82	1139	9.17	1164	9.52	1188	9.88
10,000	978	7.84	1007	8.19	1035	8.55	1063	8.91	1089	9.27	1116	9.63	1141	10.00	1166	10.37	1191	10.74	—	—
11,000	1012	9.10	1040	9.47	1067	9.83	1094	10.20	1120	10.57	1145	10.95	1170	11.33	1195	11.71	—	—	—	—
12,000	1048	10.54	1075	10.91	1102	11.28	1127	11.66	1152	12.04	1177	12.42	—	—	—	—	—	—	—	—
13,000	1087	12.17	1113	12.54	1138	12.91	1163	13.30	1187	13.68	—	—	—	—	—	—	—	—	—	—
14,000	1128	13.98	1153	14.36	1177	14.74	—	—	—	—	—	—	—	—	—	—	—	—	—	—
15,000	1171	16.00	1194	16.38	—	—	—	—	—	—	—	—	—	—	—	—	—	—	—	—

LEGEND

Bhp — Brake Horsepower

NOTES:

1. Fan performance is based on wet coils, economizer, roof curb, cabinet losses, and clean 2-in. filters.
2. Conversion — Bhp to watts:

$$\text{Watts} = \frac{\text{Bhp} \times 746}{\text{Motor efficiency}}$$

3. Variable air volume units will operate down to 70 cfm/ton. Performance at 70 cfm/ton is limited to unloaded operation and may be additionally limited by edb and ewb conditions or Humidi-MiZer operation.

FAN PERFORMANCE — VERTICAL DISCHARGE UNITS (cont)

48A2,A3,A6,A7 035 (35 TONS)

AIRFLOW (Cfm)	AVAILABLE EXTERNAL STATIC PRESSURE (In. wg)																			
	0.2		0.4		0.6		0.8		1.0		1.2		1.4		1.6		1.8		2.0	
	Rpm	Bhp	Rpm	Bhp	Rpm	Bhp	Rpm	Bhp	Rpm	Bhp	Rpm	Bhp	Rpm	Bhp	Rpm	Bhp	Rpm	Bhp	Rpm	Bhp
7,000	534	2.46	584	2.80	630	3.13	674	3.48	716	3.82	756	4.16	793	4.50	829	4.83	863	5.17	896	5.49
8,000	590	3.27	635	3.63	677	3.99	718	4.35	757	4.72	794	5.08	830	5.45	864	5.81	897	6.18	929	6.54
9,000	646	4.23	687	4.62	726	5.00	764	5.38	800	5.76	835	6.15	869	6.54	902	6.93	934	7.31	964	7.70
10,000	704	5.35	742	5.77	778	6.17	812	6.57	846	6.97	879	7.38	911	7.78	942	8.19	972	8.60	1002	9.01
10,500	733	5.97	769	6.40	804	6.82	837	7.23	870	7.64	902	8.05	933	8.46	963	8.88	992	9.30	1021	9.72
11,000	762	6.63	797	7.08	830	7.51	863	7.93	894	8.35	925	8.77	955	9.19	984	9.62	1013	10.04	1041	10.47
12,000	820	8.09	853	8.56	884	9.01	915	9.46	944	9.90	973	10.34	1001	10.78	1029	11.22	1056	11.66	1083	12.10
13,000	879	9.72	909	10.22	939	10.70	968	11.17	996	11.63	1023	12.09	1050	12.55	1076	13.01	1102	13.46	1127	13.92
14,000	938	11.54	967	12.07	995	12.58	1022	13.07	1048	13.55	1074	14.03	1099	14.51	1124	14.98	1149	15.46	1173	15.93
15,000	997	13.56	1024	14.11	1051	14.64	1076	15.16	1102	15.67	1126	16.17	1150	16.66	1174	17.16	1197	17.65	1220	18.14
16,000	1056	15.78	1082	16.35	1107	16.91	1132	17.45	1156	17.98	1179	18.50	1202	19.02	1225	19.53	1247	20.04	1269	20.55
17,000	1116	18.20	1140	18.80	1164	19.38	1188	19.95	1210	20.50	1233	21.05	1255	21.58	1276	22.11	1298	22.64	—	—
17,500	1145	19.49	1170	20.10	1193	20.70	1216	21.28	1238	21.84	1260	22.40	1282	22.94	—	—	—	—	—	—

48A2,A3,A6,A7 035 (35 TONS) (cont)

AIRFLOW (Cfm)	AVAILABLE EXTERNAL STATIC PRESSURE (In. wg)																			
	2.2		2.4		2.6		2.8		3.0		3.2		3.4		3.6		3.8		4.0	
	Rpm	Bhp	Rpm	Bhp	Rpm	Bhp	Rpm	Bhp	Rpm	Bhp	Rpm	Bhp	Rpm	Bhp	Rpm	Bhp	Rpm	Bhp	Rpm	Bhp
7,000	927	5.81	956	6.13	985	6.45	1012	6.76	1039	7.06	1065	7.37	1090	7.67	1114	7.97	1138	8.26	1161	8.56
8,000	960	6.89	989	7.25	1018	7.60	1045	7.94	1072	8.29	1098	8.63	1122	8.96	1147	9.29	1170	9.62	1193	9.95
9,000	994	8.09	1023	8.47	1051	8.85	1078	9.23	1104	9.61	1130	9.98	1155	10.35	1179	10.71	1203	11.08	1226	11.44
10,000	1030	9.42	1058	9.82	1085	10.23	1112	10.64	1138	11.04	1163	11.44	1188	11.84	1212	12.24	1235	12.64	1258	13.03
10,500	1049	10.14	1077	10.56	1103	10.97	1129	11.39	1155	11.81	1180	12.23	1204	12.64	1228	13.05	1251	13.46	1274	13.87
11,000	1069	10.90	1095	11.33	1122	11.76	1147	12.18	1173	12.61	1197	13.04	1221	13.47	1245	13.89	1268	14.31	1291	14.73
12,000	1109	12.55	1135	13.00	1160	13.44	1185	13.89	1209	14.34	1233	14.79	1256	15.24	1279	15.69	—	—	—	—
13,000	1152	14.38	1176	14.84	1200	15.31	1224	15.77	1248	16.24	1271	16.70	1293	17.17	—	—	—	—	—	—
14,000	1196	16.41	1220	16.88	1243	17.36	1266	17.84	1288	18.32	—	—	—	—	—	—	—	—	—	—
15,000	1243	18.63	1265	19.12	1287	19.61	—	—	—	—	—	—	—	—	—	—	—	—	—	—
16,000	1290	21.06	—	—	—	—	—	—	—	—	—	—	—	—	—	—	—	—	—	—
17,000	—	—	—	—	—	—	—	—	—	—	—	—	—	—	—	—	—	—	—	—
17,500	—	—	—	—	—	—	—	—	—	—	—	—	—	—	—	—	—	—	—	—

48A2,A3,A6,A7040 (40 TONS)

Airflow (Cfm)	Available External Static Pressure (in. wg)																			
	0.2		0.4		0.6		0.8		1.0		1.2		1.4		1.6		1.8		2.0	
	Rpm	Bhp	Rpm	Bhp	Rpm	Bhp	Rpm	Bhp	Rpm	Bhp	Rpm	Bhp	Rpm	Bhp	Rpm	Bhp	Rpm	Bhp	Rpm	Bhp
8,000	502	2.90	550	3.30	596	3.71	639	4.12	680	4.54	720	4.97	759	5.40	796	5.85	832	6.31	867	6.77
9,000	552	3.81	595	4.24	637	4.67	677	5.11	715	5.55	752	6.00	788	6.45	823	6.92	857	7.39	890	7.87
10,000	602	4.89	642	5.34	680	5.80	717	6.26	752	6.73	787	7.20	821	7.67	854	8.16	886	8.64	917	9.14
11,000	653	6.15	689	6.62	725	7.11	759	7.59	792	8.08	825	8.58	856	9.07	887	9.57	918	10.08	947	10.59
12,000	704	7.60	738	8.09	771	8.60	803	9.11	834	9.63	865	10.14	895	10.66	924	11.18	952	11.71	980	12.24
13,000	756	9.24	788	9.76	818	10.29	848	10.83	878	11.36	906	11.90	935	12.44	962	12.99	989	13.53	1016	14.08
14,000	808	11.10	838	11.64	867	12.19	895	12.74	922	13.30	950	13.87	976	14.43	1002	15.00	1028	15.57	1053	16.14
15,000	861	13.18	888	13.74	915	14.31	942	14.88	968	15.46	994	16.05	1019	16.63	1044	17.22	1068	17.81	1093	18.40
16,000	914	15.49	940	16.06	965	16.65	990	17.24	1015	17.85	1039	18.45	1063	19.06	1087	19.67	1110	20.28	1133	20.89
17,000	967	18.03	991	18.62	1015	19.23	1039	19.85	1062	20.47	1086	21.09	1109	21.72	1131	22.35	1153	22.98	1175	23.61
18,000	1020	20.82	1043	21.43	1066	22.06	1088	22.69	1111	23.33	1133	23.97	1155	24.62	1176	25.27	1197	25.92	1219	26.58
19,000	1073	23.87	1095	24.50	1117	25.14	1138	25.79	1159	26.44	1180	27.11	1201	27.77	1222	28.45	1242	29.12	—	—
20,000	1127	27.18	1147	27.82	1168	28.48	1188	29.15	—	—	—	—	—	—	—	—	—	—	—	—

48A2,A3,A6,A7040 (40 TONS) (cont)

Airflow (Cfm)	Available External Static Pressure (in. wg)																			
	2.2		2.4		2.6		2.8		3.0		3.2		3.4		3.6		3.8		4.0	
	Rpm	Bhp	Rpm	Bhp	Rpm	Bhp	Rpm	Bhp	Rpm	Bhp	Rpm	Bhp	Rpm	Bhp	Rpm	Bhp	Rpm	Bhp	Rpm	Bhp
8,000	901	7.24	933	7.72	965	8.20	995	8.69	1024	9.19	1053	9.69	1081	10.19	1108	10.70	1134	11.21	1159	11.73
9,000	923	8.35	954	8.85	985	9.35	1014	9.86	1043	10.37	1072	10.89	1099	11.41	1126	11.94	1152	12.47	1177	13.00
10,000	948	9.64	978	10.15	1007	10.66	1036	11.19	1064	11.71	1092	12.25	1119	12.78	1145	13.33	1171	13.88	1196	14.43
11,000	976	11.11	1005	11.63	1033	12.16	1061	12.70	1088	13.24	1114	13.79	1140	14.34	1166	14.90	1191	15.46	1216	16.03
12,000	1008	12.77	1035	13.31	1062	13.86	1088	14.41	1114	14.97	1139	15.53	1164	16.09	1189	16.67	1213	17.24	1237	17.83
13,000	1042	14.64	1068	15.19	1093	15.76	1118	16.32	1143	16.89	1167	17.47	1191	18.05	1215	18.64	1238	19.23	1262	19.82
14,000	1078	16.71	1103	17.28	1127	17.86	1151	18.45	1174	19.03	1198	19.63	1221	20.22	1244	20.82	1266	21.43	1288	22.04
15,000	1116	19.00	1140	19.59	1163	20.19	1186	20.79	1208	21.40	1230	22.00	1253	22.62	1274	23.23	1296	23.85	—	—
16,000	1156	21.51	1178	22.12	1200	22.74	1222	23.36	1244	23.98	1265	24.61	1286	25.24	—	—	—	—	—	—
17,000	1197	24.25	1218	24.89	1240	25.52	1261	26.17	1281	26.81	—	—	—	—	—	—	—	—	—	—
18,000	1239	27.24	1260	27.89	1280	28.55	—	—	—	—	—	—	—	—	—	—	—	—	—	—
19,000	—	—	—	—	—	—	—	—	—	—	—	—	—	—	—	—	—	—	—	—
20,000	—	—	—	—	—	—	—	—	—	—	—	—	—	—	—	—	—	—	—	—

LEGEND

Bhp — Brake Horsepower

NOTES:

1. Fan performance is based on wet coils, economizer, roof curb, cabinet losses, and clean 2-in. filters.
2. Conversion — Bhp to watts:

$$\text{Watts} = \frac{\text{Bhp} \times 746}{\text{Motor efficiency}}$$

3. Variable air volume units will operate down to 70 cfm/ton. Performance at 70 cfm/ton is limited to unloaded operation and may be additionally limited by edb and ewb conditions or Humidi-MiZer operation.

Performance data (cont)

FAN PERFORMANCE — VERTICAL DISCHARGE UNITS (cont)

48A2,A3,A6,A7050 (50 TONS)

Airflow (Cfm)	Available External Static Pressure (in. wg)																			
	0.2		0.4		0.6		0.8		1.0		1.2		1.4		1.6		1.8		2.0	
	Rpm	Bhp	Rpm	Bhp	Rpm	Bhp	Rpm	Bhp	Rpm	Bhp	Rpm	Bhp	Rpm	Bhp	Rpm	Bhp	Rpm	Bhp	Rpm	Bhp
10,000	611	5.00	651	5.45	689	5.91	725	6.37	761	6.84	795	7.31	829	7.79	861	8.27	893	8.76	925	9.26
11,000	662	6.27	699	6.75	734	7.23	768	7.72	801	8.21	833	8.71	865	9.20	895	9.71	925	10.21	955	10.73
12,000	714	7.74	748	8.24	780	8.75	812	9.26	843	9.77	873	10.29	903	10.81	932	11.33	960	11.86	988	12.39
13,000	766	9.41	798	9.93	828	10.46	858	11.00	887	11.54	916	12.08	944	12.62	971	13.16	998	13.71	1024	14.26
14,000	819	11.29	848	11.84	877	12.39	905	12.95	932	13.51	959	14.07	986	14.63	1012	15.20	1037	15.77	1062	16.34
15,000	872	13.40	899	13.96	926	14.54	953	15.11	979	15.70	1004	16.28	1029	16.87	1054	17.46	1078	18.05	1102	18.64
16,000	925	15.74	951	16.32	976	16.91	1001	17.51	1026	18.12	1050	18.72	1074	19.33	1097	19.94	1121	20.55	1143	21.17
17,000	979	18.32	1003	18.92	1027	19.53	1051	20.15	1074	20.77	1097	21.40	1120	22.03	1142	22.66	1164	23.29	1186	23.93
18,000	1032	21.15	1055	21.77	1078	22.40	1100	23.04	1123	23.68	1145	24.33	1166	24.98	1188	25.63	1209	26.28	1230	26.93
19,000	1086	24.24	1108	24.88	1129	25.52	1151	26.18	1172	26.84	1193	27.51	1214	28.18	1234	28.85	1255	29.52	1275	30.19
20,000	1140	27.60	1161	28.25	1181	28.92	1202	29.59	1222	30.27	1242	30.95	1262	31.64	1281	32.33	—	—	—	—

48A2,A3,A6,A7050 (50 TONS) (cont)

Airflow (Cfm)	Available External Static Pressure (in. wg)																			
	2.2		2.4		2.6		2.8		3.0		3.2		3.4		3.6		3.8		4.0	
	Rpm	Bhp	Rpm	Bhp	Rpm	Bhp	Rpm	Bhp	Rpm	Bhp	Rpm	Bhp	Rpm	Bhp	Rpm	Bhp	Rpm	Bhp	Rpm	Bhp
10,000	955	9.76	985	10.27	1014	10.79	1043	11.31	1071	11.84	1098	12.37	1125	12.91	1151	13.46	1177	14.01	1202	14.56
11,000	984	11.25	1012	11.77	1040	12.30	1068	12.84	1095	13.38	1121	13.93	1147	14.49	1172	15.05	1197	15.61	1222	16.18
12,000	1016	12.93	1043	13.47	1069	14.02	1095	14.57	1121	15.13	1147	15.69	1172	16.26	1196	16.83	1220	17.41	1244	18.00
13,000	1050	14.82	1076	15.38	1101	15.94	1126	16.51	1151	17.08	1175	17.66	1199	18.24	1223	18.83	1246	19.42	1269	20.02
14,000	1087	16.92	1111	17.49	1136	18.07	1159	18.66	1183	19.25	1206	19.84	1229	20.44	1252	21.04	1274	21.64	1296	22.25
15,000	1126	19.23	1149	19.83	1172	20.43	1195	21.03	1217	21.64	1239	22.25	1261	22.86	1283	23.48	—	—	—	—
16,000	1166	21.78	1188	22.40	1210	23.01	1232	23.64	1253	24.26	1275	24.89	1296	25.52	—	—	—	—	—	—
17,000	1208	24.56	1229	25.20	1250	25.84	1271	26.48	1291	27.12	—	—	—	—	—	—	—	—	—	—
18,000	1250	27.59	1271	28.25	1291	28.91	—	—	—	—	—	—	—	—	—	—	—	—	—	—
19,000	1294	30.87	—	—	—	—	—	—	—	—	—	—	—	—	—	—	—	—	—	—
20,000	—	—	—	—	—	—	—	—	—	—	—	—	—	—	—	—	—	—	—	—

48A2,A3,A6,A7060 (60 TONS)

Airflow (Cfm)	Available External Static Pressure (in. wg)																			
	0.2		0.4		0.6		0.8		1.0		1.2		1.4		1.6		1.8		2.0	
	Rpm	Bhp	Rpm	Bhp	Rpm	Bhp	Rpm	Bhp	Rpm	Bhp	Rpm	Bhp	Rpm	Bhp	Rpm	Bhp	Rpm	Bhp	Rpm	Bhp
12,000	476	4.33	534	5.04	585	5.78	632	6.56	674	7.39	714	8.24	751	9.12	786	10.02	819	10.93	851	11.85
14,000	536	6.19	588	6.96	636	7.74	680	8.56	720	9.41	758	10.30	793	11.21	827	12.15	859	13.11	890	14.08
15,000	566	7.28	617	8.09	662	8.90	704	9.73	744	10.59	781	11.50	816	12.42	849	13.38	881	14.36	911	15.35
16,000	597	8.48	645	9.34	689	10.17	730	11.02	768	11.90	804	12.82	839	13.76	871	14.73	902	15.72	932	16.73
17,000	628	9.80	674	10.71	717	11.58	756	12.45	793	13.34	829	14.27	862	15.23	894	16.21	925	17.21	954	18.24
18,000	659	11.25	704	12.21	745	13.11	783	14.00	819	14.91	853	15.85	886	16.82	918	17.82	948	18.84	977	19.88
19,000	691	12.82	734	13.84	773	14.77	810	15.69	845	16.62	879	17.58	911	18.56	942	19.57	971	20.60	1000	21.65
20,000	723	14.53	764	15.60	802	16.57	838	17.52	872	18.47	905	19.44	936	20.44	966	21.45	995	22.50	1023	23.57
21,000	755	16.37	794	17.49	831	18.51	866	19.49	899	20.47	931	21.46	961	22.47	991	23.50	1019	24.55	1047	25.63
22,000	787	18.35	825	19.53	861	20.59	894	21.60	927	22.61	958	23.62	987	24.64	1016	25.69	1044	26.76	1071	27.84
23,000	819	20.48	856	21.71	890	22.81	923	23.87	954	24.90	985	25.93	1014	26.97	1042	28.03	1069	29.11	1096	30.21
24,000	851	22.75	887	24.04	920	25.19	952	26.28	983	27.34	1012	28.40	1041	29.46	1068	30.54	1095	31.63	1121	32.74
25,000	883	25.17	918	26.52	951	27.72	982	28.84	1011	29.94	1040	31.02	1068	32.11	1095	33.21	1121	34.31	1147	35.44
26,000	916	27.76	950	29.15	981	30.40	1011	31.57	1040	32.70	1068	33.81	1095	34.92	1122	36.04	1147	37.16	1172	38.30
27,000	948	30.49	981	31.95	1012	33.24	1041	34.46	1070	35.62	1097	36.76	1123	37.90	1149	39.04	1174	40.18	1199	41.34

48A2,A3,A6,A7060 (60 TONS) (cont)

Airflow (Cfm)	Available External Static Pressure (in. wg)																			
	2.2		2.4		2.6		2.8		3.0		3.2		3.4		3.6		3.8		4.0	
	Rpm	Bhp	Rpm	Bhp	Rpm	Bhp	Rpm	Bhp	Rpm	Bhp	Rpm	Bhp	Rpm	Bhp	Rpm	Bhp	Rpm	Bhp	Rpm	Bhp
12,000	881	12.78	911	13.72	939	14.67	967	15.62	993	16.58	1019	17.54	1045	18.51	1069	19.48	1093	20.45	1117	21.43
14,000	920	15.06	948	16.06	976	17.07	1003	18.08	1029	19.11	1054	20.13	1079	21.17	1103	22.21	1126	23.26	1149	24.31
15,000	940	16.36	968	17.38	996	18.41	1022	19.45	1048	20.50	1073	21.56	1097	22.63	1121	23.70	1144	24.78	1167	25.86
16,000	961	17.76	989	18.80	1016	19.86	1042	20.92	1067	22.00	1092	23.08	1116	24.17	1140	25.28	1162	26.38	1185	27.49
17,000	983	19.28	1010	20.34	1036	21.42	1062	22.51	1087	23.60	1112	24.71	1135	25.83	1159	26.95	1181	28.09	—	—
18,000	1005	20.94	1032	22.01	1058	23.11	1083	24.21	1108	25.33	1132	26.46	1156	27.60	1178	28.74	—	—	—	—
19,000	1027	22.72	1054	23.81	1080	24.92	1105	26.04	1129	27.18	1153	28.33	1176	29.48	1199	30.65	—	—	—	—
20,000	1050	24.65	1076	25.76	1102	26.88	1126	28.01	1151	29.17	1174	30.33	1197	31.50	—	—	—	—	—	—
21,000	1073	26.73	1099	27.84	1124	28.97	1149	30.13	1173	31.29	1196	32.47	—	—	—	—	—	—	—	—
22,000	1097	28.95	1123	30.08	1147	31.22	1172	32.39	1195	33.56	—	—	—	—	—	—	—	—	—	—
23,000	1122	31.33	1147	32.47	1171	33.63	1195	34.80	—	—	—	—	—	—	—	—	—	—	—	—
24,000	1146	33.87	1171	35.02	1195	36.19	—	—	—	—	—	—	—	—	—	—	—	—	—	—
25,000	1171	36.58	1196	37.74	—	—	—	—	—	—	—	—	—	—	—	—	—	—	—	—
26,000	1197	39.46	—	—	—	—	—	—	—	—	—	—	—	—	—	—	—	—	—	—
27,000	—	—	—	—	—	—	—	—	—	—	—	—	—	—	—	—	—	—	—	—

LEGEND

Bhp — Brake Horsepower

NOTES:

1. Fan performance is based on wet coils, economizer, roof curb, cabinet losses, and clean 2-in. filters.
2. Conversion — Bhp to watts:

$$\text{Watts} = \frac{\text{Bhp} \times 746}{\text{Motor efficiency}}$$

3. Variable air volume units will operate down to 70 cfm/ton. Performance at 70 cfm/ton is limited to unloaded operation and may be additionally limited by edb and ewb conditions or Humidi-MiZer operation.

FAN PERFORMANCE — VERTICAL DISCHARGE UNITS (cont)

50A2,A3,A6,A7 020 (20 TONS)

Airflow (Cfm)	Available External Static Pressure (In. wg)																			
	0.2		0.4		0.6		0.8		1.0		1.2		1.4		1.6		1.8		2.0	
	Rpm	Bhp	Rpm	Bhp	Rpm	Bhp	Rpm	Bhp	Rpm	Bhp	Rpm	Bhp	Rpm	Bhp	Rpm	Bhp	Rpm	Bhp	Rpm	Bhp
4,000	311	0.54	390	0.71	457	0.88	515	1.05	567	1.21	613	1.38	656	1.55	696	1.71	733	1.88	768	2.04
5,000	347	0.84	417	1.02	480	1.21	536	1.40	587	1.59	633	1.78	676	1.97	716	2.16	753	2.34	788	2.52
6,000	387	1.25	450	1.43	507	1.63	560	1.84	609	2.05	654	2.26	696	2.47	735	2.68	773	2.88	808	3.09
7,000	430	1.77	488	1.96	540	2.17	588	2.38	634	2.61	677	2.83	718	3.06	756	3.29	793	3.51	828	3.74
7,500	452	2.07	507	2.27	557	2.48	604	2.70	648	2.93	690	3.16	730	3.40	768	3.63	804	3.87	839	4.10
8,000	474	2.41	528	2.61	576	2.82	620	3.04	663	3.28	704	3.52	743	3.76	780	4.00	816	4.24	850	4.48
9,000	519	3.19	570	3.39	614	3.60	656	3.83	696	4.07	734	4.32	771	4.57	806	4.82	840	5.08	873	5.34
10,000	565	4.10	613	4.31	655	4.53	694	4.76	731	5.00	767	5.26	802	5.51	835	5.78	868	6.04	900	6.31

50A2,A3,A6,A7 020 (20 TONS) (cont)

Airflow (Cfm)	Available External Static Pressure (In. wg)																			
	2.2		2.4		2.6		2.8		3.0		3.2		3.4		3.6		3.8		4.0	
	Rpm	Bhp	Rpm	Bhp	Rpm	Bhp	Rpm	Bhp	Rpm	Bhp	Rpm	Bhp	Rpm	Bhp	Rpm	Bhp	Rpm	Bhp	Rpm	Bhp
4,000	802	2.21	833	2.38	864	2.55	893	2.71	921	2.88	949	3.06	975	3.23	1001	3.40	1026	3.58	1050	3.75
5,000	822	2.71	854	2.89	885	3.08	914	3.26	943	3.45	970	3.64	997	3.82	1023	4.01	1048	4.20	1072	4.39
6,000	842	3.29	874	3.50	905	3.70	934	3.90	963	4.10	991	4.31	1017	4.51	1043	4.71	1069	4.91	1093	5.12
7,000	862	3.96	894	4.19	924	4.41	954	4.63	983	4.85	1010	5.07	1037	5.29	1063	5.51	1089	5.72	1113	5.94
7,500	872	4.33	904	4.56	934	4.79	964	5.02	993	5.25	1020	5.48	1047	5.71	1073	5.94	1099	6.16	1123	6.39
8,000	883	4.73	914	4.97	945	5.21	974	5.45	1003	5.68	1030	5.92	1057	6.16	1083	6.39	1108	6.63	1133	6.87
9,000	905	5.60	936	5.85	966	6.11	995	6.37	1023	6.62	1051	6.88	1077	7.13	1103	7.38	1129	7.64	1153	7.89
10,000	931	6.58	961	6.85	990	7.13	1018	7.40	1046	7.67	1073	7.94	1099	8.21	1124	8.48	1149	8.75	1174	9.02

50A2,A3,A6,A7 025-030 (25 THRU 30 TONS)

Airflow (Cfm)	Available External Static Pressure (in. wg)																			
	0.2		0.4		0.6		0.8		1.0		1.2		1.4		1.6		1.8		2.0	
	Rpm	Bhp	Rpm	Bhp	Rpm	Bhp	Rpm	Bhp	Rpm	Bhp	Rpm	Bhp	Rpm	Bhp	Rpm	Bhp	Rpm	Bhp	Rpm	Bhp
5,000	352	0.85	422	1.03	484	1.22	540	1.42	590	1.61	636	1.79	678	1.98	718	2.17	755	2.35	791	2.54
6,000	394	1.26	456	1.45	513	1.65	565	1.86	613	2.07	658	2.28	700	2.49	739	2.70	776	2.90	811	3.11
7,000	438	1.79	495	1.98	546	2.19	594	2.41	640	2.64	682	2.86	723	3.09	761	3.32	798	3.54	833	3.77
8,000	483	2.44	536	2.64	583	2.85	628	3.08	670	3.32	710	3.55	749	3.80	786	4.04	821	4.28	855	4.52
9,000	530	3.23	579	3.43	623	3.65	664	3.88	704	4.12	741	4.37	778	4.62	813	4.88	847	5.13	880	5.39
10,000	577	4.15	624	4.36	665	4.58	703	4.82	740	5.06	776	5.32	810	5.58	843	5.84	876	6.11	907	6.38
11,000	625	5.22	669	5.44	708	5.67	744	5.91	779	6.16	813	6.41	845	6.68	877	6.95	907	7.22	937	7.50
12,000	674	6.45	715	6.67	753	6.90	787	7.15	820	7.40	851	7.67	882	7.93	912	8.21	941	8.49	970	8.78
13,000	722	7.85	762	8.07	798	8.30	831	8.55	862	8.81	892	9.08	921	9.35	950	9.63	977	9.92	1005	10.21
14,000	771	9.41	810	9.64	844	9.88	875	10.13	905	10.39	934	10.66	962	10.94	989	11.22	1015	11.51	1041	11.81
15,000	821	11.15	857	11.38	890	11.62	921	11.88	949	12.14	977	12.42	1004	12.70	1030	12.99	1055	13.28	1080	13.58

50A2,A3,A6,A7 025-030 (25 THRU 30 TONS) (cont)

Airflow (Cfm)	Available External Static Pressure (in. wg)																			
	2.2		2.4		2.6		2.8		3.0		3.2		3.4		3.6		3.8		4.0	
	Rpm	Bhp	Rpm	Bhp	Rpm	Bhp	Rpm	Bhp	Rpm	Bhp	Rpm	Bhp	Rpm	Bhp	Rpm	Bhp	Rpm	Bhp	Rpm	Bhp
5,000	824	2.72	856	2.91	887	3.09	916	3.28	945	3.46	972	3.65	999	3.83	1024	4.02	1049	4.21	1074	4.40
6,000	845	3.31	877	3.52	908	3.72	937	3.92	966	4.12	993	4.32	1020	4.53	1046	4.73	1071	4.93	1096	5.14
7,000	866	3.99	898	4.21	928	4.43	958	4.66	986	4.88	1014	5.10	1041	5.31	1067	5.53	1092	5.75	1116	5.97
8,000	888	4.77	919	5.01	950	5.25	979	5.49	1007	5.72	1035	5.96	1061	6.20	1087	6.43	1113	6.67	1137	6.90
9,000	912	5.65	942	5.90	972	6.16	1001	6.42	1029	6.67	1056	6.93	1083	7.18	1108	7.43	1134	7.69	1158	7.94
10,000	938	6.65	968	6.92	997	7.19	1025	7.46	1052	7.73	1079	8.00	1105	8.27	1130	8.54	1155	8.81	1180	9.08
11,000	967	7.78	995	8.07	1023	8.35	1051	8.63	1077	8.92	1103	9.20	1129	9.49	1154	9.77	1178	10.06	—	—
12,000	998	9.07	1025	9.35	1052	9.65	1078	9.94	1104	10.24	1130	10.54	1154	10.83	1179	11.13	—	—	—	—
13,000	1031	10.50	1058	10.80	1083	11.10	1109	11.40	1133	11.71	1158	12.01	1182	12.32	—	—	—	—	—	—
14,000	1067	12.10	1092	12.41	1117	12.71	1141	13.02	1165	13.33	1188	13.65	—	—	—	—	—	—	—	—
15,000	1104	13.88	1128	14.19	1152	14.50	1175	14.81	1198	15.13	—	—	—	—	—	—	—	—	—	—

LEGEND

Bhp — Brake Horsepower

NOTES:

1. Fan performance is based on wet coils, economizer, roof curb, cabinet losses, and clean 2-in. filters.
2. Conversion — Bhp to watts:

$$\text{Watts} = \frac{\text{Bhp} \times 746}{\text{Motor efficiency}}$$

3. Variable air volume units will operate down to 70 cfm/ton. Performance at 70 cfm/ton is limited to unloaded operation and may be additionally limited by edb and ewb conditions or Humidi-MiZer operation.

Performance data (cont)

FAN PERFORMANCE — VERTICAL DISCHARGE UNITS (cont)

50A2,A3,A6,A7035 (35 TONS)

AIRFLOW (Cfm)	AVAILABLE EXTERNAL STATIC PRESSURE (In. wg)																			
	0.2		0.4		0.6		0.8		1.0		1.2		1.4		1.6		1.8		2.0	
	Rpm	Bhp	Rpm	Bhp	Rpm	Bhp	Rpm	Bhp	Rpm	Bhp	Rpm	Bhp	Rpm	Bhp	Rpm	Bhp	Rpm	Bhp	Rpm	Bhp
7,000	503	1.96	553	2.22	601	2.47	646	2.72	689	2.97	730	3.22	768	3.46	804	3.70	839	3.94	872	4.17
8,000	553	2.62	599	2.89	643	3.16	684	3.43	724	3.70	763	3.97	799	4.23	834	4.50	868	4.76	901	5.02
9,000	605	3.39	647	3.68	687	3.97	726	4.26	763	4.55	798	4.83	833	5.12	867	5.40	899	5.68	930	5.96
10,000	657	4.29	696	4.61	733	4.91	769	5.22	803	5.52	837	5.82	870	6.12	901	6.42	932	6.72	962	7.02
10,500	684	4.80	721	5.12	757	5.43	791	5.75	825	6.06	857	6.37	889	6.68	920	6.98	950	7.29	979	7.60
11,000	710	5.33	747	5.66	781	5.99	814	6.31	847	6.63	878	6.95	909	7.26	939	7.58	968	7.89	997	8.21
12,000	764	6.52	798	6.86	830	7.21	861	7.54	891	7.88	921	8.21	950	8.54	978	8.87	1006	9.20	1033	9.53
13,000	818	7.85	849	8.21	880	8.57	909	8.92	938	9.27	966	9.62	993	9.97	1020	10.31	1046	10.66	1072	11.00
14,000	872	9.33	901	9.71	930	10.09	958	10.45	985	10.82	1012	11.19	1037	11.55	1063	11.91	1088	12.27	1113	12.63
15,000	926	10.98	954	11.37	981	11.76	1008	12.15	1033	12.53	1059	12.91	1083	13.28	1108	13.66	1131	14.03	1155	14.40
16,000	980	12.79	1007	13.20	1033	13.60	1058	14.00	1082	14.40	1106	14.79	1130	15.18	1153	15.57	1176	15.96	1199	16.35
17,000	1035	14.77	1060	15.19	1085	15.61	1109	16.03	1132	16.44	1155	16.84	1178	17.25	1200	17.65	1222	18.05	1243	18.46
17,500	1062	15.83	1087	16.25	1111	16.68	1134	17.10	1157	17.52	1180	17.94	1202	18.35	1224	18.76	1245	19.17	1266	19.58

50A2,A3,A6,A7035 (35 TONS) (cont)

AIRFLOW (Cfm)	AVAILABLE EXTERNAL STATIC PRESSURE (In. wg)																			
	2.2		2.4		2.6		2.8		3.0		3.2		3.4		3.6		3.8		4.0	
	Rpm	Bhp	Rpm	Bhp	Rpm	Bhp	Rpm	Bhp	Rpm	Bhp	Rpm	Bhp	Rpm	Bhp	Rpm	Bhp	Rpm	Bhp	Rpm	Bhp
7,000	903	4.40	933	4.62	962	4.84	990	5.06	1017	5.27	1043	5.48	1068	5.69	1092	5.89	1116	6.09	1139	6.28
8,000	932	5.27	962	5.52	991	5.77	1019	6.02	1045	6.26	1071	6.50	1097	6.73	1121	6.96	1145	7.19	1168	7.42
9,000	961	6.24	990	6.52	1019	6.79	1047	7.06	1073	7.33	1099	7.59	1125	7.85	1149	8.11	1173	8.37	1196	8.62
10,000	992	7.32	1020	7.62	1048	7.91	1075	8.20	1102	8.49	1127	8.78	1152	9.07	1177	9.35	1201	9.63	1224	9.91
10,500	1008	7.90	1036	8.21	1063	8.51	1090	8.82	1116	9.12	1142	9.41	1166	9.71	1191	10.01	1214	10.30	1238	10.59
11,000	1025	8.52	1052	8.84	1079	9.15	1105	9.46	1131	9.77	1156	10.08	1181	10.39	1205	10.69	1228	10.99	1252	11.29
12,000	1060	9.86	1086	10.19	1112	10.52	1137	10.85	1162	11.17	1187	11.50	1211	11.82	1234	12.15	1257	12.47	1280	12.79
13,000	1097	11.35	1122	11.69	1147	12.03	1171	12.37	1195	12.72	1219	13.06	1242	13.40	1265	13.74	1287	14.08	—	—
14,000	1137	12.98	1161	13.34	1184	13.69	1208	14.05	1231	14.41	1253	14.76	1276	15.12	1298	15.47	—	—	—	—
15,000	1178	14.77	1201	15.15	1223	15.51	1246	15.88	1268	16.25	1289	16.62	—	—	—	—	—	—	—	—
16,000	1221	16.73	1243	17.11	1264	17.50	1286	17.88	—	—	—	—	—	—	—	—	—	—	—	—
17,000	1265	18.85	1286	19.25	—	—	—	—	—	—	—	—	—	—	—	—	—	—	—	—
17,500	1287	19.98	—	—	—	—	—	—	—	—	—	—	—	—	—	—	—	—	—	—

50A2,A3,A6,A7040 (40 TONS)

Airflow (Cfm)	Available External Static Pressure (in. wg)																			
	0.2		0.4		0.6		0.8		1.0		1.2		1.4		1.6		1.8		2.0	
	Rpm	Bhp	Rpm	Bhp	Rpm	Bhp	Rpm	Bhp	Rpm	Bhp	Rpm	Bhp	Rpm	Bhp	Rpm	Bhp	Rpm	Bhp	Rpm	Bhp
8,000	475	2.69	523	3.08	569	3.47	612	3.86	653	4.26	692	4.66	730	5.07	767	5.49	802	5.92	836	6.36
9,000	521	3.53	565	3.94	606	4.36	646	4.78	684	5.20	721	5.63	757	6.06	791	6.49	825	6.94	857	7.39
10,000	568	4.52	608	4.96	646	5.40	683	5.84	719	6.29	753	6.74	787	7.20	819	7.65	851	8.11	882	8.58
11,000	615	5.68	652	6.14	687	6.60	722	7.07	755	7.55	788	8.02	819	8.50	850	8.97	880	9.46	909	9.94
12,000	663	7.01	697	7.49	730	7.98	762	8.47	794	8.97	824	9.47	854	9.96	883	10.47	912	10.97	939	11.48
13,000	712	8.53	743	9.03	774	9.54	804	10.05	834	10.57	862	11.09	891	11.61	918	12.13	945	12.66	972	13.19
14,000	760	10.24	790	10.76	819	11.29	847	11.82	875	12.36	902	12.90	929	13.45	955	13.99	981	14.54	1006	15.09
15,000	809	12.15	837	12.69	864	13.24	891	13.79	917	14.35	943	14.91	968	15.48	993	16.04	1018	16.62	1042	17.18
16,000	859	14.27	885	14.83	910	15.40	936	15.97	960	16.55	985	17.13	1009	17.71	1033	18.30	1056	18.89	1079	19.48
17,000	908	16.61	933	17.19	957	17.77	981	18.36	1004	18.96	1028	19.56	1051	20.16	1073	20.77	1096	21.38	1118	21.99
18,000	958	19.18	981	19.77	1004	20.37	1027	20.98	1049	21.60	1071	22.22	1093	22.84	1115	23.46	1136	24.09	1157	24.72
19,000	1007	21.98	1030	22.59	1052	23.21	1073	23.84	1095	24.47	1116	25.10	1137	25.74	1157	26.39	1178	27.04	1198	27.68
20,000	1057	25.02	1079	25.65	1099	26.29	1120	26.93	1140	27.58	1161	28.23	1181	28.89	—	—	—	—	—	—

50A2,A3,A6,A7040 (40 TONS) (cont)

Airflow (Cfm)	Available External Static Pressure (in. wg)																			
	2.2		2.4		2.6		2.8		3.0		3.2		3.4		3.6		3.8		4.0	
	Rpm	Bhp	Rpm	Bhp	Rpm	Bhp	Rpm	Bhp	Rpm	Bhp	Rpm	Bhp	Rpm	Bhp	Rpm	Bhp	Rpm	Bhp	Rpm	Bhp
8,000	870	6.81	902	7.26	933	7.73	964	8.20	993	8.67	1022	9.16	1050	9.65	1077	10.14	1104	10.64	1129	11.15
9,000	889	7.85	920	8.31	950	8.79	979	9.27	1008	9.75	1036	10.25	1064	10.75	1090	11.26	1117	11.77	1142	12.29
10,000	912	9.05	941	9.53	970	10.02	998	10.51	1026	11.00	1053	11.51	1080	12.02	1106	12.54	1131	13.06	1157	13.59
11,000	938	10.43	966	10.92	993	11.42	1020	11.93	1047	12.44	1073	12.95	1099	13.47	1124	14.00	1149	14.53	1173	15.07
12,000	967	11.98	993	12.49	1020	13.01	1046	13.53	1071	14.05	1096	14.58	1121	15.11	1145	15.65	1169	16.19	1192	16.74
13,000	998	13.72	1023	14.25	1049	14.78	1073	15.32	1098	15.86	1121	16.40	1145	16.95	1168	17.50	1191	18.06	1214	18.62
14,000	1031	15.64	1055	16.19	1079	16.75	1103	17.30	1126	17.86	1149	18.42	1172	18.98	1195	19.55	1217	20.12	1239	20.69
15,000	1066	17.76	1089	18.33	1112	18.90	1135	19.48	1157	20.06	1179	20.63	1201	21.21	1223	21.80	1244	22.38	1265	22.97
16,000	1102	20.08	1124	20.67	1147	21.26	1168	21.86	1190	22.46	1211	23.06	1232	23.66	1253	24.26	1274	24.86	1294	25.46
17,000	1140	22.61	1161	23.22	1182	23.84	1203	24.45	1224	25.07	1245	25.69	1265	26.31	1285	26.93	—	—	—	—
18,000	1178	25.36	1199	25.99	1219	26.63	1240	27.26	1260	27.90	1279	28.54	1299	29.18	—	—	—	—	—	—
19,000	1218	28.34	1238	28.99	—	—	—	—	—	—	—	—	—	—	—	—	—	—	—	—
20,000	—	—	—	—	—	—	—	—	—	—	—	—	—	—	—	—	—	—	—	—

LEGEND

Bhp — Brake Horsepower

NOTES:

1. Fan performance is based on wet coils, economizer, roof curb, cabinet losses, and clean 2-in. filters.
2. Conversion — Bhp to watts:

$$\text{Watts} = \frac{\text{Bhp} \times 746}{\text{Motor efficiency}}$$

3. Variable air volume units will operate down to 70 cfm/ton. Performance at 70 cfm/ton is limited to unloaded operation and may be additionally limited by edb and ewb conditions or Humidi-MiZer operation.

FAN PERFORMANCE — VERTICAL DISCHARGE UNITS (cont)

50A2,A3,A6,A7050 (50 TONS)

Airflow (Cfm)	Available External Static Pressure (In. wg)																			
	0.2		0.4		0.6		0.8		1.0		1.2		1.4		1.6		1.8		2.0	
	Rpm	Bhp	Rpm	Bhp	Rpm	Bhp	Rpm	Bhp	Rpm	Bhp	Rpm	Bhp	Rpm	Bhp	Rpm	Bhp	Rpm	Bhp	Rpm	Bhp
10,000	577	4.62	617	5.06	655	5.50	692	5.95	727	6.40	761	6.85	794	7.30	827	7.76	858	8.22	889	8.69
11,000	625	5.80	661	6.26	697	6.73	731	7.20	764	7.67	796	8.14	827	8.62	858	9.10	888	9.58	917	10.07
12,000	673	7.15	707	7.63	740	8.12	772	8.62	803	9.11	833	9.61	863	10.11	891	10.61	920	11.12	947	11.62
13,000	722	8.69	753	9.19	784	9.70	814	10.22	843	10.74	872	11.26	900	11.78	927	12.31	954	12.83	980	13.36
14,000	771	10.43	800	10.95	829	11.48	857	12.01	885	12.55	912	13.10	938	13.64	964	14.19	990	14.74	1015	15.29
15,000	821	12.37	848	12.91	875	13.46	901	14.01	928	14.57	953	15.14	978	15.70	1003	16.27	1028	16.84	1052	17.41
16,000	870	14.52	896	15.08	922	15.65	947	16.22	971	16.80	996	17.39	1020	17.97	1043	18.56	1066	19.15	1089	19.75
17,000	920	16.89	945	17.48	969	18.06	993	18.65	1016	19.25	1039	19.86	1062	20.46	1084	21.07	1107	21.68	1129	22.30
18,000	971	19.50	994	20.10	1017	20.71	1039	21.32	1061	21.93	1083	22.55	1105	23.18	1126	23.80	1148	24.44	1169	25.07
19,000	1021	22.35	1043	22.96	1065	23.59	1086	24.21	1107	24.85	1128	25.49	1149	26.13	1170	26.78	1190	27.42	1210	28.08
20,000	1071	25.43	1092	26.07	1113	26.71	1133	27.36	1154	28.01	1174	28.66	1194	29.33	1213	29.99	1233	30.65	1252	31.33

50A2,A3,A6,A7050 (50 TONS) (cont)

Airflow (Cfm)	Available External Static Pressure (In. wg)																			
	2.2		2.4		2.6		2.8		3.0		3.2		3.4		3.6		3.8		4.0	
	Rpm	Bhp	Rpm	Bhp	Rpm	Bhp	Rpm	Bhp	Rpm	Bhp	Rpm	Bhp	Rpm	Bhp	Rpm	Bhp	Rpm	Bhp	Rpm	Bhp
10,000	919	9.17	948	9.64	977	10.13	1005	10.62	1032	11.12	1059	11.63	1086	12.14	1112	12.66	1137	13.18	1162	13.71
11,000	945	10.56	973	11.05	1001	11.55	1027	12.06	1054	12.57	1080	13.09	1105	13.61	1130	14.14	1155	14.67	1179	15.21
12,000	975	12.13	1001	12.64	1027	13.16	1053	13.68	1078	14.21	1103	14.74	1128	15.27	1152	15.81	1176	16.35	1199	16.90
13,000	1006	13.89	1032	14.42	1057	14.96	1081	15.49	1105	16.03	1129	16.58	1153	17.12	1176	17.68	1199	18.23	1221	18.80
14,000	1040	15.84	1064	16.39	1088	16.94	1112	17.50	1135	18.06	1158	18.62	1180	19.18	1203	19.75	1225	20.32	1246	20.90
15,000	1075	17.99	1098	18.56	1121	19.13	1144	19.71	1166	20.29	1188	20.86	1210	21.45	1231	22.03	1253	22.62	1274	23.21
16,000	1112	20.34	1134	20.93	1156	21.53	1178	22.12	1199	22.72	1221	23.32	1241	23.92	1262	24.52	1283	25.13	—	—
17,000	1150	22.91	1172	23.52	1193	24.14	1214	24.76	1234	25.37	1255	25.99	1275	26.61	1295	27.23	—	—	—	—
18,000	1190	25.70	1210	26.34	1230	26.97	1250	27.61	1270	28.25	1290	28.89	—	—	—	—	—	—	—	—
19,000	1230	28.73	1250	29.38	1269	30.04	1289	30.70	—	—	—	—	—	—	—	—	—	—	—	—
20,000	1271	31.99	1290	32.67	—	—	—	—	—	—	—	—	—	—	—	—	—	—	—	—

50A2,A3,A6,A7060 (60 TONS)

Airflow (Cfm)	Available External Static Pressure (In. wg)																			
	0.2		0.4		0.6		0.8		1.0		1.2		1.4		1.6		1.8		2.0	
	Rpm	Bhp	Rpm	Bhp	Rpm	Bhp	Rpm	Bhp	Rpm	Bhp	Rpm	Bhp	Rpm	Bhp	Rpm	Bhp	Rpm	Bhp	Rpm	Bhp
12,000	450	4.02	509	4.71	560	5.41	605	6.12	647	6.86	686	7.62	723	8.40	757	9.21	790	10.04	821	10.89
14,000	505	5.74	558	6.49	606	7.24	649	8.01	689	8.79	727	9.59	762	10.40	795	11.24	827	12.09	857	12.96
15,000	533	6.75	584	7.53	630	8.32	672	9.11	711	9.91	748	10.73	782	11.56	815	12.41	846	13.28	876	14.17
16,000	561	7.88	610	8.68	655	9.50	696	10.32	734	11.14	770	11.98	803	12.84	836	13.71	866	14.59	896	15.49
17,000	590	9.12	637	9.95	680	10.79	720	11.64	757	12.49	792	13.35	825	14.23	857	15.12	887	16.02	916	16.94
18,000	619	10.48	664	11.33	706	12.20	744	13.07	781	13.96	815	14.84	847	15.74	878	16.65	908	17.57	937	18.50
19,000	648	11.96	692	12.84	732	13.74	769	14.64	805	15.54	838	16.45	870	17.37	900	18.30	930	19.24	958	20.19
20,000	678	13.57	719	14.47	758	15.40	795	16.32	829	17.25	862	18.19	893	19.13	923	20.08	952	21.04	979	22.01
21,000	707	15.30	748	16.24	785	17.19	821	18.14	854	19.09	886	20.05	917	21.02	946	22.00	974	22.98	1001	23.97
22,000	737	17.18	776	18.14	812	19.11	847	20.09	879	21.07	911	22.06	940	23.05	969	24.04	997	25.05	1024	26.06
23,000	767	19.20	804	20.18	840	21.17	873	22.17	905	23.18	935	24.19	965	25.21	993	26.23	1020	27.25	1046	28.28
24,000	797	21.35	833	22.36	867	23.38	900	24.40	931	25.43	961	26.47	989	27.51	1017	28.55	1044	29.60	1070	30.65
25,000	827	23.66	862	24.68	895	25.72	927	26.78	957	27.83	986	28.89	1014	29.95	1041	31.02	1068	32.09	1093	33.17
26,000	857	26.11	891	27.16	923	28.23	954	29.30	984	30.38	1012	31.46	1040	32.55	1066	33.64	1092	34.73	1117	35.83
27,000	888	28.72	920	29.79	952	30.88	982	31.97	1011	33.08	1038	34.19	1065	35.29	1091	36.40	1117	37.52	1141	38.64

50A2,A3,A6,A7060 (60 TONS) (cont)

Airflow (Cfm)	Available External Static Pressure (In. wg)																			
	2.2		2.4		2.6		2.8		3.0		3.2		3.4		3.6		3.8		4.0	
	Rpm	Bhp	Rpm	Bhp	Rpm	Bhp	Rpm	Bhp	Rpm	Bhp	Rpm	Bhp	Rpm	Bhp	Rpm	Bhp	Rpm	Bhp	Rpm	Bhp
12,000	851	11.75	880	12.63	907	13.53	934	14.45	960	15.38	985	16.32	1010	17.28	1033	18.24	1057	19.22	1079	20.22
14,000	886	13.85	915	14.76	942	15.68	968	16.62	993	17.57	1018	18.54	1042	19.52	1066	20.51	1088	21.52	1111	22.53
15,000	905	15.07	933	15.99	960	16.92	986	17.87	1011	18.83	1035	19.81	1059	20.81	1082	21.81	1105	22.82	1127	23.85
16,000	924	16.41	952	17.34	978	18.28	1004	19.25	1029	20.22	1053	21.21	1077	22.21	1100	23.22	1122	24.25	1144	25.29
17,000	944	17.86	971	18.81	997	19.77	1023	20.74	1047	21.73	1071	22.73	1095	23.74	1117	24.76	1140	25.80	1161	26.85
18,000	964	19.45	991	20.41	1017	21.38	1042	22.36	1066	23.36	1090	24.37	1113	25.40	1136	26.43	1158	27.48	1179	28.54
19,000	985	21.15	1011	22.13	1037	23.12	1061	24.11	1085	25.13	1109	26.15	1132	27.19	1154	28.24	1176	29.29	1197	30.36
20,000	1006	22.99	1032	23.98	1057	24.99	1081	26.00	1105	27.03	1128	28.06	1151	29.11	1173	30.17	1195	31.24	—	—
21,000	1028	24.97	1053	25.97	1078	26.99	1102	28.02	1126	29.06	1148	30.11	1171	31.17	1193	32.25	—	—	—	—
22,000	1050	27.08	1075	28.10	1099	29.14	1123	30.18	1146	31.24	1169	32.30	1191	33.38	—	—	—	—	—	—
23,000	1072	29.32	1097	30.37	1121	31.42	1144	32.48	1167	33.55	1190	34.64	—	—	—	—	—	—	—	—
24,000	1095	31.71	1119	32.78	1143	33.85	1166	34.93	1189	36.02	—	—	—	—	—	—	—	—	—	—
25,000	1118	34.25	1142	35.33	1165	36.42	1188	37.52	—	—	—	—	—	—	—	—	—	—	—	—
26,000	1141	36.93	1165	38.04	1188	39.15	—	—	—	—	—	—	—	—	—	—	—	—	—	—
27,000	1165	39.76	1188	40.89	—	—	—	—	—	—	—	—	—	—	—	—	—	—	—	—

LEGEND

Bhp — Brake Horsepower

NOTES:

1. Fan performance is based on wet coils, economizer, roof curb, cabinet losses, and clean 2-in. filters.
2. Conversion — Bhp to watts:

$$\text{Watts} = \frac{\text{Bhp} \times 746}{\text{Motor efficiency}}$$

3. Variable air volume units will operate down to 70 cfm/ton. Performance at 70 cfm/ton is limited to unloaded operation and may be additionally limited by edb and ewb conditions or Humidi-MIZer operation.

Performance data (cont)

FAN PERFORMANCE — HORIZONTAL DISCHARGE UNITS

48A4,A5,A8,A9 020 (20 TONS)

Airflow (Cfm)	Available External Static Pressure (In. wg)																			
	0.2		0.4		0.6		0.8		1.0		1.2		1.4		1.6		1.8		2.0	
	Rpm	Bhp	Rpm	Bhp	Rpm	Bhp	Rpm	Bhp	Rpm	Bhp	Rpm	Bhp	Rpm	Bhp	Rpm	Bhp	Rpm	Bhp	Rpm	Bhp
4,000	339	0.71	414	0.97	478	1.25	534	1.54	585	1.84	631	2.14	674	2.44	714	2.75	751	3.06	787	3.37
5,000	384	1.10	452	1.37	510	1.66	563	1.96	611	2.28	656	2.60	698	2.93	738	3.27	775	3.60	811	3.94
6,000	433	1.61	494	1.89	548	2.19	597	2.51	643	2.84	686	3.18	726	3.52	764	3.88	800	4.23	835	4.60
7,000	484	2.27	540	2.56	590	2.87	636	3.19	679	3.53	719	3.88	757	4.24	794	4.61	829	4.98	863	5.36
7,500	511	2.66	563	2.95	612	3.26	656	3.59	698	3.94	737	4.29	775	4.66	810	5.03	845	5.41	877	5.79
8,000	538	3.09	588	3.38	634	3.70	678	4.03	718	4.38	756	4.74	793	5.11	827	5.49	861	5.87	893	6.26
9,000	593	4.07	639	4.37	682	4.69	722	5.03	760	5.39	796	5.76	831	6.13	864	6.52	896	6.91	927	7.32
10,000	649	5.23	691	5.54	731	5.87	769	6.21	805	6.58	839	6.95	872	7.34	904	7.73	934	8.13	964	8.54

48A4,A5,A8,A9 020 (20 TONS) (cont)

Airflow (Cfm)	Available External Static Pressure (In. wg)																			
	2.2		2.4		2.6		2.8		3.0		3.2		3.4		3.6		3.8		4.0	
	Rpm	Bhp	Rpm	Bhp	Rpm	Bhp	Rpm	Bhp	Rpm	Bhp	Rpm	Bhp	Rpm	Bhp	Rpm	Bhp	Rpm	Bhp	Rpm	Bhp
4,000	820	3.68	852	3.99	883	4.30	912	4.62	940	4.93	967	5.25	993	5.57	1019	5.89	1043	6.21	1067	6.53
5,000	844	4.28	877	4.63	907	4.97	937	5.31	966	5.66	993	6.01	1020	6.35	1046	6.70	1071	7.05	1095	7.40
6,000	869	4.96	901	5.33	931	5.70	961	6.07	990	6.44	1017	6.81	1044	7.19	1070	7.57	1096	7.94	1121	8.32
7,000	895	5.74	926	6.13	956	6.52	986	6.91	1014	7.30	1042	7.70	1068	8.10	1094	8.50	1120	8.90	1145	9.30
7,500	909	6.18	940	6.57	970	6.97	999	7.37	1027	7.78	1054	8.18	1081	8.59	1107	9.00	1132	9.41	1157	9.82
8,000	925	6.66	955	7.06	984	7.46	1013	7.87	1040	8.28	1067	8.69	1094	9.11	1119	9.53	1144	9.95	1169	10.37
9,000	957	7.72	986	8.13	1015	8.55	1042	8.97	1069	9.39	1096	9.82	1121	10.25	1146	10.69	1171	11.12	1195	11.56
10,000	993	8.96	1021	9.38	1048	9.80	1075	10.23	1101	10.67	1126	11.11	1151	11.55	1176	12.00	1200	12.45	—	—

48A4,A5,A8,A9 025-030 (25 THRU 30 TONS)

Airflow (Cfm)	Available External Static Pressure (In. wg)																			
	0.2		0.4		0.6		0.8		1.0		1.2		1.4		1.6		1.8		2.0	
	Rpm	Bhp	Rpm	Bhp	Rpm	Bhp	Rpm	Bhp	Rpm	Bhp	Rpm	Bhp	Rpm	Bhp	Rpm	Bhp	Rpm	Bhp	Rpm	Bhp
5,000	389	1.11	456	1.38	514	1.68	566	1.98	614	2.30	659	2.62	701	2.95	740	3.29	777	3.62	813	3.96
6,000	439	1.64	499	1.92	553	2.22	602	2.54	647	2.87	689	3.21	730	3.56	768	3.91	804	4.27	838	4.63
7,000	492	2.31	548	2.60	596	2.91	641	3.24	684	3.58	724	3.93	762	4.29	798	4.66	833	5.03	867	5.41
8,000	546	3.14	596	3.43	642	3.75	684	4.09	724	4.44	762	4.80	798	5.17	833	5.55	866	5.93	898	6.32
9,000	602	4.13	647	4.43	690	4.76	730	5.10	768	5.46	803	5.83	838	6.21	871	6.60	903	7.00	933	7.40
10,000	659	5.31	701	5.62	740	5.95	777	6.30	813	6.67	847	7.04	880	7.43	911	7.83	942	8.23	971	8.64
11,000	717	6.67	755	6.99	792	7.33	827	7.68	860	8.06	893	8.44	924	8.83	954	9.24	983	9.65	1011	10.07
12,000	775	8.23	811	8.56	845	8.90	878	9.27	909	9.64	940	10.03	970	10.43	999	10.84	1026	11.26	1054	11.69
13,000	834	9.99	867	10.33	899	10.68	930	11.05	960	11.44	989	11.83	1017	12.24	1045	12.65	1072	13.08	1098	13.51
14,000	893	11.97	924	12.32	954	12.68	983	13.06	1012	13.44	1039	13.85	1066	14.26	1093	14.68	1118	15.11	1143	15.54
15,000	953	14.17	982	14.53	1010	14.90	1037	15.28	1064	15.68	1091	16.08	1116	16.50	1142	16.93	1166	17.36	1190	17.80

48A4,A5,A8,A9 025-030 (25 THRU 30 TONS) (cont)

Airflow (Cfm)	Available External Static Pressure (In. wg)																			
	2.2		2.4		2.6		2.8		3.0		3.2		3.4		3.6		3.8		4.0	
	Rpm	Bhp	Rpm	Bhp	Rpm	Bhp	Rpm	Bhp	Rpm	Bhp	Rpm	Bhp	Rpm	Bhp	Rpm	Bhp	Rpm	Bhp	Rpm	Bhp
5,000	846	4.31	879	4.65	909	4.99	939	5.34	968	5.68	995	6.03	1022	6.38	1048	6.73	1073	7.08	1097	7.43
6,000	872	5.00	903	5.36	934	5.73	964	6.10	992	6.48	1020	6.85	1047	7.22	1073	7.60	1098	7.98	1123	8.36
7,000	899	5.79	930	6.18	960	6.57	989	6.96	1018	7.36	1045	7.75	1072	8.15	1098	8.55	1123	8.95	1148	9.35
8,000	930	6.72	960	7.12	989	7.53	1017	7.94	1045	8.35	1072	8.76	1098	9.18	1124	9.60	1148	10.02	1173	10.44
9,000	963	7.80	992	8.22	1020	8.63	1048	9.06	1075	9.48	1101	9.91	1126	10.34	1151	10.78	1176	11.21	1200	11.65
10,000	1000	9.06	1028	9.48	1055	9.91	1081	10.34	1107	10.77	1133	11.22	1157	11.66	1182	12.11	—	—	—	—
11,000	1039	10.49	1066	10.92	1092	11.36	1117	11.80	1142	12.24	1167	12.69	1191	13.15	—	—	—	—	—	—
12,000	1080	12.12	1106	12.56	1131	13.00	1156	13.45	1180	13.90	—	—	—	—	—	—	—	—	—	—
13,000	1123	13.95	1148	14.39	1172	14.84	1196	15.30	—	—	—	—	—	—	—	—	—	—	—	—
14,000	1168	15.99	1192	16.44	—	—	—	—	—	—	—	—	—	—	—	—	—	—	—	—
15,000	—	—	—	—	—	—	—	—	—	—	—	—	—	—	—	—	—	—	—	—

LEGEND

Bhp — Brake Horsepower

NOTES:

1. Fan performance is based on wet coils, economizer, roof curb, cabinet losses, and clean 2-in. filters.
2. Conversion — Bhp to watts:

$$\text{Watts} = \frac{\text{Bhp} \times 746}{\text{Motor efficiency}}$$

3. Variable air volume units will operate down to 70 cfm/ton. Performance at 70 cfm/ton is limited to unloaded operation and may be additionally limited by edb and ewb conditions or Humidi-MiZer operation.

FAN PERFORMANCE — HORIZONTAL DISCHARGE UNITS (cont)

48A4,A5,A8,A9 035 (35 TONS)

AIRFLOW (Cfm)	AVAILABLE EXTERNAL STATIC PRESSURE (in. wg)																			
	0.2		0.4		0.6		0.8		1.0		1.2		1.4		1.6		1.8		2.0	
	Rpm	Bhp	Rpm	Bhp	Rpm	Bhp	Rpm	Bhp	Rpm	Bhp	Rpm	Bhp	Rpm	Bhp	Rpm	Bhp	Rpm	Bhp	Rpm	Bhp
7,000	553	2.59	602	2.92	648	3.26	691	3.61	732	3.95	770	4.29	807	4.63	842	4.96	875	5.29	907	5.62
8,000	612	3.45	656	3.81	698	4.17	738	4.53	776	4.90	812	5.27	847	5.63	881	6.00	913	6.36	944	6.72
9,000	672	4.47	712	4.86	750	5.24	787	5.62	823	6.01	857	6.39	890	6.78	922	7.17	953	7.56	983	7.95
10,000	733	5.67	769	6.08	805	6.48	839	6.88	872	7.28	904	7.69	935	8.10	966	8.51	995	8.92	1024	9.33
10,500	763	6.33	798	6.75	832	7.17	865	7.58	897	7.99	929	8.40	959	8.82	989	9.24	1017	9.66	1046	10.08
11,000	794	7.04	828	7.47	861	7.90	892	8.32	923	8.74	954	9.16	983	9.59	1012	10.01	1040	10.44	1067	10.87
12,000	855	8.60	887	9.06	918	9.51	948	9.95	977	10.39	1005	10.83	1033	11.27	1060	11.71	1087	12.16	1113	12.60
13,000	917	10.36	947	10.84	976	11.31	1004	11.77	1031	12.23	1058	12.69	1084	13.14	1110	13.60	1135	14.06	1160	14.52
14,000	980	12.32	1008	12.82	1035	13.31	1061	13.79	1087	14.27	1112	14.75	1137	15.22	1161	15.70	1185	16.17	1209	16.65
15,000	1042	14.49	1069	15.01	1094	15.52	1119	16.03	1143	16.53	1167	17.02	1191	17.51	1214	18.01	1237	18.50	1260	18.99
16,000	1105	16.88	1130	17.42	1154	17.96	1178	18.48	1201	19.00	1224	19.51	1246	20.02	1268	20.53	1290	21.04	—	—
17,000	1168	19.49	1191	20.06	1214	20.61	1237	21.16	1259	21.69	1281	22.23	—	—	—	—	—	—	—	—
17,500	1200	20.88	1222	21.46	1245	22.03	1267	22.58	1288	23.13	—	—	—	—	—	—	—	—	—	—

48A4,A5,A8,A9 035 (35 TONS) (cont)

AIRFLOW (Cfm)	AVAILABLE EXTERNAL STATIC PRESSURE (in. wg)																			
	2.2		2.4		2.6		2.8		3.0		3.2		3.4		3.6		3.8		4.0	
	Rpm	Bhp	Rpm	Bhp	Rpm	Bhp	Rpm	Bhp	Rpm	Bhp	Rpm	Bhp	Rpm	Bhp	Rpm	Bhp	Rpm	Bhp	Rpm	Bhp
7,000	937	5.94	967	6.26	995	6.57	1022	6.87	1048	7.18	1073	7.48	1098	7.78	1122	8.07	1145	8.36	1168	8.66
8,000	974	7.08	1003	7.43	1031	7.77	1058	8.12	1084	8.46	1109	8.79	1134	9.13	1158	9.46	1181	9.78	1204	10.11
9,000	1012	8.33	1041	8.72	1068	9.10	1094	9.47	1120	9.85	1145	10.22	1169	10.58	1193	10.95	1216	11.31	1239	11.66
10,000	1052	9.74	1080	10.15	1106	10.55	1132	10.96	1157	11.36	1182	11.76	1206	12.16	1229	12.55	1252	12.95	1275	13.34
10,500	1073	10.50	1100	10.92	1126	11.34	1151	11.75	1176	12.17	1201	12.59	1224	13.00	1248	13.41	1271	13.82	1293	14.22
11,000	1094	11.30	1120	11.73	1146	12.16	1171	12.59	1196	13.02	1220	13.45	1243	13.87	1266	14.30	1289	14.72	—	—
12,000	1138	13.05	1163	13.50	1188	13.95	1212	14.40	1236	14.84	1259	15.30	1282	15.74	—	—	—	—	—	—
13,000	1184	14.99	1208	15.45	1232	15.92	1255	16.39	1278	16.85	—	—	—	—	—	—	—	—	—	—
14,000	1232	17.13	1255	17.61	1278	18.09	—	—	—	—	—	—	—	—	—	—	—	—	—	—
15,000	1282	19.48	—	—	—	—	—	—	—	—	—	—	—	—	—	—	—	—	—	—
16,000	—	—	—	—	—	—	—	—	—	—	—	—	—	—	—	—	—	—	—	—
17,000	—	—	—	—	—	—	—	—	—	—	—	—	—	—	—	—	—	—	—	—
17,500	—	—	—	—	—	—	—	—	—	—	—	—	—	—	—	—	—	—	—	—

48A4,A5,A8,A9 040 (40 TONS)

Airflow (Cfm)	Available External Static Pressure (in. wg)																			
	0.2		0.4		0.6		0.8		1.0		1.2		1.4		1.6		1.8		2.0	
	Rpm	Bhp	Rpm	Bhp	Rpm	Bhp	Rpm	Bhp	Rpm	Bhp	Rpm	Bhp	Rpm	Bhp	Rpm	Bhp	Rpm	Bhp	Rpm	Bhp
8,000	526	3.10	573	3.50	617	3.91	660	4.33	700	4.75	740	5.18	778	5.62	814	6.07	850	6.53	884	7.00
9,000	579	4.08	621	4.51	662	4.95	701	5.39	738	5.83	775	6.28	810	6.74	845	7.21	878	7.69	911	8.17
10,000	633	5.24	671	5.70	709	6.16	744	6.62	779	7.09	813	7.57	846	8.05	879	8.53	910	9.03	941	9.53
11,000	687	6.59	723	7.07	757	7.56	790	8.05	823	8.54	854	9.04	885	9.54	916	10.05	945	10.56	974	11.08
12,000	742	8.15	775	8.65	807	9.17	838	9.68	868	10.20	898	10.72	927	11.24	955	11.77	983	12.30	1011	12.84
13,000	797	9.92	827	10.45	857	10.98	887	11.52	915	12.07	943	12.61	970	13.15	997	13.70	1024	14.25	1050	14.81
14,000	852	11.92	881	12.47	909	13.03	936	13.59	963	14.15	990	14.72	1016	15.29	1041	15.86	1066	16.43	1091	17.01
15,000	908	14.15	935	14.72	961	15.31	987	15.89	1013	16.48	1038	17.06	1062	17.65	1086	18.25	1110	18.84	1134	19.44
16,000	964	16.63	989	17.23	1014	17.83	1039	18.43	1063	19.04	1086	19.65	1110	20.26	1133	20.88	1156	21.49	1178	22.11
17,000	1021	19.37	1044	19.98	1068	20.60	1091	21.23	1114	21.86	1136	22.49	1158	23.12	1180	23.76	1202	24.39	1223	25.03
18,000	1077	22.37	1099	23.01	1122	23.64	1144	24.29	1165	24.94	1187	25.59	1208	26.25	1229	26.90	1250	27.56	1270	28.22
19,000	1133	25.65	1155	26.30	1176	26.96	1197	27.62	1217	28.29	1238	28.96	—	—	—	—	—	—	—	—
20,000	1190	29.21	—	—	—	—	—	—	—	—	—	—	—	—	—	—	—	—	—	—

48A4,A5,A8,A9 040 (40 TONS) (cont)

Airflow (Cfm)	Available External Static Pressure (in. wg)																			
	2.2		2.4		2.6		2.8		3.0		3.2		3.4		3.6		3.8		4.0	
	Rpm	Bhp	Rpm	Bhp	Rpm	Bhp	Rpm	Bhp	Rpm	Bhp	Rpm	Bhp	Rpm	Bhp	Rpm	Bhp	Rpm	Bhp	Rpm	Bhp
8,000	917	7.48	949	7.96	980	8.44	1010	8.94	1039	9.43	1067	9.93	1094	10.44	1121	10.95	1147	11.46	1172	11.98
9,000	942	8.66	973	9.16	1003	9.66	1033	10.17	1061	10.69	1089	11.21	1116	11.73	1142	12.26	1168	12.80	1193	13.33
10,000	971	10.03	1001	10.55	1030	11.06	1058	11.59	1086	12.12	1113	12.66	1139	13.20	1165	13.75	1190	14.30	1215	14.86
11,000	1003	11.60	1031	12.13	1059	12.67	1086	13.21	1112	13.75	1139	14.31	1164	14.86	1189	15.43	1214	15.99	1238	16.56
12,000	1038	13.38	1065	13.92	1091	14.47	1117	15.03	1142	15.59	1167	16.16	1192	16.73	1216	17.31	1240	17.89	1264	18.48
13,000	1075	15.37	1101	15.93	1126	16.50	1150	17.07	1175	17.65	1199	18.23	1222	18.82	1246	19.41	1269	20.00	1291	20.61
14,000	1115	17.59	1139	18.17	1163	18.75	1186	19.34	1210	19.94	1232	20.53	1255	21.14	1277	21.74	1300	22.35	—	—
15,000	1157	20.04	1180	20.64	1202	21.24	1225	21.85	1247	22.46	1269	23.07	1290	23.69	—	—	—	—	—	—
16,000	1200	22.73	1222	23.35	1243	23.97	1265	24.60	1286	25.23	—	—	—	—	—	—	—	—	—	—
17,000	1245	25.67	1266	26.32	1286	26.96	—	—	—	—	—	—	—	—	—	—	—	—	—	—
18,000	1290	28.88	—	—	—	—	—	—	—	—	—	—	—	—	—	—	—	—	—	—
19,000	—	—	—	—	—	—	—	—	—	—	—	—	—	—	—	—	—	—	—	—
20,000	—	—	—	—	—	—	—	—	—	—	—	—	—	—	—	—	—	—	—	—

LEGEND

Bhp — Brake Horsepower

NOTES:

1. Fan performance is based on wet coils, economizer, roof curb, cabinet losses, and clean 2-in. filters.
2. Conversion — Bhp to watts:

$$\text{Watts} = \frac{\text{Bhp} \times 746}{\text{Motor efficiency}}$$

3. Variable air volume units will operate down to 70 cfm/ton. Performance at 70 cfm/ton is limited to unloaded operation and may be additionally limited by edb and ewb conditions or Humidi-MiZer operation.

Performance data (cont)

FAN PERFORMANCE — HORIZONTAL DISCHARGE UNITS (cont)

48A4,A5,A8,A9 050 (50 TONS)

Airflow (Cfm)	Available External Static Pressure (in. wg)																			
	0.2		0.4		0.6		0.8		1.0		1.2		1.4		1.6		1.8		2.0	
	Rpm	Bhp	Rpm	Bhp	Rpm	Bhp	Rpm	Bhp	Rpm	Bhp	Rpm	Bhp	Rpm	Bhp	Rpm	Bhp	Rpm	Bhp	Rpm	Bhp
10,000	642	5.35	680	5.80	717	6.27	753	6.73	787	7.20	821	7.68	854	8.16	886	8.65	917	9.14	948	9.65
11,000	696	6.72	732	7.20	766	7.69	799	8.18	831	8.67	863	9.17	893	9.68	923	10.18	953	10.70	982	11.21
12,000	751	8.29	784	8.80	816	9.32	847	9.83	877	10.35	906	10.87	935	11.40	964	11.92	991	12.46	1019	12.99
13,000	807	10.09	837	10.62	867	11.16	896	11.70	924	12.24	952	12.78	979	13.33	1006	13.88	1032	14.43	1058	14.99
14,000	863	12.12	891	12.67	919	13.23	946	13.79	973	14.36	999	14.92	1025	15.49	1050	16.06	1075	16.64	1100	17.21
15,000	919	14.38	946	14.96	972	15.54	997	16.12	1023	16.71	1047	17.30	1072	17.89	1096	18.48	1120	19.08	1143	19.68
16,000	975	16.90	1000	17.49	1025	18.09	1049	18.70	1073	19.31	1097	19.92	1120	20.53	1143	21.15	1165	21.76	1188	22.38
17,000	1032	19.67	1056	20.29	1079	20.91	1102	21.54	1125	22.17	1147	22.80	1169	23.44	1191	24.07	1213	24.71	1234	25.35
18,000	1089	22.71	1111	23.35	1134	23.99	1155	24.64	1177	25.29	1198	25.95	1219	26.60	1240	27.26	1261	27.92	1281	28.58
19,000	1146	26.04	1167	26.69	1188	27.35	1209	28.02	1230	28.69	1250	29.37	1270	30.04	1290	30.72	—	—	—	—
20,000	1203	29.65	1224	30.32	1244	31.00	1263	31.69	1283	32.38	—	—	—	—	—	—	—	—	—	—

48A4,A5,A8,A9 050 (50 TONS) (cont)

Airflow (Cfm)	Available External Static Pressure (in. wg)																			
	2.2		2.4		2.6		2.8		3.0		3.2		3.4		3.6		3.8		4.0	
	Rpm	Bhp	Rpm	Bhp	Rpm	Bhp	Rpm	Bhp	Rpm	Bhp	Rpm	Bhp	Rpm	Bhp	Rpm	Bhp	Rpm	Bhp	Rpm	Bhp
10,000	978	10.15	1008	10.67	1036	11.19	1064	11.72	1092	12.25	1119	12.79	1145	13.33	1171	13.88	1196	14.43	1221	14.99
11,000	1010	11.74	1038	12.27	1066	12.81	1093	13.35	1119	13.90	1145	14.45	1171	15.01	1196	15.57	1220	16.14	1245	16.72
12,000	1046	13.53	1072	14.08	1098	14.63	1124	15.19	1149	15.76	1174	16.32	1199	16.90	1223	17.48	1247	18.06	1270	18.65
13,000	1084	15.55	1109	16.11	1134	16.68	1158	17.26	1182	17.84	1206	18.42	1230	19.01	1253	19.60	1276	20.20	1299	20.80
14,000	1124	17.79	1148	18.38	1171	18.97	1195	19.55	1218	20.15	1241	20.75	1263	21.35	1285	21.96	—	—	—	—
15,000	1166	20.27	1189	20.88	1211	21.49	1234	22.09	1256	22.71	1277	23.32	1299	23.94	—	—	—	—	—	—
16,000	1210	23.00	1231	23.62	1253	24.25	1274	24.88	1295	25.51	—	—	—	—	—	—	—	—	—	—
17,000	1255	25.99	1276	26.63	1296	27.27	—	—	—	—	—	—	—	—	—	—	—	—	—	—
18,000	—	—	—	—	—	—	—	—	—	—	—	—	—	—	—	—	—	—	—	—
19,000	—	—	—	—	—	—	—	—	—	—	—	—	—	—	—	—	—	—	—	—
20,000	—	—	—	—	—	—	—	—	—	—	—	—	—	—	—	—	—	—	—	—

48A4,A5,A8,A9 060 (60 TONS)

Airflow (Cfm)	Available External Static Pressure (in. wg)																			
	0.2		0.4		0.6		0.8		1.0		1.2		1.4		1.6		1.8		2.0	
	Rpm	Bhp	Rpm	Bhp	Rpm	Bhp	Rpm	Bhp	Rpm	Bhp	Rpm	Bhp	Rpm	Bhp	Rpm	Bhp	Rpm	Bhp	Rpm	Bhp
12,000	516	4.81	569	5.54	617	6.30	660	7.10	701	7.93	739	8.79	774	9.68	808	10.59	841	11.52	872	12.46
14,000	584	6.90	632	7.69	676	8.50	716	9.33	754	10.20	790	11.10	824	12.02	857	12.97	888	13.94	917	14.92
15,000	619	8.13	664	8.96	706	9.79	745	10.65	782	11.53	817	12.44	850	13.38	882	14.35	912	15.33	941	16.34
16,000	654	9.49	697	10.36	737	11.22	775	12.10	811	13.00	845	13.93	877	14.88	908	15.86	938	16.86	966	17.88
17,000	689	10.99	730	11.90	769	12.79	806	13.69	840	14.61	873	15.56	904	16.53	935	17.52	964	18.54	992	19.58
18,000	725	12.64	764	13.58	801	14.51	837	15.43	870	16.38	902	17.34	933	18.32	962	19.33	990	20.36	1018	21.41
19,000	760	14.43	798	15.41	834	16.37	868	17.32	900	18.29	932	19.27	961	20.27	990	21.29	1018	22.34	1045	23.40
20,000	796	16.37	833	17.39	867	18.39	900	19.37	931	20.36	962	21.36	991	22.38	1019	23.42	1046	24.48	1072	25.56
21,000	832	18.47	867	19.54	901	20.56	932	21.57	963	22.59	992	23.61	1020	24.65	1048	25.71	1074	26.78	1100	27.87
22,000	869	20.74	902	21.84	934	22.90	965	23.94	995	24.98	1023	26.03	1051	27.09	1077	28.17	1103	29.26	1129	30.36
23,000	905	23.17	937	24.31	968	25.40	998	26.48	1027	27.55	1055	28.62	1081	29.70	1107	30.79	1133	31.90	1157	33.02
24,000	942	25.78	973	26.95	1003	28.08	1032	29.18	1059	30.28	1086	31.38	1113	32.48	1138	33.59	1163	34.72	1187	35.86
25,000	978	28.56	1008	29.77	1037	30.93	1065	32.07	1092	33.20	1119	34.32	1144	35.44	1169	36.58	1193	37.72	—	—
26,000	1015	31.52	1044	32.76	1072	33.96	1099	35.13	1125	36.29	1151	37.44	1176	38.59	—	—	—	—	—	—
27,000	1052	34.66	1080	35.94	1107	37.18	1133	38.38	1159	39.57	1184	40.75	—	—	—	—	—	—	—	—

48A4,A5,A8,A9 060 (60 TONS) (cont)

Airflow (Cfm)	Available External Static Pressure (in. wg)																			
	2.2		2.4		2.6		2.8		3.0		3.2		3.4		3.6		3.8		4.0	
	Rpm	Bhp	Rpm	Bhp	Rpm	Bhp	Rpm	Bhp	Rpm	Bhp	Rpm	Bhp	Rpm	Bhp	Rpm	Bhp	Rpm	Bhp	Rpm	Bhp
12,000	901	13.42	930	14.38	958	15.36	985	16.34	1011	17.33	1036	18.33	1061	19.33	1085	20.34	1108	21.35	1131	22.36
14,000	946	15.92	974	16.94	1001	17.97	1027	19.01	1052	20.06	1077	21.12	1101	22.18	1125	23.25	1148	24.33	1170	25.42
15,000	970	17.36	997	18.40	1024	19.45	1049	20.51	1074	21.58	1099	22.67	1122	23.76	1146	24.86	1168	25.97	1191	27.08
16,000	994	18.93	1021	19.98	1047	21.05	1072	22.14	1097	23.23	1121	24.34	1144	25.45	1167	26.58	1190	27.71	—	—
17,000	1019	20.63	1045	21.70	1071	22.79	1096	23.89	1120	25.01	1144	26.13	1167	27.27	1190	28.42	—	—	—	—
18,000	1045	22.48	1070	23.57	1096	24.67	1120	25.79	1144	26.93	1167	28.07	1190	29.23	—	—	—	—	—	—
19,000	1071	24.49	1096	25.59	1121	26.71	1145	27.84	1169	28.99	1192	30.16	—	—	—	—	—	—	—	—
20,000	1098	26.66	1123	27.77	1147	28.90	1171	30.05	1194	31.21	—	—	—	—	—	—	—	—	—	—
21,000	1125	28.99	1150	30.12	1173	31.26	1197	32.42	—	—	—	—	—	—	—	—	—	—	—	—
22,000	1153	31.49	1177	32.63	—	—	—	—	—	—	—	—	—	—	—	—	—	—	—	—
23,000	1181	34.16	—	—	—	—	—	—	—	—	—	—	—	—	—	—	—	—	—	—
24,000	—	—	—	—	—	—	—	—	—	—	—	—	—	—	—	—	—	—	—	—
25,000	—	—	—	—	—	—	—	—	—	—	—	—	—	—	—	—	—	—	—	—
26,000	—	—	—	—	—	—	—	—	—	—	—	—	—	—	—	—	—	—	—	—
27,000	—	—	—	—	—	—	—	—	—	—	—	—	—	—	—	—	—	—	—	—

LEGEND

Bhp — Brake Horsepower

NOTES:

1. Fan performance is based on wet coils, economizer, roof curb, cabinet losses, and clean 2-in. filters.
2. Conversion — Bhp to watts:

$$\text{Watts} = \frac{\text{Bhp} \times 746}{\text{Motor efficiency}}$$

3. Variable air volume units will operate down to 70 cfm/ton. Performance at 70 cfm/ton is limited to unloaded operation and may be additionally limited by edb and ewb conditions or Humidi-MiZer operation.

FAN PERFORMANCE — HORIZONTAL DISCHARGE UNITS (cont)

50A4,A5,A8,A9 020 (20 TONS)

Airflow (Cfm)	Available External Static Pressure (In. wg)																			
	0.2		0.4		0.6		0.8		1.0		1.2		1.4		1.6		1.8		2.0	
	Rpm	Bhp	Rpm	Bhp	Rpm	Bhp	Rpm	Bhp	Rpm	Bhp	Rpm	Bhp	Rpm	Bhp	Rpm	Bhp	Rpm	Bhp	Rpm	Bhp
4,000	322	0.62	399	0.82	464	1.04	521	1.26	572	1.48	619	1.71	662	1.93	702	2.16	739	2.38	774	2.61
5,000	361	0.95	431	1.17	491	1.41	545	1.65	594	1.89	640	2.14	682	2.39	722	2.64	759	2.89	795	3.14
6,000	405	1.41	467	1.64	524	1.88	574	2.14	621	2.40	664	2.67	705	2.93	744	3.20	780	3.47	816	3.75
7,000	451	2.00	508	2.22	559	2.48	607	2.75	651	3.02	693	3.30	732	3.58	769	3.87	804	4.16	839	4.45
7,500	475	2.34	529	2.57	579	2.82	625	3.10	668	3.38	708	3.66	746	3.96	783	4.25	818	4.55	851	4.84
8,000	500	2.72	551	2.95	598	3.21	643	3.48	685	3.77	724	4.06	762	4.36	797	4.66	832	4.96	864	5.27
9,000	550	3.60	596	3.83	640	4.09	682	4.36	721	4.66	759	4.96	795	5.27	829	5.58	862	5.90	893	6.22
10,000	601	4.63	644	4.86	684	5.12	723	5.40	760	5.70	796	6.01	830	6.33	863	6.65	894	6.98	925	7.31

50A4,A5,A8,A9 020 (20 TONS) (cont)

Airflow (Cfm)	Available External Static Pressure (in. wg)																			
	2.2		2.4		2.6		2.8		3.0		3.2		3.4		3.6		3.8		4.0	
	Rpm	Bhp	Rpm	Bhp	Rpm	Bhp	Rpm	Bhp	Rpm	Bhp	Rpm	Bhp	Rpm	Bhp	Rpm	Bhp	Rpm	Bhp	Rpm	Bhp
4,000	808	2.84	840	3.06	870	3.29	900	3.52	928	3.75	955	3.98	981	4.21	1007	4.44	1031	4.67	1055	4.91
5,000	829	3.39	861	3.64	892	3.89	922	4.14	950	4.40	978	4.65	1005	4.90	1031	5.16	1056	5.41	1080	5.67
6,000	849	4.02	881	4.29	912	4.57	942	4.84	971	5.12	999	5.39	1026	5.67	1052	5.94	1077	6.22	1102	6.49
7,000	871	4.74	903	5.03	933	5.33	963	5.62	991	5.92	1019	6.21	1046	6.51	1072	6.80	1098	7.10	1123	7.40
7,500	883	5.14	915	5.44	945	5.75	974	6.05	1002	6.35	1030	6.66	1057	6.96	1083	7.27	1108	7.58	1133	7.88
8,000	896	5.58	927	5.89	957	6.20	985	6.51	1014	6.82	1041	7.13	1067	7.45	1093	7.76	1118	8.08	1143	8.39
9,000	924	6.54	954	6.86	983	7.19	1011	7.51	1038	7.84	1064	8.17	1090	8.50	1116	8.83	1141	9.16	1165	9.49
10,000	954	7.64	983	7.98	1011	8.31	1038	8.65	1065	8.99	1091	9.34	1116	9.68	1141	10.02	1165	10.37	1189	10.72

50A4,A5,A8,A9 025-030 (25 THRU 30 TONS)

Airflow (Cfm)	Available External Static Pressure (In. wg)																			
	0.2		0.4		0.6		0.8		1.0		1.2		1.4		1.6		1.8		2.0	
	Rpm	Bhp	Rpm	Bhp	Rpm	Bhp	Rpm	Bhp	Rpm	Bhp	Rpm	Bhp	Rpm	Bhp	Rpm	Bhp	Rpm	Bhp	Rpm	Bhp
5,000	366	0.97	435	1.19	495	1.42	548	1.67	597	1.91	642	2.16	685	2.41	724	2.65	762	2.90	797	3.16
6,000	411	1.43	473	1.66	529	1.91	579	2.16	625	2.43	668	2.69	709	2.96	747	3.23	784	3.50	819	3.77
7,000	459	2.02	515	2.25	566	2.51	613	2.78	657	3.06	698	3.34	737	3.62	774	3.91	809	4.20	843	4.49
8,000	508	2.76	559	2.99	606	3.25	650	3.53	691	3.82	731	4.11	768	4.41	803	4.71	837	5.01	870	5.32
9,000	560	3.64	605	3.88	649	4.14	690	4.42	729	4.72	766	5.02	802	5.33	835	5.64	868	5.96	900	6.28
10,000	612	4.68	654	4.92	694	5.19	732	5.47	769	5.77	804	6.09	838	6.40	870	6.73	902	7.06	932	7.39
11,000	665	5.89	703	6.14	740	6.41	776	6.69	811	7.00	844	7.31	876	7.64	907	7.97	937	8.31	967	8.65
12,000	718	7.28	754	7.53	788	7.80	822	8.09	854	8.39	886	8.71	916	9.04	946	9.38	975	9.72	1003	10.07
13,000	772	8.85	806	9.11	838	9.38	869	9.67	899	9.98	929	10.30	958	10.63	987	10.97	1014	11.32	1041	11.68
14,000	826	10.61	858	10.87	888	11.15	917	11.44	946	11.75	974	12.07	1002	12.41	1029	12.75	1055	13.10	1081	13.46
15,000	881	12.57	910	12.84	939	13.12	967	13.41	994	13.72	1021	14.05	1047	14.38	1073	14.73	1098	15.08	1123	15.45

50A4,A5,A8,A9 025-030 (25 THRU 30 TONS) (cont)

Airflow (Cfm)	Available External Static Pressure (In. wg)																			
	2.2		2.4		2.6		2.8		3.0		3.2		3.4		3.6		3.8		4.0	
	Rpm	Bhp	Rpm	Bhp	Rpm	Bhp	Rpm	Bhp	Rpm	Bhp	Rpm	Bhp	Rpm	Bhp	Rpm	Bhp	Rpm	Bhp	Rpm	Bhp
5,000	831	3.41	863	3.66	894	3.91	924	4.16	952	4.41	980	4.67	1007	4.92	1032	5.17	1057	5.43	1082	5.68
6,000	852	4.05	884	4.32	915	4.59	945	4.87	974	5.14	1001	5.42	1028	5.69	1054	5.97	1080	6.24	1105	6.52
7,000	875	4.78	907	5.07	937	5.37	967	5.66	995	5.95	1023	6.25	1049	6.55	1076	6.84	1101	7.14	1126	7.44
8,000	901	5.63	932	5.94	961	6.25	990	6.56	1018	6.87	1045	7.18	1072	7.50	1097	7.81	1123	8.13	1147	8.44
9,000	930	6.60	960	6.93	988	7.25	1016	7.58	1043	7.91	1070	8.23	1096	8.57	1121	8.90	1146	9.23	1170	9.56
10,000	961	7.72	990	8.06	1018	8.40	1045	8.74	1071	9.08	1097	9.42	1122	9.76	1147	10.11	1171	10.46	1194	10.80
11,000	995	8.99	1022	9.34	1049	9.69	1075	10.04	1101	10.39	1126	10.75	1151	11.11	1175	11.47	1198	11.82	—	—
12,000	1030	10.43	1057	10.78	1083	11.14	1108	11.51	1133	11.87	1157	12.24	1181	12.61	—	—	—	—	—	—
13,000	1068	12.04	1093	12.40	1119	12.77	1143	13.14	1167	13.52	1191	13.89	—	—	—	—	—	—	—	—
14,000	1107	13.83	1131	14.20	1156	14.58	1179	14.96	—	—	—	—	—	—	—	—	—	—	—	—
15,000	1147	15.82	1171	16.19	1194	16.58	—	—	—	—	—	—	—	—	—	—	—	—	—	—

LEGEND

Bhp — Brake Horsepower

NOTES:

1. Fan performance is based on wet coils, economizer, roof curb, cabinet losses, and clean 2-in. filters.
2. Conversion — Bhp to watts:

$$\text{Watts} = \frac{\text{Bhp} \times 746}{\text{Motor efficiency}}$$

3. Variable air volume units will operate down to 70 cfm/ton. Performance at 70 cfm/ton is limited to unloaded operation and may be additionally limited by edb and ewb conditions or Humidi-MiZer operation.

Performance data (cont)

FAN PERFORMANCE — HORIZONTAL DISCHARGE UNITS (cont)

50A4,A5,A8,A9 035 (35 TONS)

AIRFLOW (Cfm)	AVAILABLE EXTERNAL STATIC PRESSURE (In. wg)																			
	0.2		0.4		0.6		0.8		1.0		1.2		1.4		1.6		1.8		2.0	
	Rpm	Bhp	Rpm	Bhp	Rpm	Bhp	Rpm	Bhp	Rpm	Bhp	Rpm	Bhp	Rpm	Bhp	Rpm	Bhp	Rpm	Bhp	Rpm	Bhp
7,000	522	2.06	573	2.32	620	2.57	664	2.82	705	3.06	744	3.30	780	3.54	815	3.78	849	4.01	881	4.24
8,000	576	2.75	622	3.03	665	3.30	706	3.57	745	3.84	782	4.10	817	4.36	850	4.62	883	4.87	914	5.12
9,000	630	3.57	672	3.86	712	4.16	750	4.45	787	4.74	822	5.02	855	5.30	888	5.58	919	5.86	949	6.13
10,000	686	4.52	724	4.84	761	5.15	797	5.46	831	5.77	864	6.07	896	6.37	927	6.67	957	6.97	986	7.26
10,500	714	5.05	750	5.38	786	5.70	821	6.02	854	6.34	886	6.65	917	6.96	947	7.27	977	7.57	1005	7.87
11,000	742	5.62	777	5.95	811	6.28	845	6.61	877	6.94	909	7.26	939	7.58	968	7.90	997	8.21	1025	8.52
12,000	799	6.88	831	7.22	863	7.57	894	7.91	925	8.25	954	8.60	983	8.93	1011	9.27	1039	9.60	1065	9.93
13,000	856	8.29	886	8.65	916	9.01	945	9.37	974	9.72	1002	10.08	1029	10.44	1056	10.79	1082	11.14	1108	11.49
14,000	914	9.87	942	10.24	969	10.61	997	10.98	1024	11.36	1050	11.73	1076	12.10	1102	12.47	1127	12.84	1152	13.20
15,000	971	11.62	998	12.00	1024	12.39	1050	12.77	1075	13.16	1100	13.54	1125	13.93	1149	14.31	1173	14.70	1197	15.08
16,000	1029	13.55	1054	13.94	1079	14.34	1103	14.74	1127	15.13	1151	15.53	1174	15.93	1198	16.33	1220	16.73	1243	17.12
17,000	1088	15.66	1111	16.07	1134	16.47	1157	16.88	1180	17.29	1203	17.70	1225	18.11	1247	18.53	1269	18.93	1290	19.34
17,500	1117	16.79	1140	17.20	1162	17.61	1184	18.02	1207	18.44	1229	18.86	1250	19.27	1272	19.69	1293	20.11	—	—

50A4,A5,A8,A9 035 (35 TONS) (cont)

AIRFLOW (Cfm)	AVAILABLE EXTERNAL STATIC PRESSURE (In. wg)																			
	2.2		2.4		2.6		2.8		3.0		3.2		3.4		3.6		3.8		4.0	
	Rpm	Bhp	Rpm	Bhp	Rpm	Bhp	Rpm	Bhp	Rpm	Bhp	Rpm	Bhp	Rpm	Bhp	Rpm	Bhp	Rpm	Bhp	Rpm	Bhp
7,000	912	4.46	942	4.68	970	4.90	998	5.12	1025	5.33	1051	5.54	1076	5.75	1101	5.96	1124	6.16	1148	6.36
8,000	944	5.37	973	5.62	1001	5.86	1029	6.11	1055	6.35	1081	6.58	1106	6.82	1130	7.05	1154	7.28	1177	7.51
9,000	978	6.40	1006	6.67	1034	6.93	1060	7.20	1086	7.46	1112	7.72	1136	7.98	1160	8.23	1184	8.49	1207	8.74
10,000	1014	7.55	1041	7.84	1068	8.12	1094	8.41	1119	8.69	1144	8.97	1168	9.25	1192	9.52	1215	9.80	1238	10.07
10,500	1033	8.17	1059	8.47	1086	8.77	1111	9.06	1136	9.35	1161	9.64	1184	9.93	1208	10.22	1231	10.50	1253	10.79
11,000	1052	8.83	1078	9.14	1104	9.44	1129	9.75	1154	10.05	1178	10.35	1201	10.64	1224	10.94	1247	11.23	1269	11.53
12,000	1091	10.26	1117	10.58	1142	10.90	1166	11.23	1190	11.54	1213	11.86	1236	12.18	1259	12.49	1281	12.80	—	—
13,000	1133	11.83	1157	12.17	1181	12.51	1205	12.85	1228	13.19	1251	13.52	1273	13.86	1295	14.19	—	—	—	—
14,000	1176	13.56	1199	13.92	1222	14.28	1245	14.63	1268	14.99	1290	15.34	—	—	—	—	—	—	—	—
15,000	1220	15.45	1243	15.83	1265	16.20	1287	16.58	—	—	—	—	—	—	—	—	—	—	—	—
16,000	1265	17.52	1287	17.91	—	—	—	—	—	—	—	—	—	—	—	—	—	—	—	—
17,000	—	—	—	—	—	—	—	—	—	—	—	—	—	—	—	—	—	—	—	—
17,500	—	—	—	—	—	—	—	—	—	—	—	—	—	—	—	—	—	—	—	—

50A4,A5,A8,A9 040 (40 TONS)

Airflow (Cfm)	Available External Static Pressure (in. wg)																			
	0.2		0.4		0.6		0.8		1.0		1.2		1.4		1.6		1.8		2.0	
	Rpm	Bhp	Rpm	Bhp	Rpm	Bhp	Rpm	Bhp	Rpm	Bhp	Rpm	Bhp	Rpm	Bhp	Rpm	Bhp	Rpm	Bhp	Rpm	Bhp
8,000	499	2.88	546	3.27	590	3.66	632	4.06	672	4.46	711	4.87	748	5.28	784	5.70	819	6.14	853	6.58
9,000	548	3.78	591	4.20	631	4.62	670	5.04	708	5.47	744	5.90	778	6.33	812	6.77	845	7.22	877	7.67
10,000	599	4.86	637	5.30	675	5.74	711	6.19	746	6.64	779	7.09	812	7.55	844	8.01	875	8.47	905	8.94
11,000	649	6.11	685	6.57	720	7.04	753	7.51	786	7.99	817	8.47	848	8.94	878	9.43	907	9.91	936	10.40
12,000	701	7.54	734	8.03	766	8.52	797	9.02	828	9.52	857	10.02	886	10.52	915	11.03	943	11.53	970	12.04
13,000	753	9.18	783	9.69	813	10.21	842	10.72	871	11.25	899	11.77	927	12.30	953	12.82	980	13.35	1006	13.88
14,000	805	11.03	833	11.56	861	12.09	889	12.63	916	13.18	942	13.73	968	14.27	994	14.82	1019	15.37	1044	15.92
15,000	857	13.09	884	13.64	910	14.20	936	14.76	962	15.32	987	15.89	1011	16.46	1036	17.03	1060	17.61	1083	18.18
16,000	910	15.38	935	15.95	960	16.53	984	17.11	1008	17.69	1032	18.28	1056	18.87	1079	19.47	1101	20.06	1124	20.66
17,000	963	17.91	986	18.50	1010	19.09	1033	19.69	1056	20.30	1078	20.91	1101	21.52	1123	22.13	1145	22.75	1166	23.36
18,000	1016	20.68	1038	21.29	1060	21.90	1082	22.52	1104	23.15	1126	23.77	1147	24.41	1168	25.04	1189	25.67	1209	26.31
19,000	1069	23.71	1090	24.33	1111	24.96	1132	25.60	1153	26.25	1173	26.89	1194	27.54	1214	28.19	1234	28.85	—	—
20,000	1122	26.99	1142	27.64	1162	28.29	1182	28.95	—	—	—	—	—	—	—	—	—	—	—	—

50A4,A5,A8,A9 040 (40 TONS) (cont)

Airflow (Cfm)	Available External Static Pressure (in. wg)																			
	2.2		2.4		2.6		2.8		3.0		3.2		3.4		3.6		3.8		4.0	
	Rpm	Bhp	Rpm	Bhp	Rpm	Bhp	Rpm	Bhp	Rpm	Bhp	Rpm	Bhp	Rpm	Bhp	Rpm	Bhp	Rpm	Bhp	Rpm	Bhp
8,000	885	7.03	917	7.48	948	7.95	978	8.42	1007	8.90	1036	9.39	1063	9.88	1090	10.38	1116	10.88	1142	11.39
9,000	908	8.13	939	8.60	968	9.08	997	9.56	1026	10.05	1053	10.55	1080	11.05	1107	11.56	1133	12.08	1158	12.60
10,000	934	9.42	963	9.90	992	10.39	1020	10.89	1047	11.39	1073	11.89	1100	12.41	1125	12.93	1151	13.45	1175	13.99
11,000	964	10.89	992	11.39	1019	11.89	1045	12.40	1071	12.91	1097	13.43	1122	13.96	1147	14.49	1171	15.02	1195	15.56
12,000	996	12.55	1023	13.07	1048	13.59	1074	14.11	1099	14.64	1123	15.17	1147	15.71	1171	16.25	1195	16.80	1218	17.35
13,000	1031	14.41	1056	14.95	1081	15.48	1105	16.03	1129	16.57	1152	17.12	1175	17.67	1198	18.22	1221	18.78	1243	19.35
14,000	1068	16.48	1092	17.03	1115	17.59	1138	18.15	1161	18.71	1184	19.27	1206	19.84	1228	20.41	1250	20.99	1271	21.56
15,000	1106	18.75	1129	19.33	1151	19.91	1174	20.48	1196	21.07	1217	21.65	1239	22.23	1260	22.82	1280	23.41	—	—
16,000	1146	21.25	1168	21.85	1189	22.45	1211	23.04	1232	23.64	1253	24.25	1273	24.85	1293	25.45	—	—	—	—
17,000	1187	23.98	1208	24.60	1229	25.21	1249	25.83	1270	26.46	1289	27.07	—	—	—	—	—	—	—	—
18,000	1230	26.95	1250	27.58	1269	28.22	1289	28.86	—	—	—	—	—	—	—	—	—	—	—	—
19,000	—	—	—	—	—	—	—	—	—	—	—	—	—	—	—	—	—	—	—	—
20,000	—	—	—	—	—	—	—	—	—	—	—	—	—	—	—	—	—	—	—	—

LEGEND

Bhp — Brake Horsepower

NOTES:

1. Fan performance is based on wet coils, economizer, roof curb, cabinet losses, and clean 2-in. filters.
2. Conversion — Bhp to watts:

$$\text{Watts} = \frac{\text{Bhp} \times 746}{\text{Motor efficiency}}$$

3. Variable air volume units will operate down to 70 cfm/ton. Performance at 70 cfm/ton is limited to unloaded operation and may be additionally limited by edb and ewb conditions or Humidi-MiZer operation.

FAN PERFORMANCE — HORIZONTAL DISCHARGE UNITS (cont)

50A4,A5,A8,A9 050 (50 TONS)

Airflow (Cfm)	Available External Static Pressure (In. wg)																			
	0.2		0.4		0.6		0.8		1.0		1.2		1.4		1.6		1.8		2.0	
	Rpm	Bhp	Rpm	Bhp	Rpm	Bhp	Rpm	Bhp	Rpm	Bhp	Rpm	Bhp	Rpm	Bhp	Rpm	Bhp	Rpm	Bhp	Rpm	Bhp
10,000	608	4.96	646	5.40	683	5.85	719	6.30	754	6.75	787	7.20	819	7.66	851	8.12	882	8.58	912	9.06
11,000	659	6.23	694	6.69	728	7.16	762	7.64	794	8.11	825	8.59	856	9.07	886	9.55	915	10.04	943	10.53
12,000	710	7.68	743	8.17	775	8.67	806	9.17	836	9.67	866	10.17	895	10.67	923	11.17	950	11.68	978	12.19
13,000	763	9.35	793	9.86	823	10.37	852	10.89	880	11.42	908	11.94	935	12.47	962	12.99	988	13.52	1014	14.05
14,000	815	11.22	843	11.75	871	12.29	899	12.83	925	13.38	952	13.92	978	14.47	1003	15.02	1028	15.57	1052	16.12
15,000	868	13.31	895	13.86	921	14.42	946	14.98	972	15.55	997	16.12	1021	16.69	1045	17.26	1069	17.83	1092	18.41
16,000	921	15.64	946	16.21	971	16.78	995	17.37	1019	17.96	1043	18.54	1066	19.14	1089	19.73	1111	20.32	1134	20.92
17,000	974	18.20	998	18.79	1021	19.39	1044	19.99	1067	20.60	1089	21.21	1112	21.82	1134	22.43	1155	23.05	1176	23.66
18,000	1028	21.01	1050	21.62	1072	22.24	1094	22.86	1116	23.49	1137	24.12	1158	24.75	1179	25.38	1200	26.02	1220	26.65
19,000	1081	24.08	1103	24.71	1124	25.35	1145	25.99	1165	26.63	1185	27.28	1206	27.93	1226	28.58	1245	29.24	1265	29.90
20,000	1135	27.42	1155	28.06	1175	28.72	1195	29.38	1215	30.04	1234	30.71	1254	31.38	1273	32.05	1292	32.72	—	—

50A4,A5,A8,A9 050 (50 TONS) (cont)

Airflow (Cfm)	Available External Static Pressure (In. wg)																			
	2.2		2.4		2.6		2.8		3.0		3.2		3.4		3.6		3.8		4.0	
	Rpm	Bhp	Rpm	Bhp	Rpm	Bhp	Rpm	Bhp	Rpm	Bhp	Rpm	Bhp	Rpm	Bhp	Rpm	Bhp	Rpm	Bhp	Rpm	Bhp
10,000	941	9.53	970	10.02	998	10.51	1026	11.00	1053	11.51	1080	12.01	1106	12.53	1131	13.05	1156	13.58	1181	14.11
11,000	971	11.02	999	11.52	1026	12.02	1052	12.53	1078	13.05	1103	13.57	1128	14.09	1153	14.63	1177	15.16	1201	15.71
12,000	1004	12.70	1030	13.22	1056	13.74	1081	14.26	1106	14.79	1130	15.33	1154	15.86	1178	16.41	1201	16.96	1224	17.51
13,000	1039	14.59	1064	15.12	1088	15.66	1113	16.20	1136	16.74	1160	17.29	1183	17.85	1206	18.40	1228	18.96	1250	19.53
14,000	1076	16.68	1100	17.23	1123	17.79	1147	18.35	1169	18.91	1192	19.48	1214	20.04	1236	20.62	1257	21.19	1279	21.77
15,000	1115	18.98	1138	19.56	1160	20.14	1182	20.72	1204	21.30	1226	21.88	1247	22.47	1268	23.05	1289	23.65	—	—
16,000	1156	21.52	1178	22.11	1199	22.71	1220	23.31	1241	23.91	1262	24.51	1282	25.12	—	—	—	—	—	—
17,000	1198	24.28	1218	24.90	1239	25.52	1259	26.14	1279	26.76	1299	27.38	—	—	—	—	—	—	—	—
18,000	1240	27.29	1260	27.93	1280	28.57	1300	29.21	—	—	—	—	—	—	—	—	—	—	—	—
19,000	1284	30.55	—	—	—	—	—	—	—	—	—	—	—	—	—	—	—	—	—	—
20,000	—	—	—	—	—	—	—	—	—	—	—	—	—	—	—	—	—	—	—	—

50A4,A5,A8,A9 060 (60 TONS)

Airflow (Cfm)	Available External Static Pressure (In. wg)																			
	0.2		0.4		0.6		0.8		1.0		1.2		1.4		1.6		1.8		2.0	
	Rpm	Bhp	Rpm	Bhp	Rpm	Bhp	Rpm	Bhp	Rpm	Bhp	Rpm	Bhp	Rpm	Bhp	Rpm	Bhp	Rpm	Bhp	Rpm	Bhp
12,000	490	4.48	543	5.17	591	5.88	634	6.61	674	7.37	711	8.14	746	8.94	779	9.76	811	10.60	841	11.45
14,000	554	6.41	602	7.17	645	7.94	686	8.72	723	9.51	759	10.33	792	11.16	824	12.01	855	12.88	884	13.76
15,000	586	7.56	632	8.34	674	9.14	713	9.94	749	10.77	784	11.60	816	12.45	848	13.32	878	14.21	906	15.11
16,000	619	8.83	663	9.64	703	10.46	741	11.30	776	12.14	810	13.00	841	13.87	872	14.76	901	15.66	929	16.58
17,000	652	10.23	694	11.07	733	11.92	769	12.78	803	13.65	836	14.53	867	15.42	897	16.33	926	17.25	953	18.19
18,000	685	11.76	725	12.63	763	13.51	798	14.39	831	15.29	863	16.20	893	17.11	922	18.04	950	18.98	978	19.93
19,000	719	13.44	757	14.33	793	15.23	827	16.14	860	17.07	890	18.00	920	18.94	949	19.88	976	20.84	1003	21.81
20,000	753	15.26	789	16.18	824	17.10	857	18.04	888	18.99	918	19.94	947	20.90	975	21.87	1002	22.85	1028	23.84
21,000	787	17.23	822	18.17	855	19.12	887	20.08	918	21.05	947	22.03	975	23.02	1002	24.01	1029	25.01	1054	26.02
22,000	821	19.35	855	20.32	887	21.29	918	22.28	947	23.28	976	24.28	1003	25.28	1030	26.30	1056	27.32	1081	28.35
23,000	855	21.63	888	22.62	919	23.62	949	24.63	977	25.65	1005	26.68	1032	27.71	1058	28.75	1083	29.79	1108	30.85
24,000	889	24.07	921	25.08	951	26.11	980	27.14	1008	28.19	1035	29.24	1061	30.29	1086	31.35	1111	32.42	1135	33.49
25,000	924	26.67	954	27.71	983	28.76	1011	29.82	1038	30.89	1065	31.96	1090	33.04	1115	34.12	1139	35.21	1163	36.31
26,000	958	29.45	987	30.51	1016	31.59	1043	32.67	1069	33.76	1095	34.85	1120	35.95	1144	37.06	1168	38.17	1191	39.29
27,000	993	32.40	1021	33.49	1048	34.58	1075	35.69	1101	36.80	1126	37.92	1150	39.04	1174	40.17	1197	41.30	—	—

50A4,A5,A8,A9 060 (60 TONS) (cont)

Airflow (Cfm)	Available External Static Pressure (In. wg)																			
	2.2		2.4		2.6		2.8		3.0		3.2		3.4		3.6		3.8		4.0	
	Rpm	Bhp	Rpm	Bhp	Rpm	Bhp	Rpm	Bhp	Rpm	Bhp	Rpm	Bhp	Rpm	Bhp	Rpm	Bhp	Rpm	Bhp	Rpm	Bhp
12,000	870	12.33	898	13.22	925	14.13	951	15.06	977	16.00	1002	16.96	1026	17.92	1049	18.90	1072	19.89	1094	20.89
14,000	912	14.67	939	15.59	965	16.52	991	17.47	1016	18.44	1040	19.42	1063	20.41	1086	21.41	1109	22.43	1131	23.46
15,000	934	16.02	961	16.96	987	17.90	1012	18.87	1036	19.84	1060	20.83	1083	21.84	1106	22.85	1128	23.88	1150	24.92
16,000	957	17.51	983	18.46	1008	19.42	1033	20.39	1057	21.38	1081	22.39	1104	23.40	1126	24.43	1148	25.47	1170	26.52
17,000	980	19.13	1006	20.10	1031	21.07	1055	22.06	1079	23.06	1102	24.07	1125	25.10	1147	26.14	1169	27.19	1190	28.26
18,000	1004	20.89	1029	21.87	1054	22.86	1078	23.86	1101	24.88	1124	25.91	1147	26.94	1169	28.00	1190	29.06	—	—
19,000	1028	22.80	1053	23.79	1078	24.80	1101	25.81	1124	26.84	1147	27.89	1169	28.94	1190	30.00	—	—	—	—
20,000	1053	24.85	1078	25.86	1102	26.88	1125	27.91	1148	28.96	1170	30.01	1192	31.08	—	—	—	—	—	—
21,000	1079	27.04	1103	28.07	1126	29.11	1149	30.16	1172	31.22	1194	32.30	—	—	—	—	—	—	—	—
22,000	1105	29.39	1129	30.44	1152	31.50	1174	32.57	1196	33.65	—	—	—	—	—	—	—	—	—	—
23,000	1131	31.90	1155	32.97	1177	34.05	1199	35.13	—	—	—	—	—	—	—	—	—	—	—	—
24,000	1158	34.57	1181	35.66	—	—	—	—	—	—	—	—	—	—	—	—	—	—	—	—
25,000	1186	37.41	—	—	—	—	—	—	—	—	—	—	—	—	—	—	—	—	—	—
26,000	—	—	—	—	—	—	—	—	—	—	—	—	—	—	—	—	—	—	—	—
27,000	—	—	—	—	—	—	—	—	—	—	—	—	—	—	—	—	—	—	—	—

LEGEND

Bhp — Brake Horsepower

NOTES:

1. Fan performance is based on wet coils, economizer, roof curb, cabinet losses, and clean 2-in. filters.
2. Conversion — Bhp to watts:

$$\text{Watts} = \frac{\text{Bhp} \times 746}{\text{Motor efficiency}}$$

3. Variable air volume units will operate down to 70 cfm/ton. Performance at 70 cfm/ton is limited to unloaded operation and may be additionally limited by edb and ewb conditions or Humidi-MiZer operation.

Performance data (cont)

FAN PERFORMANCE — STANDARD AND MODULATING POWER EXHAUST

48/50A020-050 (20 to 50 Tons)

Airflow (Cfm)	208 V			230, 460, 575 V		
	ESP	Bhp	Watts	ESP	Bhp	Watts
7,700	0.60	3.69	4140	0.73	3.98	4460
7,900	0.56	3.74	4190	0.69	4.02	4510
8,100	0.51	3.78	4240	0.65	4.07	4560
8,500	0.41	3.83	4290	0.56	4.12	4620
8,900	0.31	3.93	4410	0.47	4.23	4740
9,300	0.20	4.07	4560	0.37	4.37	4900
9,700	0.11	4.17	4670	0.30	4.47	5010
10,100	0.04	4.25	4770	0.23	4.56	5110
10,500	—	—	—	0.17	4.66	5220
10,900	—	—	—	0.12	4.75	5330
11,300	—	—	—	0.07	4.80	5380
11,700	—	—	—	0.04	4.83	5420

LEGEND

Bhp — Brake Horsepower
ESP — External Static Pressure (in. wg)
Watts — Input Watts to Motor

48/50A060 (60 Tons)

Airflow (Cfm)	208 V			230, 460, 575 V		
	ESP	Bhp	Watts	ESP	Bhp	Watts
11,550	0.60	5.54	6210	0.73	5.97	6690
11,850	0.56	5.61	6285	0.69	6.03	6765
12,150	0.51	5.67	6360	0.65	6.10	6840
12,750	0.41	5.74	6435	0.56	6.18	6930
13,350	0.31	5.90	6615	0.47	6.34	7110
13,950	0.20	6.10	6840	0.37	6.56	7350
14,550	0.11	6.25	7005	0.30	6.70	7515
15,150	0.04	6.38	7155	0.23	6.84	7665
15,750	—	—	—	0.17	6.98	7830
16,350	—	—	—	0.12	7.13	7995
16,950	—	—	—	0.07	7.20	8070
17,550	—	—	—	0.04	7.25	8130

LEGEND

Bhp — Brake Horsepower
ESP — External Static Pressure (in. wg)
Watts — Input Watts to Motor

HIGH CAPACITY POWER EXHAUST ACCESSORY

PART NO.	VOLTAGE	CFM PERFORMANCE VS. STATIC PRESSURE				TOTAL AMPS	NOISE (dB)	
		1/4 in.	3/8 in.	1/2 in.	5/8 in.		at 1 foot	at 10 foot
Single Module								
CRPWREXH071A00	230V/3PH	9,817	9,631	9,591	8,964	12.8	88	77
CRPWREXH072A00	460V/3PH					6.4		
CRPWREXH073A00	575V/3PH					4.8		
Two Module								
CRPWREXH074A00	230V/3PH	19,634	19,262	19,182	17,928	25.6	88	77
CRPWREXH075A00	460V/3PH					12.8		
CRPWREXH076A00	575V/3PH					9.6		
Three Module								
CRPWREXH077A00	230V/3PH	29,451	28,893	28,773	26,892	38.4	88	77
CRPWREXH078A00	460V/3PH					19.2		
CRPWREXH079A00	575V/3PH					14.4		

HUMIDI-MIZER® SYSTEM COMPONENT PRESSURE DROPS (in. wg) SIZE 020-035 UNITS

COMPONENT	AIRFLOW (cfm)					
	4,000	6,000	8,000	10,000	12,000	14,000
HUMIDI-MIZER	0.012	0.022	0.035	0.050	0.068	0.089

HUMIDI-MIZER SYSTEM COMPONENT PRESSURE DROPS (in. wg) SIZE 040,050 UNITS

COMPONENT	AIRFLOW (cfm)						
	8,000	10,000	12,000	14,000	16,000	18,000	20,000
HUMIDI-MIZER	0.035	0.050	0.068	0.089	0.112	0.137	0.165

HUMIDI-MIZER SYSTEM COMPONENT PRESSURE DROPS (in. wg) SIZE 060 UNITS

COMPONENT	AIRFLOW (cfm)						
	12,000	14,000	16,000	18,000	20,000	22,000	24,000
HUMIDI-MIZER	0.002	0.004	0.010	0.023	0.044	0.077	0.125

SUPPLY MOTOR LIMITATIONS

PREMIUM-EFFICIENCY MOTORS

Nominal		Maximum		Maximum Amps		Maximum Efficiency
Bhp	BkW	Bhp	BkW	230 v	460 v	
5	3.73	5.9	4.40	15.8	7.9	89.5
10	7.46	10.2	7.61	30.0	—	91.7
		11.8	8.80	—	15.0	91.7
15	11.19	15.3	11.41	46.0	—	93.0
		18.0	13.43		22.0	93.0
20	14.92	22.4	16.71	59.0	—	93.6
		23.4	17.46	—	28.7	93.6
25	18.65	28.9	21.56	73.0	—	93.6
		29.4	21.93	—	36.3	93.6
30	22.38	35.6	26.56	82.6	—	93.6
		34.7	25.89	—	41.7	93.6
40	29.84	42.0	31.33	110.0	55.0	94.5

LEGEND

Bhp — Brake Horsepower
BkW — Brake Kilowatts

NOTES:
1. Extensive motor and electrical testing on the Carrier units has ensured that the full horsepower range of the motor can be utilized with confidence. Using the fan motors up to the horsepower ratings shown in the Motor Limitations table will not result in nuisance tripping or premature motor failures. Unit warranty will not be affected.
2. All motors comply with Energy Policy Act (EPACT) Standards effective October 24, 1997.

AIR QUANTITY LIMITS (48A)

UNIT 48A	MINIMUM HEATING AIRFLOW CFM (Low Heat)	MINIMUM HEATING AIRFLOW CFM (High Heat)	MINIMUM COOLING AIRFLOW (VAV) CFM AT FULL LOAD	MINIMUM COOLING AIRFLOW CFM (CV)	MAXIMUM AIRFLOW CFM
020	5,900	6,100	4,000	6,000	10,000
025	5,900	6,100	5,000	7,500	12,500
027	5,900	6,100	5,400	8,100	13,500
030	5,900	6,100	6,000	9,000	15,000
035	5,900	10,100	7,000	10,500	17,500
040	7,600	10,100	8,000	12,000	20,000
050	7,600	10,100	10,000	13,500	20,000
060	11,000	14,700	12,000	18,000	27,000

LEGEND

CV — Constant Volume
VAV — Variable Air Volume

NOTE: Variable air volume units will operate down to 70 cfm/ton in Cooling mode. Performance at 70 cfm/ton is limited to unloaded operation and may be also limited by edb (entering dry bulb) and ewb (entering wet bulb) conditions.

AIR QUANTITY LIMITS (50A)

UNIT	COOLING		ELECTRIC HEAT	
	Min CFM	Max CFM*	Min CFM	Max CFM
50A2,A4,A6,A8020	6,000	10,000	6,000	15,000
50A3,A5,A7,A9020	4,000	10,000		
50A2,A4,A6,A8025	7,500	12,500		
50A3,A5,A7,A9025	5,000	12,500		
50A2,A4,A6,A8027	8,100	13,500		
50A3,A5,A7,A9027	5,400	13,500		
50A2,A4,A6,A8030	9,000	15,000		
50A3,A5,A7,A9030	6,000	15,000		
50A2,A4,A6,A8035	10,500	17,500		
50A3,A5,A7,A9035	7,000	17,500		
50A2,A4,A6,A8040	12,000	20,000	10,500	20,000
50A3,A5,A7,A9040	8,000	20,000		
50A2,A4,A6,A8050	13,500	20,000		
50A3,A5,A7,A9050	10,000	20,000		
50A2,A4,A6,A8060	18,000	27,000	15,000	27,000
50A3,A5,A7,A9060	12,000	27,000		

*Operation at these levels may be limited by entering evaporator air wet bulb temperatures.

NOTES:
1. Extensive motor and electrical testing on the Carrier units has ensured that the full horsepower range of the motor can be utilized with confidence. Using the fan motors up to the horsepower ratings shown in the Motor Limitations table will not result in nuisance tripping or premature motor failure. Unit warranty will not be affected.
2. All motors comply with Energy Policy Act (EPACT) Standards effective October 24, 1997.

Control components

The 48/50A Series rooftops use the *Comfort*Link control system that has been developed for use in Carrier Commercial equipment. The control system monitors all operating conditions in the rooftop unit, as well as controlling the compressors, economizers, fans, heat, and other devices. It also has the capability of communicating with the Carrier Comfort Network® devices using the CCN protocol and other popular protocols including BACnet, MODBUS, LonWorks, etc.

The system uses a microprocessor and a series of boards, each with inputs and outputs. A local network communications bus (LEN) ties all the boards together into a system and enables the boards to communicate.

For the 48/50A Series, the control consists of the following key components:

Main base board (MBB)

The MBB is the center of the *Comfort*Link control system. It contains the major portion of the operating software and controls the operation of the unit. The MBB continuously monitors inputs and outputs as well as data from the LEN and CCN communications channels. The MBB also controls 11 output relays. A complete list of the MBB and system I/O are contained in the table on page 85. The board is located in the main control box.

Economizer control board (ECB1)

The ECB1 controls the economizer actuator. The ECB1 controls the economizer motor using a digital communications signal that also provides operation and diagnostic data on the economizer motor. The ECB1 also controls the operation of the power exhaust motors and provides up to 6 stages of digitally sequenced power exhaust. Exhaust sequencing can be based on either the economizer motor position or the building pressure. On the A Series unit, the ECB1 board is located in an auxiliary box located at the end of the unit near the economizer motor. The board also contains a second LEN port that can be used with the handheld Navigator™ display.

Supply and building pressure control board (ECB2 or RXB)

The board, which is the same hardware as the ECB1, is used to control the supply fan inverter on the VAV units. It sends a 4 to 20 mA signal to the inverter based on a supply duct pressure sensor connected to the board. The board also accepts a signal from another pressure sensor that monitors building pressure and controls the operation of the optional modulating power exhaust system.

On units equipped with the variable capacity compressor and/or Humidi-MiZer system, this board is called the RXB. The RXB performs the same functions as the ECB2 and has additional inputs and outputs to control the variable capacity compressor as well as the Humidi-MiZer adaptive dehumidification system. The ECB2/RXB is located in the auxiliary control box.

Staged gas heat board (SCB)

When the optional staged gas heat is used, the SCB board will be installed and will control the operation of the gas valves. It also provides additional sensors for monitoring the supply air temperature. This board is located in the gas heat section of the unit.

Integrated gas controller (IGC)

One IGC is provided with each bank of gas heat exchangers. It controls the direct spark ignition system and monitors the rollout switch, limit switches, and induced-draft motor Hall Effect sensor. It is equipped with an LED for diagnostics.

Controls expansion module (CEM)

The optional expansion module is used to provide inputs for demand limiting, remote set point, and other optional inputs. It is located in the main control box.

Compressor protection Cycle-LOC™ board (CS)

This board monitors the status of the compressor by sensing the current flow to the compressors; it then provides digital status signal to the MBB.

Expansion valve control board (EXV)

The optional EXV board controls both the condenser and bypass modulation valves of the humidimizer. This board also receives inputs to sense the evaporative discharge temperature if the unit has the humidimizer option. This board is located in the auxiliary control box.

Scrolling marquee display

This device is the keypad interface used to access the control information, read sensor values, test the unit, and monitor alarm status. The marquee display is a 4-key, 4-character, 16-segment LED (light-emitting diode) display. The display is very easy to operate using 4 buttons and a group of 11 LEDs that indicate the following menu structures:

- Run Status
- Service Test
- Temperatures
- Pressures
- Set Points
- Inputs
- Outputs
- Configuration
- Timeclock
- Operating Modes
- Alarms

Through the display, inputs and outputs can be checked for their value or status. Because the unit is equipped with suction pressure transducers and discharge saturation temperature sensors, it can also display pressures typically obtained from gages. The control includes a full alarm history which can be accessed from the display. Through the display, a built-in test routine can be used at start-up commission and during maintenance inspections to help diagnose operational problems with the unit.

MAIN BASE BOARD (MBB) INPUTS AND OUTPUTS

POINT NAME	POINT DESCRIPTION	I/O POINT NAME	PLUG AND PIN REFERENCE	SIGNAL PIN(S)	PORT STATE
INPUTS					
GASFAN	YAC Indoor Fan relay (fan request from YAC)	DI1	J6, 3-4	4	0 = 24vac, 1= 0vac
FSD	Fire Shutdown switch input	DI2	J6, 5-6	6	0 = 24vac, 1= 0vac
G	Thermostat 'G' input/Remote Occupied	DI3	J7, 1-2	2	0 = 24vac, 1= 0vac
W2	Thermostat 'W2' input	DI4	J7, 3-4	4	0 = 24vac, 1= 0vac
W1	Thermostat 'W1' input	DI5	J7, 5-6	6	0 = 24vac, 1= 0vac
Y2	Thermostat 'Y2' input	DI6	J7, 7-8	8	0 = 24vac, 1= 0vac
Y1	Thermostat 'Y1' input	DI7	J7, 9-10	10	0 = 24vac, 1= 0vac
CSB_A1	Compressor A1 current sensor	DIG1	J9, 10-12	10=5v, 11=Vin, 12=GND	0 = 5vdc, 1 = 0vdc
CSB_A2	Compressor A2 current sensor	DIG2	J9, 7-9	7=5v, 8=Vin, 9=GND	0 = 5vdc, 1 = 0vdc
CSB_B1	Compressor B1 current sensor	DIG3	J9, 4-6	4=5v, 5=Vin, 6 =GND	0 = 5vdc, 1 = 0vdc
CSB_B2	Compressor B2 current sensor	DIG4	J9, 1-3	1=5v, 2=Vin, 3=GND	0 = 5vdc, 1 = 0vdc
DP_A/SCTA	Circuit A saturated condensing pressure/temp	AN1	J8, 21-23	21=5v, 22=Vin, 23=GND (thermistor 21-22)	(0-5vdc, thermistor, ohms)
DP_B/SCTB	Circuit B saturated condensing pressure/temp	AN2	J8, 24-26	24=5v, 25=Vin, 26=GND (thermistor 24-25)	(0-5vdc, thermistor, ohms)
SP_A/SSTA	Circuit A saturated suction pressure/temp	AN3	J8, 15-17	15=5v, 16=Vin, 17=GND (thermistor 15-16)	(0-5vdc, thermistor, ohms)
SP_B/SSTB	Circuit B saturated suction pressure/temp	AN4	J8, 18-20	18=5v, 19=Vin, 20=GND (thermistor 18-20)	(0-5vdc, thermistor, ohms)
RAT	Return air temperature	AN5	J8, 9-10	9	(thermistor, ohms)
SA_TEMP	Supply air temperature	AN6	J8, 11-12	11	(thermistor, ohms)
OAT	Outdoor air temperature	AN7	J8, 13-14	13	(thermistor, ohms)
SPT	Space temperature (T55/56)	AN8	J8, 1-2	1	(thermistor, ohms)
SPTO	Space temperature offset (T56)	AN9	J8, 3-4	3	(thermistor, ohms)
IAQ/IAQMINOV	IAQ analog input	AN10	J8, 5-6	5	(thermistor, ohms)
FLTS	Filter Status	AN11	J8, 7-8	7	(thermistor, ohms)
OUTPUTS					
CMPB2	Compressor B2	RLY 1	J10, 20-21	20 = RLY1A (=RLY2A), 21 = RLY1B	1 = Closes RLY1A/RLY1B
CMPB1	Compressor B1	RLY 2	J10, 22-23	22 = RLY2A (=RLY1A), 23 = RLY2B	1 = Closes RLY2A/RLY2B
CMPA2	Compressor A2	RLY 3	J10, 24-25	24 = RLY3A (=RLY4A), 25 = RLY3B	1 = Closes RLY3A/RLY3B
CMPA1	Compressor A1	RLY 4	J10, 26-27	26 = RLY4A (=RLY3A), 27 = RLY4B	1 = Closes RLY4A/RLY4B
CONDFANB	Condenser fan B	RLY 5	J10, 10-11	10 = RLY5A (=RLY6A), 11 = RLY5B	1 = Closes RLY5A/RLY5B
CONDFANA	Condenser fan A	RLY 6	J10, 12-13	12 = RLY6A (=RLY5A), 13 = RLY6B	1 = Closes RLY6A/RLY6B
HS2	Heat stage 2	RLY7	J10, 14-16	14 = 15 = RLY7A, 16 = RLY7B	1 = Closes RLY7A/RLY7B
HS1	Heat stage 1	RLY 8	J10, 17-19	17 = 18 = RLY8A, 19 = RLY8B	1 = Closes RLY8A/RLY8B
HIR	Heat interlock relay	RLY 9	J10, 4-6	4 = 5 = RLY9A, 6 = RLY9B	1 = Closes RLY9A/RLY9B
SF	Supply fan	RLY 10	J10, 7-9	7 = 8 = RLY10A, 9 = RLY10B	1 = Closes RLY10A/RLY10B
ALRM	Alarm output relay	RLY 11	J10, 1-3	1 = 2 = RLY11A, 3 = RLY11B	1 = Closes RLY11A/RLY11B

LEGEND

IAQ — Indoor-Air Quality
YAC — Gas Heat Unit

CONTROLS EXPANSION MODULE (CEM) INPUTS

POINT NAME	POINT DESCRIPTION	I/O POINT NAME	PLUG AND PIN REFERENCE	SIGNAL PIN(S)	PORT STATE
INPUTS					
SFS	Supply Fan Status switch	DI 1	J7, 1-2	2	0 = 24vac, 1= 0vac
DMD_SW1	Demand Limit - SW1	DI 2	J7, 3-4	4	0 = 24vac, 1= 0vac
DMD_SW2/DHDISCIN	Demand Limit - SW2 / Dehumidification Switch Input	DI 3	J7, 5-6	6	0 = 24vac, 1= 0vac
PRES	Pressurization	DI 4	J7, 7-8	8	0 = 24vac, 1= 0vac
EVAC	Evacuation	DI 5	J7, 9-10	10	0 = 24vac, 1= 0vac
PURG	Purge	DI 6	J7, 11-12	12	0 = 24vac, 1= 0vac
IAQIN	Indoor Air Quality Switch	DI 7	J7, 13-14	14	0 = 24vac, 1= 0vac
		AN7	J6, 1-3	2 (1 = loop power)	(0-20mA input)
DMDLMTMA	4-20mA Demand Limit	AN8	J6, 4-6	5 (4 = loop power)	(0-20mA input)
EDTRESMA	4-20mA Evaporator Discharge SP Reset	AN9	J6, 7-9	8 (7 = loop power)	(0-20mA input)
OAQ	Outside Air CO_2 Sensor	AN10	J6, 10-12	11 (10 = loop power)	(0-20mA input)
SPRESET	SP Reset milliamps	AN10	J6, 10-12	11 (10 = loop power)	(0-20mA input)
CEM_10K1/CEM_4201	CEM AN1 10k temp J5,1-2/CEM AN1 4-20 ma J5,1-2	AN1	J5, 1-2	1	(thermistor, ohms)
CEM_10K2/CEM_4202	CEM AN2 10k temp J5,3-4/CEM AN2 4-20 ma J5,3-4	AN2	J5, 3-4	3	(thermistor, ohms)
CEM_10K3/CEM_4203	CEM AN3 10k temp J5,5-6/CEM AN3 4-20 ma J5,5-6	AN3	J5, 5-6	5	(thermistor, ohms)
CEM_10K4/CEM_4204	CEM AN4 10k temp J5,7-8/CEM AN4 4-20 ma J5,7-8	AN4	J5, 7-8	7	(thermistor, ohms)
		AN5	J5, 9-10	9	(thermistor, ohms)
		AN6	J5, 11-12	11	(thermistor, ohms)

ECONOMIZER CONTROL BOARD (ECB1) INPUTS AND OUTPUTS

POINT NAME	POINT DESCRIPTION	I/O POINT NAME	PLUG AND PIN REFERENCE	SIGNAL PIN(S)	PORT STATE
INPUTS					
RMTIN	Remote occupancy	DI1	J4, 1-2	2	24VAC = 1, 0VAC = 0
ECONENBL, ECOORIDE	Economizer enable	DI2	J4, 3-4	4	24VAC = 1, 0VAC = 0
RARH	Return air relative humidity	AN1	J5, 1-3	1=24VDC, 2=0-20mA in, 3=GND	0-20mA
OARH	Outdoor air relative humidity	AN2	J5, 4-6	4=24VDC, 5=0-20mA in, 6=GND	0-20mA
OUTPUTS					
ECB1_AO1	ECB1, analog output 1	AO1	J9, 1-2	1=0-20mA, 2=GND	0-20mA OUT
ECONOCMD	Economizer actuator (digital control)	PP/MP	J7, 1-3	1=PP/MP Data, 2=24VAC, 3=GND	Belimo PP/MP Protocol
PE_A	Power Exhaust stage A	RLY1	J8, 1-3	1 = 2 = RLY1A, 3 = RLY1B	1 = Closes RLY1A/RLY1B
PE_B	Power Exhaust stage B	RLY 2	J8, 4-6	4 =5 = RLY2A, 6 = RLY2B	1 = Closes RLY2A/RLY2B
PE_C	Power Exhaust stage C	RLY 3	J8, 7-9	7 = 8 = RLY3A, 9 = RLY3B	1 = Closes RLY3A/RLY3B
ECON_PWR	Economizer Power	RLY 6	J8, 16-18	16 = 17 = RLY6A, 18 = RLY6B	1 = Closes RLY6A/RLY6B

RXB CONTROL BOARD (ECB2) INPUTS AND OUTPUTS

POINT NAME	POINT DESCRIPTION	I/O POINT NAME	PLUG AND PIN REFERENCE	SIGNAL PIN(S)	PORT STATE
INPUTS					
		DI1	J4, 1-2	2=Vin, 1=24VAC	24VAC = 1, 0VAC = 0
		DI2	J4, 3-4	4=Vin, 3=24vac	24VAC = 1, 0VAC = 0
		DI3	J4, 5-6	6=Vin, 5=24vac	
		DI4	J4, 7-8	8=Vin, 7=24vac	
		DI5	J4, 9-10	10=Vin, 9=24vac	
		DI6	J4, 11-12	12=Vin, 11=24vac	
BP	Building static pressure	AN1	J5, 1-3	1=24VDC, 2=0-20mA in, 3=GND	0-20mA
SP	Supply Duct static pressure	AN2	J5, 4-6	4=24VDC, 5=0-20mA in, 6=GND	0-20mA
CCT	Air Temp Lvg Evap Coil	AN3	J6, 1-2	1=Vin, 2=GND	(thermistor, ohms)
DSDT	DS Discharge Temperature	AN4	J6, 3-4	3=Vin, 4=GND	(thermistor, ohms)
		AN5	J6, 5-6	5=Vin, 6=GND	(thermistor, ohms)
		AN6	J6, 7-8	7=Vin, 8=GND	(thermistor, ohms)
OUTPUTS					
SFAN_VFD	Supply Fan Inverter speed	AO1	J9, 1-2	1=0-20mA, 2=GND	0-20mA OUT
CMPDSCAP	Digital Scroll Solenoid	PP/MP	J7, 1-3	1=PP/MP Data, 2=24VAC, 3=GND	Belimo PP/MP Protocol
		RLY1	J8, 1-3	1 = 2 = RLY1A, 3 = RLY1B	1 = Closes RLY1A / RLY1B
		RLY2	J8, 4-6	4 = 5 = RLY2A, 6 = RLY2B	1 = Closes RLY2A / RLY2B
HUM3WVAL	Humidimizer 3 Way Valve	RLY3	J8, 7-9	7 = 8 = RLY3A, 9 = RLY3B	1 = Closes RLY3A / RLY3B
		RLY4	J8, 10-12	10 = 11 = RLY4A, 12 = RLY4B	1 = Closes RLY4A / RLY4B
		RLY5	J8, 13-15	13 = 14 = RLY5A, 15 = RLY5B	1 = Closes RLY5A / RLY5B
MLV	Minimum load valve	RLY 6	J8, 16-18	16 = 17 = RLY6A, 18 = RLY6B	1 = Closes RLY6A / RLY6B

NOTE: RXB is required for Digital Scroll or Humidi-MiZer option.

STAGED GAS HEAT BOARD (SCB) INPUTS AND OUTPUTS

POINT NAME	POINT DESCRIPTION	I/O POINT NAME	PLUG AND PIN REFERENCE	SIGNAL PIN(S)	PORT STATE
INPUTS					
		AN1	J5, 1-3	1=5v, 2=Vin, 3=GND (thermistor 1-2)	(0-5VDC, thermistor, ohms)
		AN2	J5, 4-6	4=5v, 5=Vin, 6=GND (thermistor 4-5)	(0-5VDC, thermistor, ohms)
LAT1SGAS	Leaving air temperature 1	AN3	J5, 7-9	7=5v, 8=Vin, 9=GND (thermistor 7-8)	(0-5VDC, thermistor, ohms)
LAT2SGAS	Leaving air temperature 2	AN4	J5, 10-12	10=5v, 11=Vin, 12=GND (thermistor 10-11)	(0-5VDC, thermistor, ohms)
LAT3SGAS	Leaving air temperature 3	AN5	J5, 13-15	13=5v, 14=Vin, 15=GND (thermistor 13-14)	(0-5VDC, thermistor, ohms)
		AN6	J6, 1-3	1=5v, 2=Vin, 3=GND (thermistor 1-2)	(0-5VDC, thermistor, ohms)
		AN7	J6, 4-6	4=5v, 5=Vin, 6=GND (thermistor 4-5)	(0-5VDC, thermistor, ohms)
		AN8	J6, 7-9	7=5v, 8=Vin, 9=GND (thermistor 7-8)	(0-5VDC, thermistor, ohms)
		AN9	J7, 1-2	1	(thermistor, ohms)
		AN10	J7, 3-4	3	(thermistor, ohms)
OUTPUTS					
		AO1	J8, 1-2	1=0-20mA, 2=GND	0-20mA OUT
		AO2	J8, 3-4	3=0-20mA, 4=GND	0-20mA OUT
HS3	Heat Stage 3	RLY1	J9, 1-3	1 = 2 = RLY1A, 3 = RLY1B	1 = Closes RLY1A/RLY1B
HS4	Heat Stage 4	RLY 2	J9, 4-6	4 =5 = RLY2A, 6 = RLY2B	1 = Closes RLY2A/RLY2B
HS5	Heat Stage 5	RLY 3	J9, 7-9	7 = 8 = RLY3A, 9 = RLY3B	1 = Closes RLY3A/RLY3B
HS6	Heat Stage 6	RLY 4	J9, 10-12	10 = 11 = RLY4A, 12 = RLY4B	1 = Closes RLY4A/RLY4B
		RLY 5	J9, 13-15	13 = 14 = RLY5A, 15 = RLY5B	1 = Closes RLY5A/RLY5B

HUMIDI-MIZER CONTROL BOARD (EXV) INPUTS AND OUTPUTS

POINT NAME	POINT DESCRIPTION	I/O POINT NAME	PLUG AND PIN REFERENCE	SIGNAL PIN(S)	PORT STATE
INPUTS					
CCT	Air Temp Lvg Evap Coil	AN1	J5, 5-6	5=Vin, 6=GND	(Thermistor, ohms)
		AN2	J5, 7-8	7=Vin,8 =GND	(Thermistor, ohms)
		AN3	J5, 9-10	9=Vin, 10=GND	(Thermistor, ohms)
		AN4	J5, 11-12	11=Vin, 12=GND	(Thermistor, ohms)
		AN5	J5, 1-2	1=Vin, 2=GND	0-20mA INPUT
		AN6	J5, 3-4	3=Vin, 4=GND	0-20mA INPUT
OUTPUTS					
COND_EXV	Condenser EXV Position	OUTA			
		Coil1A	J6,1	1	HI Z when P5.7 and P5.6 = 0 +12 vdc when P5.7 = 1 and P5.6 = 0 0 vdc when P5.7 = 0 and P5.6 = 1 PROHIBITED when P5.7 = 1 and P5.6 = 1
		Coil2A	J6,2	2	HI Z when P5.5 and P5.4 = 0 +12 vdc when P5.5 = 1 and P5.4 = 0 0 vdc when P5.5 = 0 and P5.4 = 1 PROHIBITED when P5.5 = 1 and P5.4 = 1
		12VDC	J6, 3	3	Power Output
		Coil3A	J6,4	4	HI Z when P5.3 and P5.2 = 0 +12 vdc when P5.3 = 1 and P5.2 = 0 0 vdc when P5.3 = 0 and P5.2 = 1 PROHIBITED when P5.3 = 1 and P5.2 = 1
		Coil4A	J6,5	5	HI Z when P5.1 and P5.0 = 0 +12 vdc when P5.1 = 1 and P5.0 = 0 0 vdc when P5.1 = 0 and P5.0 = 1 PROHIBITED when P5.1 = 1 and P5.0 = 1
COND_EXV	Bypass EXV Position	OUTB			
		Coil1B	J7,1	1	HI Z when P8.7 and P8.6 = 0 +12 vdc when P8.7 = 1 and P8.6 = 0 0 vdc when P8.7 = 0 and P8.6 = 1 PROHIBITED when P8.7 = 1 and P8.6 = 1
		Coil2B	J7,2	2	HI Z when P8.5 and P8.4 = 0 +12 vdc when P8.5 = 1 and P8.4 = 0 PROHIBITED when P8.5 = 1 and P8.4 = 1
		12VDC	J7,3	3	Power Output
		Coil3B	J7,4	4	HI Z when P8.3 and P8.2 = 0 +12 vdc when P8.3 = 1 and P8.2 = 0 0 vdc when P8.3 = 0 and P8.2 = 1 PROHIBITED when P8.3 = 1 and P8.2 = 1
		Coil4B	J7,5	5	HI Z when P8.1 and P8.0 = 0 +12 vdc when P8.1 = 1 and P8.0 = 0 0 vdc when P8.1 = 0 and P8.0 = 1 PROHIBITED when P8.1 = 1 and P8.0 = 1

INPUT/OUTPUT CHANNEL DESIGNATIONS — FIELD CONNECTION TERMINAL STRIPS

TERMINAL BOARD	TERMINAL NO.	DESCRIPTION	TYPE
TB-1 - POWER CONNECTION OR DISCONNECT (in Main Control Box)			
TB1	11	L1 power supply	208-230/460/575/380/-3-60
	12	L2 power supply	208-230/460/575/380/-3-60
	13	L3 power supply	208-230/460/575/380/-3-60
TB-2 - GROUND (in Main Control Box)			
TB2	1	Neutral Power	
TB-3 - CCN COMMUNICATIONS (HY84HA096) (In Main Control Box)			
TB3	1	LEN +	5 VDC, logic
	2	LEN C	5 VDC, logic
	3	LEN –	5 VDC, logic
	4	24 VAC	24 VAC
	5	CCN +	5 VDC, logic
	6	CCN C	5 VDC, logic
	7	CCN –	5 VDC, logic
	8	Grd	ground
TB-4 - THEROMSTAT CONNECTIONS (HY84HA090) (in Main Control Box)			
TB4	1	Thermostat R	24 VAC Power
	2	Thermostat Y1	24 VAC Input
	3	Thermostat Y2	24 VAC Input
	4	Thermostat W1	24 VAC Input
	5	Thermostat W2	24 VAC Input
	6	Thermostat G	24 VAC Input
	7	Thermostat C	24 VAC Common
	8	Thermostat X (Alarm Contact)	24 VAC Output
TB-5 - FIELD CONNECTIONS (HY84HA101) (in Main Control Box)			
TB5	1	VAV Heater Interlock Relay, Ground	Dry Contact, Max 1 Amp
	2	VAV Heater Interlock Relay, 24 VAC	Dry Contact, Max 1 Amp
	3	T55/T56 10 K Thermistor	Thermistor Input
	4	T55/T56 10 K Thermistor	Thermistor Input
	5	T56 Set Point Adjustment (100,000 ohm)	Thermistor Input
	6	Indoor Air IAQ Remote Sensor/Remote Pot/Remote 4-20 mA	4-20 mA, ext. powered w/res or 0-5 VDC, +
	7	Indoor Air IAQ Remote Sensor/Remote Pot/Remote 4-20 mA	4-20 mA, ext. powered w/res or 0-5 VDC, –
	8	Smoke Detector Remote Alarm	external contacts
	9	Smoke Detector Remote Alarm	external contacts
	10	Fire Shutdown	24 VAC Power
	11	Fire Shutdown	24 VAC Input
	12	Fire Control*	24 VAC Power
	13	Fire Pressurization*	24 VAC Input
	14	Fire Evacuation*	24 VAC Input
	15	Fire Smoke Purge*	24 VAC Input
	16	Not Used	—
TB-6 - FIELD CONNECTIONS (HY84HA101) (In Main Control Box)			
TB6	1	Remote Occupied/Economizer Enable 24 VAC	24 VAC Power
	2	Remote Economizer Contact	24 VAC Input
	3	Remote Occupied Contact	24 VAC Input
	4	Demand Limit Contacts Common*	24 VAC Power
	5	Demand Limit SW1*	24 VAC Input
	6	Demand Limit SW2 / Dehumidification Switch*	24 VAC Input
	7	Demand Limit 4-20 mA*	externally powered 4-20 mA
	8	Demand Limit 4-20 mA*	externally powered 4-20 mA
	9	Remote Supply Air Setpoint 4-20 mA*	externally powered 4-20 mA
	10	Remote Supply Air Setpoint 4-20 mA*	externally powered 4-20 mA
	11	Outdoor Air IAQ 4-20 mA*	externally powered 4-20 mA
	12	Outdoor Air IAQ 4-20 mA*	externally powered 4-20 mA
	13	IAQ Remote Switch*	24 VAC Power
	14	IAQ Remote Switch*	24 VAC Input
	15	Supply Fan Status Switch*	24 VAC Power
	16	Supply Fan Status Switch*	24 VAC Input
TB-7 - ELECTRIC HEAT POWER BLOCK (in Electric Heat section)			
TB7	1	L1 Power Supply	208-230/460/575/380/-3-60, 400-3-50
	2	L2 Power Supply	208-230/460/575/380/-3-60, 400-3-50
	3	L3 Power Supply	208-230/460/575/380/-3-60, 400-3-50

* Requires optional Controls Expansion Module (CEM).

Controls (cont)

Cooling control options

When mechanical cooling is required, the A Series *Comfort*Link controls have the capability to control the staging of the compressors in several different ways:

- 3 compressor stages on 020-027 units.
- 4 compressor stages on 030-060 units.
- Optional variable capacity scroll compressor.
- Optional minimum load hot gas bypass valve (MLV)

The control also integrates the use of an economizer with the use of mechanical cooling to allow for the greatest use of free cooling. When both mechanical cooling and the economizer are being used, the control will use the economizer to provide better temperature control and limit the cycling of the compressors. The control also ensures safety limits are not exceeded and the compressors are reliably operated.

The A Series *Comfort*Link controls offer two basic control approaches to mechanical cooling:

- constant volume/staged air volume
- VAV

Both approaches utilize multiple stages of cooling. In addition, the A Series *Comfort*Link controls offer the ability to run multiple stages of cooling in constant volume/staged air volume operation by controlling the unit to either a low or high cool supply air set point based on either a space temperature sensor or 2-stage thermostat input.

CONTROL TYPE			COOLING CONTROL METHOD
Unit	Application	Demand Source	
A3,A5,A7,A9	VAV	RAT or SPT	VAV Supply Air Temperature (SAT) Control
A2,A4,A6,A8	CV/SAV	SPT or T-STAT	Multiple Adaptive Demand

Control type

The control type determines the selection of the type of cooling control as well as the technique for selecting a cooling mode. The control types are:

VAV-RAT and VAV-SPT

Both of these configurations refer to standard VAV operation. If the control is occupied, the supply fan is run continuously and return-air temperature will be used in the determination of the cooling mode. VAV-SPT differs from VAV-RAT only in that during the unoccupied period, space temperature will be used instead of return-air temperature to start the fan for ten minutes before the return-air temperature is allowed to call out any mode.

CV/SAV TSTAT-Multiple Stage

This configuration will force the control to monitor the thermostat inputs (Y1,Y2) to make a determination of mode. Unlike traditional 2-stage thermostat control, the unit is allowed to use multiple stages of cooling control and perform VAV-style capacity control.

CV/SAV SPT-Multiple Stage

This configuration will force the control to monitor a space temperature sensor to make a determination of mode. The unit is allowed to use multiple stages of cooling control and perform VAV-style capacity control.

Cooling control method

Two different cooling control methods are used to step through the available stages of capacity. Depending on the unit size, cooling control method, and presence of an MLV, this may range from 2 up to 5 stages of capacity control. These methods are:

VAV Supply Air Temperature (SAT) Control

The capacity of the economizer and compressors are controlled based on the evaporator air discharge temperature and supply air temperature set point. This control method uses an adaptive PID (proportional, integral, derivative) algorithm (referred to as SumZ) to calculate the estimated change in supply-air temperature before engaging or disengaging the next stage of cooling. The algorithm compensates for varying conditions, including changing flow rates across the evaporator coil, to provide better overall control of compressor staging.

Multiple Adaptive Demand

This control method will base the capacity of the economizer and compressors on the evaporator air discharge temperature and one of two supply air temperature set points. The control will be able to call out a LOW COOL or a HIGH COOL mode and maintain a low or high cool supply air set point. The unit will either use the input from a conventional thermostat to turn the Y1, Y2 signals into a high and low demand signal, or with a space temperature sensor use a differential from set point to determine the mode. Once the mode has been established, the control uses the same algorithm as with VAV control.

Integrated economizer

For each of the above modes of operation, all mechanical cooling will first be delayed while the unit attempts to use the economizer for free cooling. Once the economizer is at full capacity, the control will then supplement the free cooling with as much mechanical cooling as required. To prevent any rapid changes in cooling, the control will also use the economizer to trim the cooling supplied.

Heating control options

When heating is required, the A Series units can be provided with 2-stage electric heat, 2-stage gas heat, or multiple-stage gas heat. Depending on unit size and heating capacity, the multiple-stage option may have between 5 and 11 stages of heating capacity control. The A Series *Comfort*Link controls have the capability to control the heating capacity based on input from a 2-stage mechanical thermostat, a space temperature sensor, or on VAV units by the return air temperature sensor. With CV/SAV units the heating mode (off, low or high) will be enabled based on W1 and W2 thermostat inputs, or when using a space temperature sensor the differential from heating set point will be used. Heating with VAV units will be enabled based on the return-air temperature or the space temperature, but once enabled, control will be based on the return-air temperature. Variable air volume terminals will be commanded open to the heating cfm through linkage or the heat interlock relay.

The A Series *Comfort*Link controls will use one of the following control methods:

Two-stage control

The unit will operate in LOW HEAT or HIGH HEAT mode as determined by the demand inputs. In the LOW HEAT mode if the temperature sensed by the evaporator discharge temperature sensor is below 50°F, the unit will automatically go into a HIGH HEAT mode.

Multiple-stage control

When the unit is in a LOW HEAT mode, the algorithm calculates the desired heat capacity based on set point and supply-air temperature. The staged gas control logic will stage the heating capacity to match the calculated demand. When the unit is in a HIGH HEAT mode, all stages of heat will be activated. Staged gas heat can also be used in a TEMPERING mode.

Tempering control

When a unit is equipped with multiple staged gas heat, tempering allows the unit to provide a neutral supply air temperature in winter climates. This mode is enabled during a VENTILATION, LOW COOL, or HIGH COOL mode when the economizer dampers are at their minimum ventilation position and the mixed-air temperature is below the supply air set point. Tempering can also be used during a preoccupancy purge to prevent low temperature air from being delivered to the space.

Economizer and IAQ options

The controls have been designed to support the requirements of indoor air quality control through the use of outside air. Units can be equipped either with an adjustable, self-closing outdoor air damper or with a fully modulating economizer with ultra-low leak dampers. The economizer can be configured for a full modulation mode or 3-position mode of operation. The control includes logic for a minimum ventilation position and different set points for occupied and unoccupied minimum position set points. This control also has logic built in to calibrate the economizer position to the actual percentage of outside air introduced. During periods when the compressors are not being used, the control will use the RAT, SAT and OAT to calibrate the economizer. This will allow for setting the outside air actual percentage, not just the percent damper position.

The use of the economizer will depend on the mode of change selected. This control integrates the changeover directly into the control. Five types of changeover are available:

- Outdoor air dry bulb
- Differential dry bulb
- Outdoor air enthalpy
- Differential enthalpy
- Outdoor air dew point

The units are provided with an outdoor air and return air temperature sensor so the first two changeover methods are available as standard. To use the enthalpy changeover options, the control supports the addition of highly reliable electronic humidity or enthalpy sensors. The humidity sensor input is then used with the dry bulb sensors to calculate the enthalpy. For outdoor enthalpy changeover the control also has the ASHRAE 90.1 A, B, C, D economizer changeover curves built into the software.

Building pressure control — When operating with outside air economizers, large amounts of air can be introduced into the building and a means must be provided for building pressure relief. The 48/50A Series control supports the following three types of building pressure control:

- Relief Dampers — Can be used on low return duct static applications
- Non-Modulating Two-Stage Power Exhaust — The unit can be equipped with multiple power exhaust fans—4 on sizes 020-050 and 6 on size 060. The software controls the power exhaust stages based on the economizer position (percent open).
- Modulating Power Exhaust — Both the VAV and CV/SAV units can be equipped with power exhaust fans that are controlled by a building pressure sensor that is connected to the *Comfort*Link controller. The fans are in groups which allow for 4 stages on sizes 020-050 and 6 stages on size 060.
- High Capacity Power Exhaust (field-installed) — Both the VAV and CV/SAV units can be equipped with the field-installed high capacity power exhaust. These motors are modulated via VFDs which are controlled by a building pressure sensor that is connected to the *Comfort*Link controller. The VFDs provide full modulation and precise building pressure control.

The units are capable of using either 2-in. or optional 4-in. pleated filters and can have an optional filter pressure drop switch to warn of dirty filter conditions.

The indoor air quality (IAQ) function provides a demand-based control for ventilation air quantity, by providing a modulating outside air damper position that is proportional to the space CO_2 level. The ventilation damper position is varied between a minimum ventilation level (based on internal sources of contaminants and CO_2 levels other than the effect of people) and the maximum design ventilation level (determined at maximum populated status in the building). During a less-than-fully populated space period, the CO_2 level will be lower than that at full-load design condition and will require less ventilation air. Reduced quantities of ventilation air will result in reduced operating costs. Space CO_2 levels are monitored and compared to user-configured set points. Accessory CO_2 sensor for space (or return duct mounting) is required. The IAQ routine can be enhanced by also installing a sensor for outdoor air (CEM required).

During the occupied period, in the absence of a demand for cooling using outside air, if CO_2 levels are below the set point for the minimum ventilation level, the outside-air damper will open to the minimum ventilation level damper position set point. The minimum damper position will be maintained as long as the CO_2 level remains below the set point.

When the space CO_2 level exceeds set point for the minimum ventilation level condition, the *Comfort*Link controls will begin to open the outside air damper position to admit more ventilation air and remove the additional contaminants. As the space CO_2 level approaches the set point for maximum design ventilation level condition, the outside air damper position will reach the maximum ventilation level damper position set point limit. Damper position will be modulated in a directly proportional relationship between

these two CO_2 set point limits and their corresponding damper position limits.

In most applications a fixed reference value can be set for the outdoor air quality level, but the control also supports (with optional CEM) the addition of an outdoor air quality sensor that will be compared to the indoor or return IAQ sensor. If an OAQ (outdoor air quality) sensor is connected, the demand set point levels will be adjusted automatically as the outdoor CO_2 levels vary. Also, if the outdoor CO_2 level exceeds a user-configured maximum limit value, then outside air damper position will be limited to the minimum ventilation damper set point value. The control can also receive these signals through the CCN system.

The IAQ and OAQ measurement levels are displayed by the *Comfort*Link scrolling marquee in parts per million (ppm).

Fire and smoke controls interface

The unit can be equipped with an optional return air smoke detector. The smoke detector is wired to stop the unit and send a message to a remote alarm system if a fault condition is detected. If the controls expansion module (CEM) is added, the control will support smoke control modes including evacuation, smoke purge, and pressurization.

Demand limiting

The control supports demand limiting using one or two fixed capacity limits initiated by discrete input switches or a variable capacity limit function based on an analog input signal. On CCN systems this can be done through the network, or for non-CCN network jobs this can be done by adding the controls expansion module.

Diagnostics

The *Comfort*Link controls have fully integrated all controls and sensors into a common control system. The control monitors these inputs as well as many of the routines to provide advanced diagnostics and prognostics. These include adaptive logic to allow the unit to continue to operate in a reduced output mode and automatic resets where applicable. The last 10 alarms and alerts are stored in memory and can be accessed through the display. The alarms can also be monitored through the Carrier Comfort Network® connection or building automation system. The unit also supports the use of the hand-held Navigator™ display which can be plugged in at the main control box and auxiliary control box at the opposite end of the unit.

Some of the diagnostics that are included are:

- Monitoring of all sensors
- Suction pressure transducers to provide compressor protection and coil freeze protection
- Monitoring of the economizer actuator via digital communication
- Monitoring of compressor status using compressor protection boards
- Adaptive logic for low supply-air temperatures
- Compressor lockout at low ambient conditions
- Storage of compressor run hours and starts
- Low refrigerant charge protection
- Compressor reverse rotation protection

Control interface

The *Comfort*Link controller can interface with the i-Vu® Open Control System, a BACnet building automation system, or Carrier Comfort Network® devices. This will allow for the use of all system control programs. These include:

- Network Service Tool
- System Pilot™ device
- Touch Pilot™ device
- i-Vu® Open Control System software
- ComfortView™ software
- CCN Web software
- ComfortID™ system

Contact Carrier Controls Marketing for more information.

The control can also provide interface with other energy management systems with the addition of either the BACnet communication option, the MODBUS Carrier translator, or the LonWorks Carrier translator.

Several contact connection points have been provided in the main control box for interface to external controls and for easy third party control. These are summarized in the Interface Connections table on page 93. External controls use the following interface points:

- Start/Stop (On/Off) — Start/Stop is accomplished with a contact closure between terminals 1 and 3 on TB6.
- Remote Economizer Enable — Enabling and disabling of the economizer can be done by connecting a contact closure to terminals 1 and 2 on TB6. The economizer can be configured for a switch closure changeover for 3-position operation.
- VAV Heating Interlock — Interface with non-linkage terminals can be done through TB5 terminal 1 and 2.
- Remote IAQ Inputs — External IAQ demand inputs can be connected through terminals 6 and 7 on TB5.
- Smoke Detectors Alarm Output — Remote detector alarm outputs can be connected through terminals 8 and 9 on TB5.
- Fire Shutdown — A remote fire shutdown signal can be connected to 10 and 11 on TB5. The software can be configured to shut the unit down on an open or closed signal.
- Fire Pressurization — For a remote control of pressurization a contact closer can be connected to terminals 12 and 13 on TB5. In this mode the economizer damper will be fully opened and the supply fan turned on to pressurize the space.
- Fire Evacuation — For this mode a remote contact closure can be connected to terminal 12 and 14 on TB5. For remote evacuation of a space the outside-air dampers will be opened and the power exhaust fans turned on to evacuate the space of smoke.
- Fire Purge — For this mode external contacts can be connected to terminals 12 and 15 on TB5. In this mode the supply fan and return fans will be turned on with the economizer at a full open position.
- Demand Limiting — For demand limiting the controls expansion module (CEM) must be used. Connections are provided on TB6 for switch input demand limiting and for 4 to 20 mA demand limit signals.

- Dehumidification — A discrete input is available on TB6 to initiate the Dehumidification mode. This input is shared with one of the demand limiting inputs and requires the controls expansion module.
- Remote Supply Air Set Point — A remote supply air temperature set point can be supported when the controls expansion module is used. It can be connected to terminals 9 and 10 on TB6.
- Outdoor Air IAQ Signal — If an external outdoor air signal is being used then it can be connected to terminals 11 and 12 on TB6.
- IAQ Switch Input — If an external control will be controlling IAQ then it can be connected as a contact closure through terminals 13 and 14 on TB6.

Carrier can also support electronic interface to other systems using the following;

- MODBUS Carrier translator (read/write, provides CCN to MODBUS remote terminal unit [RTU] protocol conversion)
- LonWorks Carrier translator (read/write, provides CCN to LON FT-10A ANSI/EIA-709.1 protocol conversion)

Constant volume/staged volume applications

The 48/50A2,A4,A6,A8 units are designed to operate in CV/SAV™ applications. The units are shipped as operable, stand-alone units using either a standard (mechanical or electronic) 2-stage heat or 2-stage cool thermostat, or with an electronic room temperature sensor and a timeclock to establish unit start and stop times.

With a standard thermostat (programmable is optional), heating and cooling operation is set by space temperature.

With a space sensor and field-supplied timeclock, the machine will operate at default values unless they are changed using appropriate input devices. The space sensor monitors space temperature and may be equipped with a timed override feature, which allows unit operation during unoccupied periods. The space sensors may be used in multiples of 4 or 9 to achieve space temperature averaging. The use of a space sensor also allows the unit to be turned on and off from a remote signal or it can be programmed to use the time of day scheduling that is built into the control.

Supply air can be supplied at a constant volume, or at staged air volumes corresponding to two configurable speeds.

Features with thermostat control of unit

- Two-stage heating (if installed)
- Multiple stage gas heating if unit is equipped with the staged gas heat option
- Two-stage demand with fully proportional economizers and integrated compressor capacity
- Adaptive multiple stage cooling which can provide up to 5 stages of capacity
- Control of unit using Y1, Y2, W1, W2, and G thermostat or T55 or T56 space sensors
- Outdoor-air temperature/supply-air temperature monitoring with logic to lock the compressors out at low ambient temperatures down to 0°F
- Control of modulating economizer for free cooling
- Control to maximize the use of outside air cooling to reduce part load operating costs
- Control of the power exhaust fans based on configurable damper positions or directly from the optional building pressure sensor
- Compressor time guard override (power up and minimum on and off timers)
- Support of IAQ sensor

INTERFACE CONNECTIONS

TB-3 — CCN COMMUNICATIONS (HY84HA096)		
TB3	1	LEN +
	2	LEN C
	3	LEN –
	4	24 VAC
	5	CCN +
	6	CCN c
	7	CCN –
	8	Grd
TB-4 — THERMOSTAT CONNECTIONS (HY84HA090)		
TB4	1	Thermostat R
	2	Thermostat Y1
	3	Thermostat Y2
	4	Thermostat W1
	5	Thermostat W2
	6	Thermostat G
	7	Thermostat C
	8	Thermostat X
TB-5 — FIELD CONNECTIONS (HY84HA101)		
TB5	1	VAV Heater Interlock Relay, Ground
	2	VAV Heater Interlock Relay, 24 VAC
	3	T55/T56 10K Thermistor
	4	T55/T56 10K Thermistor
	5	T56 Set Point Adjustment (100,000 ohm)
	6	Indoor Air IAQ Remote Sensor/Remote Pot/Remote 4-20 mA
	7	Indoor Air IAQ Remote Sensor/Remote Pot/Remote 4-20 mA
	8	Smoke Detector Remote Alarm
	9	Smoke Detector Remote Alarm
	10	Fire Shutdown
	11	Fire Shutdown
	12	Fire Control Common*
	13	Fire Pressurization*
	14	Fire Evacuation*
	15	Fire Smoke Purge*
	16	Not Used
TB-6 — FIELD CONNECTIONS (HY84HA101)		
TB6	1	Remote Occupied/Economizer Enable 24 VAC
	2	Remote Occupied Contact
	3	Remote Economizer Contact
	4	Demand Limit Contacts Common*
	5	Demand Limit Switch 1*
	6	Demand Limit Switch 2/Dehumidify Switch*
	7	Demand Limit 4-20 mA*
	8	Demand Limit 4-20 mA*
	9	Remote Supply Air Set Point 4-20 mA*
	10	Remote Supply Air Set Point 4-20 mA*
	11	Outdoor Air IAQ 4-20 mA*
	12	Outdoor Air IAQ 4-20 mA*
	13	IAQ Remote Switch Common*
	14	IAQ Remote Switch*
	15	Supply Fan Status Switch*
	16	Supply Fan Status Switch*

* Optional controls expansion module (CEM) is required.

Controls (cont)

Features with sensor control of unit

There are 2 sensor options available:

- T55 sensor will monitor room temperature and provide unoccupied override capability (1 to 4 hours).
- T56 sensor will monitor room temperature, provide unoccupied override capability (1 to 4 hours), and provide a temperature offset of 5°F maximum.

Standard features are:

- Support of remote occupied/unoccupied input to start and stop the unit
- Two-stage economizer demand with fully proportional economizers and integrated compressor capacity
- Variable capacity control with variable capacity compressor option
- Cooling capacity with adaptive control, with up to 5 stages of mechanical refrigeration capacity
- Occupied or unoccupied set point
- Enable heating (if installed) or cooling during unoccupied periods as required to maintain space temperature within the unoccupied set points
- Adjustment of space temperature set points of ± 5°F when using a T56 sensor
- Support of IAQ sensor
- 365-day timeclock with backup (supports minute, hour, and day of week, date, month, and year access). The timeclock includes the following features:
  - — Daylight savings time function
  - — Occupancy control with 8 periods for unit operation
  - — Holiday table containing up to 18 holiday schedules
  - — Ability to initiate timed override from T55 or T56 sensors (for a timed period of 1 to 4 hours)
  - — Temperature-compensated start to calculate early start times before occupancy
  - — For units connected into a CCN network, the timeclock can be integrated into the overall building energy management system and be updated remotely
- For units connected to the CCN network the user can also display all the unit information including I/O values Maintenance, Configuration, Service, and Set Point data tables

Variable air volume (VAV) applications

The 48/50A3,A5,A7,A9 units are designed to operate in VAV applications. As standard they include a supply fan inverter (VFD) to control the supply fan speed and duct pressure. They are designed to control the leaving-air temperature in cooling to a configurable set point. The changes in mode of operation from Heating to Vent to Cooling mode can be controlled either from the return air temperature sensor or from an accessory space temperature sensor. Some of the features for VAV units in a stand-alone application are:

- The units are shipped as operable, stand-alone units with the addition of a field-supplied timeclock to establish unit start and stop times or they can use *Comfort*Link time of day scheduling routine
- Provides cooling and heating control (if equipped with heat) in both occupied and unoccupied modes
- Supports an optional space temperature sensor for mode control and supply air temperature reset
- If space sensor is equipped with an override feature, the sensor will allow operation during the unoccupied period for a fixed length of time
- Base unit control supports a heat interlock relay (field supplied) to signal the VAV terminal devices to fully open during heating operation
- Control board diagnostics
- Control of modulating economizer for free cooling
- Control to maximize the use of outside air cooling to reduce part load operating costs
- Support of remote occupied/unoccupied input to start
- Controls the operation of the supply fan inverter to maintain a configurable supply duct static pressure set point. Inverter is configured and controlled directly by *Comfort*Link controls
- Support of IAQ sensor
- Support a field test for field check out
- Support linkage to ComfortID™ systems
- Cooling capacity control of up to 5 stages plus economizer
- Control of heat to maintain return-air temperature
- Control of heat interlock relay
- Compressor time delays to prevent rapid cycling of compressors
- Automatic lead-lag control of compressors to reduce the number of compressor cycles
- With the addition of a remote start/stop switch, heating or cooling is enabled during unoccupied periods as required to maintain space temperature to within unoccupied set points
- With the addition of the controls expansion board, the *Comfort*Link controls will also support demand limiting and remote set point control

When the unit is connected to a CCN (Carrier Comfort Network®) system, additional features can be used:

- Interface of the unit clock with the CCN network clock and allow for remote configuration of the schedules
- CCN demand limit participation
- Interface with ComfortID™ control systems through linkage

Sequence of operation

Cooling, constant volume (CV)/staged air volume (SAV™) units

On power up, the initialization software will determine the unit configuration and also initialize any controls loops and input/output devices. All alarms and configurations are saved in memory and maintained during power outages. All alarms will be maintained in memory and must be cleared through the display.

On SAV units equipped with a supply fan VFD, the fan is controlled at discrete speeds based on the operation mode of the unit.

Fan will operate in Low speed when:

- Cooling capacity is less than 50%
- In ventilation mode
- Heating is less than 75% capacity

Fan will operate in High speed when:

- Cooling capacity is greater than 50%
- Heating capacity is greater than 75% capacity

Constant volume/staged air volume conventional thermostat control

If the unit is equipped with a conventional thermostat with Y1, Y2, W1, W2, and G connections, then the control will perform the following sequence.

When G is closed the indoor fan will turn on. G must be closed for heating or cooling to occur.

If Y1 is closed, then the control will first check the ability to use the economizer. If the economizer can be used, the control will modulate the damper open to maintain the low load economizer leaving air temperature set point.

If Y2 closes, then the control will lower the leaving air temperature set point to the configured set point. If the economizer cannot satisfy the load, then compressors will be sequenced on to maintain either the low or high load temperature set points. If the economizer cannot be used or the enable control disables the economizer, then the control will sequence the compressors based on the Y1 and Y2 signals.

If two-stage control has been selected, then the control will map the compressors to the Y1 and Y2 inputs as defined in the loading sequence.

If Adaptive mode has been selected, then the control will add and remove compressor stages to maintain the low and high demand leaving air set points. If Y1 is closed, at least one compressor stage will be turned on.

Heating — If W1 closes, then it will indicate that the units should be in the Heating mode. The economizer will be closed to the minimum position, and if the unit is equipped with gas or electric heat then the first stage of heat will be energized. If W2 closes, then the control will turn on the second stage of heat. If the unit is equipped with a staged gas heat control option, then the W1 signal will be used to control the gas heat to the configurable low heat load leaving air temperature set point. When W2 is energized, the unit will fire all stages of heat capacity. If the unit is equipped with gas heat, then the IGC board will control the operation of the gas heat. See the 48 Series Gas Heat units section for the IGC board sequence of operation.

Constant volume/staged air volume space temperature sensor control

If the space temperature operation has been selected using a T55, T56, or T59 sensor, then the following logic will be used to control the operation of the unit. If a space temperature is used, then a wire jumper must be added between R, W1, and W2. If a remote occupancy control method has been selected, then the input must first be closed for the unit to go into Heat, Vent or Cooling mode.

If the internal timeclock is used, the control module determines the occupancy state based on the system time schedules.

If Temperature Compensated Start is active, the unit will be controlled as in the occupied mode and will start a time as determined by prior operation to have the space at set point by the occupied time.

If the unit has been configured for a preoccupancy purge, then the control will start the unit in Vent mode prior to the occupancy time to vent the space. If an IAQ sensor is being used and the low IAQ set point is satisfied, then the occupancy purge mode will be terminated. The set points for heat and cooling are configurable through the display. If a T56 sensor is being used, then the set point can be shifted by as much as 5 degrees.

Cooling — If the space temperature goes above the cooling set point, then the unit will go into Cooling mode. If the economizer can be used, the control will first try to control to the leaving air temperature set point. The set point will depend on the space temperature. If the temperature is above the low demand set point, then the low economizer load discharge air temperature set point will be used. If the temperature is above the high load space temperature set point, then the high load leaving air temperature set point will be used. If the economizer cannot satisfy the load, then compressors will be sequenced on to maintain either the low or high load temperature set points.

If the economizer cannot be used or the enable control disables the economizer, then the control will sequence the compressors based on the low and high load space temperature variables. If two-stage control has been selected, then the control will map the compressors to the low and high loads as defined in the loading sequence. If Adaptive mode has been selected, then the control will add and remove compressor stages to maintain the high and low demand leaving air set points.

Heating — If the space temperature goes below the heating space temperature set points, then it will indicate that the units should be in the Heating mode. The economizer will be closed to the minimum position and if the unit is equipped with gas or electric heat then the first stage of heat will be energized. If the space temperature goes below the high load space temperature set point, then the control will turn on the second stage of heat. If the unit is equipped with a staged gas heat control option, then the low load demand signal will turn on heating stages to maintain the leaving air temperature set point. A high demand signal will energize all stages of heat.

Unoccupied Mode — If the unit is configured for unoccupied free cooling, mechanical cooling, or heating, and the temperature goes beyond the unoccupied configuration set points, then the control will turn on free cooling, mechanical cooling, or heat as needed to get within the unoccupied set points. When in this mode, the economizer dampers will be maintained fully closed or to the minimum unoccupied ventilation set point.

Variable air volume control

On power up, the initialization software will determine the unit configuration and also initialize any controls loops and input/output devices. All alarms and configurations are saved in memory and maintained during power outages. All alarms will be maintained in memory and must be cleared through the display.

The unit will first determine the mode of operation. If the unit has been configured for space temperature demand, then the control will determine, based on the configurable set points, if the unit should be in heat mode, vent mode, or cooling mode. If the unit is configured for return air temperature control, then it will start the fan and monitor the

return air temperature vs. the configurable set point to determine if the unit should be in cooling, vent, or heating mode.

If the control is connected to a ComfortID™ system, the room terminals are equipped with microprocessor controls that give commands to the base module. If linkage is active, the control module will replace local *Comfort*Link set points and occupancy data with linkage-supplied data.

If temperature compensated start is active, then advance pre-cool or heat of the space is enabled. If the unit is configured to use a pre-purge cycle, then the *Comfort*Link controls will start the unit in Vent mode based on a pre-start time interval. If an IAQ sensor is being used and the low IAQ control point is satisfied, then the mode will be terminated.

Cooling — If Cooling mode is required, then the controlling set point will be the leaving air temperature set point. If an economizer is present and the changeover control allows the economizer to be used, then it will first attempt to control the leaving-air temperature using free cooling. If this cannot satisfy the load, then additional compressor stages will be turned on to maintain the leaving-air temperature. When both compressors and economizers are being used, the control will use the economizer dampers to maintain better control of the leaving air and to help prevent high compressor cycling. If the economizer cannot be used, then it will be set to the minimum vent position. When using compressors, the leaving-air temperature will sequence to compressors on and off using a PID control loop.

If the unit is equipped with an optional hot gas bypass valve, the control will use the hot gas as an additional stage of capacity. When the first stage of cooling is required the control will turn on a circuit "A" compressor and the hot gas bypass valve. When additional cooling is called for it will turn off the hot gas bypass valve. The valve will also be used for additional freeze protection of the coils when low evaporator refrigerant temperatures are detected using the suction pressure transducers.

When operating in cooling mode, the control will also monitor the supply duct pressure and send a 4 to 20 mA signal to the factory-supplied inverter to control the speed of the fan and the delivered cfm. If on a linkage system, the control will also support static pressure reset based on the needs of the zones.

Heating — If the unit has been enabled for occupied heat and the space temperature sensor (SPT), return air temperature sensor (RAT), or linkage demand calls for heat, the control will energize the electric heat or gas heat (if present) to warm the space. In this mode the control will energize the heat interlock relay which will signal the terminals to open to the heating position. Note that for the linkage systems the interlock relay connection is not required. Once the Heat mode is enabled, the heat capacity will be controlled by the return air temperature set point. Heating will continue until the return temperature set point is satisfied. If the unit is configured for morning warm-up and the heating demand is below the set point during the first 10 minutes of operation, the control will energize full heating capacity until the return air temperature set point is satisfied.

If the space temperature sensor (SPT), return air temperature sensor (RAT), or linkage demand requires that the unit be in heating, then the control will energize the electric heat or gas heat (if present) to warm the space. In this mode the control will energize the heat interlock relay which should be connected to the terminals to indicate that they should open to the heating position. The interlock relay connection is not required for the linkage systems. Heating will continue until the mode selection sensor is satisfied.

Dehumidification mode

A Dehumidification mode can be initiated by either a discrete input on TB6 or by a direct measurement of humidity levels with an optional space or return air humidity sensor. When the Dehumidification mode is active, the evaporator coil leaving air temperature will be controlled to the Dehumidify Cool set point, which is typically colder than the normal cool mode leaving air set points.

In this mode, comfort condition set points, which are based on dry bulb temperature, will be overridden. If a source of reheat is available, then the leaving-air temperature can be raised to a more desirable temperature. Available methods of reheat are internal gas heat if the unit is equipped with the staged gas heating option or an external heat source that can be controlled by an auxiliary alarm relay switch.

Humidi-MiZer® operation

The design of the Humidi-MiZer adaptive dehumidification system allows for two humidity control modes of operation of the rooftop unit, utilizing a common subcooling/reheat dehumidification coil located downstream of the standard evaporator coil.

This unique and innovative design provides the capability for the rooftop unit to operate in both a subcooling mode and a hot gas reheat mode for maximum system flexibility. The Humidi-MiZer package is factory installed and will operate whenever there is a dehumidification requirement.

The Humidi-MiZer system is initiated based on input from a factory-installed return air humidity sensor to the large rooftop unit controller. Additionally, the unit controller may receive an input from a field-installed space humidity sensor, a discrete input from a mechanical humidistat, or input from a third-party controller.

A unit equipped with a Humidi-MiZer system can operate in the following modes:

Conventional Cooling mode

Conventional operation of the A series large rooftop unit allows the unit to cycle up to six compressors to maintain comfort conditions, with expanded cycling operation offered by the optional digital compressor. This mode is the conventional DX (direct expansion) cooling method used on Carrier's standard large rooftops and provides equivalent capacity to a non-Humid-MiZer equipped unit. It is used when there is a call for cooling only, such as at design AHRI (Air-Conditioning, Heating, and Refrigeration Institute) cooling conditions of 95°F ambient and 80°F/67°F db/wb entering air conditions. The SHR (sensible heat ratio) for equipment in this scenario is typically 0.7 or higher.

Subcooling mode

This modulating mode will operate to satisfy part load type conditions when there is a space call for cooling and dehumidification. Although the temperature (sensible) may have dropped and decreased the sensible load in the space, the outdoor and/or space humidity levels may have risen.

A typical scenario might be when the outside air is 85°F and 70 to 80% relative humidity (RH). Desired SHR for equipment in this scenario is typically 0.4 to 0.7. Carrier's A Series Humidi-MiZer adaptive dehumidification system will increase subcooling entering the evaporator and cycle on enough compressors to meet the latent load requirement, while simultaneously adjusting refrigerant flow to the Humidi-MiZer coil to reheat the air to the required supply air set point. This will allow the unit to provide variable SHR to meet space requirements.

Conversely, a standard unit might overcool the space or stage down to meet set point, sacrificing latent capacity control. The Humidi-MiZer unit will initiate subcooling mode when the space temperature and humidity are both above the temperature and humidity set points, and attempt to meet both requirements. Once the humidity requirement is met, the unit can continue to operate in normal cooling mode to meet any remaining sensible capacity load. Alternatively, if the sensible load is met and humidity levels remain high, the unit can switch to Hot Gas Reheat mode to provide neutral, dehumidified air.

Hot Gas Reheat mode

This modulating mode is used when dehumidification is required without a need for cooling, such as when the outside air is at a neutral temperature (70 to 75°F) but high humidity exists. This situation requires the equipment to operate at a SHR of 0.0 to 0.2.

With no cooling requirement and a call for dehumidification, the A Series Humidi-MiZer adaptive dehumidification system will cycle on enough compressors to meet the latent load requirement, while simultaneously modulating refrigerant flow to the Humidi-MiZer® coil to reheat the air to the desired neutral air set point.

The A-Series Humid-MiZer system controls allow for the discharge air to be reheated either to the return-air temperature minus a configurable offset or to a configurable Reheat set point (default 70°F). The Hot Gas Reheat mode will be initiated when only the humidity is above the humidity set point, without a demand for cooling.

Mode control

The essential difference between the Subcooling mode and the Hot Gas Reheat mode is in the supply air set point. In Subcooling mode, the supply air set point is the temperature required to provide cooling to the space. In Reheat mode, the supply air set point is the temperature required to provide neutral air to the space. In both cases, the unit will decrease the evaporator discharge temperature to meet the latent load and reheat the air to the required cooling or reheat set point (i.e., 50, 60, 70°F, etc.).

48 series gas heat units

The gas heat units incorporate 2 (3 on size 060) separate systems to provide gas heat. Each system incorporates its own induced-draft motor, integrated gas control (IGC) board, 2-stage gas valve, manifold, and safeties. For 2-stage heat control, the systems are operated in parallel. For example, when there is a call for first stage heat, both induced-draft motors operate, both gas valves are energized, and both IGC boards initiate spark.

With the staged gas control, the systems are operated independently to allow for a greater range of capacity control. All of the gas heating control is performed through the IGC boards (located in the heating section). The MBB module board serves only to initiate and terminate heating operation and monitor the status of the requirements for indoor fan operation.

The fan will be controlled directly by the MBB board. The base module board is powered by 24 vac. When the thermostat or room sensor calls for heating, the MBB board will close heating relays and send power to W on each of the IGC boards.

An LED on the IGC board will be on during normal operation. A check is made to ensure that the rollout switches and limit switches are closed and the induced-draft motors are not running. After the induced-draft motors are energized and speed is proven with the Hall Effect sensor on the motor, the ignition activation period begins. The burners will ignite within 5 seconds.

When ignition occurs, the IGC board will continue to monitor the condition of the rollout and limit switches, the Hall Effect sensor, and the flame sensor. If the unit is controlled through a room thermostat set for fan auto, 45 seconds after ignition occurs the indoor-fan motor will be energized and the outdoor-air dampers will open to their minimum position.

If the overtemperature limit opens prior to the start of the indoor fan blower, on the next attempt the 45-second delay will be shortened to 5 seconds less than the time from initiation of heat to when the limit tripped. Gas will not be interrupted to the burners and heating will continue. Once modified, the fan on delay will not change back to 45 seconds unless power is reset to the control.

If the unit is controlled through a room sensor, the indoor fan will be operating in the occupied mode and the outdoor-air dampers will be in the minimum position. If the unit is controlled with a room sensor in the unoccupied mode, the indoor fan will be energized through the IGC board with a 45-second delay and the outside-air dampers will move to the minimum unoccupied set point.

When additional heat is required, the second stage MBB output relay closes and initiates power to the second stage of all main gas valves in all sections. When the demand is satisfied, MBB heat output relays will open and the gas valves close, interrupting the flow of gas to the main burners. If the call for stage 1 heat lasts less than 1 minute, the heating cycle will not terminate until 1 minute after W1 became active. If the unit is configured for intermittent fan, the indoor-fan motor will continue to operate for an additional 45 seconds, then stop, and the outdoor-air dampers will close. If the overtemperature limit opens after the indoor motor is stopped within 10 minutes of W1 becoming inactive, on the next cycle the time will be extended by 15 seconds. The maximum delay is 3 minutes. Once modified, the fan off delay will not change back to 45 seconds unless power is reset to the control.

Application data

Ductwork — Secure vertical discharge ductwork to roof curb. Interior installation may proceed before unit is set in place on roof. For horizontal discharge applications, attach ductwork to unit, or field-supplied flanges can be attached to horizontal discharge openings and all ductwork attached to flanges. Units equipped with electric heat require a 90-degree elbow below the unit supply duct connection.

Thru-the-curb service connections — Roof curb connections allow field power wires and control wires to enter through the roof curb opening.

Thermostat (CV only) — Use of a thermistor-type room sensor is recommended on all CCN installations. A thermistor-type room sensor or a 2-stage heating/cooling thermostat may be used for all other units.

Heating-to-cooling changeover — All units are automatic changeover from heating to cooling when automatic changeover thermostat and subbase or a thermistor-type room sensor are used.

Airflow — Units are draw-thru on cooling and blow-thru on heating.

Maximum airflow — To minimize the possibility of condensate blow-off from evaporator, airflow through units should not exceed values shown in Cooling Cfm Operating Range table and Cooling Capacities tables.

Minimum airflow — The minimum airflow for cooling is 300 cfm/ton for constant volume units and 70 cfm/ton for VAV (variable air volume) units. Performance at 70 cfm/ton is limited to unloaded operation and may be additionally limited by entering-air temperatures or Humidi-MiZer operation. Refer to Gas Heating Capacities and Efficiencies table on page 8 for minimum airflow cfm for heating.

Minimum ambient cooling operation temperature — All units are equipped with factory economizers to allow free cooling at any outdoor ambient. If mechanical cooling is required, the units are designed to operate at outdoor temperatures down to 32°F. Greenspeed® control units can operate at outdoor temperatures down to –20°F.

Carrier recommends the installation of field-fabricated wind baffles on all vertically oriented condenser coil surfaces when operating in environments with prevailing winds of more than 5 mph and where temperatures drop below 32°F.

Maximum operating outdoor-air temperature — The maximum operating outdoor-air temperature is 115°F. Some models will operate up to 125°F depending on model and operating conditions.

High altitude (gas heat units only) — A change to the gas orifice may be required at high altitudes. Refer to Altitude Compensation table on page 10.

Minimum temperature — Minimum allowable temperature of mixed air entering the heat exchanger during half rate (first stage) operation is 50°F. There is no minimum mixture temperature during full-rate operation. Comfort conditioning may be compromised at temperatures below 50°F. Below 50°F entering-air temperature (EAT) both stages of heat are engaged.

Internal unit design — Due to Carrier's internal unit design (draw-thru over the motor), air path, and specially designed motors, the full horsepower listed in the Physical Data table and Motor Limitations table can be used with extreme confidence. Using Carrier motors with the values listed in the Physical Data and Motor Limitations tables will not result in nuisance tripping or premature motor failure. The unit warranty will not be affected.

Electric heat — A field-supplied 90-degree elbow must be installed in the supply ductwork below the unit discharge.

Application data (cont)

Acoustical considerations

In order to minimize sound transmitted to the space, please conform to the following recommendations:

Location

- Avoid locating the unit above sound-sensitive areas. Instead, locate the unit above restrooms, storage areas, corridors, or other noise-tolerant areas.
- Avoid mounting the unit in the middle of large roof expanses between vertical supports. This will minimize the phenomenon known as roof bounce.
- Install the units close to vertical roof supports (columns or load bearing walls).
- Locate the units at least 25 feet away from critical areas. If this is not possible, the ductwork and ceiling structure should be acoustically treated.
- Consider the use of vibration isolators or an acoustic curb.

Ductwork

- Use flexible connectors between the unit and the supply and return ducts.
- Supply and return air main trunk ducts should be located over hallways and/or public areas.
- Provide trailing edge turning vanes in ductwork elbows and tees to reduce air turbulence.
- Make the ductwork as stiff as possible.
- Use round duct wherever possible because it is less noisy.
- Seal all penetrations around ductwork entering the space.
- Make sure that ceiling and wall contractors do not attach hangers or supports to ductwork.
- Provide as smooth and gradual transition as possible when connecting the rooftop unit discharge to the supply duct.
- If a ceiling plenum return is used, provide a return elbow or tee to eliminate line-of-sight noise to the space. Face the entrance of the return duct away from other adjacent units.

Acoustic insulation

- Provide acoustic interior lining for first 20 feet of supply and return duct or until the first elbow is encountered. The elbow prevents line-of-sight transmission in the supply and return ducts.
- Install a double layer of 2-in. low density quilted fiberglass acoustical pad with a $^1/_8$-in. barium-loaded vinyl facing on top of the roof deck before building insulation and roofing installation occur. Place the material inside the curb and for 4 to 8 ft beyond the unit perimeter, dependent upon unit size (larger units require a wider apron outside the curb). Openings in the pad should only be large enough for the supply and return ducts. An alternate approach is to use two layers of gypsum board with staggered seams in addition to the acoustical pad.

ACOUSTICAL CONSIDERATIONS

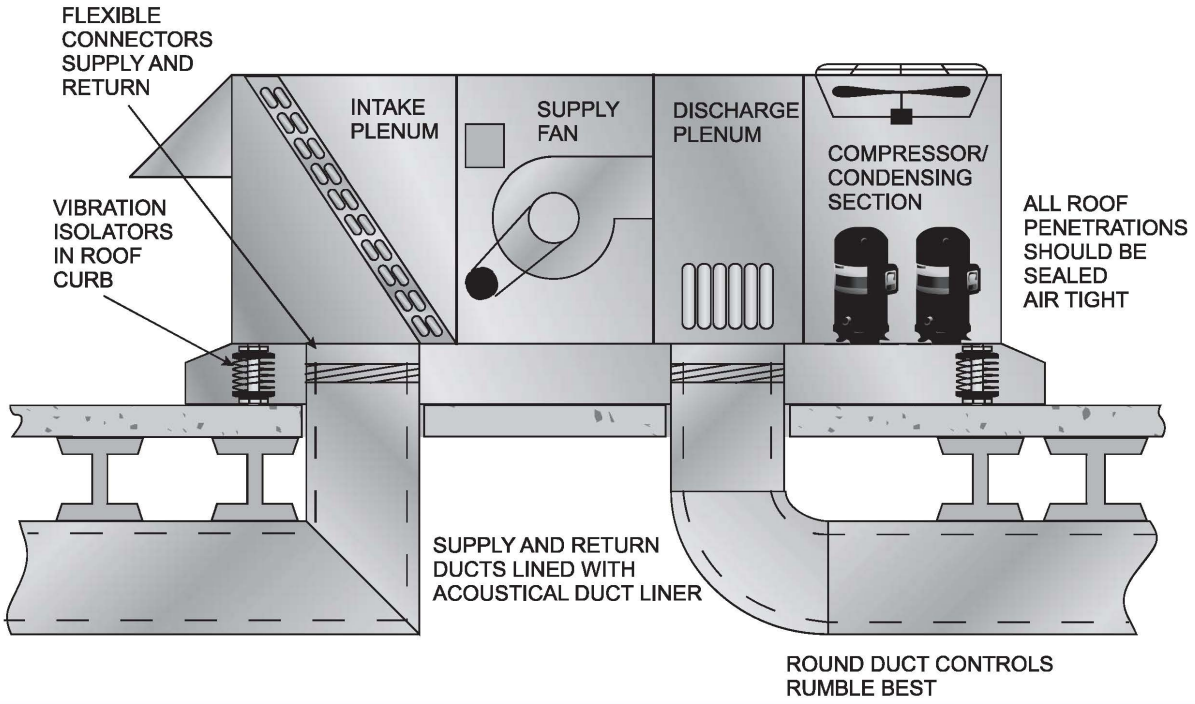

Application data (cont)

MULTIPLE UNIT APPLICATION SPACING

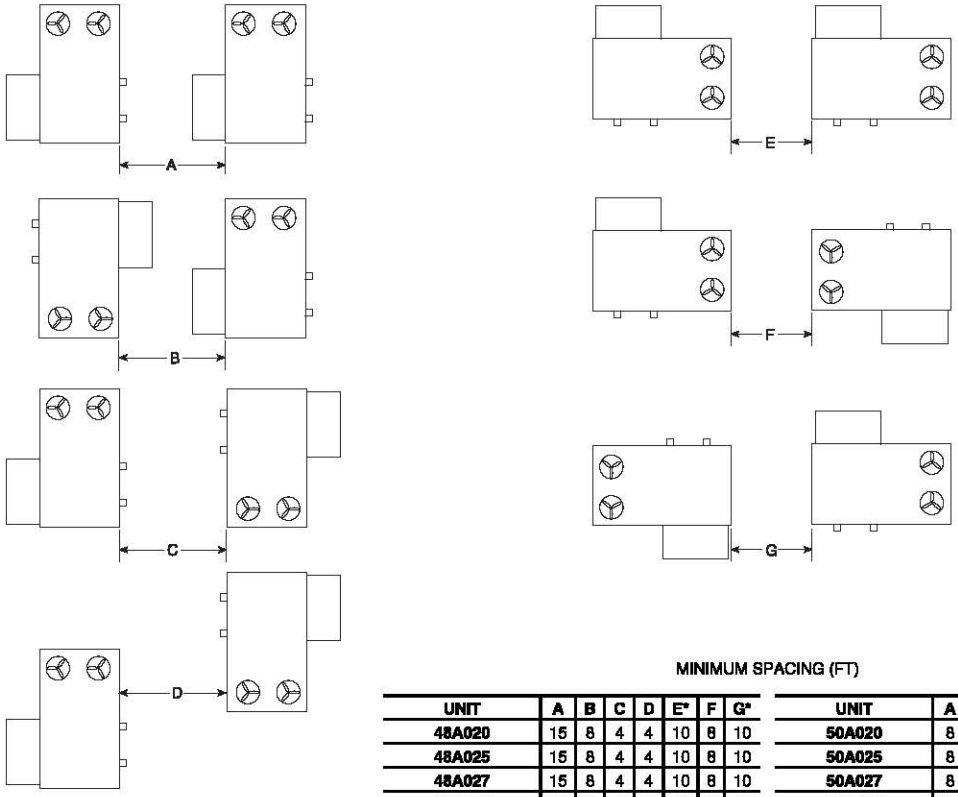

MINIMUM SPACING (FT)

UNIT	A	B	C	D	E*	F	G*
48A020	15	8	4	4	10	8	10
48A025	15	8	4	4	10	8	10
48A027	15	8	4	4	10	8	10
48A030	15	8	4	4	10	8	10
48A035	15	8	4	4	10	8	10
48A040	15	8	4	8	10	4	10
48A050	15	8	4	8	10	4	10
48A060	15	8	4	8	15	4	15

UNIT	A	B	C	D	E*	F	G*
50A020	8	8	4	4	10	8	10
50A025	8	8	4	4	10	8	10
50A027	8	8	4	4	10	8	10
50A030	8	8	4	4	10	8	10
50A035	8	8	4	4	10	8	10
50A040	8	8	4	8	10	4	10
50A050	8	8	4	8	10	4	10
50A060	8	8	4	8	15	4	15

* Required for coil removal. Can reduce to 6 ft if coil removed from top.

TYPICAL POWER SCHEMATIC (48/50A2,3,4,5 040 SHOWN)

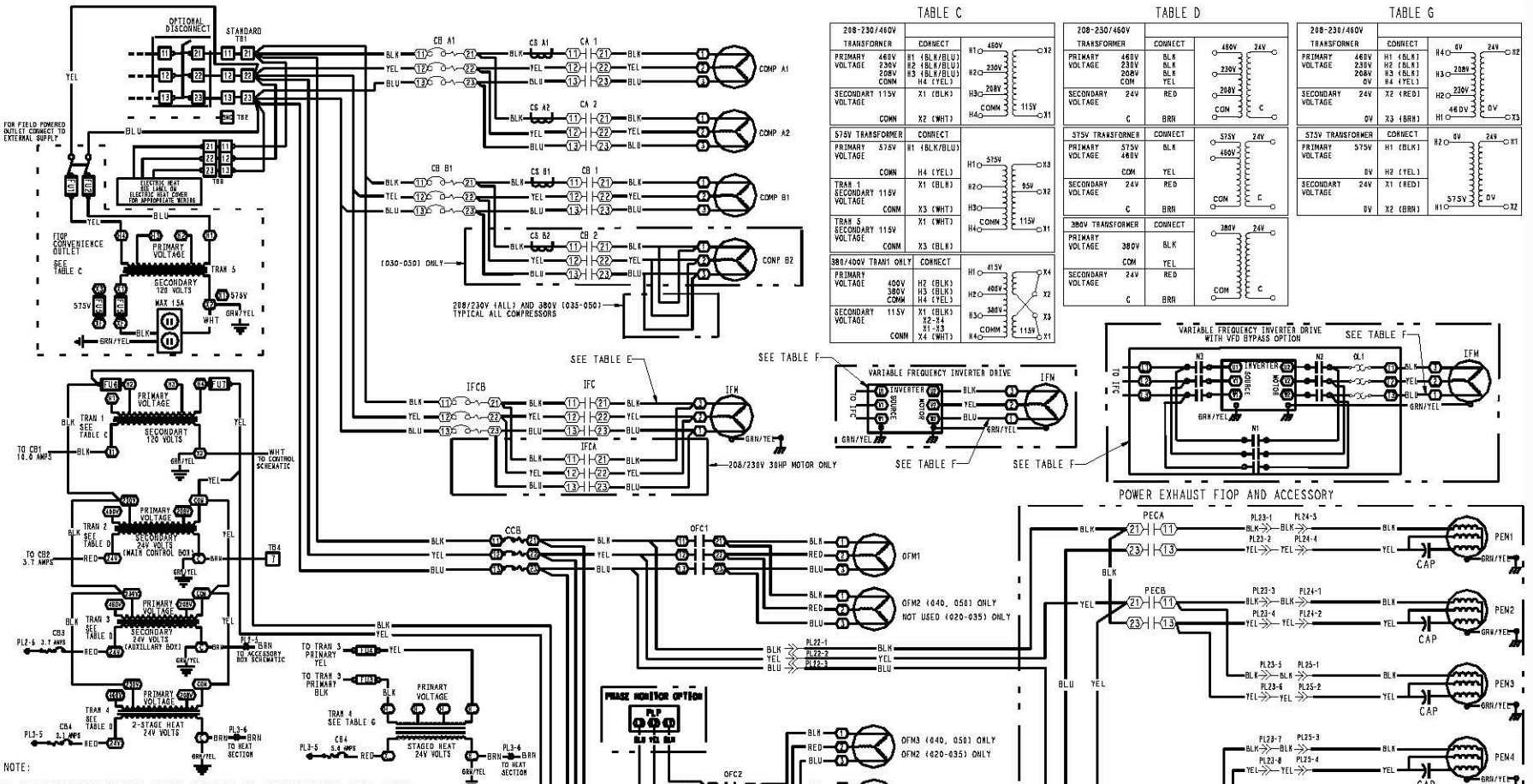

TABLE C

208-230/460V TRANSFORMER		CONNECT
PRIMARY VOLTAGE	460V	H1 (BLK/BLU)
	230V	H2 (BLK/BLU)
	208V	H3 (BLK/BLU)
	COMN	H4 (YEL)
SECONDARY VOLTAGE	115V	X1 (BLK)
	COMN	X2 (WHT)
575V TRANSFORMER		CONNECT
PRIMARY VOLTAGE	575V	H1 (BLK/BLU)
	COMN	H4 (YEL)
TRAN 1 SECONDARY VOLTAGE	115V	X1 (BLK)
	COMN	X3 (WHT)
TRAN 5 SECONDARY VOLTAGE	115V	X1 (WHT)
	COMN	X3 (BLK)
380/400V TRANS ONLY		CONNECT
PRIMARY VOLTAGE	400V	H2 (BLK)
	380V	H3 (BLK)
	COMN	H4 (YEL)
SECONDARY VOLTAGE	115V	X1 (BLK) X2-X4 X1-X3 X4 (WHT)
	COMN	

TABLE D

208-230/460V TRANSFORMER		CONNECT
PRIMARY VOLTAGE	460V	BLK
	230V	BLK
	208V	YEL
	COM	
SECONDARY VOLTAGE	24V	RED
	C	BRN
575V TRANSFORMER		CONNECT
PRIMARY VOLTAGE	575V	BLK
	460V	
	COM	YEL
SECONDARY VOLTAGE	24V	RED
	C	BRN
380V TRANSFORMER		CONNECT
PRIMARY VOLTAGE	380V	BLK
	COM	YEL
SECONDARY VOLTAGE	24V	RED
	C	BRN

TABLE G

208-230/460V TRANSFORMER		CONNECT
PRIMARY VOLTAGE	460V	H1 (BLK)
	230V	H2 (BLK)
	208V	H3 (BLK)
	0V	H4 (YEL)
SECONDARY VOLTAGE	24V	X2 (RED)
	0V	X3 (BRN)
575V TRANSFORMER		CONNECT
PRIMARY VOLTAGE	575V	H1 (BLK)
	0V	H2 (YEL)
SECONDARY VOLTAGE	24V	X1 (RED)
	0V	X2 (BRN)

NOTE:

1. TRANSFORMER WIRING FOR SUPPLY VOLTAGES ARE SHOWN IN TABLE C,D & G.FOR 208/230 VOLT UNITS THE TRANSFORMERS ARE FACTORY WIRED FOR 230 VOLT AND MUST BE REWIRED IN THE FIELD FOR 208 VOLT APPLICATIONS.
2. TABLE E & F INDICATE USE OF PARALLELED INDOOR FAN MOTOR CONDUCTORS. ALL INDOOR FAN MOTOR HP'S AND VOLTAGES NOT LISTED USE SINGLE CONDUCTORS.

FUSE NUMBER	UNIT VOLTAGE	TRAN SIZE	REPLACE WITH
FU1 & FU2	208/230-3-60	1000VA	FNQ-R-7
	460-3-60		FNQ-R-3.5
	575-3-60		FNQ-R-2.5
FU3 & FU4	208/230-3-60	100VA	FNQ-R-1
	460-3-60		FNQ-R-0.5
	575-3-60		FNQ-R-0.5
FU5	115-1-60 (SECONDARY)	1000VA	FRN-12
FU6 & FU7	208/230-3-60	750VA	FNQ-R-5
	380-3-60		FNQ-R-5
	460-3-60		FNQ-R-4
	575-3-60		FNQ-R-3.5

TABLE E

CV UNITS:INDOOR FAN MOTOR CONDUCTORS			
IFM HP	208/230V	460V	380V
	IFC TO IFM	IFC TO IFM	IFC TO IFM
5	SINGLE	SINGLE	SINGLE
10	SINGLE	SINGLE	SINGLE
15	SINGLE	SINGLE	SINGLE
20	PARALLEL	SINGLE	SINGLE
25	PARALLEL	SINGLE	SINGLE
30	PARALLEL	PARALLEL	PARALLEL

TABLE F

VAV UNITS:INDOOR FAN MOTOR CONDUCTORS						
IFM HP	208/230V		460V		380V	
	IFC TO VFD	VFD TO IFM	IFC TO VFD	VFD TO IFM	IFC TO VFD	VFD TO IFM
5	SINGLE	SINGLE	SINGLE	SINGLE	SINGLE	SINGLE
10	SINGLE	SINGLE	SINGLE	SINGLE	SINGLE	SINGLE
15	PARALLEL*	SINGLE	SINGLE	SINGLE	SINGLE	SINGLE
20	PARALLEL	PARALLEL	SINGLE	SINGLE	SINGLE	SINGLE
25	PARALLEL	PARALLEL	SINGLE	SINGLE	PARALLEL	SINGLE
30	PARALLEL	PARALLEL	PARALLEL	SINGLE	PARALLEL	SINGLE

* SINGLE FOR 040

TYPICAL POWER SCHEMATIC FOR GREENSPEED/LOW AMBIENT OPTION (48/50A6,A7,A8,A9 040 SHOWN)

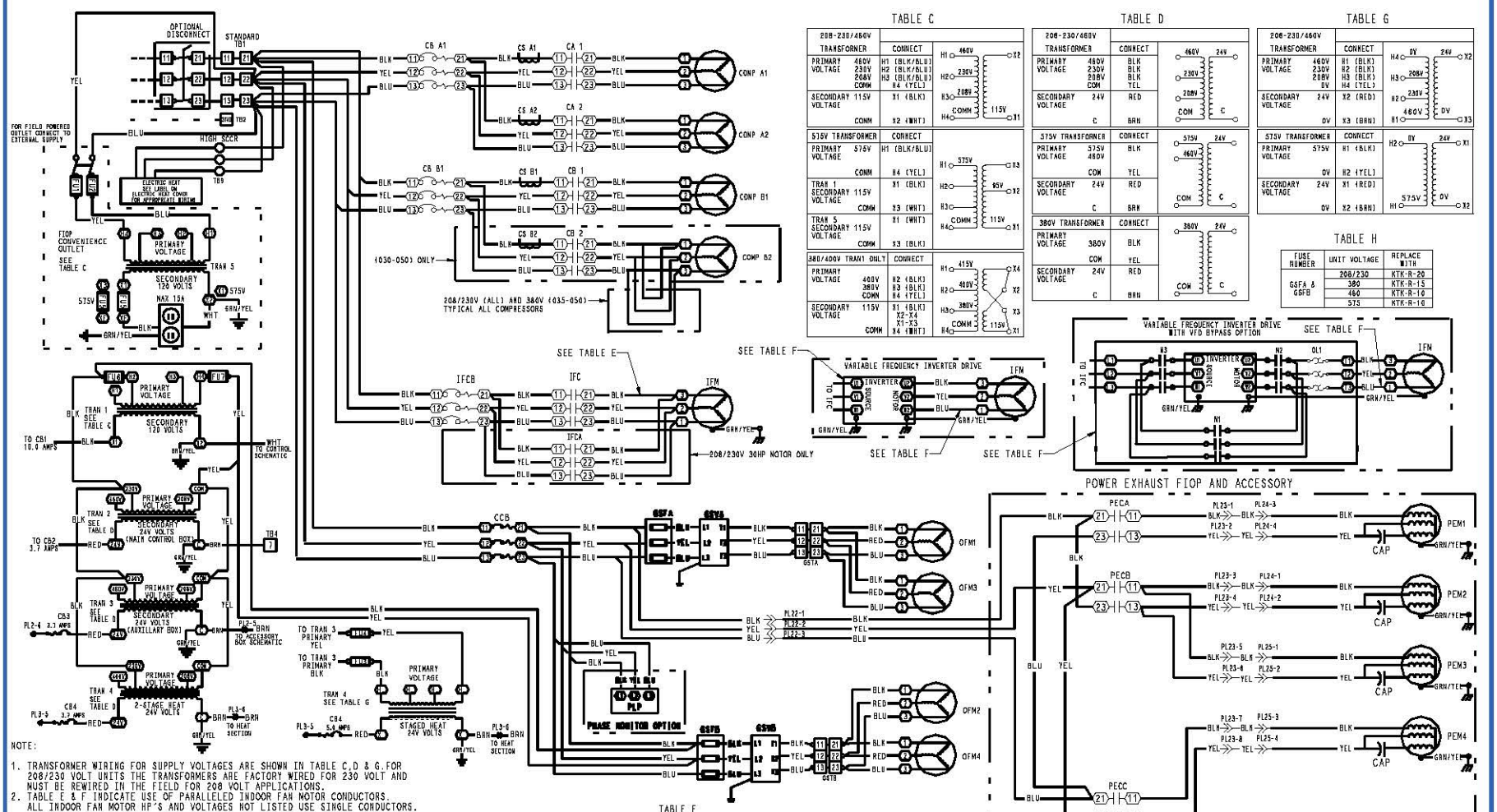

TABLE C

208-230/460V TRANSFORMER	CONNECT
PRIMARY VOLTAGE 460V	H1 (BLK/BLU)
230V	H2 (BLK/BLU)
208V	H3 (BLK/BLU)
COMM	H4 (YEL)
SECONDARY VOLTAGE 115V	X1 (BLK)
COMM	X2 (WHT)

575V TRANSFORMER	CONNECT
PRIMARY VOLTAGE 575V	H1 (BLK/BLU)
COMM	H4 (YEL)
TRAN 1 SECONDARY VOLTAGE 115V	X1 (BLK)
COMM	X3 (WHT)
TRAN 5 SECONDARY VOLTAGE 115V	X1 (WHT)
COMM	X3 (BLK)

380/400V TRAN1 ONLY	CONNECT
PRIMARY VOLTAGE 400V	H2 (BLK)
380V	H3 (BLK)
COMM	H4 (YEL)
SECONDARY VOLTAGE 115V	X1 (BLK) X2-X4 X1-X3
COMM	X4 (WHT)

TABLE D

208-230/460V TRANSFORMER	CONNECT
PRIMARY VOLTAGE 460V	BLK
230V	BLK
208V	BLK
COM	YEL
SECONDARY VOLTAGE 24V	RED
C	BRN

575V TRANSFORMER	CONNECT
PRIMARY VOLTAGE 575V	BLK
460V	YEL
COM	YEL
SECONDARY VOLTAGE 24V	RED
C	BRN

380V TRANSFORMER	CONNECT
PRIMARY VOLTAGE 380V	BLK
COM	YEL
SECONDARY VOLTAGE 24V	RED
C	BRN

TABLE G

208-230/460V TRANSFORMER	CONNECT
PRIMARY VOLTAGE 460V	H1 (BLK)
230V	H2 (BLK)
208V	H3 (BLK)
0V	H4 (YEL)
SECONDARY VOLTAGE 24V	X2 (RED)
0V	X3 (BRN)

575V TRANSFORMER	CONNECT
PRIMARY VOLTAGE 575V	H1 (BLK)
0V	H2 (YEL)
SECONDARY VOLTAGE 24V	X1 (RED)
0V	X2 (BRN)

TABLE H

FUSE NUMBER	UNIT VOLTAGE	REPLACE WITH
GSFA & GSFB	208/230	KTK-R-20
	380	KTK-R-15
	460	KTK-R-10
	575	KTK-R-10

NOTE:

1. TRANSFORMER WIRING FOR SUPPLY VOLTAGES ARE SHOWN IN TABLE C,D & G.FOR 208/230 VOLT UNITS THE TRANSFORMERS ARE FACTORY WIRED FOR 230 VOLT AND MUST BE REWIRED IN THE FIELD FOR 208 VOLT APPLICATIONS.
2. TABLE E & F INDICATE USE OF PARALLELED INDOOR FAN MOTOR CONDUCTORS. ALL INDOOR FAN MOTOR HP'S AND VOLTAGES NOT LISTED USE SINGLE CONDUCTORS.

FUSE NUMBER	UNIT VOLTAGE	TRAN SIZE	REPLACE WITH
FU1 & FU2	208/230-3-60	1000VA	FNQ-R-7
	460-3-60		FNQ-R-3.5
	575-3-60		FNQ-R-2.5
FU3 & FU4	208/230-3-60	100VA	FNQ-R-1
	460-3-60		FNQ-R-0.5
	575-3-60		FNQ-R-0.5
FU5	115-1-60 (SECONDARY)	1000VA	FNN-12
FU6 & FU7	208/230-3-60	750VA	FNQ-R-5
	380-3-60		FNQ-R-5
	460-3-60		FNQ-R-4
	575-3-60		FNQ-R-3.5

TABLE E

CV UNITS:INDOOR FAN MOTOR CONDUCTORS			
IFM HP	208/230V	460V	380V
	IFC TO IFM	IFC TO IFM	IFC TO IFM
5	SINGLE	SINGLE	SINGLE
10	SINGLE	SINGLE	SINGLE
15	SINGLE	SINGLE	SINGLE
20	PARALLEL	SINGLE	SINGLE
25	PARALLEL	SINGLE	SINGLE
30	PARALLEL	PARALLEL	PARALLEL

TABLE F

VAV UNITS:INDOOR FAN MOTOR CONDUCTORS						
IFM HP	208/230V		460V		380V	
	IFC TO VFD	VFD TO IFM	IFC TO VFD	VFD TO IFM	IFC TO VFD	VFD TO IFM
5	SINGLE	SINGLE	SINGLE	SINGLE	SINGLE	SINGLE
10	SINGLE	SINGLE	SINGLE	SINGLE	SINGLE	SINGLE
15	PARALLEL*	SINGLE	SINGLE	SINGLE	SINGLE	SINGLE
20	PARALLEL	PARALLEL	SINGLE	SINGLE	SINGLE	SINGLE
25	PARALLEL	PARALLEL	SINGLE	SINGLE	PARALLEL	SINGLE
30	PARALLEL	PARALLEL	PARALLEL	SINGLE	PARALLEL	SINGLE

* SINGLE FOR 040

POWER SCHEMATIC

48/50 GREEN SPEED/LOW AMBIENT OPTION 040-050

50EJ000075	REV -

MAIN BOX CONTROL SCHEMATIC 48/50A020-060

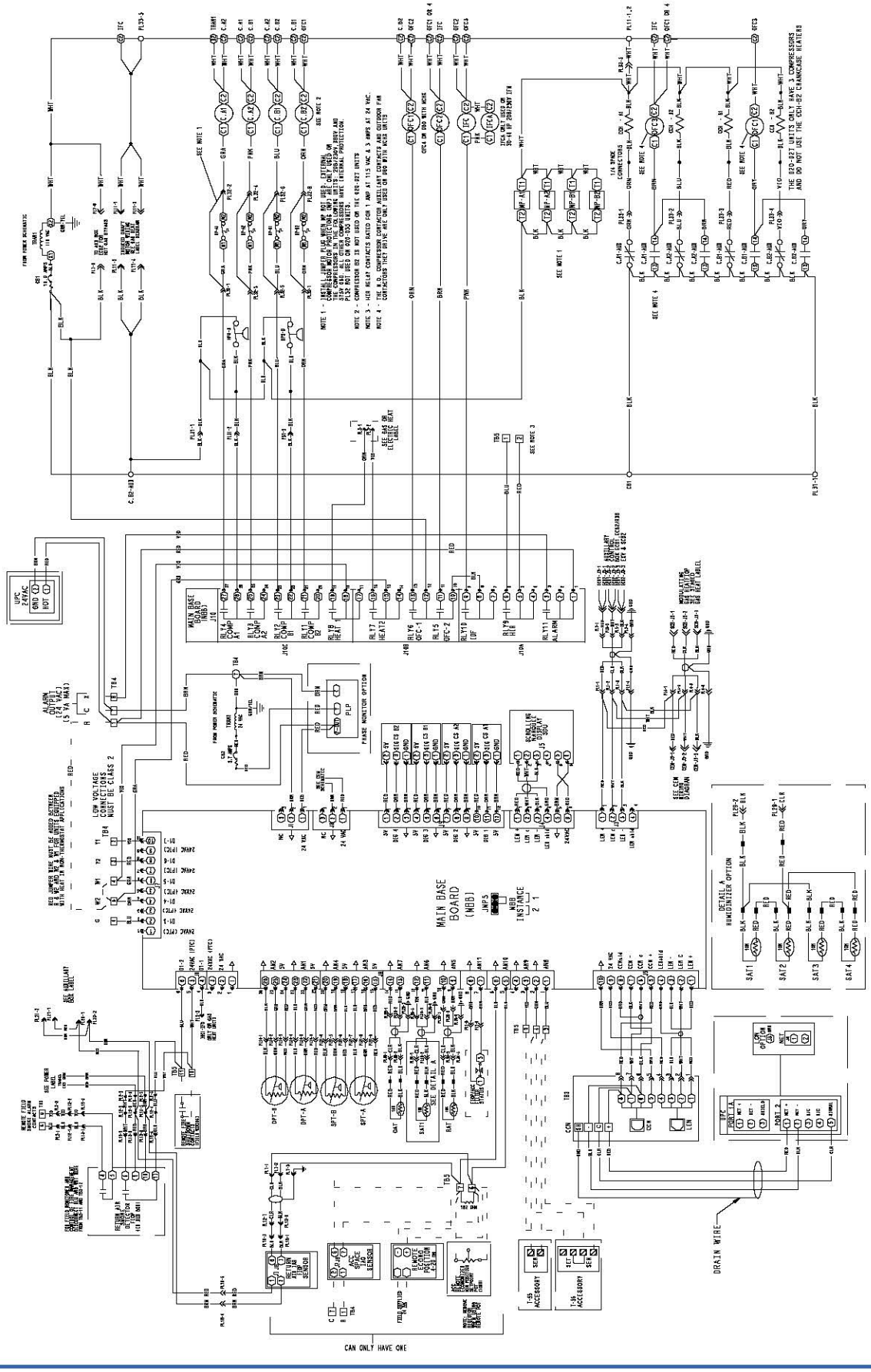

Typical wiring schematics (cont)

AUXILIARY CONTROL BOX SCHEMATIC 48/50A020-060

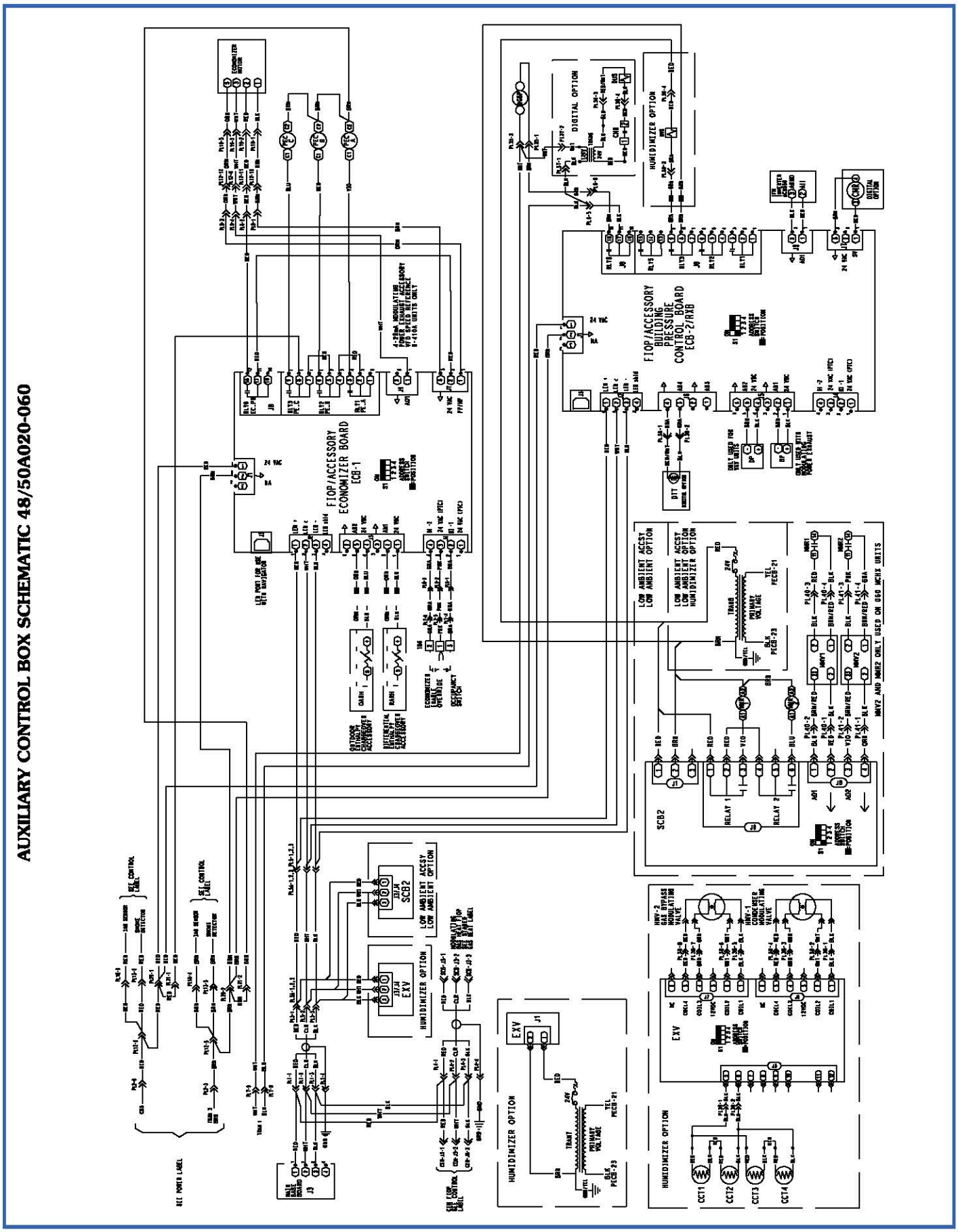

CONTROLS EXPANSION MODULE WIRING SCHEMATIC 48/50A020-060

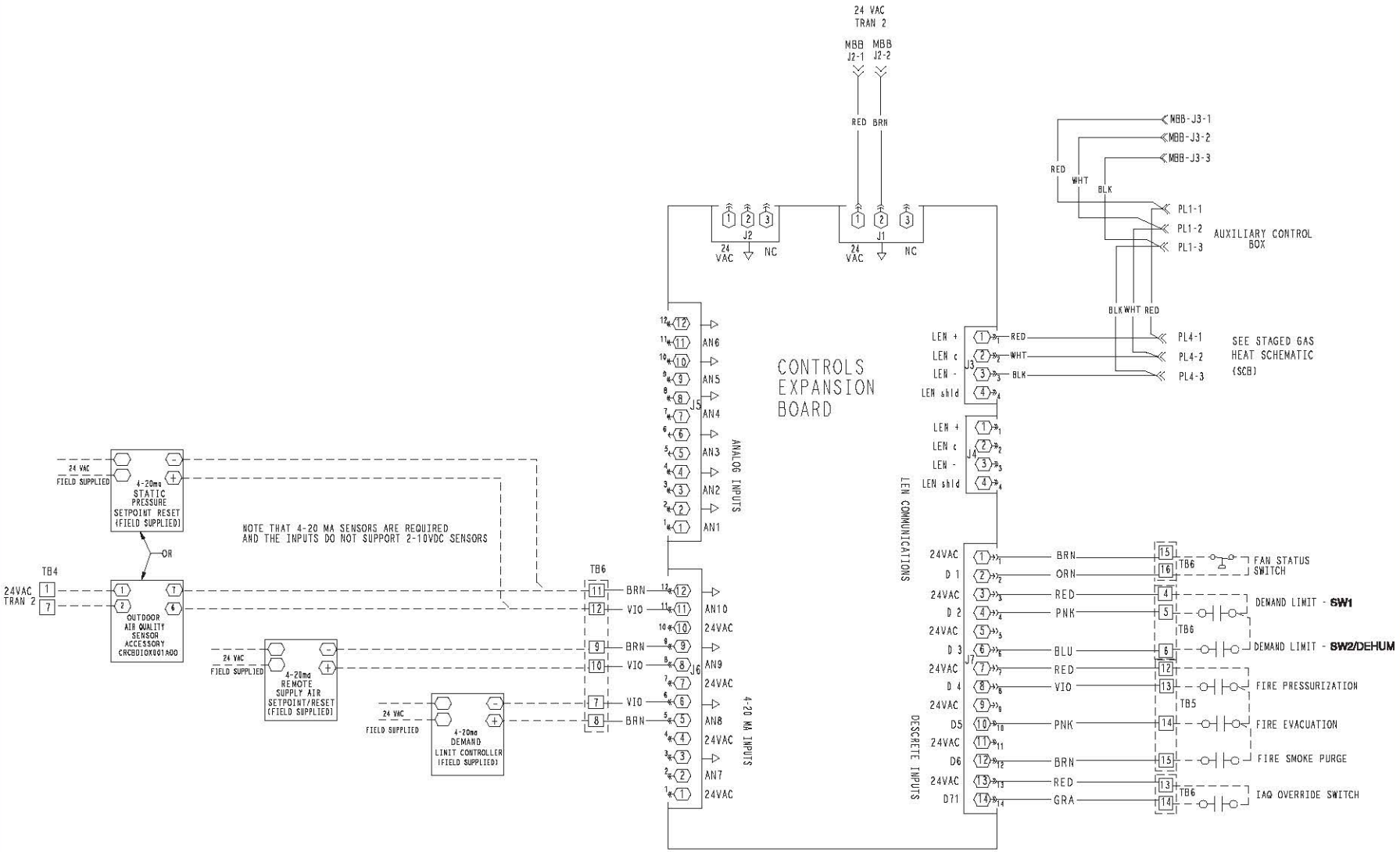

GAS HEAT CONTROL SCHEMATIC (TWO-STAGE HEAT) 48A2,A3,A6,A7020-060

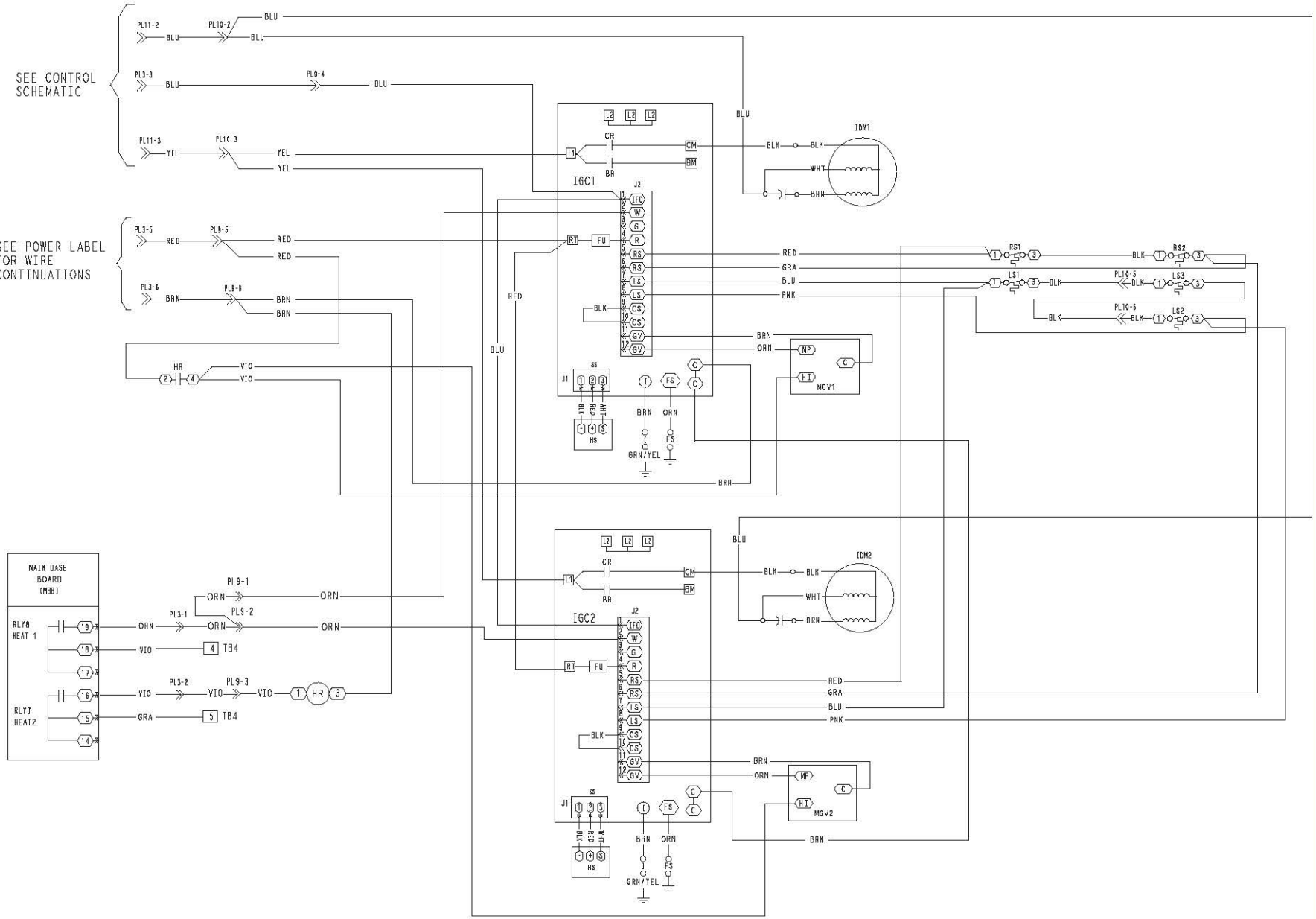

LEGEND FOR TYPICAL WIRING SCHEMATICS

LEGEND

A	—	Circuit A
AUX	—	Auxiliary Contact
BP	—	Building Pressure Transducer
C	—	Compressor Contactor
CAP	—	Capacitor
CB	—	Circuit Breaker
CCB	—	Control Circuit Breaker
CCH	—	Crankcase Heater
CCN	—	Carrier Comfort Network®
CCT	—	Cooling Coil Thermistor
CEM	—	Controls Expansion Module
CMR	—	Compressor Modulation Relay
COMP	—	Compressor
CS	—	Compressor Current Sensor Board
DP	—	Discharge Pressure Transducer
DPT	—	Discharge Pressure Transducer
DTT	—	Digital Scroll Discharge Temperature Thermistor
DUS	—	Digital Unloader Solenoid
ECB-1	—	Economizer Control Board
ECB-2	—	VAV Control Board
EDT	—	Evaporator Discharge Temperature
EXV	—	Expansion Valve Control Board
FIOP	—	Factory-Installed Option
FS	—	Flame Sensor
FU	—	Fuse
GND	—	Ground
HGBP	—	Hot Gas Bypass
HMV	—	Humidi-MiZer Valve
HPS	—	High-Pressure Switch
HR	—	Heat Relay
HS	—	Hall Effect Induced Draft Motor Switch
HVS	—	Humidi-MiZer Valve Solenoid
IAQ	—	Indoor Air Quality
IDM	—	Induced-Draft Motor
IFC	—	Indoor-Fan Contactor
IFCB	—	Indoor-Fan Circuit Breaker
IFM	—	Indoor-Fan Motor
IGC	—	Integrated Gas Control Board
IP	—	Internal Compressor Protector
LEN	—	Local Equipment Network
LS	—	Limit Switch
MBB	—	Main Base Board
MGV	—	Main Gas Valve
OARH	—	Outdoor Air Relative Humidity
OAT	—	Outdoor Air Temperature Sensor
OFC	—	Outdoor-Fan Contactor
OFM	—	Outdoor-Fan Motor
OL	—	Overload
PEC	—	Power Exhaust Contactor
PEM	—	Power Exhaust Motor
PL	—	Plug
PLP	—	Phase Loss Protection
PTC	—	Positive Temperature Coefficient
RARH	—	Return Air Relative Humidity
RAT	—	Return Air Temperature Sensor
RS	—	Rollout Switch
RXB	—	Rooftop Control Board
SCB	—	Staged Gas Heat Control Board
SDU	—	Scrolling Marquee Display
SPT	—	Suction Pressure Transducer
T-55	—	Room Temperature Sensor
T-56	—	Room Temperature Sensor with Set Point
TB	—	Terminal Block
TRANS	—	Transformer
UPC	—	Universal Protocol Converter
VAV	—	Variable Air Volume
VFD	—	Variable Frequency Drive

THERMOSTAT MARKINGS

BM	—	Blower Motor
C	—	Common
CM	—	Inducer Motor
CS	—	Centrifugal Switch
G	—	Fan
IFO	—	Indoor Fan On
L1	—	Line 1
R	—	Thermostat Power
RT	—	Power Supply
SS	—	Speed Sensor
W1	—	Thermostat Heat Stage 1
W2	—	Thermostat Heat Stage 2
X	—	Alarm Output
Y1	—	Thermostat Cooling Stage 1
Y2	—	Thermostat Cooling Stage 2



Terminal (Marked)


Terminal (Unmarked)



Terminal Block


Splice

Factory Wiring

Field Wiring

To indicate common potential only, not to represent wiring.

Packaged Rooftop Cooling Unit and Packaged Rooftop Cooling Unit with Gas Heat — Constant Volume or Staged Air Volume Application

HVAC Guide Specifications — Section 48/50A2,A4,A6,A8

Size Range: **20 to 60 Tons, Nominal (Cooling)**

Carrier Model Number: **48A2, 48A4, 48A6, 48A8, 50A2, 50A4, 50A6, 50A8**

Part 1 — General

1.01 SYSTEM DESCRIPTION

Outdoor roof curb or slab mounted, electronically controlled heating and cooling unit utilizing hermetic scroll compressors with crankcase heaters for cooling duty and with optional gas heat or electric heat. Units shall discharge supply and return air vertically or horizontally as shown on contract drawings. EER (Energy Efficiency Ratio) shall meet requirements of ASHRAE (American Society of Heating, Refrigeration and Air-Conditioning Engineers) Standard 90.1-2013.

1.02 QUALITY ASSURANCE

A. Unit shall be rated in accordance with AHRI (Air-Conditioning, Heating, and Refrigeration Institute) Standard 340/360, latest edition.

B. Unit shall be designed to conform to ANSI (American National Standards Institute)/ASHRAE 15, ASHRAE 62, and UL (Underwriters Laboratories) Standard 1995.

C. Unit shall be listed by ETL and ETL, Canada as a total package.

D. The 48A2,A4,A6,A8 units shall be designed to conform with ANSI Standard Z21.47 (U.S.A.) / CSA (Canadian Standards Association) Standard 2.3 (Canada), Gas-Fired Central Furnaces.

E. Roof curb shall be designed to NRCA (National Roofing Contractors Association) criteria per Bulletin B-1986.

F. Insulation and adhesive shall meet NFPA (National Fire Protection Association) 90A requirements for flame spread and smoke generation.

G. The management system governing the manufacture of this product is ISO (International Organization for Standardization) 9001:2008 certified.

1.03 DELIVERY, STORAGE AND HANDLING

Unit shall be stored and handled per manufacturer's recommendations. All exposed coils shall have protective shipping covers.

Part 2 — Products

2.01 EQUIPMENT

A. General:

Factory-assembled, single-piece heating and cooling unit. Contained within the unit enclosure shall be all factory wiring, piping, refrigerant charge (R-410A), operating oil charge, dual refrigerant circuits, microprocessor based control system and associated hardware, and all special features required prior to field start-up.

B. Unit Cabinet:

1. Constructed of galvanized steel, bonderized and precoated with a baked enamel finish.
   a. Top cover shall be 18-gage sheet metal with 0.75-in. thick, 1.5-lb density, fiberglass insulation.
   b. Access panels and doors shall be 20-gage sheet metal with 0.5-in. thick, 1.5-lb density, fiberglass insulation.
   c. Corner and center posts shall be 16-gage galvanized steel.
   d. Basepans in the heating and return air sections shall be 16-gage galvanized steel.
   e. Basepans in the condenser section shall be 16-gage galvanized steel.
   f. Compressor rail shall be 12-gage galvanized steel.
   g. Condensate pan shall be 16-gage aluminized steel.
   h. Air baffles shall be 18-gage galvanized steel with 0.5-in. thick, 1.5-lb density, fiberglass insulation.
   i. Base rail shall be 14-gage galvanized steel.
   j. Fan deck (indoor and outdoor section) shall be 16-gage galvanized steel.
2. Unit casing shall be capable of withstanding 500-hour salt spray exposure per ASTM (American Society for Testing and Materials) B117 (scribed specimen).
3. Sides shall have person-sized insulated hinged access doors for easy access to the control box and other areas requiring servicing. Each door shall seal against a rubber gasket to help prevent air and water leakage and be equipped to permit ease and safety during servicing.
4. Interior cabinet surfaces shall be sheet metal lined or insulated with flexible fire-retardant material, coated on the air side.
5. Unit shall have a factory-installed sloped condensate drain connection made from an aluminized steel or optional stainless steel.
6. Equipped with lifting lugs to facilitate overhead rigging.
7. Filters shall be accessible through a hinged access panel without requiring any special tools.

C. Fans:

1. Indoor Evaporator Fans:
   a. Double-width/double-inlet, centrifugal, belt driven, forward-curved type with single outlet discharge.
   b. Fan shaft bearings shall be of the pillow-block type with positive locking collar and lubrication provisions.

c. Statically and dynamically balanced.

d. Evaporator fan shaft bearings shall have a life of 200,000 hours at design operating conditions in accordance with ANSI B3.15.

e. Solid fan shaft construction for size 020-050 units and two-piece solid fan shaft construction on the size 060 unit.

2. Condenser Fans:

a. Fans shall be direct-driven propeller type only, with corrosion-resistant blades riveted to corrosion resistant steel supports for all size 020-050 units and the size 060 unit with optional condenser coil. Size 060 units with the microchannel condenser coil shall have a direct driven, 9-blade airfoil cross section, reinforced polymer construction, and shrouded-axial type fans with inherent corrosion resistance.

b. Fans discharge air vertically upward and are protected by PVC coated steel wire safety guards.

c. Statically and dynamically balanced.

3. Fan Drive for SAV™ (Staged Air Volume) Units:

Staged air volume units shall be equipped with variable frequency drive (VFD) inverter. The VFD shall control motor speed to user-configurable speeds. High speed shall be a percentage of 60 Hz, and shall be user configurable. The range of adjustment for high speed shall be between 50 and 100% of 60 Hz. Low speed shall be a percentage of 60 Hz, and shall be user configurable. The range of adjustment for low speed shall be between 33 and 67% of 60 Hz. The control shall allow user-configurable fan speeds for cooling and heating modes. The VFD shall be factory-mounted, wired, and tested. The variable speed drive shall include the following features.

a. Full digital control with direct control from the unit *Comfort*Link controls.

b. Insulated gate bi-polar transistors (IGBT) used to produce the output pulse width modulated (PWM) waveform, allowing for quiet motor operation.

c. Inverters capable of operation at a frequency of 8 kHz so no acoustic noise shall be produced by the motor.

d. Critical frequency avoidance.

e. Self diagnostics.

f. On-board storage of unit manufacturer's customer user settings, retrievable from the keypad.

g. RS485 communications capability.

h. Electronic thermal overload protection.

i. 5% swinging chokes for harmonic reduction and improved power factor.

j. All printed circuit boards shall be conformal coated.

k. Shall, through ABB, qualify for a 24-month warranty from date of commissioning or 30 months from date of sale, whichever comes first.

D. Compressors:

1. Fully hermetic, scroll type compressors with overload protection and short cycle protection with minimum on and off timers.

2. Factory rubber-in-shear mounted for vibration isolation.

3. Reverse rotation protection capability.

4. Crankcase heaters shall only be activated during compressor off mode.

E. Coils:

1. Standard evaporator coil shall have aluminum plate fins mechanically bonded to seamless internally grooved copper tubes with all joints brazed.

2. Standard condenser coil shall be microchannel design. The coil shall have a series of flat tubes containing a series of multiple, parallel flow microchannels layered between the refrigerant manifolds. Microchannel coils shall consist of a two-pass arrangement. Coil construction shall consist of aluminum alloys for the fins, tubes, and manifolds.

3. Coils shall be leak tested at 150 psig and pressure tested at 650 psig.

4. Optional condenser coil shall have aluminum plate fins mechanically bonded to seamless internally grooved copper tubes with all joints brazed.

5. Optional pre-coated aluminum-fin coils shall have a durable epoxy-phenolic coating to provide protection in mildly corrosive coastal environments. Coating shall be applied to the aluminum fin stock prior to the fin stamping process to create an inert barrier between the aluminum fin and copper tube. Epoxy-phenolic barrier shall minimize galvanic action between dissimilar metals.

6. Copper-fin coils shall be constructed of copper fins mechanically bonded to copper tubes and copper tube sheets. Galvanized steel tube sheets shall not be acceptable. A polymer strip shall prevent coil assembly from contacting the sheet metal coil pan to minimize potential for galvanic corrosion between coil and pan. All copper construction shall provide protection in moderate coastal environments.

7. E-coated coils shall have a flexible epoxy polymer coating uniformly applied to all coil surface areas without material bridging between fins. Coating process shall ensure complete coil encapsulation. Color shall be high gloss black with gloss — 60 deg of 65 to 90% per

ASTM D523-89. Uniform dry film thickness from 0.8 to 1.2 mil on all surface areas including fin edges. Superior hardness characteristics of 2H per ASTM D3363-92A and cross-hatch adhesion of 4B-5B per ASTM D3359-93. Impact resistance shall be up to 160 in./lb (ASTM D2794-93). Humidity and water immersion resistance shall be up to minimum 1000 and 250 hours respectively (ASTM D2247-92 and ASTM D870-92). Corrosion durability shall be confirmed through testing to be no less than 6000 hours salt spray per ASTM B117-90. Coil construction shall be aluminum fins mechanically bonded to copper tubes.

F. Gas Heating Section (48 Series Only):
   1. Induced-draft combustion type with energy-saving direct spark ignition systems and redundant main gas valves.
   2. The heat exchanger shall be of the tubular section type constructed of a minimum of 20-gage steel coated with a nominal 1.2 mil aluminum-silicone alloy for corrosion resistance. Optional stainless steel heat exchangers shall be available.
   3. Burners shall be of the in-shot type constructed of aluminum coated steel.
   4. All gas piping shall enter the unit cabinet at a single location.
   5. Induced Draft Fans:
      a. Direct-driven, single inlet, forward-curved centrifugal type.
      b. Statically and dynamically balanced.
      c. Made from steel with a corrosion-resistant finish.
   6. High-corrosion areas such as flue gas collection and exhaust areas shall be lined with corrosion resistant material.

G. Refrigerant Components:

   Unit shall be equipped with dual refrigerant circuits, each containing:
   1. Solid core filter drier.
   2. Thermostatic expansion valve.
   3. Fusible plug.

H. Filter Section:

   Standard filter section shall be supplied with 2-in. thick disposable fiberglass filters.

I. Controls and Safeties:
   1. Unit *Comfort*Link Controls:
      a. Scrolling marquee display.
      b. CCN (Carrier Comfort Network®) capable.
      c. Unit control with standard suction pressure and condensing pressure transducers.
      d. Shall provide a minimum 5°F temperature difference between cooling and heating set points to meet ASHRAE 90.1 energy standard.
      e. Shall provide and display a current alarm list and an alarm history list.
      f. Automatic compressor lead/lag control.
      g. Service run test capability.
      h. Shall accept input from a CO_2 sensor (both indoor and outdoor).
      i. Configurable alarm light shall be provided which activates when certain types of alarms occur.
      j. Compressor minimum run time (3 minutes) and minimum off time (3 minutes) are provided.
      k. Service diagnostic mode.
      l. Optional integrated economizer control or two-position self-closing adjustable outside air damper.
      m. Minimum of 3 capacity stages of mechanical capacity control (excluding hot gas bypass) controlled by the following method:

         A control algorithm to maintain either high-cool or low-cool supply air temperature set point. Cooling mode (off, low, or high) to be determined from space temperature sensor or standard 2-stage mechanical thermostat input.
      n. Optional minimum load valve for additional capacity stage.
      o. Unit shall be complete with self-contained low voltage control circuit.
      p. Control of evaporator leaving air temperature through compressor and economizer control.
   2. Safeties:
      a. Unit shall incorporate a solid-state compressor lockout which provides optional reset capability at the space thermostat should any of the following safety devices trip and shut off compressor:
         1.) Compressor lockout protection provided for either internal or external overload.
         2.) Low-pressure protection.
         3.) Freeze protection (evaporator coil).
         4.) High-pressure protection (high pressure switch or internal).
         5.) Compressor reverse rotation protection.
         6.) Loss-of-charge protection.
         7.) Welded contactor protection.
      b. Supply-air sensor shall be located in the unit and should be used for economizer control and compressor stage control.
      c. Induced draft heating section (48 Series) shall be provided with the following minimum protections:
         1.) High-temperature limit switch.
         2.) Induced-draft motor speed sensor.
         3.) Flame rollout switch.
         4.) Flame proving controls.

5.) Redundant gas valve.

J. Operating Characteristics:

1. Unit shall be capable of starting and running at 115°F ambient outdoor temperature per maximum load criteria of AHRI Standard 340/360.
2. Unit with standard controls will operate in cooling down to an outdoor ambient temperature of 32°F.
3. Unit shall be provided with fan time delay to help prevent cold air delivery.

K. Electrical Requirements:

All unit power wiring shall enter unit cabinet at a single location.

L. Motors:

1. Compressor motors shall be cooled by refrigerant gas passing through motor windings and shall have either internal line break thermal and current overload protection or external current overload modules with compressor temperature sensors.
2. All condenser-fan motors shall be totally enclosed 3-phase type with permanently lubricated ball bearings, class F insulation and internal, automatic-reset thermal overload protection or manual reset calibrated circuit breakers.
3. All indoor fan and power exhaust motors 5 hp and larger shall meet the minimum efficiency requirements as established by the Energy Independence and Security Act (EISA) of 2007.

M. Special Features:

Certain features are not applicable when the features designated * are specified. For assistance in amending the specifications, contact your local Carrier Sales Office.

1. Variable Capacity Compressor:

   A variable capacity compressor shall be available for constant volume, staged air volume, and variable air volume configurations. The *Comfort*Link control system shall be capable of unloading this compressor in an infinite number of steps from 100% of compressor capacity down to 50% of compressor capacity.

2. Humidi-MiZer® Adaptive Dehumidification:

   The Humidi-MiZer dehumidification system shall be factory installed with an e-coated reheat coil and shall provide greater dehumidification of the occupied space by using two modes of dehumidification instead of the normal design cooling mode of the unit:

   a. Subcooling mode shall further subcool the hot liquid refrigerant leaving the condenser coil when both temperature and humidity in the space are not satisfied.

   b. Hot gas reheat mode shall mix a portion of the hot gas from the discharge of the compressor with the hot liquid refrigerant leaving the condenser coil to create a two-phase heat transfer in the system, resulting in a neutral leaving-air temperature.

   c. The system shall be equipped with modulating control valves to provide precise leaving-air temperature control. On-off, cycling type control shall not be acceptable.

3. Integrated Ultra Low Leak Economizer:

   a. Economizer shall meet the requirements of ASHRAE 90.1 (latest revision) and California Energy Commission Title 24.

   b. Economizer shall be furnished and installed complete with recirculated air dampers, outdoor air dampers, and controls.

   c. All dampers shall be ultra-low leakage type with blade and edge seals. Dampers shall be 1A certified and exhibit a maximum leakage rate of 3 cfm per square foot of area at 1 in. wg pressure differential when tested per AMCA (Air Movement and Control Association) Std 511.

   d. Dampers shall continue to operate as intended after 100,000 cycles when tested in accordance with Section 8, UL (Underwriters Laboratories) standard 555S.

   e. Actuator shall have a spring return feature which closes the outdoor air dampers upon a power interruption or unit shutdown. Actuators shall be of the communicating type and capable of internal diagnostics.

   f. Economizer shall be capable of introducing up to 100% outdoor air for ventilation or free cooling.

   g. Economizer outdoor air hoods shall be constructed of pre-painted steel.

4. Barometric Relief Damper Package:

   a. Package shall include damper, seals, hardware, and hoods to relieve excess internal pressure.

   b. Damper shall close due to gravity upon unit shutdown.

5. Power Exhaust:

   Package shall include a multiple exhaust fan (centrifugal style) fan, 1 Hp 208-230, 460 v direct-drive motor, and damper for vertical flow units with economizer to control over-pressurization of building. Control shall be through *Comfort*Link controls based on damper position or through an optional building pressure sensor. On size 020-050 units, 4 stages of control shall be available. On size 060 units, 6 stages of control shall be available.

6. Thermostats and Subbases:

   To provide staged heating and cooling in addition to automatic (or manual) changeover and fan control.

7. Electronic Programmable Thermostat:

   Capable of using deluxe full-featured electronic thermostat.

8. Liquefied Propane Conversion Kit (48 Series):

   Kit shall contain all the necessary hardware and instructions to convert a standard natural gas unit for use with liquefied propane gas.

9. Convenience Outlet:

   Shall be factory installed and internally mounted with an externally accessible 115-v, 15 amp. GFI (Ground Fault Interrupter), female receptacle with hinged cover. A step-down transformer and overload protection shall be included so no additional wiring is necessary unless the field-wired outlet has been requested. When applied with a unit-mounted disconnect, the outlet shall be wired to the load side of the disconnect so the outlet will shut off with the disconnect.

10. Non-Fused Disconnect Switch:

    Shall be factory installed, internally mounted, and UL approved. Non-fused switch shall provide unit power shutoff. Shall be accessible from outside the unit and shall provide power-off lockout capability.

11. Electric Heater (50 Series Units Only):

    Electric resistance heaters shall be factory installed, nichrome element type, open wire coils with 0.29 in. inside diameter, insulated with ceramic bushings, and shall include operating and safety controls. Coil ends are staked and welded to terminal screw slots.

12. Hail Guard, Condenser Coil Grille:

    Shall protect the condenser coil from hail, flying debris, and damage by large objects without increasing unit clearances.

13. CO_2 Sensor:

    The CO_2 sensor shall have the ability to monitor CO_2 levels and relay information to the controller. The controller will use CO_2 level information to modulate the economizer and provide demand controlled ventilation. The sensor shall be available as a field-installed or factory-installed return air sensor or a remote space sensor.

14. Return Air Smoke Detector:

    The smoke detector shall send input to the controller to shut down the unit in case smoke is detected. The smoke detector shall be factory installed in the return air section or shall be available as a field-installed accessory.

15. Filter Status:

    The filter status switch shall be a pressure differential switch and will indicate a dirty filter. The switch shall be available as field or factory installed.

16. Humidity Sensor:

    A humidity sensor will allow for outside air enthalpy changeover control using the standard outside air dry bulb sensor and the accessory humidity sensor. When both an outside and return air humidity sensor are used, differential enthalpy changeover can be supported.

17. Two-Position Damper:

    A two-position damper shall admit up to 25% outdoor air during fan operation and shall close when the fan is off. The damper position shall be mechanically adjustable.

18. 4-Inch Filters:

    Optional filter section shall be supplied with 4-in. thick MERV (Minimum Efficiency Reporting Value) 7 pleated fiberglass filters.

19. Control Expansion Module (CEM):

    Shall provide the following additional optional features:

    a. Remote set point
    b. Demand limit control
    c. Remote economizer position
    d. Fire and smoke control override control
    e. Remote sensor monitoring
    f. Fan status switch monitoring

20. Staged Gas Heat (48A2,A4 only):

    The control shall have the option for control of the gas heat to a discharge air temperature by sequencing on the gas cells to provide up to 11 stages of capacity. The control shall be integrated directly into the main unit controls and shall include leaving air temperature sensors to ensure that high temperatures do not occur during the operation of the staged gas heat.

21. Navigator™ Display Module:

    The Navigator display module shall be a portable hand-held display module with a minimum of 4 lines and 20 characters per line, of clear English, Spanish, Portuguese, or French language. Display menus shall provide clear language descriptions of all menu items, operating modes, configuration points, and alarm diagnostics. Reference to factory codes shall not be accepted. An industrial grade coiled extension cord shall allow the display module to be moved around the chiller. Magnets shall hold the display module to any sheet metal panel to allow hands-free operation. Display module shall have NEMA (National Electrical Manufacturers Association) 4x housing suitable for use in outdoor environments. Display shall have back light and contrast adjustment for easy viewing in bright sunlight or night conditions. The display module shall have raised surface buttons with positive tactile response.

22. BACnet[1] Communication Option:

    Shall provide factory-installed communication capability with a BACnet MS/TP network. Allows integration with i-Vu® Open Control System or a BACnet Building Automation System.

23. Modbus[2] Protocol Translator:

    A controller-based accessory module shall provide CCN to MODBUS Remote Terminal Unit (RTU) protocol conversion.

24. LonWorks[3] Protocol Translator:

    A controller-based accessory module shall provide CCN to LON FT-10A ANSI/EIA-709.1 protocol conversion.

25. Full Perimeter Roof Curbs (Horizontal and Vertical):

    Shall be formed of 14-gage galvanized steel with wood nailer strip and shall be capable of supporting entire unit weight.

26. Security Grille (48/50A060 Unit with MCHX [microchannel heat exchanger] Only):

    Factory-installed grille shall limit access to compressor and condenser coil area to authorized personnel only.

27. Double Wall Option:

    Unit cabinet shall have double wall construction featuring flexible fire retardant fiberglass insulation sandwiched between pre-painted exterior panels and galvanized steel inner panels.

28. Low Outdoor Sound Accessory:

    Field-installed accessory, consisting of compressor sound blankets which are used to mitigate the level of outdoor sound. Available in both single and tandem arrangements.

29. Low Outdoor Sound Condenser Fans:

    Low sound condenser fan system shall be provided to reduce outdoor sound levels.

30. Low Ambient Greenspeed® Control Option;

    a. This factory-installed option shall regulate outdoor fan motor speeds in response to the saturated condensing temperature of the refrigeration circuits and local ambient conditions.

    b. The control shall be capable of operating the rooftop unit with outdoor temperature at –20°F.

    c. Fans shall be direct-driven shrouded-axial propeller type fans only, with 9-blade Aero-Acoustic™ airfoil cross section, reinforced polymer construction blades bolted to corrosion resistant steel supports for all size 020-050 units and the size 060 unit with optional condenser coil.

    d. Fans discharge air vertically upward and are protected by PVC coated steel wire safety guards.

    e. Fans are statically and dynamically balanced.

    f. The condenser fan motors will be VFD driven.

    g. Compressor blankets will be applied to mitigate the level of outdoor sound on all refrigerant compressors. They shall be weather resistant are applied in both single and tandem arrangements.

    h. Unit efficiency is maximized by monitoring the refrigerant system and ambient conditions and controlling condenser fan performance.

31. Phase Loss Protection:

    If the phases of the electric supply are out of sequence, or if one phase is missing, the contacts will never close. If a phase is lost while the phase monitor is energized, the contacts will open immediately and will remain open until the error is corrected.

---

1. BACnet is a registered trademark of ASHRAE (American Society of Heating, Refrigerating, and Air-Conditioning Engineers).
2. Modbus is a registered trademark of Schneider Electric.
3. LonWorks is a registered trademark of Echelon Corporation.

Packaged Rooftop Cooling Unit and Packaged Rooftop Cooling Unit with Gas Heat — Variable Air Volume Application

HVAC Guide Specifications — Section 48/50A3,A5,A7,A9

Size Range: **20 to 60 Tons, Nominal (Cooling)**

Carrier Model Number: **48A3, 48A5, 48A7, 48A9, 50A3, 50A5, 50A7, 50A9**

Part 1 — General

1.01 SYSTEM DESCRIPTION

Outdoor roof curb or slab mounted, electronically controlled heating and cooling unit utilizing hermetic scroll compressors with crankcase heaters for cooling duty and gas heat or electric heat. Units shall discharge supply and return air vertically or horizontally as shown on contract drawings. EERs (Energy Efficiency Ratios) shall meet requirements of ASHRAE (American Society of Heating, Refrigeration, and Air-Conditioning Engineers) Standard 90.1-2013.

1.02 QUALITY ASSURANCE

A. Unit shall be rated in accordance with AHRI (Air-Conditioning, Heating, and Refrigeration Institute) Standard 340/360, latest edition.

B. Unit shall be designed to conform to ANSI/ASHRAE 15 (latest edition), ASHRAE 62, and UL (Underwriters Laboratories) Standard 1995.

C. Unit shall be listed by ETL and ETL, Canada as a total package.

D. The 48A3,A5,A7,A9 units shall be designed to conform with ANSI (American National Standards Institute) Standard Z21.47 (U.S.A.) / CSA (Canadian Standards Association) Standard 2.3, Gas-Fired Central Furnaces.

E. Roof curb shall be designed to NRCA (National Roofing Contractors Association) criteria per Bulletin B-1986.

F. Insulation and adhesive shall meet NFPA (National Fire Protection Association) 90A requirements for flame spread and smoke generation.

G. The management system governing the manufacture of this product is ISO (International Organization for Standardization) 9001:2008 certified.

1.03 DELIVERY, STORAGE AND HANDLING

Unit shall be stored and handled per manufacturer's recommendations.

Part 2 — Products

2.01 EQUIPMENT

A. General:

Factory-assembled, single-piece heating and cooling unit. Contained within the unit enclosure shall be all factory wiring, piping, refrigerant charge (R-410A), operating oil charge, dual refrigerant circuits, microprocessor-based control system and associated hardware, and all special features required prior to field start-up.

B. Unit Cabinet:

1. Constructed of galvanized steel, bonderized and precoated with a baked enamel finish.
   a. Top cover shall be 18-gage sheet metal with 0.75-in. thick, 1.5-lb density, fiberglass insulation.
   b. Access panels and doors shall be 20-gage sheet metal with 0.5-in. thick, 1.5-lb density, fiberglass insulation.
   c. Corner and center posts shall be 16-gage galvanized steel.
   d. Basepans in the heating and return air sections shall be 16-gage galvanized steel.
   e. Basepans in the condenser section shall be 16-gage galvanized steel.
   f. Compressor rail shall be 12-gage galvanized steel.
   g. Condensate pan shall be 16-gage aluminized steel.
   h. Air baffles shall be 18-gage galvanized steel with 0.5-in. thick, 1.5-lb density, fiberglass insulation.
   i. Base rail shall be 14-gage galvanized steel.
   j. Fan deck (indoor and outdoor section) shall be 16-gage galvanized steel.
2. Unit casing shall be capable of withstanding 500-hour salt spray exposure per ASTM (American Society for Testing and Materials) B117 (scribed specimen).
3. Sides shall have person-sized insulated hinged access doors for easy access to the control box and other areas requiring servicing. Each door shall seal against a rubber gasket to help prevent air and water leakage and be equipped to permit ease and safety during servicing.
4. Interior cabinet surfaces shall be sheet metal lined or insulated with flexible fire-retardant material, coated on the air side.
5. Unit shall have a factory-installed sloped condensate drain connection made from an aluminized steel or optional stainless steel.
6. Equipped with lifting lugs to facilitate overhead rigging.
7. Filters shall be accessible through a hinged access panel without requiring any special tools.

C. Fans:

1. Indoor Evaporator Fans:
   a. Double-width/double-inlet, centrifugal, belt driven, forward-curved type with single outlet discharge.
   b. Fan shaft bearings shall be of the pillow-block type with positive locking collar and lubrication provisions.

c. Statically and dynamically balanced.

d. Evaporator fan shaft bearings shall have a life of 200,000 hours at design operating conditions in accordance with ANSI B3.15.

e. Solid fan shaft construction for size 020-050 units and two-piece solid fan shaft construction on the size 060 unit.

2. Condenser Fans:

a. Fans shall be direct-driven propeller type only, with corrosion-resistant blades riveted to corrosion-resistant steel supports for all size 020-050 units and the size 060 unit with optional condenser coil. Size 060 units with the microchannel condenser coil shall have a direct driven, 9-blade airfoil cross section, reinforced polymer construction, and shrouded-axial type fans with inherent corrosion resistance.

b. Fans discharge air vertically upward and are protected by PVC coated steel wire safety guards.

c. Statically and dynamically balanced.

3. Supply Fan Drive:

Unit shall be equipped with variable frequency drive (VFD) inverter. The VFD shall be installed inside the unit cabinet and shall be factory mounted, wired, and tested. The VFD shall control motor speed to maintain set point static pressure at the sensor tube location of the supply duct pressure transducer (transducer is factory provided and installed; sensor tube must be field routed). The control system may be field-adjusted to maintain supply duct static pressure set points from 0 in. wg to 3.5 in. wg.

The variable frequency drive shall include the following features:

a. Full digital control with direct control from the unit *Comfort*Link controls.

b. Insulated Gate Bi-Polar Transistors (IGBT) used to produce the output pulse width modulated (PWM) waveform, allowing for quiet motor operation.

c. Inverters capable of operation at a frequency of 8 kHz, so no acoustic noise shall be produced by the motor.

d. Self diagnostics.

e. Personal lockout code for additional security.

f. Critical frequency avoidance.

g. RS485 capability standard.

h. Electronic thermal overload protection.

i. 5% swinging chokes for harmonic reduction and improved power factor.

j. All printed circuit boards shall be conformal coated.

k. Shall, through ABB, qualify for a 24-month warranty from date of commissioning or 30 months from date of sale, whichever comes first.

D. Compressors:

1. Fully hermetic, scroll type compressors with overload protection and short cycle protection with minimum on and off timers.

2. Factory rubber-in-shear mounted for vibration isolation.

3. Reverse rotation protection capability.

4. Crankcase heaters shall only be activated during compressor off mode.

E. Coils:

1. Standard evaporator coil shall have aluminum plate fins mechanically bonded to seamless internally grooved copper tubes with all joints brazed.

2. Standard condenser coil shall be microchannel design. The coil shall have a series of flat tubes containing a series of multiple, parallel flow microchannels layered between the refrigerant manifolds. Microchannel coils shall consist of a two-pass arrangement. Coil construction shall consist of aluminum alloys for the fins, tubes, and manifolds.

3. Coils shall be leak tested at 150 psig and pressure tested at 650 psig.

4. Optional condenser coil shall have aluminum plate fins mechanically bonded to seamless internally grooved copper tubes with all joints brazed.

5. Optional pre-coated aluminum-fin coils shall have a durable epoxy-phenolic coating to provide protection in mildly corrosive coastal environments. Coating shall be applied to the aluminum fin stock prior to the fin stamping process to create an inert barrier between the aluminum fin and copper tube. Epoxy-phenolic barrier shall minimize galvanic action between dissimilar metals.

6. Copper-fin coils shall be constructed of copper fins mechanically bonded to copper tubes and copper tube sheets. Galvanized steel tube sheets shall not be acceptable. A polymer strip shall prevent coil assembly from contacting the sheet metal coil pan to minimize potential for galvanic corrosion between coil and pan. All copper construction shall provide protection in moderate coastal environments.

7. E-coated coils shall have a flexible epoxy polymer coating uniformly applied to all coil surface areas without material bridging between fins. Coating process shall ensure complete coil encapsulation. Color shall be high gloss black with gloss—60 deg of 65 to 90% per ASTM D523-89. Uniform dry film thickness from 0.8 to 1.2 mil on all surface areas including fin edges. Superior hardness characteristics of 2H per ASTM D3363-92A and cross-hatch adhesion of 4B-5B per ASTM

D3359-93. Impact resistance shall be up to 160 in./lb (ASTM D2794-93). Humidity and water immersion resistance shall be up to minimum 1000 and 250 hours respectively (ASTM D2247-92 and ASTM D870-92). Corrosion durability shall be confirmed through testing to be no less than 6000 hours salt spray per ASTM B117-90. Coil construction shall be aluminum fins mechanically bonded to copper tubes.

F. Gas Heating Section (48 Series Only):
   1. Induced-draft combustion type with energy-saving direct spark ignition systems and redundant main gas valves.
   2. The heat exchanger shall be of the tubular section type constructed of a minimum of 20-gage steel coated with a nominal 1.2 mil aluminum-silicone alloy for corrosion resistance. Optional stainless steel heat exchangers shall be available.
   3. Burners shall be of the in-shot type constructed of aluminum coated steel.
   4. All gas piping shall enter the unit cabinet at a single location.
   5. Induced Draft Fans:
      a. Direct-driven, single inlet, forward-curved centrifugal type.
      b. Statically and dynamically balanced.
      c. Made from steel with a corrosion-resistant finish.
   6. High-corrosion areas such as flue gas collection and exhaust areas shall be lined with corrosion resistant material.

G. Refrigerant Components:

   Unit shall be equipped with dual refrigerant circuits each containing:
   1. Solid core filter drier.
   2. Thermostatic expansion valve.
   3. Fusible plug.

H. Filter Section:

   Standard filter section shall be supplied with 2-in. thick disposable fiberglass filters.

I. Controls and Safeties:
   1. Unit *Comfort*Link Controls:
      a. Scrolling marquee display.
      b. CCN (Carrier Comfort Network®) capable.
      c. Unit control with standard suction pressure and condensing pressure transducers.
      d. Shall provide a 5°F temperature difference between cooling and heating set points to meet ASHRAE 90.1, energy standard.
      e. Shall provide and display a current alarm list and an alarm history list.
      f. Automatic compressor redundancy.
      g. Service run test capability.
      h. Shall accept input from a CO_2 sensor (both indoor and outdoor).
      i. Configurable alarm light shall be provided which activates when certain types of alarms occur.
      j. Compressor minimum run time (3 minutes) and minimum off time (3 minutes) are provided.
      k. Service diagnostic mode.
      l. Optional integrated economizer control or two-position self-closing adjustable outside-air damper.
      m. Minimum of 3 capacity stages of mechanical capacity control (excluding hot gas bypass) controlled with logic to maintain supply air temperature set point.
      n. Optional minimum load valve for additional capacity stage.
      o. Unit shall be complete with self-contained low voltage control circuit.
   2. Safeties:
      a. Unit shall incorporate a solid-state compressor lockout which provides optional reset capability at the space thermostat should any of the following safety devices trip and shut off compressor:
         1.) Compressor lockout protection provided for either internal or external overload.
         2.) Low-pressure protection.
         3.) Freeze protection (evaporator coil).
         4.) High-pressure protection (high pressure switch or internal).
         5.) Compressor reverse rotation protection.
         6.) Loss of charge protection.
         7.) Welded contactor protection.
      b. Supply-air sensor shall be located in the unit and should be used for economizer control and compressor stage control.
      c. Induced draft heating section (48 Series) shall be provided with the following minimum protections:
         1.) High-temperature limit switch.
         2.) Induced-draft motor speed sensor.
         3.) Flame rollout switch.
         4.) Flame proving controls.
         5.) Redundant gas valve.

J. Operating Characteristics:
   1. Unit shall be capable of starting and running at 115°F ambient outdoor temperature per maximum load criteria of AHRI Standard 340/360.
   2. Unit with standard controls will operate in cooling down to an outdoor ambient temperature of 32°F.
   3. Unit shall be provided with fan time delay to prevent cold air delivery.

K. Electrical Requirements:

All unit power wiring shall enter unit cabinet at a single location.

L. Motors:

1. Compressor motors shall be cooled by refrigerant gas passing through motor windings and shall have either internal line break thermal and current overload protection or external current overload modules with compressor temperature sensors.
2. All condenser-fan motors shall be totally enclosed 3-phase type with permanently lubricated ball bearings, class F insulation and internal, automatic-reset thermal overload protection or manual reset calibrated circuit breakers.
3. All indoor fan and power exhaust motors 5 hp and larger shall meet the minimum efficiency requirements as established by the Energy Independence and Security Act (EISA) of 2007.

M. Special Features:

Certain features are not applicable when the features designated * are specified. For assistance in amending the specifications, contact your local Carrier Sales Office.

1. Variable Capacity Compressor:

   A variable capacity compressor shall be available for constant volume, staged air volume, and variable air volume configurations. The *Comfort*Link control system shall be capable of unloading this compressor in an infinite number of steps from 100% of compressor capacity down to 50% of compressor capacity.

2. Humidi-MiZer® Adaptive Dehumidification:

   The Humidi-MiZer dehumidification system shall be factory installed with an e-coated reheat coil and shall provide greater dehumidification of the occupied space by using two modes of dehumidification instead of the normal design cooling mode of the unit:

   a. Subcooling mode shall further subcool the hot liquid refrigerant leaving the condenser coil when both temperature and humidity in the space are not satisfied.

   b. Hot gas reheat mode shall mix a portion of the hot gas from the discharge of the compressor with the hot liquid refrigerant leaving the condenser coil to create a two-phase heat transfer in the system, resulting in a neutral leaving-air temperature.

   c. The system shall be equipped with modulating control valves to provide precise leaving air temperature control. On-off, cycling type control shall not be acceptable.

3. Ultra Low Leak Economizer:

   Dry bulb, differential dry bulb temperature, optional enthalpy, or optional differential enthalpy controlled integrated type consisting of dampers, actuator, and linkages in conjunction with control system to provide primary cooling using outdoor air, conditions permitting, supplemented with mechanical cooling when necessary.

   a. Economizer shall meet the requirements of the California Energy Commission Title 24 economizer requirements.

   b. Dampers shall be a gear-driven ultra low leakage type with blade and edge seals. Dampers shall exhibit a maximum leakage rate of 3 cfm per square foot of area at 1 in. wg pressure differential when tested in accordance with AMCA (Air Movement and Control Association) Standard 500.

4. Barometric Relief Damper Package:

   a. Package shall include damper, seals, hardware, and hoods to relieve excess internal pressure.

   b. Damper shall close due to gravity upon unit shutdown.

5. Power Exhaust:

   Package shall include a multiple exhaust fan (centrifugal style) fan, 1 Hp 208-230, 460 v direct-drive motor, and damper for vertical flow units with economizer to control over-pressurization of building. Control shall be through *Comfort*Link controls based on optional building pressure sensor. On size 020-050 units, 4 stages of control shall be available. On size 060 units, 6 stages of control shall be available.

6. Liquefied Propane Conversion Kit (48 Series):

   Kit shall contain all the necessary hardware and instructions to convert a standard natural gas unit for use with liquefied propane gas.

7. Convenience Outlet:

   Shall be factory installed and internally mounted with an externally accessible 115-v, 15 amp GFI (ground fault interrupter), female receptacle with hinged cover. A step-down transformer and overload protection shall be included so no additional wiring is necessary unless the field-wired outlet has been requested. When applied with a unit-mounted disconnect, the outlet shall be wired to the load side of the disconnect so the outlet will shut off with the disconnect.

8. Non-Fused Disconnect Switch:

   Shall be factory installed, internally mounted, and UL approved. Non-fused switch shall provide unit power shutoff. Shall be accessible from outside the unit and shall provide power off lockout capability.

9. Electric Heater (50 Series Units Only):

   Electric resistance heaters shall be factory-installed, nichrome element type, open wire coils with 0.29 in. inside diameter, insulated with ceramic bushings, and include operating

and safety controls. Coil ends are staked and welded to terminal screw slots.

10. Hail Guard, Condenser Coil Grille:

    Shall protect the condenser coil from hail, flying debris, and damage by large objects without increasing unit clearances.

11. CO_2 Sensor:

    The CO_2 sensor shall have the ability to monitor CO_2 levels and relay information to the controller. The controller will use CO_2 level information to modulate the economizer and provide demand controlled ventilation. The sensor shall be available as a field-installed or factory-installed return air sensor or a remote space sensor.

12. Return Air Smoke Detector:

    The smoke detector shall send input to the controller to shut down the unit in case smoke is detected. The smoke detector shall be factory installed in the return air section or shall be available as a field-installed accessory.

13. Filter Status:

    The filter status switch shall be a pressure differential switch and will indicate a dirty filter. The switch shall be available as field or factory installed.

14. Humidity Sensor:

    A humidity sensor will allow for outside air enthalpy changeover control using the standard outside air dry bulb sensor and the accessory humidity sensor. When both an outside and return air humidity sensor are used, differential enthalpy changeover can be supported.

15. Two-Position Damper:

    A two-position damper shall admit up to 25% outdoor air during fan operation and shall close when the fan is off. The damper position shall be mechanically adjustable.

16. 4-Inch Filters:

    Optional filter section shall be supplied with 4-in. thick MERV (Minimum Efficiency Reporting Value) 7 pleated fiberglass filters.

17. Control Expansion Module (CEM):

    Shall provide the following additional optional features:

    a. Remote set point.
    b. Demand limit control.
    c. Remote economizer position.
    d. Fire and smoke control override control.
    e. Remote sensor monitoring.
    f. Fan status switch monitoring.

18. Bypass for Supply Fan VFD (Variable Frequency Drive):

    Units may be equipped with an optional manual bypass switch which allows the supply fan VFD to be electrically bypassed.

19. BACnet[1] Communication Option:

    Shall provide factory-installed communication capability with a BACnet MS/TP network. Allows integration with i-Vu® Open Control System or a BACnet Building Automation System.

20. Modbus[2] Protocol Translator:

    A controller-based module shall provide CCN to MODBUS Remote Terminal Unit (RTU) protocol conversion.

21. LonWorks[3] Protocol Translator:

    A controller-based module shall provide CCN to LON FT-10A ANSI/EIA-709.1 protocol conversion.

22. Navigator™ Display Module:

    The Navigator display module shall be a portable hand-held display module with a minimum of 4 lines and 20 characters per line, of clear English, Spanish, Portuguese, or French language. Display menus shall provide clear language descriptions of all menu items, operating modes, configuration points and alarm diagnostics. Reference to factory codes shall not be accepted. An industrial grade coiled extension cord shall allow the display module to be moved around the chiller. Magnets shall hold the display module to any sheet metal panel to allow hands-free operation. Display module shall have NEMA (National Electrical Manufacturers Association) 4x housing suitable for use in outdoor environments. Display shall have back light and contrast adjustment for easy viewing in bright sunlight or night conditions. The display module shall have raised surface buttons with positive tactile response.

23. Staged Gas Heat (48A3,A5 only):

    The control shall have the option for control of the gas heat to a discharge air temperature by sequencing on the gas cells to provide up to 11 stages of capacity. The control shall be integrated directly into the main unit controls and shall include leaving air temperature sensors to ensure that high temperatures do not occur during the operation of the staged gas heat.

---

1. BACnet is a registered trademark of ASHRAE (American Society of Heating, Refrigerating, and Air-Conditioning Engineers).
2. Modbus is a registered trademark of Schneider Electric.
3. LonWorks is a registered trademark of Echelon Corporation.

24. Full Perimeter Roof Curbs (Horizontal and Vertical):

    Shall be formed of 14-gage galvanized steel with wood nailer strip and shall be capable of supporting entire unit weight.

25. Security Grille (48/50A060 Unit with MCHX [microchannel heat exchanger] Only):

    Factory-installed grille shall limit access to compressor and condenser coil area to authorized personnel only.

26. Double Wall Option:

    Unit cabinet shall have double wall construction featuring flexible fire retardant fiberglass insulation sandwiched between pre-painted exterior panels and galvanized steel inner panels.

27. Low Outdoor Sound Accessory:

    Field-installed accessory, consisting of compressor sound blankets which are used to mitigate the level of outdoor sound. Available in both single and tandem arrangements.

28. Low Outdoor Sound Condenser Fans:

    Low sound condenser fan system shall be provided to reduce outdoor sound levels.

29. Low Ambient Greenspeed® Control Option;

    a. This factory-installed option shall regulate outdoor fan motor speeds in response to the saturated condensing temperature of the refrigeration circuits and local ambient conditions.

    b. The control shall be capable of operating the rooftop unit with outdoor temperature at –20°F.

    c. Fans shall be direct-driven shrouded-axial propeller type fans only, with 9-blade Aero-Acoustic™ airfoil cross section, reinforced polymer construction blades bolted to corrosion resistant steel supports for all size 020-050 units and the size 060 unit with optional condenser coil.

    d. Fans discharge air vertically upward and are protected by PVC coated steel wire safety guards.

    e. Fans are statically and dynamically balanced.

    f. The condenser fan motors will be VFD driven.

    g. Compressor blankets will be applied to mitigate the level of outdoor sound on all refrigerant compressors. They shall be weather resistant are applied in both single and tandem arrangements.

    h. Unit efficiency is maximized by monitoring the refrigerant system and ambient conditions and controlling condenser fan performance.

30. Phase Loss Protection:

    If the phases of the electric supply are out of sequence, or if one phase is missing, the contacts will never close. If a phase is lost while the phase monitor is energized, the contacts will open immediately and will remain open until the error is corrected.

Manufacturer reserves the right to discontinue, or change at any time, specifications or designs without notice and without incurring obligations.

Pg 120 Catalog No. 04-52480061-01 Printed in U.S.A. Form 48/50A-19PD
Replaces: 48/50A-18PD