FUSCOE ENGINEERING

PRELIMINARY WATER QUALITY MANAGEMENT PLAN (PWQMP)

RELATED BRISTOL

FUSCOE ENGINEERING

PRELIMINARY WATER QUALITY MANAGEMENT PLAN (PWQMP)

RELATED BRISTOL

FUSCOE ENGINEERING

PRELIMINARY WATER QUALITY MANAGEMENT PLAN (PWQMP)

RELATED BRISTOL



FUSCOE ENGINEERING

PRELIMINARY WATER QUALITY MANAGEMENT PLAN (PWQMP) AND CEQA ANALYSIS

RELATED BRISTOL

APN: 412-131-12, 412-131-13, 412-131-14, 412-131-16, 412-131-17, 412-131-22, 412-131-24, 412-131-25 AND 412-131-26

PREPARED FOR
RCR Bristol, LLC

FUSCOE ENGINEERING, INC.
16795 Von Karman, Suite 100
Irvine, California 92606
949.474.1960
www.fuscoe.com

PROJECT MANAGER
Oriana Slasor

DATE PREPARED: October 2022
DATE REVISED: February 2023
DATE REVISED: March 2023

PROJECT NUMBER: [622-015]

full circle thinking®

City of Santa Ana

Priority Project

Preliminary Water Quality Management Plan (PWQMP) & CEQA Analysis

Project Name:

Related Bristol

P0113323

APN: 412-131-12, 412-131-13, 412-131-14, 412-131-16, 412-131-17, 412-131-22, 412-131-24, 412-131-25 AND 412-131-26

Prepared for:

RCR Bristol, LLC
18201 Von Karman Avenue, Suite 900
Irvine, CA, 92612
949.660.7272

Prepared by:

Fuscoe Engineering, Inc.
16795 Von Karman, Suite 100
Irvine, CA 92606
949.474.1960
Oriana Slasor, P.E. RCE #C63451

Date Prepared: 10/3/2022
Date Revise: 2/8/2023
Date Revise: 3/31/2023

Project Owner's Certification			
Planning Application No. (If Applicable)	P0113323	Grading Permit No.	
Tract/Parcel Map and Lot(s) No.	TBD	Building Permit No.	
Address of Project Site and APN (If no address, specify Tract/Parcel Map and Lot Numbers)			APN: 412-131-12, 412-131-13, 412-131-14, 412-131-16, 412-131-17, 412-131-22, 412-131-24, 412-131-25 AND 412-131-26

This Water Quality Management Plan (WQMP) has been prepared for RCR BRISTOL, LLC by Fuscoe Engineering, Inc. The WQMP is intended to comply with the requirements of the County of Orange NPDES Stormwater Program requiring the preparation of the plan.

The undersigned, while it owns the subject property, is responsible for the implementation of the provisions of this plan , including the ongoing operation and maintenance of all best management practices (BMPs), and will ensure that this plan is amended as appropriate to reflect up-to-date conditions on the site consistent with the current Orange County Drainage Area Management Plan (DAMP) and the intent of the non-point source NPDES Permit for Waste Discharge Requirements for the County of Orange, Orange County Flood Control District and the incorporated Cities of Orange County within the Santa Ana Region. Once the undersigned transfers its interest in the property, its successors-in-interest shall bear the aforementioned responsibility to implement and amend the WQMP. An appropriate number of approved and signed copies of this document shall be available on the subject site in perpetuity.

Representation on the Authority of Parties/Signatories. Each person signing this Agreement represents and warrants that he or she is duly authorized and has legal capacity to execute and deliver this Agreement. Each party represents and warrants to the other that the execution and delivery of the Agreement and the performance of such party's obligations hereunder have been duly authorized and that the Agreement is a valid and legal agreement binding on such party and enforceable in accordance with its terms. This agreement is binding on any successors in interest, designees or transferees. Attach proof of authority to execute this agreement.

Owner: Jonathan Shum	
Title	Senior Vice President
Company	RCR BRISTOL, LLC
Address	18201 Von Karman Avenue, Suite 900, Irvine, CA, 92612
Email	jonathan.shum@related.com
Telephone #	949.660.7272

I understand my responsibility to implement the provisions of this WQMP including the ongoing operation and maintenance of the best management practices (BMPs) described herein.			
Owner Signature		Date	

Preparer (Engineer): Oriana Slasor			
Title	Principal	PE Registration #	#C63451
Company	Fuscoe Engineering, Inc.		
Address	16795 Von Karman, Suite 100, Irvine, CA 92606		
Email	oslasor@fuscoe.com		
Telephone #	949.474.1960		
I hereby certify that this Water Quality Management Plan is in compliance with, and meets the requirements set forth in, Order No. R8-2009-0030/NPDES No. CAS618030, of the Santa Ana Regional Water Quality Control Board.			
Preparer Signature	O.Slasor	Date	2/7/2023
Place Stamp Here			

Contents

Page No.

Section I	**Permit(s) and Water Quality Conditions of Approval or Issuance**	**1**
Section II	**Project Description**	**3**
Section III	**Site Description**	**8**
Section IV	**Best Management Practices (BMPs)**	**10**
Section V	**Inspection/Maintenance Responsibility for BMPs**	**24**
Section VI	**BMP Exhibit (Site Plan)**	**25**
Section VII	**Educational Materials**	**26**

Attachments

Attachment A ..... **Supporting Calculations**

Attachment B ..... **Notice of Transfer of Responsibility**

Attachment C ..... **Educational Materials**

Attachment D ..... **BMP Maintenance Supplement / O&M Plan**

Attachment E ..... **Conditions of Approval**

Attachment F ..... **Geotechnical Report**

Attachment G ..... **CEQA Impact Report**

Attachment H ..... **2-yr, 24-hr Hydrology Calculations**

Attachment I ..... **Soil Type Documentation**

EXHIBITS & BMP DETAILS (INCLUDED IN SECTION VI)

- **Vicinity Map**
- **Site Plan**
- **Typical Cross Sections**
- **Modular Wetland Brochure**

Section I Permit(s) and Water Quality Conditions of Approval or Issuance

Provide discretionary or grading/building permit information and water quality conditions of approval, or permit issuance, applied to the project. If conditions are unknown, please request applicable conditions from staff. *Refer to Section 2.1 in the Technical Guidance Document (TGD) available on the OC Planning website (ocplanning.net).*

Project Infomation			
Permit/Application No. (If applicable)	P0113323	Grading or Building Permit No. (If applicable)	PENDING
Address of Project Site (or Tract Map and Lot Number if no address) and APN	APN: 412-131-12, 412-131-13, 412-131-14, 412-131-16, 412-131-17, 412-131-22, 412-131-24, 412-131-25 and 412-131-26		
Water Quality Conditions of Approval or Issuance			
Water Quality Conditions of Approval or Issuance applied to this project. (Please list verbatim.)	Pending – to be provided in Final WQMP		
Conceptual WQMP			
Was a Conceptual Water Quality Management Plan previously approved for this project?	Not Applicable		

Watershed-Based Plan Conditions	
Provide applicable conditions from watershed - based plans including WIHMPs and TMDLS.	Chlordane, DDT, Nutrients, PCBs, Sedimentation, Malathion, Toxicity, Copper, Indicator Bacteria

Section II Project Description

II.1 Project Description

Provide a detailed project description including:

- Project areas;
- Land uses;
- Land cover;
- Design elements;
- A general description not broken down by drainage management areas (DMAs).

Include attributes relevant to determining applicable source controls. *Refer to Section 2.2 in the Technical Guidance Document (TGD) for information that must be included in the project description.*

The proposed Related Bristol project site encompasses approximately 41.13 acres in the City of Santa Ana. The hydrology of the site results in a total of 41.15 acres of drainage area to be accounted for. Within the Drainage Report, the calculations are based on the 41.15 acres total, and the BMPs within this report are sized to match the drainage analysis. The project site is bounded by MacArthur Boulevard to the north, Sunflower Avenue to the south, and Bristol Street to the east. The west side of the site is bordered by Plaza Drive between MacArthur Boulevard and Callen's Common and by existing development between Callen's Common and Sunflower Avenue to the west. A Vicinity Map is included in Section VI.

Under existing conditions, the project site is relatively flat, gently sloping towards the west. The site is developed with approximately 465,063 square feet (sf) of predominately retail and restaurant uses with medical office, financial, and fitness uses. The site includes 3 multi-story buildings and 11 one story buildings with single and multiple tenants. All parking is provided in surface parking areas located throughout the project site. Adjacent land uses include commercial buildings.

The table below summarizes the proposed project.

Description of Proposed Project	
Development Category (From Model WQMP, Table 7.11-2; or -3):	All significant redevelopment projects, where significant redevelopment is defined as the addition or replacement of 5,000 or more square feet of impervious surface on an already developed site. Redevelopment does not include routine maintenance activities that are conducted to maintain original line and grade, hydraulic capacity, original purpose of the

<table>
<tr><td></td><td colspan="4">facility, or emergency redevelopment activity required to protect public health and safety.

-If the redevelopment results in the addition or replacement of less than 50 percent of the impervious area on-site and the existing development was not subject to WQMP requirement, the numeric sizing criteria discussed in Section 7.II-2.0 only applies to the addition or replacement area. If the addition or replacement accounts for 50 percent or more of the impervious area, the Project WQMP requirements apply to the entire development.</td></tr>
<tr><td>Project Area (ft²): 1,791,412</td><td colspan="2">Number of Dwelling Units:
- 3,750 multi-family residential units
- 250-key hotel
- 200 units senior living/continuum of care use</td><td colspan="2">SIC Code: 5999 & 7011</td></tr>
<tr><td rowspan="2">Project Area</td><td colspan="2">Pervious</td><td colspan="2">Impervious</td></tr>
<tr><td>Area
(acres or sq ft)</td><td>Percentage</td><td>Area
(acres or sq ft)</td><td>Percentage</td></tr>
<tr><td>Pre-Project Conditions</td><td>4.11 ac</td><td>10%</td><td>37.02 ac</td><td>90%</td></tr>
<tr><td>Post-Project Conditions</td><td>5.76 ac</td><td>14%</td><td>35.37 ac</td><td>86%</td></tr>
<tr><td>Drainage Patterns/Connections</td><td colspan="4">In the existing condition, approximately the portion of the project that is north of Callen's Commons flows north to the Gardens Channel and the portion south of it flows south to the public storm drain line in Sunflower Avenue which ultimately connects into the Gardens Channel. The northern portion of the site has one discharge point in Plaza Drive that flows north to the storm drain in Macarthur Boulevard. There are two northern discharge points from the site that flow into the storm drain line in Macarthur Boulevard. Two northeast discharge points of the site flow to Bristol Street and then connect into the Gardens Channel. There is a portion of the site north of Callen's Commons that connects into the storm drain line in Plaza Drive that flows south to Sunflower Avenue. There is another point of connection in Plaza Drive from a section including west Callen's Common and south of it. There are two discharge points connecting to the storm drain line in Sunflower Avenue. A southeastern discharge points connects into a storm drain line in Bristol Street which then flows south to the line in Sunflower Avenue which connects to the Garden Channel after flowing east.</td></tr>
</table>

	The project proposes to maintain similar drainage patterns in the existing condition, where half of the project area flows north and the southern portion flows south. In the proposed condition there are three northern flowing discharge points, one from Plaza Drive (Outfall 1), one from Macarthur Boulevard (Outfall 2), and another in Bristol Street (Outfall 3). There are four southern flowing discharge points, including one in Plaza Drive (Outfall 4), two in Sunflower Avenue (Outfall 5 to the west and Outfall 6 to the east of that), and one in Bristol Street (Outfall 7). The project is tributary to the Orange County Flood Control District (OCFCD) Gardens Channel, Facility No. F02. The Gardens Channel is a graded earthen channel from upstream at 1st Street to Alton Avenue. Downstream of Alton Avenue, the channel is a reinforced rectangular concrete section, with a triple-barrel culvert at W. MacArthur Boulevard and S. Bristol Street, in the vicinity of the project site. The Gardens Channel confluences with the Delhi Channel at Sunflower Avenue, east of S. Bristol Street, and continues flowing south toward Upper Newport Bay.

Narrative Project Description: (Use as much space as necessary.)	The approximately 41.13 gross-acre site project site is bordered by MacArthur Boulevard to the north, Sunflower Avenue to the south, and Bristol Street to the east. The west side of the site is bordered by Plaza Drive between MacArthur Boulevard and Callen's Common and by existing development between Callen's Common and Sunflower Avenue to the west. Vehicular access to the project site, which is currently developed as a predominately commercial shopping center, is provided from Bristol Street, Callen's Common, MacArthur Boulevard, Sunflower Avenue, and Plaza Drive. Callen's Common, an existing 1.02-acre private street traverses the project site in an east-west direction and connects Bristol Street to Plaza Drive. MacArthur Boulevard, Sunflower Avenue, Bristol Street, and Plaza Drive have existing sidewalks and ornamental landscaping. Topographically the site is relatively flat, gently sloping towards the west and is developed with approximately 465,063 square feet (sf) of predominately retail and restaurant uses with medical office, financial, and fitness uses. The site includes 3 multi- story buildings and 11 one single story buildings with single and multiple tenants. The Project would demolish the existing shopping center (approximately 465,063 sf) and related infrastructure to allow for development of a mixed-use development with up 3,750 multi-family residential units; 350,000 sf of commercial uses; a 250-key hotel; a senior living/continuum of care use with 200 units; and approximately 13 acres of common open space. Parking would be provided by above- and below-ground parking structures providing shared parking. The proposed project includes food preparation, eating areas, and public spaces.

II.2 Potential Stormwater Pollutants

Determine and list expected stormwater pollutants based on land uses and site activities. *Refer to Section 2.2.2 and Table 2.1 in the Technical Guidance Document (TGD) for guidance.*

Pollutants of Concern			
Pollutant	Check One for each: E=Expected to be of concern N=Not Expected to be of concern		Additional Information and Comments
Suspended-Solid/ Sediment	E ☒	N ☐	303(d) listed
Nutrients	E ☒	N ☐	303(d) listed
Heavy Metals	E ☒	N ☐	303(d) listed
Pathogens (Bacteria/Virus)	E ☒	N ☐	303(d) listed
Pesticides	E ☒	N ☐	303(d) listed
Oil and Grease	E ☐	N ☒	
Toxic Organic Compounds	E ☒	N ☐	303(d) listed
Trash and Debris	E ☐	N ☒	

II.3 Hydrologic Conditions of Concern

Determine if streams located downstream from the project area are potentially susceptible to hydromodification impacts. *Refer to Section 2.2.3.1 in the Technical Guidance Document (TGD) for North Orange County or Section 2.2.3.2 for South Orange County.*

☐ No – Show map

☒ Yes – Describe applicable hydrologic conditions of concern below. *Refer to Section 2.2.3 in the Technical Guidance Document (TGD).*

According to Figure XVI-3a within the Technical Guidance Document, the proposed project falls within an area susceptible to hydromodification impacts. All runoff from the site ultimately drains to the Santa Ana Delhi Channel, then Newport Bay. A copy of Figure XVI-3a is included in Appendix A.

2-YEAR, 24-HOUR STORM SUMMARY				
Condition	Acreage	Tc (min)	Peak Runoff (cfs)	Volume (ac-ft)
Pre-development	41.15	8.85	57.25	5.14
Proposed	41.15	11.40	53.58	5.47
Difference	0	2.55	-3.67	0.33
% Change		28.8%	-6.4%	6.4%

The proposed project will decrease the peak runoff flowrate compared to existing conditions. The results of the hydrology analysis indicate the 2-year time of concentration (Tc) increases 28.8%, the peak runoff flowrate decreases by 6.4%, and the runoff volume increases by 6.4% compared to existing conditions.

$V_{2\text{-year/pre}}$ = 5.14 ac-ft

$V_{2\text{-year/post}}$ = 5.47 ac-ft

$(V_{2\text{-year/post}}) < (V_{2\text{-year/pre}} * 1.05) \rightarrow (5.47 \text{ ac-ft}) < [(5.14*1.05) = 5.40 \text{ ac-ft}] \rightarrow$ **NOT TRUE, HCOC**

The post development runoff volume for the 2-year, 24-hour storm event exceeds that of the pre-development condition by more than 5%. As a result, HCOC's exist for the project.

Due to the HCOC's, the project implements on-site hydromodification controls to reduce the post-development runoff 2-year peak flowrate to no greater than 110% of the pre-development runoff 2-year peak flowrate, per the TGD requirements.

As shown in the table above, the 2-year peak flowrate is decreased by 6.4% in the post-development condition compared to the existing. This demonstrates that the peak matching criterion is satisfied and hydromodification requirements are met.

Please see Attachment H for the 2-yr, 24-hr rational method calculations and unit hydrograph for the existing and proposed conditions.

II.4 Post Development Drainage Characteristics

Describe post development drainage characteristics. *Refer to Section 2.2.4 in the Technical Guidance Document (TGD).*

In the existing condition, approximately the portion of the project that is north of Callen's Commons flows north to the Gardens Channel and the portion south of it flows south to the public storm drain line in Sunflower Avenue which ultimately connects into the Gardens Channel. The northern portion of the site has one discharge point in Plaza Drive that flows north to the storm drain in Macarthur Boulevard. There are two northern discharge points from the site that flow into the storm drain line in Macarthur Boulevard. Two northeast discharge points of the site flow to Bristol Street and then connect into the Gardens Channel. There is a portion of the site north of Callen's Commons that connects into the storm drain line in Plaza Drive that flows south to Sunflower Avenue. There is another point of connection in Plaza Drive from a section including west Callen's Common and south of it. There are two discharge points connecting to the storm drain line in Sunflower Avenue. A southeastern discharge points connects into a storm drain line in Bristol Street which then flows south to the line in Sunflower Avenue which connects to the Garden Channel after flowing east.

The project proposes to maintain similar drainage patterns in the existing condition, where half of the project area flows north and the southern portion flows south.

The proposed Modular Wetland System BMPs will be diverted the Q_{BMP} via either a diversion structure from the main line or a low flow pipe connected to a sump condition catch basin, which will vary per drainage area.

In the proposed condition there are three northern flowing discharge points, one from Plaza Drive (Outfall 1), one from Macarthur Boulevard (Outfall 2), and another in Bristol Street (Outfall 3). There are four southern flowing discharge points, including one in Plaza Drive (Outfall 4), two in Sunflower Avenue (Outfall 5 to the west and Outfall 6 to the east of that), and one in Bristol Street (Outfall 7).

The project is tributary to the Orange County Flood Control District (OCFCD) Gardens Channel, Facility No. F02. The Gardens Channel is a graded earthen channel from upstream at 1st Street to Alton Avenue. Downstream of Alton Avenue, the channel is a reinforced rectangular concrete section, with a triple-barrel culvert at W. MacArthur Boulevard and S. Bristol Street, in the vicinity of the project site. The Gardens Channel confluences with the Delhi Channel at Sunflower Avenue, east of S. Bristol Street, and continues flowing south toward Upper Newport Bay.

II.5 Property Ownership/Management

Describe property ownership/management. *Refer to Section 2.2.5 in the Technical Guidance Document (TGD).*

PROPERTY OWNERSHIP/MANAGEMENT	
Private Streets:	Owner
Landscaped Areas:	Owner
Open Space:	Owner
Easements:	Owner
Parks:	Owner
Buildings:	Owner
Structural BMPs:	Owner

The Owner, RCR Bristol, LLC shall assume all BMP maintenance and inspection responsibilities for the proposed project. Inspection and maintenance responsibilities are outlined in Section V of this report.

Section III Site Description

III.1 Physical Setting

Fill out table with relevant information. *Refer to Section 2.3.1 in the Technical Guidance Document (TGD).*

Name of Planned Community/Planning Area (if applicable)	Bristol Commons
Location/Address	3600, 3810 & 3930 S Bristol Street Santa Ana, CA
General Plan Land Use Designation	Commercial
Zoning	The existing zoning for the project site is General Commercial (C2) north of Callen's Common, and Regional Commercial (CR) and General Commercial (C-2) south of Callen's Common and. Both designations include a range of commercial uses as well as all of the uses allowed in the Community Commercial (C-1) zone.
Acreage of Project Site	41.1
Predominant Soil Type	C (see Attachment I)

III.2 Site Characteristics

Fill out table with relevant information and include information regarding BMP sizing, suitability, and feasibility, as applicable. *Refer to Section 2.3.2 in the Technical Guidance Document (TGD).*

Site Characteristics	
Precipitation Zone	0.75

Topography	Topographically the site is relatively flat, gently sloping towards the west.
Drainage Patterns/Connections	See Section II.1 and Section II.4 for a complete description of existing and proposed drainage patterns and connections.
Soil Type, Geology, and Infiltration Properties	Per the Preliminary Geotechnical Investigation Report by Group Delta on August 3, 2022, "The upper 25 to 30 feet consists predominantly of medium to stiff lean clay (CL) and fat clay (CH) that has a medium to high plasticity." It is also stated that "The site is not within a seismic-induced landslide hazard zone area."
Hydrogeologic (Groundwater) Conditions	Per the Preliminary Geotechnical Investigation Report by Group Delta on August 3, 2022, "Historic highest groundwater at the site has been mapped at a depth of about 5 feet bgs. Groundwater was encountered during the current preliminary site investigation between a depth of 12 feet and 16 feet bgs. Groundwater levels measured during the geotechnical investigations are a "snapshot" of the groundwater level and do not account for potential fluctuations in groundwater level due to seasonal and tidal variations."
Geotechnical Conditions (relevant to infiltration)	Per the Preliminary Geotechnical Investigation Report by Group Delta on August 3, 2022, "The onsite soils above the groundwater typically consist of lean clay materials and based on the percolation test results are not suitable for infiltration." There are multiple closed LUST sites within 250 feet of the project.

	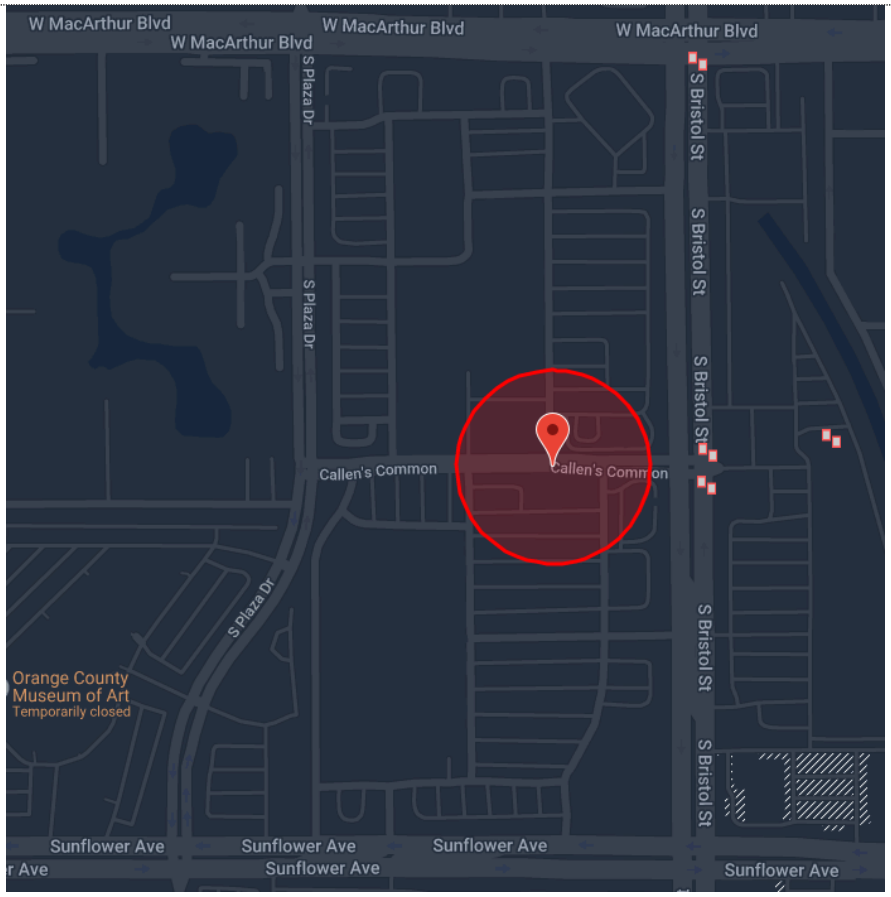
Off-Site Drainage	The project site does not receive any off-site storm water flows onto the property.
Utility and Infrastructure Information	There are several easements on the project site for utilities (water, electrical, etc.) ingress/egress, and other public utility maintenance purposes. In addition, there is an easement for the Orange County Flood Control to maintain the Santa Ana Garden Channel. Refer to the WQMP Exhibit in Section VI for the location of the easement on the project site.

III.3 Watershed Description

Fill out table with relevant information and include information regarding BMP sizing, suitability, and feasibility, as applicable. *Refer to Section 2.3.3 in the Technical Guidance Document (TGD).*

Receiving Waters	Santa Ana Delhi Channel Newport Bay Pacific Ocean

303(d) Listed Impairments	Chlordane, DDT, Nutrients, PCBs, Sedimentation, Malathion, Toxicity, Copper, Indicator Bacteria
Applicable TMDLs	Copper, Toxicity, Malathion
Pollutants of Concern for the Project	Suspended Solid/Sediment, Nutrients, Heavy Metals, Pathogens, Pesticides, Oil & Grease, Toxic Organic Compounds, Trash & Debris
Environmentally Sensitive and Special Biological Significant Areas	There are no Environmentally Sensitive Areas (ESAs) or Areas of Special Biological Significance (ASBS) within the project site or within the project's vicinity.

Section IV Best Management Practices (BMPs)

IV. 1 Project Performance Criteria

Describe project performance criteria. Several steps must be followed in order to determine what performance criteria will apply to a project. These steps include:

- If the project has an approved WIHMP or equivalent, then any watershed specific criteria must be used and the project can evaluate participation in the approved regional or sub-regional opportunities. (Please ask your assigned planner or plan checker regarding whether your project is part of an approved WIHMP or equivalent.)
- Determine applicable hydromodification control performance criteria. *Refer to Section 7.II-2.4.2.2 of the Model WQMP.*
- Determine applicable LID performance criteria. *Refer to Section 7.II-2.4.3 of the Model WQMP.*
- Determine applicable treatment control BMP performance criteria. *Refer to Section 7.II-*3.2.2 *of the Model WQMP.*
- Calculate the LID design storm capture volume for the project. *Refer to Section 7.II-2.4.3 of the Model WQMP.*

(NOC Permit Area only) Is there an approved WIHMP or equivalent for the project area that includes more stringent LID feasibility criteria or if there are opportunities identified for implementing LID on regional or sub-regional basis?	YES ☐	NO ☒
If yes, describe WIHMP feasibility criteria or regional/sub-regional LID opportunities.	NA	

Project Performance Criteria	
If HCOC exists, list applicable hydromodification control performance criteria (Section 7.II-2.4.2.2 in MWQMP)	If a hydrologic condition of concern (HCOC) exists, priority projects shall implement onsite or regional hydromodification controls such that: • Post-development runoff volume for the two-year frequency storm does not exceed that of the predevelopment condition by more than five percent, and • Time of concentration of post-development runoff for the two-year storm event is not less than that for the predevelopment condition by more than five percent. Where the Project WQMP documents that excess runoff volume from the two-year runoff event cannot feasibly be retained and where in-stream controls cannot be used to otherwise mitigate HCOCs, the project shall implement on-site or regional hydromodification controls to: • Retain the excess volume from the two-year runoff event to the MEP, and • Implement on-site or regional hydromodification controls such that the post-development runoff two-year peak flow rate is no greater than 110 percent of the predevelopment runoff two-year peak flow rate.
List applicable LID performance criteria (Section 7.II-2.4.3 from MWQMP)	Infiltrate, harvest and use, evapotranspire, or biotreat/biofilter, the 85th percentile, 24-hour storm event (Design Capture Volume). LID BMPs must be designed to retain, on-site, (infiltrate, harvest and use, or evapotranspire) storm water runoff up to 80 percent average annual capture efficiency.
List applicable treatment control BMP performance criteria (Section 7.II-3.2.2 from MWQMP)	If it is not feasible to meet LID performance criteria through retention and/or biotreatment provided on-site or at a sub-regional/regional scale, then treatment control BMPs shall be provided on-site or offsite prior to discharge to waters of the US. Sizing of treatment control BMP(s) shall be based on either the unmet volume after claiming applicable water quality credits, if appropriate.

Calculate LID design storm capture volume for Project.	DCV = (0.75 x 0.9 +0.15) x 0.75 inches x 41.13 ac x 43560 sf/ac x 1/12 in/ft = 92,381 Refer to Section IV.2.2 for specific Drainage Manage Area (DMA) breakdown and Appendix A for detailed calculations (Worksheet B).

IV.2. Site Design and Drainage

Describe site design and drainage including

- A narrative of site design practices utilized or rationale for not using practices;
- A narrative of how site is designed to allow BMPs to be incorporated to the MEP
- A table of DMA characteristics and list of LID BMPs proposed in each DMA.
- Reference to the WQMP "BMP Exhibit."
- Calculation of Design Capture Volume (DCV) for each drainage area.
- A listing of GIS coordinates for LID and Treatment Control BMPs.

Refer to Section 2.4.2 in the Technical Guidance Document (TGD).

The following section describes the site design BMPs used in this project and the methods used to incorporate them. Careful consideration of site design is a critical first step in storm water pollution prevention from new developments and redevelopments.

Minimize Impervious Area

Impervious surfaces have been minimized by incorporating landscaped areas throughout the site surrounding the proposed buildings. Landscaping will be provided throughout the site within the common areas as well as around the perimeter of the building.

Maximize Natural Infiltration Capacity

Infiltration is not recommended for the project site due to proximity to groundwater and poor soils. Refer to Section IV.3.2 for details.

Preserve Existing Drainage Patterns and Time of Concentration

Runoff from the site will continue to flow similar to existing conditions. Low-flows and first-flush runoff will drain to proprietary vegetated biotreatment systems for water quality treatment via bio-filtration.

Disconnect Impervious Areas

Landscaping will be provided adjacent to sidewalks and between the proposed buildings. Low-flows and first-flush runoff will drain to proprietary vegetated biotreatment systems for water quality treatment via bio-filtration. Refer to Section IV.3.4 for further details.

Protect Existing Vegetation and Sensitive Areas, and Revegetate Disturbed Areas

There are no existing vegetated or sensitive areas to preserve on the project site. All disturbed areas will either be paved or landscaped.

Xeriscape Landscaping

Xeriscape landscaping is not proposed for the project. However, native and/or tolerant landscaping will be incorporated into the site design consistent with City guidelines.

The design capture volumes (DCV) and treatment flow rates (Q_{Design}) for each DMA are summarized in the table below. These have been derived utilizing the "Simple Method" in accordance with the TGD Section III.1.1. Additional calculations and TGD Worksheets are provided in Attachment A.

DMA	Total Drainage Area (sf)	% Imp.	Runoff Coefficient	Design Storm Depth (in)	Tc (min)	Rainfall Intensity (in/hr)	Simple Method DCV (cf)	Q_{Design} (cfs)
DMA A	74,487.6	90.0%	0.825	0.75	5	0.26	3,840.8	0.367
DMA B1	42,688.8	90.0%	0.825	0.75	5	0.26	2,201.1	0.210
DMA B2.1	73,616.4	90.0%	0.825	0.75	5	0.26	3,795.8	0.363
DMA B2.2	25,700.4	90.0%	0.825	0.75	5	0.26	1,325.2	0.127
DMA B3	47,480.4	90.0%	0.825	0.75	5	0.26	2,448.2	0.234
DMA B4	101,059.2	90.0%	0.825	0.75	5	0.26	5,210.9	0.498
DMA B5	36,590.4	90.0%	0.825	0.75	5	0.26	1,886.7	0.180
DMA B6	122,403.6	90.0%	0.825	0.75	5	0.26	6,311.4	0.603
DMA B7	47,916.0	90.0%	0.825	0.75	5	0.26	2,470.7	0.236
DMA C1	126,759.6	90.0%	0.825	0.75	5	0.26	6,536.0	0.624
DMA C2	51,836.4	90.0%	0.825	0.75	5	0.26	2,672.8	0.255
DMA C3	73,180.8	90.0%	0.825	0.75	5	0.26	3,773.4	0.360
DMA D	47,916.0	90.0%	0.825	0.75	5	0.26	2,470.7	0.236
DMA E1	97,138.8	90.0%	0.825	0.75	5	0.26	5,008.7	0.478
DMA E2	36,590.4	90.0%	0.825	0.75	5	0.26	1,886.7	0.180
DMA E3	89,298.0	90.0%	0.825	0.75	5	0.26	4,604.4	0.440
DMA F1	177,289.2	90.0%	0.825	0.75	5	0.26	9,141.5	0.873
DMA F2	110,206.8	90.0%	0.825	0.75	5	0.26	5,682.5	0.543
DMA F3	158,994.0	90.0%	0.825	0.75	5	0.26	8,198.1	0.783
DMA F4	47,916.0	90.0%	0.825	0.75	5	0.26	2,470.7	0.236
DMA F5	114,127.2	90.0%	0.825	0.75	5	0.26	5,884.7	0.562
DMA F6	27,007.2	90.0%	0.825	0.75	5	0.26	1,392.6	0.133
DMA G	62,290.8	90.0%	0.825	0.75	5	0.26	3,211.9	0.307
TOTAL	1,792,494.0	90.0%	0.825	0.75	5	0.26	92,425.5	8.827

IV.3 LID BMP Selection and Project Conformance Analysis

Each sub-section below documents that the proposed design features conform to the applicable project performance criteria via check boxes, tables, calculations, narratives, and/or references to worksheets. *Refer to Section 2.4.2.3 in the Technical Guidance Document (TGD) for selecting LID BMPs and Section 2.4.3 in the Technical Guidance Document (TGD) for conducting conformance analysis with project performance criteria.*

IV.3.1 Hydrologic Source Controls (HSCs)

If required HSCs are included, fill out applicable check box forms. If the retention criteria are otherwise met with other LID BMPs, include a statement indicating HSCs not required.

Name	Included?
Localized on-lot infiltration	☐
Impervious area dispersion (e.g. roof top disconnection)	☐
Street trees (canopy interception)	☐
Residential rain barrels (not actively managed)	☐
Green roofs/Brown roofs	☐
Blue roofs	☐
Impervious area reduction (e.g. permeable pavers, site design)	☐
Other:	☐
Other:	☐
Other:	☐
Other:	☐
Other:	☐
Other:	☐
Other:	☐
Other:	☐

HSCs were not incorporated into the project's design at this stage in the project's development. Any HSC's will be accounted for during final design and the cumulative volume of the HSC's will be subtracted from the required treatment volume in the Final WQMP.

IV.3.2 Infiltration BMPs

Identify infiltration BMPs to be used in project. If design volume cannot be met, state why.

Name	Included?
Bioretention without underdrains	☐
Rain gardens	☐
Porous landscaping	☐
Infiltration planters	☐
Retention swales	☐
Infiltration trenches	☐
Infiltration basins	☐
Drywells	☐
Subsurface infiltration galleries	☐
French drains	☐
Permeable asphalt	☐
Permeable concrete	☐
Permeable concrete pavers	☐
Other:	☐
Other:	☐

Show calculations below to demonstrate if the LID Design Strom Capture Volume can be met with infiltration BMPs. If not, document how much can be met with infiltration and document why it is not feasible to meet the full volume with infiltration BMPs.

Infiltration is not feasible for the project, per geotechnical recommendations due to the poor soils, which are clayey, expansive, and hydrologic group C. Please see Appendix F for more details. The project is also within historical shallow groundwater (5 ft bgs) and as a result, underground infiltration is not feasible due to the bottom of infiltration BMPs requiring 10 ft above historical groundwater.

IV.3.3 Evapotranspiration, Rainwater Harvesting BMPs

If the full Design Storm Capture Volume cannot be met with infiltration BMPs, describe any evapotranspiration and/or rainwater harvesting BMPs included.

Name	Included?
All HSCs; *See Section IV.3.1*	☐
Surface-based infiltration BMPs	☐
Biotreatment BMPs	☐
Above-ground cisterns and basins	☐
Underground detention	☐
Other:	☐
Other:	☐
Other:	☐

Show calculations below to demonstrate if the LID Design Storm Capture Volume can be met with evapotranspiration and/or rainwater harvesting BMPs in combination with infiltration BMPs. If not, document below how much can be met with either infiltration BMPs, evapotranspiration, rainwater harvesting BMPs, or a combination, and document why it is not feasible to meet the full volume with these BMP categories.

As shown by Worksheet J included in Attachment A, harvest and reuse is considered feasible due sufficient water demand during the wet season to drawdown the water quality volume. Due to space constraints, harvest and reuse is not proposed. Harvest and reuse will be explored further during final engineering for portions of the project where the system implementation may be more feasible.

IV.3.4 Biotreatment BMPs

If the full Design Storm Capture Volume cannot be met with infiltration BMPs, and/or evapotranspiration and rainwater harvesting BMPs, describe biotreatment BMPs included. Include sections for selection, suitability, sizing, and infeasibility, as applicable.

Name	Included?
Bioretention with underdrains	☐
Stormwater planter boxes with underdrains	☐
Rain gardens with underdrains	☐
Constructed wetlands	☐
Vegetated swales	☐
Vegetated filter strips	☐
Proprietary vegetated biotreatment systems	☒
Wet extended detention basin	☐
Dry extended detention basins	☐
Other:	☐
Other:	☐

Show calculations below to demonstrate if the LID Design Storm Capture Volume can be met with infiltration, evapotranspiration, rainwater harvesting and/or biotreatment BMPs. If not, document how much can be met with either infiltration BMPs, evapotranspiration, rainwater harvesting BMPs, or a combination, and document why it is not feasible to meet the full volume with these BMP categories.

Modular Wetlands by Modular Wetlands Systems, Inc. are proprietary biotreatment systems that utilize multi-stage treatment processes including screening media filtration, settling, and biofiltration. The pre-treatment chamber contains the first three stages of treatment, and includes a catch basin inlet filter to capture trash, debris, gross solids and sediments, a settling chamber for separating out larger solids, and a media filter cartridge for capturing fine TSS, metals, nutrients, and bacteria. Runoff then flows through the wetland chamber where treatment is achieved through a variety of physical, chemical, and biological processes. As storm water passes down through the planting soil, pollutants are filtered, adsorbed, biodegraded and sequestered by the soil and plants, functioning similar to bioretention systems. The discharge chamber at the end of the unit collects treated flows and discharges back into the storm drain system.

In order to meet trash capture requirements, the MWS will be fitted with trash capture screens.

In final engineering, other biotreatment options, such as biotreatment with underdrain, will be considered.

DMA	DCV (cf)	Design Intensity (in/hr)	Q_{design} (cfs)	Unit Size/Model	Model Treatment Capacity (cfs)	Operating Head (ft)	Number of Units	Total Treatment Provided (cfs)
DMA A	3,840.8	0.26	0.367	MWS-L-8-16	0.462	2.0	1	0.462
DMA B1	2,201.1	0.26	0.210	MWS-L-4-19	0.237	2.0	1	0.237
DMA B2.1	3,795.8	0.26	0.363	MWS-L-8-16	0.462	2.0	1	0.462
DMA B2.2	1,325.2	0.26	0.127	MWS-L-4-13	0.144	2.0	1	0.144
DMA B3	2,448.2	0.26	0.234	MWS-L-4-19	0.237	2.0	1	0.237
DMA B4	5,210.9	0.26	0.498	MWS-L-8-20	0.577	2.0	1	0.577
DMA B5	1,886.7	0.26	0.180	MWS-L-4-17	0.206	2.0	1	0.206
DMA B6	6,311.4	0.26	0.603	MWS-L-8-24	0.693	2.0	1	0.693
DMA B7	2,470.7	0.26	0.236	MWS-L-4-19	0.237	2.0	1	0.237
DMA C1	6,536.0	0.26	0.624	MWS-L-8-24	0.693	2.0	1	0.693
DMA C2	2,672.8	0.26	0.255	MWS-L-4-21	0.268	2.0	1	0.268
DMA C3	3,773.4	0.26	0.360	MWS-L-8-16	0.462	2.0	1	0.462
DMA D	2,470.7	0.26	0.236	MWS-L-4-19	0.237	2.0	1	0.237
DMA E1	5,008.7	0.26	0.478	MWS-L-8-20	0.577	2.0	1	0.577
DMA E2	1,886.7	0.26	0.180	MWS-L-4-17	0.206	2.0	1	0.206
DMA E3	4,604.4	0.26	0.440	MWS-L-8-16	0.462	2.0	1	0.462
DMA F1	9,141.5	0.26	0.873	MWS-L-8-16	0.462	2.0	2	0.924
DMA F2	5,682.5	0.26	0.543	MWS-L-8-12	0.346	2.0	1	0.346
DMA F3	8,198.1	0.26	0.783	MWS-L-8-12	0.346	2.0	2	0.692
DMA F4	2,470.7	0.26	0.236	MWS-L-4-19	0.237	2.0	1	0.237
DMA F5	5,884.7	0.26	0.562	MWS-L-8-20	0.577	2.0	1	0.577
DMA F6	1,392.6	0.26	0.133	MWS-L-4-13	0.144	2.0	1	0.144
DMA G	3,211.9	0.26	0.307	MWS-L-8-12	0.346	2.0	1	0.346
TOTAL	92,425.5	0.26	8.827					

IV.3.5 Hydromodification Control BMPs

Describe hydromodification control BMPs. *See Section 5 of the Technical Guidance Document (TGD).* Include sections for selection, suitability, sizing, and infeasibility, as applicable. Detail compliance with Prior Conditions of Approval (if applicable).

Hydromodification Control BMPs

BMP Name	BMP Description
NA	

The post development runoff volume for the 2-year, 24-hour storm event exceeds that of the pre-development condition by more than 5%. As a result, HCOC's exist for the project.

Due to the HCOC's, the project implements on-site hydromodification controls to reduce the post-development runoff 2-year peak flowrate to no greater than 110% of the pre-development runoff 2-year peak flowrate, per the TGD requirements.

As shown in the table in Section II.3, the 2-year peak flowrate is decreased by 7.6% in the post-development condition compared to the existing. This demonstrates that the peak matching criterion is satisfied and hydromodification requirements are met. Please see Section II.3 for details.

IV.3.6 Regional/Sub-Regional LID BMPs

Describe regional/sub-regional LID BMPs in which the project will participate. *Refer to Section 7.II-2.4.3.2 of the Model WQMP*.

Regional/Sub-Regional LID BMPs
Not applicable.

IV.3.7 Treatment Control BMPs

Treatment control BMPs can only be considered if the project conformance analysis indicates that it is not feasible to retain the full design capture volume with LID BMPs. Describe treatment control BMPs including sections for selection, sizing, and infeasibility, as applicable.

Treatment Control BMPs

BMP Name	BMP Description
NA	

IV.3.8 Non-structural Source Control BMPs

Fill out non-structural source control check box forms or provide a brief narrative explaining if non-structural source controls were not used.

Non-Structural Source Control BMPs				
Identifier	**Name**	**Check One**		**If not applicable, state brief reason**
		Included	**Not Applicable**	
N1	Education for Property Owners, Tenants and Occupants	☒	☐	
N2	Activity Restrictions	☒	☐	
N3	Common Area Landscape Management	☒	☐	
N4	BMP Maintenance	☒	☐	
N5	Title 22 CCR Compliance (How development will comply)	☐	☒	No hazardous waste will be generated by the project.
N6	Local Industrial Permit Compliance	☒	☐	
N7	Spill Contingency Plan	☐	☒	No hazardous waste will be generated by the project.
N8	Underground Storage Tank Compliance	☐	☒	No underground storage tanks are proposed.
N9	Hazardous Materials Disclosure Compliance	☐	☒	No hazardous waste will be generated by the project.
N10	Uniform Fire Code Implementation	☐	☒	No hazardous waste will be generated by the project.
N11	Common Area Litter Control	☒	☐	
N12	Employee Training	☒	☐	
N13	Housekeeping of Loading Docks	☐	☒	No loading docks are proposed by the project.
N14	Common Area Catch Basin Inspection	☒	☐	
N15	Street Sweeping Private Streets and Parking Lots	☒	☐	
N16	Retail Gasoline Outlets	☐	☒	No retail gasoline outlets are proposed by the project.

N1, Education for Property Owners, Tenants and Occupants

Educational materials will be provided to tenants, including brochures and restrictions to reduce pollutants from reaching the storm drain system. Examples include tips for pet care, household tips, and proper household hazardous waste disposal. Tenants will be provided with these materials by the property management prior to occupancy, and periodically thereafter. Refer to Section VII for a list of materials available and attached to this WQMP. Additional materials are available through the County of Orange Stormwater Program website (http://ocwatersheds.com/PublicEd/) and the California Stormwater Quality Association's (CASQA) BMP Handbooks (http://www.cabmphandbooks.com/).

N2, Activity Restrictions

The Owner shall develop ongoing activity restrictions that include those that have the potential to create adverse impacts on water quality. Activities include, but are not limited to: handling and disposal of contaminants, fertilizer and pesticide application restrictions, litter control and pick-up, and vehicle or equipment repair and maintenance in non-designated areas, as well as any other activities that may potentially contribute to water pollution.

N3, Common Area Landscape Management

Management programs will be designed and implemented by the Owner to maintain all the common areas within the project site. These programs will cover how to reduce the potential pollutant sources of fertilizer and pesticide uses, utilization of water-efficient landscaping practices and proper disposal of landscape wastes by the owner/developer and/or contractors.

N4, BMP Maintenance

The Owner will be responsible for the implementation and maintenance of each applicable non-structural BMP, as well as scheduling inspections and maintenance of all applicable structural BMP facilities through its staff, landscape contractor, and/or any other necessary maintenance contractors. Details on BMP maintenance are provided in Section V of this WQMP, and the O&M Plan is included in Appendix D.

N11, Common Area Litter Control

The Owner will be responsible for performing trash pickup and sweeping of littered common areas on a weekly basis or whenever necessary. Responsibilities will also include noting improper disposal materials by the public and reporting such violations for investigation.

N12, Employee Training

All employees of the Owner and any contractors will require training to ensure that employees are aware of maintenance activities that may result in pollutants reaching the storm drain. Training will include, but not be limited to, spill cleanup procedures, proper waste disposal, housekeeping practices, etc.

N14, Common Area Catch Basin Inspection

All on-site catch basin inlets and drainage facilities shall be inspected and maintained by the Owner at least once a year, prior to the rainy season, no later than October 1st of each year.

N15, Street Sweeping Private Streets and Parking Lots

The Owner shall be responsible for sweeping all on-site streets, drive aisles, and covered and uncovered parking areas within the project on a quarterly basis.

IV.3.9 Structural Source Control BMPs

Fill out structural source control check box forms or provide a brief narrative explaining if structural source controls were not used.

Structural Source Control BMPs				
Identifier	**Name**	**Check One**		**If not applicable, state brief reason**
		Included	**Not Applicable**	
S1	Provide storm drain system stenciling and signage	☒	☐	
S2	Design and construct outdoor material storage areas to reduce pollution introduction	☐	☒	No outdoor storage areas
S3	Design and construct trash and waste storage areas to reduce pollution introduction	☒	☐	
S4	Use efficient irrigation systems & landscape design, water conservation, smart controllers, and source control	☒	☐	
S5	Protect slopes and channels and provide energy dissipation	☐	☒	No slopes or channels
	Incorporate requirements applicable to individual priority project categories (from SDRWQCB NPDES Permit)	☒	☐	
S6	Dock areas	☐	☒	No dock areas
S7	Maintenance bays	☐	☒	No maintenance bays
S8	Vehicle wash areas	☐	☒	No vehicle wash areas
S9	Outdoor processing areas	☐	☒	No outdoor processing areas
S10	Equipment wash areas	☐	☒	No equipment wash areas
S11	Fueling areas	☐	☒	No fueling areas
S12	Hillside landscaping	☐	☒	No hillside landscaping
S13	Wash water control for food preparation areas	☒	☐	
S14	Community car wash racks	☐	☒	No community car wash racks

S1/SD-13, Provide storm drain system stenciling and signage

The phrase "NO DUMPING! DRAINS TO OCEAN", or an equally effective phrase approved by the City, will be stenciled on all major storm drain inlets within the project site to alert the public to the destination of

pollutants discharged into storm water. Stencils shall be in place prior to release of certificate of occupancy. Stencils shall be inspected for legibility on an annual basis and re-stenciled as necessary.

S4/SD-12, Use efficient irrigation systems & landscape design, water conservation, smart controllers, and source control

The Owner will be responsible for the installation and maintenance of all common landscape areas utilizing similar planting materials with similar water requirements to reduce excess irrigation runoff. The Owner will be responsible for implementing all efficient irrigation systems for common area landscaping including, but not limited to, provisions for water sensors and programmable irrigation cycles. This includes smart timers, rain sensors, and moisture shut-off valves. The irrigation systems shall be in conformance with water efficiency guidelines. Systems shall be tested twice per year, and water used during testing/flushing shall not be discharged to the storm drain system.

S13, Properly Design: Wash water control for food preparation areas

All wash water from food prep areas will be controlled and proper staff training conducted by the site operator. Food preparation facilities shall meet all health and safety, building and safety and any other applicable regulations, codes requirements, including installation of a grease interceptor where required. Sinks shall be contained with sanitary sewer connections for disposal of wash waters containing kitchen and food wastes.

IV.4 Alternative Compliance Plan (If Applicable)

Describe an alternative compliance plan (if applicable). Include alternative compliance obligations (i.e., gallons, pounds) and describe proposed alternative compliance measures. *Refer to Section 7.II 3.0 in the WQMP.*

Not applicable. Water quality credits will not be applied for the project. LID BMPs will be utilized for water quality treatment on-site in accordance with the MS4 Permit hierarchy identified at the beginning of this Section.

IV.4.1 Water Quality Credits

Determine if water quality credits are applicable for the project. *Refer to Section 3.1 of the Model WQMP for description of credits and Appendix VI of the Technical Guidance Document (TGD) for calculation methods for applying water quality credits.*

<table>
<tr><th colspan="5">Description of Proposed Project</th></tr>
<tr><td colspan="5">Project Types that Qualify for Water Quality Credits (Select all that apply):</td></tr>
<tr><td colspan="2">☐Redevelopment projects that reduce the overall impervious footprint of the project site.</td><td colspan="2">☐Brownfield redevelopment, meaning redevelopment, expansion, or reuse of real property which may be complicated by the presence or potential presence of hazardous substances, pollutants or contaminants, and which have the potential to contribute to adverse ground or surface WQ if not redeveloped.</td><td>☐ Higher density development projects which include two distinct categories (credits can only be taken for one category): those with more than seven units per acre of development (lower credit allowance); vertical density developments, for example, those with a Floor to Area Ratio (FAR) of 2 or those having more than 18 units per acre (greater credit allowance).</td></tr>
<tr><td colspan="2">☐ Mixed use development, such as a combination of residential, commercial, industrial, office, institutional, or other land uses which incorporate design principles that can demonstrate environmental benefits that would not be realized through single use projects (e.g. reduced vehicle trip traffic with the potential to reduce sources of water or air pollution).</td><td colspan="2">☐ Transit-oriented developments, such as a mixed use residential or commercial area designed to maximize access to public transportation; similar to above criterion, but where the development center is within one half mile of a mass transit center (e.g. bus, rail, light rail or commuter train station). Such projects would not be able to take credit for both categories, but may have greater credit assigned</td><td>☐ Redevelopment projects in an established historic district, historic preservation area, or similar significant city area including core City Center areas (to be defined through mapping).</td></tr>
<tr><td>☐Developments with dedication of undeveloped portions to parks, preservation areas and other pervious uses.</td><td>☐ Developments in a city center area.</td><td>☐ Developments in historic districts or historic preservation areas.</td><td>☐ Live-work developments, a variety of developments designed to support residential and vocational needs together – similar to criteria to mixed use development; would not</td><td>☐In-fill projects, the conversion of empty lots and other underused spaces into more beneficially used spaces, such as residential or commercial areas.</td></tr>
</table>

			be able to take credit for both categories.	
Calculation of Water Quality Credits (if applicable)	Not applicable.			

IV.4.2 Alternative Compliance Plan Information

Describe an alternative compliance plan (if applicable). Include alternative compliance obligations (i.e., gallons, pounds) and describe proposed alternative compliance measures. *Refer to Section 7.II 3.0 in the Model WQMP*

Not applicable.

Section V Inspection/Maintenance Responsibility for BMPs

Fill out information in table below. Prepare and attach an Operation and Maintenance Plan. Identify the funding mechanism through which BMPs will be maintained. Inspection and maintenance records must be kept for a minimum of five years for inspection by the regulatory agencies. *Refer to Section 7.II 4.0 in the Model WQMP.*

BMP Inspection/Maintenance			
BMP	**Reponsible Party(s)**	**Inspection/ Maintenance**	**Minimum Frequency of Activities**

		Activities Required	
BIO-7: Proprietary Biotreatment	Owner	Maintenance activities should include clearing of the accumulation of sediment and debris. Additional media/filter replacement determined by manufacturer maintenance procedures.	Per manufacturer

Section VI BMP Exhibit (Site Plan)

VI.1 BMP Exhibit (Site Plan)

Include a BMP Exhibit (Site Plan), at a size no less than 24" by 36," which includes the following minimum information:

- Insert in the title block (lower right hand corner) of BMP Exhibit: the WQMP Number (assigned by staff) and the grading/building or Planning Application permit numbers
- Project location (address, tract/lot number(s), etc.)
- Site boundary
- Land uses and land covers, as applicable
- Suitability/feasibility constraints
- Structural BMP locations
- Drainage delineations and flow information
- Delineate the area being treated by each structural BMP
- GIS coordinates for LID and Treatment Control BMPs
- Drainage connections
- BMP details
- Preparer name and stamp

Please do not include any areas outside of the project area or any information not related to drainage or water quality. The approved BMP Exhibit (Site Plan) shall be submitted as a plan sheet on all grading and building plan sets submitted for plan check review and approval. The BMP Exhibit shall be at the same size as the rest of the plan sheets in the submittal and shall have an approval stamp and signature prior to plan check submittal.

VI.2 Submittal and Recordation of Water Quality Management Plan

Following approval of the Final Project-Specific WQMP, three copies of the approved WQMP (including BMP Exhibit, Operations and Maintenance (O&M) Plan, and Appendices) shall be submitted. In addition, these documents shall be submitted in a PDF format.

Each approved WQMP (including BMP Exhibit, Operations and Maintenance (O&M) Plan, and Appendices) shall be recorded in the Orange County Clerk-Recorder's Office, prior to close-out of grading and/or building permit. Educational Materials are not required to be included.

GROUND FLOOR PLAN



NORTH PHASE

SOUTH PHASE

LEGEND

- RESIDENTIAL
- SENIOR CONTINUUM CARE
- HOTEL
- RETAIL

Gehl ELKUS | MANFREDI ARCHITECTS RAMSA ROBERT A.M. STERN ARCHITECTS RIOS

RELATED

Field Unfactored Infiltration Rates	
Test ID (Boring)	Field Infiltration Rate (in/hr)
P-1	<0.1
P-2	<0.1
P-5	<0.1
P-6	<0.1

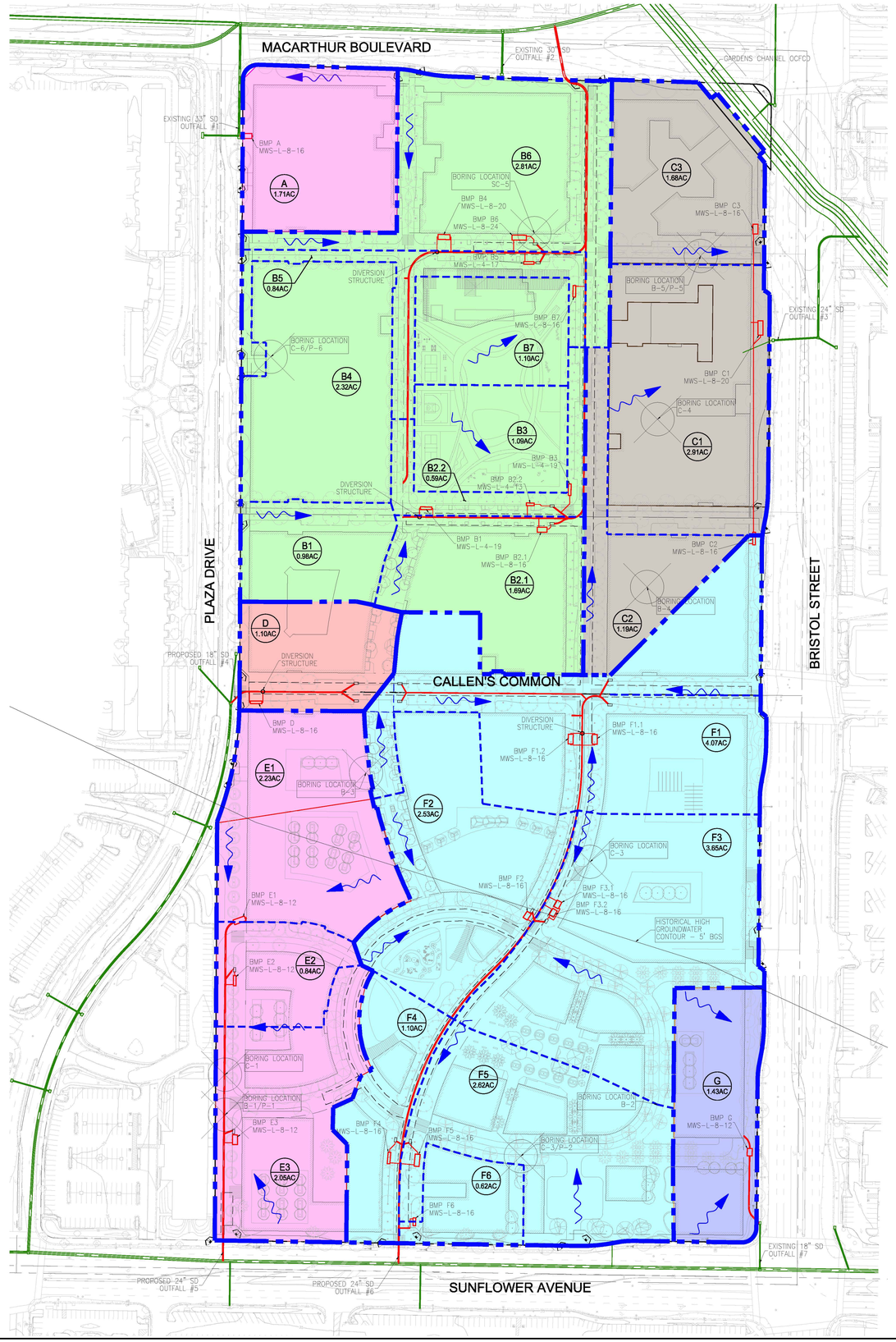

LEGEND

- PROPERTY LINE
- EXISTING STORM DRAIN
- PROPOSED STORM DRAIN
- BMP DRAINAGE AREA BOUNDARY
- SURFACE DRAINAGE
- DMA A
- DMA B
- DMA C
- DMA D
- DMA E
- DMA F
- DMA G
- PROPOSED MODULAR WETLAND SYSTEM SEE FOLLOWING SHEETS FOR DETAILS

DMA	Total Drainage Area (sf)	% Imp.	Runoff Coefficient	Design Storm Depth (in)	Tc (min)	Rainfall Intensity (in/hr)	Simple Method DCV (cf)	Q_{Design} (cfs)
DMA A	74,487.6	90.0%	0.825	0.75	5	0.26	3,840.8	0.367
DMA B1	42,688.8	90.0%	0.825	0.75	5	0.26	2,201.1	0.210
DMA B2.1	73,616.4	90.0%	0.825	0.75	5	0.26	3,795.8	0.363
DMA B2.2	25,700.4	90.0%	0.825	0.75	5	0.26	1,325.2	0.127
DMA B3	47,480.4	90.0%	0.825	0.75	5	0.26	2,448.2	0.234
DMA B4	101,059.2	90.0%	0.825	0.75	5	0.26	5,210.9	0.498
DMA B5	36,590.4	90.0%	0.825	0.75	5	0.26	1,886.7	0.180
DMA B6	122,403.6	90.0%	0.825	0.75	5	0.26	6,311.4	0.603
DMA B7	47,916.0	90.0%	0.825	0.75	5	0.26	2,470.7	0.236
DMA C1	126,759.6	90.0%	0.825	0.75	5	0.26	6,536.0	0.624
DMA C2	51,836.4	90.0%	0.825	0.75	5	0.26	2,672.8	0.255
DMA C3	73,180.8	90.0%	0.825	0.75	5	0.26	3,773.4	0.360
DMA D	47,916.0	90.0%	0.825	0.75	5	0.26	2,470.7	0.236
DMA E1	97,138.8	90.0%	0.825	0.75	5	0.26	5,008.7	0.478
DMA E2	36,590.4	90.0%	0.825	0.75	5	0.26	1,886.7	0.180
DMA E3	89,298.0	90.0%	0.825	0.75	5	0.26	4,604.4	0.440
DMA F1	177,289.2	90.0%	0.825	0.75	5	0.26	9,141.5	0.873
DMA F2	110,206.8	90.0%	0.825	0.75	5	0.26	5,682.5	0.543
DMA F3	158,994.0	90.0%	0.825	0.75	5	0.26	8,198.1	0.783
DMA F4	47,916.0	90.0%	0.825	0.75	5	0.26	2,470.7	0.236
DMA F5	114,127.2	90.0%	0.825	0.75	5	0.26	5,884.7	0.562
DMA F6	27,007.2	90.0%	0.825	0.75	5	0.26	1,392.6	0.133
DMA G	62,290.8	90.0%	0.825	0.75	5	0.26	3,211.9	0.307
TOTAL	1,792,494.0	90.0%	0.825	0.75	5	0.26	92,425.5	8.827

DMA	DCV (cf)	Design Intensity (in/hr)	Q_{design} (cfs)	Unit Size/Model	Model Treatment Capacity (cfs)	Operating Head (ft)	Number of Units	Total Treatment Provided (cfs)	GIS Coordinates
DMA A	3,840.8	0.26	0.367	MWS-L-8-16	0.462	3.4	1	0.462	33.69955127, -117.88862679
DMA B1	2,201.1	0.26	0.210	MWS-L-4-19	0.237	3.4	1	0.237	33.69782271, -117.88759274
DMA B2.1	3,795.8	0.26	0.363	MWS-L-8-16	0.462	3.4	1	0.462	33.69772911, -117.88694096
DMA B2.2	1,325.2	0.26	0.127	MWS-L-4-13	0.144	3.4	1	0.144	33.69784545, -117.88701170
DMA B3	2,448.2	0.26	0.234	MWS-L-4-19	0.237	3.4	1	0.237	33.69791765, -117.88679180
DMA B4	5,210.9	0.26	0.498	MWS-L-8-20	0.577	3.4	1	0.577	33.69909612, -117.88750554
DMA B5	1,886.7	0.26	0.180	MWS-L-4-17	0.206	3.4	1	0.206	33.69897603, -117.88704148
DMA B6	6,311.4	0.26	0.603	MWS-L-8-24	0.693	3.4	1	0.693	33.69909800, -117.88709671
DMA B7	2,470.7	0.26	0.236	MWS-L-4-19	0.237	3.4	1	0.237	33.69884339, -117.88678318
DMA C1	6,536.0	0.26	0.624	MWS-L-8-24	0.693	3.4	1	0.693	33.69868985, -117.88573564
DMA C2	2,672.8	0.26	0.255	MWS-L-4-21	0.268	3.4	1	0.268	33.69770346, -117.88575353
DMA C3	3,773.4	0.26	0.360	MWS-L-8-16	0.462	3.4	1	0.462	33.69915513, -117.88577380
DMA D	2,470.7	0.26	0.236	MWS-L-4-19	0.237	3.4	1	0.237	33.69690021, -117.88852721
DMA E1	5,008.7	0.26	0.478	MWS-L-8-20	0.577	3.4	1	0.577	33.69588183, -117.88859965
DMA E2	1,886.7	0.26	0.180	MWS-L-4-17	0.206	3.4	1	0.206	33.69559712, -117.88862406
DMA E3	4,604.4	0.26	0.440	MWS-L-8-16	0.462	3.4	1	0.462	33.69485266, -117.88861119
DMA F1	9,141.5	0.26	0.873	MWS-L-8-16	0.462	3.4	2	0.924	F1.1: 33.69675103, -117.88663159 F1.2: 33.69674924, -117.88676831
DMA F2	5,682.5	0.26	0.543	MWS-L-8-12	0.346	3.4	1	0.346	33.69592401, -117.88699162
DMA F3	8,198.1	0.26	0.783	MWS-L-8-12	0.346	3.4	2	0.692	F3.1: 33.69598058, -117.88682008 F3.2: 33.69593873, -117.88684756
DMA F4	2,470.7	0.26	0.236	MWS-L-4-19	0.237	3.4	1	0.237	33.69478067, -117.8877491
DMA F5	5,884.7	0.26	0.562	MWS-L-8-20	0.577	3.4	1	0.577	33.69476990, -117.88759053
DMA F6	1,392.6	0.26	0.133	MWS-L-4-13	0.144	3.4	1	0.144	33.69448607, -117.88759468
DMA G	3,211.9	0.26	0.307	MWS-L-8-12	0.346	3.4	1	0.346	33.69482906, -117.88573078
TOTAL	92,425.5	0.26	8.827						

100' 0' 50' 100'
SCALE: 1" = 100'

PREPARED BY:
FUSCOE ENGINEERING
16795 Von Karman, Suite 100
Irvine, California 92606
tel 949.474.1960 fax 949.474.5315
www.fuscoe.com

REGISTERED PROFESSIONAL ENGINEER DONNA A. SLAVEN NO. C63451 Exp. 09/30/24 CIVIL STATE OF CALIFORNIA

PRELIMINARY WATER QUALITY MANAGEMENT PLAN
RELATED BRISTOL
CITY OF SANTA ANA, CALIFORNIA

PROJECT NO. 622-015

SHEET 1 OF 1

CITY OF SANTA ANA – BRISTOL COMMONS
PRELIMINARY WATER QUALITY MANAGEMENT PLAN
2023-03-31

C:\PROJECTS\622-015_SUPPORT FILES\REPORTS\WQMP\SECTION 6 GRAPHICS\622-015PWQMP_BRISTOL WQMP.DWG (03-28-23 12:44:03PM) Plotted by: Shadi

SITE SPECIFIC DATA			
PROJECT NUMBER			
PROJECT NAME			
PROJECT LOCATION			
STRUCTURE ID			
TREATMENT REQUIRED			
FLOW BASED (CFS)			
0.144			
PEAK BYPASS REQUIRED (CFS) – IF APPLICABLE			OFFLINE
PIPE DATA	I.E.	MATERIAL	DIAMETER
INLET PIPE 1			
INLET PIPE 2	N/A	N/A	N/A
OUTLET PIPE			
	PRETREATMENT	BIOFILTRATION	DISCHARGE
RIM ELEVATION			
SURFACE LOAD	PEDESTRIAN		
NOTES:			

* PRELIMINARY NOT FOR CONSTRUCTION

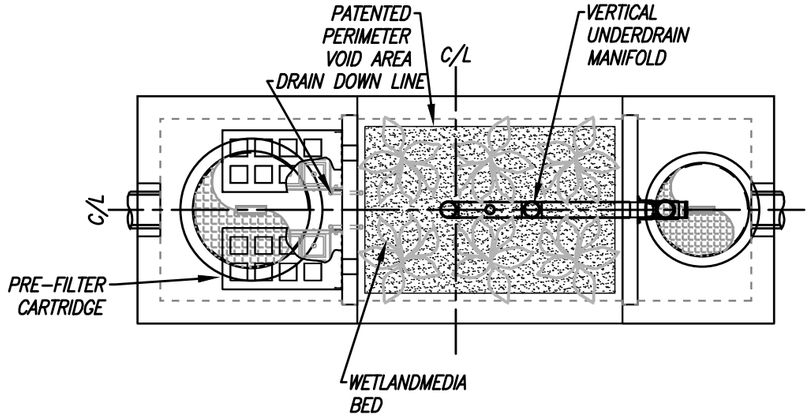

PLAN VIEW

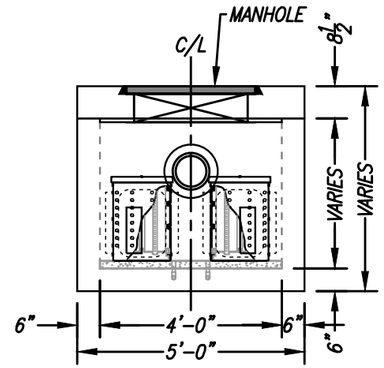

LEFT END VIEW

DMAs:
B2.2
F6

Head - 3.4'

INSTALLATION NOTES

1. CONTRACTOR TO PROVIDE ALL LABOR, EQUIPMENT, MATERIALS AND INCIDENTALS REQUIRED TO OFFLOAD AND INSTALL THE SYSTEM AND APPURTENANCES IN ACCORDANCE WITH THIS DRAWING AND THE MANUFACTURERS' SPECIFICATIONS, UNLESS OTHERWISE STATED IN MANUFACTURER'S CONTRACT.
2. UNIT MUST BE INSTALLED ON LEVEL BASE. MANUFACTURER RECOMMENDS A MINIMUM 6" LEVEL ROCK BASE UNLESS SPECIFIED BY THE PROJECT ENGINEER. CONTRACTOR IS RESPONSIBLE FOR VERIFYING PROJECT ENGINEER'S RECOMMENDED BASE SPECIFICATIONS.
4. CONTRACTOR TO SUPPLY AND INSTALL ALL EXTERNAL CONNECTING PIPES. ALL PIPES MUST BE FLUSH WITH INSIDE SURFACE OF CONCRETE (PIPES CANNOT INTRUDE BEYOND FLUSH). INVERT OF OUTFLOW PIPE MUST BE FLUSH WITH DISCHARGE CHAMBER FLOOR. ALL PIPES SHALL BE SEALED WATERTIGHT PER MANUFACTURER'S STANDARD CONNECTION DETAIL.
5. CONTRACTOR RESPONSIBLE FOR INSTALLATION OF ALL PIPES, RISERS, MANHOLES, AND HATCHES. CONTRACTOR TO USE GROUT AND/OR BRICKS TO MATCH COVERS WITH FINISHED SURFACE UNLESS SPECIFIED OTHERWISE.
6. VEGETATION SUPPLIED AND INSTALLED BY OTHERS. ALL UNITS WITH VEGETATION MUST HAVE DRIP OR SPRAY IRRIGATION SUPPLIED AND INSTALLED BY OTHERS.
7. CONTRACTOR RESPONSIBLE FOR CONTACTING CONTECH FOR ACTIVATION OF UNIT. MANUFACTURER'S WARRANTY IS VOID WITHOUT PROPER ACTIVATION BY A CONTECH REPRESENTATIVE.

GENERAL NOTES

1. MANUFACTURER TO PROVIDE ALL MATERIALS UNLESS OTHERWISE NOTED.
2. ALL DIMENSIONS, ELEVATIONS, SPECIFICATIONS AND CAPACITIES ARE SUBJECT TO CHANGE. FOR PROJECT SPECIFIC DRAWINGS DETAILING EXACT DIMENSIONS, WEIGHTS AND ACCESSORIES PLEASE CONTACT CONTECH.

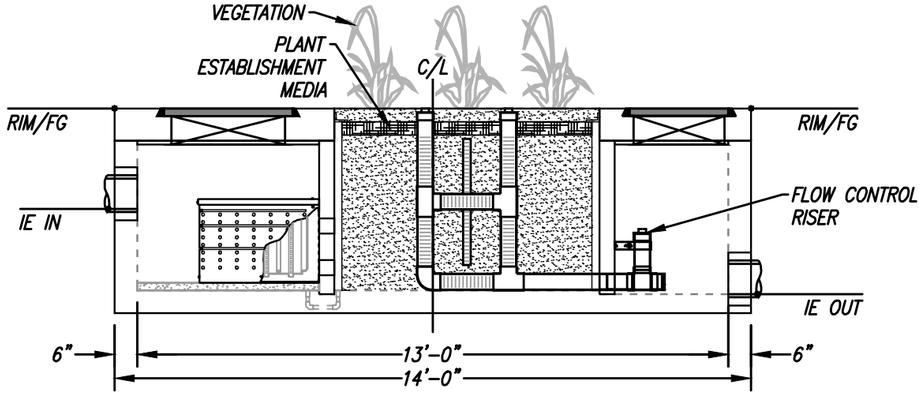

ELEVATION VIEW

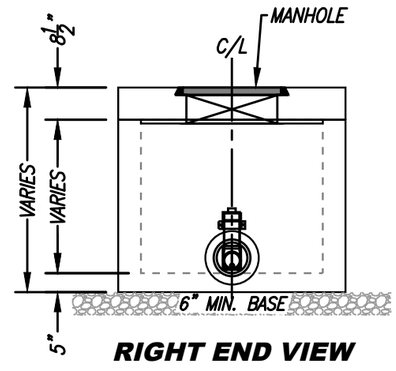

RIGHT END VIEW

TREATMENT FLOW (CFS)	0.144
OPERATING HEAD (FT)	3.4
PRETREATMENT LOADING RATE (GPM/SF)	1.3
WETLAND MEDIA LOADING RATE (GPM/SF)	1.0

MODULAR WETLANDS
FOR PATENT INFORMATION, GO TO www.ContechES.com/IP

CONTECH ENGINEERED SOLUTIONS LLC
www.ContechES.com

MWS-L-4-13-V
STORMWATER BIOFILTRATION SYSTEM
STANDARD DETAIL

MODULAR WETLAND SYSTEMS - LINEAR 2.0
17' VAULT TYPE

DMAs:
B5
E2

Head - 3.4'

FLOW RATES
PEAK TREATMENT FLOW RATE = .206 CFS OR 92.45 GPM
PEAK BYPASS FLOW RATE = OPTIONAL BYPASS
SPECIFICATIONS
INSTALL AT SURFACE
O.D. DIMENSIONS = 18' X 5' X 4.7'
TOP OF CURB TO INVERT OUT = 4.13'
SEDIMENT STORAGE CAPACITY = 1000 LBS OR 23.5 CF

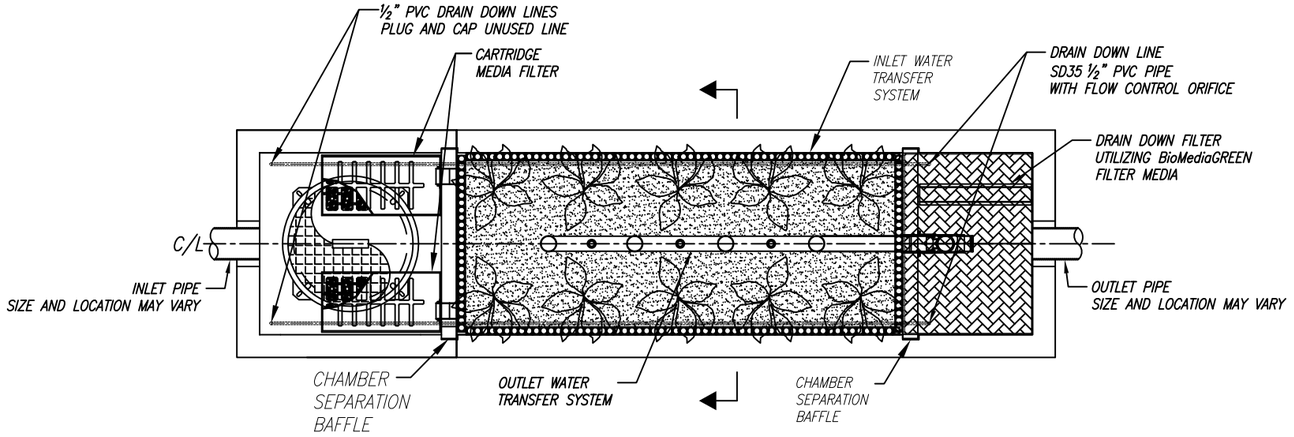

PLAN VIEW

BIOFILTRATION CHAMBER SURFACE AREA CALCS
SIDES = 2
9.5' L x 3.4' H = 32.3 SF
SIDE SURFACE AREA = 64.6 SF
ENDS = 2
3.7' L x 3.4' H = 12.6 SF
END SURFACE AREA = 25.2 SF
TOTAL WETLAND MEDIA SURFACE AREA **= 89.8 SF**
WETLAND MEDIA LOADING RATE 92.45 GPM / 89.8 SF **= 1.03 GPM/SF**
PRETREATMENT FILTER SURFACE AREA CALCS
SIDES = 2
0.50' L x 1.67' H = 0.84 SF
SIDE SURFACE AREA = 1.68 SF
ENDS = 2
0.25' L x 1.67' H = 0.42 SF
END SURFACE AREA = 0.84 SF
TOTAL PRETREATMENT SURFACE AREA 2.52 SF x 28 FILTERS **= 70.56 SF**
PRETREATMENT FILTER LOADING RATE 92.45 GPM / 70.56 SF **= 1.31 GPM/SF**

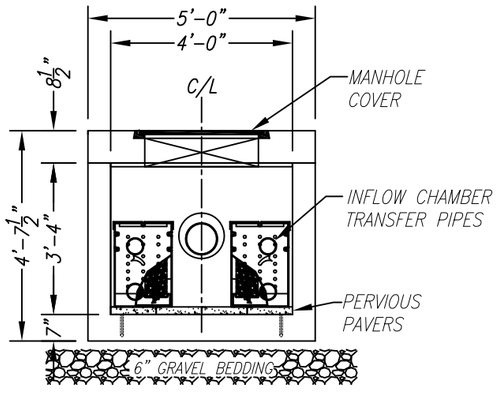

LEFT END VIEW
PRETREATMENT CHAMBER

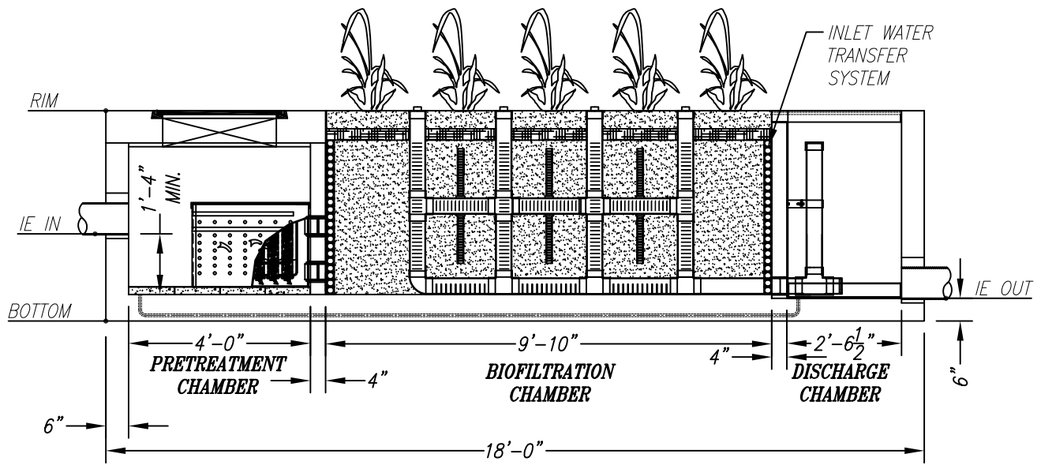

ELEVATION VIEW

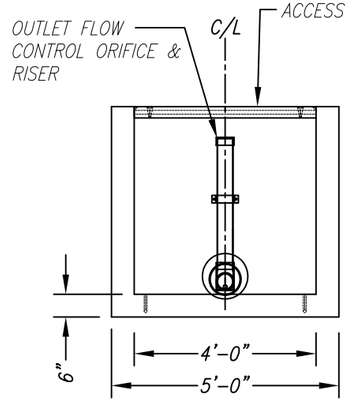

RIGHT END VIEW
DISCHARGE CHAMBER

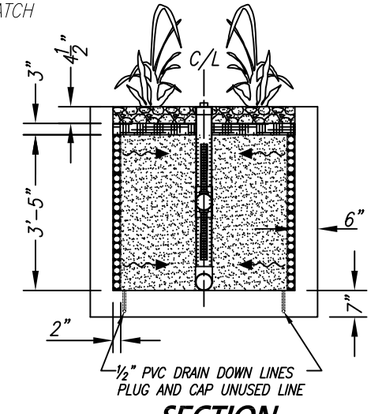

SECTION
BIOFILTRATION CHAMBER

LEGEND

- 2" DRAIN CELL PERIMETER INLET WATER TRANSFER SYSTEM
- WETLAND MEDIA
- PLANT/ROOT MOISTURE RETENTION LAYER
- MANHOLE / ACCESS HATCH

INSTALLATION NOTES:

1. INSTALL UNIT ON LEVEL BED OF GRAVEL OF AT LEAST 6" IN DEPTH.
2. CONCRETE 28 DAY COMPRESSIVE STRENGTH fc=5,000 PSI.
3. REINFORCING: ASTM A-615, GRADE 60.
4. RATED FOR PARKWAY LOADING 300 PSF.
5. ALL WALLS ARE 6" THICK, BAFFLES ARE 4" THICK, BOTTOM 7" OR 8" THICK, TOP 8.5" THICK.
6. JOINT SEALANT: BUTYL RUBBER SS-S-00210

MODULAR WETLAND SYSTEMS INC.
P.O. BOX 869
OCEANSIDE, CA 92049
www.ModularWetlands.com

PROPRIETARY AND CONFIDENTIAL

THE INFORMATION CONTAINED IN THIS DRAWING IS THE SOLE PROPERTY OF MODULAR WETLAND SYSTEMS INC. ANY REPRODUCTION IN PART OR AS A WHOLE WITHOUT THE WRITTEN PERMISSION OF MODULAR WETLAND SYSTEMS INC. IS PROHIBITED.

	NAME	DATE
DRAWN		
EDITED		

COMMENTS:

TITLE: MWS LINEAR 2.0 VAULT TYPE

SIZE	DWG. NO.	REV
	MWS-L-4-17-V	

SCALE 1:40 | UNITS = INCHES | SHEET 1 OF 1

SITE SPECIFIC DATA			
PROJECT NUMBER			
PROJECT NAME			
PROJECT LOCATION			
STRUCTURE ID			
TREATMENT REQUIRED			
FLOW BASED (CFS)			
0.237			
PEAK BYPASS REQUIRED (CFS) – IF APPLICABLE			OFFLINE
PIPE DATA	I.E.	MATERIAL	DIAMETER
INLET PIPE 1			
INLET PIPE 2	N/A	N/A	N/A
OUTLET PIPE			
	PRETREATMENT	BIOFILTRATION	DISCHARGE
RIM ELEVATION			
SURFACE LOAD	PEDESTRIAN		
NOTES:			

* PRELIMINARY NOT FOR CONSTRUCTION

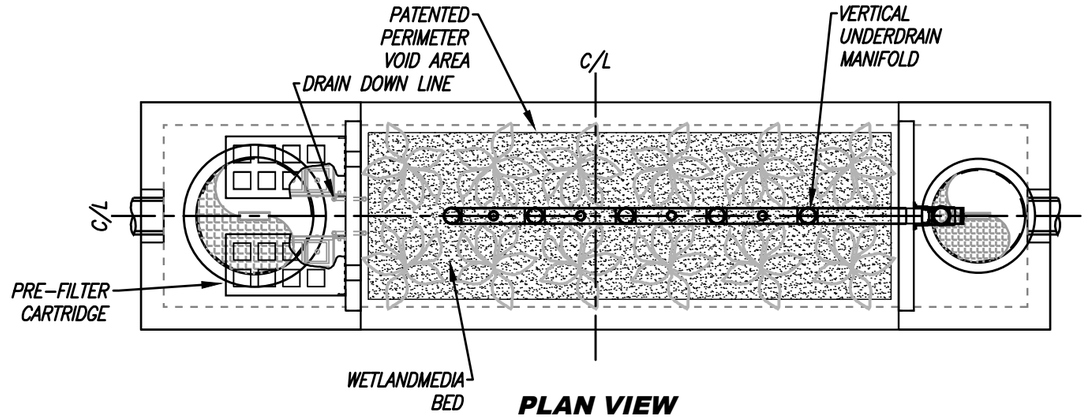

PLAN VIEW

DMAs:
B1
B3
B7
D
F4

Head - 3.4'

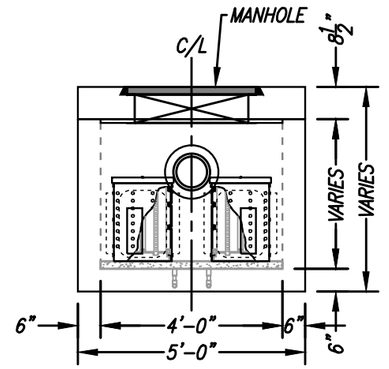

LEFT END VIEW

INSTALLATION NOTES

1. CONTRACTOR TO PROVIDE ALL LABOR, EQUIPMENT, MATERIALS AND INCIDENTALS REQUIRED TO OFFLOAD AND INSTALL THE SYSTEM AND APPURTENANCES IN ACCORDANCE WITH THIS DRAWING AND THE MANUFACTURERS' SPECIFICATIONS, UNLESS OTHERWISE STATED IN MANUFACTURER'S CONTRACT.
2. UNIT MUST BE INSTALLED ON LEVEL BASE. MANUFACTURER RECOMMENDS A MINIMUM 6" LEVEL ROCK BASE UNLESS SPECIFIED BY THE PROJECT ENGINEER. CONTRACTOR IS RESPONSIBLE FOR VERIFYING PROJECT ENGINEER'S RECOMMENDED BASE SPECIFICATIONS.
4. CONTRACTOR TO SUPPLY AND INSTALL ALL EXTERNAL CONNECTING PIPES. ALL PIPES MUST BE FLUSH WITH INSIDE SURFACE OF CONCRETE (PIPES CANNOT INTRUDE BEYOND FLUSH). INVERT OF OUTFLOW PIPE MUST BE FLUSH WITH DISCHARGE CHAMBER FLOOR. ALL PIPES SHALL BE SEALED WATERTIGHT PER MANUFACTURER'S STANDARD CONNECTION DETAIL.
5. CONTRACTOR RESPONSIBLE FOR INSTALLATION OF ALL PIPES, RISERS, MANHOLES, AND HATCHES. CONTRACTOR TO USE GROUT AND/OR BRICKS TO MATCH COVERS WITH FINISHED SURFACE UNLESS SPECIFIED OTHERWISE.
6. VEGETATION SUPPLIED AND INSTALLED BY OTHERS. ALL UNITS WITH VEGETATION MUST HAVE DRIP OR SPRAY IRRIGATION SUPPLIED AND INSTALLED BY OTHERS.
7. CONTRACTOR RESPONSIBLE FOR CONTACTING CONTECH FOR ACTIVATION OF UNIT. MANUFACTURER'S WARRANTY IS VOID WITHOUT PROPER ACTIVATION BY A CONTECH REPRESENTATIVE.

GENERAL NOTES

1. MANUFACTURER TO PROVIDE ALL MATERIALS UNLESS OTHERWISE NOTED.
2. ALL DIMENSIONS, ELEVATIONS, SPECIFICATIONS AND CAPACITIES ARE SUBJECT TO CHANGE. FOR PROJECT SPECIFIC DRAWINGS DETAILING EXACT DIMENSIONS, WEIGHTS AND ACCESSORIES PLEASE CONTACT CONTECH.

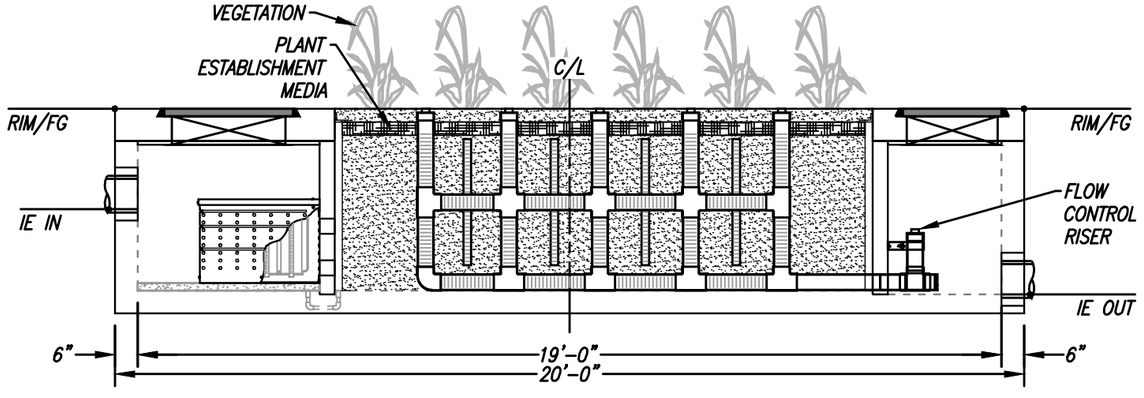

ELEVATION VIEW

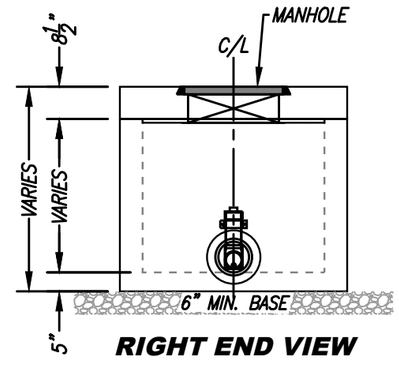

RIGHT END VIEW

TREATMENT FLOW (CFS)	0.237
OPERATING HEAD (FT)	3.4
PRETREATMENT LOADING RATE (GPM/SF)	2.1
WETLAND MEDIA LOADING RATE (GPM/SF)	1.0

MODULAR WETLANDS
FOR PATENT INFORMATION, GO TO www.ContechES.com/IP

CONTECH ENGINEERED SOLUTIONS LLC
www.ContechES.com

MWS-L-4-19-V
STORMWATER BIOFILTRATION SYSTEM
STANDARD DETAIL

SITE SPECIFIC DATA			
PROJECT NUMBER			
PROJECT NAME			
PROJECT LOCATION			
STRUCTURE ID			
TREATMENT REQUIRED			
FLOW BASED (CFS)			
0.268			
PEAK BYPASS REQUIRED (CFS) – IF APPLICABLE			OFFLINE
PIPE DATA	I.E.	MATERIAL	DIAMETER
INLET PIPE 1			
INLET PIPE 2	N/A	N/A	N/A
OUTLET PIPE			
	PRETREATMENT	BIOFILTRATION	DISCHARGE
RIM ELEVATION			
SURFACE LOAD	PEDESTRIAN		
NOTES:			

* PRELIMINARY NOT FOR CONSTRUCTION

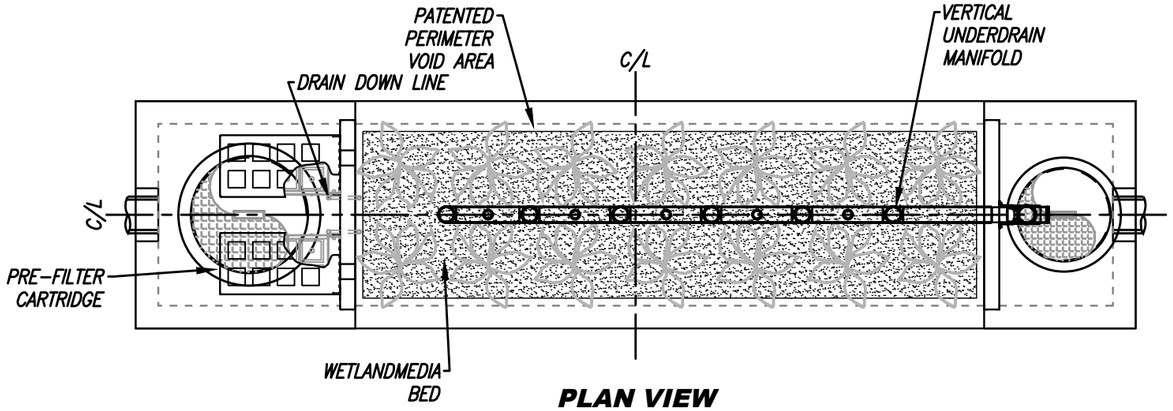

PLAN VIEW

DMAs:
C2

Head - 3.4'

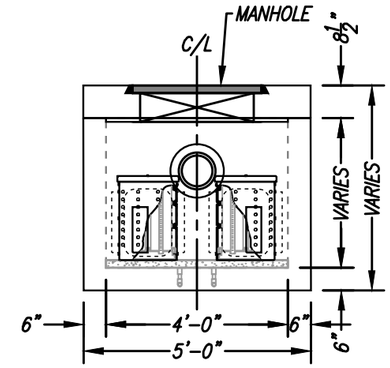

LEFT END VIEW

INSTALLATION NOTES

1. CONTRACTOR TO PROVIDE ALL LABOR, EQUIPMENT, MATERIALS AND INCIDENTALS REQUIRED TO OFFLOAD AND INSTALL THE SYSTEM AND APPURTENANCES IN ACCORDANCE WITH THIS DRAWING AND THE MANUFACTURERS' SPECIFICATIONS, UNLESS OTHERWISE STATED IN MANUFACTURER'S CONTRACT.
2. UNIT MUST BE INSTALLED ON LEVEL BASE. MANUFACTURER RECOMMENDS A MINIMUM 6" LEVEL ROCK BASE UNLESS SPECIFIED BY THE PROJECT ENGINEER. CONTRACTOR IS RESPONSIBLE FOR VERIFYING PROJECT ENGINEER'S RECOMMENDED BASE SPECIFICATIONS.
4. CONTRACTOR TO SUPPLY AND INSTALL ALL EXTERNAL CONNECTING PIPES. ALL PIPES MUST BE FLUSH WITH INSIDE SURFACE OF CONCRETE (PIPES CANNOT INTRUDE BEYOND FLUSH). INVERT OF OUTFLOW PIPE MUST BE FLUSH WITH DISCHARGE CHAMBER FLOOR. ALL PIPES SHALL BE SEALED WATERTIGHT PER MANUFACTURER'S STANDARD CONNECTION DETAIL.
5. CONTRACTOR RESPONSIBLE FOR INSTALLATION OF ALL PIPES, RISERS, MANHOLES, AND HATCHES. CONTRACTOR TO USE GROUT AND/OR BRICKS TO MATCH COVERS WITH FINISHED SURFACE UNLESS SPECIFIED OTHERWISE.
6. VEGETATION SUPPLIED AND INSTALLED BY OTHERS. ALL UNITS WITH VEGETATION MUST HAVE DRIP OR SPRAY IRRIGATION SUPPLIED AND INSTALLED BY OTHERS.
7. CONTRACTOR RESPONSIBLE FOR CONTACTING CONTECH FOR ACTIVATION OF UNIT. MANUFACTURER'S WARRANTY IS VOID WITHOUT PROPER ACTIVATION BY A CONTECH REPRESENTATIVE.

GENERAL NOTES

1. MANUFACTURER TO PROVIDE ALL MATERIALS UNLESS OTHERWISE NOTED.
2. ALL DIMENSIONS, ELEVATIONS, SPECIFICATIONS AND CAPACITIES ARE SUBJECT TO CHANGE. FOR PROJECT SPECIFIC DRAWINGS DETAILING EXACT DIMENSIONS, WEIGHTS AND ACCESSORIES PLEASE CONTACT CONTECH.

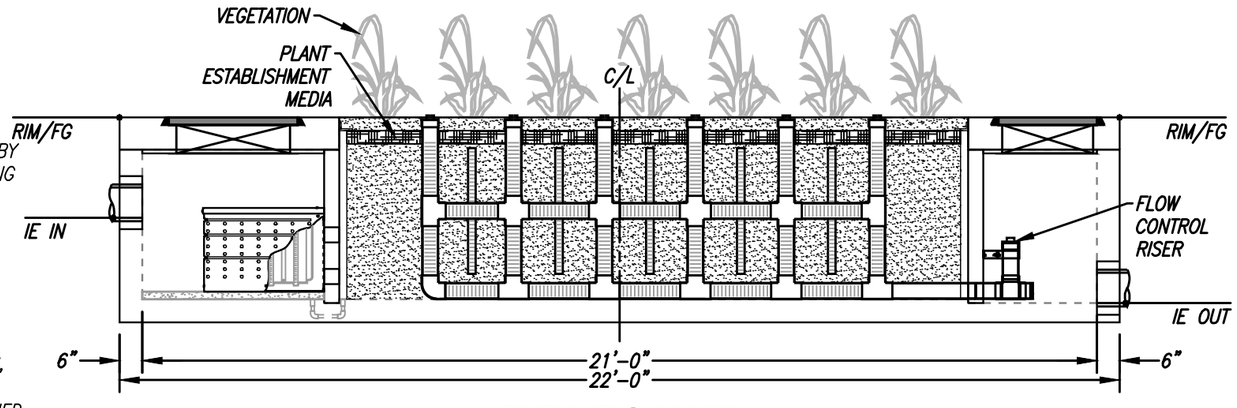

ELEVATION VIEW

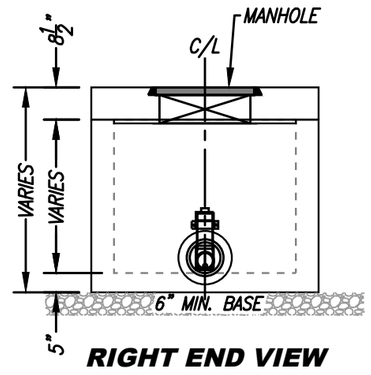

RIGHT END VIEW

TREATMENT FLOW (CFS)	0.268
OPERATING HEAD (FT)	3.4
PRETREATMENT LOADING RATE (GPM/SF)	2.3
WETLAND MEDIA LOADING RATE (GPM/SF)	1.0

MODULAR WETLANDS
FOR PATENT INFORMATION, GO TO www.ContechES.com/IP

CONTECH ENGINEERED SOLUTIONS LLC
www.ContechES.com

MWS-L-4-21-V
STORMWATER BIOFILTRATION SYSTEM
STANDARD DETAIL

SITE SPECIFIC DATA			
PROJECT NUMBER			
PROJECT NAME			
PROJECT LOCATION			
STRUCTURE ID			
TREATMENT REQUIRED			
FLOW BASED (CFS)			
0.346			
PEAK BYPASS REQUIRED (CFS) – IF APPLICABLE			OFFLINE
PIPE DATA	I.E.	MATERIAL	DIAMETER
INLET PIPE 1			
INLET PIPE 2	N/A	N/A	N/A
OUTLET PIPE			
	PRETREATMENT	BIOFILTRATION	DISCHARGE
RIM ELEVATION			
SURFACE LOAD	PEDESTRIAN		
NOTES:			

* PRELIMINARY NOT FOR CONSTRUCTION

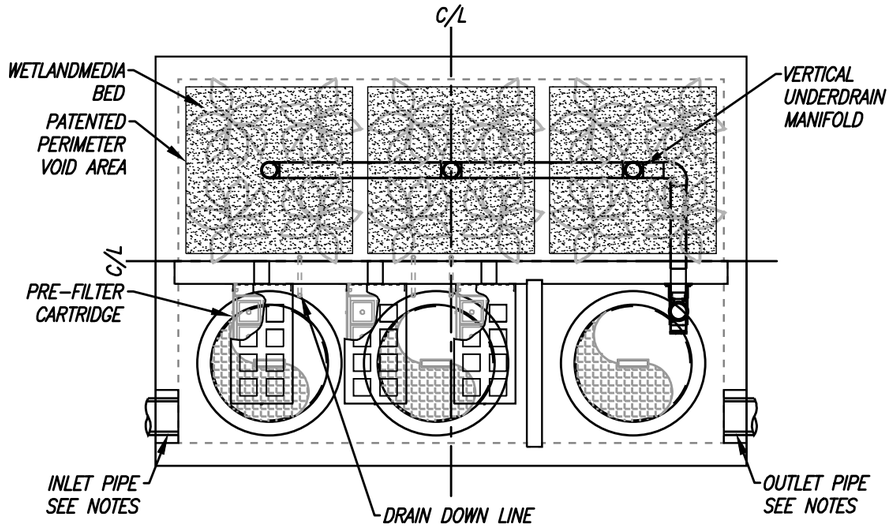

PLAN VIEW

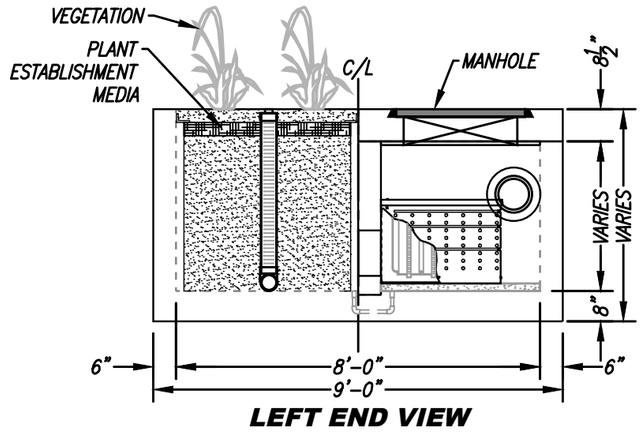

LEFT END VIEW

INSTALLATION NOTES

1. CONTRACTOR TO PROVIDE ALL LABOR, EQUIPMENT, MATERIALS AND INCIDENTALS REQUIRED TO OFFLOAD AND INSTALL THE SYSTEM AND APPURTENANCES IN ACCORDANCE WITH THIS DRAWING AND THE MANUFACTURERS' SPECIFICATIONS, UNLESS OTHERWISE STATED IN MANUFACTURER'S CONTRACT.
2. UNIT MUST BE INSTALLED ON LEVEL BASE. MANUFACTURER RECOMMENDS A MINIMUM 6" LEVEL ROCK BASE UNLESS SPECIFIED BY THE PROJECT ENGINEER. CONTRACTOR IS RESPONSIBLE FOR VERIFYING PROJECT ENGINEER'S RECOMMENDED BASE SPECIFICATIONS.
4. CONTRACTOR TO SUPPLY AND INSTALL ALL EXTERNAL CONNECTING PIPES. ALL PIPES MUST BE FLUSH WITH INSIDE SURFACE OF CONCRETE (PIPES CANNOT INTRUDE BEYOND FLUSH). INVERT OF OUTFLOW PIPE MUST BE FLUSH WITH DISCHARGE CHAMBER FLOOR. ALL PIPES SHALL BE SEALED WATERTIGHT PER MANUFACTURER'S STANDARD CONNECTION DETAIL.
5. CONTRACTOR RESPONSIBLE FOR INSTALLATION OF ALL PIPES, RISERS, MANHOLES, AND HATCHES. CONTRACTOR TO USE GROUT AND/OR BRICKS TO MATCH COVERS WITH FINISHED SURFACE UNLESS SPECIFIED OTHERWISE.
6. VEGETATION SUPPLIED AND INSTALLED BY OTHERS. ALL UNITS WITH VEGETATION MUST HAVE DRIP OR SPRAY IRRIGATION SUPPLIED AND INSTALLED BY OTHERS.
7. CONTRACTOR RESPONSIBLE FOR CONTACTING CONTECH FOR ACTIVATION OF UNIT. MANUFACTURER'S WARRANTY IS VOID WITHOUT PROPER ACTIVATION BY A CONTECH REPRESENTATIVE.

GENERAL NOTES

1. MANUFACTURER TO PROVIDE ALL MATERIALS UNLESS OTHERWISE NOTED.
2. ALL DIMENSIONS, ELEVATIONS, SPECIFICATIONS AND CAPACITIES ARE SUBJECT TO CHANGE. FOR PROJECT SPECIFIC DRAWINGS DETAILING EXACT DIMENSIONS, WEIGHTS AND ACCESSORIES PLEASE CONTACT CONTECH.

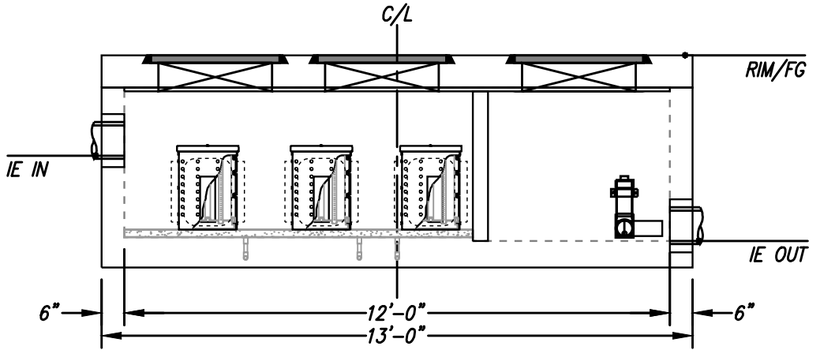

ELEVATION VIEW

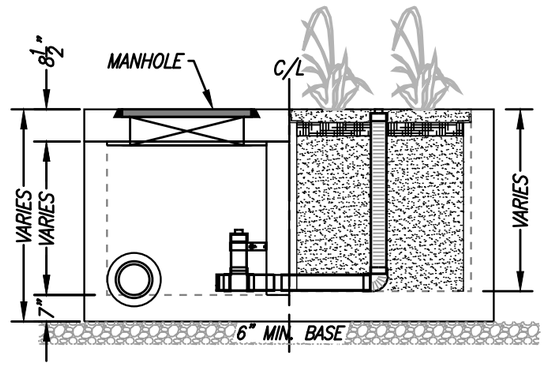

RIGHT END VIEW

DMAs:
F2
F3
G

Head - 3.4'

TREATMENT FLOW (CFS)	0.346
OPERATING HEAD (FT)	3.4
PRETREATMENT LOADING RATE (GPM/SF)	2.0
WETLAND MEDIA LOADING RATE (GPM/SF)	1.0

MODULAR WETLANDS
FOR PATENT INFORMATION, GO TO www.ContechES.com/IP

CONTECH ENGINEERED SOLUTIONS LLC
www.ContechES.com

MWS-L-8-12-V
STORMWATER BIOFILTRATION SYSTEM
STANDARD DETAIL

MODULAR WETLAND SYSTEMS LINEAR 2.0 VAULT TYPE

FLOW RATES
PEAK TREATMENT FLOW RATE = 0.462 CFS OR 207.31 GPM
PEAK BYPASS FLOW RATE = N/A
SPECIFICATIONS
INSTALL AT SURFACE
O.D. DIMENSIONS = 17' X 9' X 4.7'

DMAs:
A
B2.1
C3
E3
F1

Head - 3.4'

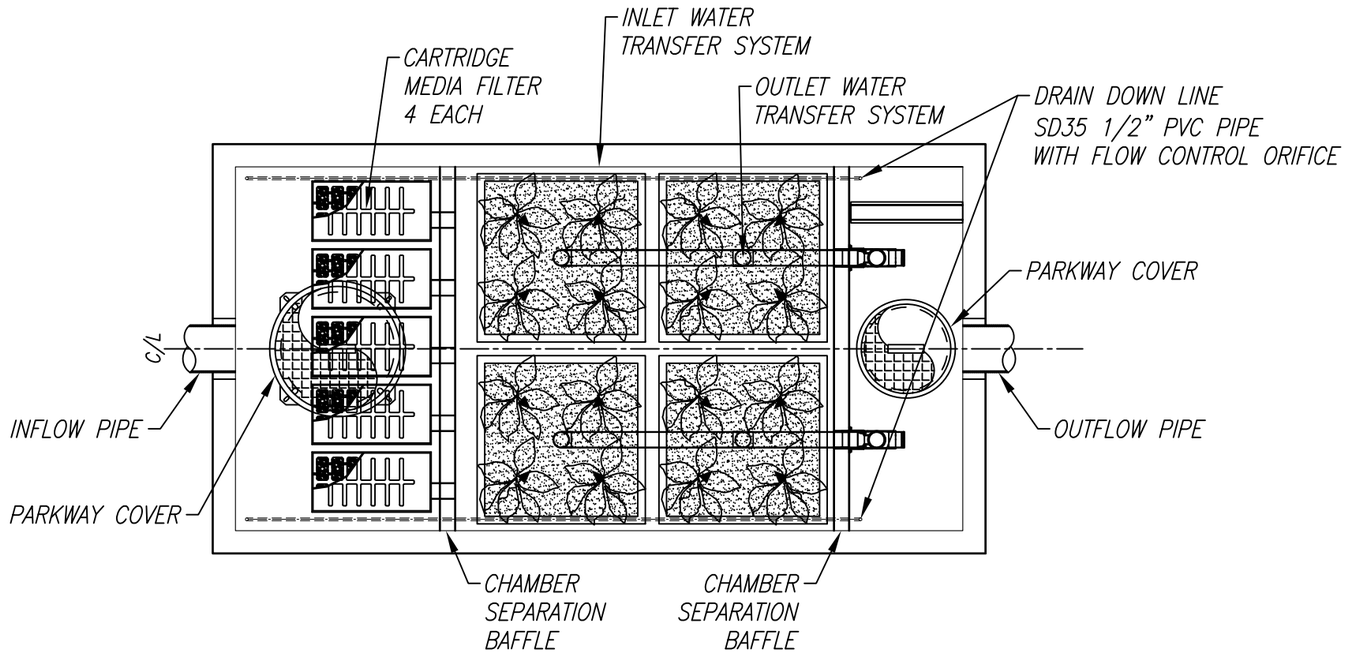

PLAN VIEW

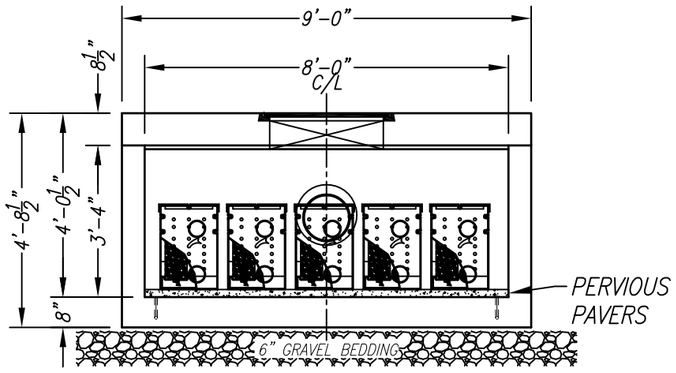

LEFT END VIEW

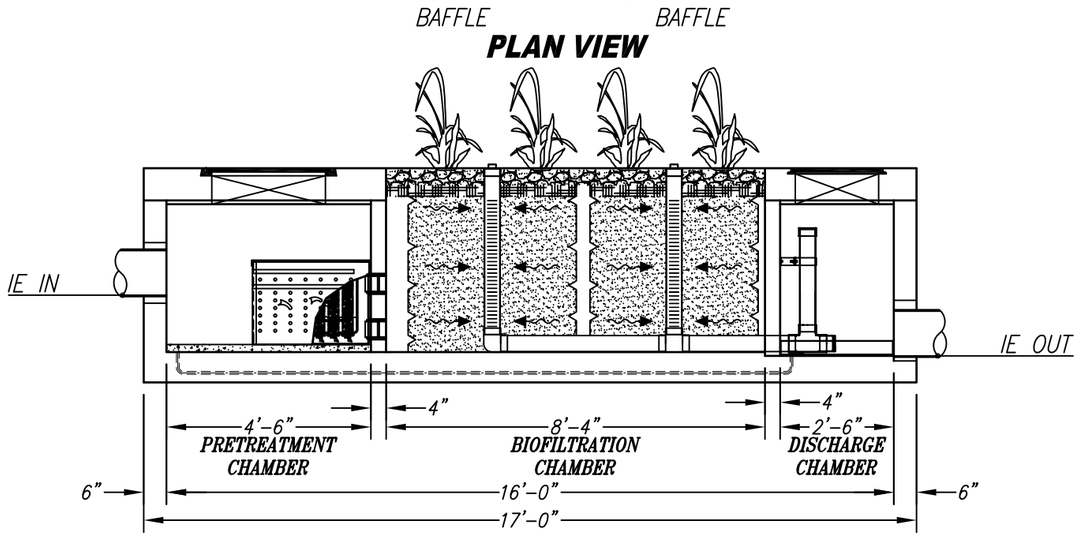

ELEVATION VIEW

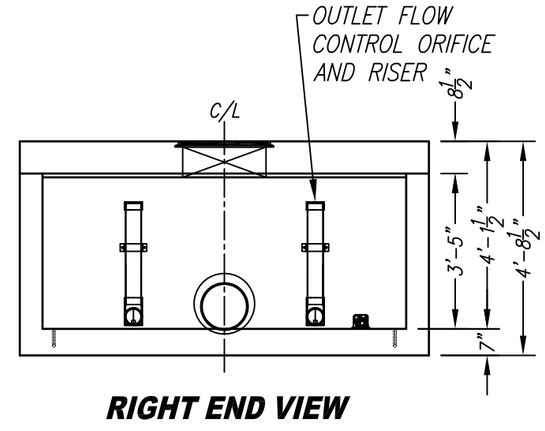

RIGHT END VIEW

BIOFILTRATION CHAMBER SURFACE AREA CALCS
SIDES = 4
3.7' L x 3.4' H = 12.58 SF
12.58 SF X 4 SIDES = 50.32
CELLS = 4
50.32 X 4 CELLS = 201.28
TOTAL WETLAND MEDIA SURFACE AREA **= 201.28 SF**
WETLAND MEDIA LOADING RATE 207.31 GPM / 201.28 SF **= 1.03 GPM/SF**
PRETREATMENT FILTER SURFACE AREA CALCS
TOTAL PRETREATMENT SURFACE AREA 25 SF x 5 FILTERS **= 125.00 SF**
PRETREATMENT FILTER LOADING RATE 207.31 GPM / 125.00 SF **= 1.66 GPM/SF**

LEGEND

- WETLAND MEDIA
- PLANT/ROOT MOISTURE RETENTION LAYER
- MANHOLE / ACCESS HATCH

INSTALLATION NOTES:

1. INSTALL UNIT ON LEVEL BED OF GRAVEL OF AT LEAST 6" IN DEPTH WITH 1' MINIMUM OVER EXCAVATION AROUND ENTIRE UNIT.
2. CONCRETE 28 DAY COMPRESSIVE STRENGTH fc=5,000 PSI.
3. REINFORCING: ASTM A-615, GRADE 60.
4. RATED FOR PARKWAY LOADING 300 PSF.
5. JOINT SEALANT: BUTYL RUBBER SS-S-00210

MODULAR WETLAND SYSTEMS INC.
P.O. BOX 869
OCEANSIDE, CA 92049
www.ModularWetlands.com

PROPRIETARY AND CONFIDENTIAL

THE INFORMATION CONTAINED IN THIS DRAWING IS THE SOLE PROPERTY OF MODULAR WETLAND SYSTEMS INC. ANY REPRODUCTION IN PART OR AS A WHOLE WITHOUT THE WRITTEN PERMISSION OF MODULAR WETLAND SYSTEMS INC. IS PROHIBITED.

	NAME	DATE
DRAWN		
REVIEWED		
APPROVED		

COMMENTS:

TITLE: MWS LINEAR 2.0 CURB TYPE

SIZE	DWG. NO.	REV
	MWS-L-8-16-V	

SCALE NTS | UNITS = INCHES | SHEET 1 OF 1

SITE SPECIFIC DATA			
PROJECT NUMBER			
PROJECT NAME			
PROJECT LOCATION			
STRUCTURE ID			
TREATMENT REQUIRED			
FLOW BASED (CFS)			
0.577			
PEAK BYPASS REQUIRED (CFS) – IF APPLICABLE			OFFLINE
PIPE DATA	I.E.	MATERIAL	DIAMETER
INLET PIPE 1			
INLET PIPE 2	N/A	N/A	N/A
OUTLET PIPE			
	PRETREATMENT	BIOFILTRATION	DISCHARGE
RIM ELEVATION			
SURFACE LOAD	PEDESTRIAN		
NOTES:			

* PRELIMINARY NOT FOR CONSTRUCTION

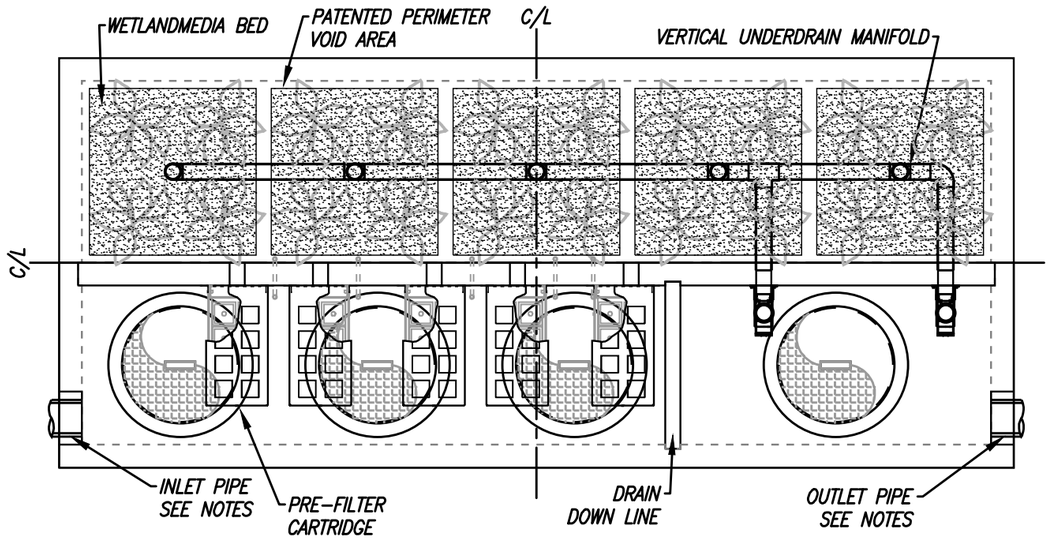

PLAN VIEW

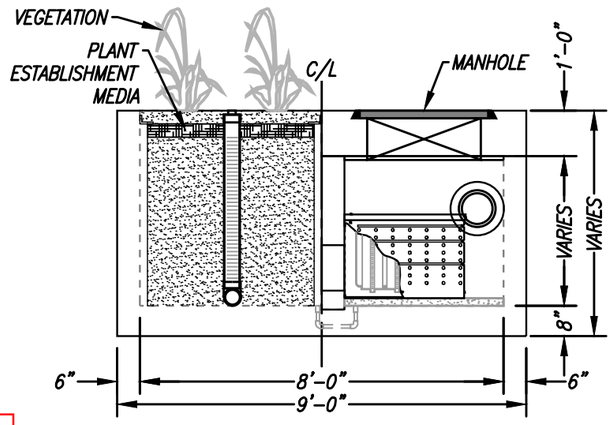

LEFT END VIEW

DMAs:
B4
E1
F5

Head - 3.4'

INSTALLATION NOTES

1. CONTRACTOR TO PROVIDE ALL LABOR, EQUIPMENT, MATERIALS AND INCIDENTALS REQUIRED TO OFFLOAD AND INSTALL THE SYSTEM AND APPURTENANCES IN ACCORDANCE WITH THIS DRAWING AND THE MANUFACTURERS' SPECIFICATIONS, UNLESS OTHERWISE STATED IN MANUFACTURER'S CONTRACT.
2. UNIT MUST BE INSTALLED ON LEVEL BASE. MANUFACTURER RECOMMENDS A MINIMUM 6" LEVEL ROCK BASE UNLESS SPECIFIED BY THE PROJECT ENGINEER. CONTRACTOR IS RESPONSIBLE FOR VERIFYING PROJECT ENGINEER'S RECOMMENDED BASE SPECIFICATIONS.
4. CONTRACTOR TO SUPPLY AND INSTALL ALL EXTERNAL CONNECTING PIPES. ALL PIPES MUST BE FLUSH WITH INSIDE SURFACE OF CONCRETE (PIPES CANNOT INTRUDE BEYOND FLUSH). INVERT OF OUTFLOW PIPE MUST BE FLUSH WITH DISCHARGE CHAMBER FLOOR. ALL PIPES SHALL BE SEALED WATERTIGHT PER MANUFACTURER'S STANDARD CONNECTION DETAIL.
5. CONTRACTOR RESPONSIBLE FOR INSTALLATION OF ALL PIPES, RISERS, MANHOLES, AND HATCHES. CONTRACTOR TO USE GROUT AND/OR BRICKS TO MATCH COVERS WITH FINISHED SURFACE UNLESS SPECIFIED OTHERWISE.
6. VEGETATION SUPPLIED AND INSTALLED BY OTHERS. ALL UNITS WITH VEGETATION MUST HAVE DRIP OR SPRAY IRRIGATION SUPPLIED AND INSTALLED BY OTHERS.
7. CONTRACTOR RESPONSIBLE FOR CONTACTING CONTECH FOR ACTIVATION OF UNIT. MANUFACTURER'S WARRANTY IS VOID WITHOUT PROPER ACTIVATION BY A CONTECH REPRESENTATIVE.

GENERAL NOTES

1. MANUFACTURER TO PROVIDE ALL MATERIALS UNLESS OTHERWISE NOTED.
2. ALL DIMENSIONS, ELEVATIONS, SPECIFICATIONS AND CAPACITIES ARE SUBJECT TO CHANGE. FOR PROJECT SPECIFIC DRAWINGS DETAILING EXACT DIMENSIONS, WEIGHTS AND ACCESSORIES PLEASE CONTACT CONTECH.

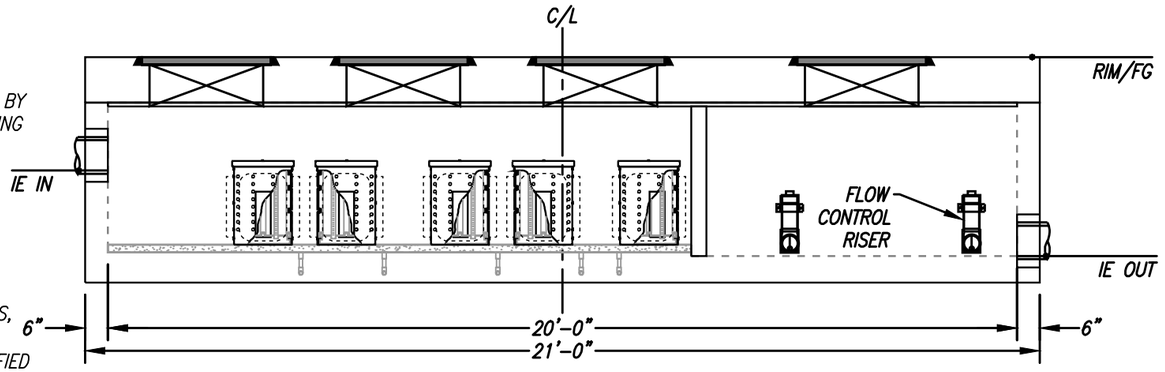

ELEVATION VIEW

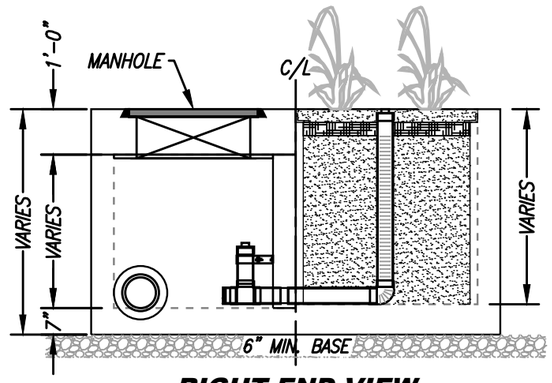

RIGHT END VIEW

TREATMENT FLOW (CFS)	0.577
OPERATING HEAD (FT)	3.4
PRETREATMENT LOADING RATE (GPM/SF)	2.0
WETLAND MEDIA LOADING RATE (GPM/SF)	1.0

MODULAR WETLANDS
FOR PATENT INFORMATION, GO TO www.ContechES.com/IP

CONTECH ENGINEERED SOLUTIONS LLC
www.ContechES.com

MWS-L-8-20-V
STORMWATER BIOFILTRATION SYSTEM
STANDARD DETAIL

SITE SPECIFIC DATA*	
PROJECT NAME	
PROJECT LOCATION	
STRUCTURE ID	

PERFORMANCE DATA	
TREATMENT FLOW (CFS)	
TREATMENT HGL (FT)	3.4
BYPASS FLOW RATE (CFS)	

PROJECT PARAMETERS			
PIPE DATA	I.E.	MATERIAL	DIAMETER
INLET PIPE 1		PVC	
OUTLET PIPE 1		PVC	
RIM ELEVATION			
SURFACE LOADING REQUIREMENT		PARKWAY	

FRAME & COVER	PRETREATMENT	BIOFILTRATION	DISCHARGE
	30"		24"

WETLANDMEDIA VOLUME (CY)	
MEDIA DELIVERED	
ORIFICE SIZE (DIA)	
MAX PICK WEIGHT (LBS)	

NOTES:

*PER ENGINEER OF RECORD

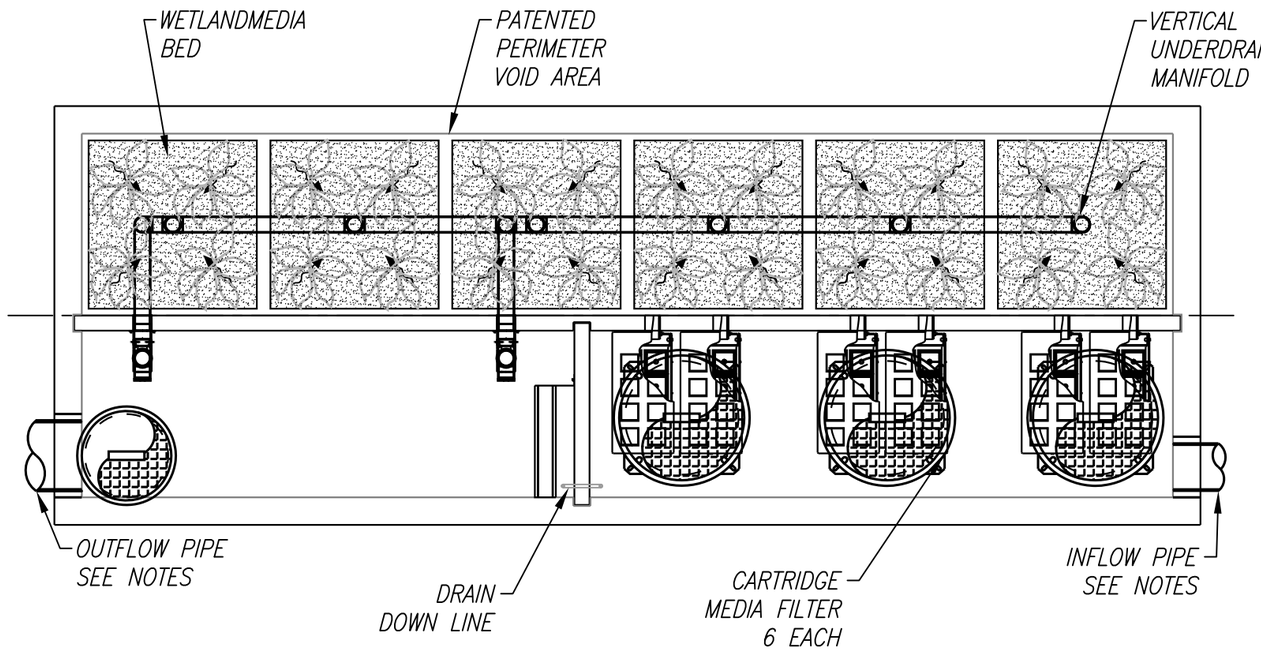

PLAN VIEW

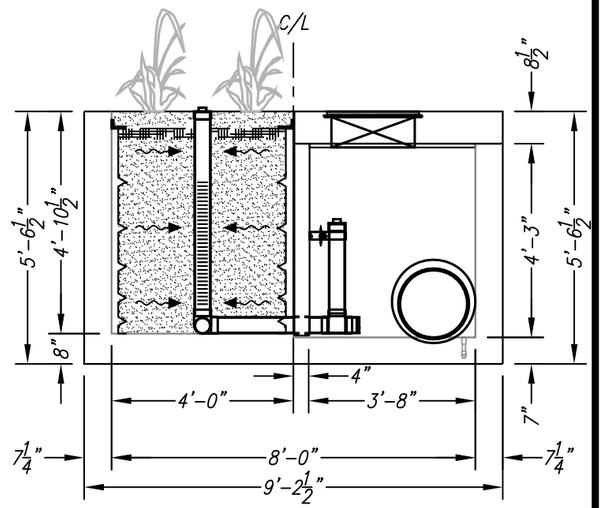

LEFT END VIEW

INSTALLATION NOTES

1. CONTRACTOR TO PROVIDE ALL LABOR, EQUIPMENT, MATERIALS AND INCIDENTALS REQUIRED TO OFFLOAD AND INSTALL THE SYSTEM AND APPURTENANCES IN ACCORDANCE WITH THIS DRAWING AND THE MANUFACTURERS SPECIFICATIONS, UNLESS OTHERWISE STATED IN MANUFACTURERS CONTRACT.
2. MANUFACTURER RECOMMENDS A MINIMUM 6"LEVEL ROCK BASE UNLESS SPECIFIED BY THE PROJECT ENGINEER. CONTRACTOR IS RESPONSIBLE TO VERIFY PROJECT ENGINEERS RECOMMENDED BASE SPECIFICATIONS.
3. ALL PIPES MUST BE FLUSH WITH INSIDE SURFACE OF CONCRETE. (PIPES CANNOT INTRUDE BEYOND FLUSH).
4. INVERT OF OUTFLOW PIPE MUST BE FLUSH WITH DISCHARGE CHAMBER FLOOR.
5. ALL GAPS AROUND PIPES SHALL BE SEALED WATER TIGHT WITH A NON-SHRINK GROUT PER MANUFACTURERS STANDARD CONNECTION DETAIL AND SHALL MEET OR EXCEED REGIONAL PIPE CONNECTION STANDARDS.
6. CONTRACTOR RESPONSIBLE FOR INSTALLATION OF ALL RISERS, MANHOLES, AND HATCHES. CONTRACTOR TO GROUT ALL MANHOLES AND HATCHES TO MATCH FINISHED SURFACE UNLESS SPECIFIED OTHERWISE.

GENERAL NOTES

1. MANUFACTURER TO PROVIDE ALL MATERIALS UNLESS OTHERWISE NOTED.
2. ALL DIMENSIONS, ELEVATIONS, SPECIFICATIONS AND CAPACITIES ARE SUBJECT TO CHANGE. FOR PROJECT SPECIFIC DRAWINGS DETAILING EXACT DIMENSIONS, WEIGHTS AND ACCESSORIES PLEASE CONTACT MANUFACTURER.

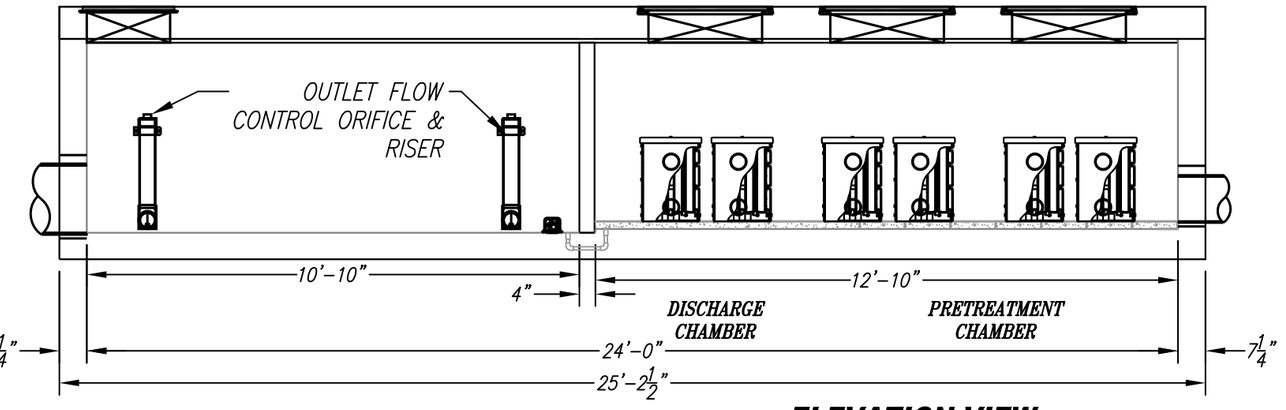

ELEVATION VIEW

DMAs:
B6
C1

Head - 3.4'

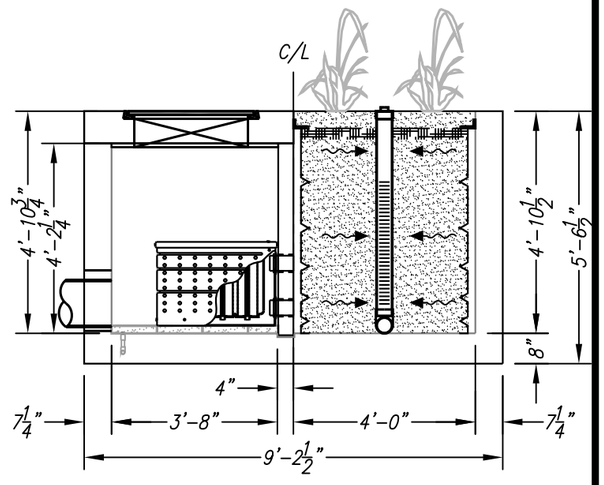

RIGHT END VIEW

MWS UNIT DESIGN DATA	
TREATMENT CAPACITY (CFS)	0.693
OPERATING HEAD (FT)	3.4
PRETREATMENT LOADING RATE (GPM/SF)	2.0
WETLAND LOADING RATE (GPM/SF)	1.0

THE PRODUCT DESCRIBED MAY BE PROTECTED BY ONE OR MORE OF THE FOLLOWING US PATENTS: 7,425,262; 7,470,362; 7,674,378; 8,303,816; RELATED FOREIGN PATENTS OR OTHER PATENTS PENDING

PROPRIETARY AND CONFIDENTIAL:

THE INFORMATION CONTAINED IN THIS DRAWING IS THE SOLE PROPERTY OF MODULAR WETLANDS SYSTEMS. ANY REPRODUCTION IN PART OR AS A WHOLE WITHOUT THE WRITTEN PERMISSION OF MODULAR WETLANDS SYSTEMS IS PROHIBITED.

MODULAR WETLANDS

MWS-L-8-24-V
STORMWATER BIOFILTRATION SYSTEM STANDARD DETAIL

4/8/15/JUSTIN

Section VII Educational Materials

Refer to the Orange County Stormwater Program (ocwatersheds.com) for a library of materials available. Please only attach the educational materials specifically applicable to this project. Other materials specific to the project may be included as well and must be attached.

Education Materials			
Residential Material (http://www.ocwatersheds.com)	**Check If Applicable**	**Business Material (http://www.ocwatersheds.com)**	**Check If Applicable**
The Ocean Begins at Your Front Door	☒	Tips for the Automotive Industry	☐
Tips for Car Wash Fund-raisers	☐	Tips for Using Concrete and Mortar	☐
Tips for the Home Mechanic	☐	Tips for the Food Service Industry	☐
Homeowners Guide for Sustainable Water Use	☒	Proper Maintenance Practices for Your Business	☐
Household Tips	☒	Other Materials (http://www.ocwatersheds.com) (https://www.casqa.org/resources/bmp-handbooks)	Check If Attached
Proper Disposal of Household Hazardous Waste	☒		
Recycle at Your Local Used Oil Collection Center (North County)	☒	DF-1 Drainage System Operation & Maintenance	☒
Recycle at Your Local Used Oil Collection Center (Central County)	☐	SD-32 Trash Storage Areas	☒
Recycle at Your Local Used Oil Collection Center (South County)	☐	R-2 Automobile Washing	☐
Tips for Maintaining Septic Tank Systems	☐	R-3 Automobile Parking	☐
Responsible Pest Control	☐	R-4 Home & Garden Care Activities	☐
Sewer Spill	☐	R-5 Disposal of Pet Waste	☒
Tips for the Home Improvement Projects	☐	R-6 Disposal of Green Waste	☐
Tips for Horse Care	☐	R-7 Household Hazardous Waste	☐
Tips for Landscaping and Gardening	☒	R-8 Water Conservation	☒
Tips for Pet Care	☒	SD-10 Site Design & Landscape Planning	☒
Tips for Pool Maintenance	☐	SD-11 Roof Runoff Controls	☒
Tips for Residential Pool, Landscape and Hardscape Drains	☐	SD-12 Efficient Irrigation	☒
Tips for Protecting Your Watershed	☒	SD-13 Storm Drain Signage	☒

ATTACHMENT A

SUPPORTING CALCULATIONS

Worksheet D: Capture Efficiency Method for Flow-Based BMPs

Project:

Date:

			DMA A	DMA B1	DMA B2.1	DMA B2.2	DMA B3	DMA B4	DMA B5	DMA B6	DMA B7	DMA C1	DMA C2	DMA C3	DMA D	DMA E1	DMA E2	DMA E3	DMA F1	DMA F2	DMA F3	DMA F4	DMA F5	DMA F6	DMA G	TOTAL	
Step 1: Determine the design capture storm depth used for calculating volume																											
1	Enter the time of concentration, T_c (min) (See Appendix IV.2)	T_c=	5.0	5.0	5.0	5.0	5.0	5.0	5.0	5.0	5.0	5.0	5.0	5.0	5.0	5.0	5.0	5.0	5.0	5.0	5.0	5.0	5.0	5.0	5.0	5.0	min
2	Using Figure III.4, determine the design intensity at which the estimated time of concentration (T_c) achieves 80% capture efficiency, I_1	I_1=	0.260	0.260	0.260	0.260	0.260	0.260	0.260	0.260	0.260	0.260	0.260	0.260	0.260	0.260	0.260	0.260	0.260	0.260	0.260	0.260	0.260	0.260	0.260	0.260	in/hr
3	Enter the effect depth of provided HSCs upstream, d_{HSC} (inches) (Worksheet A)	d_{HSC}=	0	0	0	0	0	0	0	0	0	0	0	0	0	0	0	0	0	0	0	0	0	0	0	0	inches
4	Enter capture efficiency corresponding to d_{HSC}, Y_2 (Worksheet A)	Y_2=	0%	0%	0%	0%	0%	0%	0%	0%	0%	0%	0%	0%	0%	0%	0%	0%	0%	0%	0%	0%	0%	0%	0%	0%	%
5	Using Figure III.4, determine the design intensity at which the time of concentration (T_c) achieves the upstream capture efficiency (Y_2), I_2	I_2=	0	0	0	0	0	0	0	0	0	0	0	0	0	0	0	0	0	0	0	0	0	0	0	0	in/hr
6	Determine the design intensity that must be provided by BMP, $I_{design} = I_1 - I_2$	I_{design}=	0.260	0.260	0.260	0.260	0.260	0.260	0.260	0.260	0.260	0.260	0.260	0.260	0.260	0.260	0.260	0.260	0.260	0.260	0.260	0.260	0.260	0.260	0.260	0.260	in/hr
Step 2: Calculate the design flowrate																											
1	Enter Project area tributary to BMP(s), *A* (acres)	A=	1.71	0.98	1.69	0.59	1.09	2.32	0.84	2.81	1.10	2.91	1.19	1.68	1.10	2.23	0.84	2.05	4.07	2.53	3.65	1.10	2.62	0.62	1.43	41.15	acres
2	Enter Project Imperviousness, *imp* (unitless)	imp=	90.0%	90.0%	90.0%	90.0%	90.0%	90.0%	90.0%	90.0%	90.0%	90.0%	90.0%	90.0%	90.0%	90.0%	90.0%	90.0%	90.0%	90.0%	90.0%	90.0%	90.0%	90.0%	90.0%	90.0%	%
3	Calculate runoff coefficient, *C = (0.75 x imp) + 0.15*	C=	0.825	0.825	0.825	0.825	0.825	0.825	0.825	0.825	0.825	0.825	0.825	0.825	0.825	0.825	0.825	0.825	0.825	0.825	0.825	0.825	0.825	0.825	0.825	0.825	
4	Calculate design flowrate, $Q_{design} = (C \times i_{design} \times A)$	Q_{design}=	0.367	0.210	0.363	0.127	0.234	0.498	0.180	0.603	0.236	0.624	0.255	0.360	0.236	0.478	0.180	0.440	0.873	0.543	0.783	0.236	0.562	0.133	0.307	8.827	cfs
Supporting Calculations																											
Describe System:																											
Proprietary BioTreatment (BIO-7):																											
Unit Size / Model =			*MWS-L-8-16*	*MWS-L-4-19*	*MWS-L-8-16*	*MWS-L-4-13*	*MWS-L-4-19*	*MWS-L-8-20*	*MWS-L-4-17*	*MWS-L-8-24*	*MWS-L-4-19*	*MWS-L-8-24*	*MWS-L-4-21*	*MWS-L-8-16*	*MWS-L-4-19*	*MWS-L-8-20*	*MWS-L-4-17*	*MWS-L-8-16*	*MWS-L-8-16*	*MWS-L-8-12*	*MWS-L-8-12*	*MWS-L-4-19*	*MWS-L-8-20*	*MWS-L-4-13*	*MWS-L-8-12*		
Unit Size / Model Treatment Capacity =			*0.462*	*0.237*	*0.462*	*0.144*	*0.237*	*0.577*	*0.206*	*0.693*	*0.237*	*0.693*	*0.268*	*0.462*	*0.237*	*0.577*	*0.206*	*0.462*	*0.462*	*0.346*	*0.346*	*0.237*	*0.577*	*0.144*	*0.346*		cfs
Number of Units Needed =			*1*	*1*	*1*	*1*	*1*	*1*	*1*	*1*	*1*	*1*	*1*	*1*	*1*	*1*	*1*	*1*	*2*	*1*	*2*	*1*	*1*	*1*	*1*		
Total Bio-treatment Provided =			*0.462*	*0.237*	*0.462*	*0.144*	*0.237*	*0.577*	*0.206*	*0.693*	*0.237*	*0.693*	*0.268*	*0.462*	*0.237*	*0.577*	*0.206*	*0.462*	*0.924*	*0.346*	*0.692*	*0.237*	*0.577*	*0.144*	*0.346*		cfs

Worksheet J: Summary of Harvested Water Demand and Feasibility

1	What demands for harvested water exist in the tributary area (check all that apply):			
2	Toilet and urinal flushing		X	
3	Landscape irrigation		X	
4	Other:_____			
5	What is the design capture storm depth? (Figure III.1)	d	0.75	inches
6	What is the project size?	A	41.13	ac
7	What is the acreage of impervious area?	IA	35.37	ac
For projects with multiple types of demand (toilet flushing, irrigation demand, and/or other demand)				
8	What is the minimum use required for partial capture? (Table X.6)		610	gpd
9	What is the project estimated wet season total daily use (Section X.2)?		1251	gpd
10	Is partial capture potentially feasible? (Line 9 > Line 8?)		YES	
For projects with only toilet flushing demand				
11	What is the minimum TUTIA for partial capture? (Table X.7)			
12	What is the project estimated TUTIA?			
13	Is partial capture potentially feasible? (Line 12 > Line 11?)			
For projects with only irrigation demand				
14	What is the minimum irrigation area required based on conservation landscape design? (Table X.8)			ac
15	What is the proposed project irrigated area? (multiply conservation landscaping by 1; multiply active turf by 2)			ac
16	Is partial capture potentially feasible? (Line 15 > Line 14?)			

Provide supporting assumptions and citations for controlling demand calculation:

Blend of High-Use and Low-Use Landscaping

Drainage Area / Land Use Type	Total Area (ac)	Total Area (sf)	% Impervious	Impervious (sf)	Eto	KL	Modified EAWU	Minimum EAWU/ Impervious Acre (Table X.6)
TOTAL	41.125	1,791,405	86%	1,540,608	2.93	0.55	6,735.98	610

EAWU = 190.5 gpd

Worksheet J: Summary of Harvested Water Demand and Feasibility

Table X.1: Toilet and Urinal Water Usage per Resident or Employee

Land Use Type	Toilet User Unit of Normalization	Per Capita Use per Day		Visitor Factor[4]	Water Efficiency Factor	Total Use
		Toilet Flushing [1,2]	Urinals[3]			
Residential	Resident	18.5	NA	NA	0.5	9.3
Office	Employee (non-visitor)	9.0	2.27	1.1	0.5	7 (avg)
Retail	Employee (non-visitor)	9.0	2.11	1.4	0.5	

Specific Plan Land Use Summary		
Land Use	**Proposed Development**	**Existing Development**
Residential	3,750 du	0
Senior Living/Continuum of Care	200 units	0
Hotel	250 keys	0
Commercial	350,000 gsf	465,063 sf
Open Space (Common)	13.1 acres	0
du = dwelling unit; gsf = gross square feet; sf = square feet		

EAWU = (9.3 x 3,750)[resident] + (9.3 x 250)[hotel] + (9.3 x 200)[senior living] + (7 x 100)[commercial] = 37,500 = 1060 gpd

TOTAL EAWU = 1251 gpd

Table X.6: Harvested Water Demand Thresholds for Minimum Partial Capture

Design Capture Storm Depth[1], inches	Wet Season Demand Required for Minimum Partial Capture, gpd per impervious acre
0.60	490
0.65	530
0.70	570
0.75	610
0.80	650
0.85	690
0.90	730
0.95	770

Design Capture Storm Depth[1], inches	Wet Season Demand Required for Minimum Partial Capture, gpd per impervious acre
1.00	810

1- Based on isopluvial map (See XIV.1)

Table X.8: Minimum Irrigated Area for Potential Partial Capture Feasibility

General Landscape Type	Conservation Design: K_L = 0.35			Active Turf Areas: K_L = 0.7		
Closest ET Station	*Irvine*	*Santa Ana*	*Laguna*	*Irvine*	*Santa Ana*	*Laguna*
Design Capture Storm Depth, inches	**Minimum Required Irrigated Area per Tributary Impervious Acre for Potential Partial Capture, ac/ac**					
0.60	0.66	0.68	0.72	0.33	0.34	0.36
0.65	0.72	0.73	0.78	0.36	0.37	0.39
0.70	0.77	0.79	0.84	0.39	0.39	0.42
0.75	0.83	0.84	0.90	0.41	0.42	0.45
0.80	0.88	0.90	0.96	0.44	0.45	0.48
0.85	0.93	0.95	1.02	0.47	0.48	0.51
0.90	0.99	1.01	1.08	0.49	0.51	0.54
0.95	1.04	1.07	1.14	0.52	0.53	0.57
1.00	1.10	1.12	1.20	0.55	0.56	0.60

Worksheet I: Summary of Groundwater-related Feasibility Criteria

1	Is project large or small? (as defined by Table VIII.2) circle one	(Large)		Small
2	What is the tributary area to the BMP?	A	41.1	acres
3	What type of BMP is proposed?	PENDING		
4	What is the infiltrating surface area of the proposed BMP?	A_{BMP}	PENDING	sq-ft
5	What land use activities are present in the tributary area (list all) Residential & Commercial			
6	What land use-based risk category is applicable?	L	(M)	H
7	If M or H, what pretreatment and source isolation BMPs have been considered and are proposed (describe all): PENDING			
8	What minimum separation to mounded seasonally high groundwater applies to the proposed BMP? See Section VIII.2 (circle one)	(5 ft)		10 ft
9	Provide rationale for selection of applicable minimum separation to seasonally high mounded groundwater: The separation between the infiltrating surface and the seasonally high mounded groundwater table shall not be less than 5 feet for all BMP types. BMPs for which 5-foot minimum separation applies include: - Rain gardens and dispersion trenches (small, residential applications) - Bioretention and planters - Permeable Pavement - Similar BMPs infiltrating over an extensive surface area and providing robust pretreatment or embedded treatment processes.			
10	What is separation from the infiltrating surface to seasonally high groundwater?	SHGWT	< 5	ft
11	What is separation from the infiltrating surface to mounded seasonally high groundwater?	Mounded SHGWT	< 5	ft
12	Describe assumptions and methods used for mounding analysis: Based on the historical groundwater elevation being 5' bgs, it is not feasible to have greater than 5' of separation between the infiltrating surface and the seasonally high mounded groundwater table.			

Worksheet I: Summary of Groundwater-related Feasibility Criteria

13	Is the site within a plume protection boundary (See Figure VIII.2)?	Y (N) N/A
14	Is the site within a selenium source area or other natural plume area (See Figure VIII.2)?	Y (N) N/A
15	Is the site within 250 feet of a contaminated site?	Y (N) N/A
16	If site-specific study has been prepared, provide citation and briefly summarize relevant findings: Per the Preliminary Geotechnical Investigation Report by Group Delta on August 3, 2022, "Historic highest groundwater at the site has been mapped at a depth of about 5 feet bgs. Groundwater was encountered during the current preliminary site investigation between a depth of 12 feet and 16 feet bgs. Groundwater levels measured during the geotechnical investigations are a "snapshot" of the groundwater level and do not account for potential fluctuations in groundwater level due to seasonal and tidal variations."	
17	Is the site within 100 feet of a water supply well, spring, septic system?	Y (N) N/A
18	Is infiltration feasible on the site relative to groundwater-related criteria?	Y (N)

Provide rationale for feasibility determination:

Infiltration is infeasible on the site relative to groundwater related criteria due to the Preliminary Geotechnical Investigation Report by Group Delta determining that the historic highest groundwater at the site is 5 ft bgs and the minimum separation from infiltration surface to mounded groundwater requiring at least 5 ft.

Table 2.7: Infiltration BMP Feasibility Worksheet

	Infeasibility Criteria	***Yes***	***No***
1	**Would Infiltration BMPs pose significant risk for groundwater related concerns?** Refer to Appendix VII (Worksheet I) for guidance on groundwater-related infiltration feasibility criteria.	X	
Provide basis: Based on Worksheet I, infiltration is infeasible on the site relative to groundwater related criteria due to the Preliminary Geotechnical Investigation Report by Group Delta determining that the historic highest groundwater at the site is 5 ft bgs and the minimum separation from infiltration surface to mounded groundwater requiring at least 5 ft. As a result, infiltration BMPs would pose a significant risk for groundwater related concerns. Summarize findings of studies provide reference to studies, calculations, maps, data sources, etc. Provide narrative discussion of study/data source applicability.			
2	Would Infiltration BMPs **pose significant risk of increasing risk of geotechnical hazards that cannot be mitigated to an acceptable level**? (Yes if the answer to any of the following questions is yes, as established by a geotechnical expert): The BMP can only be located less than 50 feet away from slopes steeper than 15 percent The BMP can only be located less than eight feet from building foundations or an alternative setback. A study prepared by a geotechnical professional or an available watershed study substantiates that stormwater infiltration would potentially result in significantly increased risks of geotechnical hazards that cannot be mitigated to an acceptable level.		X
Provide basis: Infiltration BMPs would not pose significant risk of increasing risk of geotechnical hazards. Summarize findings of studies provide reference to studies, calculations, maps, data sources, etc. Provide narrative discussion of study/data source applicability.			
3	Would infiltration of the DCV from drainage area **violate downstream water rights**?		X

Provide basis: Infiltration of the DCV from the drainage area does not violate downstream water rights. Summarize findings of studies provide reference to studies, calculations, maps, data sources, etc. Provide narrative discussion of study/data source applicability.

Table 2.7: Infiltration BMP Feasibility Worksheet (continued)

	Partial Infeasibility Criteria	***Yes***	***No***
4	Is proposed infiltration facility **located on HSG D soils** or the site geotechnical investigation identifies presence of soil characteristics which support categorization as D soils?		X
Provide basis: The proposed infiltration facility is not located on HSG D soils, but Per the Preliminary Geotechnical Investigation Report by Group Delta on August 3, 2022, “The onsite soils above the groundwater typically consist of lean clay materials and based on the percolation test results are not suitable for infiltration.” Summarize findings of studies provide reference to studies, calculations, maps, data sources, etc. Provide narrative discussion of study/data source applicability.			
5	Is **measured infiltration rate below proposed facility less than 0.3 inches per hour**? This calculation shall be based on the methods described in Appendix VII.	X	

Table 2.7: Infiltration BMP Feasibility Worksheet (continued)

Provide basis:
The proposed infiltration facility is not located on HSG D soils, but Per the Preliminary Geotechnical Investigation Report by Group Delta on August 3, 2022, "The onsite soils above the groundwater typically consist of lean clay materials and based on the percolation test results are not suitable for infiltration." Below is a summary table of the onsite measured infiltration rates from the Geotechnical Investigation.

Table 2. Field Unfactored Infiltration Rates

Test ID (Boring)	Approximate Ground Elevation (feet)	Location	Field Infiltration Rate (in/hr)	Predominant Soil Type	Bottom of test hole Elevation (feet)	Depth of Test Interval (feet)
P-1	34	Boring B-1	<0.1	Lean Clay (CL)	29	0 to 5
P-2	33	CPT C-2	<0.1	Lean Clay (CL)	28	0 to 5
P-5	34	Boring B-5	<0.1	Lean Clay (CL)	29	0 to 5
P-6	34	CPT C-6	<0.1	Lean Clay (CL)	29	0 to 5

Summarize findings of studies provide reference to studies, calculations, maps, data sources, etc. Provide narrative discussion of study/data source applicability.

6	Would **reduction of over predeveloped conditions cause impairments to downstream beneficial uses, such as change of seasonality of ephemeral washes or increased discharge of contaminated groundwater to surface waters?**		X

Provide citation to applicable study and summarize findings relative to the amount of infiltration that is permissible:
Reduction of over predeveloped conditions would not cause impairments to downstream beneficial uses, such as change of seasonality of ephemeral washes or increased discharge of contaminated groundwater to surface waters.

Summarize findings of studies provide reference to studies, calculations, maps, data sources, etc. Provide narrative discussion of study/data source applicability.

7	Would **an increase in infiltration over predeveloped conditions cause impairments to downstream beneficial uses, such as change of seasonality of ephemeral washes or increased discharge of contaminated groundwater to surface waters?**		X

Table 2.7: Infiltration BMP Feasibility Worksheet (continued)

Provide citation to applicable study and summarize findings relative to the amount of infiltration that is permissible: An increase in infiltration over predeveloped conditions would not cause impairments to downstream beneficial uses, such as change of seasonality of ephemeral washes or increased discharge of contaminated groundwater to surface waters. Summarize findings of studies provide reference to studies, calculations, maps, data sources, etc. Provide narrative discussion of study/data source applicability.		
Infiltration Screening Results (check box corresponding to result):		
8	Is there substantial evidence that infiltration from the project would result in a significant increase in I&I to the sanitary sewer that cannot be sufficiently mitigated? (See Appendix XVII) Provide narrative discussion and supporting evidence: Infiltration from the project would not result in a significant increase in I&I to the sanitary sewer. Summarize findings of studies provide reference to studies, calculations, maps, data sources, etc. Provide narrative discussion of study/data source applicability.	
9	If any answer from row 1-3 is yes: infiltration of any volume is **not feasible** within the DMA or equivalent. Provide basis: Due to high historic groundwater and very poor infiltration rates, infiltration is infeasible for the project site. Summarize findings of infeasibility screening	X
10	If any answer from row 4-7 is yes, infiltration is **permissible but is not presumed to be feasible for the entire DCV.** Criteria for designing biotreatment BMPs to achieve the maximum feasible infiltration and ET shall apply. Provide basis: Summarize findings of infeasibility screening	

Table 2.7: Infiltration BMP Feasibility Worksheet (continued)

11	If all answers to rows 1 through 11 are no, infiltration of the full DCV is potentially feasible, BMPs must be designed to infiltrate the full DCV to the maximum extent practicable.	

SUBJECT TO FURTHER REVISION

PROJECT LOCATION

LEGEND

- Orange County Precipitation Stations
- 24 Hour, 85th Percentile Rainfall (Inches)
- 24 Hour, 85th Percentile Rainfall (Inches) - Extrapolated
- City Boundaries

Rainfall Zones

Design Capture Storm Depth (inches)

- 0.65"
- 0.7
- 0.75
- 0.80
- 0.85
- 0.90
- 0.95
- 1.00
- 1.10"

Note: Events defined as 24-hour periods (calendar days) with greater than 0.1 inches of rainfall.
For areas outside of available data coverage, professional judgment shall be applied.

0 3 6 12 Kilometers

0 1.8 3.6 7.2 Miles

TITLE: RAINFALL ZONES

JOB: ORANGE COUNTY TECHNICAL GUIDANCE DOCUMENT — ORANGE CO. CA

SCALE	1" = 1.8 miles
DESIGNED	TH
DRAWING	TH
CHECKED	BMP
DATE	04/22/10
JOB NO.	9526-E

PACE Advanced Water Engineering

FIGURE XVI-1

P:\9526E\6-GIS\Mxds\Reports\InfiltrationFeasability_20110215\9526E_FigureXVI-1_RainfallZones_20110215.mxd

SUBJECT TO FURTHER REVISION

PROJECT LOCATION

LOS ANGELES COUNTY
ORANGE COUNTY

SAN BERNARDINO COUNTY
ORANGE COUNTY

RIVERSIDE COUNTY
ORANGE COUNTY

LOS ANGELES COUNTY
ORANGE COUNTY

LEGEND

City Boundaries

Hydrologic Soil Groups

- A Soils
- B Soils
- C Soils
- D Soils

Source:
Soils: Natural Resources Conservation Service (NRCS)
Soil Survey - soil_ca678, Orange County & Western Riverside
Date of publication: 2006-02-08
http://websoilsurvey.nrcs.usda.gov/app/HomePage.htm

0 2.5 5 10 Kilometers
0 1.8 3.6 7.2 Miles

TITLE
NRCS HYDROLOGIC SOILS GROUPS

JOB
ORANGE COUNTY INFILTRATION STUDY
CA
ORANGE CO.

SCALE	1" = 1.8 miles
DESIGNED	TH
DRAWING	TH
CHECKED	BMP
DATE	02/09/11
JOB NO.	9526-E

PACE
Advanced Water Engineering

FIGURE
XVI-2a

P:\9526E\6-GIS\Mxds\Reports\InfiltrationFeasability_20110215\9526E_FigureXVI-2a_HydroSoils_20110215.mxd

SUBJECT TO FURTHER REVISION

PROJECT LOCATION

LEGEND

City Boundaries

Hydrologic Soil Groups

D Soils

Source:
D Soils: Natural Resources Conservation Service (NRCS)
Soil Survey - soil_ca678, Orange County & Western Riverside
Date of publication: 2006-02-08
http://websoilsurvey.nrcs.usda.gov/app/HomePage.htm

0 2.5 5 10 Kilometers

0 1.8 3.6 7.2 Miles

TITLE: HYDROLOGIC SOIL GROUP TYPE D NRCS SOIL SURVEY

ORANGE COUNTY INFILTRATION STUDY

CA

JOB: ORANGE CO.

SCALE	1" = 1.8 miles
DESIGNED	TH
DRAWING	TH
CHECKED	BMP
DATE	02/09/11
JOB NO.	9526-E

PACE Advanced Water Engineering

FIGURE

XVI-2b

P:\9526E\6-GIS\Mxds\Reports\InfiltrationFeasability_20110215\9526E_FigureXVI-2b_D-Soils_20110215.mxd

SUBJECT TO FURTHER REVISION

PROJECT LOCATION

LEGEND

City Boundaries

Seismic Hazards

Potential Landslide Area

Source:
Seismic Hazard Zone Maps
Division of Mines and Geology, California Geology Survey,
Publication Date: 2005; Data Downloaded 02-09-2011
http://www.conservation.ca.gov/cgs/shzp/Pages/Index.aspx

LOS ANGELES COUNTY
ORANGE COUNTY
SAN BERNARDINO COUNTY
ORANGE COUNTY
RIVERSIDE COUNTY
ORANGE COUNTY
LOS ANGELES COUNTY
ORANGE COUNTY

Pacific Ocean
San Pedro Channel
Pacific Ocean

0 2.5 5 10 Kilometers
0 1.8 3.6 7.2 Miles

TITLE
HYDROLOGIC SOIL GROUP
TYPE D NRCS SOIL SURVEY

JOB
ORANGE COUNTY
INFILTRATION STUDY
CA
ORANGE CO.

SCALE	1" = 1.25 miles
DESIGNED	TH
DRAWING	TH
CHECKED	BMP
DATE	02/09/11
JOB NO.	9526-E

PACE
Advanced Water Engineering

FIGURE
XVI-2c

P:\9526E\16-GIS\Mxds\Reports\InfiltrationFeasability_20110215\9526E_FigureXVI-2c_Landslides_20110215.mxd

SUBJECT TO FURTHER REVISION

LEGEND

- Depth To First Groundwater Contours
- City Boundaries
- OCWD Groundwater Basin Protection Boundary

Note: Data are not available for South Orange County at this time.

Source:
Sprotte, Fuller and Greenwood, 1980.
California Division of Mines and Geology;
California Geological Survey

PROJECT LOCATION

LOS ANGELES COUNTY
ORANGE COUNTY
SAN BERNARDINO COUNTY
RIVERSIDE COUNTY

0 2 4 8 Kilometers
0 1.25 2.5 5 Miles

TITLE
NORTH ORANGE COUNTY
MAPPED DEPTH TO FIRST
GROUNDWATER

JOB
ORANGE CO.
ORANGE COUNTY
INFILTRATION STUDY
CA

SCALE	1" = 1.25 miles
DESIGNED	TH
DRAWING	TH
CHECKED	BMP
DATE	02/09/11
JOB NO.	9526-E

PACE
Advanced Water Engineering

FIGURE
XVI-2d

P:\9526E\6-GIS\Mxds\Reports\InfiltrationFeasability_20110215\9526E_FigureXVI-2d_DepthToGroundwaterOverview_20110215.mxd

SUBJECT TO FURTHER REVISION

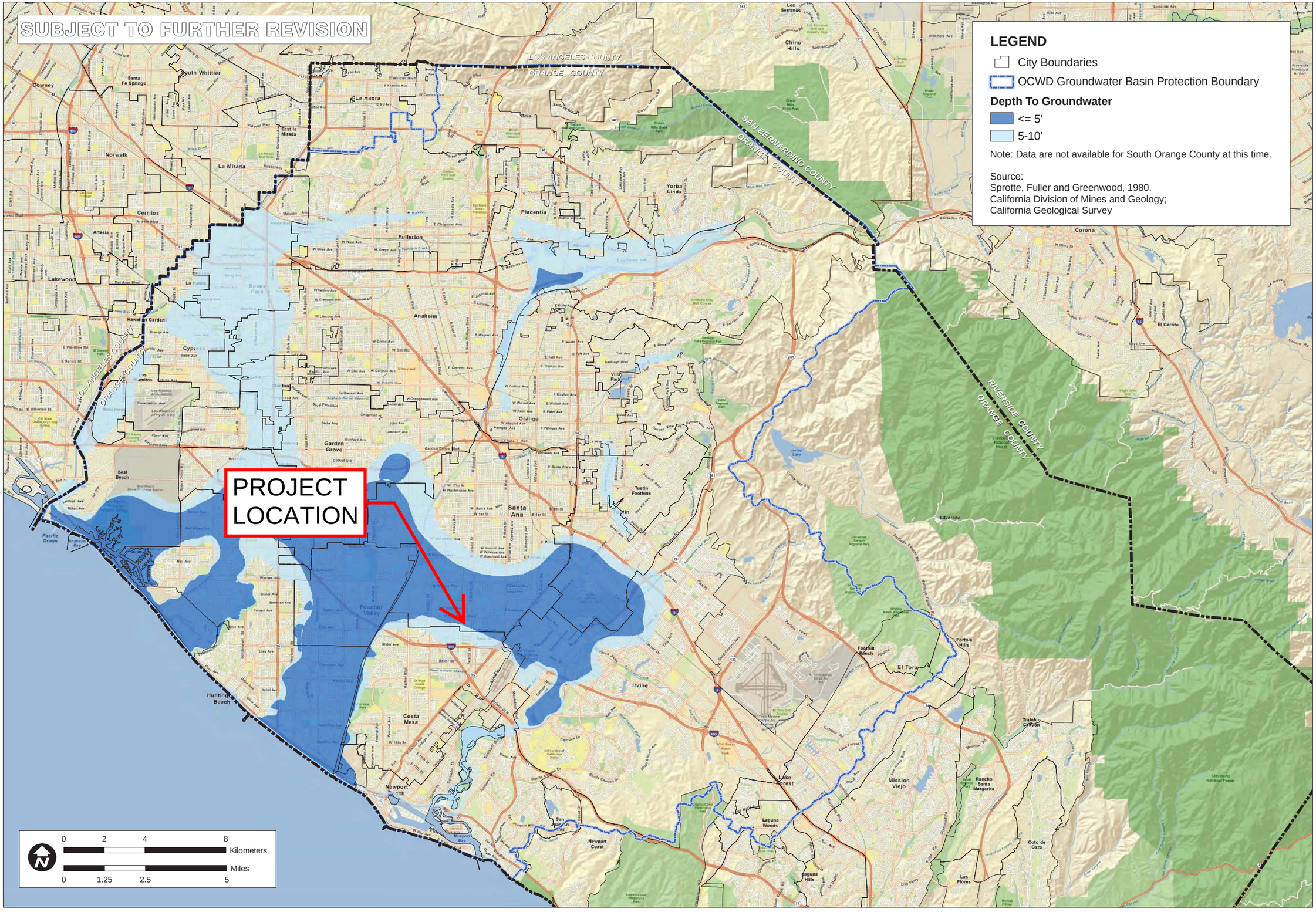

LEGEND

- City Boundaries
- OCWD Groundwater Basin Protection Boundary

Depth To Groundwater

- <= 5'
- 5-10'

Note: Data are not available for South Orange County at this time.

Source:
Sprotte, Fuller and Greenwood, 1980.
California Division of Mines and Geology;
California Geological Survey

TITLE
NORTH ORANGE COUNTY
MAPPED SHALLOW GROUNDWATER

ORANGE COUNTY
INFILTRATION STUDY

JOB
ORANGE CO.

SCALE	1" = 1.25 miles
DESIGNED	TH
DRAWING	TH
CHECKED	BMP
DATE	02/09/11
JOB NO.	9526-E

CA

PACE
Advanced Water Engineering

FIGURE
XVI-2e

P:\9526E\16-GIS\Mxds\Reports\Infiltration\Feasability_20110215\9526E_FigureXVI-2e_DepthToGroundwaterLt5ft_20110215.mxd

SUBJECT TO FURTHER REVISION

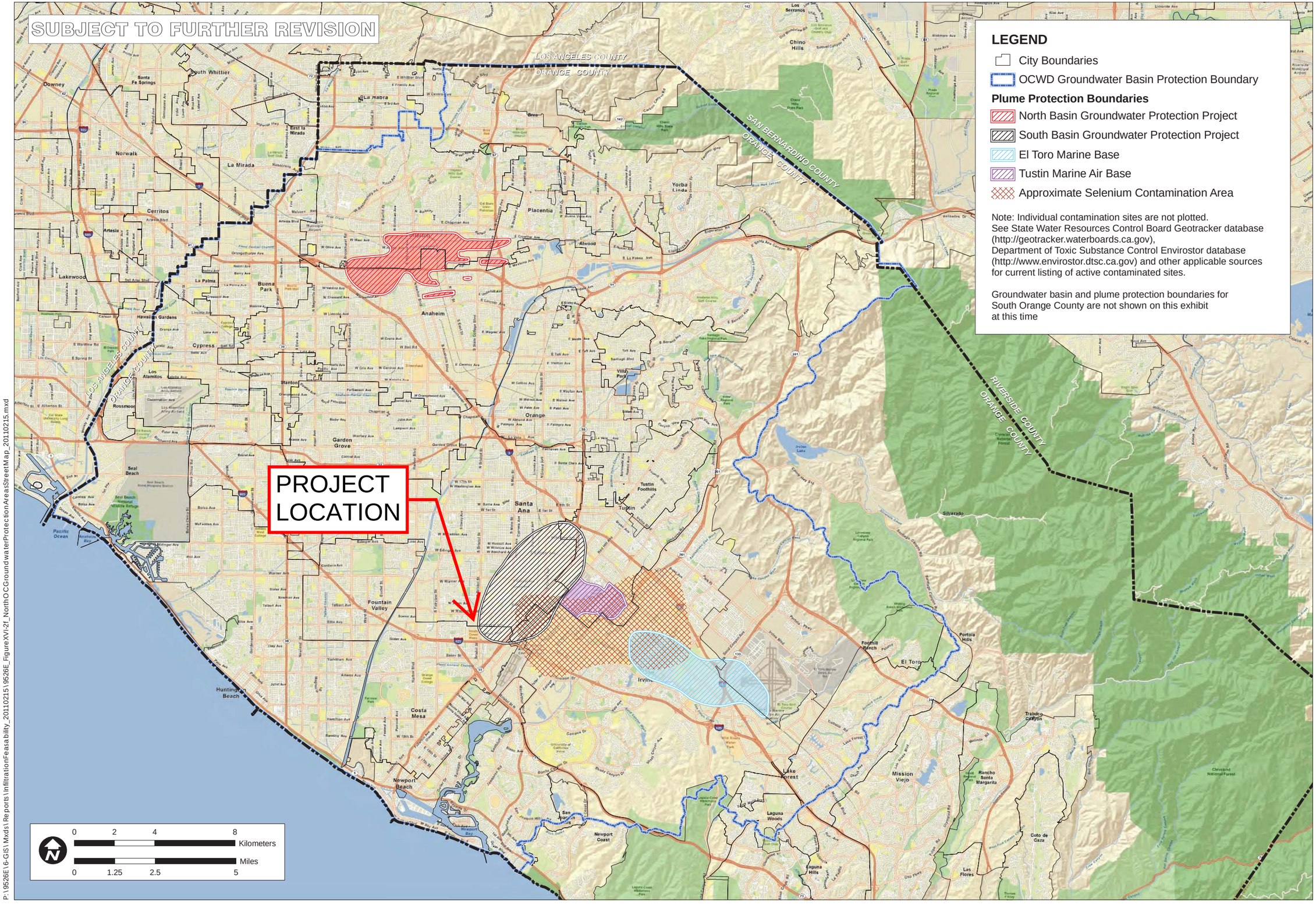

LEGEND

- City Boundaries
- OCWD Groundwater Basin Protection Boundary

Plume Protection Boundaries

- North Basin Groundwater Protection Project
- South Basin Groundwater Protection Project
- El Toro Marine Base
- Tustin Marine Air Base
- Approximate Selenium Contamination Area

Note: Individual contamination sites are not plotted.
See State Water Resources Control Board Geotracker database (http://geotracker.waterboards.ca.gov), Department of Toxic Substance Control Envirostor database (http://www.envirostor.dtsc.ca.gov) and other applicable sources for current listing of active contaminated sites.

Groundwater basin and plume protection boundaries for South Orange County are not shown on this exhibit at this time

TITLE
NORTH ORANGE COUNTY GROUNDWATER PROTECTION AREAS

JOB
ORANGE COUNTY INFILTRATION STUDY
ORANGE CO. CA

SCALE	1" = 1.25 miles
DESIGNED	TH
DRAWING	TH
CHECKED	BMP
DATE	04/22/10
JOB NO.	9526-E

PACE Advanced Water Engineering

FIGURE
XVI-2f

P:\9526E\16-GIS\Mxds\Reports\InfiltrationFeasability_20110215\9526E_FigureXVI-2f_NorthOCGroundwaterProtectionAreasStreetMap_20110215.mxd

SUBJECT TO FURTHER REVISION

PROJECT LOCATION

LEGEND

- OCWD Groundwater Basin Protection Boundary
- City Boundaries

Infiltration Constraints

- 1 Constraint
- 2 Overlapping Constraints
- 3 Overlapping Constraints
- 4 Overlapping Constraints

Analysis Layers Included: 1. Hydrologic Soil Group D, 2. Landslide Hazard Zone, 3. Groundwater Protection Areas 4. Approximate Selinium Area, 5. Depth to Groundwater <= 5'

Note: Screening datasets are not exhaustive. The applicant should always conduct a review of available site-specific information relative to infiltration constraints as part of assessing the feasibility of stormwater infiltration.
Source;
Infiltration Constraint Analysis: PACE/Geosyntec

0 2.5 5 10 Kilometers

0 1.8 3.6 7.2 Miles

TITLE: INFILTRATION ANALYSIS OVERLAPPING CONSTRAINT LOCATIONS

JOB: ORANGE COUNTY INFILTRATION STUDY — ORANGE CO. CA

SCALE	1" = 1.8 miles
DESIGNED	TH
DRAWING	TH
CHECKED	BMP
DATE	04/22/10
JOB NO.	9526-E

PACE Advanced Water Engineering

FIGURE XVI-2g

P:\9526E\6-GIS\Mxds\Reports\InfiltrationFeasability_20110215\9526E_FigureXVI-2g_InfiltrationFinal_20110215.mxd

SUSCEPTIBILITY MAP UPATE (FEB 2013)

Susceptibility

Potential Areas of Erosion, Habitat, & Physical Structure Susceptibility

Channel Type

Earth (Unstable)
Earth (Stabilized)
Stabilized

Tidal Influence

<= Mean High Water Line (4.28')

Water Body

Basin
Dam
Lake
Reservoir

Other Lands

Airport/Military

PROJECT LOCATION

AnaheimBay-HuntingtonHarbor Watershed

Santa Ana River Watershed

Santa Ana River Watershed

South Orange County

El Modena-Irvine Retarding Basin
Lower Peters Canyon Retarding Basin
Eastfoot Retarding Basin
Orchard Estates Retention Basin
Hicks Canyon Retarding Basin
Rattlesnake Reservoir
East Hicks Canyon Retarding Basin
Siphon Reservoir
Bee Canyon Retarding Basin
Round Canyon Retarding Basin
Trabuco Retarding Basin
Marshburn Retarding Basin
Agua Chinon Retarding Basin
North Lake
South Lake
Basin Number 2
Basin Number 1
Sand Canyon Reservoir
Laguna Reservoir
Bonita Canyon Reservoir
San Joaquin Reservoir
Big Canyon Reservoir
Harbor View Dam
Village Pond Park
John Wayne Airport

Feet
0 9,000 18,000

TITLE
SUSCEPTIBILITY ANALYIS
NEWPORT BAY-
NEWPORT COASTAL STREAMS

JOB
ORANGE COUNTY
WATERSHED
MASTER PLANNING
ORANGE CO.
CA

SCALE	1" = 12000'
DESIGNED	TH
DRAWING	TH
CHECKED	BMP
DATE	04/30/10
JOB NO.	9526-E

PACE
Advanced Water Engineering

FIGURE
4

P:\9526E\16-GIS\Mxds\SuceptabilityMaps_20100505\9526E_NewportBaySusceptibility_20100430.mxd

ATTACHMENT B

NOTICE OF TRANSFER OF RESPONSIBILITY

NOTICE OF TRANSFER OF RESPONSIBILITY

WATER QUALITY MANAGEMENT PLAN

Bristol Commons
Assessor Parcel Numbers [APNs] 412-131-12, 412-131-13, 412-131-14, 412-131-16, 412-131-17, 412-131-22, 412-131-24, 412-131-25 and 412-131-26

Submission of this Notice Of Transfer of Responsibility constitutes notice to the City of Santa Ana that responsibility for the Water Quality Management Plan ("WQMP") for the subject property identified below, and implementation of that plan, is being transferred from the Previous Owner (and his/her agent) of the site (or a portion thereof) to the New Owner, as further described below.

I. Previous Owner/ Previous Responsible Party Information

Company/ Individual Name:		Contact Person:	
Street Address:		Title:	
City:	State:	ZIP:	Phone:

II. Information about Site Transferred

Name of Project (if applicable):	
Title of WQMP Applicable to site:	
Street Address of Site (if applicable):	
Planning Area (PA) and/ or Tract Number(s) for Site:	Lot Numbers (if Site is a portion of a tract):
Date WQMP Prepared (and revised if applicable):	

III. New Owner/ New Responsible Party Information

Company/ Individual Name:		Contact Person:	
Street Address:		Title:	
City:	State:	ZIP:	Phone:

IV. Ownership Transfer Information

General Description of Site Transferred to New Owner:	General Description of Portion of Project/ Parcel Subject to WQMP Retained by Owner (if any):
Lot/ Tract Numbers of Site Transferred to New Owner:	
Remaining Lot/ Tract Numbers Subject to WQMP Still Held by Owner (if any):	
Date of Ownership Transfer:	

Note: When the Previous Owner is transferring a Site that is a portion of a larger project/ parcel addressed by the WQMP, as opposed to the entire project/parcel addressed by the WQMP, the General Description of the Site transferred and the remainder of the project/ parcel no transferred shall be set forth as maps attached to this notice. These maps shall show those portions of a project/ parcel addressed by the WQMP that are transferred to the New Owner (the Transferred Site), those portions retained by the Previous Owner, and those portions previously transferred by Previous Owner. Those portions retained by Previous Owner shall be labeled as "Previously Transferred".

V. Purpose of Notice of Transfer

The purposes of this Notice of Transfer of Responsibility are: 1) to track transfer of responsibility for implementation and amendment of the WQMP when property to which the WQMP is transferred from the Previous Owner to the New Owner, and 2) to facilitate notification to a transferee of property subject to a WQMP that such New Order is now the Responsible Party of record for the WQMP for those portions of the site that it owns.

VI. Certifications

A. Previous Owner

I certify under penalty of law that I am no longer the owner of the Transferred Site as described in Section II above. I have provided the New Owner with a copy of the WQMP applicable to the Transferred Site that the New Owner is acquiring from the Previous Owner.

Printed Name of Previous Owner Representative:	Title:
Signature of Previous Owner Representative:	Date:

B. New Owner

I certify under penalty of law that I am the owner of the Transferred Site, as described in Section II above, that I have been provided a copy of the WQMP, and that I have informed myself and understand the New Owner's responsibilities related to the WQMP, its implementation, and Best Management Practices associated with it. I understand that by signing this notice, the New Owner is accepting all ongoing responsibilities for implementation and amendment of the WQMP for the Transferred Site, which the New Owner has acquired from the Previous Owner.

Printed Name of New Owner Representative:	Title:

Signature:	Date:

ATTACHMENT C

EDUCATIONAL MATERIALS

Please visit http://www.ocwatersheds.com for resources.

ATTACHMENT D

BMP MAINTENANCE SUPPLEMENT / O&M PLAN

OPERATIONS AND MAINTENANCE (O&M) PLAN

Water Quality Management Plan

For

Bristol Commons

3600, 3810 & 3930 S Bristol Street, Santa Ana, CA

Assessor Parcel Numbers [APNs] 412-131-12, 412-131-13, 412-131-14, 412-131-16, 412-131-17, 412-131-22, 412-131-24, 412-131-25 and 412-131-26

This page intentionally left blank

BMP INSPECTION & MAINTENANCE RESPONSIBILITY MATRIX			
BMP Applicable? Yes/No	**BMP Name and BMP Implementation, Maintenance and Inspection Procedures**	**Implementation, Maintenance, and Inspection Frequency and Schedule**	**Person or Entity with Operation & Maintenance Responsibility**
NON-STRUCTURAL SOURCE CONTROL BMPs			
YES	**N1. Education for Property Owners, Tenants and Occupants** Educational materials will be provided to tenants, including brochures and restrictions to reduce pollutants from reaching the storm drain system. Examples include tips for pet care, household tips, and proper household hazardous waste disposal. Tenants will be provided with these materials by the property management prior to occupancy, and periodically thereafter.	Frequency: Annually	Owner
YES	**N2. Activity Restrictions** The Owner will prescribe activity restrictions to protect surface water quality, through lease terms or other equally effective measure, for the property. Restrictions include, but are not limited to, prohibiting vehicle maintenance or vehicle washing.	Frequency: Ongoing	Owner

BMP INSPECTION & MAINTENANCE RESPONSIBILITY MATRIX			
BMP Applicable? Yes/No	**BMP Name and BMP Implementation, Maintenance and Inspection Procedures**	**Implementation, Maintenance, and Inspection Frequency and Schedule**	**Person or Entity with Operation & Maintenance Responsibility**
YES	**N3. Common Area Landscape Management** Maintenance shall be consistent with City requirements. Fertilizer and/or pesticide usage shall be consistent with County Management Guidelines for Use of Fertilizers (OC DAMP Section 5.5). Maintenance includes mowing, weeding, and debris removal on a weekly basis. Trimming, replanting, and replacement of mulch shall be performed on an as-needed basis to prevent exposure of erodible surfaces. Trimmings, clippings, and other landscape wastes shall be properly disposed of in accordance with local regulations. Materials temporarily stockpiled during maintenance activities shall be placed away from water courses and storm drains inlets.	Frequency: Weekly	Owner
YES	**N4. BMP Maintenance** Maintenance of structural BMPs implemented at the project site shall be performed at the frequency prescribed in this WQMP. Records of inspections and BMP maintenance shall be kept by the Owner and shall be available for review upon request.	Frequency: Annually	Owner
NO	**N5. Title 22 CCR Compliance (How development will comply)**	Not Applicable	
NO	**N6. Local Industrial Permit Compliance**	Not Applicable	

BMP INSPECTION & MAINTENANCE RESPONSIBILITY MATRIX			
BMP Applicable? Yes/No	BMP Name and BMP Implementation, Maintenance and Inspection Procedures	Implementation, Maintenance, and Inspection Frequency and Schedule	Person or Entity with Operation & Maintenance Responsibility
NO	N7. Spill Contingency Plan	Not Applicable	
NO	N8. Underground Storage Tank Compliance	Not Applicable	
NO	N9. Hazardous Materials Disclosure Compliance	Not Applicable	
NO	N10. Uniform Fire Code Implementation	Not Applicable	
YES	N11. Common Area Litter Control Litter patrol, violations investigations, reporting and other litter control activities shall be performed on a weekly basis and in conjunction with routine maintenance activities.	Frequency: Weekly	Owner
YES	N12. Employee Training The Owner shall educate all new employees/ managers on storm water pollution prevention, particularly good housekeeping practices, prior to the start of the rainy season (October 1). Refresher courses shall be conducted on an as needed basis. Materials that may be utilized on BMP maintenance are included in Appendix D.	Frequency: Annually	Owner
NO	N13. Housekeeping of Loading Docks	Not Applicable	

BMP INSPECTION & MAINTENANCE RESPONSIBILITY MATRIX			
BMP Applicable? Yes/No	**BMP Name and BMP Implementation, Maintenance and Inspection Procedures**	**Implementation, Maintenance, and Inspection Frequency and Schedule**	**Person or Entity with Operation & Maintenance Responsibility**
YES	**N14. Common Area Catch Basin Inspection** Remove trash and debris from catch basins and grates. Check for damage, clogging, and standing water. Repair or mitigate clogging/standing water, as needed.	Frequency: 2x per year and after large storm event	Owner
YES	**N15. Street Sweeping Private Streets and Parking Lots** On-site parking lots, drive aisles, and the parking structure basement level will be swept on a monthly basis, at minimum.	Frequency: Monthly	Owner
NO	**N16. Retail Gasoline Outlets**	Not Applicable	
STRUCTURAL SOURCE CONTROL BMPs			
YES	**S1. Provide storm drain system stenciling and signage** On-site storm drain stencils shall be inspected for legibility, at minimum, once prior to the storm season, no later than October 1st each year. Those determined to be illegible will be re-stenciled as soon as possible.	Frequency: Annually	Owner
NO	**S2. Design and construct outdoor material storage areas to reduce pollution introduction**	Not Applicable	

BMP INSPECTION & MAINTENANCE RESPONSIBILITY MATRIX			
BMP Applicable? Yes/No	**BMP Name and BMP Implementation, Maintenance and Inspection Procedures**	**Implementation, Maintenance, and Inspection Frequency and Schedule**	**Person or Entity with Operation & Maintenance Responsibility**
YES	**S3. Design and construct trash and waste storage areas to reduce pollution introduction** Trash receptacles will be monitored and emptied by management of the Bowery. Trash will be taken from the interior trash rooms to the exterior trash storage areas at the time trash collection is set to occur. The four trash storage areas will drain into a water quality inlet to prevent discharge of spilled contaminants, consistent with local design standards.	Frequency: Ongoing	Owner
YES	**S4. Use efficient irrigation systems & landscape design, water conservation, smart controllers, and source control** In conjunction with routine maintenance, verify that landscape design continues to function properly by adjusting systems to eliminate overspray to hardscape areas and to verify that irrigation timing and cycle lengths are adjusted in accordance to water demands, given the time of year, weather, and day or nighttime temperatures. System testing shall occur twice per year. Water from testing/flushing shall be collected and properly disposed to the sewer system and shall not discharge to the storm drain system.	Frequency: 2x per year	Owner
NO	**S5. Protect slopes and channels and provide energy dissipation**	Not Applicable	

BMP INSPECTION & MAINTENANCE RESPONSIBILITY MATRIX			
BMP Applicable? Yes/No	BMP Name and BMP Implementation, Maintenance and Inspection Procedures	Implementation, Maintenance, and Inspection Frequency and Schedule	Person or Entity with Operation & Maintenance Responsibility
NO	S6. Dock areas	Not Applicable	
NO	S7. Maintenance bays	Not Applicable	
NO	S8. Vehicle wash areas	Not Applicable	
NO	S9. Outdoor processing areas	Not Applicable	
NO	S10. Equipment wash areas	Not Applicable	
NO	S11. Fueling areas	Not Applicable	
NO	S12. Hillside landscaping	Not Applicable	
YES	S13. Wash water control for food preparation areas Adequate signs shall be provided and appropriately placed stating the prohibition of discharging wash water to the storm drain system. Employees shall be trained in discharge and safety requirements outlined in State Health & Safety Code 27520. All cooking utensils shall be cleaned in appropriate wash stations.	Frequency: Ongoing	Owner
NO	S14. Community car wash racks	Not Applicable	

BMP INSPECTION & MAINTENANCE RESPONSIBILITY MATRIX		
BMP Name and BMP Implementation, Maintenance and Inspection Procedures	**Implementation, Maintenance, and Inspection Frequency and Schedule**	**Person or Entity with Operation & Maintenance Responsibility**
LOW IMPACT DEVELOPMENT BMPs		
Biotreatment BMP: Modular Wetland System BIO-7	Maintenance activities should include clearing of the accumulation of sediment and debris. Additional media/filter replacement determined by manufacturer maintenance procedures. Frequency: Per manufacturer	Owner

Required Permits

Permits are not required for the implementation, operation, and maintenance of the BMPs.

Forms to Record BMP Implementation, Maintenance, and Inspection

The form that will be used to record implementation, maintenance, and inspection of BMPs is attached.

Recordkeeping

All records must be maintained for at least five (5) years and must be made available for review upon request.

Waste Management

Any waste generated from maintenance activities will be disposed of properly. Wash water and other waste from maintenance activities is not to be discharged or disposed of into the storm drain system. Clippings from landscape maintenance (i.e. prunings) will be collected and disposed of properly off-site, and will not be washed into the streets, local area drains/conveyances, or catch basin inlets.

RECORD OF BMP IMPLEMENTATION, MAINTENANCE, AND INSPECTION

Today's Date: _____

Name of Person Performing Activity (Printed): _____

Signature: _____

BMP Name (As Shown in O&M Plan)	Brief Description of Implementation, Maintenance, and Inspection Activity Performed

RECORD OF BMP IMPLEMENTATION, MAINTENANCE, AND INSPECTION

Today's Date: _____

Name of Person Performing Activity (Printed): _____

Signature: _____

BMP Name (As Shown in O&M Plan)	Brief Description of Implementation, Maintenance, and Inspection Activity Performed

Bio Clean

A Forterra Company

Modular Wetlands® Linear

A Stormwater Biofiltration Solution

OPERATION & MAINTENANCE MANUAL



Inspection Guidelines for Modular Wetland System - Linear

Inspection Summary

- Inspect Pre-Treatment, Biofiltration and Discharge Chambers – average inspection interval is 6 to 12 months.
  - (1*5 minute average inspection time*).
- NOTE: Pollutant loading varies greatly from site to site and no two sites are the same. Therefore, the first year requires inspection monthly during the wet season and every other month during the dry season in order to observe and record the amount of pollutant loading the system is receiving.

System Diagram

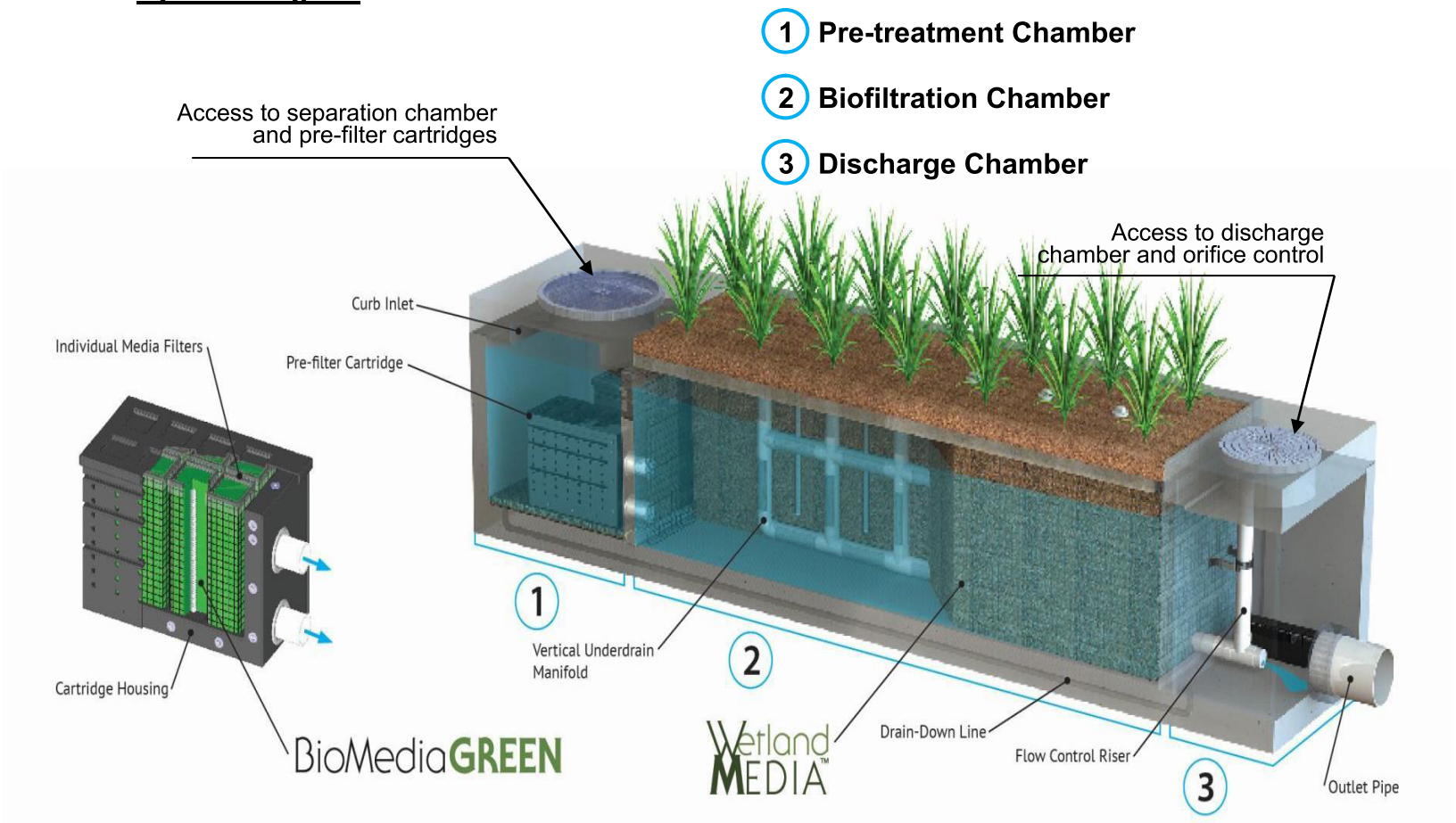

Inspection Overview

As with all stormwater BMPs inspection and maintenance on the MWS Linear is necessary. Stormwater regulations require that all BMPs be inspected and maintained to ensure they are operating as designed to allow for effective pollutant removal and provide protection to receiving water bodies. It is recommended that inspections be performed multiple times during the first year to assess the site specific loading conditions. This is recommended because pollutant loading and pollutant characteristics can vary greatly from site to site. Variables such as nearby soil erosion or construction sites, winter sanding on roads, amount of daily traffic and land use can increase pollutant loading on the system. The first year of inspections can be used to set inspection and maintenance intervals for subsequent years to ensure appropriate maintenance is provided. Without appropriate maintenance a BMP will exceed its storage capacity which can negatively affect its continued performance in removing and retaining captured pollutants.

Inspection Equipment

Following is a list of equipment to allow for simple and effective inspection of the MWS Linear:

- Modular Wetland Inspection Form
- Flashlight
- Manhole hook or appropriate tools to remove access hatches and covers
- Appropriate traffic control signage and procedures
- Measuring pole and/or tape measure.
- Protective clothing and eye protection.
- 7/16” open or closed ended wrench.
- Large permanent black marker (initial inspections only – first year)
- Note: entering a confined space requires appropriate safety and certification. It is generally not required for routine inspections of the system.



Inspection Steps

The core to any successful stormwater BMP maintenance program is routine inspections. The inspection steps required on the MWS Linear are quick and easy. As mentioned above the first year should be seen as the maintenance interval establishment phase. During the first year more frequent inspections should occur in order to gather loading data and maintenance requirements for that specific site. This information can be used to establish a base for long term inspection and maintenance interval requirements.

The MWS Linear can be inspected though visual observation without entry into the system. All necessary pre-inspection steps must be carried out before inspection occurs, especially traffic control and other safety measures to protect the inspector and near-by pedestrians from any dangers associated with an open access hatch or manhole. Once these access covers have been safely opened the inspection process can proceed:

- Prepare the inspection form by writing in the necessary information including project name, location, date & time, unit number and other info (see inspection form).
- Observe the inside of the system through the access hatches. If minimal light is available and vision into the unit is impaired utilize a flashlight to see inside the system and all of its chambers.
- Look for any out of the ordinary obstructions in the inflow pipe, pre-treatment chamber, biofiltration chamber, discharge chamber or outflow pipe. Write down any observations on the inspection form.
- Through observation and/or digital photographs estimate the amount of trash, debris and sediment accumulated in the pre-treatment chamber. Utilizing a tape measure or measuring stick estimate the amount of trash, debris and sediment in this chamber. Record this depth on the inspection form.

- Through visual observation inspect the condition of the pre-filter cartridges. Look for excessive build-up of sediments on the cartridges, any build-up on the top of the cartridges, or clogging of the holes. Record this information on the inspection form. The pre-filter cartridges can further be inspected by removing the cartridge tops and assessing the color of the BioMediaGREEN filter cubes (requires entry into pre-treatment chamber – see notes above regarding confined space entry). Record the color of the material. New material is a light green in color. As the media becomes clogged it will turn darker in color, eventually becoming dark brown or black. Using the below color indicator record the percentage of media exhausted.

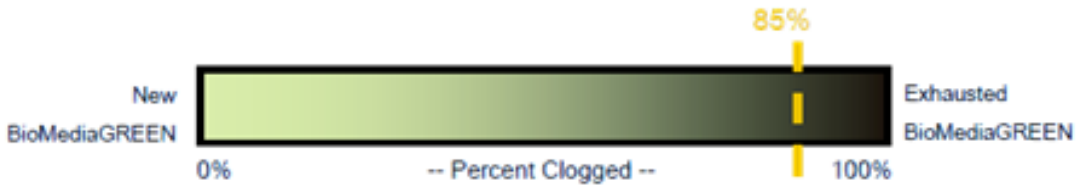

The biofiltration chamber is generally maintenance free due to the system's advanced pre-treatment chamber. For units which have open planters with vegetation it is recommended that the vegetation be inspected. Look for any plants that are dead or showing signs of disease or other negative stressors. Record the general health of the plants on the inspection and indicate through visual observation or digital photographs if trimming of the vegetation is needed.
The discharge chamber houses the orifice control structure, drain down filter and is connected to the outflow pipe. It is important to check to ensure the orifice is in proper operating conditions and free of any obstructions. It is also important to assess the condition of the drain down filter media which utilizes a block form of the BioMediaGREEN. Assess in the same manner as the cubes in the Pre-Filter Cartridge as mentioned above. Generally, the discharge chamber will be clean and free of debris. Inspect the water marks on the side walls. If possible, inspect the discharge chamber during a rain event to assess the amount of flow leaving the system while it is at 100% capacity (pre-treatment chamber water level at peak hydraulic grade lines or HGL). The water level of the flowing water should be compared to the watermark level on the side walls which is an indicator of the highest discharge rate the system achieved when initially installed. Record on the form is there is any difference in level from watermark in inches.

- NOTE: During the first few storms the water level in the outflow chamber should be observed and a 6 inch long horizontal watermark line drawn (using a large permanent marker) at the water level in the discharge chamber while the system is operating at 100% capacity. The diagram below illustrates where a line should be drawn. This line is a reference point for future inspections of the system:





Using a permanent marker draw a 6 inch long horizontal line, as shown, at the higher water level in the MWS Linear discharge chamber.

- Water level in the discharge chamber is a function of flow rate and pipe size. Observation of water level during the first few months of operation can be used as a benchmark level for future inspections. The initial mark and all future observations shall be made when system is at 100% capacity (water level at maximum level in pre-treatment chamber). If future water levels are below this mark when system is at 100% capacity this is an indicator that maintenance to the pre-filter cartridges may be needed.
- *Finalize inspection report for analysis by the maintenance manager to determine if* maintenance is required.

Maintenance Indicators

Based upon observations made during inspection, maintenance of the system may be required based on the following indicators:

- Missing or damaged internal components or cartridges.
- Obstructions in the system or its inlet or outlet.
- Excessive accumulation of floatables in the pre-treatment chamber in which the length and width of the chamber is fully impacted more than 18”.



Excessive accumulation of sediment in the pre-treatment chamber of more than 6 inches in depth.



- Excessive accumulation of sediment on the BioMediaGREEN media housed within the pre-filter cartridges. The following chart shows photos of the condition of the BioMediaGREEN contained within the pre-filter cartridges. When media is more than 85% clogged replacement is required.



- Excessive accumulation of sediment on the BioMediaGREEN media housed within the drain down filter. The following photos show of the condition of the BioMediaGREEN contained within the drain down filter. When media is more than 85% clogged replacement is required.





- Overgrown vegetation.





- Water level in discharge chamber during 100% operating capacity (pre-treatment chamber water level at max height) is lower than the watermark by 20%.

Inspection Notes

1. Following maintenance and/or inspection, it is recommended the maintenance operator prepare a maintenance/inspection record. The record should include any maintenance activities performed, amount and description of debris collected, and condition of the system and its various filter mechanisms.

2. The owner should keep maintenance/inspection record(s) for a minimum of five years from the date of maintenance. These records should be made available to the governing municipality for inspection upon request at any time.

3. Transport all debris, trash, organics and sediments to approved facility for disposal in accordance with local and state requirements.

4. Entry into chambers may require confined space training based on state and local regulations.

5. No fertilizer shall be used in the Biofiltration Chamber.

6. Irrigation should be provided as recommended by manufacturer and/or landscape architect. Amount of irrigation required is dependent on plant species. Some plants may not require irrigation after initial establishment.

Maintenance Guidelines for Modular Wetland System - Linear

Maintenance Summary

- Remove Sediment from Pre-Treatment Chamber – average maintenance interval is 12 to 24 months.
  - (*10 minute average service time*).
- Replace Pre-Filter Cartridge Media – average maintenance interval 12 to 24 months.
  - (*10-15 minute per cartridge average service time*).
- Trim Vegetation – average maintenance interval is 6 to 12 months.
  - (*Service time varies*).

System Diagram

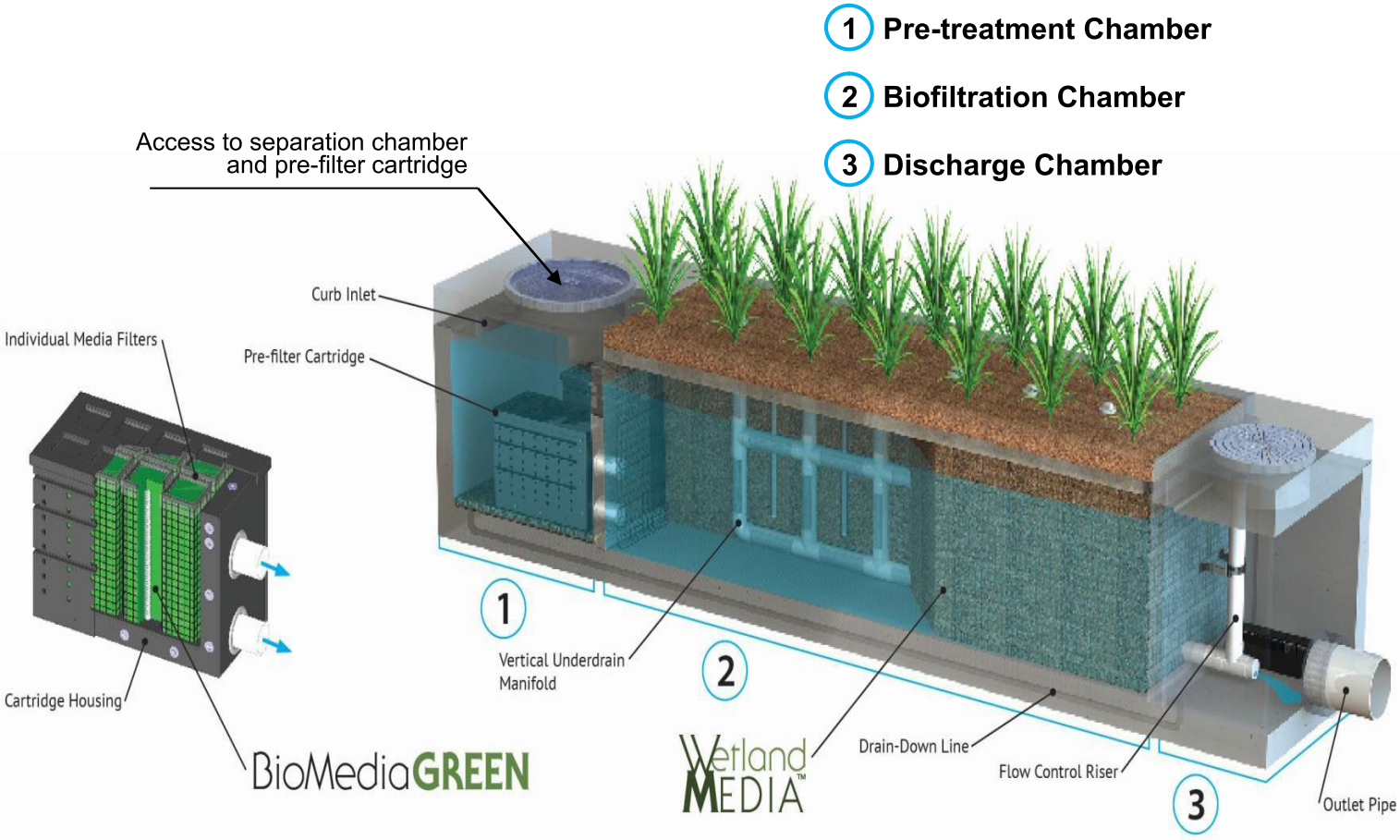

Maintenance Overview

The time has come to maintain your Modular Wetland System Linear (MWS Linear). To ensure successful and efficient maintenance on the system we recommend the following. The MWS Linear can be maintained by removing the access hatches over the systems various chambers. All necessary pre-maintenance steps must be carried out before maintenance occurs, especially traffic control and other safety measures to protect the inspector and near-by pedestrians from any dangers associated with an open access hatch or manhole. Once traffic control has been set up per local and state regulations and access covers have been safely opened the maintenance process can begin. It should be noted that some maintenance activities require confined space entry. All confined space requirements must be strictly followed before entry into the system. In addition the following is recommended:

- Prepare the maintenance form by writing in the necessary information including project name, location, date & time, unit number and other info (see maintenance form).
- Set up all appropriate safety and cleaning equipment.
- Ensure traffic control is set up and properly positioned.
- Prepare a pre-checks (OSHA, safety, confined space entry) are performed.

Maintenance Equipment

Following is a list of equipment required for maintenance of the MWS Linear:

- Modular Wetland Maintenance Form
- Manhole hook or appropriate tools to access hatches and covers
- Protective clothing, flashlight and eye protection.
- 7/16” open or closed ended wrench.
- Vacuum assisted truck with pressure washer.
- Replacement BioMediaGREEN for Pre-Filter Cartridges if required (order from manufacturer).



Maintenance Steps

1. Pre-treatment Chamber (bottom of chamber)

   A. Remove access hatch or manhole cover over pre-treatment chamber and position vacuum truck accordingly.
   B. With a pressure washer spray down pollutants accumulated on walls and pre-filter cartridges.
   C. Vacuum out Pre-Treatment Chamber and remove all accumulated pollutants including trash, debris and sediments. Be sure to vacuum the floor until pervious pavers are visible and clean.
   D. If Pre-Filter Cartridges require media replacement move onto step 2. If not, replace access hatch or manhole cover.

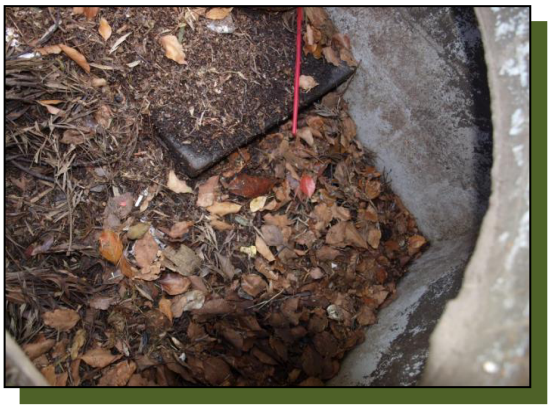

Removal of access hatch to gain access below.



Insertion of vacuum hose into separation chamber.



Removal of trash, sediment and debris.

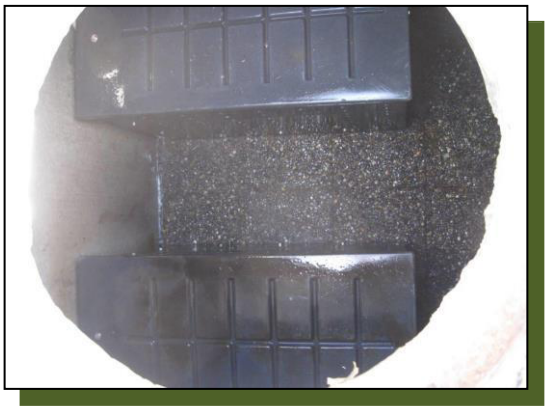

Fully cleaned separation chamber.

2. Pre-Filter Cartridges (attached to wall of pre-treatment chamber)

A. After finishing step 1 enter pre-treatment chamber.

B. Unscrew the two bolts holding the lid on each cartridge filter and remove lid.



Pre-filter cartridges with tops on.



Inside cartridges showing media filters ready for replacement.

C. Place the vacuum hose over each individual media filter to suck out filter media.



Vacuuming out of media filters.

D. Once filter media has been sucked use a pressure washer to spray down inside of the cartridge and it's containing media cages. Remove cleaned media cages and place to the side. Once removed the vacuum hose can be inserted into the cartridge to vacuum out any remaining material near the bottom of the cartridge.

E. Reinstall media cages and fill with new media from manufacturer or outside supplier. Manufacturer will provide specification of media and sources to purchase. Utilize the manufacture provided refilling trey and place on top of cartridge. Fill trey with new bulk media and shake down into place. Using your hands slightly compact media into each filter cage. Once cages are full removed refilling trey and replace cartridge top ensuring bolts are properly tightened.

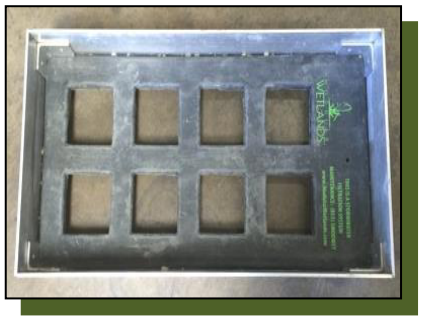

Refilling trey for media replacement.



Refilling trey on cartridge with bulk media.



F. Exit pre-treatment chamber. Replace access hatch or manhole cover.

3. <u>Biofiltration Chamber (middle vegetated chamber)</u>

A. In general, the biofiltration chamber is maintenance free with the exception of maintaining the vegetation. Using standard gardening tools properly trim back the vegetation to healthy levels. The MWS Linear utilizes vegetation similar to surrounding landscape areas therefore trim vegetation to match surrounding vegetation. If any plants have died replace plants with new ones:





B. Over time, sediment will accumulate in the perimeter void area and will need to be vacuumed out. The media surface may also require power washing if it becomes occluded with sediment. In addition, the wetland media will eventually need to be replaced after 10 plus years of service. A vacuum truck is recommended to fully remove all wetland media. Once old media is removed the entire chamber, media cage, and netting should be power washed. The netting may require replacement before installing new media. New wetland media should be purchased directly from the manufacture. It can be delivered either in bulk or in super sacks for easy installation.

4. Discharge Chamber (contains drain down cartridge & connected to pipe)

   A. Remove access hatch or manhole cover over discharge chamber.
   B. Enter chamber to gain access to the drain down filter. Unlock the locking mechanism and left up drain down filter housing to remove used BioMediaGREEN filter block as shown below:





   C. Insert new BioMediaGREEN filter block and lock drain down filter housing back in place. Replace access hatch or manhole cover over discharge chamber.

Inspection Notes

1. Following maintenance and/or inspection, it is recommended the maintenance operator prepare a maintenance/inspection record. The record should include any maintenance activities performed, amount and description of debris collected, and condition of the system and its various filter mechanisms.

2. The owner should keep maintenance/inspection record(s) for a minimum of five years from the date of maintenance. These records should be made available to the governing municipality for inspection upon request at any time.

3. Transport all debris, trash, organics and sediments to approved facility for disposal in accordance with local and state requirements.

4. Entry into chambers may require confined space training based on state and local regulations.

5. No fertilizer shall be used in the Biofiltration Chamber.

6. Irrigation should be provided as recommended by manufacturer and/or landscape architect. Amount of irrigation required is dependent on plant species. Some plants may not require irrigation after initial establishment.

Field Unfactored Infiltration Rates	
Test ID (Boring)	Field Infiltration Rate (in/hr)
P-1	<0.1
P-2	<0.1
P-5	<0.1
P-6	<0.1

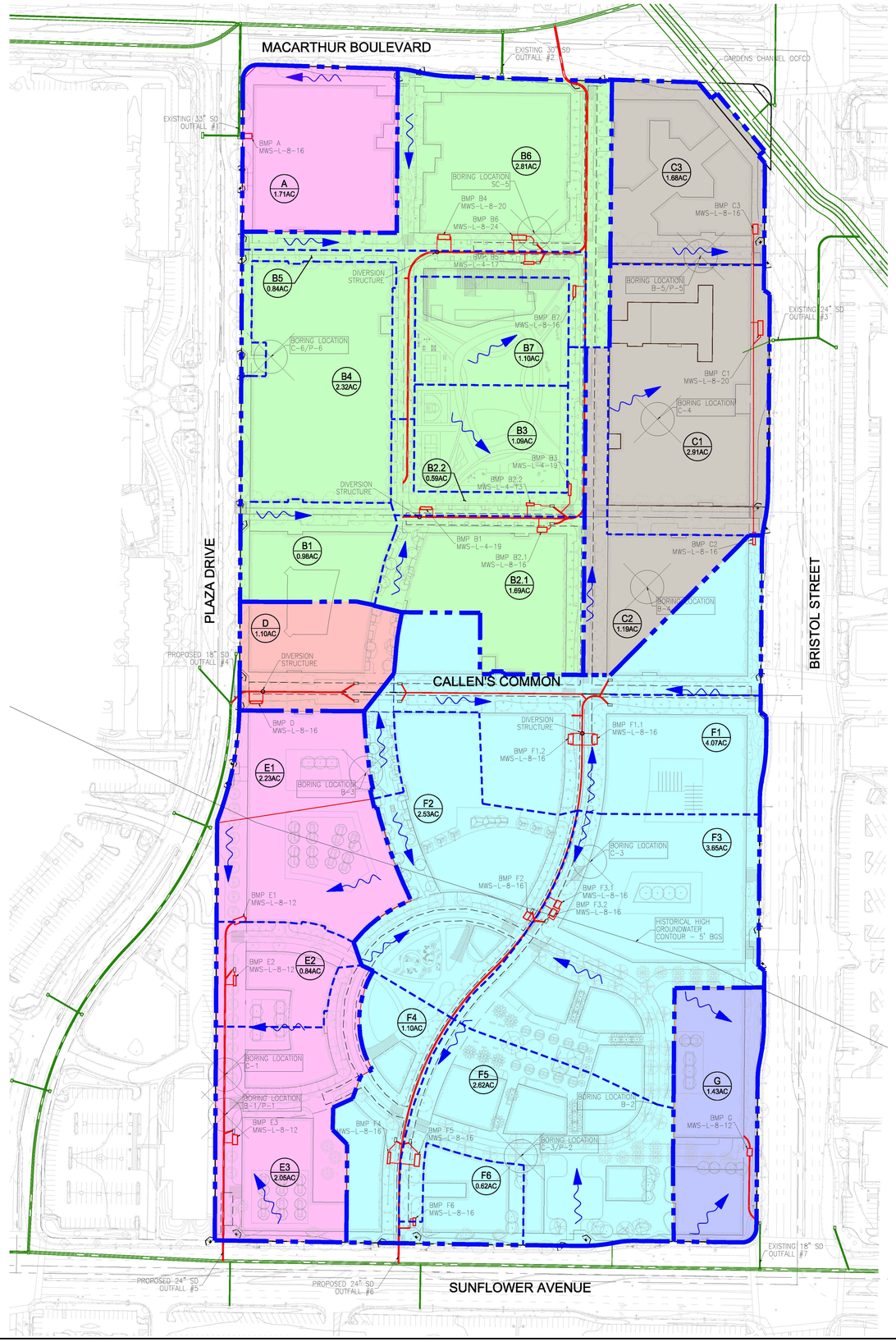

LEGEND

- PROPERTY LINE
- EXISTING STORM DRAIN
- PROPOSED STORM DRAIN
- BMP DRAINAGE AREA BOUNDARY
- SURFACE DRAINAGE
- DMA A
- DMA B
- DMA C
- DMA D
- DMA E
- DMA F
- DMA G
- PROPOSED MODULAR WETLAND SYSTEM SEE FOLLOWING SHEETS FOR DETAILS

DMA	Total Drainage Area (sf)	% Imp.	Runoff Coefficient	Design Storm Depth (in)	Tc (min)	Rainfall Intensity (in/hr)	Simple Method DCV (cf)	Q_{Design} (cfs)
DMA A	74,487.6	90.0%	0.825	0.75	5	0.26	3,840.8	0.367
DMA B1	42,688.8	90.0%	0.825	0.75	5	0.26	2,201.1	0.210
DMA B2.1	73,616.4	90.0%	0.825	0.75	5	0.26	3,795.8	0.363
DMA B2.2	25,700.4	90.0%	0.825	0.75	5	0.26	1,325.2	0.127
DMA B3	47,480.4	90.0%	0.825	0.75	5	0.26	2,448.2	0.234
DMA B4	101,059.2	90.0%	0.825	0.75	5	0.26	5,210.9	0.498
DMA B5	36,590.4	90.0%	0.825	0.75	5	0.26	1,886.7	0.180
DMA B6	122,403.6	90.0%	0.825	0.75	5	0.26	6,311.4	0.603
DMA B7	47,916.0	90.0%	0.825	0.75	5	0.26	2,470.7	0.236
DMA C1	126,759.6	90.0%	0.825	0.75	5	0.26	6,536.0	0.624
DMA C2	51,836.4	90.0%	0.825	0.75	5	0.26	2,672.8	0.255
DMA C3	73,180.8	90.0%	0.825	0.75	5	0.26	3,773.4	0.360
DMA D	47,916.0	90.0%	0.825	0.75	5	0.26	2,470.7	0.236
DMA E1	97,138.8	90.0%	0.825	0.75	5	0.26	5,008.7	0.478
DMA E2	36,590.4	90.0%	0.825	0.75	5	0.26	1,886.7	0.180
DMA E3	89,298.0	90.0%	0.825	0.75	5	0.26	4,604.4	0.440
DMA F1	177,289.2	90.0%	0.825	0.75	5	0.26	9,141.5	0.873
DMA F2	110,206.8	90.0%	0.825	0.75	5	0.26	5,682.5	0.543
DMA F3	158,994.0	90.0%	0.825	0.75	5	0.26	8,198.1	0.783
DMA F4	47,916.0	90.0%	0.825	0.75	5	0.26	2,470.7	0.236
DMA F5	114,127.2	90.0%	0.825	0.75	5	0.26	5,884.7	0.562
DMA F6	27,007.2	90.0%	0.825	0.75	5	0.26	1,392.6	0.133
DMA G	62,290.8	90.0%	0.825	0.75	5	0.26	3,211.9	0.307
TOTAL	1,792,494.0	90.0%	0.825	0.75	5	0.26	92,425.5	8.827

DMA	DCV (cf)	Design Intensity (in/hr)	Q_{design} (cfs)	Unit Size/Model	Model Treatment Capacity (cfs)	Operating Head (ft)	Number of Units	Total Treatment Provided (cfs)	GIS Coordinates
DMA A	3,840.8	0.26	0.367	MWS-L-8-16	0.462	3.4	1	0.462	33.69955127, -117.88862679
DMA B1	2,201.1	0.26	0.210	MWS-L-4-19	0.237	3.4	1	0.237	33.69782271, -117.88759274
DMA B2.1	3,795.8	0.26	0.363	MWS-L-8-16	0.462	3.4	1	0.462	33.69772911, -117.88694096
DMA B2.2	1,325.2	0.26	0.127	MWS-L-4-13	0.144	3.4	1	0.144	33.69784545, -117.88701170
DMA B3	2,448.2	0.26	0.234	MWS-L-4-19	0.237	3.4	1	0.237	33.69791765, -117.88679180
DMA B4	5,210.9	0.26	0.498	MWS-L-8-20	0.577	3.4	1	0.577	33.69909612, -117.88750554
DMA B5	1,886.7	0.26	0.180	MWS-L-4-17	0.206	3.4	1	0.206	33.69897603, -117.88704148
DMA B6	6,311.4	0.26	0.603	MWS-L-8-24	0.693	3.4	1	0.693	33.69909800, -117.88709671
DMA B7	2,470.7	0.26	0.236	MWS-L-4-19	0.237	3.4	1	0.237	33.69884339, -117.88678318
DMA C1	6,536.0	0.26	0.624	MWS-L-8-24	0.693	3.4	1	0.693	33.69868985, -117.88573564
DMA C2	2,672.8	0.26	0.255	MWS-L-4-21	0.268	3.4	1	0.268	33.69770346, -117.88575353
DMA C3	3,773.4	0.26	0.360	MWS-L-8-16	0.462	3.4	1	0.462	33.69915513, -117.88577380
DMA D	2,470.7	0.26	0.236	MWS-L-4-19	0.237	3.4	1	0.237	33.69690021, -117.88852721
DMA E1	5,008.7	0.26	0.478	MWS-L-8-20	0.577	3.4	1	0.577	33.69588183, -117.88859965
DMA E2	1,886.7	0.26	0.180	MWS-L-4-17	0.206	3.4	1	0.206	33.69559712, -117.88862406
DMA E3	4,604.4	0.26	0.440	MWS-L-8-16	0.462	3.4	1	0.462	33.69485266, -117.88861119
DMA F1	9,141.5	0.26	0.873	MWS-L-8-16	0.462	3.4	2	0.924	F1.1: 33.69675103, -117.88663159 F1.2: 33.69674924, -117.88676831
DMA F2	5,682.5	0.26	0.543	MWS-L-8-12	0.346	3.4	1	0.346	33.69592401, -117.88699162
DMA F3	8,198.1	0.26	0.783	MWS-L-8-12	0.346	3.4	2	0.692	F3.1: 33.69598058, -117.88682008 F3.2: 33.69593873, -117.88684756
DMA F4	2,470.7	0.26	0.236	MWS-L-4-19	0.237	3.4	1	0.237	33.69478067, -117.8877491
DMA F5	5,884.7	0.26	0.562	MWS-L-8-20	0.577	3.4	1	0.577	33.69476990, -117.88759053
DMA F6	1,392.6	0.26	0.133	MWS-L-4-13	0.144	3.4	1	0.144	33.69448607, -117.88759468
DMA G	3,211.9	0.26	0.307	MWS-L-8-12	0.346	3.4	1	0.346	33.69482906, -117.88573078
TOTAL	92,425.5	0.26	8.827						

100' 0' 50' 100'
SCALE: 1" = 100'

PREPARED BY:
FUSCOE ENGINEERING
16795 Von Karman, Suite 100
Irvine, California 92606
tel 949.474.1960 fax 949.474.5315
www.fuscoe.com

REGISTERED PROFESSIONAL ENGINEER DONNA A. SLAVEN NO. C63451 Exp. 09/30/24 CIVIL STATE OF CALIFORNIA

PRELIMINARY WATER QUALITY MANAGEMENT PLAN
RELATED BRISTOL
CITY OF SANTA ANA, CALIFORNIA

PROJECT NO. 622-015

SHEET 1 OF 1

CITY OF SANTA ANA – BRISTOL COMMONS
PRELIMINARY WATER QUALITY MANAGEMENT PLAN
2023-03-31

C:\PROJECTS\622-015_SUPPORT FILES\REPORTS\WQMP\SECTION 6 GRAPHICS\622-015PWQMP_BRISTOL WQMP.DWG (03-28-23 12:44:03PM) Plotted by: Shadi

Inspection Form



Modular Wetland System, Inc.
P. 760.433-7640
F. 760-433-3176
E. Info@modularwetlands.com

www.modularwetlands.com

Maintenance Report



Modular Wetland System, Inc.
P. 760.433-7640
F. 760-433-3176
E. Info@modularwetlands.com

www.modularwetlands.com

ATTACHMENT E

CONDITIONS OF APPROVAL

ATTACHMENT F

GEOTECHNICAL REPORT

PRELIMINARY INVESTIGATION REPORT
BRISTOL COMMONS PROJECT
SANTA ANA, ORANGE COUNTY, CA

Prepared for

RELATED CALIFORNIA RESIDENTIAL, LLC
18201 Von Karman Avenue, Suite 900
Irvine, CA 92612

Prepared by

GROUP DELTA CONSULTANTS, INC.
32 Mauchly, Suite B
Irvine, California 92618

Group Delta Project No. IR737
August 3, 2022

GROUP DELTA

Related California Residential, LLC
18201 Von Karmen Ave., Suite 900
Irvine, CA 92612

August 3, 2022
Group Delta Project No. IR737

Attention: Mr. Steven Oh
Senior Vice President

Subject: Preliminary Geotechnical Investigation Report
Bristol Commons Project
Santa Ana, Orange County, CA

Dear Mr. Oh,

Group Delta Consultants (Group Delta) is pleased to submit this geotechnical feasibility report for the Bristol Commons Project in the City of Santa Ana of Orange County, California. Our scope of work was to perform a geotechnical assessment of the site to support your decisions and pricing of the proposed development. A limited field investigation and laboratory work were performed for the subject site and this report will not be suitable for final design. A comprehensive investigation involving additional field and laboratory work will be needed as the project proceeds to the design stage.

We appreciate the opportunity to provide geotechnical services for this project. Should you have any questions regarding this report, or if we can be of further service, please contact the undersigned.

Sincerely,
GROUP DELTA CONSULTANTS, INC.



Michael J. Givens, PhD, PE, GE, PG
Associate Geotechnical Engineer

Distribution: Addressee (1)

TABLE OF CONTENTS

1.0 INTRODUCTION 1
1.1 General 1
1.2 Project Description 1
1.3 Objectives and Scope of Work 1
2.0 GEOTECHNICAL INVESTIGATIONS 3
2.1 Field Explorations 3
2.2 Laboratory Testing Program 3
3.0 SITE AND SUBSURFACE CONDITIONS 4
3.1 Regional Geology 4
3.2 Surface Conditions 4
3.3 Subsurface Conditions 4
3.3 Groundwater 5
3.4 Infiltration Rates 6
4.0 Discussion and Recommendations 7
4.1 Potential Seismic Hazards 7
4.1.1 Ground Surface Rupture 7
4.1.2 Liquefaction and Seismic Settlement 7
4.1.3 Seismic Slope Stability 7
4.1.4 Flood Hazard Zone 8
4.1.5 Other Seismic Hazards 8
4.2 Preliminary Seismic Design Parameters 8
4.3 Expansive Soils 9
4.4 Soil Corrosion Potential 9
5.0 PRELIMINARY FOUNDATION RECOMMENDATIONS 11
5.1 General 11
5.2 Type III Wood Frame Residential Structures 12
5.3 Podium Structures 13
5.4 Concrete Structures 14
5.4.1 Concrete Structures 6-Story or Less 14

5.4.2 Concrete Structures 8-Story or Taller 14
5.5 Parking Structures 16
5.5.1 Short-Span Parking 16
5.5.2 Long-Span Parking 17
5.6 Ground Improvement – Aggregate (Stone) Columns 17
5.7 Basement Walls 18
5.8 Slabs-on-Grade 18
6.0 CONSTRUCTION CONSIDERATIONS 20
6.1 Groundwater Issues 20
6.2 Construction Phasing 20
6.3 Adjacent Structure 20
6.4 On-Site and Imported Fills 21
6.5 Temporary Excavation and Shoring 21
6.6 Pile and Ground Improvement Load Testing 21
6.0 Additional Investigations for Final Design and Construction 23
7.0 LIMITATIONS 24
8.0 REFERENCES 25

LIST OF FIGURES

Figure 1 Project Site Vicinity Map
Figure 2A Conceptual Master Plan
Figure 2B Conceptual Phasing Plan
Figure 3 Exploration Location Plan
Figure 4 Regional Geology Map
Figure 5A Cross-Section A-A’
Figure 5B Cross-Section B-B’
Figure 5C Subsurface Characterization A-A’
Figure 5D Subsurface Characterization B-B’
Figure 6 Fault and Seismicity Map
Figure 7 Preliminary Structural Loading for Building Typology
Figure 8A Preliminary Ultimate Axial Pile Capacity, 16-Inch-Diameter ACD
Figure 8B Preliminary Ultimate Axial Pile Capacity, 24-Inch-Diameter ACD

LIST OF TABLES

Table 1	General Soil Profile
Table 2	Field Unfactored Infiltration Rates
Table 3	Preliminary Seismic Design Parameters
Table 4	Corrosion Potential Test Results
Table 5	Allowable Bearing Pressure for Type III At-Grade Wood Structures
Table 6	Mat Slab Settlement Estimates

APPENDICES

Appendix A	Field Investigation
Appendix B	Laboratory Testing

1.0 INTRODUCTION

1.1 General

This report presents the results of our geotechnical assessment for the proposed Bristol Commons Development that is located in Santa Ana, California and is bounded by Sunflower Ave to the south, South Bristol St to the east, West MacArthur Blvd to the north and generally by South Plaza Dr. to the west as shown in Figure 1. The conceptual concept master plan and phasing are depicted in Figure 2. An aerial photograph of the site is shown in Figure 3. Detailed plans for the proposed development are not available at this time.

The purpose of our scope of work was to perform a geotechnical feasibility assessment for the proposed development, involving data review, field exploration work, limited laboratory testing, and limited engineering analysis. The aim of this study is to aid in your decisions and pricing of the proposed development. This report does not contain sufficient data for design nor for submission to the City of Santa Ana for permit approval.

1.2 Project Description

Our understanding of the project is based on information provided by Related California. We understand that the proposed improvements may include approximately 3,700 residential units in a mix of construction types including (garden apartments, podium style apartments and high-rise construction), as shown in Figure 2A. The project also includes 200,000 square feet (sf) of retail, 170 Senior Assisted living, a 200-unit hotel, 25,000 sf office building, 50,000 sf Medical office building, 6-acre park, 6,274 parking spaces and a potential Charter School. The current conceptual phasing strategy contemplates 6 phases starting from the southern portion of the site nearest to South Coast Plaza and moving north as depicted in Figure 2B.

Currently, the site is developed with approximately 475,000 square feet (sf) of retail and respective paved parking lots. An Orange County Flood Control (OCFD) culvert and easement diagonally crosses the northeastern corner of the property near the existing Chase Bank building.

1.3 Objectives and Scope of Work

The objective of this report is to assess the feasibility of the proposed project from a geotechnical standpoint, including identifying the primary geotechnical factors that impact development at the site and preliminary geotechnical recommendations for the project. Our authorized scope of work includes:

- Review of available conceptual plans, geotechnical and geologic data, maps, and reports;
- Perform 7 Cone Penetration Tests (CPT) and 5 hollow stem auger borings to evaluate subsurface soil conditions;
- Install 1 temporary groundwater monitoring well;

- Perform 4 percolation tests to obtain unfactored infiltration rates;
- Perform limited laboratory testing to characterize the subsurface profile and to evaluate the engineering properties of the soils encountered;
- Perform limited engineering analyses to develop conceptual geotechnical recommendations for the site development, including recommendations for grading, foundations, active and passive earth pressures, and other construction-related issues such as shoring and foundation construction;
- Summarize our findings and preparing a preliminary geotechnical investigation report;
- Our geotechnical investigation excludes all issues related to environmental engineering, hazardous materials, and related matters.

2.0 GEOTECHNICAL INVESTIGATIONS

2.1 Field Explorations

A site investigation program for preliminary design for the project was undertaken on February 14, 2020 and January 4 and 5, 2021 that included the following:

- Seven (7) CPTs extending to depths ranging from 60 to 115 feet bgs;
- Five (5) hollow stem auger borings advanced to depths of 30 to 70 feet bgs; and
- Four (4) percolation tests at depth interval of 0 to 5 feet bgs.

One seismic cone penetration test (SCPT) was completed at the site. SCPT soundings recorded shear waves at intervals of 5 feet as well as the aforementioned standard CPT measurements.

The locations of our CPTs and exploratory borings, and percolation tests are shown in Figure 3. Prior to drilling, the locations were cleared through DigAlert, and the top 5 feet of drilling was performed with a hand auger to visually clear the hole of utilities. Additionally the locations were cleared of utilities by geophysical surveying. Details of the current Group Delta field exploration, including borings and CPT logs and interpretations are presented in Appendix A.

2.2 Laboratory Testing Program

The following limited laboratory testing was performed for this investigation to evaluate the physical properties and engineering characteristics of the subsurface materials encountered at the site.

- Moisture content and dry density (ASTM D2937, D2216);
- Atterberg limits (ASTM D4318);
- Percent passing No. 200 sieve (ASTM D1140);
- Sieve Analysis (ASTM C136);
- Soil Corrosivity (pH, Sulfate, Chloride, and Minimum Resistivity - CTM 417, 422 643);
- Expansion Index (ASTM D4829);
- Consolidation (ASTM D2435); and
- Unconsolidated-Undrained Triaxial Compression (ASTM D2850).

A detailed description of the laboratory testing program and test results are presented in Appendix B.

3.0 SITE AND SUBSURFACE CONDITIONS

3.1 Regional Geology

The site is located within the Los Angeles Basin which is part of the Peninsular Range Geomorphic Province of California. The Peninsular Ranges are characterized by a series of northwest trending mountain ranges separated by valleys. Range geology consists of granitic rock intruding the older metamorphic rocks. Valley geology is typified by shallow to deep alluvial basins consisting of gravel, sand, silt and clay.

Specifically, the site is located at the southern margin of the Los Angeles Basin, which ends abruptly with the Newport-Inglewood uplift. The uplift is characterized by coastal mesas of late Miocene to early Pleistocene marine sediments and late Pleistocene marine terrace deposits.

Based on the geologic maps, the site is situated on Holocene alluvial soils. The near surface soils are characterized by young axial channel deposits. Figure 4 shows the regional geologic map of this section of Orange County.

3.2 Surface Conditions

The existing site is developed with approximately 475,000 square feet (sf) of retail and respective paved parking lots. An Orange County Flood Control (OCFD) culvert and easement diagonally crosses the northeastern corner of the property near the existing Chase Bank building. The current building configurations and pavement areas at the site are shown in the aerial image in Figure 3.

3.3 Subsurface Conditions

The subsurface soils at the site generally consist of three distinct soil zones to the maximum depth explored to 115 feet bgs, with the exception of CPT-1 where soil zone 3 described below was not well identified. The three soil zones are discussed below and have been schematically represented as cross-sections in Figure 5A and Figure 5B:

- Soil Zone 1 – The upper approximately 25 to 30 feet consists predominantly of medium stiff to stiff lean clay (CL) and fat clay (CH) that has a medium to high plasticity;
- Soil Zone 2 – Underlying soil zone 1 soils to a depth ranging between approximately 70 to 85 feet consists of a mixed soil condition with interbedded silty sand (SM), poorly-graded sands (SP) and lean clays (CL). CPT-1 located near the southwest property line exhibited this interbedded layer to depth explored.
- Soil Zone 3 – Underlying soil zone 2 is a very dense layer of poorly graded sands that ranges in thickness generally between 20 to 30 feet thick, with the exception of exploration CPT-1.

Preliminary analyses have been based on site-specific subsurface data. The subsurface stratigraphy has been interpreted based on the preliminary site investigation performed specifically for the Bristol Commons project. For planning purposes and to highlight slight variations in subsurface profile across the site, the subsurface stratigraphy in Figures 5A through 5D has been grouped north and south of Callen's Common. The generalized soil profile and preliminary engineering properties are summarized in Table 1 and presented on Figures 5C and 5D for the northern and southern portion of the property, respectively. These are preliminary design values for planning purposes and do not represent the actual thickness encountered at all exploration locations.

Table 1: Generalized Soil Profile

Generalized Soil Zone	Depth[(1)] (feet bgs)	Predominant Soil Type	Internal Friction Angle, ϕ (deg)	Undrained Shear Strength, Su (psf)
1	0 to 30	Lean Clay (CL) and Fat Clay (CH)	-	750
2	10 to 80	Silty Sand (SM) and Poorly-Graded Sands (SP) with Interbeds of clays (CL/CH)	35	-
3	80 to 100	Poorly-Graded Sands (SP)	39	-

Note:
(1) Soil zones south of Callen's Common were encountered at a shallower depth compared to generalized soil profile. Soil zone 1 was encountered as shallow as 25 ft bgs and soil zone 3 as shallow as 70 bgs.

The subsurface investigation included a site-specific assessment of the static (small-strain) $V_{s,30}$, the time-weighted average shear wave velocity in the top 100 feet (30 meters). The $V_{s,30}$ was evaluated as a direct measurement of shear wave velocity from a seismic CPT and represents soils with non-liquefaction (static) strengths. The results of the V_s readings for each of the 5-foot intervals are provided in Figures 5C and 5D. The $V_{s,30}$ was taken down to a depth of 100 feet bgs. The $V_{s,30}$ measurements indicate that soil is Site Class D.

3.3 Groundwater

Historic highest groundwater at the site has been mapped at a depth of about 5 feet bgs (CGS, 1997). Groundwater was encountered during the current preliminary site investigation between a depth of 12 feet and 16 feet bgs (El. 23 to 17 feet NAVD88). Groundwater levels measured during the geotechnical investigations are a "snapshot" of the groundwater level and do not account for potential fluctuations in groundwater level due to seasonal and tidal variations. No nearby existing groundwater monitoring wells were available for review of long-term groundwater trends. A temporary groundwater monitoring well was installed at boring B-1 and can be utilized for investigating seasonal variation.

3.4 Infiltration Rates

Our investigation included percolation testing at four locations shown in Figure 3. Percolation locations were drilled using a truck mounted rig to a maximum depth of 5 feet bgs. Groundwater was not encountered at the explored depths of the percolation test locations. Our field procedures were conducted in accordance with the Orange County Technical Guidance Document (OCTGD) for the Water Quality Management Plan (WQMP).

Percolation testing was performed in accordance with the OCTGD Section VII, Infiltration Rate Protocol and Factor of Safety Recommendations. The wells were installed using 3-inch-diameter schedule 40 PVC solid and screen-wall casing. Logs of the percolation borings are shown in Appendix A. After the completion of the percolation tests, the wells were abandoned, PVC pipes were removed, and the boreholes backfilled with clean sand and cold patch asphalt for finishing.

The results of the percolation field tests are summarized in Table 2. The onsite soils above the groundwater typically consist of lean clay materials and based on the percolation test results are not suitable for infiltration.

Table 2. Field Unfactored Infiltration Rates

Test ID (Boring)	Approximate Ground Elevation (feet)	Location	Field Infiltration Rate (in/hr)	Predominant Soil Type	Bottom of test hole Elevation (feet)	Depth of Test Interval (feet)
P-1	34	Boring B-1	<0.1	Lean Clay (CL)	29	0 to 5
P-2	33	CPT C-2	<0.1	Lean Clay (CL)	28	0 to 5
P-5	34	Boring B-5	<0.1	Lean Clay (CL)	29	0 to 5
P-6	34	CPT C-6	<0.1	Lean Clay (CL)	29	0 to 5

4.0 Discussion and Recommendations

4.1 Potential Seismic Hazards

The site is located in a seismically active region of Southern California. The site is subjected to seismic hazards during its design life. Potential seismic hazards include strong ground shaking, ground surface rupture due to faulting, liquefaction and seismic settlement, and slope instability. The following sections discuss these potential seismic hazards with respect to the proposed development.

4.1.1 Ground Surface Rupture

The site is not located within an Alquist-Priolo Earthquake Fault Zone and Figure 6 shows the site regional fault activity map of southern California. The closest two active faults are the San Joaquin Hills fault and Newport-Inglewood fault zones that are located at about 1.3 and 4.1 miles from the site, respectively. The San Joaquin Hills fault located closest to the site is a blind thrust fault that does not rupture at the ground surface. Due to the distance from the major faults, fault rupture is not a significant hazard for the site.

4.1.2 Liquefaction and Seismic Settlement

Liquefaction involves the sudden loss in strength of a saturated, cohesionless soil (sand and non-plastic silts) caused by the build-up of pore water pressure during cyclic loading, such as produced by an earthquake. This increase in pore water pressure can temporarily transform the soil into a fluid mass, resulting in vertical settlement and can also cause lateral ground deformations. Typically, liquefaction occurs in areas where there are loose to medium dense granular soils and the depth to groundwater is less than 50 feet from the surface.

Based on our site-specific field investigation, subsurface material at the site are predominantly clayey soils to a depth of approximately 30 feet below the existing ground surface and underlying soils are mixed soil condition with interbedded dense to very dense silty sand (SM), poorly-graded sands (SP) and lean clays (CL). Considering the cohesive and dense nature of the soils in the upper 50 feet, liquefaction is considered low.

4.1.3 Seismic Slope Stability

The site is generally level and no post-construction slopes are planned. Therefore, slope stability in not considered a hazard at the site. The site is not within a seismic-induced landslide hazard zone area.

4.1.4 Flood Hazard Zone

The project site is in an area with reduced flood risk due to levee and is determined to be outside the 0.2% annual chance floodplain as defined by the United States Federal Emergency Management Agency.

4.1.5 Other Seismic Hazards

All low-lying areas along California's coast are subject to potentially dangerous tsunamis. Due to the site being about 6 miles away from the ocean and site elevation (about El. 34 feet), tsunamis are not a hazard at the site.

4.2 Preliminary Seismic Design Parameters

Mapped seismic design acceleration parameters were developed in accordance with 2019 California Building Code (CBC) and ASCE 7-16 (ASCE/SEI 7-16). Based on the subsurface exploration and underlying geology, the site classification for seismic design is Site Class D, in accordance with Chapter 20 of ASCE 7-16. The preliminary seismic design parameters for the site were calculated using the SEAOC/OSHPD Seismic Design Mapping Tool (Version 5.1.0) and are presented in Table 3.

Table 3. Preliminary Seismic Design Parameters

Parameter (Latitude: 33.6970, Longitude: -117.8871)	**Value**
Site Class	D
Mapped MCE Spectral Response Acceleration at Short Period (S_S)	1.287
Mapped MCE Spectral Response Acceleration at Period of 1 Second (S_1)	0.462
Site Coefficient, F_a	1.0
Site Coefficient, F_v	1.838
Adjusted MCE Spectral Response Acceleration at Short Period (S_{MS})	1.287
Adjusted MCE Spectral Response Acceleration at Period of 1 Second (S_{M1})	0.849
Design Earthquake Spectral Response Acceleration at Short Period (S_{DS})	0.858
Design Earthquake Spectral Response Acceleration at Period of 1 Second (S_{D1})	0.566
Peak Ground Acceleration Adjusted for Site Class (PGA_M)	0.550

Mapped design acceleration parameters are required to meet Exception 2 of Section 11.4.8 of ASCE 7-16. for Site Class D. Therefore the mapped design values may only be used if Exception 2 below is met:

- **If $T \leq 1.5\ T_S$**: The value of the seismic response coefficient C_S is determined by Eq. (12.8-2), i.e., S_{DS} is used to obtain C_S
- **If $T_L \geq T > 1.5\ T_S$**: The value of seismic response coefficient C_S is taken as ***1.5 times*** the value computed in Eq. (12.8-3), i.e., ***1.5***$*S_{D1}$ is used to obtain C_S, or
- **If $T > T_L$**: The value of seismic response coefficient C_S is taken as ***1.5 times*** the value computed in Eq. (12.8-4), i.e., ***1.5***$*S_{D1}$ is used to obtain C_S.

Based on this exception, if the fundamental period is less than or equal to $1.5T_S$, S_{DS} must be used to determine the seismic response coefficient, C_S, with equation 12.8-2. If the fundamental period is higher than 1.5 T_S (longer period structures), then the determination of C_S is increased by a factor of 1.5.

Depending upon the structure type, fundamental period of the structure, and structural analysis method, either site-specific values or mapped values (meeting Exception 2 of ASCE 7-16, Section 11.4.8) may be used. However, a site-specific acceleration response spectrum is recommended for final design if tall buildings are progressed into the final concept and can be provided in accordance with Chapter 21 of ASCE 7-16.

4.3 Expansive Soils

The upper 25 to 30 feet bgs of the site is generally composed of clayey material that are medium to highly expansive. Expansion and contraction can occur when expansive soils undergo alternating cycles of wetting (swelling) and drying (shrinking). During these cycles, the volume of the soil changes markedly, and can cause structural damage to buildings and infrastructure. Expansive soils are generally high plasticity clays.

Expansion index testing was performed on two soil samples collected in the recent investigation. The tests were performed on bulk sample of the upper 5 feet from borings B-1 and B-5 that, respectively, had an expansion index of 85 and 120, which indicates a medium to high expansion potential. Based on the Atterberg limit testing performed for the proposed project, the soils tested had liquid limits greater than 46 and plasticity index greater than 31. Moderately to highly expansive soils are present at the site and the foundation should be designed to resist these expansion pressures or these soils should be removed to sufficient depth.

4.4 Soil Corrosion Potential

The subsurface soils in the upper 25 to 30 feet generally consist of lean and fat clay alluvial deposits. One representative sample of the near surface soils from Borings B-4 was tested to evaluate corrosion characteristics. The test included pH, electrical resistivity, soluble chloride, and soluble sulfate concentrations. Test results are summarized in Table 4 below and are provided in Appendix B.

Table 4. Corrosion Potential Test Results

Sample/Depth	pH	Resistivity [Ohm-cm]	Sulfate Content [ppm]	Chloride Content [ppm]
B-4 @ 0-5’	7.7	371	10,274	377

Based on large sulfate content of the test sample, the near surface soils are considered corrosive to concrete. The correlation below can generally be used between electrical resistivity and corrosion potential.

Electrical Resistivity (Ohm-Cm)	Corrosion Potential
Less than 1,000	Severe
1,000 to 2,000	Corrosive
2,000 to 10,000	Moderate
Greater than 10,000	Mild

Based on the soluble chloride concentration and electrical resistivity results, the test sample is classified as severely corrosive to buried metals. Further evaluation/testing and recommendations for corrosion protection should be provided by a corrosion consultant.

5.0 PRELIMINARY FOUNDATION RECOMMENDATIONS

5.1 General

Based on our understanding of the conceptual plan for the proposed development, several building typologies and associated loading demands have been considered for planning purposes to identify feasibility of foundation types. At-grade and one subterranean level are being considered at this stage for most structures with the exception of wrap-around Type III wood residential structures. For the purpose of preliminary foundation design the following structures have been evaluated:

- Five-story Type III wood frame residential structure at-grade or one-level below grade (e.g. wrap-around residential);
- Podium Structure - three-story concrete podium with five-story Type III wood construction above the podium;
- Six-story or shorter concrete structure (e.g. business and residential)
- Eight-story or taller concrete structure (e.g. hotel and residential)
- Five-story concrete short-span parking structure (e.g. residential wrap-around parking);
- Six-story concrete long-span parking structure (e.g. centralized mixed-use parking);

Preliminary structural loads have been provided by DCI Engineers for the aforementioned structure types and are presented in Figure 7.

Geotechnical design considerations at the site include:

- Shallow groundwater (measured at approximately 12 ft bgs);
- Shallow expansive clayey soils (from ground surface to approximately 25 to 30 ft bgs);
- Moderately compressible soils and settlement potential; and
- Low infiltration rates.

Expansive soils at the site will require mitigation measures and/or incorporation of expansive forces into structural design to protect the proposed development from cyclic expansion and contraction from wetting and drying. The mitigation measures could include special drainage provisions to minimize water infiltration into soils below structures and/or overexcavation and replacement of expansive soils below foundations, slabs and flat work (see Section 5.8). Foundations, slabs and flatwork can be structurally designed to resist bending forces in-lieu of removal and replacement of existing soils. Removal and replacement will require import of very low expansive soils as discussed in Section 6.4.

One subterranean level is being considered for podium structures to facilitate additional parking below ground and it has been assumed for preliminary design that the foundation would be situated approximately 14 ft bgs. Due to the shallow design groundwater level consistent with

the mapped historic high, the subterranean level walls will require waterproofing and the foundation will require design for buoyant forces.

Group Delta believes there are several types of foundations that may be utilized at the site and choice is dependent on the building typology and whether the building is built at grade or with one subterranean level. The preliminary recommendations for foundation design are provided in the sections below and has been summarized in Figure 7.

5.2 Type III Wood Frame Residential Structures

A five-story Type III wood construction residential building at-grade or one-level below grade can be founded on conventional shallow foundations, mat slab, post-tension slab, or deep foundations. Based on the presence of the expansive material, a normal slab on grade is not feasible without removal and replacement of 4 feet of expansive material with low expansive material and recommendations in Section 5.8 should be followed.

The following preliminary design criteria for shallow foundations are recommended:

- Shallow spread footings should have a minimum dimension of 2 feet;
- Shallow continuous footings should have a minimum dimension of 1.5 feet;
- Individual spread footings should bear on a minimum of 4 feet of low expansive fill;
- Preliminary allowable bearing pressure are provided in Table 5 and these recommended bearing values may be increased by one-third for wind, seismic or other transient loading conditions;
- Short term static settlements for the footing pressures in Table 5 are expected to be 1 inch or less; and
- A differential settlement equal to one-half of the total settlement over a distance of 30 feet can be used for planning purposes.

Table 5. Allowable Bearing Pressure for Type III At-Grade Wood Structures

Footing Width (Feet)	**Allowable Bearing Pressure (1) (psf)**
2	1,800
5	1,100

Note:
(1) Values can be linearly interpreted for intermediate footing widths.
(2) Values determined based on 1 inch of settlement or less.

As an alternative to shallow foundations a mat slab, post-tensioned slab or deep foundation could be utilized. Mat or post-tensioned slabs should be a minimum embedment of 24-inches below the lowest adjacent soil grade and designed by the structural engineer for high expansion potential, if removal and replacement with low expansive material is not chosen. Deep foundations discussed in Section 5.4 are also a viable foundation option.

5.3 Podium Structures

Podium structures vary from one- to three-story of concrete podium above ground with up to five-story of wood construction above the podium. The podium structures are also planned to have one-level below grade. The maximum loads of the three-story concrete podium and basement level with five-story of Type III wood construction above the podium is considered for evaluation of the foundation options.

Mat slabs are capable of providing satisfactory support to podium structures one-level below grade, if designed to reduce concentrated bearing loads from column loads and design to resist expansive soil. The amount of settlement will be dependent on the rigidity of the mat slab and transmission of loading to the ground. Mat slab foundations have a variable capacity to spread loading from column and perimeter wall loads. The two extremes can be thought of as a concentrated larger direct column point load when there is a very thin slab to a fairly uniform loading across the foundation when there is a very thick and heavily reinforce slab. The mat slab should be designed by the structural engineer and the preliminary column spacing has been assumed to be at 30 feet center-to-center.

Preliminary settlement analyses have been performed and are provided in Table 6 to provide an anticipated performance criterion for preliminary planning of the structural thickness and reinforcement of the mat slab. The preliminary settlement analyses consider the following two scenarios:

1. Uniform loading over a large mat slab footprint that evaluates impacts of settlement to greater depths; and
2. An equivalent footing loading with variable concentrated bearing load over smaller areas to represent mat slabs that are not perfectly rigid.

Table 6. Mat Slab (One-Level Below Grade) Settlement Estimates

Foundation Element	Footing Width (feet)	Footing Length (feet)	Bearing Load (psf)	Estimated Settlement (inches)
Uniform Mat	300	300	900	2.0
Column Loading on Equivalent Footing	15	15	3,500	4.6
	20	20	2,000	2.9
	25	25	1,250	1.7
	30	30	900	1.1

Ground improvement can be utilized to control total and differential settlements as discussed in Section 5.6. As an alternative, deep foundations as discussed in Section 5.4 may be utilized. Post-tension slabs may be utilized as a structural slab to resist expansive soils if a mat is not preferred and either deep foundations or ground improvement will be required.

5.4 Concrete Structures

5.4.1 Concrete Structures 6-Story or Less

Six-story or shorter concreate structures are being considered for the project with either one or two basement levels. These structures have similar loads as the podium structures with preliminary column loads provided in Figure 7. The column loads of the four-story to six-story concrete structures range from 490 kips to 750 kips. Therefore, six-story concrete structures with basement levels can follow the foundation recommendations in Sections 5.3.

5.4.2 Concrete Structures 8-Story or Taller

Eight-story or taller concrete structures are being considered with one level of basement, such as a hotel, residential, and assisted living facilities. Deep foundations are necessary to support taller than eight-story concrete structures at the site. Shallow and mat slab foundations are not considered feasible for these structures given the large column loads and potential settlement. Preliminary column loads provided in Figure 7 indicate that from eight-story to 24-story the column loads range from 1,020 kips to 3,280 kips. In addition, a structural slab on grade will be required to address expansive forces of the soil and inclusion of a subterranean level would need to design for hydrostatic buoyant forces.

The following deep foundations have been considered for the project:

- Driven piles;
- Drilled shafts (also referenced as Cast-In-Drilled-Hole, CIDH piles); and
- Auger cast piles.

It is Group Delta's opinion that the ACD piles provide the most benefit for the project considering the planned staging of construction and subsurface conditions. ACD piles are installed by rotating a continuous flight hollow shaft auger into the soil to a specified depth. High strength sand cement grout is pumped through the hollow shaft as the auger is slowly withdrawn while slowly turning in a clockwise direction. While the cement grout is still fluid, reinforcing steel is then inserted into the pile. The resulting grout column hardens and forms an ACD pile. Advantages of the ACD piles compared to the other foundation recommendations are listed below:

- **Less noise** – ACD piles and CIDH piles are drilled and pumped and not driven. This eliminates the hammer impact noise created by driven piles;
- **Minimizes vibrations** – Minimal vibrations are generated during construction that limits vibrations at adjacent structures, walls, and other structural components compared to larger vibrations that may occur from other methods such as pile driving;
- **Protects against caving during construction** – Due to the presence of shallow groundwater and collapsible sands, CIDH piles would require casing or slurry (referred to as 'wet' method) for construction, not required for driven and ACD piles; and
- **Minimizes soil cuttings** – CIDH piles generate large amounts of soil cuttings that require more export transportation off-site compared to driven and ACD piles.

The following section present preliminary deep foundation recommendations for ACD piles.

5.4.2.1 Auger-Cast-Displacement (ACD) Pile

ACD piles are recommended to support buildings with large column loads to control total and differential settlements. ACD pile diameters typically range from 12-inches to 24-inches. For planning purposes we have provided preliminary ultimate axial capacities for a 16-inch and 24-inch diameter ACD pile in Figure 8A and Figure 8B, respectively. Figures 8A and 8B present the preliminary ultimate tension (upward) capacity and two compression (downward) axial capacities. The compression axial capacities are presented for purely frictional piles and piles that gain capacities from friction along the pile and from the tip of the pile (end bearing). Generally end bearing is mobilized when ACD and driven piles are tipped in a dense sand. This will be achieved in soil zone 3 that typically has a very dense sand layer at least 20 feet thick and may be partially achieved in soil zone 2 that is interbedded. The depth and thickness of these layers should be investigated during final design at the proposed building footprints as there is some variability in the depth of these layers. Therefore, for planning purposes the skin friction piles can be utilized for preliminary pile lengths.

Allowable axial capacities should include a factor of safety for determination of the pile lengths. The ultimate capacities include in Figures 8A and 8B include no factor of safety. An allowable

downward axial capacity should consider a factor of safety of 2. The allowable would be for dead-plus-live load capacity, where a one-third increase may be used for wind or seismic loads. The allowable upward axial capacity should consider a factor of safety of 3. Uplift due to wind or seismic loading may use a reduced factor of safety of 2. These capacities are based on the strength of the soils; the compressive and tensile strengths of the pile sections will need to be checked to verify the structural capacity of the piles.

For preliminary structural analyses, 16-inch-diameter ACD piles extending to 40 feet to 60 feet below ground should achieve an ultimate axial downward capacity on the order of 200 kip and 400 kips respectively (i.e., allowable of 100 to 200 kips). For planning purposes the downward capacity has been determined from skin friction. During final design piles sufficiently embedded (at least 1.5 diameter) in sand layers may have larger capacities due to well mobilized end bearing resistance as shown in Figures 8A and 8B. The sand layers in soil zone 2 were of variable thickness and not continuous across the project site. During final design, the sand layers in soil zone 2 will be further evaluated for continuity across a building's footprint for potential use of end bearing in the final foundations to decrease the pile lengths.

5.4.2.2 Driven Steel Pipe Pile

Driven steel pipe piles are feasible as a secondary option. Driven pile feasibility is highly dependent on acceptability of noise and vibration generation. Pipe piles could be driven with closed-end or open-ended. Open-ended pipe piles are better suited to penetrate the interbedded dense to very dense sands in soil zone 2 and very dense sands in soil zone 3 compared to closed-ended piles. For planning purposes 16-inch-diameter pipe piles can be assumed to be the same capacity as the ACD piles in Section 5.4.2.1.

Pile driving equipment will need to produce a sufficient amount of energy to install the piles to the required depths. A pile drivability analysis should be performed by a piling contractor that considered the proposed pile/hammer configuration and driving equipment.

5.5 Parking Structures

Parking structures considered for this study include a five-story short-span concrete parking structure considered for residential wrap-around parking and a long-span parking structure considered for a higher capacity centralized mixed-use parking that maybe constructed in the initial phase of development to support subsequent phase development.

5.5.1 Short-Span Parking

A short-span parking structure column loading is similar to that of a podium structure, as shown in Figure 7. Therefore, at-grade short-span parking structures can follow the foundation recommendations in Sections 5.3. Ground improvement as discussed in Section 5.6 should be considered for planning purposes to control settlements that are anticipated to be at least 2-inches. Parking structures typically can accommodate more settlement and there may be

opportunity to decrease ground improvement quantities if more settlement is allowed by the structural engineer.

5.5.2 Long-Span Parking

Long-span parking structures have column loads that are larger than 1,000 kips and a deep foundation is recommended to control total and differential settlements. Therefore, long-span parking structures can follow the foundation recommendations in Sections 5.4.2.

5.6 Ground Improvement – Aggregate (Stone) Columns

Ground improvement has been recommended for several building types in other sections of this report in conjunction with a mat or post-tensioned slab foundation to control long-term total and differential settlements. Based on the preliminary subsurface profile the upper 25 to 30 feet of soil is predominantly lean clay and fat clay that is prone to long-term settlements and poor bearing capacity without proper mitigation. Ground improvement is recommended to extend from the bottom of footing through soil zone 1 (discussed in Section 3.3. and shown in Figures 5A and 5B).

Several methods can be considered for ground improvement such as deep soil mixing or grouting techniques; however, these may not be economically feasible at the project site. Aggregate (stone) columns are considered economically feasible for ground improvement of the project site and recommendations for other options can be provided upon request.

Aggregate (stone) columns construction involves the introduction of rock material into the native material by downhole vibratory or ramming methods. Stone column construction is often referenced as vibro-replacement or vibro-displacement that can be a top or bottom feed process to install stone columns to the targeted depths. Alternative to vibration methods include rammed aggregate piers (RAP) that are installed by drilling and ramming lifts of well-graded aggregate to form the high-density columns.

A qualified soil improvement contractor should be selected and provide design of the depth, spacing, and size of the zone of treatment based on the target foundation design parameters and their design requirements. Preliminary cost estimates have been provided by a specialty contractor to provide a rough order of magnitude for planning purposes. The aggregate columns are estimated to cost $12 per square foot of improvement for an at-grade structure and $8 per square foot for a building with one-subterranean level. The total depth of improvement is anticipated to be on the order of 25 to 30 feet deep for the at-grade structure with a reduction of the excavation for a below grade level. Mobilization cost for this technique are modest and division into individual phases will not result in a large cost difference as opposed to one individual phase.

Quality control procedures for installation and verification of material strengths will need to be developed and implemented in final design.

5.7 Basement Walls

Basement walls should be designed to resist at-rest earth pressures. Accordingly, for the case where the grade is level behind the walls, a triangular distribution of lateral earth pressure equivalent to that developed by a fluid with a density of 60 pounds per cubic foot. This earth pressure assumes that all walls are constructed with a properly designed drainage system to prevent buildup of hydrostatic pressures behind the wall. The walls should be designed to accommodate hydrostatic pressure based on the assumed historical high groundwater table (5 feet below the existing ground surface). Any surcharge loadings, such as stockpiled materials or traffic, should be added to the lateral pressure. The recommended pressure should also be confirmed during the design-level geotechnical investigation.

Basement walls should also be designed for seismic earth pressure. Assuming the basement wall is backfilled with compacted sands, the basement walls should be designed to resist, an active pressure combined with a seismic increment of lateral earth pressure. Seismic loading is based a horizontal coefficient (k_{eq}) of 0.23g, which is corresponding to one-half of the design peak ground acceleration (PGA_M) that is 0.55g. The active pressure combined with seismic increment of 60 pcf may be used for design of basement wall. If cohesive soils are not removed from behind the wall (about 1H:1V up from footing), higher earth pressure than the above will be exerted on the wall. The recommended value of earth pressure should be confirmed in the design geotechnical report.

5.8 Slabs-on-Grade

Concrete floor slabs and hardscape should be installed on a properly prepared subgrade and should be designed for the expansion potential of the supporting subgrade, as discussed in the following sections. To reduce the potential for moisture transmission through the floor slab, we recommend that a minimum 6-mm thick Visqueen moisture barrier be placed under the slab prior to the placement of concrete. The moisture barrier should be sandwiched between two layers of select sand, each with a minimum thickness of 2 inches. Care shall be taken not to puncture the moisture barrier during construction. Any utility stub-outs should be properly wrapped and sealed.

The local standard of practice for the design and construction of foundations, slabs and hardscape supported with a medium to high expansion potential is provided below. Structural design requirements may require greater thickness and/or more reinforcing than indicated, and should be evaluated by the structural engineer.

- Footings should be founded at least 24 inches below lowest adjacent grade.
- Footings should be reinforced with two #4 bars top and bottom.
- Floor slab should be at least 4 inches thick and should be reinforced with #3 bars at 18 inches on center, each way.

- Prior to placing concrete, the subgrade should be pre-saturated to 120 percent of the optimum to a depth of at least 18 inches below the bottom of the footing or slab.
- Concrete slabs and hardscape should have a maximum joint spacing of 10 feet; #3 bars dowels at construction joints; and the outside edge should be deepened to a thickness of 12 inches. One #3 bar should be used to reinforce the flared edge area.
- The adjacent area should be sloped at 2 percent or greater, to drain away from slabs and pavement.
- For additional protection, consideration should also be given to removing the upper 12 inches of expansive soil below the slab and replacing it with very low expansive sandy material having an EI of less than 20.
- Bushes, trees, and irrigation pipes and valves should be kept sufficiently away from the edges of foundations and walkways to prevent root damage and/or moisture changes in the supporting subgrade.

6.0 CONSTRUCTION CONSIDERATIONS

6.1 Groundwater Issues

Groundwater levels measured at the site were as high as about El. 23 to 17 feet (12 to 16 feet bgs) as measured during the recent field investigation and as presented in Appendix A. Excavations within a few feet of the measured groundwater elevations are anticipated to need stabilization. If wet or unstable subgrade is encountered, stabilization may consist of the placement of a granular working mat consisting of geogrid and coarse gravel or subexcavation and replacement with dried soil.

Due to clayey nature (low permeability) of the onsite soils, dewatering through dewatering well to lower groundwater table during construction may not be feasible. Sump area may be needed at the bottom of excavation to collect groundwater inflow and pumped to a storm drain. Groundwater should be evaluated to determine if treatment is required before transported to storm drain.

Groundwater levels can fluctuate due to seasonal rainfall amount, local irrigation and groundwater recharge programs and other man-made conditions. A temporary groundwater monitoring well has been installed at Boring B-1 and should be periodically monitored to evaluate seasonal variability.

6.2 Construction Phasing

Construction is proposed in phases allowing construction to move forward while keeping some existing businesses in operation. The conceptual construction phasing is shown in Figure 2B and several phases may be progressed simultaneously. The construction phasing should consider utility needs servicing the site and potential conflicts from subsequent excavations. A temporary excavation plan should be developed considering the staged construction and potential impact from or to already constructed buildings.

6.3 Adjacent Structure

The project is considering several building typologies including both at-grade and inclusion of subterranean levels. Permanent loads and construction loading (or unloading) on adjacent structures should be considered and evaluated as part of the final design. Project phasing will need to consider both existing structures and phased construction in temporary shoring and cutback approaches to excavations.

An existing Orange County Flood Control (OCFD) culvert and easement diagonally crosses the northeastern corner of the property near the existing Chase Bank Building. Final building layouts should avoid vertical and lateral loads on the existing culvert.

6.4 On-Site and Imported Fills

On-site soils in the upper 25 to 30 feet bgs are predominantly lean clays and fat clays. If the foundations are designed for expansive soils, on-site clayey soils, after clearing and grubbing and removal of deleterious materials, may be used for compacted fills. On-site soils will not be suitable for specific purposes where very low expansive granular fill is required.

Very low expansive imported borrow will most likely be used as replacement material below slabs and shallow foundations at the site. Very low expansive material should have an EI of less than 20. Additionally import borrow should have a maximum particle size of 6 inches, have less than 35% passing no. 200 sieve, and have a Plasticity Index (PI) of 12 or less. Prospective imported borrow materials should be tested at the borrow site to verify they are acceptable for the intended use prior to purchase and import. Any imported soil should also be evaluated for corrosion characteristics if they will be with buried or at grade structures and appropriate mitigative measure should be included.

6.5 Temporary Excavation and Shoring

Excavations for construction of subterranean levels are anticipated to be as deep as 14 feet below existing grade. Excavations can be readily accomplished with light to moderate effort using conventional heavy-duty grading equipment such as scrapers, loaders, dozers, and excavators. The contractor will be responsible for excavation safety, and all excavations should comply with the current California and Federal Occupational Safety and Health Administration (CALOSHA) requirements (29 CFR-Part 1926, Subpart P), as applicable. Temporary slopes, up to 20 feet high, may be cut at a gradient of 1.5H:1V (horizontal:vertical) with the bottom 4 feet is permitted to be cut vertically. Unshored excavations should not extend below a 1H:1V plane extending down from any improvements or foundations to be protected in place.

If sloping or benching is not practical due to space constraints, temporary shoring may be used. Vertical temporary excavations deeper than 5 feet should be shored. No surcharge loads should be permitted within a horizontal distance equal to the height of cut or 5 feet, whichever is greater from the top of the excavation, unless the shoring is designed for surcharge loading. All shoring should comply with OSHA regulations and 29 CFR Part 1926 guidelines and be observed and deemed safe by the designated competent person on site. The designated competent person should observe all excavations to determine the safety prior to excavation.

6.6 Pile and Ground Improvement Load Testing

Auger cast piles and the aggregate piers will require load testing during construction. Pile lengths can be optimized by advancing a pilot test program before final design to compare the design axial capacities to measured values. If sufficient time is allowed between construction phases shown in Figure 2B, then there may be opportunity to incorporate load testing from a previous stage into future design at the site.

The static axial pile load testing program for ACD piles will generally consist of the following:

- Number of static load tests:

Total Production Piles	No. of Static Load Tests Required
<100	1
101-300	2
301-1000	3
1001-2000	4
2001-4000	5

- Minimum one (1) pile load test shall be performed per 30,000 square feet of building footprint;
- Gamma-Gamma Test and Low Strain Integrity Test shall be conducted on all test piles and reaction piles;
- Low Strain Integrity Test shall be performed on 10% of the production piles.

In addition to testing each pile to the ASTM 1143 standards, a creep test is recommended at the allowable load. The creep test holds the allowable load for at least two hours to demonstrate displacement of the test pile slows to less than 0.005 inch per hour, which is half the rate recommended in ASTM 1143.

6.0 Additional Investigations for Final Design and Construction

The current scope of work identified the general characteristics of the subsurface soils and identified shallow expansive soils, static and seismic settlement, and relatively shallow groundwater as potential issues for the proposed development. Design level geotechnical investigations should be planned when building types and configurations are determined. The design level investigation should include installation of monitoring wells, borings and CPTs to further characterize the subsurface.

During construction phase, the scope of geotechnical testing and inspections will depend on foundation type. For planning purposes, for shallow foundations, geotechnical observation and testing of grading operations will be required. For deep foundations, geotechnical observation of pile installation, installation of test piles and furnishing of pile load test results will be required.

7.0 LIMITATIONS

This investigation was performed in accordance with generally accepted Geotechnical Engineering principles and practice. The professional engineering work and judgments presented in this report meet the standard of care of our profession at this time. No other warranty, expressed or implied, is made. This report has been prepared for Related California Residential, LLC and their design consultants. It may not contain sufficient information for other parties or other purposes, and should not be used for other projects or other purposes without review and approval by Group Delta.

The recommendations for this project, to a high degree, are dependent upon proper quality control of site grading, fill and backfill placement, and pile foundation installation. The recommendations are made contingent on the opportunity for Group Delta to provide final geotechnical recommendations and observe the earthwork operations. This firm should be notified of any pertinent changes in the project, or if conditions are encountered in the field, which differ from those described herein. If parties other than Group Delta are engaged to provide such services, they must be notified that they will be required to assume complete responsibility for the geotechnical phase of the project, and must either concur with the recommendations in this report or provide alternate recommendations.

8.0 REFERENCES

California Department of Conservation, Division of Mines and Geology, 1990, "Fault-Rupture Hazard Zones in California, Alquist-Priolo Special Studies Zones Act of 1972," Special Publication 42, Department of Conservation, California Division of Mines and Geology.

California Building Code (CBC), 2019, published by International Conference of Building Officials, Whittier, California.

California Geological Survey, "Guidelines for Evaluating and Mitigating Seismic Hazards in California," Special Publication 117A, dated 2008.

California Geological Survey (CGS, 1997). Seismic Hazard Zone Report for the Anaheim and Newport Beach 7.5-minute Quadrangle, Orange County, California. Seismic Hazard Zone Report 03.

SEAOC/OSHPD Seismic Design Maps, https://seismicmaps.org/, accessed February 28, 2019.

Youd, T. L., et al., "Liquefaction Resistance of Soils: Summary Report from the 1996 NCEER and 1998 NCEER/NSF Workshops on Evaluation of Liquefaction Resistance of Soils", Journal of Geotechnical and Geoenvironmental Engineering, Vol. 127, No. 10, October 2001.

FIGURES



N

NOT TO SCALE

GROUP DELTA	**GROUP DELTA CONSULTANTS, INC.** ENGINEERS AND GEOLOGISTS 32 MAUCHLY, SUITE B IRVINE, CA 92618 (949) 450-2100	FIGURE NO.: **1**
	PROJECT NAME: Bristol Commons, Santa Ana, CA	PROJECT NO.: IR737
	SITE LOCATION MAP	



Note: The initial concept is provided for visualization and discussion. The proposed building geometries and types are subject to change.

NOT TO SCALE

GROUP DELTA

GROUP DELTA CONSULTANTS, INC.
ENGINEERS AND GEOLOGISTS
32 MAUCHLY, SUITE B
IRVINE, CA 92618 (949) 450-2100

FIGURE NO.: 2A

PROJECT NAME: Bristol Commons, Santa Ana, CA

PROJECT NO.: IR737

CONCEPTUAL MASTER PLAN



N

NOT TO SCALE

GROUP DELTA

GROUP DELTA CONSULTANTS, INC.
ENGINEERS AND GEOLOGISTS
32 MAUCHLY, SUITE B
IRVINE, CA 92618 (949) 450-2100

FIGURE NO.:
2B

PROJECT NAME:
Bristol Commons,
Santa Ana, CA

PROJECT NO.:
IR737

CONCEPTUAL PHASING PLAN

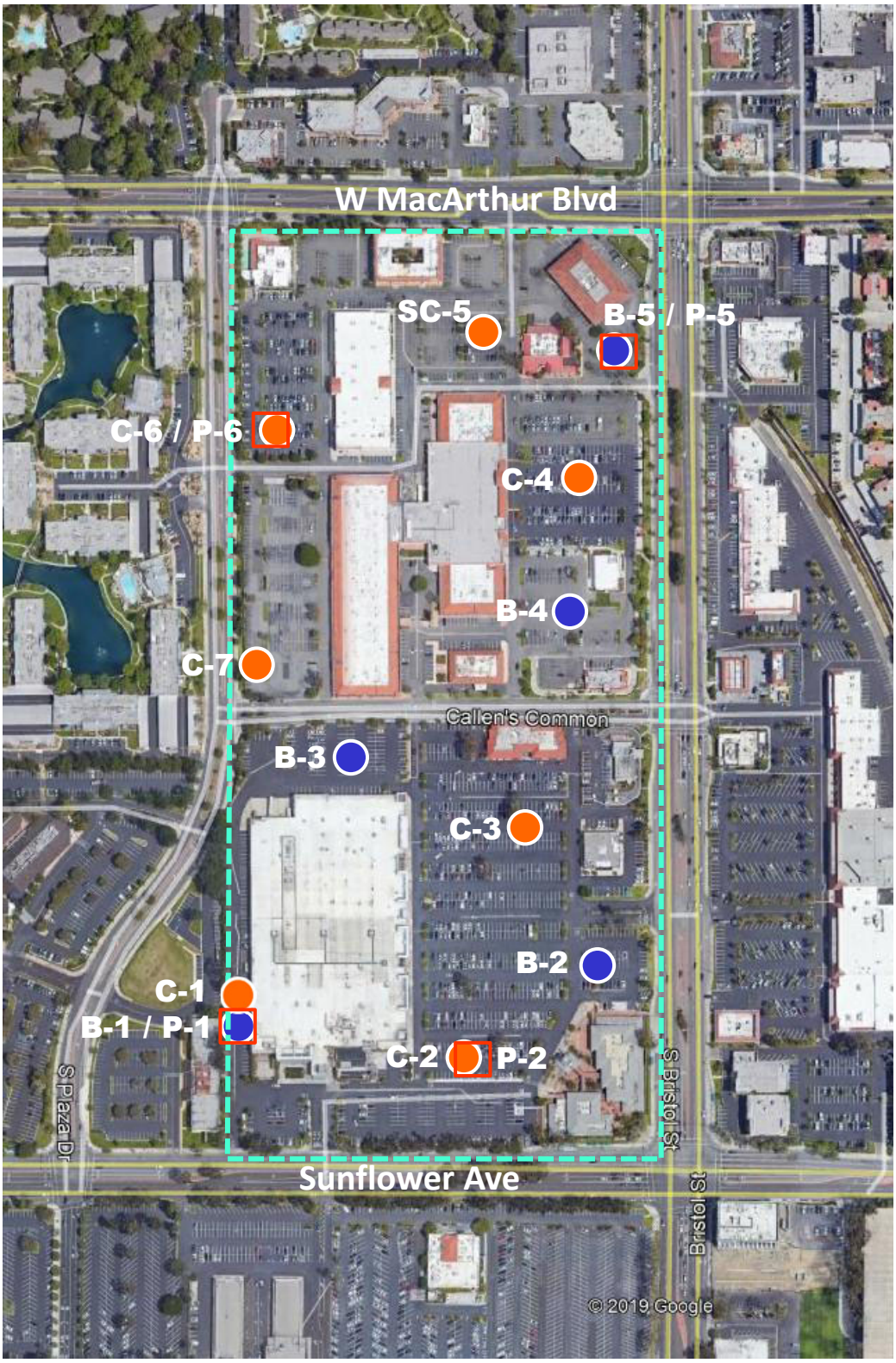

Approximate Site Boundary

Boring Locations

Cone Penetration Test Locations

Percolation Test Locations

GROUP DELTA	GROUP DELTA CONSULTANTS, INC. ENGINEERS AND GEOLOGISTS 32 MAUCHLY, SUITE B IRVINE, CA 92618 (949) 450-2100	FIGURE NO.: **3**
	PROJECT NAME: Bristol Commons, Santa Ana, CA	PROJECT NO.: IR737
	EXPLORATION LOCATION PLAN	

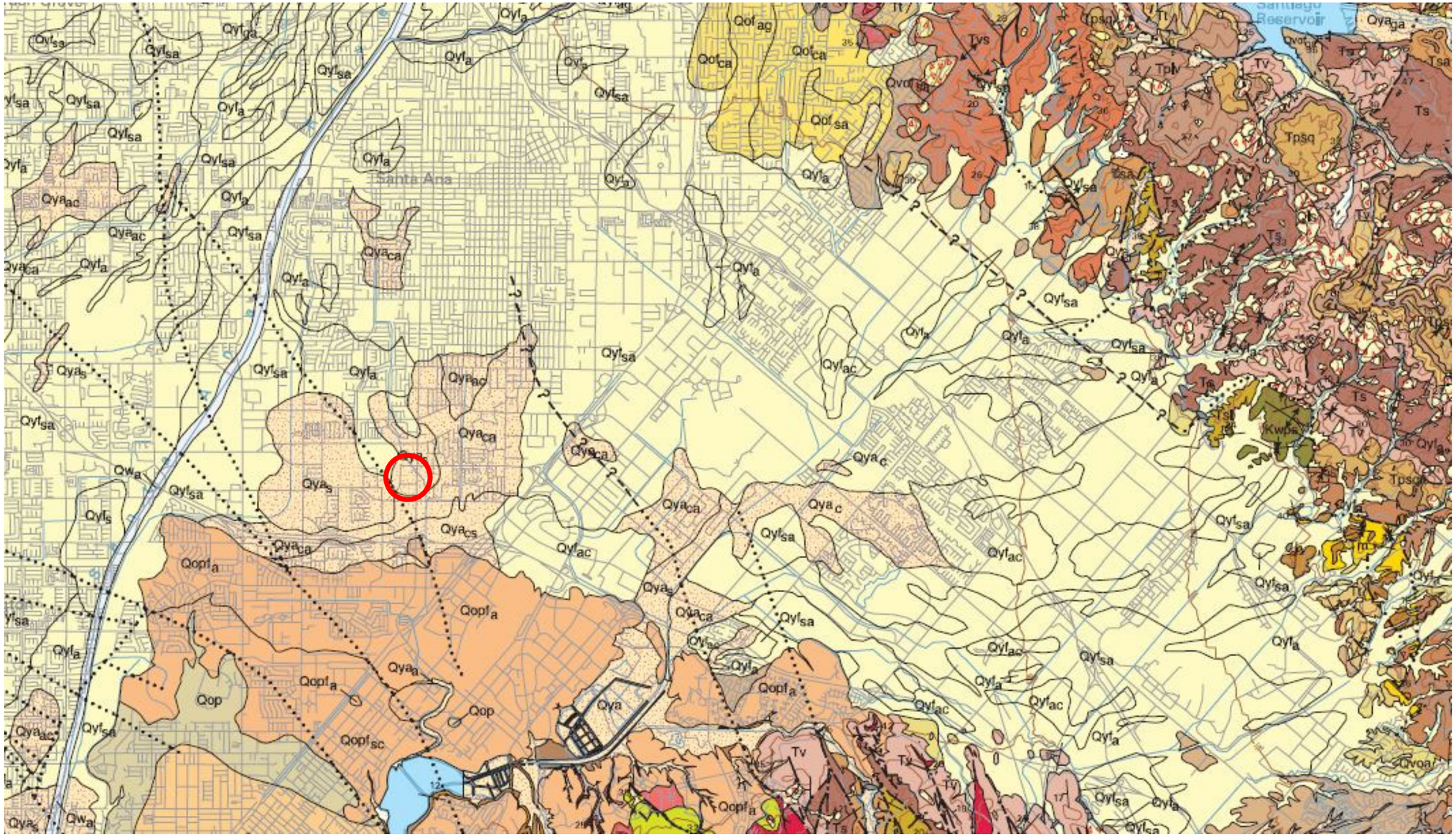
Santa Ana
Santiago Reservoir
Qyf1a
Qyf1sa
Qyf1ac
Qyf1ag
Qyf1ga
Qyf1s
Qyf1se
Qyf1ca
Qyf1sc
Qyf1
Qyaac
Qyaca
Qyaa
Qyaac
Qyaca
Qyas
Qyacs
Qyac
Qyaa
Qyaca
Qyas
Qyaca
Qyac
Qyaca
Qyaac
Qyaca
Qyaa
Qyaca
Qyaac
Qyaca
Qyaac
Qyaca
Qyaac

PLAZA DR
A

BRISTOL ST
A'

APPROX. GROUND SURFACE
ALONG SECTION A-A'

C-7 33'

C-6 (PROJ.) 34'

B-4 (PROJ.) 35'

C-4 (PROJ.) 32'

SC-5 (PROJ.) 36'

B-5 (PROJ.) 34'

APPROX. GROUND WATER LEVEL

EXPLANSIVE CLAY

INTERBEDDED SAND AND CLAY

DENSE SAND

POCKET PEN. TEST

BLOW COUNT (N)

USCS CLASSIFICATION

B-4 (PROJ.)

AC		
CL		
CL-ML	8	
CL	1.25	16
CH	0.75	11
		4
CL-ML	4.5	14
SC		26
SP		49
		50
		50
CL		50

B-5 (PROJ.)

AC		
CL		
	2.0	19
CH		3
	1.0	11
	0.5	7
CL	2.0	12
CL-ML		20

Friction Ratio (%) 8.0 4.0 0.0 — Tip Bearing (tsf) 200 400

ELEVATION (FT.)

50 40 30 20 10 0 -10 -20 -30 -40 -50 -60 -70 -80 -90

0 150 300 450 600 750 900 1050 1200 1350

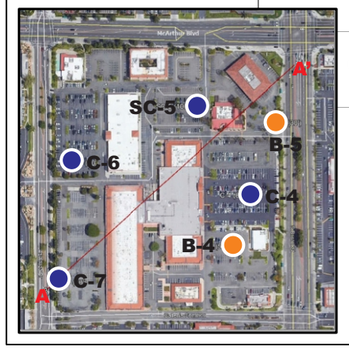

Notes:

Stratigraphic boundaries are shown here to illustrate generic soil types for use in preliminary design. Conditions encountered during construction will vary from those represented on the figure. Additional geotechnical data collection is recommended at final design.

GROUP DELTA

GROUP DELTA CONSULTANTS, INC.
ENGINEERS AND GEOLOGISTS
32 MAUCHLY, SUITE B
IRVINE, CA 92618 (949) 450-2100

FIGURE NUMBER
5A

PROJECT NAME
BRISTOL COMMONS
SANTA ANA, CALIFORNIA

PROJECT NUMBER
IR-737

CROSS SECTION A-A'

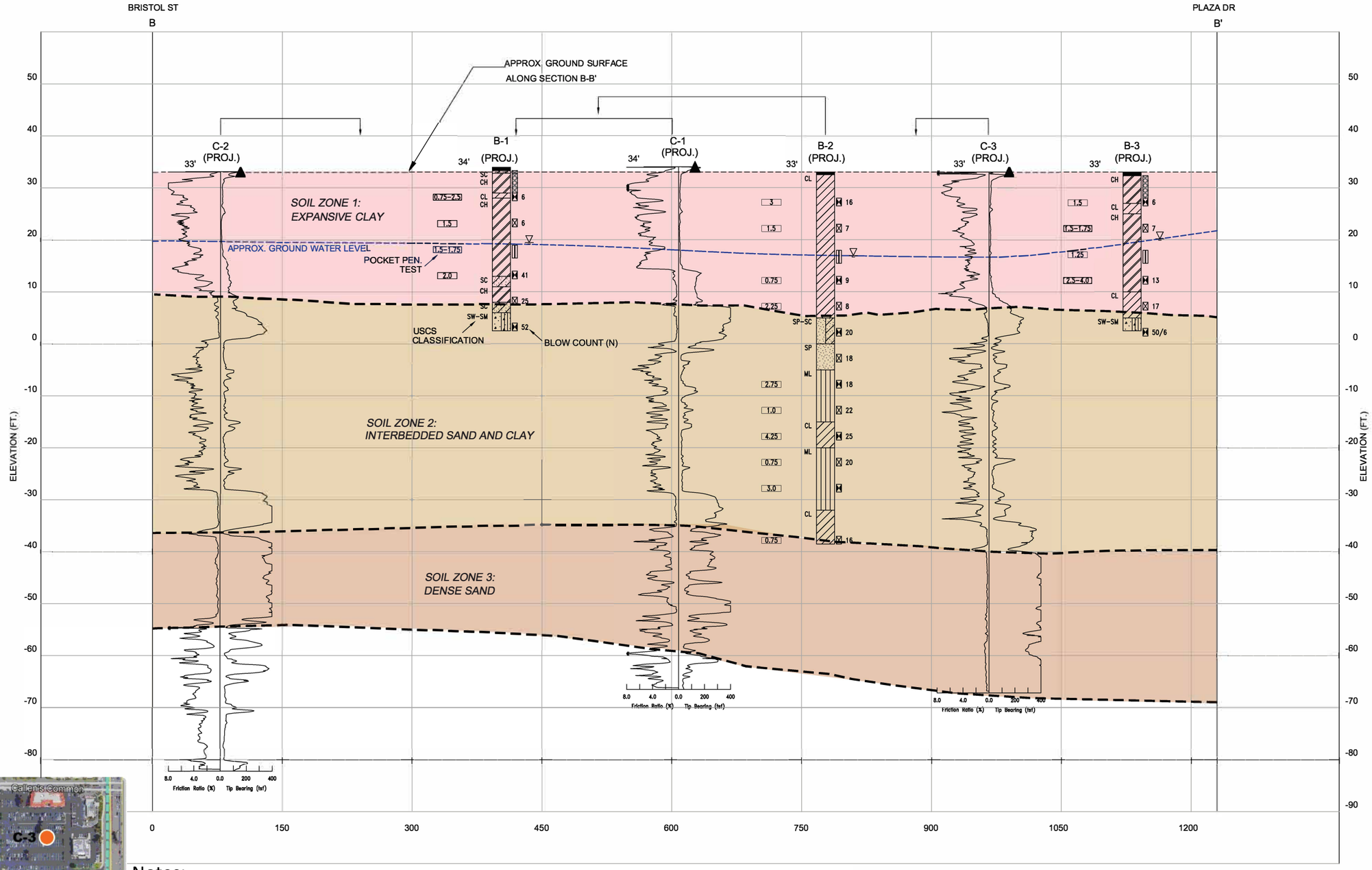

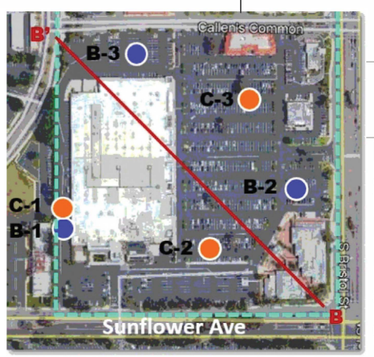

Notes:

Stratigraphic boundaries are shown here to illustrate generic soil types for use in preliminary design. Conditions encountered during construction will vary from those represented on the figure. Note CPT-1 soil zone 3 indicates interbedded very dense sands with clay layers. Additional geotechnical data collection is recommended at final design.

GROUP DELTA

GROUP DELTA CONSULTANTS, INC.
ENGINEERS AND GEOLOGISTS
32 MAUCHLY, SUITE B
IRVINE, CA 92618 (949) 450-2100

FIGURE NUMBER
5B

PROJECT NAME
BRISTOL COMMONS
SANTA ANA, CALIFORNIA

PROJECT NUMBER
IR-737

CROSS SECTION B-B'

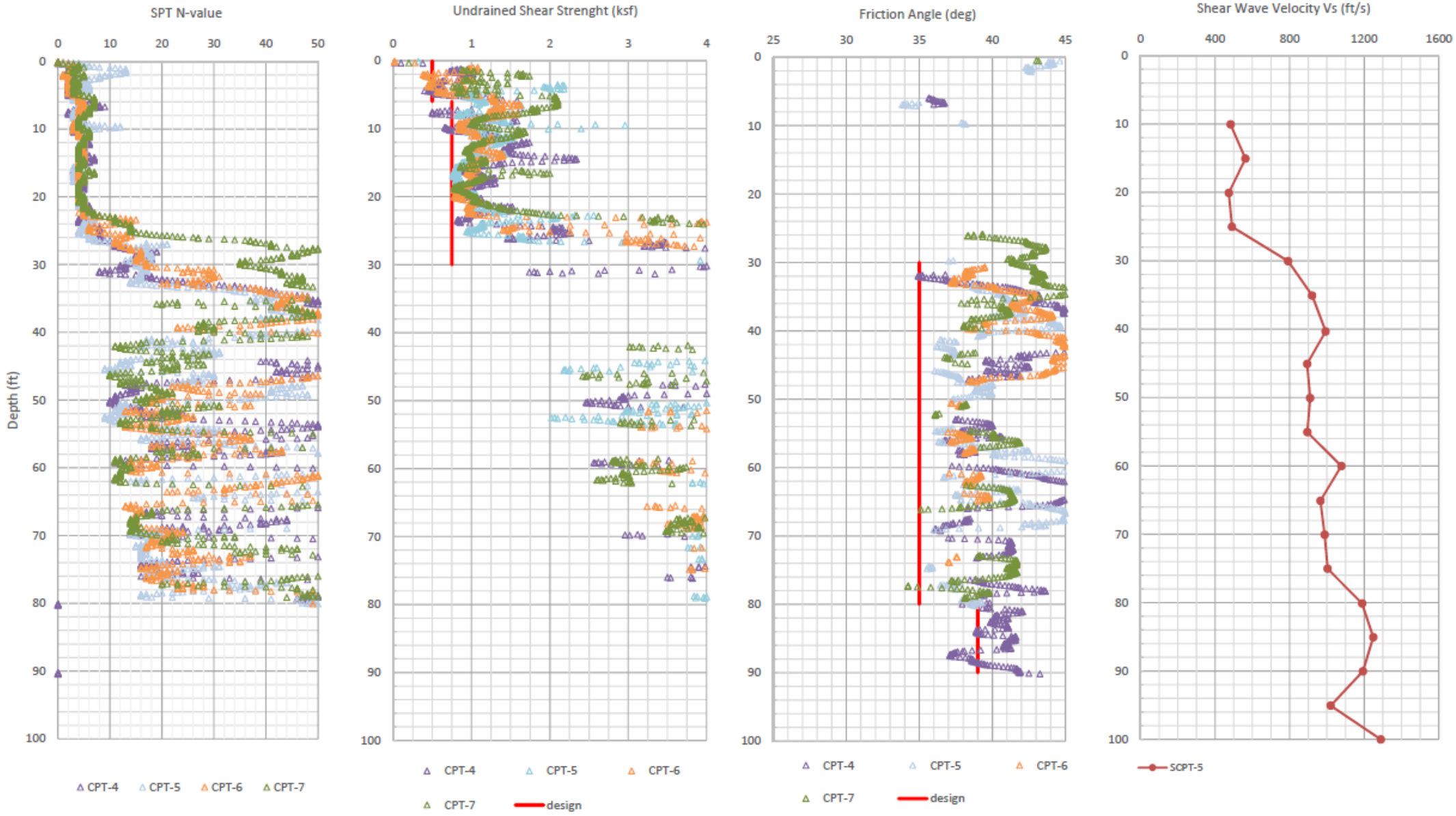

GROUP DELTA CONSULTANTS, INC. ENGINEERS AND GEOLOGISTS 32 MAUCHLY, SUITE B IRVINE, CA 92618 (949) 450-2100		FIGURE NUMBER 5C
PROJECT NAME BRISTOL COMMONS, SANTA ANA, CA		PROJECT NUMBER IR737
Subsurface Characterization A-A'		

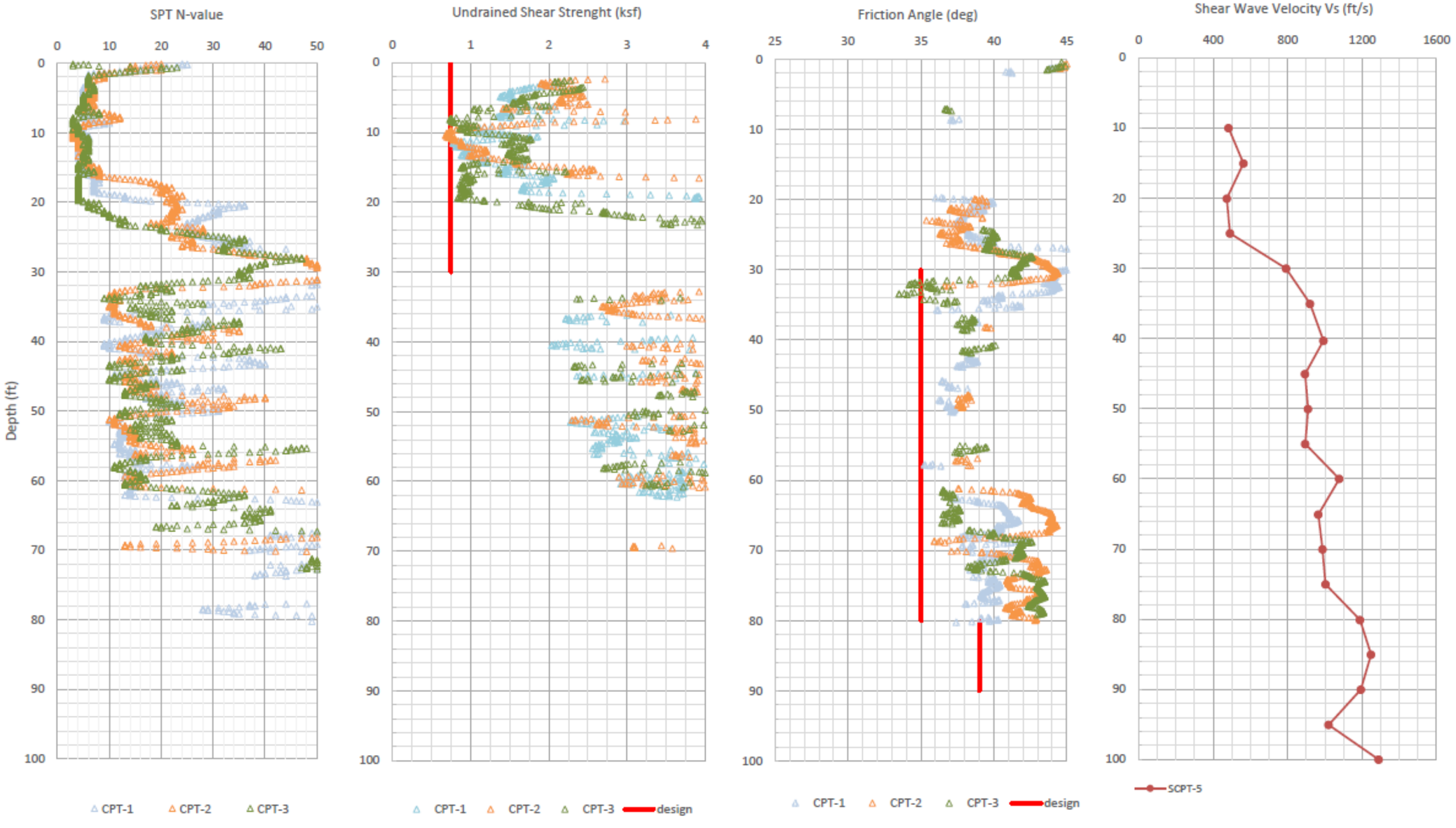

GROUP DELTA

GROUP DELTA CONSULTANTS, INC.
ENGINEERS AND GEOLOGISTS
32 MAUCHLY, SUITE B
IRVINE, CA 92618 (949) 450-2100

FIGURE NUMBER
5D

PROJECT NAME
BRISTOL COMMONS
SANTA ANA, CA

PROJECT NUMBER
IR737

Subsurface Characterization B-B'

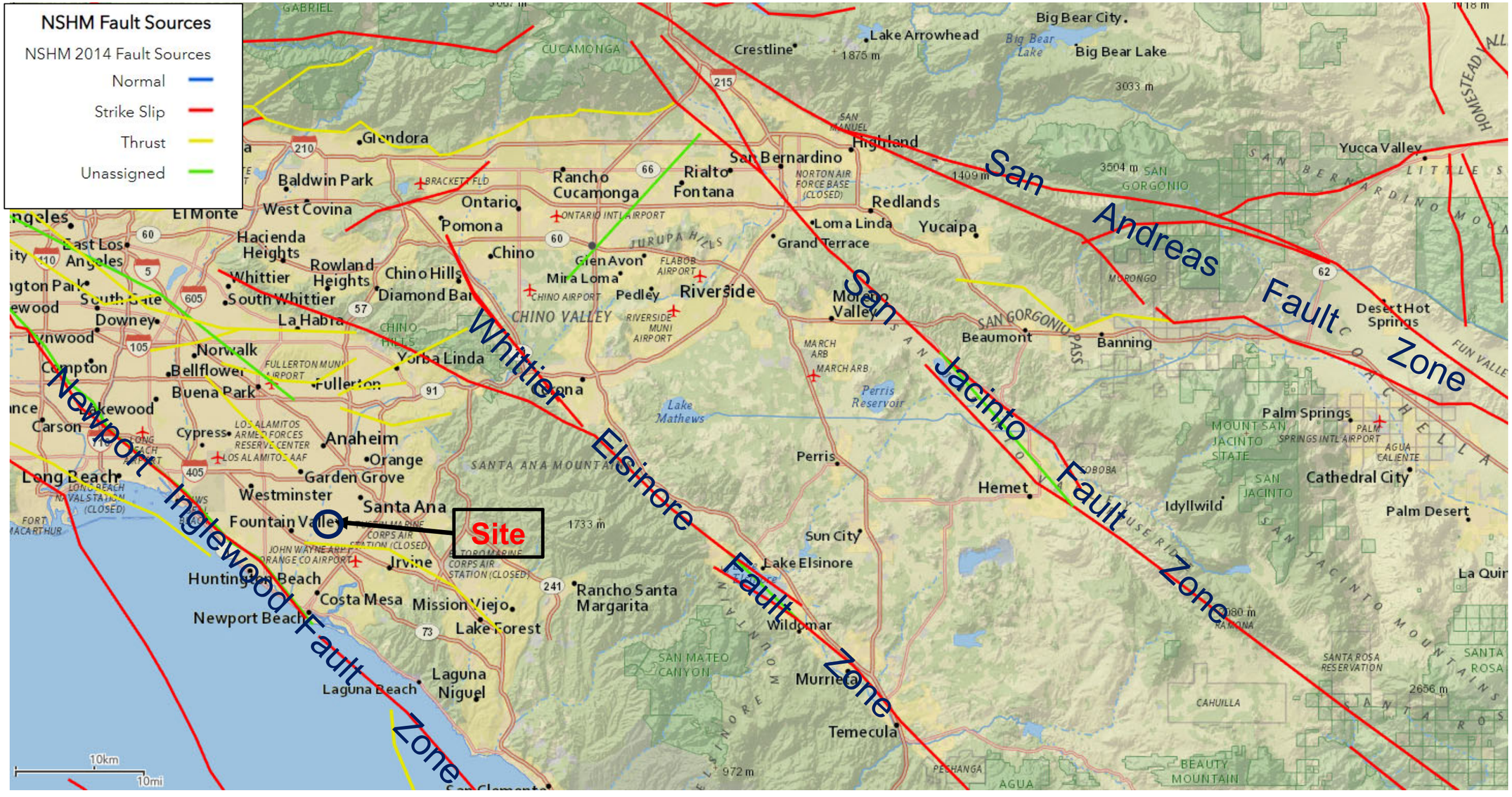

Reference: https://usgs.maps.arcgis.com/apps/webappviewer/index.html?id=5a6038b3a1684561a9b0aadf88412fcf

GROUP DELTA	**GROUP DELTA CONSULTANTS, INC.** ENGINEERS AND GEOLOGISTS 32 MAUCHLY, SUITE B IRVINE, CA 92618 (949) 450-2100	FIGURE NO.: **6**
	PROJECT NAME: Bristol Commons, Santa Ana, CA	PROJECT NO.: IR737
	FAULT AND SEISMICITY MAP	

Applicable Report Section [1]	Details Provided by DCI Engineers on 07/14/2022								Details Provivded by Group Delta
	# Stories	Building Type	Typical Uniform Load			Typical Column Load			Foundation Types
			D (psf)	L (psf)	D+L (psf)	D (kips)	L (kips)	D+L (kips)	
5.2	5	Wood Framed On-Grade	190	160	350	N/A	N/A	N/A	· Shallow foundation on 4 ft of imported non-expansive material; or · Mat or post-tensioned slab; or · Deep foundations (i.e., auger cast piles);
	6	5-Story Wood Framed + Basement (Residential + Retail at Base)	230	200	430	210	180	390	
5.3	7	5-Story Wood Framed over 1-Level PT Concrete Podium + Basement (Residential)	320	200	520	290	180	470	· Mat slab (if settlements are acceptable); or · Post-tensioned slab with ground improvement; or · Deep foundations (i..e, auger cast piles);
	8	4-Story Wood Framed over 3-Level PT Concrete Podium + Basement (Residential)	550	240	790	500	220	720	
	9	5-Story Wood Framed over 3-Level PT Concrete Podium + Basement (Residential)	590	280	870	530	250	780	
5.4.1	4	PT Concrete Residential + 2-Level Basement (Retail at Base)	420	120	540	380	110	490	· Mat slab (if settlements are acceptable); or · Post-tensioned slab with ground improvement; or · Deep foundations (i..e, auger cast piles);
	4	PT Concrete Office Building + Basement	450	150	600	410	140	550	
	6	PT Concrete Residential + 2-Level Basement (Retail at Base)	630	200	830	570	180	750	
5.4.2	8	PT Concrete Residential + Basement	860	280	1,140	770	250	1,020	· Deep foundations (i..e, auger cast piles);
	9	PT Concrete Residential + Basement	970	320	1,290	870	290	1,160	
	9	PT Concrete Residential + Basement (Retail at Base)	970	320	1,290	870	290	1,160	
	17	PT Concrete Hotel Tower + Basement	1,930	640	2,570	1,740	580	2,320	
	24	PT Concrete Residential Tower + Basement (Atria)	2,720	920	3,640	2,450	830	3,280	
5.5.1	5	PT Concrete Short-Span Parking Structure On-Grade	510	200	710	460	180	640	· Mat or post-tensioned slab with ground improvement; or · Deep foundations (i..e, auger cast piles);
5.5.2	6	PT Concrete Free-Standing Long-Span Parking Structure On-Grade	670	240	910	800	290	1,090	· Deep foundations (i..e, auger cast piles);

Note:
1. Refer to corresponding report section for details
2. Foundation mass not included in loads.
3. Slabs on grade, mat slabs and/or post-tensioned slabs should be designed for expansive forces or at least 4 feet of removal and recompaction with non-expansive (import) material will be required.

DCI ENGINEERS

GROUP DELTA

GROUP DELTA CONSULTANTS, INC.
ENGINEERS AND GEOLOGISTS
32 MAUCHLY, SUITE B
IRVINE, CA 92618 (949) 450-2100

FIGURE NO.: 7

PROJECT NAME: Bristol Commons, Santa Ana, CA

PROJECT NO.: IR737

Preliminary Structural Loading for Building Typology

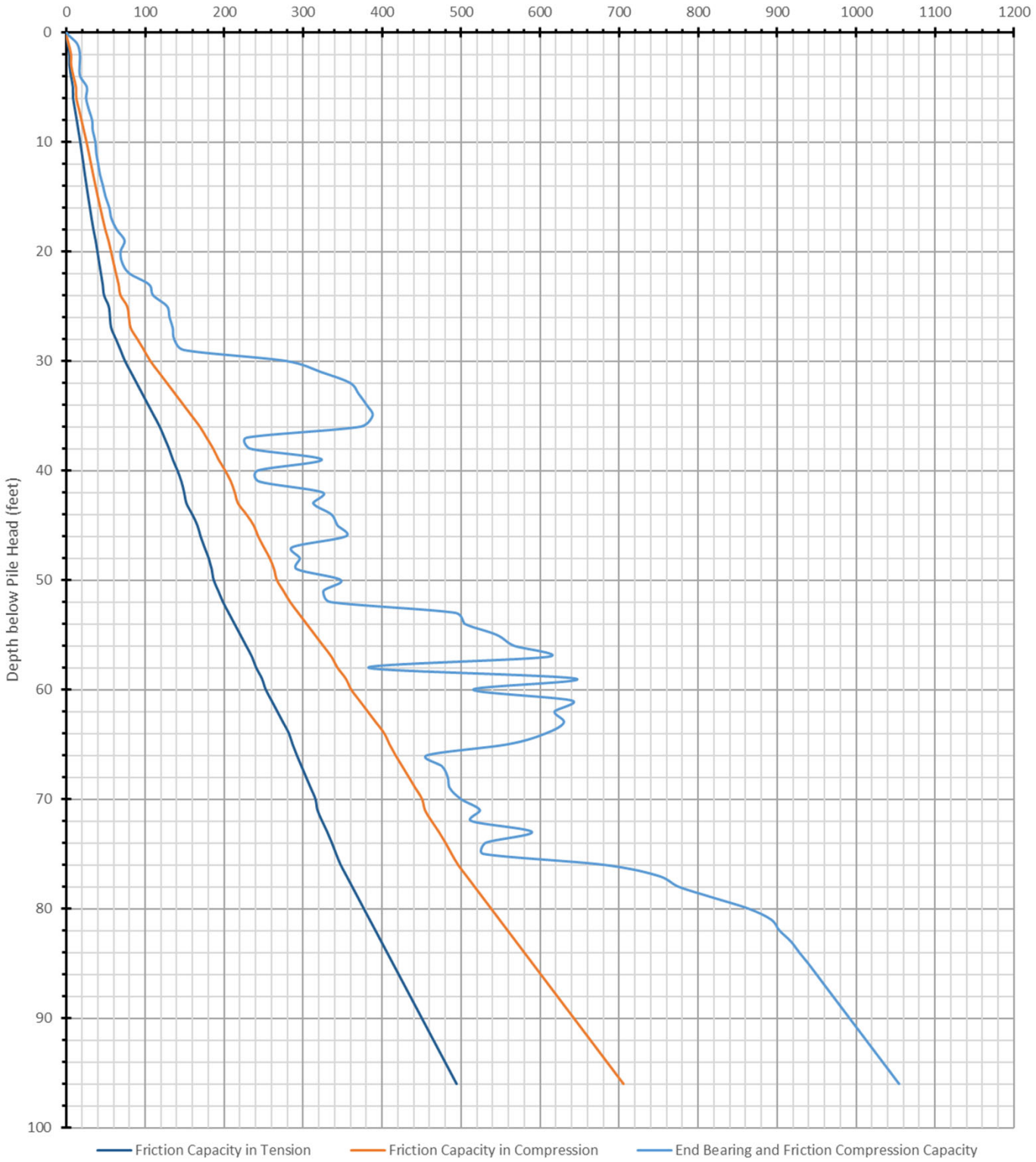

GROUP DELTA	**GROUP DELTA CONSULTANTS, INC.** ENGINEERS AND GEOLOGISTS 32 MAUCHLY, SUITE B IRVINE, CA 92618 (949) 450-2100	FIGURE NO.: **8A**
	PROPOSAL NAME: Bristol Commons, Santa Ana, CA	PROPOSAL NO.: IR737
	Preliminary Ultimate Axial Capacity **16-Inch Diameter ACD Piles**	

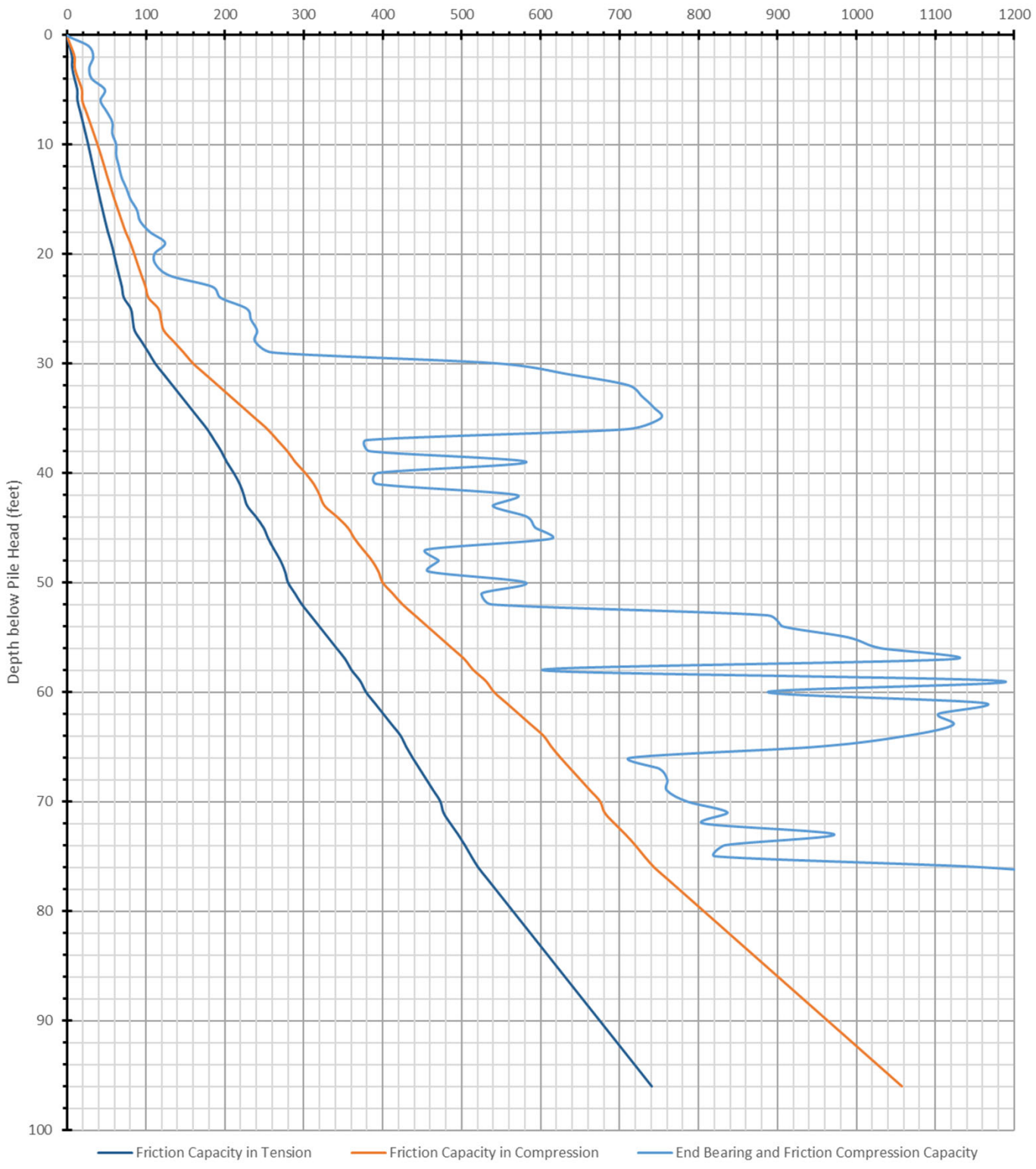

GROUP DELTA	**GROUP DELTA CONSULTANTS, INC.** ENGINEERS AND GEOLOGISTS 32 MAUCHLY, SUITE B IRVINE, CA 92618 (949) 450-2100	FIGURE NO.: **8B**
	PROPOSAL NAME: Bristol Commons, Santa Ana, CA	PROPOSAL NO.: IR737
	Preliminary Ultimate Axial Capacity **24-Inch Diameter ACD Piles**	

APPENDIX A
FIELD INVESTIGATION

APPENDIX A
FIELD INVESTIGATION

A.1 Introduction

The subsurface conditions at the Bristol Commons project site were investigated by performing five hollow stem borings, and seven Cone Penetration Tests (CPTs) in the periods on February 14, 2020, and January 4 and 5, 2021. The locations of the explorations are presented in Figure 3 of the main report.

Prior to beginning the exploration program, access permission and drilling permits were obtained as necessary from Orange County Environmental Health Agency, and the property tenants and owners. Subsurface utility maps were reviewed prior to selecting locations for subsurface investigations. Underground Service Alert (USA) was notified and each exploration location was cleared for underground utilities. Approved traffic control plans were implemented where necessary during field activities. The exploration methods are described in the following sections.

A.2 Soil Drilling and Sampling

Drilling, Logging, and Soil Classification

Borings were performed by GDC's drilling subcontractors ABC Liovin Drilling, Inc. and Martini Drilling Corporation under the continuous technical supervision of a GDC field engineer, who visually inspected the soil samples, measured groundwater levels, maintained detailed records of the borings, and visually / manually classified the soils in accordance with the ASTM D 2488 and the Unified Soil Classification System (USCS). Logging and classification were performed in general accordance with Caltrans "Soil and Rock Logging, Classification, and Presentation Manual (2010 Edition)". A Boring Record Legend and Key for Soil Classification are presented in Figures A-1A through A-1E. The boring records are presented in Figures A-2a through Figure A-10.

Sampling

Bulk samples of soil cuttings were collected at selected depths and drive samples were collected at a typical interval of 5 feet from the borings. The sampling was performed using Standard Penetration Test (SPT) samplers in accordance with ASTM D 1586, Ring-Lined "California" Split Barrel samplers in accordance with ASTM D 3550 and Thin-walled (Shelby) Tube in accordance with ASTM D 1587.

Bulk samples were collected from auger cuttings and placed in plastic bags.

SPT drive samples were obtained using a 2-inch outside diameter and 1.375-inch inside diameter split-spoon sampler without lining. The soil recovered from the SPT sampling was sealed in plastic bags to preserve the natural moisture content.

California drive samples were collected with a 3-inch outside diameter 2.5-inch inside diameter split barrel sampler with a 2.42-inch inside diameter cutting shoe. The sampler barrel is lined with 18-inches of metal rings for sample collection and has an additional length of waste barrel. Stainless steel or brass liner rings for sample collection are 1-inch high, 2.42-inch inside diameter, and 2.5-inch outside diameter. California samples were removed from the sampler, retained in the metal rings and placed in sealed plastic canisters to prevent loss of moisture.

Shelby tube samples were obtained by pressing a 3-inch outside diameter 2.87-inch inside diameter thin-walled metal tube 30 inches into the in-situ soil at the bottom of a boring. The soil-filled tube was removed and applied seals to the soil surfaces to prevent soil movement and moisture gain or loss.

At each sampling interval, the drive samplers were fitted onto sampling rod, lowered to the bottom of the boring, and driven 18 inches or to refusal (50 blows per 6 inches) with a 140-lb hammer free-falling a height of 30-inches using an automatic hammer for SPT and California drive samples, and pushed 30 inches or to refusal with the drilling rig for Shelby tube samples.

A relatively intact sample is obtained by Shelby tube. Compared to the SPT, the California sampler provides less disturbed samples.

Penetration Resistance

SPT blow counts adjusted to 60% hammer efficiency (N_{60}) are routinely used as an index of the relative density of coarse grained soils, and are sometimes used (but less reliable) to estimate consistency of cohesive soils. For samples collected using non-SPT samplers, different hammer weight and drop height, and/or efficiency different than 60%, correction factors can be applied to estimate the equivalent SPT N_{60} value following the approach of Burmister (1948) as follows:

$$N^*_{60} = N_R * C_E * C_H * C_S$$

where

N^*_{60} = equivalent SPT N_{60}

N_R = Raw Field Blowcount (blows per foot)

C_E = Hammer Efficiency Correction = Er_i / 60%

C_H = Hammer Energy Correction = (W * H) / (140 lb * 30 in)

C_S = Sampler Size Correction = $[(2.0\text{ in})^2-(1.375\text{ in})^2]/[D_o^2-D_i^2]$

Er_i = hammer efficiency, %

W= actual drive hammer weight, lbs

H = actual drive hammer drop, inch

D_o, D_i = actual sampler outside and inside diameter, respectively, inches

Burmister's correction assumes that penetration resistance (blowcount) is inversely proportional to the hammer energy. For a hammer other than a 140# hammer with 30" drop the hammer energy correction is equal to the ratio of the theoretical hammer energy (weight times drop) to the theoretical SPT hammer energy, or C_H = (W * H) / (140 lb * 30 in).

Burmister's correction assumes that penetration resistance (blowcount) is proportional to the annular end area of the drive sampler. For California drive samplers with D_o=3 inch and D_i=2.42 inch the sampler size correction factor is the ratio of the annular area of an SPT split spoon to that of the California Sampler, or $C_S = [2.0^2-1.375^2]/[3^2-2.42^2] = 0.67$.

To normalize the field SPT and California blowcounts to a hammer with 60% efficiency, an energy correction factor equal to Hammer Efficiency (%) / 60% was applied to the field blowcounts. Hammer efficiency was determined by Pile Driving Analyzer (PDA) measurement. Hammer efficiency measurements are presented in this Appendix.

The correction factors applied to obtain N^*_{60} are summarized in the following table:

Hammer Type	Hammer Weight and Drop	C_H	Hammer Efficiency (%)	C_E	Cal Sampler Dimensions	C_S	Combined Correction Factor SPT Samples	Combined Correction Factor CAL Samples
CME 85 ABC Drilling	140# 30"	1	62.6	1.04	D_o=3.0" D_i=2.42"	0.67	1.04	0.70
CME 75 Martini Drilling	140# 30"	1	79.3	1.32	D_o=3.0" D_i=2.42"	0.67	1.32	0.89

Corrected N^*_{60} are generally used, with due engineering judgment, only for qualitative assessment of in place density or consistency, and are not used for other more critical analyses such as liquefaction.

Relative Density and Consistency

Equivalent SPT N_{60} values were used as the basis for classifying relative density of granular/cohesionless soils. Wherever possible consistency classification of cohesive soils was

based on undrained shear strength estimated in the field with a pocket penetrometer or by testing in the laboratory. Where pocket penetrometer or other tests could not be performed, consistency of cohesive soils was estimated by correlations to Equivalent SPT N_{60}. The correlations for consistency and relative density are shown in the Boring Record Legend, Figures A-1A through A-1C. Drive sample field blow counts, SPT N^*_{60} values, pocket penetrometer readings, and corresponding density/consistency classifications are presented on the boring records.

Borehole Abandonment

At the completion of the drilling groundwater was measured (where possible) and the borings were abandoned by backfilling the borehole with Bentonite grout or by transferring the borehole into a temporary well, as indicated on the records. Excess cuttings and drilling fluids were placed in 55 gallon drums, sampled and tested for contaminants, temporarily stored at an approved location, and legally disposed of off-site. The surface was patched with cold mix asphalt concrete or quickset concrete, as necessary. Notes describing the borehole abandonment are presented at the bottom of each boring record.

Sample Handling and Transport

Geotechnical samples were sealed to prevent moisture loss, packed in appropriate protective containers, and transported to the geotechnical laboratory for further examination and geotechnical testing.

Laboratory Testing

The soils were further examined and tested in the laboratory and classified in accordance with the Unified Soil Classification System following ASTM D 2487 and D 2488 (see Figures A-1D and A-1E). Field classifications presented on the records were modified where necessary on the basis of the laboratory test results. Descriptions of the laboratory tests performed and a summary of the results are presented in Appendix B.

A.3 Cone Penetration Tests

CPT Soundings

Kehoe Engineering & Testing performed the CPT soundings as a subcontractor to GDC. The CPTs were conducted in accordance with ASTM D 5778 using an electronic piezocone penetrometer. The test consists of hydraulically pushing a conical pointed penetrometer with a cylindrical friction sleeve and a piezo-element located behind the conical point into subsurface soils at a slow, steady rate. Parameters electronically measured and recorded nearly continuously during the CPT are soil bearing resistance at the cone tip (q_c), soil frictional

resistance along the cylindrical friction sleeve (fs), and pore water pressure directly behind the cone tip (U). These measured values are then used to estimate the type and engineering properties of soils being penetrated using published correlations between q_c, fs, and U.

The CPT data in graphical form and accompanying data interpretation by GDC are presented in this Appendix. At the completion of the sounding the apparent groundwater depth and cave-in depth was measured with weighted tape and the CPT hole was abandoned by backfilling bentonite into the hole. Paved surfaces were patched with cold mix asphalt or quickset concrete, as necessary.

Seismic CPT Shear Wave Velocity Measurement

Shear wave velocity measurements versus depth were made in selected CPTs. After each 5 ft of penetration the probe was stopped, a shear wave was generated at the ground surface, and the arrival of the shear wave was detected by the CPT probe. The arrival times of the shear waves were used to calculate the shear wave velocity versus depth. The shear wave velocity data are presented in this Appendix.

SOIL IDENTIFICATION AND DESCRIPTION SEQUENCE

Sequence		Refer to Section		Required	Optional
		Field	Lab		
1	Group Name	2.5.2	3.2.2	●	
2	Group Symbol	2.5.2	3.2.2	●	
	Description Components				
3	Consistency of Cohesive Soil	2.5.3	3.2.3	●	
4	Apparent Density of Cohesionless Soil	2.5.4		●	
5	Color	2.5.5		●	
6	Moisture	2.5.6		●	
7	Percent or Proportion of Soil	2.5.7	3.2.4	●	◍
	Particle Size	2.5.8	2.5.8	●	◍
	Particle Angularity	2.5.9			○
	Particle Shape	2.5.10			○
8	Plasticity (for fine-grained soil)	2.5.11	3.2.5		○
9	Dry Strength (for fine-grained soil)	2.5.12			○
10	Dilatency (for fine-grained soil)	2.5.13			○
11	Toughness (for fine-grained soil)	2.5.14			○
12	Structure	2.5.15			○
13	Cementation	2.5.16		●	
14	Percent of Cobbles and Boulders	2.5.17		●	
	Description of Cobbles and Boulders	2.5.18		●	
15	Consistency Field Test Result	2.5.3		●	
16	Additional Comments	2.5.19			○

Describe the soil using descriptive terms in the order shown

Minimum Required Sequence:

USCS Group Name (Group Symbol); Consistency or Density; Color; Moisture; Percent or Proportion of Soil; Particle Size; Plasticity (optional).

◍ = optional for non-Caltrans projects

Where applicable:

Cementation; % cobbles & boulders;
Description of cobbles & boulders;
Consistency field test result

Ref.: Caltrans Soil and Rock Logging Classification, and Presentation Manual (2010)

HOLE IDENTIFICATION

Holes are identified using the following convention:

H-YY-NNN

Where:
H: Hole Type Code
YY: 2-digit year
NNN: 3-digit number (001-999)

Hole Type Code	Description
A	Auger boring (hollow or solid stem, bucket)
R	Rotary drilled boring (conventional)
RC	Rotary core (self-cased wire-line, continuously-sampled)
RW	Rotary core (self-cased wire-line, not continuously sampled)
P	Rotary percussion boring (Air)
HD	Hand driven (1-inch soil tube)
HA	Hand auger
D	Driven (dynamic cone penetrometer)
CPT	Cone Penetration Test
O	Other (note on LOTB)

Description Sequence Examples:

SANDY lean CLAY (CL); very stiff; yellowish brown; moist; mostly fines; some SAND, from fine to medium; few gravels; medium plasticity; PP=2.75.

Well-graded SAND with SILT and GRAVEL and COBBLES (SW-SM); dense; brown; moist; mostly SAND, from fine to coarse; some fine GRAVEL; few fines; weak cementation; 10% GRANITE COBBLES; 3 to 6 inches; hard; subrounded.

Clayey SAND (SC); medium dense, light brown; wet; mostly fine sand,; little fines; low plasticity.

GROUP DELTA

GROUP DELTA CONSULTANTS, INC.
GEOTECHNICAL ENGINEERS AND GEOLOGISTS

FIGURE NUMBER
A-1A

PROJECT NAME
BRISTOL COMMONS PROJECT
SANTA ANA, CA

PROJECT NUMBER
IR-737

BORING RECORD LEGEND #1

GROUP SYMBOLS AND NAMES

Graphic / Symbol	Group Names
GW	Well-graded GRAVEL Well-graded GRAVEL with SAND
GP	Poorly graded GRAVEL Poorly graded GRAVEL with SAND
GW-GM	Well-graded GRAVEL with SILT Well-graded GRAVEL with SILT and SAND
GW-GC	Well-graded GRAVEL with CLAY (or SILTY CLAY) Well-graded GRAVEL with CLAY and SAND (or SILTY CLAY and SAND)
GP-GM	Poorly graded GRAVEL with SILT Poorly graded GRAVEL with SILT and SAND
GP-GC	Poorly graded GRAVEL with CLAY (or SILTY CLAY) Poorly graded GRAVEL with CLAY and SAND (or SILTY CLAY and SAND)
GM	SILTY GRAVEL SILTY GRAVEL with SAND
GC	CLAYEY GRAVEL CLAYEY GRAVEL with SAND
GC-GM	SILTY, CLAYEY GRAVEL SILTY, CLAYEY GRAVEL with SAND
SW	Well-graded SAND Well-graded SAND with GRAVEL
SP	Poorly graded SAND Poorly graded SAND with GRAVEL
SW-SM	Well-graded SAND with SILT Well-graded SAND with SILT and GRAVEL
SW-SC	Well-graded SAND with CLAY (or SILTY CLAY) Well-graded SAND with CLAY and GRAVEL (or SILTY CLAY and GRAVEL)
SP-SM	Poorly graded SAND with SILT Poorly graded SAND with SILT and GRAVEL
SP-SC	Poorly graded SAND with CLAY (or SILTY CLAY) Poorly graded SAND with CLAY and GRAVEL (or SILTY CLAY and GRAVEL)
SM	SILTY SAND SILTY SAND with GRAVEL
SC	CLAYEY SAND CLAYEY SAND with GRAVEL
SC-SM	SILTY, CLAYEY SAND SILTY, CLAYEY SAND with GRAVEL
PT	PEAT
	COBBLES COBBLES and BOULDERS BOULDERS

Graphic / Symbol	Group Names
CL	Lean CLAY Lean CLAY with SAND Lean CLAY with GRAVEL SANDY lean CLAY SANDY lean CLAY with GRAVEL GRAVELLY lean CLAY GRAVELLY lean CLAY with SAND
CL-ML	SILTY CLAY SILTY CLAY with SAND SILTY CLAY with GRAVEL SANDY SILTY CLAY SANDY SILTY CLAY with GRAVEL GRAVELLY SILTY CLAY GRAVELLY SILTY CLAY with SAND
ML	SILT SILT with SAND SILT with GRAVEL SANDY SILT SANDY SILT with GRAVEL GRAVELLY SILT GRAVELLY SILT with SAND
OL	ORGANIC lean CLAY ORGANIC lean CLAY with SAND ORGANIC lean CLAY with GRAVEL SANDY ORGANIC lean CLAY SANDY ORGANIC lean CLAY with GRAVEL GRAVELLY ORGANIC lean CLAY GRAVELLY ORGANIC lean CLAY with SAND
OL	ORGANIC SILT ORGANIC SILT with SAND ORGANIC SILT with GRAVEL SANDY ORGANIC SILT SANDY ORGANIC SILT with GRAVEL GRAVELLY ORGANIC SILT GRAVELLY ORGANIC SILT with SAND
CH	Fat CLAY Fat CLAY with SAND Fat CLAY with GRAVEL SANDY fat CLAY SANDY fat CLAY with GRAVEL GRAVELLY fat CLAY GRAVELLY fat CLAY with SAND
MH	Elastic SILT Elastic SILT with SAND Elastic SILT with GRAVEL SANDY elastic SILT SANDY elastic SILT with GRAVEL GRAVELLY elastic SILT GRAVELLY elastic SILT with SAND
OH	ORGANIC fat CLAY ORGANIC fat CLAY with SAND ORGANIC fat CLAY with GRAVEL SANDY ORGANIC fat CLAY SANDY ORGANIC fat CLAY with GRAVEL GRAVELLY ORGANIC fat CLAY GRAVELLY ORGANIC fat CLAY with SAND
OH	ORGANIC elastic SILT ORGANIC elastic SILT with SAND ORGANIC elastic SILT with GRAVEL SANDY elastic ELASTIC SILT SANDY ORGANIC elastic SILT with GRAVEL GRAVELLY ORGANIC elastic SILT GRAVELLY ORGANIC elastic SILT with SAND
OL/OH	ORGANIC SOIL ORGANIC SOIL with SAND ORGANIC SOIL with GRAVEL SANDY ORGANIC SOIL SANDY ORGANIC SOIL with GRAVEL GRAVELLY ORGANIC SOIL GRAVELLY ORGANIC SOIL with SAND

FIELD AND LABORATORY TESTS

C	Consolidation (ASTM D 2435-04)
CL	Collapse Potential (ASTM D 5333-03)
CP	Compaction Curve (CTM 216 - 06)
CR	Corrosion, Sulfates, Chlorides (CTM 643 - 99; CTM 417 - 06; CTM 422 - 06)
CU	Consolidated Undrained Triaxial (ASTM D 4767-02)
DS	Direct Shear (ASTM D 3080-04)
EI	Expansion Index (ASTM D 4829-03)
M	Moisture Content (ASTM D 2216-05)
OC	Organic Content (ASTM D 2974-07)
P	Permeability (CTM 220 - 05)
PA	Particle Size Analysis (ASTM D 422-63 [2002])
PI	Liquid Limit, Plastic Limit, Plasticity Index (AASHTO T 89-02, AASHTO T 90-00)
PL	Point Load Index (ASTM D 5731-05)
PM	Pressure Meter
PP	Pocket Penetrometer
R	R-Value (CTM 301 - 00)
SE	Sand Equivalent (CTM 217 - 99)
SG	Specific Gravity (AASHTO T 100-06)
SL	Shrinkage Limit (ASTM D 427-04)
SW	Swell Potential (ASTM D 4546-03)
TV	Pocket Torvane
UC	Unconfined Compression - Soil (ASTM D 2166-06) Unconfined Compression - Rock (ASTM D 2938-95)
UU	Unconsolidated Undrained Triaxial (ASTM D 2850-03)
UW	Unit Weight (ASTM D 4767-04)
VS	Vane Shear (AASHTO T 223-96 [2004])

SAMPLER GRAPHIC SYMBOLS

- Standard Penetration Test (SPT)
- Standard California Sampler
- Modified California Sampler
- Shelby Tube
- Piston Sampler
- NX Rock Core
- HQ Rock Core
- Bulk Sample
- Other (see remarks)

DRILLING METHOD SYMBOLS

- Auger Drilling
- Rotary Drilling
- Dynamic Cone or Hand Driven
- Diamond Core

WATER LEVEL SYMBOLS

- First Water Level Reading (during drilling)
- Static Water Level Reading (after drilling, date)

DEFINITIONS FOR CHANGE IN MATERIAL

Term	Definition	Symbol
Material Change	Change in material is observed in the sample or core, and the location of change can be accurately measured.	———
Estimated Material Change	Change in material cannot be accurately located because either the change is gradational or because of limitations in the drilling/sampling methods used.	- - - - - - - -
Soil/Rock Boundary	Material changes from soil characteristics to rock characteristics.	~~~~~

Ref.: Caltrans Soil and Rock Logging Classification, and Presentation Manual (2010)

GROUP DELTA

GROUP DELTA CONSULTANTS, INC.
GEOTECHNICAL ENGINEERS AND GEOLOGISTS

FIGURE NUMBER
A-1B

PROJECT NAME
BRISTOL COMMONS PROJECT
SANTA ANA, CA

PROJECT NUMBER
IR-737

BORING RECORD LEGEND #2

CONSISTENCY OF COHESIVE SOILS

Descriptor	Shear Strength (tsf)	Pocket Penetrometer, PP Measurement (tsf)	Torvane, TV. Measurement (tsf)	Vane Shear, VS. Measurement (tsf)
Very Soft	< 0.12	< 0.25	< 0.12	< 0.12
Soft	0.12 - 0.25	0.25 - 0.50	0.12 - 0.25	0.12 - 0.25
Medium Stiff	0.25 - 0.50	0.50 - 1.0	0.25 - 0.50	0.25 - 0.50
Stiff	0.50 - 1.0	1.0 - 2.0	0.50 - 1.0	0.50 - 1.0
Very Stiff	1.0 - 2.0	2.0 - 4.0	1.0 - 2.0	1.0 - 2.0
Hard	> 2.0	> 4.0	> 2.0	> 2.0

APPARENT DENSITY OF COHESIONLESS SOILS

Descriptor	SPT N_{60} - Value (blows / foot)
Very Loose	0 - 5
Loose	5 - 10
Medium Dense	10 - 30
Dense	30 - 50
Very Dense	> 50

MOISTURE

Descriptor	Criteria
Dry	No discernable moisture
Moist	Moisture present, but no free water
Wet	Visible free water

PERCENT OR PROPORTION OF SOILS

Descriptor	Criteria
Trace	Particles are present but estimated to be less than 5%
Few	5 to 10%
Little	15 to 25%
Some	30 to 45%
Mostly	50 to 100%

PARTICLE SIZE

Descriptor		Size (in)
Boulder		> 12
Cobble		3 - 12
Gravel	Coarse	3/4 - 3
	Fine	1/5 - 3/4
Sand	Coarse	1/16 - 1/5
	Medium	1/64 - 1/16
	Fine	1/300 - 1/64
Silt and Clay		< 1/300

PLASTICITY OF FINE-GRAINED SOILS

Descriptor	Criteria
Nonplastic	A 1/8-inch thread cannot be rolled at any water content.
Low	The thread can barely be rolled, and the lump cannot be formed when drier than the plastic limit.
Medium	The thread is easy to roll, and not much time is required to reach the plastic limit; it cannot be rerolled after reaching the plastic limit. The lump crumbles when drier than the plastic limit.
High	It takes considerable time rolling and kneading to reach the plastic limit. The thread can be rerolled several times after reaching the plastic limit. The lump can be formed without crumbling when drier than the plastic limit.

CONSISTENCY OF COHESIVE SOILS VS. N_{60}

Description	SPT N_{60} (blows / foot)
Very Soft	0 - 2
Soft	2 - 4
Medium Stiff	4 - 8
Stiff	8 - 15
Very Stiff	15 - 30
Hard	> 30

Ref: Peck, Hansen, and Thornburn, 1974, "Foundation Engineering", Second Edition

Note: Only to be used (with caution) when pocket penetrometer or other data on undrained shear strength are unavailable. Not allowed by Caltrans Soil and Rock Logging and Classificaton Manual, 2010

CEMENTATION

Descriptor	Criteria
Weak	Crumbles or breaks with handling or little finger pressure.
Moderate	Crumbles or breaks with considerable finger pressure.
Strong	Will not crumble or break with finger pressure.

Ref.: Caltrans Soil and Rock Logging Classification, and Presentation Manual (2010), with the exception of consistency of cohesive soils vs. N_{60}.

GROUP DELTA

GROUP DELTA CONSULTANTS, INC.
GEOTECHNICAL ENGINEERS AND GEOLOGISTS

FIGURE NUMBER
A-1C

PROJECT NAME
BRISTOL COMMONS PROJECT
SANTA ANA, CA

PROJECT NUMBER
IR-737

BORING RECORD LEGEND #3

CLASSIFICATION OF INORGANIC FINE GRAINED SOILS (Soils with ≥50% finer than No. 200 Sieve)

GROUP SYMBOL				GROUP NAME
CL	<30% plus No. 200	<15% plus No. 200		Lean clay
		15-25% plus No. 200	%sand ≥%gravel	Lean clay with sand
			%sand <%gravel	Lean clay with gravel
	≥30% plus No. 200	% sand ≥ % gravel	<15% gravel	Sandy lean clay
			≥15% gravel	Sandy lean clay with gravel
		% sand < % gravel	<15% sand	Gravelly lean clay
			≥15% sand	Gravelly lean clay with sand
ML	<30% plus No. 200	<15% plus No. 200		Silt
		15-25% plus No. 200	%sand ≥%gravel	Silt with sand
			%sand <%gravel	Silt with gravel
	≥30% plus No. 200	% sand ≥ % gravel	<15% gravel	Sandy silt
			≥15% gravel	Sandy silt with gravel
		% sand < % gravel	<15% sand	Gravelly silt
			≥15% sand	Gravelly silt with sand
CH	<30% plus No. 200	<15% plus No. 200		Fat clay
		15-25% plus No. 200	%sand ≥%gravel	Fat clay with sand
			%sand <%gravel	Fat clay with gravel
	≥30% plus No. 200	% sand ≥ % gravel	<15% gravel	Sandy fat clay
			≥15% gravel	Sandy fat clay with gravel
		% sand < % gravel	<15% sand	Gravelly fat clay
			≥15% sand	Gravelly fat clay with sand
MH	<30% plus No. 200	<15% plus No. 200		Elastic silt
		15-25% plus No. 200	%sand ≥%gravel	Elastic silt with sand
			%sand <%gravel	Elastic silt with gravel
	≥30% plus No. 200	% sand ≥ % gravel	<15% gravel	Sandy elastic silt
			≥15% gravel	Sandy elastic silt with gravel
		% sand < % gravel	<15% sand	Gravelly elastic silt
			≥15% sand	Gravelly elastic silt with sand

Reference:
ASTM D 2487 and 2488

Laboratory Classification of Clay and Silt

REFERENCE: Caltrans Soil and Rock Logging, Classification, and Presentation Manual (2010).

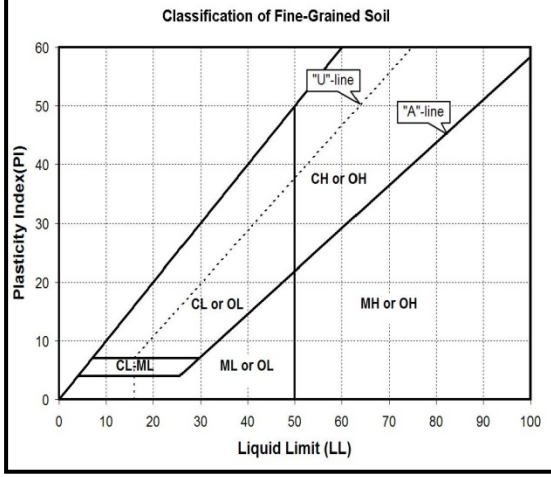

CL: LL<50; above A-Line.

CH: LL≥50; above A-Line.

ML: LL<50; below A-Line, or PI<4, or Non-Plastic

MH: LL≥50; below A-Line.

CL-ML: above A-Line and PI=4 to 7

CL/CH, ML/MH: at or near LL=50

ML/CL, MH/CH: at or near the A-Line

Field Identification of Clays and Silts

Group Symbol	Dry Strength	Dilatancy	Toughness	Plasticity
ML	None to low	Slow to rapid	Low or thread cannot be formed	Low to nonplastic
CL	Medium to high	None to slow	Medium	Medium
MH	Low to medium	None to slow	Low to medium	Low to medium
CH	High to very high	None	High	High

GROUP DELTA

Group Delta Project No. IR-737

BRISTOL COMMONS PROJECT
SANTA ANA, CA

KEY FOR SOIL CLASSIFICATION #1

Figure A-1D

CLASSIFICATION OF COARSE-GRAINED SOILS (Soils with <50% "fines" passing No. 200 Sieve)

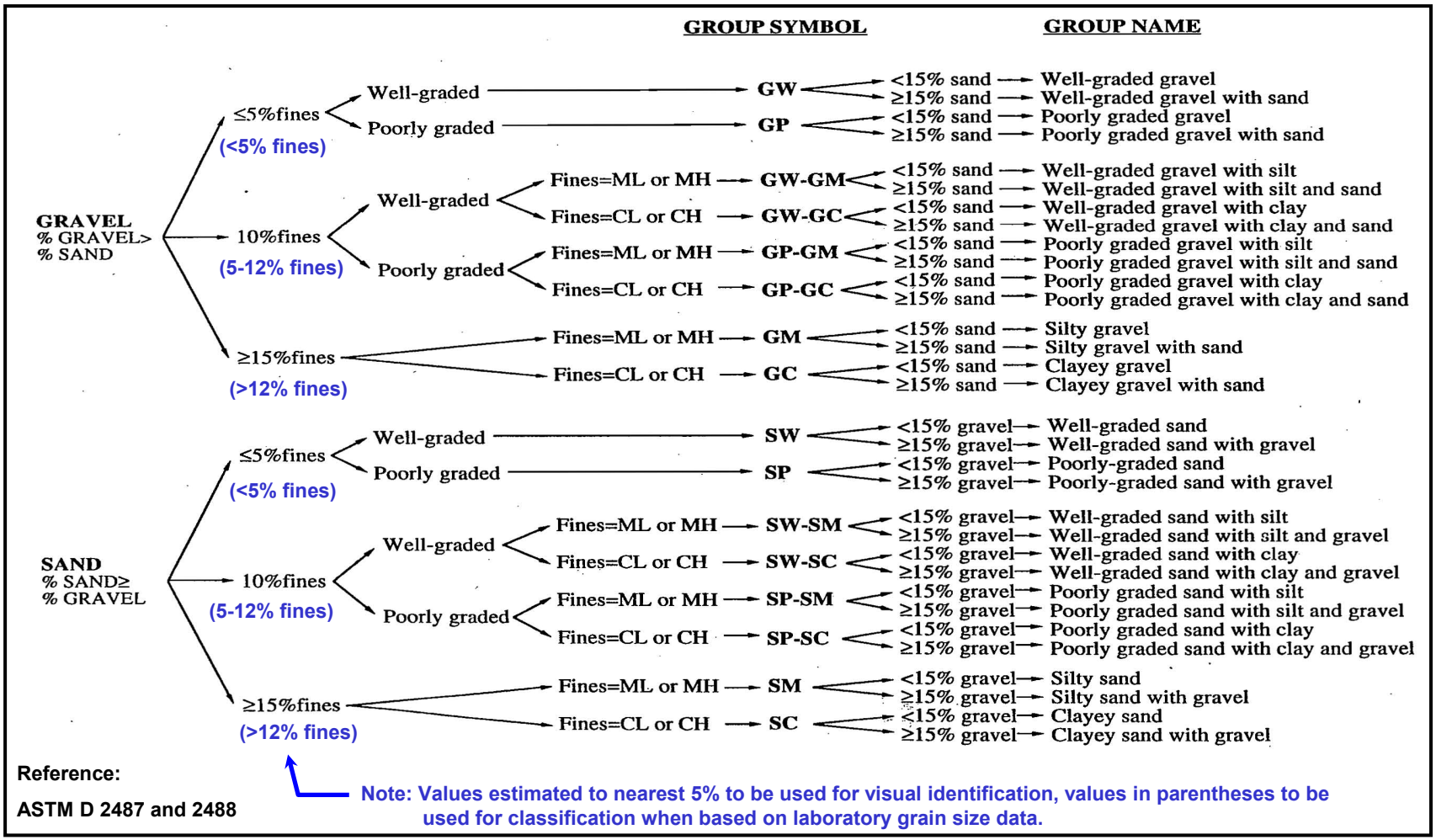

Reference:

ASTM D 2487 and 2488

Note: Values estimated to nearest 5% to be used for visual identification, values in parentheses to be used for classification when based on laboratory grain size data.

Granular Soil Gradation Parameters

Coefficient of Uniformity: $C_u = D_{60}/D_{10}$

Coefficient of Curvature: $Cc = D_{30}^2 / (D_{60} \times D_{10})$

D_{10} = 10% of soil is finer than this diameter

D_{30} = 30% of soil is finer than this diameter

D_{60} = 60% of soil is finer than this diameter

Group Symbol	Gradation or Plasticity Requirement
SW	$C_u > 6$ and $1 \leq C_c \leq 3$
GW	$C_u > 4$ and $1 \leq C_c \leq 3$
GP or SP	Clean gravel or sand not meeting requirement for SW or GW
SM or GM	Non-plastic fines or below A-Line or PI<4
SC or GC	Plastic fines or above A-Line and PI>7

GROUP DELTA

Group Delta Project No. IR-737

BRISTOL COMMONS PROJECT
SANTA ANA, CA

KEY FOR SOIL CLASSIFICATION #2

Figure A-1E

BORING RECORD

PROJECT NAME	PROJECT NUMBER	HOLE ID
Bristol Commons Project	IR737	**B-1**

SITE LOCATION	START	FINISH	SHEET NO.
Santa Ana, CA	1/5/2021	1/5/2021	1 of 2

DRILLING COMPANY	DRILL RIG	DRILLING METHOD	LOGGED BY	CHECKED BY
ABC Liovin	CME 85	Hollow Stem Auger	Y. Wang	

HAMMER TYPE (WEIGHT/DROP)	HAMMER EFFICIENCY (ERi)	BORING DIA. (in)	TOTAL DEPTH (ft)	GROUND ELEV (ft)	DEPTH/*ELEV.* GW (ft)
Hammer: 140 lbs., Drop: 30 in.	62.6%	8	31.5	34	▽ 14.5 / *19.5* DURING DRILLING

DRIVE SAMPLER TYPE(S) & SIZE (ID)	NOTES	
SPT (1.4"), CAL (2.4")	$N_{60} = 1.04N_{SPT} = 0.70N_{MC}$	AFTER DRILLING ▼ NM / *NE*

DEPTH (feet)	ELEVATION (feet)	SAMPLE TYPE	SAMPLE NO.	PENETRATION RESISTANCE (BLOWS / 6 IN)	BLOW/FT "N"	SPT N^*_{60}	RECOVERY (%)	RQD (%)	MOISTURE (%)	DRY DENSITY (pcf)	ATTERBERG LIMITS (LL:PI)	OTHER TESTS	DRILLING METHOD	GRAPHIC LOG	DESCRIPTION AND CLASSIFICATION
															PAVEMENT: ASPHALT CONCRETE (2") over AGGREGATE BASE (6").
			B-1												CLAYEY SAND (SC); dark olive brown; moist; mostly fine to medium SAND; little fines; trace fine subangular GRAVEL; nonplastic.
															Fat CLAY (CH); dark grey; moist; trace fine SAND; high plasticity.
			B-2									EI			
	30														
5															
			R-3	3 4 4	8	6			8	103					SANDY Lean CLAY (CL); medium stiff; dark olive brown; moist; some fine to medium SAND; medium plasticity. PP=0.75 tsf
															Fat CLAY (CH); very stiff; dark grey; moist; trace fine to medium SAND; high plasticity. PP=2.5 tsf
	25														
10															
			S-4	3 3 3	6	6									Stiff; olive brown; trace fine SAND. PP=1.5 tsf
	20														
15															▽
			SH-5								46:31	CON			Sandy CLAY (CL): Stiff, brown, moist, mostly fines, little fine grained SAND, medium plasticity. PP=1.5 to 1.75 tsf
	15														

GDC_LOG_BORING_2016 IR737- BRISTOL COMMONS LOGS.GPJ GDC2013.GDT 1/25/21

GROUP DELTA CONSULTANTS
32 Mauchly, Suite B
Irvine, CA 92618

THIS SUMMARY APPLIES ONLY AT THE LOCATION OF THIS BORING AND AT THE TIME OF DRILLING. SUBSURFACE CONDITIONS MAY DIFFER AT OTHER LOCATIONS AND MAY CHANGE AT THIS LOCATION WITH THE PASSAGE OF TIME. THE DATA PRESENTED IS A SIMPLIFICATION OF THE ACTUAL CONDITIONS ENCOUNTERED.

FIGURE
A-2 a

BORING RECORD

PROJECT NAME	PROJECT NUMBER	HOLE ID
Bristol Commons Project	IR737	**B-1**

SITE LOCATION	START	FINISH	SHEET NO.
Santa Ana, CA	1/5/2021	1/5/2021	2 of 2

DRILLING COMPANY	DRILL RIG	DRILLING METHOD	LOGGED BY	CHECKED BY
ABC Liovin	CME 85	Hollow Stem Auger	Y. Wang	

HAMMER TYPE (WEIGHT/DROP)	HAMMER EFFICIENCY (ERi)	BORING DIA. (in)	TOTAL DEPTH (ft)	GROUND ELEV (ft)	DEPTH/*ELEV.* GW (ft)
Hammer: 140 lbs., Drop: 30 in.	62.6%	8	31.5	34	▽ 14.5 / *19.5* DURING DRILLING

DRIVE SAMPLER TYPE(S) & SIZE (ID)	NOTES	
SPT (1.4"), CAL (2.4")	$N_{60} = 1.04N_{SPT} = 0.70N_{MC}$	AFTER DRILLING ▼ NM / *NE*

DEPTH (feet)	ELEVATION (feet)	SAMPLE TYPE	SAMPLE NO.	PENETRATION RESISTANCE (BLOWS / 6 IN)	BLOW/FT "N"	SPT N^*_{60}	RECOVERY (%)	RQD (%)	MOISTURE (%)	DRY DENSITY (pcf)	ATTERBERG LIMITS (LL:PI)	OTHER TESTS	DRILLING METHOD	GRAPHIC LOG	DESCRIPTION AND CLASSIFICATION
			R-6	4 24 34	58	41			13	119					Fat CLAY (CH); very stiff; dark grey; moist; trace fine to medium SAND; high plasticity. PP=2.0 tsf
															CLAYEY SAND with GRAVEL (SC); very dense; olive brown; wet; mostly fine to medium SAND; little fines; little coarse rounded GRAVEL; nonplastic.
	10														
25			S-7 S-8	9 12 12	24	25									Fat CLAY with SAND (CH); olive grey to brown; wet; little fine to coarse SAND; high plasticity.
															CLAYEY SAND (SC); medium dense; olive brown; wet; mostly fine to coarse SAND; some fines; low to nonplastic.
	5														
30			R-9	26 36 38	74	52									Well-graded SAND with SILT (SW-SM), very dense; light olive brown; wet; mostly fine to coarse SAND; few fines; nonplastic.
	0														Total depth = 31.5 feet (Target depth reached). Groundwater encountered at 14.5 feet during drilling. Boring converted into a monitoring well on 1/5/2021 shortly after drilling. This Boring Record was prepared in general accordance with the Caltrans Soil & Rock Logging, Classification, and Presentation Manual (2010).
35															
	-5														

GDC_LOG_BORING_2016 IR737- BRISTOL COMMONS LOGS.GPJ GDC2013.GDT 1/25/21

GROUP DELTA CONSULTANTS
32 Mauchly, Suite B
Irvine, CA 92618

THIS SUMMARY APPLIES ONLY AT THE LOCATION OF THIS BORING AND AT THE TIME OF DRILLING. SUBSURFACE CONDITIONS MAY DIFFER AT OTHER LOCATIONS AND MAY CHANGE AT THIS LOCATION WITH THE PASSAGE OF TIME. THE DATA PRESENTED IS A SIMPLIFICATION OF THE ACTUAL CONDITIONS ENCOUNTERED.

FIGURE
A-2 b

BORING RECORD

PROJECT NAME	PROJECT NUMBER	HOLE ID
Bristol Commons Project	IR737	**B-2**

SITE LOCATION	START	FINISH	SHEET NO.
Santa Ana, CA	1/4/2021	1/4/2021	1 of 5

DRILLING COMPANY	DRILL RIG	DRILLING METHOD	LOGGED BY	CHECKED BY
Martini Drilling	CME 75	Hollow Stem Auger	G. Valdivia	

HAMMER TYPE (WEIGHT/DROP)	HAMMER EFFICIENCY (ERi)	BORING DIA. (in)	TOTAL DEPTH (ft)	GROUND ELEV (ft)	DEPTH/*ELEV.* GW (ft)
Hammer: 140 lbs., Drop: 30 in.	79.3%	8	71.5	33	▽ 16.0 / *17.0* DURING DRILLING

DRIVE SAMPLER TYPE(S) & SIZE (ID)	NOTES	
SPT (1.4"), CAL (2.4")	$N_{60} = 1.32N_{SPT} = 0.89N_{MC}$	AFTER DRILLING ▼ NM / *NE*

DEPTH (feet)	ELEVATION (feet)	SAMPLE TYPE	SAMPLE NO.	PENETRATION RESISTANCE (BLOWS / 6 IN)	BLOW/FT "N"	SPT N^*_{60}	RECOVERY (%)	RQD (%)	MOISTURE (%)	DRY DENSITY (pcf)	ATTERBERG LIMITS (LL:PI)	OTHER TESTS	DRILLING METHOD	GRAPHIC LOG	DESCRIPTION AND CLASSIFICATION
0															**PAVEMENT:** ASPHALT CONCRETE (4.5") over AGGREGATE BASE (2").
															Fat CLAY with SAND (CH): dark grey, moist, mostly fines, few fine grained SAND, high plasticity.
															Gravel =0.2% Sand = 17.8% Fines = 82%
	30														
5			R-1	4 7 11	18	16			32	87	54:33				Very stiff, PP=3.0 tsf
	25														
10			S-2	1 2 3	5	7									Stiff, PP=1.5 tsf
	20														
15			SH-3												Tan brown ▽
	15														

GDC_LOG_BORING_2016 IR737- BRISTOL COMMONS LOGS.GPJ GDC2013.GDT 1/25/21

GROUP DELTA CONSULTANTS
32 Mauchly, Suite B
Irvine, CA 92618

THIS SUMMARY APPLIES ONLY AT THE LOCATION OF THIS BORING AND AT THE TIME OF DRILLING. SUBSURFACE CONDITIONS MAY DIFFER AT OTHER LOCATIONS AND MAY CHANGE AT THIS LOCATION WITH THE PASSAGE OF TIME. THE DATA PRESENTED IS A SIMPLIFICATION OF THE ACTUAL CONDITIONS ENCOUNTERED.

FIGURE
A-3 a

BORING RECORD

PROJECT NAME	PROJECT NUMBER	HOLE ID
Bristol Commons Project	IR737	**B-2**

SITE LOCATION	START	FINISH	SHEET NO.
Santa Ana, CA	1/4/2021	1/4/2021	2 of 5

DRILLING COMPANY	DRILL RIG	DRILLING METHOD	LOGGED BY	CHECKED BY
Martini Drilling	CME 75	Hollow Stem Auger	G. Valdivia	

HAMMER TYPE (WEIGHT/DROP)	HAMMER EFFICIENCY (ERi)	BORING DIA. (in)	TOTAL DEPTH (ft)	GROUND ELEV (ft)	DEPTH/*ELEV.* GW (ft)
Hammer: 140 lbs., Drop: 30 in.	79.3%	8	71.5	33	▽ 16.0 / *17.0* DURING DRILLING

DRIVE SAMPLER TYPE(S) & SIZE (ID)	NOTES	
SPT (1.4"), CAL (2.4")	$N_{60} = 1.32N_{SPT} = 0.89N_{MC}$	AFTER DRILLING ▼ NM / *NE*

DEPTH (feet)	ELEVATION (feet)	SAMPLE TYPE	SAMPLE NO.	PENETRATION RESISTANCE (BLOWS / 6 IN)	BLOW/FT "N"	SPT N^*_{60}	RECOVERY (%)	RQD (%)	MOISTURE (%)	DRY DENSITY (pcf)	ATTERBERG LIMITS (LL:PI)	OTHER TESTS	DRILLING METHOD	GRAPHIC LOG	DESCRIPTION AND CLASSIFICATION
			R-4	2 4 6	10	9			34	87					Lean CLAY (CL); medium stiff; light brown; moist; medium plasticity. PP=0.75 tsf
	10														
25			S-5	2 2 4	6	8									SANDY lean CLAY (CL); very stiff; reddish brown; moist; some fine SAND; medium plasticity. PP=2.25 tsf
	5														
30			R-6	3 6 16	22	20			11	121					Well-graded SAND with CLAY (SW-SC); medium dense; light brown; wet; mostly coarse SAND; few fines; nonplastic.
	0														
35			S-7	8 6 8	14	18									Well-graded SAND (SW); medium dense; light brown; wet; mostly coarse SAND; trace fines; nonplastic.
	-5														

GDC_LOG_BORING_2016 IR737- BRISTOL COMMONS LOGS.GPJ GDC2013.GDT 1/25/21

GROUP DELTA CONSULTANTS
32 Mauchly, Suite B
Irvine, CA 92618

THIS SUMMARY APPLIES ONLY AT THE LOCATION OF THIS BORING AND AT THE TIME OF DRILLING. SUBSURFACE CONDITIONS MAY DIFFER AT OTHER LOCATIONS AND MAY CHANGE AT THIS LOCATION WITH THE PASSAGE OF TIME. THE DATA PRESENTED IS A SIMPLIFICATION OF THE ACTUAL CONDITIONS ENCOUNTERED.

FIGURE
A-3 b

BORING RECORD

PROJECT NAME	PROJECT NUMBER	HOLE ID
Bristol Commons Project	IR737	**B-2**

SITE LOCATION	START	FINISH	SHEET NO.
Santa Ana, CA	1/4/2021	1/4/2021	3 of 5

DRILLING COMPANY	DRILL RIG	DRILLING METHOD	LOGGED BY	CHECKED BY
Martini Drilling	CME 75	Hollow Stem Auger	G. Valdivia	

HAMMER TYPE (WEIGHT/DROP)	HAMMER EFFICIENCY (ERi)	BORING DIA. (in)	TOTAL DEPTH (ft)	GROUND ELEV (ft)	DEPTH/*ELEV.* GW (ft)
Hammer: 140 lbs., Drop: 30 in.	79.3%	8	71.5	33	▽ 16.0 / *17.0* DURING DRILLING

DRIVE SAMPLER TYPE(S) & SIZE (ID)	NOTES	
SPT (1.4"), CAL (2.4")	$N_{60} = 1.32N_{SPT} = 0.89N_{MC}$	AFTER DRILLING ▼ NM / *NE*

DEPTH (feet)	ELEVATION (feet)	SAMPLE TYPE	SAMPLE NO.	PENETRATION RESISTANCE (BLOWS / 6 IN)	BLOW/FT "N"	SPT N^*_{60}	RECOVERY (%)	RQD (%)	MOISTURE (%)	DRY DENSITY (pcf)	ATTERBERG LIMITS (LL:PI)	OTHER TESTS	DRILLING METHOD	GRAPHIC LOG	DESCRIPTION AND CLASSIFICATION
			R-8	4 7 13	20	18			25	101					SANDY SILT (ML); very stiff; tan brown; moist; some fine SAND; low plasticity. PP=2.75 tsf
	-10														
45			S-9	6 7 10	17	22									Stiff. PP=1.0 tsf
	-15														
50			R-10	6 12 16	28	25			31	93					Hard; yellow to greyish brown medium plasticity. PP=4.25 tsf
	-20														
55			S-11	3 5 10	15	20									SILT (ML); medium stiff; tan brown; moist; low plasticity. PP=0.75 tsf
	-25														

GDC_LOG_BORING_2016 IR737- BRISTOL COMMONS LOGS.GPJ GDC2013.GDT 1/25/21

GROUP DELTA CONSULTANTS
32 Mauchly, Suite B
Irvine, CA 92618

THIS SUMMARY APPLIES ONLY AT THE LOCATION OF THIS BORING AND AT THE TIME OF DRILLING. SUBSURFACE CONDITIONS MAY DIFFER AT OTHER LOCATIONS AND MAY CHANGE AT THIS LOCATION WITH THE PASSAGE OF TIME. THE DATA PRESENTED IS A SIMPLIFICATION OF THE ACTUAL CONDITIONS ENCOUNTERED.

FIGURE
A-3 c

BORING RECORD

PROJECT NAME	PROJECT NUMBER	HOLE ID
Bristol Commons Project	IR737	**B-2**

SITE LOCATION	START	FINISH	SHEET NO.
Santa Ana, CA	1/4/2021	1/4/2021	4 of 5

DRILLING COMPANY	DRILL RIG	DRILLING METHOD	LOGGED BY	CHECKED BY
Martini Drilling	CME 75	Hollow Stem Auger	G. Valdivia	

HAMMER TYPE (WEIGHT/DROP)	HAMMER EFFICIENCY (ERi)	BORING DIA. (in)	TOTAL DEPTH (ft)	GROUND ELEV (ft)	DEPTH/*ELEV.* GW (ft)
Hammer: 140 lbs., Drop: 30 in.	79.3%	8	71.5	33	▽ 16.0 / *17.0* DURING DRILLING

DRIVE SAMPLER TYPE(S) & SIZE (ID)	NOTES	
SPT (1.4"), CAL (2.4")	$N_{60} = 1.32N_{SPT} = 0.89N_{MC}$	AFTER DRILLING ▼ NM / *NE*

DEPTH (feet)	ELEVATION (feet)	SAMPLE TYPE	SAMPLE NO.	PENETRATION RESISTANCE (BLOWS / 6 IN)	BLOW/FT "N"	SPT N^*_{60}	RECOVERY (%)	RQD (%)	MOISTURE (%)	DRY DENSITY (pcf)	ATTERBERG LIMITS (LL:PI)	OTHER TESTS	DRILLING METHOD	GRAPHIC LOG	DESCRIPTION AND CLASSIFICATION
			R-12	4 7 12	19	17			29	95					Very stiff, PP=3.0 tsf
	-30														
65															
	-35														
70			S-13	2 4 8	12	16									SANDY lean CLAY (CL); medium stiff; dark grey; moist; some fine grained SAND; medium plasticity. PP=0.75 tsf
	-40														
75															
	-45														

GDC_LOG_BORING_2016 IR737- BRISTOL COMMONS LOGS.GPJ GDC2013.GDT 1/25/21

GROUP DELTA CONSULTANTS
32 Mauchly, Suite B
Irvine, CA 92618

THIS SUMMARY APPLIES ONLY AT THE LOCATION OF THIS BORING AND AT THE TIME OF DRILLING. SUBSURFACE CONDITIONS MAY DIFFER AT OTHER LOCATIONS AND MAY CHANGE AT THIS LOCATION WITH THE PASSAGE OF TIME. THE DATA PRESENTED IS A SIMPLIFICATION OF THE ACTUAL CONDITIONS ENCOUNTERED.

FIGURE
A-3 d

BORING RECORD

PROJECT NAME	PROJECT NUMBER	HOLE ID
Bristol Commons Project	IR737	**B-2**

SITE LOCATION	START	FINISH	SHEET NO.
Santa Ana, CA	1/4/2021	1/4/2021	5 of 5

DRILLING COMPANY	DRILL RIG	DRILLING METHOD	LOGGED BY	CHECKED BY
Martini Drilling	CME 75	Hollow Stem Auger	G. Valdivia	

HAMMER TYPE (WEIGHT/DROP)	HAMMER EFFICIENCY (ERi)	BORING DIA. (in)	TOTAL DEPTH (ft)	GROUND ELEV (ft)	DEPTH/*ELEV.* GW (ft)
Hammer: 140 lbs., Drop: 30 in.	79.3%	8	71.5	33	▽ 16.0 / *17.0* DURING DRILLING

DRIVE SAMPLER TYPE(S) & SIZE (ID)	NOTES	
SPT (1.4"), CAL (2.4")	$N_{60} = 1.32N_{SPT} = 0.89N_{MC}$	AFTER DRILLING ▼ NM / *NE*

DEPTH (feet)	ELEVATION (feet)	SAMPLE TYPE	SAMPLE NO.	PENETRATION RESISTANCE (BLOWS / 6 IN)	BLOW/FT "N"	SPT N^*_{60}	RECOVERY (%)	RQD (%)	MOISTURE (%)	DRY DENSITY (pcf)	ATTERBERG LIMITS (LL:PI)	OTHER TESTS	DRILLING METHOD	GRAPHIC LOG	DESCRIPTION AND CLASSIFICATION
			R-14	2 6 15	21	19									Well Graded SAND (SW): medium dense, brown, wet, mostly medium grained SAND.
	-50														Total depth = 81.5 feet (Target depth reached). Groundwater encountered at 16 feet during drilling. Boring backfilled on 1/4/2020 shortly after drilling with bentonite cement grout, and capped with cold patch asphalt. This Boring Record was prepared in general accordance with the Caltrans Soil & Rock Logging, Classification, and Presentation Manual (2010).
85															
	-55														
90															
	-60														
95															
	-65														

GDC_LOG_BORING_2016 IR737- BRISTOL COMMONS LOGS.GPJ GDC2013.GDT 1/25/21

GROUP DELTA CONSULTANTS
32 Mauchly, Suite B
Irvine, CA 92618

THIS SUMMARY APPLIES ONLY AT THE LOCATION OF THIS BORING AND AT THE TIME OF DRILLING. SUBSURFACE CONDITIONS MAY DIFFER AT OTHER LOCATIONS AND MAY CHANGE AT THIS LOCATION WITH THE PASSAGE OF TIME. THE DATA PRESENTED IS A SIMPLIFICATION OF THE ACTUAL CONDITIONS ENCOUNTERED.

FIGURE
A-3 e

BORING RECORD

PROJECT NAME	PROJECT NUMBER	HOLE ID
Bristol Commons Project	IR737	**B-3**

SITE LOCATION	START	FINISH	SHEET NO.
Santa Ana, CA	1/5/2021	1/5/2021	1 of 2

DRILLING COMPANY	DRILL RIG	DRILLING METHOD	LOGGED BY	CHECKED BY
ABC Liovin	CME 85	Hollow Stem Auger	Y. Wang	

HAMMER TYPE (WEIGHT/DROP)	HAMMER EFFICIENCY (ERi)	BORING DIA. (in)	TOTAL DEPTH (ft)	GROUND ELEV (ft)	DEPTH/*ELEV.* GW (ft)
Hammer: 140 lbs., Drop: 30 in.	62.6%	8	30.5	33	▽ 12.8 / *20.2* DURING DRILLING

DRIVE SAMPLER TYPE(S) & SIZE (ID)	NOTES	
SPT (1.4"), CAL (2.4")	$N_{60} = 1.04N_{SPT} = 0.70N_{MC}$	AFTER DRILLING ▼ NM / *NE*

DEPTH (feet)	ELEVATION (feet)	SAMPLE TYPE	SAMPLE NO.	PENETRATION RESISTANCE (BLOWS / 6 IN)	BLOW/FT "N"	SPT N^*_{60}	RECOVERY (%)	RQD (%)	MOISTURE (%)	DRY DENSITY (pcf)	ATTERBERG LIMITS (LL:PI)	OTHER TESTS	DRILLING METHOD	GRAPHIC LOG	DESCRIPTION AND CLASSIFICATION
															PAVEMENT: ASPHALT CONCRETE (2") over AGGREGATE BASE (6").
															Fat CLAY (CH); dark grey; moist; trace fine SAND; high plasticity.
	30		B-1												
5			R-2	4 4 5	9	6			27	86					
															Sandy CLAY (CL); stiff; olive brown with rusted color; moist; few fine SAND; medium plasticity. PP=1.5 tsf
	25														
10			S-3	3 3 4	7	7									Fat CLAY (CH); stiff; olive brown; moist; trace fine SAND; high plasticity. PP=1.5 ~ 1.75 tsf
	20														▽
15			SH-4												Stiff; dark grey. PP=1.25 tsf
	15														

GDC_LOG_BORING_2016 IR737- BRISTOL COMMONS LOGS.GPJ GDC2013.GDT 1/25/21

GROUP DELTA CONSULTANTS
32 Mauchly, Suite B
Irvine, CA 92618

THIS SUMMARY APPLIES ONLY AT THE LOCATION OF THIS BORING AND AT THE TIME OF DRILLING. SUBSURFACE CONDITIONS MAY DIFFER AT OTHER LOCATIONS AND MAY CHANGE AT THIS LOCATION WITH THE PASSAGE OF TIME. THE DATA PRESENTED IS A SIMPLIFICATION OF THE ACTUAL CONDITIONS ENCOUNTERED.

FIGURE
A-4 a

BORING RECORD

PROJECT NAME	PROJECT NUMBER	HOLE ID
Bristol Commons Project	IR737	**B-3**

SITE LOCATION	START	FINISH	SHEET NO.
Santa Ana, CA	1/5/2021	1/5/2021	2 of 2

DRILLING COMPANY	DRILL RIG	DRILLING METHOD	LOGGED BY	CHECKED BY
ABC Liovin	CME 85	Hollow Stem Auger	Y. Wang	

HAMMER TYPE (WEIGHT/DROP)	HAMMER EFFICIENCY (ERi)	BORING DIA. (in)	TOTAL DEPTH (ft)	GROUND ELEV (ft)	DEPTH/*ELEV.* GW (ft)
Hammer: 140 lbs., Drop: 30 in.	62.6%	8	30.5	33	▽ 12.8 / *20.2* DURING DRILLING

DRIVE SAMPLER TYPE(S) & SIZE (ID)	NOTES	
SPT (1.4"), CAL (2.4")	$N_{60} = 1.04N_{SPT} = 0.70N_{MC}$	AFTER DRILLING ▼ NM / *NE*

DEPTH (feet)	ELEVATION (feet)	SAMPLE TYPE	SAMPLE NO.	PENETRATION RESISTANCE (BLOWS / 6 IN)	BLOW/FT "N"	SPT N^*_{60}	RECOVERY (%)	RQD (%)	MOISTURE (%)	DRY DENSITY (pcf)	ATTERBERG LIMITS (LL:PI)	OTHER TESTS	DRILLING METHOD	GRAPHIC LOG	DESCRIPTION AND CLASSIFICATION
			R-5	5 7 12	19	13			21	106					Fat CLAY (CH); very stiff to hard; olive brown; moist; trace fine SAND; high plasticity. PP=2.5 ~ 4.0 tsf
25	10		S-6	6 6 10	16	17									SANDY lean CLAY (CL); olive brown; wet; some fine to medium SAND; medium plasticity.
30	5		R-7	50/6	50/6	50/6									Well-graded SAND with SILT (SW-SM), very dense; light olive brown; wet; mostly fine to coarse SAND; few fines; nonplastic.
35	0														Total depth = 30.5 feet (Target depth reached). Groundwater encountered at 12.8 feet during drilling. Boring backfilled on 1/5/2020 shortly after drilling with bentonite cement grout, and capped with cold patch asphalt. This Boring Record was prepared in general accordance with the Caltrans Soil & Rock Logging, Classification, and Presentation Manual (2010).
	-5														

GDC_LOG_BORING_2016 IR737- BRISTOL COMMONS LOGS.GPJ GDC2013.GDT 1/25/21

GROUP DELTA CONSULTANTS
32 Mauchly, Suite B
Irvine, CA 92618

THIS SUMMARY APPLIES ONLY AT THE LOCATION OF THIS BORING AND AT THE TIME OF DRILLING. SUBSURFACE CONDITIONS MAY DIFFER AT OTHER LOCATIONS AND MAY CHANGE AT THIS LOCATION WITH THE PASSAGE OF TIME. THE DATA PRESENTED IS A SIMPLIFICATION OF THE ACTUAL CONDITIONS ENCOUNTERED.

FIGURE
A-4 b

BORING RECORD

PROJECT NAME	PROJECT NUMBER	HOLE ID
Bristol Commons Project	IR737	**B-4**

SITE LOCATION	START	FINISH	SHEET NO.
Santa Ana, CA	2/14/2020	2/14/2020	1 of 3

DRILLING COMPANY	DRILL RIG	DRILLING METHOD	LOGGED BY	CHECKED BY
ABC Liovin	CME 85	Hollow Stem Auger	Y. Gao	A. Bieda

HAMMER TYPE (WEIGHT/DROP)	HAMMER EFFICIENCY (ERi)	BORING DIA. (in)	TOTAL DEPTH (ft)	GROUND ELEV (ft)	DEPTH/*ELEV.* GW (ft)
Hammer: 140 lbs., Drop: 30 in.	62.6%	8	51.5	34	▽ 12.4 / *13.2* DURING DRILLING

DRIVE SAMPLER TYPE(S) & SIZE (ID)	NOTES	
SPT (1.4"), CAL (2.4")	$N_{60} = 1.04N_{SPT} = 0.70N_{MC}$	AFTER DRILLING ▼ NM / *NE*

DEPTH (feet)	ELEVATION (feet)	SAMPLE TYPE	SAMPLE NO.	PENETRATION RESISTANCE (BLOWS / 6 IN)	BLOW/FT "N"	SPT N^*_{60}	RECOVERY (%)	RQD (%)	MOISTURE (%)	DRY DENSITY (pcf)	ATTERBERG LIMITS (LL:PI)	OTHER TESTS	DRILLING METHOD	GRAPHIC LOG	DESCRIPTION AND CLASSIFICATION
	25														**PAVEMENT:** ASPHALT CONCRETE (2.4") over AGGREGATE BASE (2.4").
															Lean CLAY (CL); yellowish to reddish brown; moist; mostly fines; little fine SAND; little fine to coarse GRAVEL; medium plasticity.
			B-1									CR			
5															Yellowish brown.
	20		R-2	3 4 4	8	6			25.6	91					Medium stiff; reddish brown; little fine to coarse SAND.
10															
	15		R-3	5 7 9	16	11									Stiff; dark reddish brown; trace fine SAND.
15															
	10		R-4	4 5 6	11	8			29.4	94		PA PI C			Fat CLAY (CH); medium stiff; dark reddish brown; moist; mostly fines; trace fine SAND; trace fine GRAVEL; high plasticity. (LL=56; PL=22; PI=34)

GDC_LOG_BORING_2016 IR737- BRISTOL COMMONS LOGS.GPJ GDC2013.GDT 1/25/21

GROUP DELTA CONSULTANTS
32 Mauchly, Suite B
Irvine, CA 92618

THIS SUMMARY APPLIES ONLY AT THE LOCATION OF THIS BORING AND AT THE TIME OF DRILLING. SUBSURFACE CONDITIONS MAY DIFFER AT OTHER LOCATIONS AND MAY CHANGE AT THIS LOCATION WITH THE PASSAGE OF TIME. THE DATA PRESENTED IS A SIMPLIFICATION OF THE ACTUAL CONDITIONS ENCOUNTERED.

FIGURE
A-5 a

BORING RECORD

PROJECT NAME	PROJECT NUMBER	HOLE ID
Bristol Commons Project	IR737	**B-4**

SITE LOCATION	START	FINISH	SHEET NO.
Santa Ana, CA	2/14/2020	2/14/2020	2 of 3

DRILLING COMPANY	DRILL RIG	DRILLING METHOD	LOGGED BY	CHECKED BY
ABC Liovin	CME 85	Hollow Stem Auger	Y. Gao	A. Bieda

HAMMER TYPE (WEIGHT/DROP)	HAMMER EFFICIENCY (ERi)	BORING DIA. (in)	TOTAL DEPTH (ft)	GROUND ELEV (ft)	DEPTH/*ELEV.* GW (ft)
Hammer: 140 lbs., Drop: 30 in.	62.6%	8	51.5	34	▽ 12.4 / *13.2* DURING DRILLING

DRIVE SAMPLER TYPE(S) & SIZE (ID)	NOTES	
SPT (1.4"), CAL (2.4")	$N_{60} = 1.04N_{SPT} = 0.70N_{MC}$	AFTER DRILLING ▼ NM / *NE*

DEPTH (feet)	ELEVATION (feet)	SAMPLE TYPE	SAMPLE NO.	PENETRATION RESISTANCE (BLOWS / 6 IN)	BLOW/FT "N"	SPT N^*_{60}	RECOVERY (%)	RQD (%)	MOISTURE (%)	DRY DENSITY (pcf)	ATTERBERG LIMITS (LL:PI)	OTHER TESTS	DRILLING METHOD	GRAPHIC LOG	DESCRIPTION AND CLASSIFICATION
	-5		S-5	1 2 2	4	4									Fat CLAY (CH); soft; dark reddish brown; moist; mostly fines; trace fine SAND; trace fine GRAVEL; high plasticity. (95% SAND; 5% Fines)
25															
	-0		R-6	7 7 7	14	10			15.2	116					Lean CLAY (CL); hard; olive brown; moist; mostly fines; little fine SAND; medium to low plasticity; oxidation staining present.
30															
	-5		S-7	5 12 14	26	27									CLAYEY SAND (SC); dense; reddish brown; moist; mostly fine to coarse SAND; little fines; low plasticity; oxidation staining present.
35															
	-10		R-8	4 16 33	49	34									SILTY SAND (SM); very dense; reddish brown; wet; mostly medium to coarse SAND; little fines; nonplastic.

GDC_LOG_BORING_2016 IR737- BRISTOL COMMONS LOGS.GPJ GDC2013.GDT 1/25/21

GROUP DELTA CONSULTANTS
32 Mauchly, Suite B
Irvine, CA 92618

THIS SUMMARY APPLIES ONLY AT THE LOCATION OF THIS BORING AND AT THE TIME OF DRILLING. SUBSURFACE CONDITIONS MAY DIFFER AT OTHER LOCATIONS AND MAY CHANGE AT THIS LOCATION WITH THE PASSAGE OF TIME. THE DATA PRESENTED IS A SIMPLIFICATION OF THE ACTUAL CONDITIONS ENCOUNTERED.

FIGURE
A-5 b

BORING RECORD

PROJECT NAME	PROJECT NUMBER	HOLE ID
Bristol Commons Project	IR737	**B-4**

SITE LOCATION	START	FINISH	SHEET NO.
Santa Ana, CA	2/14/2020	2/14/2020	3 of 3

DRILLING COMPANY	DRILL RIG	DRILLING METHOD	LOGGED BY	CHECKED BY
ABC Liovin	CME 85	Hollow Stem Auger	Y. Gao	A. Bieda

HAMMER TYPE (WEIGHT/DROP)	HAMMER EFFICIENCY (ERi)	BORING DIA. (in)	TOTAL DEPTH (ft)	GROUND ELEV (ft)	DEPTH/*ELEV.* GW (ft)
Hammer: 140 lbs., Drop: 30 in.	62.6%	8	51.5	34	▽ 12.4 / *13.2* DURING DRILLING

DRIVE SAMPLER TYPE(S) & SIZE (ID)	NOTES	
SPT (1.4"), CAL (2.4")	$N_{60} = 1.04N_{SPT} = 0.70N_{MC}$	AFTER DRILLING ▼ NM / *NE*

DEPTH (feet)	ELEVATION (feet)	SAMPLE TYPE	SAMPLE NO.	PENETRATION RESISTANCE (BLOWS / 6 IN)	BLOW/FT "N"	SPT N^*_{60}	RECOVERY (%)	RQD (%)	MOISTURE (%)	DRY DENSITY (pcf)	ATTERBERG LIMITS (LL:PI)	OTHER TESTS	DRILLING METHOD	GRAPHIC LOG	DESCRIPTION AND CLASSIFICATION
	-15		S-9	30 50/6"	REF	REF									Poorly-graded SAND (SP); very dense; reddish brown; wet; mostly medium to coarse SAND; trace fines; nonplastic.
45	-20		R-10	24 50/6"	REF	REF			11.3	129					Trace fine SAND.
50	-25		S-11	9 15 15	30	31									Medium dense.
															Lean CLAY (CL); very stiff; olive gray; wet; mostly fines; trace fine SAND; low plasticity; in shoe of samples.
55	-30														Total depth = 51.5 feet (Target depth reached). Groundwater encountered at 12.4 feet during drilling. Boring backfilled on 2/14/2020 shortly after drilling with bentonite cement grout, and capped with black-dyed rapid set concrete. This Boring Record was prepared in accordance with the Caltrans Soil & Rock Logging, Classification, and Presentation Manual (2010).

GDC_LOG_BORING_2016 IR737- BRISTOL COMMONS LOGS.GPJ GDC2013.GDT 1/25/21

GROUP DELTA CONSULTANTS
32 Mauchly, Suite B
Irvine, CA 92618

THIS SUMMARY APPLIES ONLY AT THE LOCATION OF THIS BORING AND AT THE TIME OF DRILLING. SUBSURFACE CONDITIONS MAY DIFFER AT OTHER LOCATIONS AND MAY CHANGE AT THIS LOCATION WITH THE PASSAGE OF TIME. THE DATA PRESENTED IS A SIMPLIFICATION OF THE ACTUAL CONDITIONS ENCOUNTERED.

FIGURE
A-5 c

BORING RECORD

PROJECT NAME	PROJECT NUMBER	HOLE ID
Bristol Commons Project	IR737	**B-5**

SITE LOCATION	START	FINISH	SHEET NO.
Santa Ana, CA	2/14/2020	2/14/2020	1 of 2

DRILLING COMPANY	DRILL RIG	DRILLING METHOD	LOGGED BY	CHECKED BY
ABC Liovin	CME 85	Hollow Stem Auger	Y. Gao	A. Bieda

HAMMER TYPE (WEIGHT/DROP)	HAMMER EFFICIENCY (ERi)	BORING DIA. (in)	TOTAL DEPTH (ft)	GROUND ELEV (ft)	DEPTH/*ELEV.* GW (ft)
Hammer: 140 lbs., Drop: 30 in.	62.6%	8	31.5	34	▽ 15.1 / *11.3* DURING DRILLING

DRIVE SAMPLER TYPE(S) & SIZE (ID)	NOTES	
SPT (1.4"), CAL (2.4")	$N_{60} = 1.04N_{SPT} = 0.70N_{MC}$	AFTER DRILLING ▼ NM / *NE*

DEPTH (feet)	ELEVATION (feet)	SAMPLE TYPE	SAMPLE NO.	PENETRATION RESISTANCE (BLOWS / 6 IN)	BLOW/FT "N"	SPT N^*_{60}	RECOVERY (%)	RQD (%)	MOISTURE (%)	DRY DENSITY (pcf)	ATTERBERG LIMITS (LL:PI)	OTHER TESTS	DRILLING METHOD	GRAPHIC LOG	DESCRIPTION AND CLASSIFICATION
	25		B-1									EI			**PAVEMENT:** ASPHALT CONCRETE (2.4") over AGGREGATE BASE (3.6"). Lean CLAY (CL); brownish gray; moist; mostly fines; few fine SAND; medium plasticity. (EI=85; Medium)
5			R-2	6 7 12	19	13									Very stiff.
	20														
10			S-3	1 1 2	3	3						PA PI			Fat CLAY (CH); soft; yellowish brown; moist; mostly fines; trace fine SAND; high plasticity. (4% SAND; 96% Fines) & (LL=66; PL=26; PI=40)
15															▽ Stiff; yellowsh brown to greenish brown; wet; few trace fine SAND.
	10		R-4	2 4 7	11	8						UU			

GDC_LOG_BORING_2016 IR737- BRISTOL COMMONS LOGS.GPJ GDC2013.GDT 1/25/21

GROUP DELTA CONSULTANTS
32 Mauchly, Suite B
Irvine, CA 92618

THIS SUMMARY APPLIES ONLY AT THE LOCATION OF THIS BORING AND AT THE TIME OF DRILLING. SUBSURFACE CONDITIONS MAY DIFFER AT OTHER LOCATIONS AND MAY CHANGE AT THIS LOCATION WITH THE PASSAGE OF TIME. THE DATA PRESENTED IS A SIMPLIFICATION OF THE ACTUAL CONDITIONS ENCOUNTERED.

FIGURE
A-6 a

BORING RECORD

PROJECT NAME	PROJECT NUMBER	HOLE ID
Bristol Commons Project	IR737	**B-5**

SITE LOCATION	START	FINISH	SHEET NO.
Santa Ana, CA	2/14/2020	2/14/2020	2 of 2

DRILLING COMPANY	DRILL RIG	DRILLING METHOD	LOGGED BY	CHECKED BY
ABC Liovin	CME 85	Hollow Stem Auger	Y. Gao	A. Bieda

HAMMER TYPE (WEIGHT/DROP)	HAMMER EFFICIENCY (ERi)	BORING DIA. (in)	TOTAL DEPTH (ft)	GROUND ELEV (ft)	DEPTH/*ELEV.* GW (ft)
Hammer: 140 lbs., Drop: 30 in.	62.6%	8	31.5	34	▽ 15.1 / *11.3* DURING DRILLING

DRIVE SAMPLER TYPE(S) & SIZE (ID)	NOTES	
SPT (1.4"), CAL (2.4")	$N_{60} = 1.04N_{SPT} = 0.70N_{MC}$	AFTER DRILLING ▼ NM / *NE*

DEPTH (feet)	ELEVATION (feet)	SAMPLE TYPE	SAMPLE NO.	PENETRATION RESISTANCE (BLOWS / 6 IN)	BLOW/FT "N"	SPT N^*_{60}	RECOVERY (%)	RQD (%)	MOISTURE (%)	DRY DENSITY (pcf)	ATTERBERG LIMITS (LL:PI)	OTHER TESTS	DRILLING METHOD	GRAPHIC LOG	DESCRIPTION AND CLASSIFICATION
	5		S-5	3 3 4	7	7									Fat CLAY (CH); medium stiff; yellowish brown; moist; mostly fines; trace fine SAND; high plasticity.
25	0		R-6	4 5 7	12	8									SANDY lean CLAY (CL); very stiff; reddish brown; wet; mostly fines; little fine SAND; medium plasticity.
30	-5		S-7	5 7 13	20	21									Light reddish brown.
35	-10														Total depth = 31.5 feet (Target depth reached). Groundwater encountered at 15.1 feet during drilling. Boring backfilled on 2/14/2020 shortly after drilling with bentonite cement grout, and capped with black-dyed rapid set concrete. This Boring Record was prepared in accordance with the Caltrans Soil & Rock Logging, Classification, and Presentation Manual (2010).

GDC_LOG_BORING_2016 IR737- BRISTOL COMMONS LOGS.GPJ GDC2013.GDT 1/25/21

GROUP DELTA CONSULTANTS
32 Mauchly, Suite B
Irvine, CA 92618

THIS SUMMARY APPLIES ONLY AT THE LOCATION OF THIS BORING AND AT THE TIME OF DRILLING. SUBSURFACE CONDITIONS MAY DIFFER AT OTHER LOCATIONS AND MAY CHANGE AT THIS LOCATION WITH THE PASSAGE OF TIME. THE DATA PRESENTED IS A SIMPLIFICATION OF THE ACTUAL CONDITIONS ENCOUNTERED.

FIGURE
A-6 b

BORING RECORD

PROJECT NAME	PROJECT NUMBER	HOLE ID
Bristol Commons Project	IR737	**P-1**

SITE LOCATION	START	FINISH	SHEET NO.
Santa Ana, CA	1/5/2021	1/5/2021	1 of 1

DRILLING COMPANY	DRILL RIG	DRILLING METHOD	LOGGED BY	CHECKED BY
Martini Drilling	CME 75	Hollow Stem Auger	G. Valdivia	

HAMMER TYPE (WEIGHT/DROP)	HAMMER EFFICIENCY (ERi)	BORING DIA. (in)	TOTAL DEPTH (ft)	GROUND ELEV (ft)	DEPTH/*ELEV.* GW (ft)
		8	5	34	▽ NE / *NE* DURING DRILLING

DRIVE SAMPLER TYPE(S) & SIZE (ID)	NOTES	
		▼ / *NE* AFTER DRILLING

DEPTH (feet)	ELEVATION (feet)	SAMPLE TYPE	SAMPLE NO.	PENETRATION RESISTANCE (BLOWS / 6 IN)	BLOW/FT "N"	SPT N^*_{60}	RECOVERY (%)	RQD (%)	MOISTURE (%)	DRY DENSITY (pcf)	ATTERBERG LIMITS (LL:PI)	OTHER TESTS	DRILLING METHOD	GRAPHIC LOG	DESCRIPTION AND CLASSIFICATION
0	30														**PAVEMENT:** ASPHALT CONCRETE (2") over AGGREGATE BASE (6").
															CLAYEY SAND (SC); dark olive brown; moist; mostly fine to medium SAND; little fines; trace fine subangular GRAVEL; nonplastic.
5															Fat CLAY (CH); dark grey; moist; trace fine SAND; high plasticity.
															Total depth = 5.0 feet (Target depth reached). Groundwater was not encountered during drilling. 2-inch percolation pipe was installed shortly after drilling. This Boring Record was prepared in general accordance with the Caltrans Soil & Rock Logging, Classification, and Presentation Manual (2010).
10	25														
15	20														
	15														

GDC_LOG_BORING_2016 IR737- BRISTOL COMMONS LOGS.GPJ GDC2013.GDT 1/25/21

GROUP DELTA CONSULTANTS
32 Mauchly, Suite B
Irvine, CA 92618

THIS SUMMARY APPLIES ONLY AT THE LOCATION OF THIS BORING AND AT THE TIME OF DRILLING. SUBSURFACE CONDITIONS MAY DIFFER AT OTHER LOCATIONS AND MAY CHANGE AT THIS LOCATION WITH THE PASSAGE OF TIME. THE DATA PRESENTED IS A SIMPLIFICATION OF THE ACTUAL CONDITIONS ENCOUNTERED.

FIGURE
A-7

BORING RECORD

PROJECT NAME	PROJECT NUMBER	HOLE ID
Bristol Commons Project	IR737	**P-2**

SITE LOCATION	START	FINISH	SHEET NO.
Santa Ana, CA	1/5/2021	1/5/2021	1 of 1

DRILLING COMPANY	DRILL RIG	DRILLING METHOD	LOGGED BY	CHECKED BY
Martini Drilling	CME 75	Hollow Stem Auger	G. Valdivia	

HAMMER TYPE (WEIGHT/DROP)	HAMMER EFFICIENCY (ERi)	BORING DIA. (in)	TOTAL DEPTH (ft)	GROUND ELEV (ft)	DEPTH/*ELEV.* GW (ft)
		8	5	33	▽ NE / *NE* DURING DRILLING

DRIVE SAMPLER TYPE(S) & SIZE (ID)	NOTES	
		AFTER DRILLING ▼ / *NE*

DEPTH (feet)	ELEVATION (feet)	SAMPLE TYPE	SAMPLE NO.	PENETRATION RESISTANCE (BLOWS / 6 IN)	BLOW/FT "N"	SPT N^*_{60}	RECOVERY (%)	RQD (%)	MOISTURE (%)	DRY DENSITY (pcf)	ATTERBERG LIMITS (LL:PI)	OTHER TESTS	DRILLING METHOD	GRAPHIC LOG	DESCRIPTION AND CLASSIFICATION
0	25														**PAVEMENT:** ASPHALT CONCRETE (4.5") over AGGREGATE BASE (2").
															Fat CLAY with SAND (CH): dark grey, moist, mostly fines, few fine grained SAND, high plasticity.
5	20														Total depth = 5.0 feet (Target depth reached). Groundwater was not encountered during drilling. 2-inch percolation pipe was installed shortly after drilling. This Boring Record was prepared in general accordance with the Caltrans Soil & Rock Logging, Classification, and Presentation Manual (2010).
10	15														
15	10														

GDC_LOG_BORING_2016 IR737- BRISTOL COMMONS LOGS.GPJ GDC2013.GDT 1/25/21

GROUP DELTA CONSULTANTS
32 Mauchly, Suite B
Irvine, CA 92618

THIS SUMMARY APPLIES ONLY AT THE LOCATION OF THIS BORING AND AT THE TIME OF DRILLING. SUBSURFACE CONDITIONS MAY DIFFER AT OTHER LOCATIONS AND MAY CHANGE AT THIS LOCATION WITH THE PASSAGE OF TIME. THE DATA PRESENTED IS A SIMPLIFICATION OF THE ACTUAL CONDITIONS ENCOUNTERED.

FIGURE
A-8

BORING RECORD

PROJECT NAME	PROJECT NUMBER	HOLE ID
Bristol Commons Project	IR737	**P-5**

SITE LOCATION	START	FINISH	SHEET NO.
Santa Ana, CA	1/5/2021	1/5/2021	1 of 1

DRILLING COMPANY	DRILL RIG	DRILLING METHOD	LOGGED BY	CHECKED BY
Martini Drilling	CME 75	Hollow Stem Auger	G. Valdivia	

HAMMER TYPE (WEIGHT/DROP)	HAMMER EFFICIENCY (ERi)	BORING DIA. (in)	TOTAL DEPTH (ft)	GROUND ELEV (ft)	DEPTH/*ELEV.* GW (ft)
		8	5	34	▽ NE / *NE* DURING DRILLING

DRIVE SAMPLER TYPE(S) & SIZE (ID)	NOTES	AFTER DRILLING
		▼ / *NE*

DEPTH (feet)	ELEVATION (feet)	SAMPLE TYPE	SAMPLE NO.	PENETRATION RESISTANCE (BLOWS / 6 IN)	BLOW/FT "N"	SPT N^*_{60}	RECOVERY (%)	RQD (%)	MOISTURE (%)	DRY DENSITY (pcf)	ATTERBERG LIMITS (LL:PI)	OTHER TESTS	DRILLING METHOD	GRAPHIC LOG	DESCRIPTION AND CLASSIFICATION
0	25														**PAVEMENT:** ASPHALT CONCRETE (2.4") over AGGREGATE BASE (3.6").
															Lean CLAY (CL); brownish gray; moist; mostly fines; few fine SAND; medium plasticity.
5	20														Total depth = 5.0 feet (Target depth reached). Groundwater was not encountered during drilling. 2-inch percolation pipe was installed shortly after drilling. This Boring Record was prepared in general accordance with the Caltrans Soil & Rock Logging, Classification, and Presentation Manual (2010).
10	15														
15	10														

GDC_LOG_BORING_2016 IR737- BRISTOL COMMONS LOGS.GPJ GDC2013.GDT 1/25/21

GROUP DELTA CONSULTANTS
32 Mauchly, Suite B
Irvine, CA 92618

THIS SUMMARY APPLIES ONLY AT THE LOCATION OF THIS BORING AND AT THE TIME OF DRILLING. SUBSURFACE CONDITIONS MAY DIFFER AT OTHER LOCATIONS AND MAY CHANGE AT THIS LOCATION WITH THE PASSAGE OF TIME. THE DATA PRESENTED IS A SIMPLIFICATION OF THE ACTUAL CONDITIONS ENCOUNTERED.

FIGURE
A-9

BORING RECORD

PROJECT NAME	PROJECT NUMBER	HOLE ID
Bristol Commons Project	IR737	**P-6**

SITE LOCATION	START	FINISH	SHEET NO.
Santa Ana, CA	1/5/2021	1/5/2021	1 of 1

DRILLING COMPANY	DRILL RIG	DRILLING METHOD	LOGGED BY	CHECKED BY
Martini Drilling	CME 75	Hollow Stem Auger	G. Valdivia	

HAMMER TYPE (WEIGHT/DROP)	HAMMER EFFICIENCY (ERi)	BORING DIA. (in)	TOTAL DEPTH (ft)	GROUND ELEV (ft)	DEPTH/*ELEV.* GW (ft)
		8	5	34	▽ NE / *NE* DURING DRILLING

DRIVE SAMPLER TYPE(S) & SIZE (ID)	NOTES	
		AFTER DRILLING ▼ / *NE*

DEPTH (feet)	ELEVATION (feet)	SAMPLE TYPE	SAMPLE NO.	PENETRATION RESISTANCE (BLOWS / 6 IN)	BLOW/FT "N"	SPT N^*_{60}	RECOVERY (%)	RQD (%)	MOISTURE (%)	DRY DENSITY (pcf)	ATTERBERG LIMITS (LL:PI)	OTHER TESTS	DRILLING METHOD	GRAPHIC LOG	DESCRIPTION AND CLASSIFICATION
0	25														**PAVEMENT:** ASPHALT CONCRETE (2.4") over AGGREGATE BASE (3.6").
															Fat CLAY with SAND (CH): dark grey, moist, mostly fines, few fine grained SAND, high plasticity.
5	20														Total depth = 5.0 feet (Target depth reached). Groundwater was not encountered during drilling. 2-inch percolation pipe was installed shortly after drilling. This Boring Record was prepared in general accordance with the Caltrans Soil & Rock Logging, Classification, and Presentation Manual (2010).
10	15														
15	10														

GDC_LOG_BORING_2016 IR737- BRISTOL COMMONS LOGS.GPJ GDC2013.GDT 1/25/21

GROUP DELTA CONSULTANTS
32 Mauchly, Suite B
Irvine, CA 92618

THIS SUMMARY APPLIES ONLY AT THE LOCATION OF THIS BORING AND AT THE TIME OF DRILLING. SUBSURFACE CONDITIONS MAY DIFFER AT OTHER LOCATIONS AND MAY CHANGE AT THIS LOCATION WITH THE PASSAGE OF TIME. THE DATA PRESENTED IS A SIMPLIFICATION OF THE ACTUAL CONDITIONS ENCOUNTERED.

FIGURE
A-10

EARTHSPECTIVES
250 Goddard
Irvine, California 92618

Phone: (949) 777-1270
Fax: (949) 777-1283

October 29, 2019

ABC Liovin Drilling Inc.
1180 East Burnett Street
Signal Hill, California 90755

Attention: Mr. Ivan Liovin

Dear Mr. Liovin:

SPT Hammer Energy Measurement
Drill Rigs R-1 (CME-85) and R-5 (CME-85)
ES Project No. 190806-365

INTRODUCTION

This letter report summarizes the results of EarthSpectives' (ES) SPT hammer energy measurements performed on October 12, 2019. It provides a description of the test program and the results. Testing was performed on two CME 85 Drill Rigs equipped with Auto Trip hammers.

SPT energy measurements were accomplished using a Pile Driving Analyzer (PDA) system manufactured by Pile Dynamics, Inc. and was conducted in general accordance with ASTM 4945 and 6066 test standards. Results are summarized in Table 1, while more details regarding energy records are provided in Appendix A.

TESTING CONDITIONS

SPT hammer energy measurements were performed on two drill rig/hammer combination that were equipped with an automatic trip hammer. Drill rigs R-1 and R-5 were both CME-85 Rigs. Samplings were performed using NWJ drilling rod.

INSTRUMENTATION

SPT energy measurements were performed by placing a 2 ft instrumented section of drill rod at the top of the drill string between the hammer and the sampling rods. The instruments consist of two sets of accelerometers and strain transducers, mounted on opposite sides of the drill rod, with a view to evaluate normal and eccentric effects. The analyzer acquired and processed the signals during sampling, and provided real-time evaluations of the maximum SPT hammer transferred energy. The raw data were stored directly on a portable field computer for subsequent analysis in the office.

RESULTS

Results from SPT hammer energy measurements are summarized in Tables 1. It shows the Energy Transfer Ratio (ETR) for every sampling depth for the tested drill rig/hammer. ETR is the ratio of the measured maximum transferred energy to rated energy of the hammer which is the product of the weight of the hammer times the height of fall (140 lb x 30 inches = 4200 lb-in = 0.35 kip-ft).

Plots of the maximum transferred energy, energy transfer ratio, and blow rate is provided as function of depth in Appendix A. Table immediately following the plot also provides the minimum, maximum, and average values at every sampling depth. In general, average ETR value for the tested hammers were 83.5% and 62.6% for Drill Rigs R-1 and R-5, respectively, over all the sampling intervals as shown in Table 1.

TABLE 1 – SUMMARY OF SPT HAMMER ENERGY MEASUREMTS

Drill Rig Number Type and Model	**AVERAGE SPT HAMMER EFFICIENCY (ENERGY TRANSFER RATIO)**			
	Data Set # 1	Data Set # 2	Data Set # 3	Data Set # 4
Drill Rig R-1 CME 85	80.5%	87.5%	84%	82.1%
Drill Rig R-5 CME 85	63.7%	65.1%	61.4%	60.1%

LIMITATIONS

Professional judgments represented in this report are based on evaluations of the technical information gathered, our understanding of the proposed construction, and our general experience in the geotechnical field. We do not guarantee the performance of the project in any respect, only that our engineering work and judgments are rendered while striving to meet the standard of care of our profession at this time.

CLOSURE

We hope the above information satisfies the project needs at this time. Please call if you have any question or need more information.

Sincerely submitted for EarthSpectives,

Hossein Rashidi

Hossein K. Rashidi, PhD, PE
Principal Engineer

REGISTERED PROFESSIONAL ENGINEER
HOSSEIN K. RASHIDI
No. C 055140
Exp. 6/30/18
CIVIL
STATE OF CALIFORNIA

EARTHSPECTIVES
1920 E Warner Avenue, Suite 3-M
Santa Ana, California 92705

Phone: (949) 777-1270
Fax: (949) 777-1283

June 26, 2019

GeoDesign, Inc.
2121 S Towne Centre Place, Suite 104
Anaheim, California 92806
Attention: Mr. Andrew Atry

Dear Mr. Atry:

SPT Hammer Energy Measurement
Martini CME 75 Drill Rig # 1 Serial Number 208497 and CME 75 Drill Rig # 3 Serial Number 174752
ES Project No. 190604-254

INTRODUCTION

This letter report summarizes the results of EarthSpectives' (ES) SPT hammer energy measurements performed on June 14, 2019. It provides a description of the test program and the results. Testing was performed on two Drill Rigs equipped with Auto Trip hammers.

SPT energy measurements were accomplished using a Pile Driving Analyzer (PDA) system manufactured by Pile Dynamics, Inc. and was conducted in general accordance with ASTM 4945 and 6066 test standards. Results are summarized in Table 1, while more details regarding energy records are provided in Appendix A.

TESTING CONDITIONS

SPT hammer energy measurements were performed on two drill rig/hammer combination that were equipped with an automatic trip hammer. Both rigs were CME 75 Drill Rigs. They were Drill Rig # 1 with Serial Number 208497 and Drill Rig # 3 with Serial Number 174752. Samplings were performed using an AWJ drill rod.

INSTRUMENTATION

SPT energy measurements were performed by placing a 2 ft instrumented section of drill rod at the top of the drill string between the hammer and the sampling rods. The instruments consist of two sets of accelerometers and strain transducers, mounted on opposite sides of the drill rod, with a view to evaluate normal and eccentric effects. The analyzer acquired and processed the signals during sampling, and provided real-time evaluations of the maximum SPT hammer transferred energy. The raw data were stored directly on a portable field computer for subsequent analysis in the office.

RESULTS

Results from SPT hammer energy measurements are summarized in Tables 1. It shows the Energy Transfer Ratio (ETR) for every sampling depth for the tested drill rig/hammer. ETR is the ratio of the measured maximum transferred energy to rated energy of the hammer which is the product of the weight of the hammer times the height of fall (140 lb x 30 inches = 4200 lb-in = 0.35 kip-ft).

Plots of the maximum transferred energy, energy transfer ratio, and blow rate is provided as function of depth in Appendix A. Table immediately following the plot also provides the minimum, maximum, and average values at every sampling depth. In general, average ETR value for the tested hammers were 77.5% and 79.3% for Drill Rigs # 1 (Serial Number 208497) and # 3 (Serial Number 174752), respectively, over all the sampling intervals as shown in Table 1.

TABLE 1 – SUMMARY OF SPT HAMMER ENERGY MEASUREMTS

Drill Rig Model, and Rig No.	AVERAGE SPT HAMMER EFFICIENCY (ENERGY TRANSFER RATIO)			
	Data Set # 1	Data Set # 2	Data Set #3	Average
Drill Rig # 1 CME 75 Serial Number 208497	78%	77.5%	76.6%	77.5%
Drill Rig # 3 CME 75 Serial Number 174752	82.3%	76.2%	77.4%	79.3%

LIMITATIONS

Professional judgments represented in this report are based on evaluations of the technical information gathered, our understanding of the proposed construction, and our general experience in the geotechnical field. We do not guarantee the performance of the project in any respect, only that our engineering work and judgments are rendered while striving to meet the standard of care of our profession at this time.

CLOSURE

We hope the above information satisfies the project needs at this time. Please call if you have any question or need more information.

Sincerely submitted for EarthSpectives,

Hossein K. Rashidi, PhD, PE
Principal Engineer



APPENDIX B
LABORATORY TESTING

APPENDIX B
LABORATORY TESTING

B.1 General

The laboratory testing was performed using appropriate American Society for Testing and Materials (ASTM) and Caltrans Test Methods (CTM).

Modified California drive samples, Standard Penetration Test (SPT) drive samples, and bulk samples collected during the field investigation were carefully sealed in the field to prevent moisture loss. The samples of earth materials were then transported to the laboratory for further examination and testing. Tests were performed on selected samples as an aid in classifying the earth materials and to evaluate their physical properties and engineering characteristics. Laboratory testing for this investigation included:

- Soil Classification: USCS (ASTM D 2487) and Visual Manual (ASTM D 2488);
- Moisture content (ASTM D 2216) and Dry Unit Weight (ASTM D 2937);
- Atterberg Limits (ASTM D 4318);
- Grain Size Distribution (ASTM D 422) & % Passing #200 Sieve (ASTM D 1140);
- Triaxial Compression: UU (ASTM D 2850);
- One-Dimensional Consolidation (ASTM D 2435);
- Expansion Index (D 4829); and
- Soil Corrosivity:
    - pH (CTM 643);
    - Water-Soluble Sulfate (ASTM D 516, CTM 417);
    - Water-Soluble Chloride(Ion-Specific Probe, CTM 422);
    - Minimum Electrical Resistivity (CTM 643).

Brief descriptions of the laboratory testing program and test results are presented below.

B.2 Soil Classification

Earth materials recovered from subsurface explorations were classified in general accordance with Caltrans' "Soil and Rock Logging Classification Manual, 2010". The subsurface soils were classified visually / manually in the field in accordance with the Unified Soil Classification System (USCS) following ASTM D 2488; soil classifications were modified as necessary based on testing in the laboratory in accordance with ASTM D 2487. The details of the soil classification system and boring records presenting the classifications are presented in Appendix A.

B.3 Moisture Content and Dry Unit Weight

The in-situ moisture content of selected bulk, SPT, and Ring samples was determined by oven drying in general accordance with ASTM D 2216. Selected California Ring samples were trimmed flush in the metal rings and wet weight was measured. After drying, the dry weight of each sample was measured, volume and weight of the metal containers was measured, and moisture content and dry density were calculated in general accordance with ASTM D 2216 and D 2937. Results of these tests are presented on the boring records in Appendix A.

B.4 Atterberg Limits

Characterization of the fine-grained fractions of soils was evaluated using the Atterberg Limits. This test includes Liquid Limit and Plastic Limit tests to determine the Plasticity Index in accordance with ASTM D 4318. Results of these tests are presented on the boring records in Appendix A, are summarized in Table B-1, and are plotted on a Plasticity Chart in this Appendix.

B.5 Grain Size Distribution and Percent Passing No. 200 Sieve:

Representative samples were dried, weighed, soaked in water until individual soil particles were separated, and then washed on the No. 200 sieve. The percentage of fines (soil passing No. 200 sieve) was determined for selected samples in accordance with ASTM D 1140. For selected samples, the washed material retained on No. 200 sieve was shaken through a standard stack of sieves in accordance with ASTM D 422 to determine the grain size distribution. The results of grain size distribution tests are plotted in this appendix. The relative proportion (or percentage) by dry weight of gravel (retained on No. 4 sieve), sand (passing No. 4 and retained on No. 200 sieve), and fines (passing No. 200 sieve) are listed on the boring records in Appendix A.

B.6 Triaxial Compression Test

Unconsolidated Undrained Triaxial tests were performed on selected samples in accordance with ASTM D 4767 and ASTM D 2850. The test results are summarized in this appendix.

B.7 One-Dimensional Consolidation

The consolidation characteristics of representative soil samples under incremental loading were evaluated by performing one-dimensional consolidation in general accordance with

ASTM D 2435, using a floating ring consolidometer and dead weight system. Results of the tests are presented in this appendix.

B.8 Expansion Index

The expansion potential of the site soils was estimated using the Expansion Index Test in accordance with ASTM D 4829. The results of this test presented in this appendix.

B.9 Soil Corrosivity

Tests were performed in order to determine corrosion potential of site soils on concrete and ferrous metals. Corrosivity testing included minimum electrical resistivity and soil pH (Caltrans method 643), water-soluble chlorides (Caltrans Test Method 422), and water-soluble sulfates (ASTM D 516). The test results are summarized presented in this appendix.

B.10 List of Attached Figures

The following tables and figures are attached and complete this appendix:

List of Tables

Table B-1	Summary of Laboratory Test Results

List of Figures

Figures B-1A through B-1D	Atterberg Limits Test Results
Figures B-2A through B-2B	Consolidation Test Results
Figures B-3A through B-3B	Triaxial Compression Test Results
Figures B-4A through B-4B	Expansion Index Test Results
Figures B-5	Corrosion Test Results

Boring No.	Sample No.	Sample Depth (ft)	Sample Type[1]	USCS Group Symbol	Geologic Unit[2]	SPT N_{60} (blows/ft)	Undrained Shear Strength, Su (ksf)			Moisture Content (%)	Dry Unit Weight (pcf)	Total Unit Weight (pcf)	Atterberg Limits			Grain Size Distribution (%) by dry weight				Other Test
							Pocket Penetro-meter	Miniature Vane	Unconfined Compres-sion Test				LL	PL	PI	Gravel	Sand	Fines	Clay μ(2(	
B-1	B-1	0-5	BULK	CH																
	R-2	5	MC	CL		6	0.8													
	R-3	10	SPT	CH		6	1.5			8.0	103									
	SH-4	15	SH	CL			1.5						46	15	31					
	R-5	20	MC	CH		41	2.0			13.0	119									
	S-6	25	SPT	SC		25														
	R-7	30	MC	SW-SM		52														
B-2	B-1	0-5	BULK	CH												0.2	17.8	82		
	R-2	5	MC	CH		16	3.0			32.0	87		54	21	33					
	S-3	10	SPT	CH		7	1.5													
	SH-4	15	SH	CH			1.5		1.83											
	R-5	20	MC	CL		9	0.8			34.0	87									
	S-6	25	SPT	CL		8	2.3													
	R-7	30	MC	SW-SC		20				11.0	121									
	S-8	35	SPT	SW		18														
	R-9	40	MC	ML		18	2.8			25.0	101									
	S-10	45	SPT	ML		22	1.0													
	R-11	50	MC	ML		25	4.3			31	93									
	S-12	55	SPT	ML		20	0.8													
	R-13	60	MC	ML		17	3.0			29.0	95									
	S-14	70	SPT	CL		16	0.8													
	R-15	80	MC	SW		19														
B-3	B-1	0-5	BULK	CH																
	R-2	5	MC	CL		6	1.5			27.0	86									
	S-3	10	SPT	CH		7	1.5													
	SH-4	15	SH	CH			1.3													
	R-5	20	MC	CH		13	2.5			21	106									
	S-6	25	SPT	CL		17														
	R-7	30	MC	SW-SM		50/6"														
B-4	B-1	0-5	BULK	CL																
	R-2	5	MC	CL		6				26	91									
	R-3	10	MC	CL		11														
	R-4	15	MC	CH		8				29	94		56	22	34					
	S-5	20	SPT	CH		4														
	R-6	25	MC	CL		10				15	116									
	S-7	30	SPT	SC		27														
	R-8	35	MC	SM		34														
	S-9	40	SPT	SP		50/6"														
	R-10	45	MC	SP		50/6"				11.3	129									
	S-11	50	SPT	SP		31														
B-5	B-1	0-5	BULK	CL																
	R-2	5	MC	CL		13														
	S-3	10	SPT	CH		3							66	26	40	0	4	96		
	R-4	15	MC	CH		8			2.3											UU
	S-5	20	SPT	CH		7														
	R-6	25	MC	CL		8														
	S-7	30	SPT	CL		21														

GROUP DELTA CONSULTANTS. INC.
32 Mauchly, Suite B
Irvine, California 92618
Voice: (949) 450-2100 Fax: (949) 450-2108
www.GroupDelta.com

TABLE B-1: Summary of Laboratory Results

Project: Bristol Commons

Location: 3900 S. Bristol Street, Santa Ana

Number: IR737

ATTERBERG LIMITS

ASTM D-4318 / AASHTO T-89 / CTM 204

Project Name:	*Related - Bristol Commons*	Tested By :	*Eric Y.*	Date:	*01/18/21*
Project No. :	*IR737*	Data Input By:	*Eric Y.*	Date:	*01/19/21*
Boring No.:	*B-1*	Checked By:	*Mike G.*	Date:	
Sample No. :	*SH-4*	Depth (ft.) :	*15*		
Initial Moisture:		Container No.:	*AL-2*		
Description.:	*Brown Sandy Clay - CL*				

	PLASTIC LIMIT		LIQUID LIMIT			
TEST NO.	1	2	1	2	3	4
Number of Blows [N]			32	25	18	
Container No.	1	2	3	4	5	
Wet Wt. of Soil + Cont. (gm.)	32.30	31.98	37.91	39.92	40.76	
Dry Wt. of Soil + Cont. (gm.)	31.41	31.10	34.17	35.66	36.20	
Wt. of Container (gm.)	25.51	25.29	25.79	26.35	26.65	
Moisture Content (%) [Wn]	15.08	15.15	44.63	45.76	47.75	

LIQUID LIMIT	**46**
PLASTIC LIMIT	**15**
PLASTICITY INDEX	**31**

PI at "A" - Line = 0.73(LL-20) = **19.0**

One - Point Liquid Limit Calculation $LL=Wn(N/25)^{0.121}$

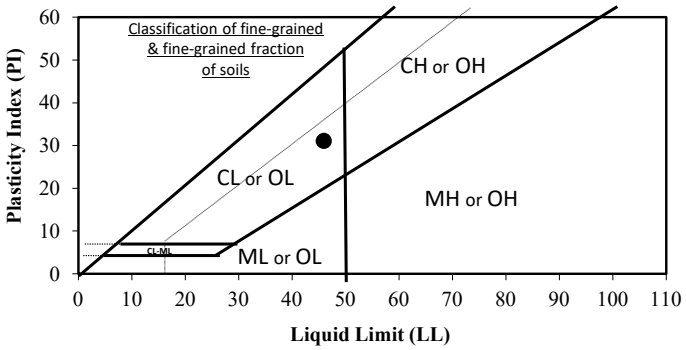

PROCEDURES USED

- ☐ Wet Preparation
  - Multipoint Wet Preparation
- ☒ Dry Preparation
  - Multipoint Dry Preparation
- ☒ Procedure A
  - Multipoint Test
- ☐ Procedure B
  - One-point Test

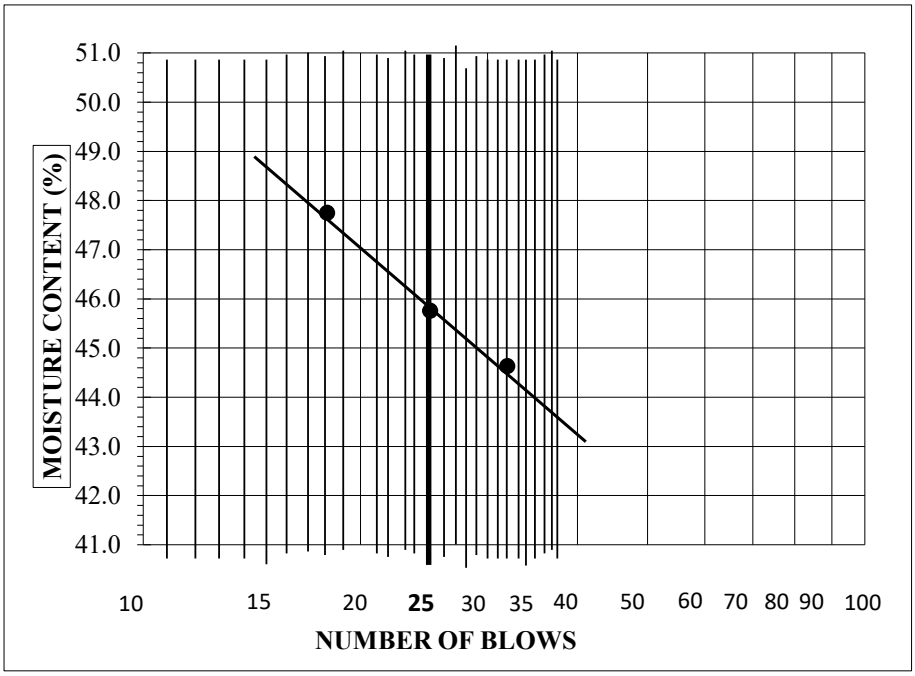

GROUP DELTA CONSULTANTS
1320 South Simpson Circle
Anaheim, CA 92806
(714) 660-7500 office
(714) 660-7550 fax

Figure: B-1A

ATTERBERG LIMITS

ASTM D-4318 / AASHTO T-89 / CTM 204

Project Name:	*Related - Bristol Commons*	Tested By :	*Eric Y.*	Date:	*01/18/21*
Project No. :	*IR737*	Data Input By:	*Eric Y.*	Date:	*01/19/21*
Boring No.:	*B-2*	Checked By:	*Mike G.*	Date:	
Sample No. :	*R-2*	Depth (ft.) :	*5*		
Initial Moisture:		Container No.:	*AL-3*		
Description.:	*Olive Brown Fat Clay with Sand - CH*				

	PLASTIC LIMIT		LIQUID LIMIT			
TEST NO.	1	2	1	2	3	4
Number of Blows [N]			33	24	17	
Container No.	6	7	8	9	10	
Wet Wt. of Soil + Cont. (gm.)	32.90	33.14	37.32	39.25	38.75	
Dry Wt. of Soil + Cont. (gm.)	31.70	31.92	32.92	34.66	33.88	
Wt. of Container (gm.)	26.00	26.13	24.52	26.22	25.23	
Moisture Content (%) [Wn]	21.05	21.07	52.38	54.38	56.30	

LIQUID LIMIT	**54**
PLASTIC LIMIT	**21**
PLASTICITY INDEX	**33**

PI at "A" - Line = 0.73(LL-20) = **24.8**

One - Point Liquid Limit Calculation $LL=Wn(N/25)^{0.121}$

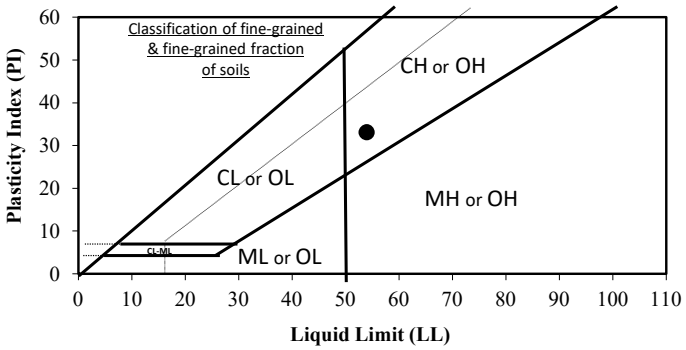

PROCEDURES USED

- ☐ Wet Preparation
  - Multipoint Wet Preparation
- ☒ Dry Preparation
  - Multipoint Dry Preparation
- ☒ Procedure A
  - Multipoint Test
- ☐ Procedure B
  - One-point Test

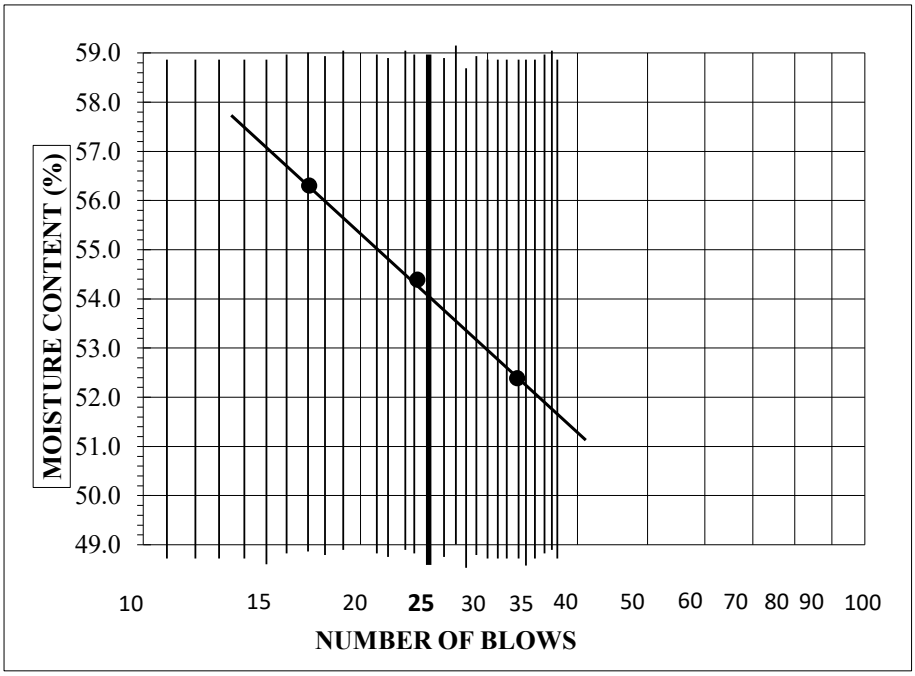

GROUP DELTA CONSULTANTS
1320 South Simpson Circle
Anaheim, CA 92806
(714) 660-7500 office
(714) 660-7550 fax

Figure: B-1B

ATTERBERG LIMITS

ASTM D-4318 / AASHTO T-89 / CTM 204

Project Name:	*Bristol Commons*	Tested By :	*Eric Y.*	Date:	*02/21/20*
Project No. :	*IR737*	Data Input By:	*Eric Y.*	Date:	*02/24/20*
Boring No.:	*B-4*	Checked By:	*Mike G.*	Date:	
Sample No. :	*R-4*	Depth (ft.) :	*15*		
Initial Moisture:		Container No.:	*AL-3*		
Description.:	*Olive Brown Fat Clay with Sand - CH*				

	PLASTIC LIMIT		LIQUID LIMIT			
TEST NO.	1	2	1	2	3	4
Number of Blows [N]			34	26	17	
Container No.	11	12	13	14	15	
Wet Wt. of Soil + Cont. (gm.)	31.59	32.37	39.03	37.65	38.74	
Dry Wt. of Soil + Cont. (gm.)	30.35	31.12	34.84	33.10	33.96	
Wt. of Container (gm.)	24.71	25.44	27.08	24.92	25.69	
Moisture Content (%) [Wn]	21.99	22.01	53.99	55.62	57.80	

LIQUID LIMIT	**56**
PLASTIC LIMIT	**22**
PLASTICITY INDEX	**34**

PI at "A" - Line = 0.73(LL-20) = **26.3**

One - Point Liquid Limit Calculation $LL=Wn(N/25)^{0.121}$

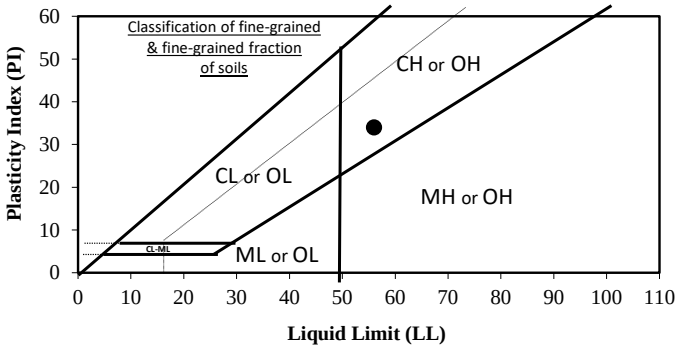

PROCEDURES USED

- ☐ Wet Preparation
  - Multipoint Wet Preparation
- ☒ Dry Preparation
  - Multipoint Dry Preparation
- ☒ Procedure A
  - Multipoint Test
- ☐ Procedure B
  - One-point Test

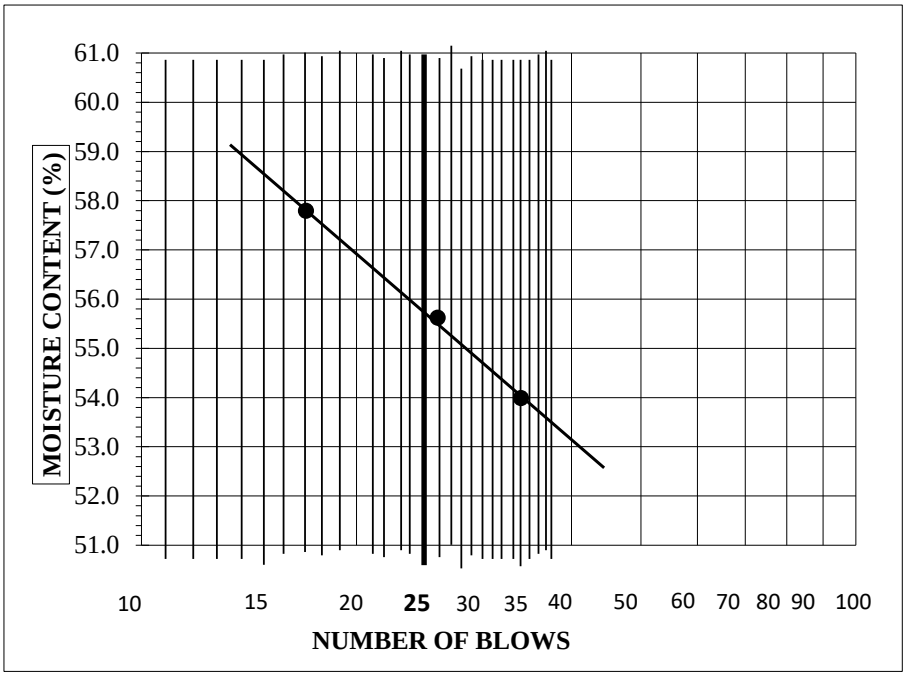

GROUP DELTA CONSULTANTS
1320 South Simpson Circle
Anaheim, CA 92806
(714) 660-7500 office
(714) 660-7550 fax

Figure: B-1C

ATTERBERG LIMITS

ASTM D-4318 / AASHTO T-89 / CTM 204

Project Name:	*Bristol Commons*	Tested By :	*Eric Y.*	Date:	*02/21/20*
Project No. :	*IR737*	Data Input By:	*Eric Y.*	Date:	*02/24/20*
Boring No.:	*B-5*	Checked By:	*Mike G.*	Date:	
Sample No. :	*S-3*	Depth (ft.) :	*10*		
Initial Moisture:		Container No.:	*AL-4*		
Description.:	*Very Dark Grayish Brown Fat Clay - CH*				

	PLASTIC LIMIT		LIQUID LIMIT			
TEST NO.	1	2	1	2	3	4
Number of Blows [N]			32	25	18	
Container No.	16	17	18	19	20	
Wet Wt. of Soil + Cont. (gm.)	31.81	31.37	38.97	39.81	38.57	
Dry Wt. of Soil + Cont. (gm.)	30.42	29.98	34.18	34.58	32.92	
Wt. of Container (gm.)	25.04	24.61	26.72	26.61	24.54	
Moisture Content (%) [Wn]	25.84	25.88	64.21	65.62	67.42	

LIQUID LIMIT	**66**
PLASTIC LIMIT	**26**
PLASTICITY INDEX	**40**

PI at "A" - Line = 0.73(LL-20) = **33.6**

One - Point Liquid Limit Calculation $LL=Wn(N/25)^{0.121}$

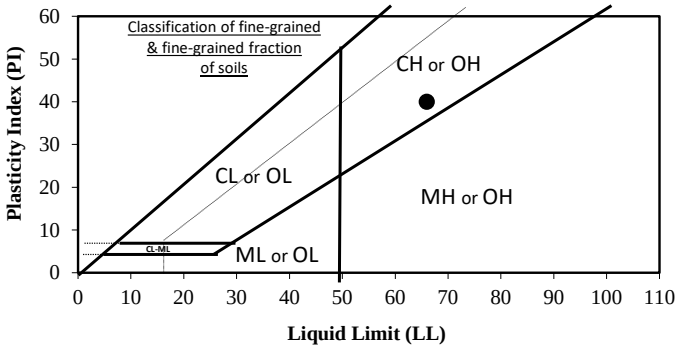

PROCEDURES USED

- ☐ Wet Preparation
  - Multipoint Wet Preparation
- ☒ Dry Preparation
  - Multipoint Dry Preparation
- ☒ Procedure A
  - Multipoint Test
- ☐ Procedure B
  - One-point Test

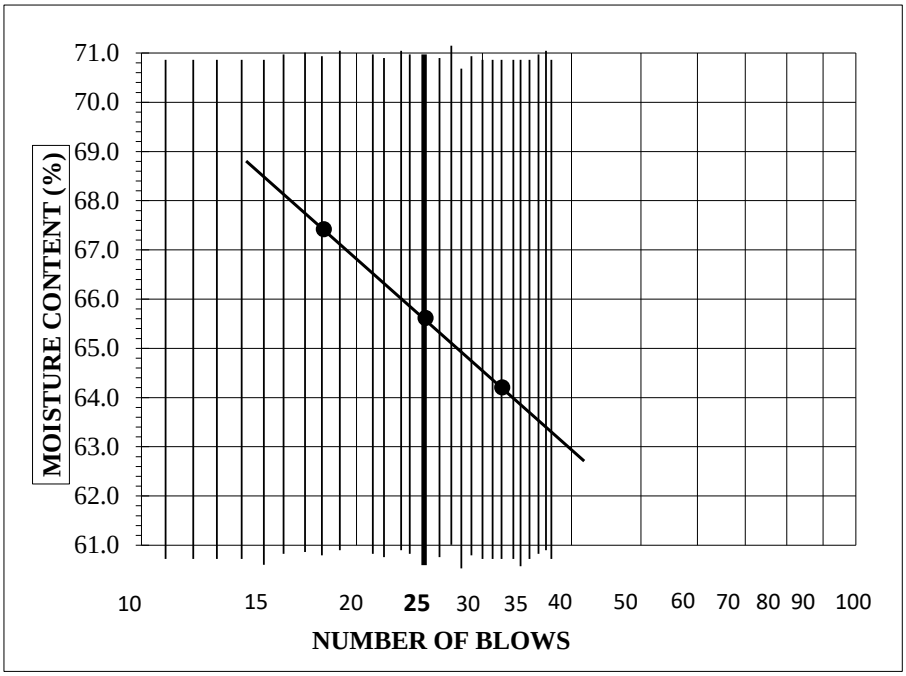

GROUP DELTA CONSULTANTS
1320 South Simpson Circle
Anaheim, CA 92806
(714) 660-7500 office
(714) 660-7550 fax

Figure: B-1D

CONSOLIDATION TEST RESULTS
ASTM D-2435

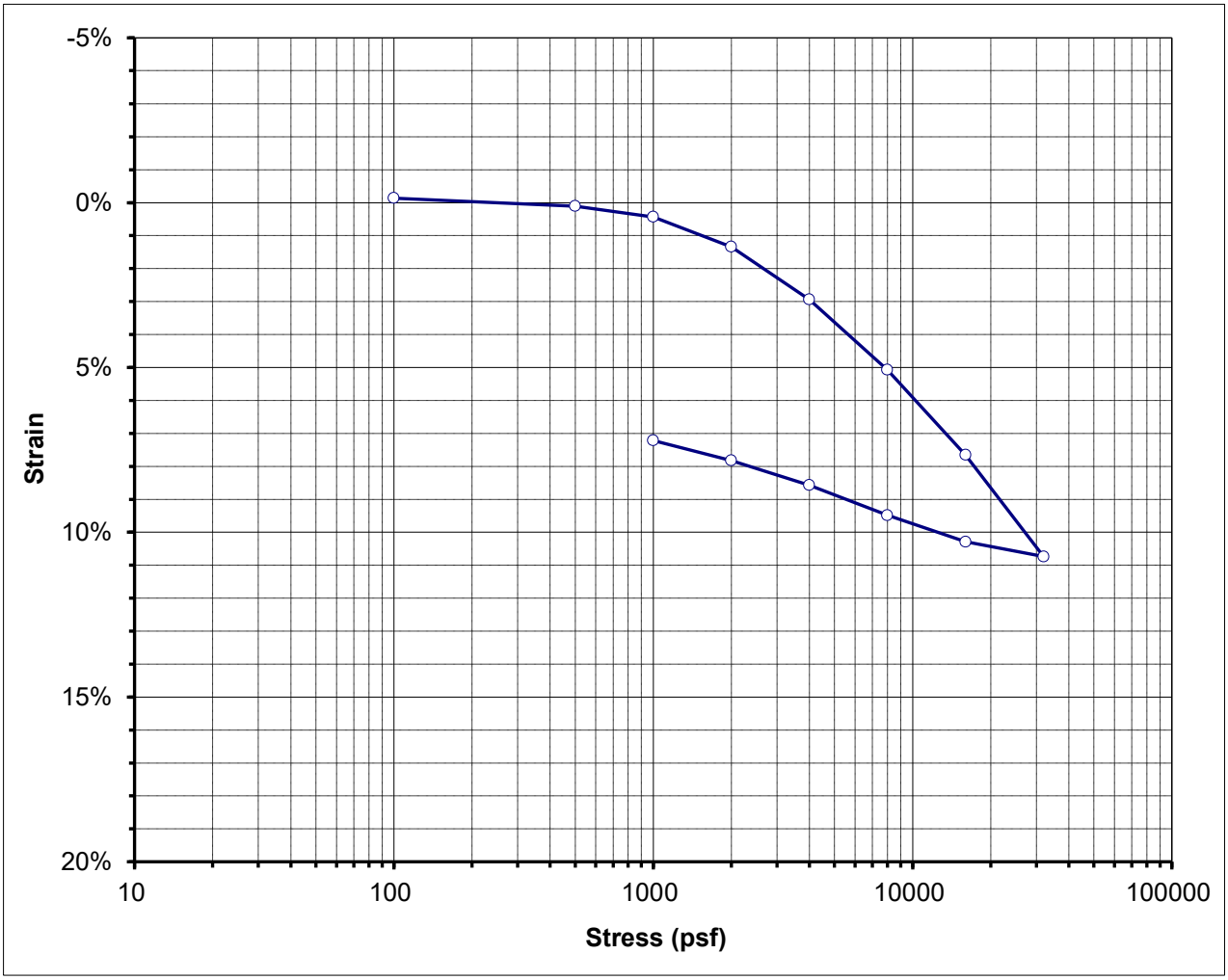

Boring No.	B-1	Sample Depth	15'
Sample No.	SH-4	USCS	CL

BEFORE TEST

Initial Moisture Content:	21.09%	
Initial Dry Unit Wt:	107.7	pcf
Initial Total Unit Wt.:	130.4	pcf
Initial Void Ratio:	0.6111	
Initial Degree of Saturation:	96.0%	

AFTER TEST

Final Moisture Content:	17.81%	
Final Dry Unit Wt:	116.1	pcf
Final Total Unit Wt.:	136.7	pcf
Final Void Ratio:	0.4955	
Final Degree of Saturation:	100.0%	

Water Added at: 100 psf

ATTERBERG LIMITS					
LL=	46	PL=	15	PI=	31

Assumed Specific Gravity of Solids, Gs: 2.78

PRESSURE (psf)	SAMPLE STRAIN	VOID RATIO
100	-0.14%	0.613
500	0.10%	0.609
1000	0.43%	0.604
2000	1.34%	0.589
4000	2.95%	0.564
8000	5.08%	0.529
16000	7.66%	0.488
32000	10.74%	0.438
16000	10.29%	0.445
8000	9.49%	0.458
4000	8.58%	0.473
2000	7.83%	0.485
1000	7.22%	0.495

PROJECT NUMBER:	PROJECT NAME:	FIGURE NO.
IR737	Related - Bristol Commons	B-2A

GROUP DELTA

CONSOLIDATION TEST RESULTS
ASTM D-2435

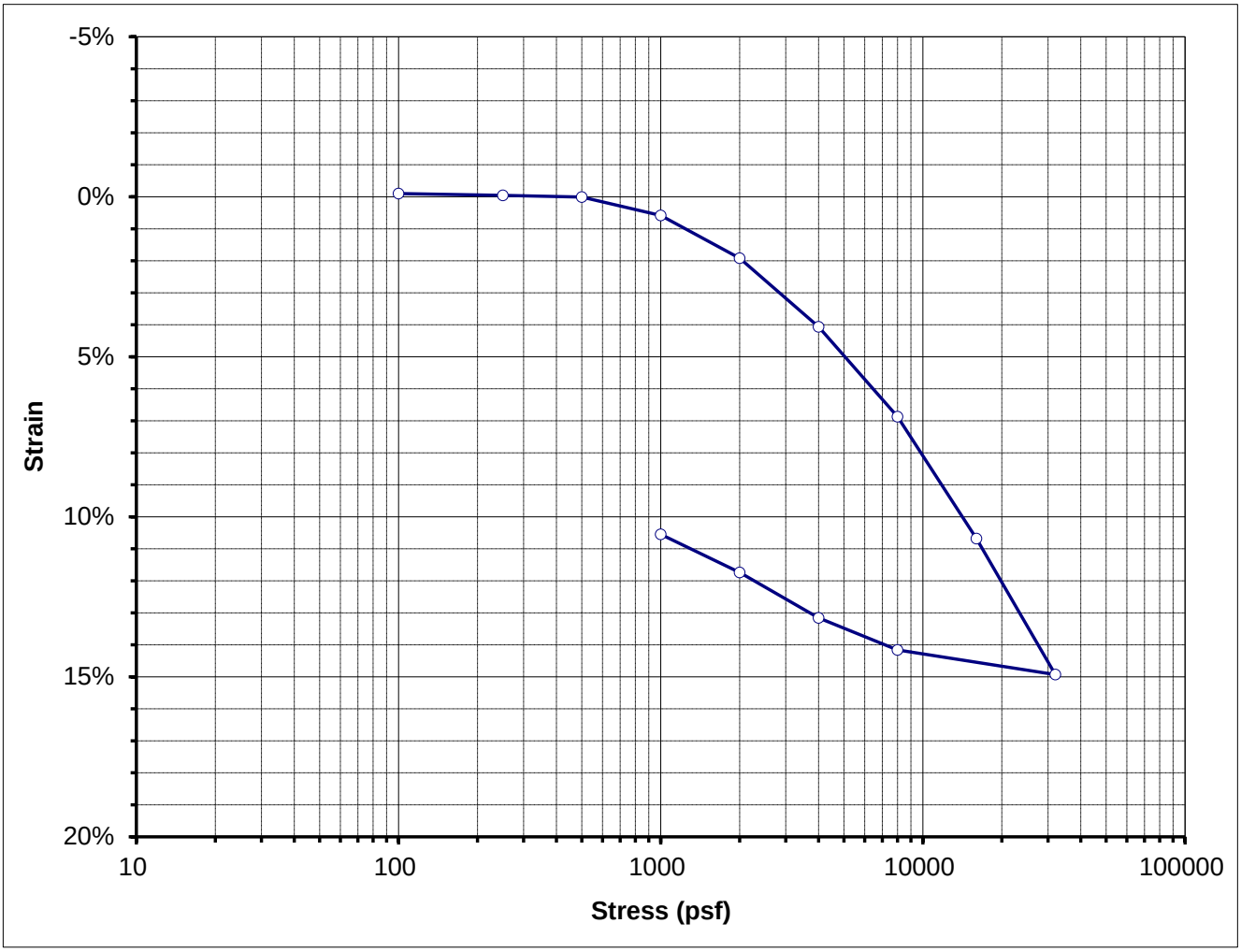

Boring No.	B-4	Sample Depth	15'
Sample No.	R-4	USCS	CH

BEFORE TEST

Initial Moisture Content:	30.29%	
Initial Dry Unit Wt:	93.6	pcf
Initial Total Unit Wt.:	121.9	pcf
Initial Void Ratio:	0.8917	
Initial Degree of Saturation:	96.3%	

AFTER TEST

Final Moisture Content:	24.64%	
Final Dry Unit Wt:	104.2	pcf
Final Total Unit Wt.:	129.9	pcf
Final Void Ratio:	0.6987	
Final Degree of Saturation:	100.0%	

Water Added at: 100 psf

ATTERBERG LIMITS					
LL=	56	PL=	22	PI=	34

Assumed Specific Gravity of Solids, Gs: 2.84

PRESSURE (psf)	SAMPLE STRAIN	VOID RATIO
100	-0.10%	0.8936
250	-0.04%	0.8926
500	0.01%	0.8915
1000	0.58%	0.8807
2000	1.92%	0.8554
4000	4.06%	0.8149
8000	6.87%	0.7617
16000	10.68%	0.6897
32000	14.93%	0.6093
8000	14.16%	0.6239
4000	13.16%	0.6428
2000	11.74%	0.6696
1000	10.55%	0.6922

PROJECT NUMBER: IR737	PROJECT NAME: Bristol Commons	FIGURE NO. B-2B	GROUP DELTA

AP Engineering and Testing, Inc.
DBE|MBE|SBE
2607 Pomona Boulevard | Pomona, CA 91768
t. 909.869.6316 | f. 909.869.6318 | www.aplaboratory.com

UNCONSOLIDATED UNDRAINED TRIAXIAL TEST (UU,Q)
ASTM D 2850

Client Name:	Group Delta		Tested By:	ST	Date: 01/20/21
Project Name:	Related-Bristol Commons		Checked by:	AP	Date: 01/22/21
Project No.:	IR737				
Boring No.:	B-2				
Sample No.:	SH-4	Depth (feet): 15			
Soil Description	Clay		Sample Type:	Mod. Cal.	

Sample Diameter (inch):	2.870	Wet Unit Weight (pcf):	119.4
Sample Height (inch):	6.008	Dry Unit Weight (pcf):	90.5
Sample Weight (g):	1219.62	Moisture Content (%):	31.9
Wt. of Wet Soil+Container (g):	143.00	Void Ratio for Gs=2.7:	0.86
Wt. of Dry Soil+Container (g):	120.86	% Saturation:	100.1
Wt. of Container (g):	51.50		

TEST DATA

Cell Pressure (ksf):	1.80
Back Pressure (ksf):	0.0
Tested Total Confining Pressure (ksf):	1.80
Shear Rate (%/min):	0.3
Maximum Deviator Stress (ksf):	1.83
Ultimate Deviator Stress (ksf):	1.83
Ultimate Undrained Shear Strength (ksf):	0.92
Axial Strain @ Maximum Stress (%)	15.81



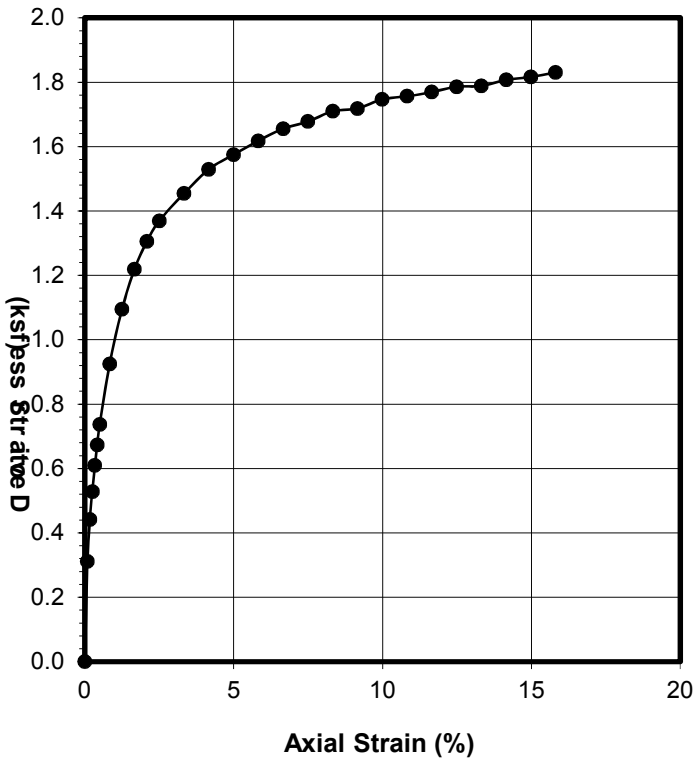

Load (lbs)	Def. (inch)	Area (sq.in)	Deviator Stress (ksf)	Axial Strain (%)
0	0.000	6.47	0.00	0.00
14	0.005	6.48	0.31	0.08
20	0.010	6.48	0.44	0.17
24	0.015	6.49	0.53	0.25
28	0.020	6.49	0.61	0.33
30	0.025	6.50	0.67	0.42
33	0.030	6.50	0.74	0.50
42	0.050	6.53	0.92	0.83
50	0.075	6.55	1.09	1.25
56	0.100	6.58	1.22	1.66
60	0.125	6.61	1.31	2.08
63	0.150	6.64	1.37	2.50
68	0.200	6.69	1.45	3.33
72	0.250	6.75	1.53	4.16
75	0.300	6.81	1.58	4.99
77	0.350	6.87	1.62	5.83
80	0.400	6.93	1.66	6.66
82	0.450	6.99	1.68	7.49
84	0.500	7.06	1.71	8.32
85	0.550	7.12	1.72	9.15
87	0.600	7.19	1.75	9.99
89	0.650	7.26	1.76	10.82
90	0.700	7.32	1.77	11.65
92	0.750	7.39	1.79	12.48
93	0.800	7.46	1.79	13.32
95	0.850	7.54	1.81	14.15
96	0.900	7.61	1.82	14.98
98	0.950	7.69	1.83	15.81

Figure: B-3A

AP Engineering and Testing, Inc.
DBE|MBE|SBE
2607 Pomona Boulevard | Pomona, CA 91768
t. 909.869.6316 | f. 909.869.6318 | www.aplaboratory.com

UNCONSOLIDATED UNDRAINED TRIAXIAL TEST (UU,Q)
ASTM D 2850

Client Name:	Group Delta		Tested By:	ST	Date: 02/26/20
Project Name:	Bristol Commons		Checked by:	AP	Date: 02/27/20
Project No.:	IR737				
Boring No.:	B-5				
Sample No.:	R-4	Depth (feet): 15			
Soil Description	Fat Clay		Sample Type:	Mod. Cal.	

Sample Diameter (inch):	2.415	Wet Unit Weight (pcf):	117.8
Sample Height (inch):	6.017	Dry Unit Weight (pcf):	87.6
Sample Weight (g):	852.60	Moisture Content (%):	34.5
Wt. of Wet Soil+Container (g):	994.15	Void Ratio for Gs=2.7:	0.92
Wt. of Dry Soil+Container (g):	776.00	% Saturation:	100.8
Wt. of Container (g):	143.21		

TEST DATA

Cell Pressure (ksf):	1.80
Back Pressure (ksf):	0.0
Tested Total Confining Pressure (ksf):	1.80
Shear Rate (%/min):	0.3
Maximum Deviator Stress (ksf):	2.32
Ultimate Deviator Stress (ksf):	2.30
Ultimate Undrained Shear Strength (ksf):	1.15
Axial Strain @ Maximum Stress (%)	16.62



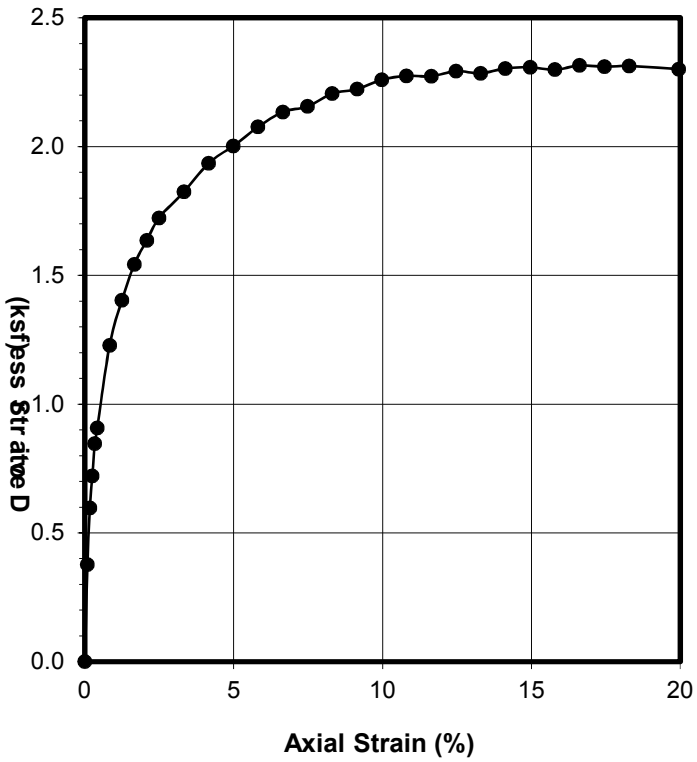

Load (lbs)	Def. (inch)	Area (sq.in)	Deviator Stress (ksf)	Axial Strain (%)
0	0.000	4.58	0.00	0.00
12	0.005	4.58	0.38	0.08
19	0.010	4.59	0.60	0.17
23	0.015	4.59	0.72	0.25
27	0.020	4.59	0.85	0.33
29	0.025	4.60	0.91	0.42
39	0.050	4.62	1.23	0.83
45	0.075	4.64	1.40	1.25
50	0.100	4.66	1.54	1.66
53	0.125	4.68	1.64	2.08
56	0.150	4.70	1.72	2.49
60	0.200	4.74	1.82	3.32
64	0.250	4.78	1.93	4.15
67	0.300	4.82	2.00	4.99
70	0.350	4.86	2.08	5.82
73	0.400	4.91	2.13	6.65
74	0.450	4.95	2.16	7.48
77	0.500	4.99	2.21	8.31
78	0.550	5.04	2.22	9.14
80	0.600	5.09	2.26	9.97
81	0.650	5.13	2.27	10.80
82	0.700	5.18	2.27	11.63
83	0.750	5.23	2.29	12.46
84	0.800	5.28	2.28	13.29
85	0.850	5.33	2.30	14.13
86	0.900	5.38	2.31	14.96
87	0.950	5.44	2.30	15.79
88	1.000	5.49	2.32	16.62
89	1.050	5.55	2.31	17.45
90	1.100	5.60	2.31	18.28
91	1.200	5.72	2.30	19.94

Figure: B-3B

GROUP DELTA

EXPANSION INDEX OF SOIL

ASTM D-4829-10 / UBC 29-2

Lab Number: SO5951

Project Name	: Related - Bristol Commons	**Sampled By :**	YW	**Date :**	1/5/2021
Project No.	: IR737	**Prepared By :**	Eric Y.	**Date :**	1/14/2021
Boring No.	: B-1	**Tested By :**	Eric Y.	**Date :**	1/15/2021
Sample No.	: Bulk-1	**Calculated By :**	Eric Y.	**Date :**	1/19/2021
Depth (ft.)	: 0 - 5	**Checked By :**	Mike G.	**Date :**	
Description	: Dark Gray Fat Clay with Sand				

Sample Preparation

Weight of Total Soil	3570.40	**Weight of Soil Retained on No. 4 Sieve**	15.80	**% Passing No. 4 Sieve**	99.56

Trail	1	2	3	4	**Tested**	**M & D After Test**	
Container No.	SB-3					**Container No.**	
Weight of Wet Soil + Container (gm)	782.28					**Wet Soil+Cont.+Ring**	
Weight of Dry Soil + Container (gm)	710.95					**Dry Soil+Cont.+Ring**	
Weight of Container (gm)	232.96					**Wt. of Container**	
Moisture Content (%)	14.92				14.92	**Moisture Content**	
Weight of Wet Soil + Ring (gm)	560.11						
Weight of Ring (gm) No. 3.0	200.90				200.90		
Weight of Wet Soil (gm)	359.21						
Wet Density of Soil (pcf)	108.35					**Wet Density (pcf)**	
Dry Density of Soil (pcf)	94.28					**Dry Density (pcf)**	
Precent Saturation of Soil $S_{(Meas.)}$	51.14				51.14	**(%) Saturation**	

Loading Machine No.		**3**		
Date	**Reading Time**	**Elapsed Time**	**Dial Reading**	**Expansion**
01/15/21	11:10:00	0:10:00		0.0000
01/15/21				
01/15/21	11:20:00	**0:00:00**	**0.3000**	**0.0000**
Add Distilled Water to Sample				
01/15/21	12:20:00	1:00:00	0.3996	0.0996
01/15/21	13:20:00	2:00:00	0.4122	0.1122
01/15/21	14:20:00	3:00:00	0.4135	0.1135
01/15/21	15:20:00	4:00:00	0.4142	0.1142
01/18/21	8:20:00	69 hrs.	0.4183	0.1183
01/18/21	9:20:00	70 hrs.	0.4183	0.1183
01/18/21	10:20:00	71 hrs.	0.4183	0.1183
01/18/21	11:20:00	72 hrs.	0.4183	0.1183

Remark :

1. *Screen sample through* **No. 4** *Sieve*
2. *Sample should be compacted into a metal ring of the Degree of Saturation of* **50 +/- 2% (48 - 52).**
3. *Inundated sample in distilled water to 24 h, or until the rate of expansion > (0.0002 in./h), no less than 3 h.*

Volume of Mold (ft^3)	0.00731	Specific Gravity	2.70
Rammer Weight (lb.)	5.0	**Blows/Layer**	15
Vertical Confining Pressure		1.0 (lbf/in^2) / 6.9 (kPa)	

$$(\%)\ S = \frac{S.G. \times W \times Dd}{Wd \times S.G. - Dd}$$

S.G.=Specific Gravity, **W**=Water Content
Dd=Dry Soil Density, **Wd**=Unit Wt. of Water

$$E.I._{(meas)} = \frac{\text{Change in High}}{\text{Initial Thickness}} \times 1000 = 118.30$$

$$\text{Expansion Index}_{(50)} = EI_{(meas.)} - (50 - S_{(meas.)}) \times \frac{65 + EI_{(meas.)}}{220 - S_{(meas.)}}$$

120	**High**

Expansion Index	Potential Expansion
0 - 20	*Very Low*
21 - 50	*Low*
51 - 90	*Medium*
91 - 130	*High*
> 130	*Very High*

Figure: B-4A

GROUP DELTA

EXPANSION INDEX OF SOIL

ASTM D-4829-10 / UBC 29-2

Lab Number: SO5652

Project Name	: Bristol Commons		**Sampled By :**		**Date :**
Project No.	: IR737		**Prepared By :**	Eric Y.	**Date :** 2/20/2020
Boring No.	: B-5		**Tested By :**	Eric Y.	**Date :** 2/21/2020
Sample No.	: B-1		**Calculated By :**	Eric Y.	**Date :** 2/24/2020
Depth (ft.)	: 0 - 5		**Checked By :**	Mike G.	**Date :**
Description	: Olive Gray Lean Clay with Sand				

Sample Preparation

Weight of Total Soil	3278.60	**Weight of Soil Retained on No. 4 Sieve**	53.60	**% Passing No. 4 Sieve**	98.37

Trail	1	2	3	4	Tested	**M & D After Test**	
Container No.	SB-1					**Container No.**	
Weight of Wet Soil + Container (gm)	781.94					**Wet Soil+Cont.+Ring**	
Weight of Dry Soil + Container (gm)	720.72					**Dry Soil+Cont.+Ring**	
Weight of Container (gm)	234.56					**Wt. of Container**	
Moisture Content (%)	12.59				12.59	**Moisture Content**	
Weight of Wet Soil + Ring (gm)	582.54						
Weight of Ring (gm) No. 1.0	202.34				202.34		
Weight of Wet Soil (gm)	380.20						
Wet Density of Soil (pcf)	114.68					**Wet Density (pcf)**	
Dry Density of Soil (pcf)	101.86					**Dry Density (pcf)**	
Precent Saturation of Soil $S_{(Meas.)}$	51.92				51.92	**(%) Saturation**	

Loading Machine No.			1	
Date	**Reading Time**	**Elapsed Time**	**Dial Reading**	**Expansion**
02/21/20	11:00:00	0:10:00		0.0000
02/21/20				
02/21/20	11:10:00	**0:00:00**	**0.5000**	**0.0000**
Add Distilled Water to Sample				
02/21/20	12:10:00	1:00:00	0.5750	0.0750
02/21/20	13:10:00	2:00:00	0.5790	0.0790
02/21/20	14:10:00	3:00:00	0.5800	0.0800
02/21/20	15:10:00	4:00:00	0.5800	0.0800
02/21/20	16:10:00	5:00:00	0.5810	0.0810
02/24/20	8:10:00	69 Hrs.	0.5830	0.0830
02/24/20	9:10:00	70 Hrs.	0.5830	0.0830
02/24/20	11:10:00	72 Hrs.	0.5830	0.0830

Remark :

1. *Screen sample through* **No. 4** *Sieve*
2. *Sample should be compacted into a metal ring of the Degree of Saturation of* **50 +/- 2% (48 - 52).**
3. *Inundated sample in distilled water to 24 h, or until the rate of expansion > (0.0002 in./h), no less than 3 h.*

Volume of Mold (ft^3)	0.00731	Specific Gravity	2.70
Rammer Weight (lb.)	5.0	**Blows/Layer**	15
Vertical Confining Pressure		1.0 (lbf/in^2) / 6.9 (kPa)	

$$(\%)\ S = \frac{S.G. \times W \times Dd}{Wd \times S.G. - Dd}$$

S.G.=Specific Gravity, **W**=Water Content
Dd=Dry Soil Density, **Wd**=Unit Wt. of Water

$$E.I._{(meas)} = \frac{\text{Change in High}}{\text{Initial Thickness}} \times 1000 = 83.00$$

$$\text{Expansion Index}_{(50)} = EI_{(meas.)} - (50 - S_{(meas.)}) \times \frac{65 + EI_{(meas.)}}{220 - S_{(meas.)}}$$

85	**Medium**

Expansion Index	Potential Expansion
0 - 20	*Very Low*
21 - 50	*Low*
51 - 90	*Medium*
91 - 130	*High*
> 130	*Very High*

Figure: B-4B

AP Engineering and Testing, Inc.
DBE|MBE|SBE
2607 Pomona Boulevard | Pomona, CA 91768
t. 909.869.6316 | f. 909.869.6318 | www.aplaboratory.com

CORROSION TEST RESULTS

Client Name: Group Delta
Project Name: Bristol Commons
Project No.: IR737

AP Job No.: 20-0243
Date: 02/26/20

Boring No.	Sample No.	Depth (feet)	Soil Description	Minimum Resistivity (ohm-cm)	pH	Sulfate Content (ppm)	Chloride Content (ppm)
B-4	B-1	0-5	Fat Clay	371	7.7	10274	377

NOTES: Resistivity Test and pH: California Test Method 643
Sulfate Content : California Test Method 417
Chloride Content : California Test Method 422
ND = Not Detectable
NA = Not Sufficient Sample
NR = Not Requested

Figure: B-5

ATTACHMENT G

CEQA IMPACT REPORT

Bristol Commons

PREPARED FOR:	City of Santa Ana
PREPARED BY:	Fuscoe Engineering, Inc.
DATE:	October 2022

The following are the responses to the CEQA Impact Assessment.

1. Violate any water quality standards or waste discharge requirements or otherwise substantially degrade surface or groundwater quality?
   Impact Assessment: The proposed project will not violate any water quality standards due to the runoff being thoroughly treated for expected pollutants via biotreatment BMPs. The proposed project will not violate waste discharge requirements as it will be incorporating sewer treatment structures for discharge locations of applicable uses. Surface runoff will be treated by the proposed BMPs and thus will not violate water quality standards. Groundwater quality will not be affected by the project because infiltration is not recommended by the geotechnical engineer and so it is not proposed.
2. Substantially decrease groundwater supplies or interfere substantially with groundwater recharge such that the project may impede sustainable groundwater management of the basin.
   Impact Assessment: The Orange County groundwater basin is managed sustainably by Orange County Water District (OCWD) where they monitor the groundwater quality and quantity. OCWD is collaborated with in cases of proposed designs where the groundwater would be impacted, though infiltration is infeasible for the property and so is not proposed. The project will not negatively impact the groundwater basin as there are no recharge facilities within the project footprint.
3. Substantially alter the existing drainage pattern of the site or area, including through the alteration of the course of a stream or river or through the addition of impervious surfaces, in a manner which would:
   i. Result in a substantial erosion or siltation on- or off-site;
      Impact Assessment: The proposed project maintains a very similar drainage pattern as the existing condition and incorporates biotreatment BMPs which will prevent excess sediment from exiting the site. The project area will also ultimately be stabilized so that erosion will not occur. The project does discharge into hydromodification susceptible waterbodies, although the 2-year storm event comparison between the existing condition and the proposed condition result favorably in that the peak flows are decreased by 2% in the proposed condition. The existing condition 2-year, 24-hour storm event peak flowrate is 56.57 cfs and the proposed condition has a peak flowrate of 55.45 cfs.
   ii. Substantially increase the rate or amount of surface runoff in a manner which would result in flooding on- or offsite;
      Impact Assessment: Please refer to the Drainage Report.

iii. Create or contribute runoff water which would exceed the capacity of existing or planned stormwater drainage systems or provide substantial additional sources of polluted runoff; or

Impact Assessment: The project proposed biotreatment BMPs for each drainage area that meet or exceed the design capture flowrate requirements for sufficient pollutant removal, so the runoff of the site will have a significant decrease in pollutant wash off than in the existing condition. The drainage pattern of the proposed project maintains very similar patterns to the existing condition and therefore will not exceed the capacity of the existing storm drain system. Onsite storm drain lines will be designed to meet sufficient flowrate capacity as well. Please refer to the project hydrology study that existing and proposed storm drain infrastructure have adequate capacity to convey stormwater runoff from the project site.

iv. Impede or redirect flood flows?

Impact Assessment: The proposed project maintains a very similar drainage pattern as the existing condition and flood flows will not be neither impeded nor redirected.

4. In flood hazard, tsunami, or seiche zones, risk release of pollutants due to project inundation?
   Impact Assessment: Please refer to the Drainage Report.
5. Conflict with or obstruct implementation of a water quality control plan or sustainable groundwater management plan?
   Impact Assessment: The proposed project will be in compliance with all water quality requirements under the governing MS4 Permit Order No. R8-2009-0030 as amended by R8-2010-0062. OCWD has a plan in place to ensure sustainable groundwater management via their plan to (1) protect and enhance groundwater quality, (2) protect and increase the sustainable yield of the basin in a cost-effective manner, and (3) increase the efficiency of District operations. The project will not impact that plan due to there being no recharge facilities proposed.

ATTACHMENT H

2-YR, 24-HR HYDROLOGY CALCULATIONS

```
**************************************************************************
            RATIONAL METHOD HYDROLOGY COMPUTER PROGRAM PACKAGE
           (Reference: 1986 ORANGE COUNTY HYDROLOGY CRITERION)
         (c) Copyright 1983-2014 Advanced Engineering Software (aes)
             Ver. 21.0  Release Date: 06/01/2014  License ID 1355

                          Analysis prepared by:

                            Fuscoe Engineering
                             16795 Von Karman
                                Suite 100
                             Irvine, CA 92606

 ************************ DESCRIPTION OF STUDY *************************
* RELATED BRISTOL                                                      *
* 2-YEAR STORM EVENT                                                   *
* EXISTING CONDITION                                                   *
 **************************************************************************

  FILE NAME: BRIS2EX.DAT
  TIME/DATE OF STUDY: 09:39 02/02/2023
==========================================================================
  USER SPECIFIED HYDROLOGY AND HYDRAULIC MODEL INFORMATION:
==========================================================================
                    --*TIME-OF-CONCENTRATION MODEL*--

  USER SPECIFIED STORM EVENT(YEAR) =    2.00
  SPECIFIED MINIMUM PIPE SIZE(INCH) =   8.00
  SPECIFIED PERCENT OF GRADIENTS(DECIMAL) TO USE FOR FRICTION SLOPE = 0.90
  *DATA BANK RAINFALL USED*
  *ANTECEDENT MOISTURE CONDITION (AMC) I ASSUMED FOR RATIONAL METHOD*

  *USER-DEFINED STREET-SECTIONS FOR COUPLED PIPEFLOW AND STREETFLOW MODEL*
     HALF-  CROWN TO   STREET-CROSSFALL:   CURB  GUTTER-GEOMETRIES:  MANNING
     WIDTH  CROSSFALL  IN-  / OUT-/PARK-  HEIGHT  WIDTH  LIP   HIKE  FACTOR
NO.   (FT)     (FT)    SIDE / SIDE/ WAY    (FT)    (FT)  (FT)  (FT)    (n)
===  =====  =========  =================  ======  ===== ====== ===== =======
  1   30.0     20.0    0.018/0.018/0.020   0.67    2.00 0.0313 0.167 0.0150

  GLOBAL STREET FLOW-DEPTH CONSTRAINTS:
    1. Relative Flow-Depth =  0.00 FEET
       as (Maximum Allowable Street Flow Depth) - (Top-of-Curb)
    2. (Depth)*(Velocity) Constraint =  6.0 (FT*FT/S)
  *SIZE PIPE WITH A FLOW CAPACITY GREATER THAN
   OR EQUAL TO THE UPSTREAM TRIBUTARY PIPE.*
  *USER-SPECIFIED MINIMUM TOPOGRAPHIC SLOPE ADJUSTMENT NOT SELECTED

+--------------------------------------------------------------------------+
| AREA 'A'                                                                 |
|                                                                          |
|                                                                          |
+--------------------------------------------------------------------------+

**************************************************************************
  FLOW PROCESS FROM NODE     10.00 TO NODE     11.00 IS CODE =  21
--------------------------------------------------------------------------
  >>>>>RATIONAL METHOD INITIAL SUBAREA ANALYSIS<<<<<
  >>USE TIME-OF-CONCENTRATION NOMOGRAPH FOR INITIAL SUBAREA<<
==========================================================================
  INITIAL SUBAREA FLOW-LENGTH(FEET) =   186.00
  ELEVATION DATA: UPSTREAM(FEET) =     36.00  DOWNSTREAM(FEET) =     33.40
```

```
  Tc = K*[(LENGTH** 3.00)/(ELEVATION CHANGE)]**0.20
  SUBAREA ANALYSIS USED MINIMUM Tc(MIN.) =    5.775
  *   2 YEAR RAINFALL INTENSITY(INCH/HR) =  2.084
  SUBAREA Tc AND LOSS RATE DATA(AMC  I ):
   DEVELOPMENT TYPE/      SCS SOIL   AREA      Fp         Ap     SCS   Tc
       LAND USE            GROUP   (ACRES)  (INCH/HR)  (DECIMAL)  CN  (MIN.)
  COMMERCIAL                 C        1.12      0.25     0.100    50    5.78
  SUBAREA AVERAGE PERVIOUS LOSS RATE, Fp(INCH/HR) =  0.25
  SUBAREA AVERAGE PERVIOUS AREA FRACTION, Ap =  0.100
  SUBAREA RUNOFF(CFS) =      2.08
  TOTAL AREA(ACRES) =      1.12   PEAK FLOW RATE(CFS) =      2.08

****************************************************************************
  FLOW PROCESS FROM NODE     11.00 TO NODE     12.00 IS CODE =  41
----------------------------------------------------------------------------
  >>>>>COMPUTE PIPE-FLOW TRAVEL TIME THRU SUBAREA<<<<<
  >>>>>USING USER-SPECIFIED PIPESIZE (EXISTING ELEMENT)<<<<<
============================================================================
  ELEVATION DATA: UPSTREAM(FEET) =    31.40  DOWNSTREAM(FEET) =    30.60
  FLOW LENGTH(FEET) =   157.00   MANNING'S N =  0.013
  DEPTH OF FLOW IN  12.0 INCH PIPE IS   8.6 INCHES
  PIPE-FLOW VELOCITY(FEET/SEC.) =   3.45
  GIVEN PIPE DIAMETER(INCH) =  12.00    NUMBER OF PIPES =   1
  PIPE-FLOW(CFS) =       2.08
  PIPE TRAVEL TIME(MIN.) =   0.76    Tc(MIN.) =    6.53
  LONGEST FLOWPATH FROM NODE     10.00 TO NODE     12.00 =     343.00 FEET.

****************************************************************************
  FLOW PROCESS FROM NODE     12.00 TO NODE     12.00 IS CODE =  81
----------------------------------------------------------------------------
  >>>>>ADDITION OF SUBAREA TO MAINLINE PEAK FLOW<<<<<
============================================================================
  MAINLINE Tc(MIN.) =    6.53
  *   2 YEAR RAINFALL INTENSITY(INCH/HR) =  1.941
  SUBAREA LOSS RATE DATA(AMC  I ):
   DEVELOPMENT TYPE/      SCS SOIL   AREA      Fp         Ap     SCS
       LAND USE            GROUP   (ACRES)  (INCH/HR)  (DECIMAL)  CN
  COMMERCIAL                 C        0.41      0.25     0.100    50
  SUBAREA AVERAGE PERVIOUS LOSS RATE, Fp(INCH/HR) =  0.25
  SUBAREA AVERAGE PERVIOUS AREA FRACTION, Ap =  0.100
  SUBAREA AREA(ACRES) =    0.41      SUBAREA RUNOFF(CFS) =    0.71
  EFFECTIVE AREA(ACRES) =      1.53   AREA-AVERAGED Fm(INCH/HR) =  0.03
  AREA-AVERAGED Fp(INCH/HR) =  0.25  AREA-AVERAGED Ap =  0.10
  TOTAL AREA(ACRES) =        1.5       PEAK FLOW RATE(CFS) =       2.64

****************************************************************************
  FLOW PROCESS FROM NODE     12.00 TO NODE     13.00 IS CODE =  41
----------------------------------------------------------------------------
  >>>>>COMPUTE PIPE-FLOW TRAVEL TIME THRU SUBAREA<<<<<
  >>>>>USING USER-SPECIFIED PIPESIZE (EXISTING ELEMENT)<<<<<
============================================================================
  ELEVATION DATA: UPSTREAM(FEET) =    30.60  DOWNSTREAM(FEET) =    29.70
  FLOW LENGTH(FEET) =   176.00   MANNING'S N =  0.013
  ASSUME FULL-FLOWING PIPELINE
  PIPE-FLOW VELOCITY(FEET/SEC.) =   3.36
  PIPE FLOW VELOCITY = (TOTAL FLOW)/(PIPE CROSS SECTION AREA)
  GIVEN PIPE DIAMETER(INCH) =  12.00    NUMBER OF PIPES =   1
  PIPE-FLOW(CFS) =       2.64
  PIPE TRAVEL TIME(MIN.) =   0.87    Tc(MIN.) =    7.41
  LONGEST FLOWPATH FROM NODE     10.00 TO NODE     13.00 =     519.00 FEET.
```

```
****************************************************************************
  FLOW PROCESS FROM NODE     13.00 TO NODE     13.00 IS CODE =   1
----------------------------------------------------------------------------
  >>>>>DESIGNATE INDEPENDENT STREAM FOR CONFLUENCE<<<<<
============================================================================
  TOTAL NUMBER OF STREAMS =  2
  CONFLUENCE VALUES USED FOR INDEPENDENT STREAM  1 ARE:
  TIME OF CONCENTRATION(MIN.) =    7.41
  RAINFALL INTENSITY(INCH/HR) =   1.81
  AREA-AVERAGED Fm(INCH/HR) =  0.03
  AREA-AVERAGED Fp(INCH/HR) =  0.25
  AREA-AVERAGED Ap =  0.10
  EFFECTIVE STREAM AREA(ACRES) =       1.53
  TOTAL STREAM AREA(ACRES) =       1.53
  PEAK FLOW RATE(CFS) AT CONFLUENCE =       2.64

****************************************************************************
  FLOW PROCESS FROM NODE     14.00 TO NODE     15.00 IS CODE =  21
----------------------------------------------------------------------------
  >>>>>RATIONAL METHOD INITIAL SUBAREA ANALYSIS<<<<<
  >>USE TIME-OF-CONCENTRATION NOMOGRAPH FOR INITIAL SUBAREA<<
============================================================================
  INITIAL SUBAREA FLOW-LENGTH(FEET) =   309.00
  ELEVATION DATA: UPSTREAM(FEET) =     34.80  DOWNSTREAM(FEET) =     34.60

  Tc = K*[(LENGTH** 3.00)/(ELEVATION CHANGE)]**0.20
  SUBAREA ANALYSIS USED MINIMUM Tc(MIN.) =   13.081
  *   2 YEAR RAINFALL INTENSITY(INCH/HR) =  1.303
  SUBAREA Tc AND LOSS RATE DATA(AMC  I ):
   DEVELOPMENT TYPE/      SCS SOIL   AREA      Fp          Ap     SCS   Tc
       LAND USE            GROUP   (ACRES)  (INCH/HR)  (DECIMAL)  CN  (MIN.)
  COMMERCIAL                 C        0.39      0.25     0.100    50   13.08
  SUBAREA AVERAGE PERVIOUS LOSS RATE, Fp(INCH/HR) =  0.25
  SUBAREA AVERAGE PERVIOUS AREA FRACTION, Ap =  0.100
  SUBAREA RUNOFF(CFS) =      0.45
  TOTAL AREA(ACRES) =      0.39   PEAK FLOW RATE(CFS) =      0.45

****************************************************************************
  FLOW PROCESS FROM NODE     15.00 TO NODE     13.00 IS CODE =  91
----------------------------------------------------------------------------
  >>>>>COMPUTE "V" GUTTER FLOW TRAVEL TIME THRU SUBAREA<<<<<
============================================================================
  UPSTREAM NODE ELEVATION(FEET) =     34.60
  DOWNSTREAM NODE ELEVATION(FEET) =     33.60
  CHANNEL LENGTH THRU SUBAREA(FEET) =   207.00
  "V" GUTTER WIDTH(FEET) =   5.00   GUTTER HIKE(FEET) =  0.050
  PAVEMENT LIP(FEET) =  0.010   MANNING'S N = .0150
  PAVEMENT CROSSFALL(DECIMAL NOTATION) = 0.02000
  MAXIMUM DEPTH(FEET) =  10.00
  *   2 YEAR RAINFALL INTENSITY(INCH/HR) =  1.157
  SUBAREA LOSS RATE DATA(AMC  I ):
   DEVELOPMENT TYPE/      SCS SOIL   AREA      Fp          Ap     SCS
       LAND USE            GROUP   (ACRES)  (INCH/HR)  (DECIMAL)  CN
  COMMERCIAL                 C        0.33      0.25     0.100    50
  SUBAREA AVERAGE PERVIOUS LOSS RATE, Fp(INCH/HR) =  0.25
  SUBAREA AVERAGE PERVIOUS AREA FRACTION, Ap =  0.100
  TRAVEL TIME COMPUTED USING ESTIMATED FLOW(CFS) =      0.62
  TRAVEL TIME THRU SUBAREA BASED ON VELOCITY(FEET/SEC.) =   1.14
  AVERAGE FLOW DEPTH(FEET) =   0.11   FLOOD WIDTH(FEET) =    9.91
  "V" GUTTER FLOW TRAVEL TIME(MIN.) =   3.03   Tc(MIN.) =   16.11
  SUBAREA AREA(ACRES) =    0.33       SUBAREA RUNOFF(CFS) =    0.34
  EFFECTIVE AREA(ACRES) =    0.72     AREA-AVERAGED Fm(INCH/HR) =   0.03
```

```
  AREA-AVERAGED Fp(INCH/HR) =   0.25  AREA-AVERAGED Ap =   0.10
  TOTAL AREA(ACRES) =        0.7         PEAK FLOW RATE(CFS) =       0.73

  END OF SUBAREA "V" GUTTER HYDRAULICS:
  DEPTH(FEET) =  0.12   FLOOD WIDTH(FEET) =   10.64
  FLOW VELOCITY(FEET/SEC.) =   1.19   DEPTH*VELOCITY(FT*FT/SEC) =   0.14
  LONGEST FLOWPATH FROM NODE     14.00 TO NODE     13.00 =     516.00 FEET.

****************************************************************************
  FLOW PROCESS FROM NODE     13.00 TO NODE     13.00 IS CODE =   1
----------------------------------------------------------------------------
  >>>>>DESIGNATE INDEPENDENT STREAM FOR CONFLUENCE<<<<<
  >>>>>AND COMPUTE VARIOUS CONFLUENCED STREAM VALUES<<<<<
============================================================================
  TOTAL NUMBER OF STREAMS =  2
  CONFLUENCE VALUES USED FOR INDEPENDENT STREAM  2 ARE:
  TIME OF CONCENTRATION(MIN.) =   16.11
  RAINFALL INTENSITY(INCH/HR) =   1.16
  AREA-AVERAGED Fm(INCH/HR) =  0.03
  AREA-AVERAGED Fp(INCH/HR) =  0.25
  AREA-AVERAGED Ap =  0.10
  EFFECTIVE STREAM AREA(ACRES) =       0.72
  TOTAL STREAM AREA(ACRES) =       0.72
  PEAK FLOW RATE(CFS) AT CONFLUENCE =       0.73

  ** CONFLUENCE DATA **
   STREAM       Q      Tc   Intensity   Fp(Fm)     Ap     Ae     HEADWATER
   NUMBER     (CFS)  (MIN.) (INCH/HR) (INCH/HR)         (ACRES)    NODE
      1        2.64    7.41    1.807  0.25( 0.03) 0.10       1.5      10.00
      2        0.73   16.11    1.157  0.25( 0.03) 0.10       0.7      14.00

  RAINFALL INTENSITY AND TIME OF CONCENTRATION RATIO
  CONFLUENCE FORMULA USED FOR  2 STREAMS.

  ** PEAK FLOW RATE TABLE **
   STREAM       Q      Tc   Intensity   Fp(Fm)     Ap     Ae     HEADWATER
   NUMBER     (CFS)  (MIN.) (INCH/HR) (INCH/HR)         (ACRES)    NODE
      1        3.17    7.41    1.807  0.25( 0.03) 0.10       1.9      10.00
      2        2.41   16.11    1.157  0.25( 0.03) 0.10       2.2      14.00

  COMPUTED CONFLUENCE ESTIMATES ARE AS FOLLOWS:
  PEAK FLOW RATE(CFS) =       3.17    Tc(MIN.) =     7.41
  EFFECTIVE AREA(ACRES) =       1.86   AREA-AVERAGED Fm(INCH/HR) =  0.03
  AREA-AVERAGED Fp(INCH/HR) =  0.25  AREA-AVERAGED Ap =  0.10
  TOTAL AREA(ACRES) =        2.2
  LONGEST FLOWPATH FROM NODE     10.00 TO NODE     13.00 =     519.00 FEET.

****************************************************************************
  FLOW PROCESS FROM NODE     13.00 TO NODE     13.00 IS CODE =  81
----------------------------------------------------------------------------
  >>>>>ADDITION OF SUBAREA TO MAINLINE PEAK FLOW<<<<<
============================================================================
  MAINLINE Tc(MIN.) =    7.41
  *   2 YEAR RAINFALL INTENSITY(INCH/HR) =  1.807
  SUBAREA LOSS RATE DATA(AMC  I ):
   DEVELOPMENT TYPE/      SCS SOIL   AREA      Fp         Ap     SCS
       LAND USE            GROUP   (ACRES)  (INCH/HR)  (DECIMAL)  CN
  COMMERCIAL                 C        1.25      0.25     0.100    50
  SUBAREA AVERAGE PERVIOUS LOSS RATE, Fp(INCH/HR) =  0.25
  SUBAREA AVERAGE PERVIOUS AREA FRACTION, Ap =  0.100
  SUBAREA AREA(ACRES) =    1.25      SUBAREA RUNOFF(CFS) =    2.00
  EFFECTIVE AREA(ACRES) =      3.11   AREA-AVERAGED Fm(INCH/HR) =  0.03
```

```
  AREA-AVERAGED Fp(INCH/HR) =  0.25  AREA-AVERAGED Ap =  0.10
  TOTAL AREA(ACRES) =        3.5       PEAK FLOW RATE(CFS) =       4.99

****************************************************************************
  FLOW PROCESS FROM NODE     13.00 TO NODE     16.00 IS CODE =  41
----------------------------------------------------------------------------
  >>>>>COMPUTE PIPE-FLOW TRAVEL TIME THRU SUBAREA<<<<<
  >>>>>USING USER-SPECIFIED PIPESIZE (EXISTING ELEMENT)<<<<<
============================================================================
  ELEVATION DATA: UPSTREAM(FEET) =    29.70  DOWNSTREAM(FEET) =    28.50
  FLOW LENGTH(FEET) =   252.00   MANNING'S N =  0.013
  ASSUME FULL-FLOWING PIPELINE
  PIPE-FLOW VELOCITY(FEET/SEC.) =   6.35
  PIPE FLOW VELOCITY = (TOTAL FLOW)/(PIPE CROSS SECTION AREA)
  GIVEN PIPE DIAMETER(INCH) =  12.00    NUMBER OF PIPES =   1
  PIPE-FLOW(CFS) =       4.99
  PIPE TRAVEL TIME(MIN.) =   0.66    Tc(MIN.) =    8.07
  LONGEST FLOWPATH FROM NODE     10.00 TO NODE     16.00 =     771.00 FEET.

****************************************************************************
  FLOW PROCESS FROM NODE     16.00 TO NODE     16.00 IS CODE =  81
----------------------------------------------------------------------------
  >>>>>ADDITION OF SUBAREA TO MAINLINE PEAK FLOW<<<<<
============================================================================
  MAINLINE Tc(MIN.) =    8.07
  *   2 YEAR RAINFALL INTENSITY(INCH/HR) =  1.720
  SUBAREA LOSS RATE DATA(AMC  I ):
   DEVELOPMENT TYPE/      SCS SOIL   AREA      Fp         Ap     SCS
       LAND USE            GROUP   (ACRES)  (INCH/HR)  (DECIMAL)  CN
  COMMERCIAL                 C        0.37      0.25     0.100    50
  SUBAREA AVERAGE PERVIOUS LOSS RATE, Fp(INCH/HR) =  0.25
  SUBAREA AVERAGE PERVIOUS AREA FRACTION, Ap =  0.100
  SUBAREA AREA(ACRES) =    0.37      SUBAREA RUNOFF(CFS) =    0.56
  EFFECTIVE AREA(ACRES) =      3.48   AREA-AVERAGED Fm(INCH/HR) =  0.03
  AREA-AVERAGED Fp(INCH/HR) =  0.25  AREA-AVERAGED Ap =  0.10
  TOTAL AREA(ACRES) =        3.9       PEAK FLOW RATE(CFS) =       5.31

****************************************************************************
  FLOW PROCESS FROM NODE     16.00 TO NODE     17.00 IS CODE =  41
----------------------------------------------------------------------------
  >>>>>COMPUTE PIPE-FLOW TRAVEL TIME THRU SUBAREA<<<<<
  >>>>>USING USER-SPECIFIED PIPESIZE (EXISTING ELEMENT)<<<<<
============================================================================
  ELEVATION DATA: UPSTREAM(FEET) =    28.50  DOWNSTREAM(FEET) =    28.20
  FLOW LENGTH(FEET) =    49.00   MANNING'S N =  0.013
  ASSUME FULL-FLOWING PIPELINE
  PIPE-FLOW VELOCITY(FEET/SEC.) =   6.76
  PIPE FLOW VELOCITY = (TOTAL FLOW)/(PIPE CROSS SECTION AREA)
  GIVEN PIPE DIAMETER(INCH) =  12.00    NUMBER OF PIPES =   1
  PIPE-FLOW(CFS) =       5.31
  PIPE TRAVEL TIME(MIN.) =   0.12    Tc(MIN.) =    8.19
  LONGEST FLOWPATH FROM NODE     10.00 TO NODE     17.00 =     820.00 FEET.

+--------------------------------------------------------------------------+
| AREA 'B'                                                                 |
|                                                                          |
|                                                                          |
+--------------------------------------------------------------------------+

****************************************************************************
  FLOW PROCESS FROM NODE     20.00 TO NODE     21.00 IS CODE =  21
----------------------------------------------------------------------------
```

```
  >>>>>RATIONAL METHOD INITIAL SUBAREA ANALYSIS<<<<<
  >>USE TIME-OF-CONCENTRATION NOMOGRAPH FOR INITIAL SUBAREA<<
==============================================================================
  INITIAL SUBAREA FLOW-LENGTH(FEET) =   330.00
  ELEVATION DATA: UPSTREAM(FEET) =     35.30  DOWNSTREAM(FEET) =     33.70

  Tc = K*[(LENGTH** 3.00)/(ELEVATION CHANGE)]**0.20
  SUBAREA ANALYSIS USED MINIMUM Tc(MIN.) =    8.978
  *   2 YEAR RAINFALL INTENSITY(INCH/HR) =  1.618
  SUBAREA Tc AND LOSS RATE DATA(AMC  I ):
   DEVELOPMENT TYPE/      SCS SOIL   AREA      Fp         Ap     SCS   Tc
       LAND USE            GROUP   (ACRES)  (INCH/HR)  (DECIMAL)  CN  (MIN.)
  COMMERCIAL                 C        0.94      0.25     0.100    50    8.98
  SUBAREA AVERAGE PERVIOUS LOSS RATE, Fp(INCH/HR) =  0.25
  SUBAREA AVERAGE PERVIOUS AREA FRACTION, Ap =  0.100
  SUBAREA RUNOFF(CFS) =      1.35
  TOTAL AREA(ACRES) =      0.94   PEAK FLOW RATE(CFS) =      1.35

******************************************************************************
  FLOW PROCESS FROM NODE     21.00 TO NODE     22.00 IS CODE =  41
------------------------------------------------------------------------------
  >>>>>COMPUTE PIPE-FLOW TRAVEL TIME THRU SUBAREA<<<<<
  >>>>>USING USER-SPECIFIED PIPESIZE (EXISTING ELEMENT)<<<<<
==============================================================================
  ELEVATION DATA: UPSTREAM(FEET) =    31.80  DOWNSTREAM(FEET) =    31.70
  FLOW LENGTH(FEET) =    63.00   MANNING'S N =  0.013
  ASSUME FULL-FLOWING PIPELINE
  PIPE-FLOW VELOCITY(FEET/SEC.) =   1.72
  PIPE FLOW VELOCITY = (TOTAL FLOW)/(PIPE CROSS SECTION AREA)
  GIVEN PIPE DIAMETER(INCH) =  12.00    NUMBER OF PIPES =   1
  PIPE-FLOW(CFS) =       1.35
  PIPE TRAVEL TIME(MIN.) =   0.61    Tc(MIN.) =    9.59
  LONGEST FLOWPATH FROM NODE     20.00 TO NODE     22.00 =     393.00 FEET.

******************************************************************************
  FLOW PROCESS FROM NODE     22.00 TO NODE     22.00 IS CODE =  81
------------------------------------------------------------------------------
  >>>>>ADDITION OF SUBAREA TO MAINLINE PEAK FLOW<<<<<
==============================================================================
  MAINLINE Tc(MIN.) =    9.59
  *   2 YEAR RAINFALL INTENSITY(INCH/HR) =  1.558
  SUBAREA LOSS RATE DATA(AMC  I ):
   DEVELOPMENT TYPE/      SCS SOIL   AREA      Fp         Ap     SCS
       LAND USE            GROUP   (ACRES)  (INCH/HR)  (DECIMAL)  CN
  COMMERCIAL                 C        0.29      0.25     0.100    50
  SUBAREA AVERAGE PERVIOUS LOSS RATE, Fp(INCH/HR) =  0.25
  SUBAREA AVERAGE PERVIOUS AREA FRACTION, Ap =  0.100
  SUBAREA AREA(ACRES) =    0.29      SUBAREA RUNOFF(CFS) =    0.40
  EFFECTIVE AREA(ACRES) =      1.23   AREA-AVERAGED Fm(INCH/HR) =  0.03
  AREA-AVERAGED Fp(INCH/HR) =  0.25  AREA-AVERAGED Ap =  0.10
  TOTAL AREA(ACRES) =        1.2       PEAK FLOW RATE(CFS) =       1.70

******************************************************************************
  FLOW PROCESS FROM NODE     22.00 TO NODE     23.00 IS CODE =  41
------------------------------------------------------------------------------
  >>>>>COMPUTE PIPE-FLOW TRAVEL TIME THRU SUBAREA<<<<<
  >>>>>USING USER-SPECIFIED PIPESIZE (EXISTING ELEMENT)<<<<<
==============================================================================
  ELEVATION DATA: UPSTREAM(FEET) =    31.70  DOWNSTREAM(FEET) =    31.60
  FLOW LENGTH(FEET) =    47.00   MANNING'S N =  0.013
  ASSUME FULL-FLOWING PIPELINE
  PIPE-FLOW VELOCITY(FEET/SEC.) =   2.16
```

```
  PIPE FLOW VELOCITY = (TOTAL FLOW)/(PIPE CROSS SECTION AREA)
  GIVEN PIPE DIAMETER(INCH) =  12.00    NUMBER OF PIPES =   1
  PIPE-FLOW(CFS) =       1.70
  PIPE TRAVEL TIME(MIN.) =   0.36    Tc(MIN.) =    9.95
  LONGEST FLOWPATH FROM NODE     20.00 TO NODE     23.00 =     440.00 FEET.

****************************************************************************
  FLOW PROCESS FROM NODE     23.00 TO NODE     23.00 IS CODE =  81
----------------------------------------------------------------------------
  >>>>>ADDITION OF SUBAREA TO MAINLINE PEAK FLOW<<<<<
============================================================================
  MAINLINE Tc(MIN.) =    9.95
  *   2 YEAR RAINFALL INTENSITY(INCH/HR) =  1.525
  SUBAREA LOSS RATE DATA(AMC  I ):
   DEVELOPMENT TYPE/      SCS SOIL   AREA      Fp         Ap     SCS
        LAND USE            GROUP   (ACRES)  (INCH/HR)  (DECIMAL)  CN
  COMMERCIAL                  C        2.17      0.25     0.100    50
  SUBAREA AVERAGE PERVIOUS LOSS RATE, Fp(INCH/HR) =  0.25
  SUBAREA AVERAGE PERVIOUS AREA FRACTION, Ap =  0.100
  SUBAREA AREA(ACRES) =    2.17      SUBAREA RUNOFF(CFS) =    2.93
  EFFECTIVE AREA(ACRES) =      3.40   AREA-AVERAGED Fm(INCH/HR) =  0.03
  AREA-AVERAGED Fp(INCH/HR) =  0.25  AREA-AVERAGED Ap =  0.10
  TOTAL AREA(ACRES) =        3.4       PEAK FLOW RATE(CFS) =       4.59

****************************************************************************
  FLOW PROCESS FROM NODE     23.00 TO NODE     24.00 IS CODE =  41
----------------------------------------------------------------------------
  >>>>>COMPUTE PIPE-FLOW TRAVEL TIME THRU SUBAREA<<<<<
  >>>>>USING USER-SPECIFIED PIPESIZE (EXISTING ELEMENT)<<<<<
============================================================================
  ELEVATION DATA: UPSTREAM(FEET) =    31.60  DOWNSTREAM(FEET) =    31.00
  FLOW LENGTH(FEET) =   136.00   MANNING'S N =  0.013
  ASSUME FULL-FLOWING PIPELINE
  PIPE-FLOW VELOCITY(FEET/SEC.) =   5.84
  PIPE FLOW VELOCITY = (TOTAL FLOW)/(PIPE CROSS SECTION AREA)
  GIVEN PIPE DIAMETER(INCH) =  12.00    NUMBER OF PIPES =   1
  PIPE-FLOW(CFS) =       4.59
  PIPE TRAVEL TIME(MIN.) =   0.39    Tc(MIN.) =   10.34
  LONGEST FLOWPATH FROM NODE     20.00 TO NODE     24.00 =     576.00 FEET.

****************************************************************************
  FLOW PROCESS FROM NODE     24.00 TO NODE     24.00 IS CODE =  81
----------------------------------------------------------------------------
  >>>>>ADDITION OF SUBAREA TO MAINLINE PEAK FLOW<<<<<
============================================================================
  MAINLINE Tc(MIN.) =   10.34
  *   2 YEAR RAINFALL INTENSITY(INCH/HR) =  1.492
  SUBAREA LOSS RATE DATA(AMC  I ):
   DEVELOPMENT TYPE/      SCS SOIL   AREA      Fp         Ap     SCS
        LAND USE            GROUP   (ACRES)  (INCH/HR)  (DECIMAL)  CN
  COMMERCIAL                  C        0.35      0.25     0.100    50
  SUBAREA AVERAGE PERVIOUS LOSS RATE, Fp(INCH/HR) =  0.25
  SUBAREA AVERAGE PERVIOUS AREA FRACTION, Ap =  0.100
  SUBAREA AREA(ACRES) =    0.35      SUBAREA RUNOFF(CFS) =    0.46
  EFFECTIVE AREA(ACRES) =      3.75   AREA-AVERAGED Fm(INCH/HR) =  0.03
  AREA-AVERAGED Fp(INCH/HR) =  0.25  AREA-AVERAGED Ap =  0.10
  TOTAL AREA(ACRES) =        3.8       PEAK FLOW RATE(CFS) =       4.95

****************************************************************************
  FLOW PROCESS FROM NODE     24.00 TO NODE     25.00 IS CODE =  41
----------------------------------------------------------------------------
  >>>>>COMPUTE PIPE-FLOW TRAVEL TIME THRU SUBAREA<<<<<
```

```
  >>>>>USING USER-SPECIFIED PIPESIZE (EXISTING ELEMENT)<<<<<
================================================================================
  ELEVATION DATA: UPSTREAM(FEET) =    31.00  DOWNSTREAM(FEET) =    30.80
  FLOW LENGTH(FEET) =    54.00   MANNING'S N =  0.013
  ASSUME FULL-FLOWING PIPELINE
  PIPE-FLOW VELOCITY(FEET/SEC.) =   6.30
  PIPE FLOW VELOCITY = (TOTAL FLOW)/(PIPE CROSS SECTION AREA)
  GIVEN PIPE DIAMETER(INCH) =  12.00    NUMBER OF PIPES =   1
  PIPE-FLOW(CFS) =       4.95
  PIPE TRAVEL TIME(MIN.) =   0.14    Tc(MIN.) =   10.48
  LONGEST FLOWPATH FROM NODE     20.00 TO NODE     25.00 =     630.00 FEET.

****************************************************************************
  FLOW PROCESS FROM NODE     25.00 TO NODE     25.00 IS CODE =  81
----------------------------------------------------------------------------
  >>>>>ADDITION OF SUBAREA TO MAINLINE PEAK FLOW<<<<<
============================================================================
  MAINLINE Tc(MIN.) =   10.48
  *   2 YEAR RAINFALL INTENSITY(INCH/HR) =  1.480
  SUBAREA LOSS RATE DATA(AMC  I ):
   DEVELOPMENT TYPE/      SCS SOIL   AREA      Fp         Ap     SCS
       LAND USE           GROUP   (ACRES)  (INCH/HR)  (DECIMAL)  CN
  COMMERCIAL               C        0.50      0.25     0.100    50
  SUBAREA AVERAGE PERVIOUS LOSS RATE, Fp(INCH/HR) =  0.25
  SUBAREA AVERAGE PERVIOUS AREA FRACTION, Ap =  0.100
  SUBAREA AREA(ACRES) =    0.50      SUBAREA RUNOFF(CFS) =    0.65
  EFFECTIVE AREA(ACRES) =      4.25   AREA-AVERAGED Fm(INCH/HR) =  0.03
  AREA-AVERAGED Fp(INCH/HR) =  0.25  AREA-AVERAGED Ap =  0.10
  TOTAL AREA(ACRES) =        4.2       PEAK FLOW RATE(CFS) =       5.57

****************************************************************************
  FLOW PROCESS FROM NODE     25.00 TO NODE     26.00 IS CODE =  41
----------------------------------------------------------------------------
  >>>>>COMPUTE PIPE-FLOW TRAVEL TIME THRU SUBAREA<<<<<
  >>>>>USING USER-SPECIFIED PIPESIZE (EXISTING ELEMENT)<<<<<
============================================================================
  ELEVATION DATA: UPSTREAM(FEET) =    30.80  DOWNSTREAM(FEET) =    30.60
  FLOW LENGTH(FEET) =    51.00   MANNING'S N =  0.013
  ASSUME FULL-FLOWING PIPELINE
  PIPE-FLOW VELOCITY(FEET/SEC.) =   7.09
  PIPE FLOW VELOCITY = (TOTAL FLOW)/(PIPE CROSS SECTION AREA)
  GIVEN PIPE DIAMETER(INCH) =  12.00    NUMBER OF PIPES =   1
  PIPE-FLOW(CFS) =       5.57
  PIPE TRAVEL TIME(MIN.) =   0.12    Tc(MIN.) =   10.60
  LONGEST FLOWPATH FROM NODE     20.00 TO NODE     26.00 =     681.00 FEET.

****************************************************************************
  FLOW PROCESS FROM NODE     26.00 TO NODE     26.00 IS CODE =  81
----------------------------------------------------------------------------
  >>>>>ADDITION OF SUBAREA TO MAINLINE PEAK FLOW<<<<<
============================================================================
  MAINLINE Tc(MIN.) =   10.60
  *   2 YEAR RAINFALL INTENSITY(INCH/HR) =  1.470
  SUBAREA LOSS RATE DATA(AMC  I ):
   DEVELOPMENT TYPE/      SCS SOIL   AREA      Fp         Ap     SCS
       LAND USE           GROUP   (ACRES)  (INCH/HR)  (DECIMAL)  CN
  COMMERCIAL               C        0.50      0.25     0.100    50
  SUBAREA AVERAGE PERVIOUS LOSS RATE, Fp(INCH/HR) =  0.25
  SUBAREA AVERAGE PERVIOUS AREA FRACTION, Ap =  0.100
  SUBAREA AREA(ACRES) =    0.50      SUBAREA RUNOFF(CFS) =    0.65
  EFFECTIVE AREA(ACRES) =      4.75   AREA-AVERAGED Fm(INCH/HR) =  0.03
  AREA-AVERAGED Fp(INCH/HR) =  0.25  AREA-AVERAGED Ap =  0.10
```

```
  TOTAL AREA(ACRES) =        4.8       PEAK FLOW RATE(CFS) =       6.18

****************************************************************************
  FLOW PROCESS FROM NODE     26.00 TO NODE     27.00 IS CODE =  41
----------------------------------------------------------------------------
  >>>>>COMPUTE PIPE-FLOW TRAVEL TIME THRU SUBAREA<<<<<
  >>>>>USING USER-SPECIFIED PIPESIZE (EXISTING ELEMENT)<<<<<
============================================================================
  ELEVATION DATA: UPSTREAM(FEET) =    30.60  DOWNSTREAM(FEET) =    30.40
  FLOW LENGTH(FEET) =    44.00   MANNING'S N =  0.013
  ASSUME FULL-FLOWING PIPELINE
  PIPE-FLOW VELOCITY(FEET/SEC.) =   7.87
  PIPE FLOW VELOCITY = (TOTAL FLOW)/(PIPE CROSS SECTION AREA)
  GIVEN PIPE DIAMETER(INCH) =  12.00    NUMBER OF PIPES =   1
  PIPE-FLOW(CFS) =       6.18
  PIPE TRAVEL TIME(MIN.) =   0.09    Tc(MIN.) =   10.70
  LONGEST FLOWPATH FROM NODE     20.00 TO NODE     27.00 =     725.00 FEET.

****************************************************************************
  FLOW PROCESS FROM NODE     27.00 TO NODE     27.00 IS CODE =  81
----------------------------------------------------------------------------
  >>>>>ADDITION OF SUBAREA TO MAINLINE PEAK FLOW<<<<<
============================================================================
  MAINLINE Tc(MIN.) =   10.70
  *   2 YEAR RAINFALL INTENSITY(INCH/HR) =  1.463
  SUBAREA LOSS RATE DATA(AMC  I ):
   DEVELOPMENT TYPE/      SCS SOIL   AREA      Fp         Ap     SCS
       LAND USE            GROUP   (ACRES)  (INCH/HR)  (DECIMAL)  CN
  COMMERCIAL                 C        2.15      0.25     0.100    50
  SUBAREA AVERAGE PERVIOUS LOSS RATE, Fp(INCH/HR) =  0.25
  SUBAREA AVERAGE PERVIOUS AREA FRACTION, Ap =  0.100
  SUBAREA AREA(ACRES) =    2.15      SUBAREA RUNOFF(CFS) =    2.78
  EFFECTIVE AREA(ACRES) =      6.90   AREA-AVERAGED Fm(INCH/HR) =  0.03
  AREA-AVERAGED Fp(INCH/HR) =  0.25  AREA-AVERAGED Ap =  0.10
  TOTAL AREA(ACRES) =        6.9       PEAK FLOW RATE(CFS) =       8.93

****************************************************************************
  FLOW PROCESS FROM NODE     27.00 TO NODE     28.00 IS CODE =  41
----------------------------------------------------------------------------
  >>>>>COMPUTE PIPE-FLOW TRAVEL TIME THRU SUBAREA<<<<<
  >>>>>USING USER-SPECIFIED PIPESIZE (EXISTING ELEMENT)<<<<<
============================================================================
  ELEVATION DATA: UPSTREAM(FEET) =    30.40  DOWNSTREAM(FEET) =    29.30
  FLOW LENGTH(FEET) =   258.00   MANNING'S N =  0.013
  ASSUME FULL-FLOWING PIPELINE
  PIPE-FLOW VELOCITY(FEET/SEC.) =  11.37
  PIPE FLOW VELOCITY = (TOTAL FLOW)/(PIPE CROSS SECTION AREA)
  GIVEN PIPE DIAMETER(INCH) =  12.00    NUMBER OF PIPES =   1
  PIPE-FLOW(CFS) =       8.93
  PIPE TRAVEL TIME(MIN.) =   0.38    Tc(MIN.) =   11.07
  LONGEST FLOWPATH FROM NODE     20.00 TO NODE     28.00 =     983.00 FEET.

****************************************************************************
  FLOW PROCESS FROM NODE     28.00 TO NODE     28.00 IS CODE =  81
----------------------------------------------------------------------------
  >>>>>ADDITION OF SUBAREA TO MAINLINE PEAK FLOW<<<<<
============================================================================
  MAINLINE Tc(MIN.) =   11.07
  *   2 YEAR RAINFALL INTENSITY(INCH/HR) =  1.434
  SUBAREA LOSS RATE DATA(AMC  I ):
   DEVELOPMENT TYPE/      SCS SOIL   AREA      Fp         Ap     SCS
       LAND USE            GROUP   (ACRES)  (INCH/HR)  (DECIMAL)  CN
```

```
  COMMERCIAL                 C        1.17      0.25     0.100    50
  SUBAREA AVERAGE PERVIOUS LOSS RATE, Fp(INCH/HR) =  0.25
  SUBAREA AVERAGE PERVIOUS AREA FRACTION, Ap =  0.100
  SUBAREA AREA(ACRES) =    1.17      SUBAREA RUNOFF(CFS) =    1.48
  EFFECTIVE AREA(ACRES) =      8.07   AREA-AVERAGED Fm(INCH/HR) =  0.03
  AREA-AVERAGED Fp(INCH/HR) =  0.25  AREA-AVERAGED Ap =  0.10
  TOTAL AREA(ACRES) =        8.1       PEAK FLOW RATE(CFS) =      10.23

****************************************************************************
  FLOW PROCESS FROM NODE     28.00 TO NODE     29.00 IS CODE =  41
----------------------------------------------------------------------------
  >>>>>COMPUTE PIPE-FLOW TRAVEL TIME THRU SUBAREA<<<<<
  >>>>>USING USER-SPECIFIED PIPESIZE (EXISTING ELEMENT)<<<<<
============================================================================
  ELEVATION DATA: UPSTREAM(FEET) =    29.30  DOWNSTREAM(FEET) =    28.50
  FLOW LENGTH(FEET) =   186.00   MANNING'S N =  0.013
  ASSUME FULL-FLOWING PIPELINE
  PIPE-FLOW VELOCITY(FEET/SEC.) =  13.03
  PIPE FLOW VELOCITY = (TOTAL FLOW)/(PIPE CROSS SECTION AREA)
  GIVEN PIPE DIAMETER(INCH) =  12.00    NUMBER OF PIPES =   1
  PIPE-FLOW(CFS) =      10.23
  PIPE TRAVEL TIME(MIN.) =   0.24    Tc(MIN.) =   11.31
  LONGEST FLOWPATH FROM NODE     20.00 TO NODE     29.00 =    1169.00 FEET.

****************************************************************************
  FLOW PROCESS FROM NODE     29.00 TO NODE     29.00 IS CODE =  81
----------------------------------------------------------------------------
  >>>>>ADDITION OF SUBAREA TO MAINLINE PEAK FLOW<<<<<
============================================================================
  MAINLINE Tc(MIN.) =   11.31
  *   2 YEAR RAINFALL INTENSITY(INCH/HR) =  1.417
  SUBAREA LOSS RATE DATA(AMC  I ):
   DEVELOPMENT TYPE/      SCS SOIL   AREA      Fp         Ap     SCS
       LAND USE            GROUP   (ACRES)  (INCH/HR)  (DECIMAL)  CN
  COMMERCIAL                 C        0.78      0.25     0.100    50
  SUBAREA AVERAGE PERVIOUS LOSS RATE, Fp(INCH/HR) =  0.25
  SUBAREA AVERAGE PERVIOUS AREA FRACTION, Ap =  0.100
  SUBAREA AREA(ACRES) =    0.78      SUBAREA RUNOFF(CFS) =    0.98
  EFFECTIVE AREA(ACRES) =      8.85   AREA-AVERAGED Fm(INCH/HR) =  0.03
  AREA-AVERAGED Fp(INCH/HR) =  0.25  AREA-AVERAGED Ap =  0.10
  TOTAL AREA(ACRES) =        8.8       PEAK FLOW RATE(CFS) =      11.09

****************************************************************************
  FLOW PROCESS FROM NODE     29.00 TO NODE     29.10 IS CODE =  41
----------------------------------------------------------------------------
  >>>>>COMPUTE PIPE-FLOW TRAVEL TIME THRU SUBAREA<<<<<
  >>>>>USING USER-SPECIFIED PIPESIZE (EXISTING ELEMENT)<<<<<
============================================================================
  ELEVATION DATA: UPSTREAM(FEET) =    28.50  DOWNSTREAM(FEET) =    27.90
  FLOW LENGTH(FEET) =   157.00   MANNING'S N =  0.013
  ASSUME FULL-FLOWING PIPELINE
  PIPE-FLOW VELOCITY(FEET/SEC.) =  14.11
  PIPE FLOW VELOCITY = (TOTAL FLOW)/(PIPE CROSS SECTION AREA)
  GIVEN PIPE DIAMETER(INCH) =  12.00    NUMBER OF PIPES =   1
  PIPE-FLOW(CFS) =      11.09
  PIPE TRAVEL TIME(MIN.) =   0.19    Tc(MIN.) =   11.50
  LONGEST FLOWPATH FROM NODE     20.00 TO NODE     29.10 =    1326.00 FEET.

****************************************************************************
  FLOW PROCESS FROM NODE     29.10 TO NODE     29.10 IS CODE =  81
----------------------------------------------------------------------------
  >>>>>ADDITION OF SUBAREA TO MAINLINE PEAK FLOW<<<<<
```

```
==============================================================================
  MAINLINE Tc(MIN.) =   11.50
  *   2 YEAR RAINFALL INTENSITY(INCH/HR) =  1.404
  SUBAREA LOSS RATE DATA(AMC  I ):
   DEVELOPMENT TYPE/      SCS SOIL   AREA      Fp         Ap     SCS
       LAND USE            GROUP   (ACRES)  (INCH/HR)  (DECIMAL)  CN
  COMMERCIAL                 C        0.62      0.25     0.100    50
  SUBAREA AVERAGE PERVIOUS LOSS RATE, Fp(INCH/HR) =  0.25
  SUBAREA AVERAGE PERVIOUS AREA FRACTION, Ap =  0.100
  SUBAREA AREA(ACRES) =    0.62      SUBAREA RUNOFF(CFS) =    0.77
  EFFECTIVE AREA(ACRES) =      9.47   AREA-AVERAGED Fm(INCH/HR) =  0.03
  AREA-AVERAGED Fp(INCH/HR) =  0.25  AREA-AVERAGED Ap =  0.10
  TOTAL AREA(ACRES) =        9.5       PEAK FLOW RATE(CFS) =      11.75

******************************************************************************
  FLOW PROCESS FROM NODE     29.10 TO NODE     29.20 IS CODE =  41
------------------------------------------------------------------------------
  >>>>>COMPUTE PIPE-FLOW TRAVEL TIME THRU SUBAREA<<<<<
  >>>>>USING USER-SPECIFIED PIPESIZE (EXISTING ELEMENT)<<<<<
==============================================================================
  ELEVATION DATA: UPSTREAM(FEET) =    27.90  DOWNSTREAM(FEET) =    27.50
  FLOW LENGTH(FEET) =   107.00   MANNING'S N =  0.013
  ASSUME FULL-FLOWING PIPELINE
  PIPE-FLOW VELOCITY(FEET/SEC.) =  14.96
  PIPE FLOW VELOCITY = (TOTAL FLOW)/(PIPE CROSS SECTION AREA)
  GIVEN PIPE DIAMETER(INCH) =  12.00    NUMBER OF PIPES =   1
  PIPE-FLOW(CFS) =      11.75
  PIPE TRAVEL TIME(MIN.) =   0.12    Tc(MIN.) =   11.62
  LONGEST FLOWPATH FROM NODE     20.00 TO NODE     29.20 =    1433.00 FEET.

+----------------------------------------------------------------------------+
| AREA 'E'                                                                   |
|                                                                            |
|                                                                            |
+----------------------------------------------------------------------------+

******************************************************************************
  FLOW PROCESS FROM NODE     30.00 TO NODE     31.00 IS CODE =  21
------------------------------------------------------------------------------
  >>>>>RATIONAL METHOD INITIAL SUBAREA ANALYSIS<<<<<
  >>USE TIME-OF-CONCENTRATION NOMOGRAPH FOR INITIAL SUBAREA<<
==============================================================================
  INITIAL SUBAREA FLOW-LENGTH(FEET) =   179.00
  ELEVATION DATA: UPSTREAM(FEET) =     35.00  DOWNSTREAM(FEET) =     33.40

  Tc = K*[(LENGTH** 3.00)/(ELEVATION CHANGE)]**0.20
  SUBAREA ANALYSIS USED MINIMUM Tc(MIN.) =    6.220
  *   2 YEAR RAINFALL INTENSITY(INCH/HR) =  1.997
  SUBAREA Tc AND LOSS RATE DATA(AMC  I ):
   DEVELOPMENT TYPE/      SCS SOIL   AREA      Fp         Ap     SCS   Tc
       LAND USE            GROUP   (ACRES)  (INCH/HR)  (DECIMAL)  CN  (MIN.)
  COMMERCIAL                 C        1.54      0.25     0.100    50    6.22
  SUBAREA AVERAGE PERVIOUS LOSS RATE, Fp(INCH/HR) =  0.25
  SUBAREA AVERAGE PERVIOUS AREA FRACTION, Ap =  0.100
  SUBAREA RUNOFF(CFS) =      2.73
  TOTAL AREA(ACRES) =      1.54   PEAK FLOW RATE(CFS) =      2.73

******************************************************************************
  FLOW PROCESS FROM NODE     31.00 TO NODE     32.00 IS CODE =  41
------------------------------------------------------------------------------
  >>>>>COMPUTE PIPE-FLOW TRAVEL TIME THRU SUBAREA<<<<<
  >>>>>USING USER-SPECIFIED PIPESIZE (EXISTING ELEMENT)<<<<<
```

```
==============================================================================
  ELEVATION DATA: UPSTREAM(FEET) =    31.40  DOWNSTREAM(FEET) =    30.40
  FLOW LENGTH(FEET) =   193.00   MANNING'S N =  0.013
  ASSUME FULL-FLOWING PIPELINE
  PIPE-FLOW VELOCITY(FEET/SEC.) =   3.48
  PIPE FLOW VELOCITY = (TOTAL FLOW)/(PIPE CROSS SECTION AREA)
  GIVEN PIPE DIAMETER(INCH) =  12.00    NUMBER OF PIPES =   1
  PIPE-FLOW(CFS) =       2.73
  PIPE TRAVEL TIME(MIN.) =   0.92    Tc(MIN.) =    7.14
  LONGEST FLOWPATH FROM NODE     30.00 TO NODE     32.00 =     372.00 FEET.

****************************************************************************
  FLOW PROCESS FROM NODE     32.00 TO NODE     32.00 IS CODE =  81
----------------------------------------------------------------------------
  >>>>>ADDITION OF SUBAREA TO MAINLINE PEAK FLOW<<<<<
============================================================================
  MAINLINE Tc(MIN.) =    7.14
  *   2 YEAR RAINFALL INTENSITY(INCH/HR) =  1.844
  SUBAREA LOSS RATE DATA(AMC  I ):
   DEVELOPMENT TYPE/       SCS SOIL   AREA      Fp          Ap     SCS
       LAND USE             GROUP   (ACRES)  (INCH/HR)  (DECIMAL)  CN
  COMMERCIAL                 C        1.35      0.25     0.100    50
  SUBAREA AVERAGE PERVIOUS LOSS RATE, Fp(INCH/HR) =  0.25
  SUBAREA AVERAGE PERVIOUS AREA FRACTION, Ap =  0.100
  SUBAREA AREA(ACRES) =    1.35      SUBAREA RUNOFF(CFS) =    2.21
  EFFECTIVE AREA(ACRES) =      2.89   AREA-AVERAGED Fm(INCH/HR) =  0.03
  AREA-AVERAGED Fp(INCH/HR) =  0.25  AREA-AVERAGED Ap =  0.10
  TOTAL AREA(ACRES) =        2.9       PEAK FLOW RATE(CFS) =       4.73

****************************************************************************
  FLOW PROCESS FROM NODE     32.00 TO NODE     33.00 IS CODE =  41
----------------------------------------------------------------------------
  >>>>>COMPUTE PIPE-FLOW TRAVEL TIME THRU SUBAREA<<<<<
  >>>>>USING USER-SPECIFIED PIPESIZE (EXISTING ELEMENT)<<<<<
============================================================================
  ELEVATION DATA: UPSTREAM(FEET) =    30.40  DOWNSTREAM(FEET) =    29.40
  FLOW LENGTH(FEET) =   192.00   MANNING'S N =  0.013
  ASSUME FULL-FLOWING PIPELINE
  PIPE-FLOW VELOCITY(FEET/SEC.) =   6.03
  PIPE FLOW VELOCITY = (TOTAL FLOW)/(PIPE CROSS SECTION AREA)
  GIVEN PIPE DIAMETER(INCH) =  12.00    NUMBER OF PIPES =   1
  PIPE-FLOW(CFS) =       4.73
  PIPE TRAVEL TIME(MIN.) =   0.53    Tc(MIN.) =    7.67
  LONGEST FLOWPATH FROM NODE     30.00 TO NODE     33.00 =     564.00 FEET.

****************************************************************************
  FLOW PROCESS FROM NODE     33.00 TO NODE     33.00 IS CODE =   1
----------------------------------------------------------------------------
  >>>>>DESIGNATE INDEPENDENT STREAM FOR CONFLUENCE<<<<<
============================================================================
  TOTAL NUMBER OF STREAMS =  2
  CONFLUENCE VALUES USED FOR INDEPENDENT STREAM  1 ARE:
  TIME OF CONCENTRATION(MIN.) =    7.67
  RAINFALL INTENSITY(INCH/HR) =   1.77
  AREA-AVERAGED Fm(INCH/HR) =  0.03
  AREA-AVERAGED Fp(INCH/HR) =  0.25
  AREA-AVERAGED Ap =  0.10
  EFFECTIVE STREAM AREA(ACRES) =       2.89
  TOTAL STREAM AREA(ACRES) =       2.89
  PEAK FLOW RATE(CFS) AT CONFLUENCE =       4.73

****************************************************************************
```

```
 FLOW PROCESS FROM NODE     34.00 TO NODE     33.00 IS CODE =  21
----------------------------------------------------------------------------
 >>>>>RATIONAL METHOD INITIAL SUBAREA ANALYSIS<<<<<
 >>USE TIME-OF-CONCENTRATION NOMOGRAPH FOR INITIAL SUBAREA<<
============================================================================
 INITIAL SUBAREA FLOW-LENGTH(FEET) =   266.00
 ELEVATION DATA: UPSTREAM(FEET) =     35.00  DOWNSTREAM(FEET) =     33.30

 Tc = K*[(LENGTH** 3.00)/(ELEVATION CHANGE)]**0.20
 SUBAREA ANALYSIS USED MINIMUM Tc(MIN.) =    7.793
 *   2 YEAR RAINFALL INTENSITY(INCH/HR) =  1.755
 SUBAREA Tc AND LOSS RATE DATA(AMC  I ):
  DEVELOPMENT TYPE/      SCS SOIL   AREA      Fp         Ap     SCS   Tc
      LAND USE            GROUP   (ACRES)  (INCH/HR)  (DECIMAL)  CN  (MIN.)
 COMMERCIAL                 C        1.85      0.25     0.100    50    7.79
 SUBAREA AVERAGE PERVIOUS LOSS RATE, Fp(INCH/HR) =  0.25
 SUBAREA AVERAGE PERVIOUS AREA FRACTION, Ap =  0.100
 SUBAREA RUNOFF(CFS) =      2.88
 TOTAL AREA(ACRES) =      1.85   PEAK FLOW RATE(CFS) =      2.88

****************************************************************************
 FLOW PROCESS FROM NODE     33.00 TO NODE     33.00 IS CODE =   1
----------------------------------------------------------------------------
 >>>>>DESIGNATE INDEPENDENT STREAM FOR CONFLUENCE<<<<<
 >>>>>AND COMPUTE VARIOUS CONFLUENCED STREAM VALUES<<<<<
============================================================================
 TOTAL NUMBER OF STREAMS =  2
 CONFLUENCE VALUES USED FOR INDEPENDENT STREAM  2 ARE:
 TIME OF CONCENTRATION(MIN.) =    7.79
 RAINFALL INTENSITY(INCH/HR) =   1.75
 AREA-AVERAGED Fm(INCH/HR) =  0.03
 AREA-AVERAGED Fp(INCH/HR) =  0.25
 AREA-AVERAGED Ap =  0.10
 EFFECTIVE STREAM AREA(ACRES) =       1.85
 TOTAL STREAM AREA(ACRES) =       1.85
 PEAK FLOW RATE(CFS) AT CONFLUENCE =       2.88

 ** CONFLUENCE DATA **
  STREAM       Q      Tc   Intensity   Fp(Fm)     Ap     Ae     HEADWATER
  NUMBER     (CFS)  (MIN.) (INCH/HR) (INCH/HR)         (ACRES)    NODE
     1        4.73    7.67    1.770  0.25( 0.03) 0.10       2.9      30.00
     2        2.88    7.79    1.755  0.25( 0.03) 0.10       1.9      34.00

 RAINFALL INTENSITY AND TIME OF CONCENTRATION RATIO
 CONFLUENCE FORMULA USED FOR  2 STREAMS.

 ** PEAK FLOW RATE TABLE **
  STREAM       Q      Tc   Intensity   Fp(Fm)     Ap     Ae     HEADWATER
  NUMBER     (CFS)  (MIN.) (INCH/HR) (INCH/HR)         (ACRES)    NODE
     1        7.59    7.67    1.770  0.25( 0.03) 0.10       4.7      30.00
     2        7.57    7.79    1.755  0.25( 0.03) 0.10       4.7      34.00

 COMPUTED CONFLUENCE ESTIMATES ARE AS FOLLOWS:
 PEAK FLOW RATE(CFS) =       7.59    Tc(MIN.) =     7.67
 EFFECTIVE AREA(ACRES) =       4.71   AREA-AVERAGED Fm(INCH/HR) =  0.03
 AREA-AVERAGED Fp(INCH/HR) =  0.25  AREA-AVERAGED Ap =  0.10
 TOTAL AREA(ACRES) =        4.7
 LONGEST FLOWPATH FROM NODE     30.00 TO NODE     33.00 =     564.00 FEET.

****************************************************************************
 FLOW PROCESS FROM NODE     33.00 TO NODE     35.00 IS CODE =  41
----------------------------------------------------------------------------
```

```
  >>>>>COMPUTE PIPE-FLOW TRAVEL TIME THRU SUBAREA<<<<<
  >>>>>USING USER-SPECIFIED PIPESIZE (EXISTING ELEMENT)<<<<<
============================================================================
  ELEVATION DATA: UPSTREAM(FEET) =    29.40  DOWNSTREAM(FEET) =    28.40
  FLOW LENGTH(FEET) =   197.00   MANNING'S N =  0.013
  ASSUME FULL-FLOWING PIPELINE
  PIPE-FLOW VELOCITY(FEET/SEC.) =   9.67
  PIPE FLOW VELOCITY = (TOTAL FLOW)/(PIPE CROSS SECTION AREA)
  GIVEN PIPE DIAMETER(INCH) =  12.00    NUMBER OF PIPES =   1
  PIPE-FLOW(CFS) =       7.59
  PIPE TRAVEL TIME(MIN.) =   0.34    Tc(MIN.) =    8.01
  LONGEST FLOWPATH FROM NODE     30.00 TO NODE     35.00 =     761.00 FEET.

+--------------------------------------------------------------------------+
| AREA 'F'                                                                 |
|                                                                          |
|                                                                          |
+--------------------------------------------------------------------------+

****************************************************************************
  FLOW PROCESS FROM NODE     40.00 TO NODE     41.00 IS CODE =  21
----------------------------------------------------------------------------
  >>>>>RATIONAL METHOD INITIAL SUBAREA ANALYSIS<<<<<
  >>USE TIME-OF-CONCENTRATION NOMOGRAPH FOR INITIAL SUBAREA<<
============================================================================
  INITIAL SUBAREA FLOW-LENGTH(FEET) =   330.00
  ELEVATION DATA: UPSTREAM(FEET) =     35.70  DOWNSTREAM(FEET) =     35.20

  Tc = K*[(LENGTH** 3.00)/(ELEVATION CHANGE)]**0.20
  SUBAREA ANALYSIS USED MINIMUM Tc(MIN.) =   11.329
  *   2 YEAR RAINFALL INTENSITY(INCH/HR) =  1.416
  SUBAREA Tc AND LOSS RATE DATA(AMC  I ):
   DEVELOPMENT TYPE/      SCS SOIL   AREA      Fp         Ap     SCS   Tc
       LAND USE            GROUP   (ACRES)  (INCH/HR)  (DECIMAL)  CN  (MIN.)
  COMMERCIAL                 C        0.36      0.25     0.100    50   11.33
  SUBAREA AVERAGE PERVIOUS LOSS RATE, Fp(INCH/HR) =  0.25
  SUBAREA AVERAGE PERVIOUS AREA FRACTION, Ap =  0.100
  SUBAREA RUNOFF(CFS) =      0.45
  TOTAL AREA(ACRES) =      0.36   PEAK FLOW RATE(CFS) =      0.45

****************************************************************************
  FLOW PROCESS FROM NODE     41.00 TO NODE     42.00 IS CODE =  61
----------------------------------------------------------------------------
  >>>>>COMPUTE STREET FLOW TRAVEL TIME THRU SUBAREA<<<<<
  >>>>>(STANDARD CURB SECTION USED)<<<<<
============================================================================
  UPSTREAM ELEVATION(FEET) =   35.20  DOWNSTREAM ELEVATION(FEET) =   34.60
  STREET LENGTH(FEET) =   183.00   CURB HEIGHT(INCHES) =  8.0
  STREET HALFWIDTH(FEET) = 30.00

  DISTANCE FROM CROWN TO CROSSFALL GRADEBREAK(FEET) =  20.00
  INSIDE STREET CROSSFALL(DECIMAL) =  0.018
  OUTSIDE STREET CROSSFALL(DECIMAL)  =  0.018

  SPECIFIED NUMBER OF HALFSTREETS CARRYING RUNOFF =  2
  STREET PARKWAY CROSSFALL(DECIMAL)  =  0.020
  Manning's FRICTION FACTOR for Streetflow Section(curb-to-curb) =   0.0150
  Manning's FRICTION FACTOR for Back-of-Walk Flow Section =   0.0200

    **TRAVEL TIME COMPUTED USING ESTIMATED FLOW(CFS) =       0.58
    STREETFLOW MODEL RESULTS USING ESTIMATED FLOW:
    STREET FLOW DEPTH(FEET) =  0.21
```

```
    HALFSTREET FLOOD WIDTH(FEET) =    2.59
    AVERAGE FLOW VELOCITY(FEET/SEC.) =    1.14
    PRODUCT OF DEPTH&VELOCITY(FT*FT/SEC.) =    0.24
  STREET FLOW TRAVEL TIME(MIN.) =   2.68   Tc(MIN.) =   14.01
  *   2 YEAR RAINFALL INTENSITY(INCH/HR) =  1.253
  SUBAREA LOSS RATE DATA(AMC  I ):
   DEVELOPMENT TYPE/      SCS SOIL   AREA      Fp         Ap     SCS
       LAND USE            GROUP   (ACRES)  (INCH/HR)  (DECIMAL)  CN
  COMMERCIAL                C        0.23      0.25     0.100    50
  SUBAREA AVERAGE PERVIOUS LOSS RATE, Fp(INCH/HR) =  0.25
  SUBAREA AVERAGE PERVIOUS AREA FRACTION, Ap =  0.100
  SUBAREA AREA(ACRES) =    0.23      SUBAREA RUNOFF(CFS) =    0.25
  EFFECTIVE AREA(ACRES) =      0.59    AREA-AVERAGED Fm(INCH/HR) =  0.03
  AREA-AVERAGED Fp(INCH/HR) =  0.25  AREA-AVERAGED Ap =  0.10
  TOTAL AREA(ACRES) =        0.6        PEAK FLOW RATE(CFS) =       0.65

  END OF SUBAREA STREET FLOW HYDRAULICS:
  DEPTH(FEET) = 0.23   HALFSTREET FLOOD WIDTH(FEET) =   3.59
  FLOW VELOCITY(FEET/SEC.) =  1.05   DEPTH*VELOCITY(FT*FT/SEC.) =   0.24
  LONGEST FLOWPATH FROM NODE     40.00 TO NODE     42.00 =     513.00 FEET.

+----------------------------------------------------------------------------+
| AREA 'H'                                                                   |
|                                                                            |
|                                                                            |
+----------------------------------------------------------------------------+

****************************************************************************
  FLOW PROCESS FROM NODE     50.00 TO NODE     51.00 IS CODE =  21
----------------------------------------------------------------------------
  >>>>>RATIONAL METHOD INITIAL SUBAREA ANALYSIS<<<<<
  >>USE TIME-OF-CONCENTRATION NOMOGRAPH FOR INITIAL SUBAREA<<
============================================================================
  INITIAL SUBAREA FLOW-LENGTH(FEET) =   330.00
  ELEVATION DATA: UPSTREAM(FEET) =     35.40  DOWNSTREAM(FEET) =     34.80

  Tc = K*[(LENGTH** 3.00)/(ELEVATION CHANGE)]**0.20
  SUBAREA ANALYSIS USED MINIMUM Tc(MIN.) =   10.923
  *   2 YEAR RAINFALL INTENSITY(INCH/HR) =  1.445
  SUBAREA Tc AND LOSS RATE DATA(AMC  I ):
   DEVELOPMENT TYPE/      SCS SOIL   AREA      Fp         Ap     SCS   Tc
       LAND USE            GROUP   (ACRES)  (INCH/HR)  (DECIMAL)  CN  (MIN.)
  COMMERCIAL                C        0.56      0.25     0.100    50   10.92
  SUBAREA AVERAGE PERVIOUS LOSS RATE, Fp(INCH/HR) =  0.25
  SUBAREA AVERAGE PERVIOUS AREA FRACTION, Ap =  0.100
  SUBAREA RUNOFF(CFS) =      0.72
  TOTAL AREA(ACRES) =      0.56   PEAK FLOW RATE(CFS) =      0.72

****************************************************************************
  FLOW PROCESS FROM NODE     51.00 TO NODE     52.00 IS CODE =  91
----------------------------------------------------------------------------
  >>>>>COMPUTE "V" GUTTER FLOW TRAVEL TIME THRU SUBAREA<<<<<
============================================================================
  UPSTREAM NODE ELEVATION(FEET) =     34.80
  DOWNSTREAM NODE ELEVATION(FEET) =     32.80
  CHANNEL LENGTH THRU SUBAREA(FEET) =   224.00
  "V" GUTTER WIDTH(FEET) =   5.00   GUTTER HIKE(FEET) =  0.050
  PAVEMENT LIP(FEET) =  0.010   MANNING'S N = .0150
  PAVEMENT CROSSFALL(DECIMAL NOTATION) = 0.02000
  MAXIMUM DEPTH(FEET) =  10.00
  *   2 YEAR RAINFALL INTENSITY(INCH/HR) =  1.309
  SUBAREA LOSS RATE DATA(AMC  I ):
```

```
   DEVELOPMENT TYPE/      SCS SOIL   AREA      Fp         Ap      SCS
       LAND USE            GROUP   (ACRES)  (INCH/HR)  (DECIMAL)  CN
  COMMERCIAL                 C        1.65      0.25      0.100    50
  SUBAREA AVERAGE PERVIOUS LOSS RATE, Fp(INCH/HR) =  0.25
  SUBAREA AVERAGE PERVIOUS AREA FRACTION, Ap =  0.100
  TRAVEL TIME COMPUTED USING ESTIMATED FLOW(CFS) =      1.66
  TRAVEL TIME THRU SUBAREA BASED ON VELOCITY(FEET/SEC.) =   1.80
  AVERAGE FLOW DEPTH(FEET) =   0.14   FLOOD WIDTH(FEET) =   13.19
  "V" GUTTER FLOW TRAVEL TIME(MIN.) =   2.07   Tc(MIN.) =   12.99
  SUBAREA AREA(ACRES) =    1.65       SUBAREA RUNOFF(CFS) =    1.91
  EFFECTIVE AREA(ACRES) =    2.21     AREA-AVERAGED Fm(INCH/HR) =   0.03
  AREA-AVERAGED Fp(INCH/HR) =   0.25  AREA-AVERAGED Ap =   0.10
  TOTAL AREA(ACRES) =        2.2         PEAK FLOW RATE(CFS) =       2.55

  END OF SUBAREA "V" GUTTER HYDRAULICS:
  DEPTH(FEET) =  0.17   FLOOD WIDTH(FEET) =   15.62
  FLOW VELOCITY(FEET/SEC.) =   2.01   DEPTH*VELOCITY(FT*FT/SEC) =   0.33
  LONGEST FLOWPATH FROM NODE     50.00 TO NODE     52.00 =     554.00 FEET.

****************************************************************************
  FLOW PROCESS FROM NODE     52.00 TO NODE     53.00 IS CODE =  41
----------------------------------------------------------------------------
  >>>>>COMPUTE PIPE-FLOW TRAVEL TIME THRU SUBAREA<<<<<
  >>>>>USING USER-SPECIFIED PIPESIZE (EXISTING ELEMENT)<<<<<
============================================================================
  ELEVATION DATA: UPSTREAM(FEET) =    32.20  DOWNSTREAM(FEET) =    30.40
  FLOW LENGTH(FEET) =   497.00   MANNING'S N =  0.013
  ASSUME FULL-FLOWING PIPELINE
  PIPE-FLOW VELOCITY(FEET/SEC.) =   3.25
  PIPE FLOW VELOCITY = (TOTAL FLOW)/(PIPE CROSS SECTION AREA)
  GIVEN PIPE DIAMETER(INCH) =  12.00    NUMBER OF PIPES =   1
  PIPE-FLOW(CFS) =       2.55
  PIPE TRAVEL TIME(MIN.) =   2.55    Tc(MIN.) =   15.54
  LONGEST FLOWPATH FROM NODE     50.00 TO NODE     53.00 =    1051.00 FEET.

****************************************************************************
  FLOW PROCESS FROM NODE     53.00 TO NODE     53.00 IS CODE =   1
----------------------------------------------------------------------------
  >>>>>DESIGNATE INDEPENDENT STREAM FOR CONFLUENCE<<<<<
============================================================================
  TOTAL NUMBER OF STREAMS =  2
  CONFLUENCE VALUES USED FOR INDEPENDENT STREAM  1 ARE:
  TIME OF CONCENTRATION(MIN.) =   15.54
  RAINFALL INTENSITY(INCH/HR) =   1.18
  AREA-AVERAGED Fm(INCH/HR) =  0.03
  AREA-AVERAGED Fp(INCH/HR) =  0.25
  AREA-AVERAGED Ap =  0.10
  EFFECTIVE STREAM AREA(ACRES) =       2.21
  TOTAL STREAM AREA(ACRES) =       2.21
  PEAK FLOW RATE(CFS) AT CONFLUENCE =       2.55

****************************************************************************
  FLOW PROCESS FROM NODE     53.10 TO NODE     53.20 IS CODE =  21
----------------------------------------------------------------------------
  >>>>>RATIONAL METHOD INITIAL SUBAREA ANALYSIS<<<<<
  >>USE TIME-OF-CONCENTRATION NOMOGRAPH FOR INITIAL SUBAREA<<
============================================================================
  INITIAL SUBAREA FLOW-LENGTH(FEET) =   230.00
  ELEVATION DATA: UPSTREAM(FEET) =     36.30  DOWNSTREAM(FEET) =     33.50

  Tc = K*[(LENGTH** 3.00)/(ELEVATION CHANGE)]**0.20
  SUBAREA ANALYSIS USED MINIMUM Tc(MIN.) =    6.464
```

```
  *   2 YEAR RAINFALL INTENSITY(INCH/HR) =  1.953
  SUBAREA Tc AND LOSS RATE DATA(AMC  I ):
   DEVELOPMENT TYPE/      SCS SOIL   AREA      Fp         Ap     SCS   Tc
        LAND USE           GROUP   (ACRES)  (INCH/HR)  (DECIMAL)  CN  (MIN.)
  COMMERCIAL                 C        0.66      0.25     0.100    50    6.46
  SUBAREA AVERAGE PERVIOUS LOSS RATE, Fp(INCH/HR) =  0.25
  SUBAREA AVERAGE PERVIOUS AREA FRACTION, Ap =  0.100
  SUBAREA RUNOFF(CFS) =      1.15
  TOTAL AREA(ACRES) =      0.66   PEAK FLOW RATE(CFS) =      1.15

****************************************************************************
  FLOW PROCESS FROM NODE     53.20 TO NODE     53.00 IS CODE =  41
----------------------------------------------------------------------------
  >>>>>COMPUTE PIPE-FLOW TRAVEL TIME THRU SUBAREA<<<<<
  >>>>>USING USER-SPECIFIED PIPESIZE (EXISTING ELEMENT)<<<<<
============================================================================
  ELEVATION DATA: UPSTREAM(FEET) =    30.60  DOWNSTREAM(FEET) =    30.40
  FLOW LENGTH(FEET) =   118.00   MANNING'S N =  0.013
  DEPTH OF FLOW IN  12.0 INCH PIPE IS   8.3 INCHES
  PIPE-FLOW VELOCITY(FEET/SEC.) =   1.98
  GIVEN PIPE DIAMETER(INCH) =  12.00    NUMBER OF PIPES =   1
  PIPE-FLOW(CFS) =       1.15
  PIPE TRAVEL TIME(MIN.) =   0.99    Tc(MIN.) =    7.46
  LONGEST FLOWPATH FROM NODE     53.10 TO NODE     53.00 =     348.00 FEET.

****************************************************************************
  FLOW PROCESS FROM NODE     53.00 TO NODE     53.00 IS CODE =   1
----------------------------------------------------------------------------
  >>>>>DESIGNATE INDEPENDENT STREAM FOR CONFLUENCE<<<<<
  >>>>>AND COMPUTE VARIOUS CONFLUENCED STREAM VALUES<<<<<
============================================================================
  TOTAL NUMBER OF STREAMS =  2
  CONFLUENCE VALUES USED FOR INDEPENDENT STREAM  2 ARE:
  TIME OF CONCENTRATION(MIN.) =    7.46
  RAINFALL INTENSITY(INCH/HR) =   1.80
  AREA-AVERAGED Fm(INCH/HR) =  0.03
  AREA-AVERAGED Fp(INCH/HR) =  0.25
  AREA-AVERAGED Ap =  0.10
  EFFECTIVE STREAM AREA(ACRES) =       0.66
  TOTAL STREAM AREA(ACRES) =       0.66
  PEAK FLOW RATE(CFS) AT CONFLUENCE =       1.15

  ** CONFLUENCE DATA **
   STREAM       Q      Tc   Intensity   Fp(Fm)     Ap     Ae     HEADWATER
   NUMBER     (CFS)  (MIN.) (INCH/HR) (INCH/HR)         (ACRES)    NODE
      1        2.55   15.54    1.181  0.25( 0.03) 0.10       2.2      50.00
      2        1.15    7.46    1.799  0.25( 0.03) 0.10       0.7      53.10

  RAINFALL INTENSITY AND TIME OF CONCENTRATION RATIO
  CONFLUENCE FORMULA USED FOR  2 STREAMS.

  ** PEAK FLOW RATE TABLE **
   STREAM       Q      Tc   Intensity   Fp(Fm)     Ap     Ae     HEADWATER
   NUMBER     (CFS)  (MIN.) (INCH/HR) (INCH/HR)         (ACRES)    NODE
      1        3.03    7.46    1.799  0.25( 0.03) 0.10       1.7      53.10
      2        3.30   15.54    1.181  0.25( 0.03) 0.10       2.9      50.00

  COMPUTED CONFLUENCE ESTIMATES ARE AS FOLLOWS:
  PEAK FLOW RATE(CFS) =       3.30    Tc(MIN.) =    15.54
  EFFECTIVE AREA(ACRES) =       2.87   AREA-AVERAGED Fm(INCH/HR) =  0.03
  AREA-AVERAGED Fp(INCH/HR) =  0.25  AREA-AVERAGED Ap =  0.10
  TOTAL AREA(ACRES) =        2.9
```

```
 LONGEST FLOWPATH FROM NODE     50.00 TO NODE     53.00 =    1051.00 FEET.

****************************************************************************
 FLOW PROCESS FROM NODE     53.00 TO NODE     53.00 IS CODE =  81
----------------------------------------------------------------------------
 >>>>>ADDITION OF SUBAREA TO MAINLINE PEAK FLOW<<<<<
============================================================================
 MAINLINE Tc(MIN.) =   15.54
 *   2 YEAR RAINFALL INTENSITY(INCH/HR) =  1.181
 SUBAREA LOSS RATE DATA(AMC  I ):
  DEVELOPMENT TYPE/      SCS SOIL   AREA      Fp         Ap     SCS
      LAND USE            GROUP   (ACRES)  (INCH/HR)  (DECIMAL)  CN
 COMMERCIAL                C        3.00      0.25     0.100    50
 SUBAREA AVERAGE PERVIOUS LOSS RATE, Fp(INCH/HR) =  0.25
 SUBAREA AVERAGE PERVIOUS AREA FRACTION, Ap =  0.100
 SUBAREA AREA(ACRES) =    3.00      SUBAREA RUNOFF(CFS) =    3.12
 EFFECTIVE AREA(ACRES) =      5.87   AREA-AVERAGED Fm(INCH/HR) =  0.03
 AREA-AVERAGED Fp(INCH/HR) =  0.25  AREA-AVERAGED Ap =  0.10
 TOTAL AREA(ACRES) =        5.9       PEAK FLOW RATE(CFS) =       6.11

 ** PEAK FLOW RATE TABLE **
  STREAM       Q      Tc   Intensity   Fp(Fm)     Ap     Ae     HEADWATER
  NUMBER     (CFS)  (MIN.) (INCH/HR) (INCH/HR)         (ACRES)    NODE
     1        7.54    7.46    1.799  0.25( 0.03) 0.10       4.7      53.10
     2        6.11   15.54    1.181  0.25( 0.03) 0.10       5.9      50.00
 NEW PEAK FLOW DATA ARE:
 PEAK FLOW RATE(CFS) =       7.54  Tc(MIN.) =    7.46
 AREA-AVERAGED Fm(INCH/HR) =  0.03  AREA-AVERAGED Fp(INCH/HR) =  0.25
 AREA-AVERAGED Ap =  0.10  EFFECTIVE AREA(ACRES) =       4.72

****************************************************************************
 FLOW PROCESS FROM NODE     53.00 TO NODE     53.00 IS CODE =  81
----------------------------------------------------------------------------
 >>>>>ADDITION OF SUBAREA TO MAINLINE PEAK FLOW<<<<<
============================================================================
 MAINLINE Tc(MIN.) =    7.46
 *   2 YEAR RAINFALL INTENSITY(INCH/HR) =  1.799
 SUBAREA LOSS RATE DATA(AMC  I ):
  DEVELOPMENT TYPE/      SCS SOIL   AREA      Fp         Ap     SCS
      LAND USE            GROUP   (ACRES)  (INCH/HR)  (DECIMAL)  CN
 COMMERCIAL                C        4.24      0.25     0.100    50
 SUBAREA AVERAGE PERVIOUS LOSS RATE, Fp(INCH/HR) =  0.25
 SUBAREA AVERAGE PERVIOUS AREA FRACTION, Ap =  0.100
 SUBAREA AREA(ACRES) =    4.24      SUBAREA RUNOFF(CFS) =    6.77
 EFFECTIVE AREA(ACRES) =      8.96   AREA-AVERAGED Fm(INCH/HR) =  0.03
 AREA-AVERAGED Fp(INCH/HR) =  0.25  AREA-AVERAGED Ap =  0.10
 TOTAL AREA(ACRES) =       10.1       PEAK FLOW RATE(CFS) =      14.31

****************************************************************************
 FLOW PROCESS FROM NODE     53.00 TO NODE     54.00 IS CODE =  41
----------------------------------------------------------------------------
 >>>>>COMPUTE PIPE-FLOW TRAVEL TIME THRU SUBAREA<<<<<
 >>>>>USING USER-SPECIFIED PIPESIZE (EXISTING ELEMENT)<<<<<
============================================================================
 ELEVATION DATA: UPSTREAM(FEET) =    30.40  DOWNSTREAM(FEET) =    29.00
 FLOW LENGTH(FEET) =   255.00   MANNING'S N =  0.013
 ASSUME FULL-FLOWING PIPELINE
 PIPE-FLOW VELOCITY(FEET/SEC.) =  18.22
 PIPE FLOW VELOCITY = (TOTAL FLOW)/(PIPE CROSS SECTION AREA)
 GIVEN PIPE DIAMETER(INCH) =  12.00    NUMBER OF PIPES =   1
 PIPE-FLOW(CFS) =      14.31
 PIPE TRAVEL TIME(MIN.) =   0.23    Tc(MIN.) =    7.69
```

```
 LONGEST FLOWPATH FROM NODE     50.00 TO NODE     54.00 =    1306.00 FEET.

****************************************************************************
 FLOW PROCESS FROM NODE     54.00 TO NODE     54.00 IS CODE =   1
----------------------------------------------------------------------------
 >>>>>DESIGNATE INDEPENDENT STREAM FOR CONFLUENCE<<<<<
============================================================================
 TOTAL NUMBER OF STREAMS =  2
 CONFLUENCE VALUES USED FOR INDEPENDENT STREAM  1 ARE:
 TIME OF CONCENTRATION(MIN.) =    7.69
 RAINFALL INTENSITY(INCH/HR) =   1.77
 AREA-AVERAGED Fm(INCH/HR) =  0.03
 AREA-AVERAGED Fp(INCH/HR) =  0.25
 AREA-AVERAGED Ap =  0.10
 EFFECTIVE STREAM AREA(ACRES) =       8.96
 TOTAL STREAM AREA(ACRES) =      10.11
 PEAK FLOW RATE(CFS) AT CONFLUENCE =      14.31

****************************************************************************
 FLOW PROCESS FROM NODE     54.10 TO NODE     54.00 IS CODE =  21
----------------------------------------------------------------------------
 >>>>>RATIONAL METHOD INITIAL SUBAREA ANALYSIS<<<<<
 >>USE TIME-OF-CONCENTRATION NOMOGRAPH FOR INITIAL SUBAREA<<
============================================================================
 INITIAL SUBAREA FLOW-LENGTH(FEET) =   303.00
 ELEVATION DATA: UPSTREAM(FEET) =     36.40  DOWNSTREAM(FEET) =     32.40

 Tc = K*[(LENGTH** 3.00)/(ELEVATION CHANGE)]**0.20
 SUBAREA ANALYSIS USED MINIMUM Tc(MIN.) =    7.101
 *   2 YEAR RAINFALL INTENSITY(INCH/HR) =  1.851
 SUBAREA Tc AND LOSS RATE DATA(AMC  I ):
  DEVELOPMENT TYPE/      SCS SOIL   AREA      Fp         Ap     SCS   Tc
      LAND USE            GROUP   (ACRES)  (INCH/HR)  (DECIMAL)  CN  (MIN.)
 COMMERCIAL                 C        2.57      0.25     0.100    50    7.10
 SUBAREA AVERAGE PERVIOUS LOSS RATE, Fp(INCH/HR) =  0.25
 SUBAREA AVERAGE PERVIOUS AREA FRACTION, Ap =  0.100
 SUBAREA RUNOFF(CFS) =      4.22
 TOTAL AREA(ACRES) =      2.57   PEAK FLOW RATE(CFS) =      4.22

****************************************************************************
 FLOW PROCESS FROM NODE     54.00 TO NODE     54.00 IS CODE =   1
----------------------------------------------------------------------------
 >>>>>DESIGNATE INDEPENDENT STREAM FOR CONFLUENCE<<<<<
 >>>>>AND COMPUTE VARIOUS CONFLUENCED STREAM VALUES<<<<<
============================================================================
 TOTAL NUMBER OF STREAMS =  2
 CONFLUENCE VALUES USED FOR INDEPENDENT STREAM  2 ARE:
 TIME OF CONCENTRATION(MIN.) =    7.10
 RAINFALL INTENSITY(INCH/HR) =   1.85
 AREA-AVERAGED Fm(INCH/HR) =  0.03
 AREA-AVERAGED Fp(INCH/HR) =  0.25
 AREA-AVERAGED Ap =  0.10
 EFFECTIVE STREAM AREA(ACRES) =       2.57
 TOTAL STREAM AREA(ACRES) =       2.57
 PEAK FLOW RATE(CFS) AT CONFLUENCE =       4.22

 ** CONFLUENCE DATA **
  STREAM       Q      Tc   Intensity   Fp(Fm)     Ap     Ae     HEADWATER
  NUMBER     (CFS)  (MIN.) (INCH/HR) (INCH/HR)         (ACRES)    NODE
     1       14.31    7.69    1.768  0.25( 0.03) 0.10       9.0      53.10
     1       10.52   15.86    1.167  0.25( 0.03) 0.10      10.1      50.00
     2        4.22    7.10    1.851  0.25( 0.03) 0.10       2.6      54.10
```

```
  RAINFALL INTENSITY AND TIME OF CONCENTRATION RATIO
  CONFLUENCE FORMULA USED FOR  2 STREAMS.

  ** PEAK FLOW RATE TABLE **
   STREAM       Q      Tc   Intensity   Fp(Fm)     Ap     Ae     HEADWATER
   NUMBER     (CFS)  (MIN.) (INCH/HR) (INCH/HR)         (ACRES)    NODE
      1       18.06    7.10    1.851  0.25( 0.03) 0.10      10.8      54.10
      2       18.34    7.69    1.768  0.25( 0.03) 0.10      11.5      53.10
      3       13.16   15.86    1.167  0.25( 0.03) 0.10      12.7      50.00

  COMPUTED CONFLUENCE ESTIMATES ARE AS FOLLOWS:
  PEAK FLOW RATE(CFS) =      18.34    Tc(MIN.) =     7.69
  EFFECTIVE AREA(ACRES) =      11.53   AREA-AVERAGED Fm(INCH/HR) =  0.03
  AREA-AVERAGED Fp(INCH/HR) =  0.25  AREA-AVERAGED Ap =  0.10
  TOTAL AREA(ACRES) =       12.7
  LONGEST FLOWPATH FROM NODE     50.00 TO NODE     54.00 =    1306.00 FEET.

****************************************************************************
  FLOW PROCESS FROM NODE     54.00 TO NODE     55.00 IS CODE =  41
----------------------------------------------------------------------------
  >>>>>COMPUTE PIPE-FLOW TRAVEL TIME THRU SUBAREA<<<<<
  >>>>>USING USER-SPECIFIED PIPESIZE (EXISTING ELEMENT)<<<<<
============================================================================
  ELEVATION DATA: UPSTREAM(FEET) =    29.00  DOWNSTREAM(FEET) =    28.00
  FLOW LENGTH(FEET) =   254.00   MANNING'S N =  0.013
  ASSUME FULL-FLOWING PIPELINE
  PIPE-FLOW VELOCITY(FEET/SEC.) =  23.35
  PIPE FLOW VELOCITY = (TOTAL FLOW)/(PIPE CROSS SECTION AREA)
  GIVEN PIPE DIAMETER(INCH) =  12.00    NUMBER OF PIPES =   1
  PIPE-FLOW(CFS) =      18.34
  PIPE TRAVEL TIME(MIN.) =   0.18    Tc(MIN.) =    7.87
  LONGEST FLOWPATH FROM NODE     50.00 TO NODE     55.00 =    1560.00 FEET.

****************************************************************************
  FLOW PROCESS FROM NODE     55.00 TO NODE     55.00 IS CODE =   1
----------------------------------------------------------------------------
  >>>>>DESIGNATE INDEPENDENT STREAM FOR CONFLUENCE<<<<<
============================================================================
  TOTAL NUMBER OF STREAMS =  2
  CONFLUENCE VALUES USED FOR INDEPENDENT STREAM  1 ARE:
  TIME OF CONCENTRATION(MIN.) =    7.87
  RAINFALL INTENSITY(INCH/HR) =   1.74
  AREA-AVERAGED Fm(INCH/HR) =  0.03
  AREA-AVERAGED Fp(INCH/HR) =  0.25
  AREA-AVERAGED Ap =  0.10
  EFFECTIVE STREAM AREA(ACRES) =      11.53
  TOTAL STREAM AREA(ACRES) =      12.68
  PEAK FLOW RATE(CFS) AT CONFLUENCE =      18.34

****************************************************************************
  FLOW PROCESS FROM NODE     55.10 TO NODE     55.00 IS CODE =  21
----------------------------------------------------------------------------
  >>>>>RATIONAL METHOD INITIAL SUBAREA ANALYSIS<<<<<
  >>USE TIME-OF-CONCENTRATION NOMOGRAPH FOR INITIAL SUBAREA<<
============================================================================
  INITIAL SUBAREA FLOW-LENGTH(FEET) =   326.00
  ELEVATION DATA: UPSTREAM(FEET) =     35.70  DOWNSTREAM(FEET) =     33.10

  Tc = K*[(LENGTH** 3.00)/(ELEVATION CHANGE)]**0.20
  SUBAREA ANALYSIS USED MINIMUM Tc(MIN.) =    8.087
  *   2 YEAR RAINFALL INTENSITY(INCH/HR) =  1.718
```

```
  SUBAREA Tc AND LOSS RATE DATA(AMC  I ):
   DEVELOPMENT TYPE/      SCS SOIL   AREA      Fp         Ap     SCS   Tc
       LAND USE            GROUP   (ACRES)  (INCH/HR)  (DECIMAL)  CN  (MIN.)
  COMMERCIAL                 C        2.01      0.25     0.100    50    8.09
  SUBAREA AVERAGE PERVIOUS LOSS RATE, Fp(INCH/HR) =  0.25
  SUBAREA AVERAGE PERVIOUS AREA FRACTION, Ap =  0.100
  SUBAREA RUNOFF(CFS) =      3.06
  TOTAL AREA(ACRES) =      2.01   PEAK FLOW RATE(CFS) =      3.06

****************************************************************************
  FLOW PROCESS FROM NODE     55.00 TO NODE     55.00 IS CODE =   1
----------------------------------------------------------------------------
  >>>>>DESIGNATE INDEPENDENT STREAM FOR CONFLUENCE<<<<<
  >>>>>AND COMPUTE VARIOUS CONFLUENCED STREAM VALUES<<<<<
============================================================================
  TOTAL NUMBER OF STREAMS =  2
  CONFLUENCE VALUES USED FOR INDEPENDENT STREAM  2 ARE:
  TIME OF CONCENTRATION(MIN.) =    8.09
  RAINFALL INTENSITY(INCH/HR) =   1.72
  AREA-AVERAGED Fm(INCH/HR) =  0.03
  AREA-AVERAGED Fp(INCH/HR) =  0.25
  AREA-AVERAGED Ap =  0.10
  EFFECTIVE STREAM AREA(ACRES) =       2.01
  TOTAL STREAM AREA(ACRES) =       2.01
  PEAK FLOW RATE(CFS) AT CONFLUENCE =       3.06

  ** CONFLUENCE DATA **
   STREAM       Q      Tc   Intensity   Fp(Fm)     Ap     Ae     HEADWATER
   NUMBER     (CFS)  (MIN.) (INCH/HR) (INCH/HR)          (ACRES)    NODE
      1       18.06    7.29    1.824  0.25( 0.03) 0.10      10.8      54.10
      1       18.34    7.87    1.744  0.25( 0.03) 0.10      11.5      53.10
      1       13.16   16.11    1.156  0.25( 0.03) 0.10      12.7      50.00
      2        3.06    8.09    1.718  0.25( 0.03) 0.10       2.0      55.10

  RAINFALL INTENSITY AND TIME OF CONCENTRATION RATIO
  CONFLUENCE FORMULA USED FOR  2 STREAMS.

  ** PEAK FLOW RATE TABLE **
   STREAM       Q      Tc   Intensity   Fp(Fm)     Ap     Ae     HEADWATER
   NUMBER     (CFS)  (MIN.) (INCH/HR) (INCH/HR)          (ACRES)    NODE
      1       20.99    7.29    1.824  0.25( 0.03) 0.10      12.7      54.10
      2       21.37    7.87    1.744  0.25( 0.03) 0.10      13.5      53.10
      3       21.27    8.09    1.718  0.25( 0.03) 0.10      13.6      55.10
      4       15.20   16.11    1.156  0.25( 0.03) 0.10      14.7      50.00

  COMPUTED CONFLUENCE ESTIMATES ARE AS FOLLOWS:
  PEAK FLOW RATE(CFS) =      21.37    Tc(MIN.) =     7.87
  EFFECTIVE AREA(ACRES) =      13.49   AREA-AVERAGED Fm(INCH/HR) =  0.03
  AREA-AVERAGED Fp(INCH/HR) =  0.25  AREA-AVERAGED Ap =  0.10
  TOTAL AREA(ACRES) =       14.7
  LONGEST FLOWPATH FROM NODE     50.00 TO NODE     55.00 =    1560.00 FEET.

****************************************************************************
  FLOW PROCESS FROM NODE     55.00 TO NODE     55.00 IS CODE =  81
----------------------------------------------------------------------------
  >>>>>ADDITION OF SUBAREA TO MAINLINE PEAK FLOW<<<<<
============================================================================
  MAINLINE Tc(MIN.) =    7.87
  *   2 YEAR RAINFALL INTENSITY(INCH/HR) =  1.744
  SUBAREA LOSS RATE DATA(AMC  I ):
   DEVELOPMENT TYPE/      SCS SOIL   AREA      Fp         Ap     SCS
       LAND USE            GROUP   (ACRES)  (INCH/HR)  (DECIMAL)  CN
```

```
  COMMERCIAL                 C        0.91      0.25     0.100    50
  SUBAREA AVERAGE PERVIOUS LOSS RATE, Fp(INCH/HR) =  0.25
  SUBAREA AVERAGE PERVIOUS AREA FRACTION, Ap =  0.100
  SUBAREA AREA(ACRES) =    0.91      SUBAREA RUNOFF(CFS) =    1.41
  EFFECTIVE AREA(ACRES) =     14.40   AREA-AVERAGED Fm(INCH/HR) =  0.03
  AREA-AVERAGED Fp(INCH/HR) =  0.25  AREA-AVERAGED Ap =  0.10
  TOTAL AREA(ACRES) =       15.6       PEAK FLOW RATE(CFS) =      22.28

****************************************************************************
  FLOW PROCESS FROM NODE     55.00 TO NODE     56.00 IS CODE =  41
----------------------------------------------------------------------------
  >>>>>COMPUTE PIPE-FLOW TRAVEL TIME THRU SUBAREA<<<<<
  >>>>>USING USER-SPECIFIED PIPESIZE (EXISTING ELEMENT)<<<<<
============================================================================
  ELEVATION DATA: UPSTREAM(FEET) =    28.00  DOWNSTREAM(FEET) =    27.40
  FLOW LENGTH(FEET) =   145.00   MANNING'S N =  0.013
  ASSUME FULL-FLOWING PIPELINE
  PIPE-FLOW VELOCITY(FEET/SEC.) =  28.37
  PIPE FLOW VELOCITY = (TOTAL FLOW)/(PIPE CROSS SECTION AREA)
  GIVEN PIPE DIAMETER(INCH) =  12.00    NUMBER OF PIPES =   1
  PIPE-FLOW(CFS) =      22.28
  PIPE TRAVEL TIME(MIN.) =   0.09    Tc(MIN.) =    7.96
  LONGEST FLOWPATH FROM NODE     50.00 TO NODE     56.00 =    1705.00 FEET.

****************************************************************************
  FLOW PROCESS FROM NODE     56.00 TO NODE     56.00 IS CODE =   1
----------------------------------------------------------------------------
  >>>>>DESIGNATE INDEPENDENT STREAM FOR CONFLUENCE<<<<<
============================================================================
  TOTAL NUMBER OF STREAMS =  2
  CONFLUENCE VALUES USED FOR INDEPENDENT STREAM  1 ARE:
  TIME OF CONCENTRATION(MIN.) =    7.96
  RAINFALL INTENSITY(INCH/HR) =   1.73
  AREA-AVERAGED Fm(INCH/HR) =  0.03
  AREA-AVERAGED Fp(INCH/HR) =  0.25
  AREA-AVERAGED Ap =  0.10
  EFFECTIVE STREAM AREA(ACRES) =      14.40
  TOTAL STREAM AREA(ACRES) =      15.60
  PEAK FLOW RATE(CFS) AT CONFLUENCE =      22.28

****************************************************************************
  FLOW PROCESS FROM NODE     57.00 TO NODE     58.00 IS CODE =  21
----------------------------------------------------------------------------
  >>>>>RATIONAL METHOD INITIAL SUBAREA ANALYSIS<<<<<
  >>USE TIME-OF-CONCENTRATION NOMOGRAPH FOR INITIAL SUBAREA<<
============================================================================
  INITIAL SUBAREA FLOW-LENGTH(FEET) =   323.00
  ELEVATION DATA: UPSTREAM(FEET) =     36.20  DOWNSTREAM(FEET) =     33.70

  Tc = K*[(LENGTH** 3.00)/(ELEVATION CHANGE)]**0.20
  SUBAREA ANALYSIS USED MINIMUM Tc(MIN.) =    8.106
  *   2 YEAR RAINFALL INTENSITY(INCH/HR) =  1.715
  SUBAREA Tc AND LOSS RATE DATA(AMC  I ):
   DEVELOPMENT TYPE/       SCS SOIL   AREA      Fp         Ap      SCS   Tc
        LAND USE             GROUP   (ACRES)  (INCH/HR)  (DECIMAL)  CN  (MIN.)
  COMMERCIAL                   C        0.91      0.25     0.100    50    8.11
  SUBAREA AVERAGE PERVIOUS LOSS RATE, Fp(INCH/HR) =  0.25
  SUBAREA AVERAGE PERVIOUS AREA FRACTION, Ap =  0.100
  SUBAREA RUNOFF(CFS) =      1.38
  TOTAL AREA(ACRES) =      0.91   PEAK FLOW RATE(CFS) =      1.38

****************************************************************************
```

```
 FLOW PROCESS FROM NODE     58.00 TO NODE     59.00 IS CODE =  91
----------------------------------------------------------------------------
 >>>>>COMPUTE "V" GUTTER FLOW TRAVEL TIME THRU SUBAREA<<<<<
============================================================================
 UPSTREAM NODE ELEVATION(FEET) =     33.70
 DOWNSTREAM NODE ELEVATION(FEET) =     32.50
 CHANNEL LENGTH THRU SUBAREA(FEET) =   255.00
 "V" GUTTER WIDTH(FEET) =   5.00   GUTTER HIKE(FEET) =  0.050
 PAVEMENT LIP(FEET) =  0.010   MANNING'S N = .0150
 PAVEMENT CROSSFALL(DECIMAL NOTATION) = 0.02000
 MAXIMUM DEPTH(FEET) =  10.00
 *   2 YEAR RAINFALL INTENSITY(INCH/HR) =  1.447
 SUBAREA LOSS RATE DATA(AMC  I ):
  DEVELOPMENT TYPE/      SCS SOIL   AREA      Fp         Ap     SCS
      LAND USE            GROUP   (ACRES)  (INCH/HR)  (DECIMAL)  CN
 COMMERCIAL                 C        1.52      0.25     0.100    50
 SUBAREA AVERAGE PERVIOUS LOSS RATE, Fp(INCH/HR) =  0.25
 SUBAREA AVERAGE PERVIOUS AREA FRACTION, Ap =  0.100
 TRAVEL TIME COMPUTED USING ESTIMATED FLOW(CFS) =      2.35
 TRAVEL TIME THRU SUBAREA BASED ON VELOCITY(FEET/SEC.) =   1.52
 AVERAGE FLOW DEPTH(FEET) =   0.18   FLOOD WIDTH(FEET) =   17.32
 "V" GUTTER FLOW TRAVEL TIME(MIN.) =   2.80   Tc(MIN.) =   10.90
 SUBAREA AREA(ACRES) =    1.52       SUBAREA RUNOFF(CFS) =    1.95
 EFFECTIVE AREA(ACRES) =    2.43     AREA-AVERAGED Fm(INCH/HR) =   0.02
 AREA-AVERAGED Fp(INCH/HR) =   0.25  AREA-AVERAGED Ap =   0.10
 TOTAL AREA(ACRES) =        2.4         PEAK FLOW RATE(CFS) =       3.11

 END OF SUBAREA "V" GUTTER HYDRAULICS:
 DEPTH(FEET) =  0.20   FLOOD WIDTH(FEET) =   19.26
 FLOW VELOCITY(FEET/SEC.) =   1.63   DEPTH*VELOCITY(FT*FT/SEC) =   0.33
 LONGEST FLOWPATH FROM NODE     57.00 TO NODE     59.00 =     578.00 FEET.

****************************************************************************
 FLOW PROCESS FROM NODE     59.00 TO NODE     59.00 IS CODE =  81
----------------------------------------------------------------------------
 >>>>>ADDITION OF SUBAREA TO MAINLINE PEAK FLOW<<<<<
============================================================================
 MAINLINE Tc(MIN.) =   10.90
 *   2 YEAR RAINFALL INTENSITY(INCH/HR) =  1.447
 SUBAREA LOSS RATE DATA(AMC  I ):
  DEVELOPMENT TYPE/      SCS SOIL   AREA      Fp         Ap     SCS
      LAND USE            GROUP   (ACRES)  (INCH/HR)  (DECIMAL)  CN
 COMMERCIAL                 C        0.99      0.25     0.100    50
 SUBAREA AVERAGE PERVIOUS LOSS RATE, Fp(INCH/HR) =  0.25
 SUBAREA AVERAGE PERVIOUS AREA FRACTION, Ap =  0.100
 SUBAREA AREA(ACRES) =    0.99      SUBAREA RUNOFF(CFS) =    1.27
 EFFECTIVE AREA(ACRES) =      3.42   AREA-AVERAGED Fm(INCH/HR) =  0.03
 AREA-AVERAGED Fp(INCH/HR) =  0.25  AREA-AVERAGED Ap =  0.10
 TOTAL AREA(ACRES) =        3.4       PEAK FLOW RATE(CFS) =       4.38

****************************************************************************
 FLOW PROCESS FROM NODE     59.00 TO NODE     56.00 IS CODE =  41
----------------------------------------------------------------------------
 >>>>>COMPUTE PIPE-FLOW TRAVEL TIME THRU SUBAREA<<<<<
 >>>>>USING USER-SPECIFIED PIPESIZE (EXISTING ELEMENT)<<<<<
============================================================================
 ELEVATION DATA: UPSTREAM(FEET) =    28.00  DOWNSTREAM(FEET) =    27.40
 FLOW LENGTH(FEET) =    76.00   MANNING'S N =  0.013
 ASSUME FULL-FLOWING PIPELINE
 PIPE-FLOW VELOCITY(FEET/SEC.) =   5.57
 PIPE FLOW VELOCITY = (TOTAL FLOW)/(PIPE CROSS SECTION AREA)
 GIVEN PIPE DIAMETER(INCH) =  12.00    NUMBER OF PIPES =   1
```

```
  PIPE-FLOW(CFS) =       4.38
  PIPE TRAVEL TIME(MIN.) =   0.23    Tc(MIN.) =   11.13
  LONGEST FLOWPATH FROM NODE     57.00 TO NODE     56.00 =     654.00 FEET.

****************************************************************************
  FLOW PROCESS FROM NODE     56.00 TO NODE     56.00 IS CODE =   1
----------------------------------------------------------------------------
  >>>>>DESIGNATE INDEPENDENT STREAM FOR CONFLUENCE<<<<<
  >>>>>AND COMPUTE VARIOUS CONFLUENCED STREAM VALUES<<<<<
============================================================================
  TOTAL NUMBER OF STREAMS =  2
  CONFLUENCE VALUES USED FOR INDEPENDENT STREAM  2 ARE:
  TIME OF CONCENTRATION(MIN.) =   11.13
  RAINFALL INTENSITY(INCH/HR) =   1.43
  AREA-AVERAGED Fm(INCH/HR) =  0.03
  AREA-AVERAGED Fp(INCH/HR) =  0.25
  AREA-AVERAGED Ap =  0.10
  EFFECTIVE STREAM AREA(ACRES) =       3.42
  TOTAL STREAM AREA(ACRES) =       3.42
  PEAK FLOW RATE(CFS) AT CONFLUENCE =       4.38

  ** CONFLUENCE DATA **
   STREAM       Q      Tc   Intensity   Fp(Fm)     Ap     Ae     HEADWATER
   NUMBER     (CFS)  (MIN.) (INCH/HR) (INCH/HR)         (ACRES)    NODE
      1       21.96    7.37    1.812  0.25( 0.03) 0.10      13.6      54.10
      1       22.28    7.96    1.734  0.25( 0.03) 0.10      14.4      53.10
      1       22.06    8.17    1.707  0.25( 0.03) 0.10      14.5      55.10
      1       15.89   16.23    1.152  0.25( 0.03) 0.10      15.6      50.00
      2        4.38   11.13    1.430  0.25( 0.03) 0.10       3.4      57.00

  RAINFALL INTENSITY AND TIME OF CONCENTRATION RATIO
  CONFLUENCE FORMULA USED FOR  2 STREAMS.

  ** PEAK FLOW RATE TABLE **
   STREAM       Q      Tc   Intensity   Fp(Fm)     Ap     Ae     HEADWATER
   NUMBER     (CFS)  (MIN.) (INCH/HR) (INCH/HR)         (ACRES)    NODE
      1       25.64    7.37    1.812  0.25( 0.03) 0.10      15.8      54.10
      2       26.08    7.96    1.734  0.25( 0.03) 0.10      16.8      53.10
      3       25.91    8.17    1.707  0.25( 0.03) 0.10      17.0      55.10
      4       24.17   11.13    1.430  0.25( 0.02) 0.10      18.3      57.00
      5       19.40   16.23    1.152  0.25( 0.03) 0.10      19.0      50.00

  COMPUTED CONFLUENCE ESTIMATES ARE AS FOLLOWS:
  PEAK FLOW RATE(CFS) =      26.08    Tc(MIN.) =     7.96
  EFFECTIVE AREA(ACRES) =      16.84   AREA-AVERAGED Fm(INCH/HR) =  0.03
  AREA-AVERAGED Fp(INCH/HR) =  0.25  AREA-AVERAGED Ap =  0.10
  TOTAL AREA(ACRES) =       19.0
  LONGEST FLOWPATH FROM NODE     50.00 TO NODE     56.00 =    1705.00 FEET.

****************************************************************************
  FLOW PROCESS FROM NODE     56.00 TO NODE     60.00 IS CODE =  41
----------------------------------------------------------------------------
  >>>>>COMPUTE PIPE-FLOW TRAVEL TIME THRU SUBAREA<<<<<
  >>>>>USING USER-SPECIFIED PIPESIZE (EXISTING ELEMENT)<<<<<
============================================================================
  ELEVATION DATA: UPSTREAM(FEET) =    27.40  DOWNSTREAM(FEET) =    27.00
  FLOW LENGTH(FEET) =    86.00   MANNING'S N =  0.013
  ASSUME FULL-FLOWING PIPELINE
  PIPE-FLOW VELOCITY(FEET/SEC.) =  33.21
  PIPE FLOW VELOCITY = (TOTAL FLOW)/(PIPE CROSS SECTION AREA)
  GIVEN PIPE DIAMETER(INCH) =  12.00    NUMBER OF PIPES =   1
  PIPE-FLOW(CFS) =      26.08
```

```
  PIPE TRAVEL TIME(MIN.) =   0.04    Tc(MIN.) =    8.00
  LONGEST FLOWPATH FROM NODE     50.00 TO NODE     60.00 =    1791.00 FEET.

+----------------------------------------------------------------------------+
| AREA 'G'                                                                   |
|                                                                            |
|                                                                            |
+----------------------------------------------------------------------------+

****************************************************************************
  FLOW PROCESS FROM NODE     80.00 TO NODE     81.00 IS CODE =  21
----------------------------------------------------------------------------
  >>>>>RATIONAL METHOD INITIAL SUBAREA ANALYSIS<<<<<
  >>USE TIME-OF-CONCENTRATION NOMOGRAPH FOR INITIAL SUBAREA<<
============================================================================
  INITIAL SUBAREA FLOW-LENGTH(FEET) =   187.00
  ELEVATION DATA: UPSTREAM(FEET) =     36.00  DOWNSTREAM(FEET) =     32.90

  Tc = K*[(LENGTH** 3.00)/(ELEVATION CHANGE)]**0.20
  SUBAREA ANALYSIS USED MINIMUM Tc(MIN.) =    5.594
  *   2 YEAR RAINFALL INTENSITY(INCH/HR) =  2.122
  SUBAREA Tc AND LOSS RATE DATA(AMC  I ):
   DEVELOPMENT TYPE/      SCS SOIL   AREA      Fp         Ap     SCS   Tc
        LAND USE            GROUP   (ACRES)  (INCH/HR)  (DECIMAL)  CN  (MIN.)
  COMMERCIAL                  C        1.16      0.25     0.100    50    5.59
  SUBAREA AVERAGE PERVIOUS LOSS RATE, Fp(INCH/HR) =  0.25
  SUBAREA AVERAGE PERVIOUS AREA FRACTION, Ap =  0.100
  SUBAREA RUNOFF(CFS) =      2.19
  TOTAL AREA(ACRES) =      1.16   PEAK FLOW RATE(CFS) =      2.19

****************************************************************************
  FLOW PROCESS FROM NODE     81.00 TO NODE     82.00 IS CODE =  41
----------------------------------------------------------------------------
  >>>>>COMPUTE PIPE-FLOW TRAVEL TIME THRU SUBAREA<<<<<
  >>>>>USING USER-SPECIFIED PIPESIZE (EXISTING ELEMENT)<<<<<
============================================================================
  ELEVATION DATA: UPSTREAM(FEET) =    31.90  DOWNSTREAM(FEET) =    31.50
  FLOW LENGTH(FEET) =    93.00   MANNING'S N =  0.013
  DEPTH OF FLOW IN  12.0 INCH PIPE IS   9.7 INCHES
  PIPE-FLOW VELOCITY(FEET/SEC.) =   3.22
  GIVEN PIPE DIAMETER(INCH) =  12.00    NUMBER OF PIPES =   1
  PIPE-FLOW(CFS) =       2.19
  PIPE TRAVEL TIME(MIN.) =   0.48    Tc(MIN.) =    6.08
  LONGEST FLOWPATH FROM NODE     80.00 TO NODE     82.00 =     280.00 FEET.

+----------------------------------------------------------------------------+
| AREA 'C'                                                                   |
|                                                                            |
|                                                                            |
+----------------------------------------------------------------------------+

****************************************************************************
  FLOW PROCESS FROM NODE     90.00 TO NODE     91.00 IS CODE =  21
----------------------------------------------------------------------------
  >>>>>RATIONAL METHOD INITIAL SUBAREA ANALYSIS<<<<<
  >>USE TIME-OF-CONCENTRATION NOMOGRAPH FOR INITIAL SUBAREA<<
============================================================================
  INITIAL SUBAREA FLOW-LENGTH(FEET) =   330.00
  ELEVATION DATA: UPSTREAM(FEET) =     38.30  DOWNSTREAM(FEET) =     34.10

  Tc = K*[(LENGTH** 3.00)/(ELEVATION CHANGE)]**0.20
  SUBAREA ANALYSIS USED MINIMUM Tc(MIN.) =    7.402
```

```
  *   2 YEAR RAINFALL INTENSITY(INCH/HR) =  1.807
  SUBAREA Tc AND LOSS RATE DATA(AMC  I ):
   DEVELOPMENT TYPE/      SCS SOIL   AREA      Fp         Ap     SCS   Tc
       LAND USE            GROUP   (ACRES)  (INCH/HR)  (DECIMAL)  CN  (MIN.)
  COMMERCIAL                 C        0.77      0.25     0.100    50    7.40
  SUBAREA AVERAGE PERVIOUS LOSS RATE, Fp(INCH/HR) =  0.25
  SUBAREA AVERAGE PERVIOUS AREA FRACTION, Ap =  0.100
  SUBAREA RUNOFF(CFS) =      1.24
  TOTAL AREA(ACRES) =      0.77   PEAK FLOW RATE(CFS) =      1.24

+---------------------------------------------------------------------------+
| AREA 'D'                                                                  |
|                                                                           |
|                                                                           |
+---------------------------------------------------------------------------+

****************************************************************************
  FLOW PROCESS FROM NODE    100.00 TO NODE    101.00 IS CODE =  21
----------------------------------------------------------------------------
  >>>>>RATIONAL METHOD INITIAL SUBAREA ANALYSIS<<<<<
  >>USE TIME-OF-CONCENTRATION NOMOGRAPH FOR INITIAL SUBAREA<<
============================================================================
  INITIAL SUBAREA FLOW-LENGTH(FEET) =   290.00
  ELEVATION DATA: UPSTREAM(FEET) =     36.50  DOWNSTREAM(FEET) =     34.50

  Tc = K*[(LENGTH** 3.00)/(ELEVATION CHANGE)]**0.20
  SUBAREA ANALYSIS USED MINIMUM Tc(MIN.) =    7.945
  *   2 YEAR RAINFALL INTENSITY(INCH/HR) =  1.735
  SUBAREA Tc AND LOSS RATE DATA(AMC  I ):
   DEVELOPMENT TYPE/      SCS SOIL   AREA      Fp         Ap     SCS   Tc
       LAND USE            GROUP   (ACRES)  (INCH/HR)  (DECIMAL)  CN  (MIN.)
  COMMERCIAL                 C        0.77      0.25     0.100    50    7.95
  SUBAREA AVERAGE PERVIOUS LOSS RATE, Fp(INCH/HR) =  0.25
  SUBAREA AVERAGE PERVIOUS AREA FRACTION, Ap =  0.100
  SUBAREA RUNOFF(CFS) =      1.19
  TOTAL AREA(ACRES) =      0.77   PEAK FLOW RATE(CFS) =      1.19

+---------------------------------------------------------------------------+
| AREA 'I'                                                                  |
|                                                                           |
|                                                                           |
+---------------------------------------------------------------------------+

****************************************************************************
  FLOW PROCESS FROM NODE    110.00 TO NODE    111.00 IS CODE =  21
----------------------------------------------------------------------------
  >>>>>RATIONAL METHOD INITIAL SUBAREA ANALYSIS<<<<<
  >>USE TIME-OF-CONCENTRATION NOMOGRAPH FOR INITIAL SUBAREA<<
============================================================================
  INITIAL SUBAREA FLOW-LENGTH(FEET) =   299.00
  ELEVATION DATA: UPSTREAM(FEET) =     39.00  DOWNSTREAM(FEET) =     35.00

  Tc = K*[(LENGTH** 3.00)/(ELEVATION CHANGE)]**0.20
  SUBAREA ANALYSIS USED MINIMUM Tc(MIN.) =    7.045
  *   2 YEAR RAINFALL INTENSITY(INCH/HR) =  1.859
  SUBAREA Tc AND LOSS RATE DATA(AMC  I ):
   DEVELOPMENT TYPE/      SCS SOIL   AREA      Fp         Ap     SCS   Tc
       LAND USE            GROUP   (ACRES)  (INCH/HR)  (DECIMAL)  CN  (MIN.)
  COMMERCIAL                 C        0.76      0.25     0.100    50    7.04
  SUBAREA AVERAGE PERVIOUS LOSS RATE, Fp(INCH/HR) =  0.25
  SUBAREA AVERAGE PERVIOUS AREA FRACTION, Ap =  0.100
  SUBAREA RUNOFF(CFS) =      1.25
```

```
  TOTAL AREA(ACRES) =      0.76   PEAK FLOW RATE(CFS) =      1.25
================================================================================
  END OF STUDY SUMMARY:
  TOTAL AREA(ACRES)     =        0.8  TC(MIN.) =      7.04
  EFFECTIVE AREA(ACRES) =      0.76  AREA-AVERAGED Fm(INCH/HR)=  0.03
  AREA-AVERAGED Fp(INCH/HR) =  0.25  AREA-AVERAGED Ap = 0.100
  PEAK FLOW RATE(CFS)   =       1.25
================================================================================
================================================================================
  END OF RATIONAL METHOD ANALYSIS
```

```
**************************************************************************
          NON-HOMOGENEOUS WATERSHED AREA-AVERAGED LOSS RATE (Fm)
                    AND LOW LOSS FRACTION ESTIMATIONS
==========================================================================
         (C) Copyright 1989-2014 Advanced Engineering Software (aes)
             Ver. 21.0  Release Date: 06/01/2014  License ID 1355

                            Analysis prepared by:

                              Fuscoe Engineering
                               16795 Von Karman
                                  Suite 100
                               Irvine, CA 92606

**************************************************************************
--------------------------------------------------------------------------

 Problem Descriptions:
  BRISTOL COMMONS
  2-YEAR HYDROGRAPH
  EXISTING CONDITION
==========================================================================
*** NON-HOMOGENEOUS WATERSHED AREA-AVERAGED LOSS RATE (Fm)
    AND LOW LOSS FRACTION ESTIMATIONS FOR AMC I:

    TOTAL 24-HOUR DURATION RAINFALL DEPTH =     2.05 (inches)

    SOIL-COVER     AREA      PERCENT OF    SCS CURVE    LOSS RATE
       TYPE      (Acres)   PERVIOUS AREA     NUMBER    Fp(in./hr.)    YIELD
         1         41.15       10.00       69.(AMC II)     0.250       0.801

    TOTAL AREA (Acres) =     41.15

    AREA-AVERAGED LOSS RATE, Fm (in./hr.) =  0.025

    AREA-AVERAGED LOW LOSS FRACTION, Y = 0.199
==========================================================================


**************************************************************************
                      SMALL AREA UNIT HYDROGRAPH MODEL
==========================================================================
         (C) Copyright 1989-2014 Advanced Engineering Software (aes)
             Ver. 21.0  Release Date: 06/01/2014  License ID 1355

                            Analysis prepared by:

                              Fuscoe Engineering
                               16795 Von Karman
                                  Suite 100
                               Irvine, CA 92606

**************************************************************************
--------------------------------------------------------------------------
```

Problem Descriptions:
BRISTOL COMMONS
2-YEAR STORM EVENT
EXISTING CONDITION (CALIB COEFF=0.8652)

RATIONAL METHOD CALIBRATION COEFFICIENT = 0.87
TOTAL CATCHMENT AREA(ACRES) = 41.15
SOIL-LOSS RATE, Fm,(INCH/HR) = 0.025
LOW LOSS FRACTION = 0.199
TIME OF CONCENTRATION(MIN.) = 8.85
SMALL AREA PEAK Q COMPUTED USING PEAK FLOW RATE FORMULA
ORANGE COUNTY "VALLEY" RAINFALL VALUES ARE USED
RETURN FREQUENCY(YEARS) = 2
5-MINUTE POINT RAINFALL VALUE(INCHES) = 0.19
30-MINUTE POINT RAINFALL VALUE(INCHES) = 0.40
1-HOUR POINT RAINFALL VALUE(INCHES) = 0.53
3-HOUR POINT RAINFALL VALUE(INCHES) = 0.89
6-HOUR POINT RAINFALL VALUE(INCHES) = 1.22
24-HOUR POINT RAINFALL VALUE(INCHES) = 2.05

TOTAL CATCHMENT RUNOFF VOLUME(ACRE-FEET) = 5.14
TOTAL CATCHMENT SOIL-LOSS VOLUME(ACRE-FEET) = 1.89

****

TIME (HOURS)	VOLUME (AF)	Q (CFS)	0.	15.0	30.0	45.0	60.0
0.07	0.0000	0.00	Q	.	.	.	.
0.22	0.0056	0.92	Q	.	.	.	.
0.36	0.0168	0.92	Q	.	.	.	.
0.51	0.0280	0.93	Q	.	.	.	.
0.66	0.0394	0.93	Q	.	.	.	.
0.81	0.0507	0.94	Q	.	.	.	.
0.95	0.0622	0.94	Q	.	.	.	.
1.10	0.0737	0.95	Q	.	.	.	.
1.25	0.0853	0.95	Q	.	.	.	.
1.40	0.0970	0.96	Q	.	.	.	.
1.54	0.1088	0.97	Q	.	.	.	.
1.69	0.1206	0.97	Q	.	.	.	.
1.84	0.1325	0.98	Q	.	.	.	.
1.99	0.1444	0.99	Q	.	.	.	.
2.13	0.1565	0.99	Q	.	.	.	.
2.28	0.1686	1.00	Q	.	.	.	.
2.43	0.1808	1.00	Q	.	.	.	.
2.58	0.1931	1.01	Q	.	.	.	.
2.72	0.2055	1.02	Q	.	.	.	.
2.87	0.2180	1.03	Q	.	.	.	.
3.02	0.2305	1.03	Q	.	.	.	.
3.17	0.2432	1.04	Q	.	.	.	.
3.31	0.2559	1.05	Q	.	.	.	.
3.46	0.2687	1.06	Q	.	.	.	.
3.61	0.2816	1.06	Q	.	.	.	.

3.76	0.2947	1.07	Q	.	.	.	.
3.90	0.3078	1.08	Q	.	.	.	.
4.05	0.3210	1.09	Q	.	.	.	.
4.20	0.3343	1.09	Q	.	.	.	.
4.35	0.3477	1.11	Q	.	.	.	.
4.49	0.3612	1.11	Q	.	.	.	.
4.64	0.3749	1.12	Q	.	.	.	.
4.79	0.3886	1.13	Q	.	.	.	.
4.94	0.4024	1.14	Q	.	.	.	.
5.08	0.4164	1.15	Q	.	.	.	.
5.23	0.4305	1.16	Q	.	.	.	.
5.38	0.4447	1.17	Q	.	.	.	.
5.53	0.4590	1.18	Q	.	.	.	.
5.67	0.4735	1.19	Q	.	.	.	.
5.82	0.4880	1.20	Q	.	.	.	.
5.97	0.5028	1.21	Q	.	.	.	.
6.12	0.5176	1.23	Q	.	.	.	.
6.26	0.5326	1.23	Q	.	.	.	.
6.41	0.5477	1.25	Q	.	.	.	.
6.56	0.5630	1.26	Q	.	.	.	.
6.71	0.5784	1.27	Q	.	.	.	.
6.86	0.5940	1.28	Q	.	.	.	.
7.00	0.6097	1.30	Q	.	.	.	.
7.15	0.6256	1.31	Q	.	.	.	.
7.30	0.6416	1.33	Q	.	.	.	.
7.44	0.6578	1.33	Q	.	.	.	.
7.59	0.6742	1.35	Q	.	.	.	.
7.74	0.6908	1.36	Q	.	.	.	.
7.89	0.7075	1.38	Q	.	.	.	.
8.03	0.7245	1.39	Q	.	.	.	.
8.18	0.7416	1.42	Q	.	.	.	.
8.33	0.7589	1.43	Q	.	.	.	.
8.48	0.7765	1.45	Q	.	.	.	.
8.62	0.7942	1.46	Q	.	.	.	.
8.77	0.8122	1.49	Q	.	.	.	.
8.92	0.8304	1.50	Q	.	.	.	.
9.07	0.8488	1.53	.Q	.	.	.	.
9.21	0.8675	1.54	.Q	.	.	.	.
9.36	0.8864	1.57	.Q	.	.	.	.
9.51	0.9056	1.58	.Q	.	.	.	.
9.66	0.9251	1.61	.Q	.	.	.	.
9.80	0.9448	1.63	.Q	.	.	.	.
9.95	0.9649	1.66	.Q	.	.	.	.
10.10	0.9852	1.68	.Q	.	.	.	.
10.25	1.0058	1.71	.Q	.	.	.	.
10.40	1.0268	1.73	.Q	.	.	.	.
10.54	1.0481	1.77	.Q	.	.	.	.
10.69	1.0698	1.79	.Q	.	.	.	.
10.84	1.0918	1.83	.Q	.	.	.	.
10.98	1.1143	1.85	.Q	.	.	.	.
11.13	1.1371	1.90	.Q	.	.	.	.
11.28	1.1604	1.92	.Q	.	.	.	.
11.43	1.1841	1.97	.Q	.	.	.	.
11.57	1.2082	2.00	.Q	.	.	.	.
11.72	1.2329	2.05	.Q	.	.	.	.
11.87	1.2581	2.08	.Q	.	.	.	.
12.02	1.2839	2.14	.Q	.	.	.	.

12.16	1.3121	2.49	.Q . . . .
12.31	1.3439	2.72	.Q . . . .
12.46	1.3773	2.76	.Q . . . .
12.61	1.4114	2.84	.Q . . . .
12.76	1.4463	2.89	.Q . . . .
12.90	1.4821	2.98	.Q . . . .
13.05	1.5188	3.03	. Q . . . .
13.20	1.5564	3.14	. Q . . . .
13.35	1.5951	3.20	. Q . . . .
13.49	1.6349	3.33	. Q . . . .
13.64	1.6760	3.40	. Q . . . .
13.79	1.7184	3.56	. Q . . . .
13.93	1.7624	3.66	. Q . . . .
14.08	1.8088	3.96	. Q . . . .
14.23	1.8586	4.21	. Q . . . .
14.38	1.9117	4.51	. Q . . . .
14.52	1.9676	4.68	. Q . . . .
14.67	2.0270	5.07	. Q . . . .
14.82	2.0902	5.30	. Q . . . .
14.97	2.1582	5.85	. Q . . . .
15.12	2.2315	6.18	. Q . . . .
15.26	2.3119	7.01	. Q . . . .
15.41	2.4007	7.56	. Q . . . .
15.56	2.4942	7.80	. Q . . . .
15.70	2.5960	8.90	. Q . . . .
15.85	2.7316	13.34	. Q . . . .
16.00	2.9257	18.51	. . Q . . .
16.15	3.3875	57.25	. . . . Q .
16.30	3.8010	10.60	. Q . . . .
16.44	3.9098	7.25	. Q . . . .
16.59	3.9939	6.56	. Q . . . .
16.74	4.0678	5.56	. Q . . . .
16.89	4.1313	4.86	. Q . . . .
17.03	4.1875	4.35	. Q . . . .
17.18	4.2370	3.77	. Q . . . .
17.33	4.2812	3.48	. Q . . . .
17.48	4.3223	3.27	. Q . . . .
17.62	4.3610	3.09	. Q . . . .
17.77	4.3977	2.93	.Q . . . .
17.92	4.4326	2.80	.Q . . . .
18.07	4.4660	2.68	.Q . . . .
18.21	4.4952	2.11	.Q . . . .
18.36	4.5205	2.02	.Q . . . .
18.51	4.5446	1.94	.Q . . . .
18.66	4.5679	1.87	.Q . . . .
18.80	4.5903	1.81	.Q . . . .
18.95	4.6120	1.75	.Q . . . .
19.10	4.6330	1.69	.Q . . . .
19.24	4.6533	1.64	.Q . . . .
19.39	4.6731	1.60	.Q . . . .
19.54	4.6923	1.55	.Q . . . .
19.69	4.7110	1.51	.Q . . . .
19.83	4.7292	1.47	Q . . . .
19.98	4.7469	1.44	Q . . . .
20.13	4.7642	1.41	Q . . . .
20.28	4.7812	1.37	Q . . . .
20.42	4.7978	1.34	Q . . . .

20.57	4.8140	1.32	Q	.	.	.	.
20.72	4.8299	1.29	Q	.	.	.	.
20.87	4.8454	1.26	Q	.	.	.	.
21.02	4.8607	1.24	Q	.	.	.	.
21.16	4.8757	1.22	Q	.	.	.	.
21.31	4.8904	1.20	Q	.	.	.	.
21.46	4.9048	1.18	Q	.	.	.	.
21.61	4.9190	1.16	Q	.	.	.	.
21.75	4.9330	1.14	Q	.	.	.	.
21.90	4.9467	1.12	Q	.	.	.	.
22.05	4.9603	1.10	Q	.	.	.	.
22.20	4.9736	1.08	Q	.	.	.	.
22.34	4.9867	1.07	Q	.	.	.	.
22.49	4.9996	1.05	Q	.	.	.	.
22.64	5.0123	1.04	Q	.	.	.	.
22.78	5.0249	1.02	Q	.	.	.	.
22.93	5.0373	1.01	Q	.	.	.	.
23.08	5.0495	1.00	Q	.	.	.	.
23.23	5.0615	0.98	Q	.	.	.	.
23.38	5.0734	0.97	Q	.	.	.	.
23.52	5.0852	0.96	Q	.	.	.	.
23.67	5.0968	0.95	Q	.	.	.	.
23.82	5.1082	0.93	Q	.	.	.	.
23.97	5.1196	0.92	Q	.	.	.	.
24.11	5.1308	0.91	Q	.	.	.	.
24.26	5.1363	0.00	Q	.	.	.	.

TIME DURATION(minutes) OF PERCENTILES OF ESTIMATED PEAK FLOW RATE:
(Note: 100% of Peak Flow Rate estimate assumed to have
an instantaneous time duration)

Percentile of Estimated Peak Flow Rate	Duration (minutes)
0%	1442.6
10%	106.2
20%	26.6
30%	17.7
40%	8.9
50%	8.9
60%	8.9
70%	8.9
80%	8.9
90%	8.9

```
**************************************************************************
            RATIONAL METHOD HYDROLOGY COMPUTER PROGRAM PACKAGE
           (Reference: 1986 ORANGE COUNTY HYDROLOGY CRITERION)
         (c) Copyright 1983-2014 Advanced Engineering Software (aes)
            Ver. 21.0  Release Date: 06/01/2014  License ID 1355

                          Analysis prepared by:

                            Fuscoe Engineering
                             16795 Von Karman
                                Suite 100
                             Irvine, CA 92606

 ************************ DESCRIPTION OF STUDY ************************
* RELATED BRISTOL                                                        *
* 2-YEAR STORM EVENT                                                     *
* PROPOSED CONDITION                                                     *
 **************************************************************************

  FILE NAME: BRIS2PR.DAT
  TIME/DATE OF STUDY: 09:11 02/02/2023
==========================================================================
  USER SPECIFIED HYDROLOGY AND HYDRAULIC MODEL INFORMATION:
==========================================================================
                    --*TIME-OF-CONCENTRATION MODEL*--

  USER SPECIFIED STORM EVENT(YEAR) =    2.00
  SPECIFIED MINIMUM PIPE SIZE(INCH) =   8.00
  SPECIFIED PERCENT OF GRADIENTS(DECIMAL) TO USE FOR FRICTION SLOPE = 0.90
  *DATA BANK RAINFALL USED*
  *ANTECEDENT MOISTURE CONDITION (AMC) I ASSUMED FOR RATIONAL METHOD*

  *USER-DEFINED STREET-SECTIONS FOR COUPLED PIPEFLOW AND STREETFLOW MODEL*
     HALF-  CROWN TO   STREET-CROSSFALL:   CURB  GUTTER-GEOMETRIES:  MANNING
     WIDTH  CROSSFALL  IN-  / OUT-/PARK-  HEIGHT  WIDTH  LIP   HIKE  FACTOR
NO.   (FT)     (FT)    SIDE / SIDE/ WAY    (FT)    (FT)  (FT)  (FT)    (n)
===  =====  =========  =================  ======  ===== ====== ===== =======
  1   30.0     20.0    0.018/0.018/0.020   0.67    2.00 0.0313 0.167 0.0150

  GLOBAL STREET FLOW-DEPTH CONSTRAINTS:
    1. Relative Flow-Depth =  0.00 FEET
       as (Maximum Allowable Street Flow Depth) - (Top-of-Curb)
    2. (Depth)*(Velocity) Constraint =  6.0 (FT*FT/S)
  *SIZE PIPE WITH A FLOW CAPACITY GREATER THAN
   OR EQUAL TO THE UPSTREAM TRIBUTARY PIPE.*
  *USER-SPECIFIED MINIMUM TOPOGRAPHIC SLOPE ADJUSTMENT NOT SELECTED

+--------------------------------------------------------------------------+
| AREA 'A'                                                                 |
|                                                                          |
|                                                                          |
+--------------------------------------------------------------------------+

**************************************************************************
  FLOW PROCESS FROM NODE     10.00 TO NODE     11.00 IS CODE =  21
--------------------------------------------------------------------------
  >>>>>RATIONAL METHOD INITIAL SUBAREA ANALYSIS<<<<<
  >>USE TIME-OF-CONCENTRATION NOMOGRAPH FOR INITIAL SUBAREA<<
==========================================================================
  INITIAL SUBAREA FLOW-LENGTH(FEET) =   327.00
  ELEVATION DATA: UPSTREAM(FEET) =     38.30  DOWNSTREAM(FEET) =     35.00
```

```
  Tc = K*[(LENGTH** 3.00)/(ELEVATION CHANGE)]**0.20
  SUBAREA ANALYSIS USED MINIMUM Tc(MIN.) =    7.725
  *   2 YEAR RAINFALL INTENSITY(INCH/HR) =  1.763
  SUBAREA Tc AND LOSS RATE DATA(AMC  I ):
   DEVELOPMENT TYPE/      SCS SOIL   AREA      Fp         Ap     SCS   Tc
        LAND USE            GROUP   (ACRES)  (INCH/HR)  (DECIMAL)  CN  (MIN.)
  COMMERCIAL                  C        1.71      0.25     0.100    50    7.73
  SUBAREA AVERAGE PERVIOUS LOSS RATE, Fp(INCH/HR) =  0.25
  SUBAREA AVERAGE PERVIOUS AREA FRACTION, Ap =  0.100
  SUBAREA RUNOFF(CFS) =      2.68
  TOTAL AREA(ACRES) =      1.71   PEAK FLOW RATE(CFS) =      2.68

+-------------------------------------------------------------------------+
| AREA 'B'                                                                |
|                                                                         |
|                                                                         |
+-------------------------------------------------------------------------+

****************************************************************************
  FLOW PROCESS FROM NODE     20.00 TO NODE     21.00 IS CODE =  21
----------------------------------------------------------------------------
  >>>>>RATIONAL METHOD INITIAL SUBAREA ANALYSIS<<<<<
  >>USE TIME-OF-CONCENTRATION NOMOGRAPH FOR INITIAL SUBAREA<<
============================================================================
  INITIAL SUBAREA FLOW-LENGTH(FEET) =   330.00
  ELEVATION DATA: UPSTREAM(FEET) =     35.40  DOWNSTREAM(FEET) =     31.40

  Tc = K*[(LENGTH** 3.00)/(ELEVATION CHANGE)]**0.20
  SUBAREA ANALYSIS USED MINIMUM Tc(MIN.) =    7.474
  *   2 YEAR RAINFALL INTENSITY(INCH/HR) =  1.797
  SUBAREA Tc AND LOSS RATE DATA(AMC  I ):
   DEVELOPMENT TYPE/      SCS SOIL   AREA      Fp         Ap     SCS   Tc
        LAND USE            GROUP   (ACRES)  (INCH/HR)  (DECIMAL)  CN  (MIN.)
  COMMERCIAL                  C        2.28      0.25     0.100    50    7.47
  SUBAREA AVERAGE PERVIOUS LOSS RATE, Fp(INCH/HR) =  0.25
  SUBAREA AVERAGE PERVIOUS AREA FRACTION, Ap =  0.100
  SUBAREA RUNOFF(CFS) =      3.64
  TOTAL AREA(ACRES) =      2.28   PEAK FLOW RATE(CFS) =      3.64

****************************************************************************
  FLOW PROCESS FROM NODE     21.00 TO NODE     21.00 IS CODE =   1
----------------------------------------------------------------------------
  >>>>>DESIGNATE INDEPENDENT STREAM FOR CONFLUENCE<<<<<
============================================================================
  TOTAL NUMBER OF STREAMS =  2
  CONFLUENCE VALUES USED FOR INDEPENDENT STREAM  1 ARE:
  TIME OF CONCENTRATION(MIN.) =    7.47
  RAINFALL INTENSITY(INCH/HR) =   1.80
  AREA-AVERAGED Fm(INCH/HR) =  0.03
  AREA-AVERAGED Fp(INCH/HR) =  0.25
  AREA-AVERAGED Ap =  0.10
  EFFECTIVE STREAM AREA(ACRES) =       2.28
  TOTAL STREAM AREA(ACRES) =       2.28
  PEAK FLOW RATE(CFS) AT CONFLUENCE =       3.64

****************************************************************************
  FLOW PROCESS FROM NODE     22.00 TO NODE     23.00 IS CODE =  21
----------------------------------------------------------------------------
  >>>>>RATIONAL METHOD INITIAL SUBAREA ANALYSIS<<<<<
  >>USE TIME-OF-CONCENTRATION NOMOGRAPH FOR INITIAL SUBAREA<<
============================================================================
```

```
 INITIAL SUBAREA FLOW-LENGTH(FEET) =   330.00
 ELEVATION DATA: UPSTREAM(FEET) =     35.20  DOWNSTREAM(FEET) =     33.60

 Tc = K*[(LENGTH** 3.00)/(ELEVATION CHANGE)]**0.20
 SUBAREA ANALYSIS USED MINIMUM Tc(MIN.) =    8.978
 *   2 YEAR RAINFALL INTENSITY(INCH/HR) =  1.618
 SUBAREA Tc AND LOSS RATE DATA(AMC  I ):
  DEVELOPMENT TYPE/      SCS SOIL   AREA      Fp         Ap     SCS   Tc
      LAND USE            GROUP   (ACRES)  (INCH/HR)  (DECIMAL)  CN  (MIN.)
 COMMERCIAL                 C        0.98      0.25     0.100    50    8.98
 SUBAREA AVERAGE PERVIOUS LOSS RATE, Fp(INCH/HR) =  0.25
 SUBAREA AVERAGE PERVIOUS AREA FRACTION, Ap =  0.100
 SUBAREA RUNOFF(CFS) =      1.40
 TOTAL AREA(ACRES) =      0.98   PEAK FLOW RATE(CFS) =      1.40

****************************************************************************
 FLOW PROCESS FROM NODE     23.00 TO NODE     21.00 IS CODE =  31
----------------------------------------------------------------------------
 >>>>>COMPUTE PIPE-FLOW TRAVEL TIME THRU SUBAREA<<<<<
 >>>>>USING COMPUTER-ESTIMATED PIPESIZE (NON-PRESSURE FLOW)<<<<<
============================================================================
 ELEVATION DATA: UPSTREAM(FEET) =    28.50  DOWNSTREAM(FEET) =    27.40
 FLOW LENGTH(FEET) =   351.00   MANNING'S N =  0.013
 DEPTH OF FLOW IN  12.0 INCH PIPE IS   7.7 INCHES
 PIPE-FLOW VELOCITY(FEET/SEC.) =   2.64
 ESTIMATED PIPE DIAMETER(INCH) =  12.00    NUMBER OF PIPES =   1
 PIPE-FLOW(CFS) =       1.40
 PIPE TRAVEL TIME(MIN.) =   2.22    Tc(MIN.) =   11.19
 LONGEST FLOWPATH FROM NODE     22.00 TO NODE     21.00 =     681.00 FEET.

****************************************************************************
 FLOW PROCESS FROM NODE     21.00 TO NODE     21.00 IS CODE =   1
----------------------------------------------------------------------------
 >>>>>DESIGNATE INDEPENDENT STREAM FOR CONFLUENCE<<<<<
 >>>>>AND COMPUTE VARIOUS CONFLUENCED STREAM VALUES<<<<<
============================================================================
 TOTAL NUMBER OF STREAMS =  2
 CONFLUENCE VALUES USED FOR INDEPENDENT STREAM  2 ARE:
 TIME OF CONCENTRATION(MIN.) =   11.19
 RAINFALL INTENSITY(INCH/HR) =   1.43
 AREA-AVERAGED Fm(INCH/HR) =  0.03
 AREA-AVERAGED Fp(INCH/HR) =  0.25
 AREA-AVERAGED Ap =  0.10
 EFFECTIVE STREAM AREA(ACRES) =       0.98
 TOTAL STREAM AREA(ACRES) =       0.98
 PEAK FLOW RATE(CFS) AT CONFLUENCE =       1.40

 ** CONFLUENCE DATA **
  STREAM       Q      Tc   Intensity   Fp(Fm)     Ap     Ae     HEADWATER
  NUMBER     (CFS)  (MIN.) (INCH/HR) (INCH/HR)         (ACRES)    NODE
     1        3.64    7.47    1.797  0.25( 0.03) 0.10       2.3      20.00
     2        1.40   11.19    1.425  0.25( 0.03) 0.10       1.0      22.00

 RAINFALL INTENSITY AND TIME OF CONCENTRATION RATIO
 CONFLUENCE FORMULA USED FOR  2 STREAMS.

 ** PEAK FLOW RATE TABLE **
  STREAM       Q      Tc   Intensity   Fp(Fm)     Ap     Ae     HEADWATER
  NUMBER     (CFS)  (MIN.) (INCH/HR) (INCH/HR)         (ACRES)    NODE
     1        4.82    7.47    1.797  0.25( 0.03) 0.10       2.9      20.00
     2        4.28   11.19    1.425  0.25( 0.03) 0.10       3.3      22.00
```

```
  COMPUTED CONFLUENCE ESTIMATES ARE AS FOLLOWS:
  PEAK FLOW RATE(CFS) =       4.82    Tc(MIN.) =     7.47
  EFFECTIVE AREA(ACRES) =       2.93   AREA-AVERAGED Fm(INCH/HR) =  0.03
  AREA-AVERAGED Fp(INCH/HR) =  0.25  AREA-AVERAGED Ap =  0.10
  TOTAL AREA(ACRES) =        3.3
  LONGEST FLOWPATH FROM NODE     22.00 TO NODE     21.00 =     681.00 FEET.

****************************************************************************
  FLOW PROCESS FROM NODE     21.00 TO NODE     21.00 IS CODE =  81
----------------------------------------------------------------------------
  >>>>>ADDITION OF SUBAREA TO MAINLINE PEAK FLOW<<<<<
============================================================================
  MAINLINE Tc(MIN.) =    7.47
  *   2 YEAR RAINFALL INTENSITY(INCH/HR) =  1.797
  SUBAREA LOSS RATE DATA(AMC  I ):
   DEVELOPMENT TYPE/      SCS SOIL   AREA      Fp         Ap     SCS
       LAND USE            GROUP   (ACRES)  (INCH/HR)  (DECIMAL)  CN
  PUBLIC PARK               C        1.09      0.25     0.850    50
  SUBAREA AVERAGE PERVIOUS LOSS RATE, Fp(INCH/HR) =  0.25
  SUBAREA AVERAGE PERVIOUS AREA FRACTION, Ap =  0.850
  SUBAREA AREA(ACRES) =    1.09      SUBAREA RUNOFF(CFS) =    1.55
  EFFECTIVE AREA(ACRES) =      4.02   AREA-AVERAGED Fm(INCH/HR) =  0.08
  AREA-AVERAGED Fp(INCH/HR) =  0.25  AREA-AVERAGED Ap =  0.30
  TOTAL AREA(ACRES) =        4.3       PEAK FLOW RATE(CFS) =       6.23

****************************************************************************
  FLOW PROCESS FROM NODE     21.00 TO NODE     24.00 IS CODE =  31
----------------------------------------------------------------------------
  >>>>>COMPUTE PIPE-FLOW TRAVEL TIME THRU SUBAREA<<<<<
  >>>>>USING COMPUTER-ESTIMATED PIPESIZE (NON-PRESSURE FLOW)<<<<<
============================================================================
  ELEVATION DATA: UPSTREAM(FEET) =    27.40  DOWNSTREAM(FEET) =    26.10
  FLOW LENGTH(FEET) =   442.00   MANNING'S N =  0.013
  DEPTH OF FLOW IN  21.0 INCH PIPE IS  13.8 INCHES
  PIPE-FLOW VELOCITY(FEET/SEC.) =   3.73
  ESTIMATED PIPE DIAMETER(INCH) =  21.00    NUMBER OF PIPES =   1
  PIPE-FLOW(CFS) =       6.23
  PIPE TRAVEL TIME(MIN.) =   1.97    Tc(MIN.) =    9.45
  LONGEST FLOWPATH FROM NODE     22.00 TO NODE     24.00 =    1123.00 FEET.

****************************************************************************
  FLOW PROCESS FROM NODE     24.00 TO NODE     24.00 IS CODE =  10
----------------------------------------------------------------------------
  >>>>>MAIN-STREAM MEMORY COPIED ONTO MEMORY BANK # 1 <<<<<
============================================================================

****************************************************************************
  FLOW PROCESS FROM NODE     25.00 TO NODE     26.00 IS CODE =  21
----------------------------------------------------------------------------
  >>>>>RATIONAL METHOD INITIAL SUBAREA ANALYSIS<<<<<
  >>USE TIME-OF-CONCENTRATION NOMOGRAPH FOR INITIAL SUBAREA<<
============================================================================
  INITIAL SUBAREA FLOW-LENGTH(FEET) =   316.00
  ELEVATION DATA: UPSTREAM(FEET) =     36.70  DOWNSTREAM(FEET) =     33.50

  Tc = K*[(LENGTH** 3.00)/(ELEVATION CHANGE)]**0.20
  SUBAREA ANALYSIS USED MINIMUM Tc(MIN.) =    7.615
  *   2 YEAR RAINFALL INTENSITY(INCH/HR) =  1.778
  SUBAREA Tc AND LOSS RATE DATA(AMC  I ):
   DEVELOPMENT TYPE/      SCS SOIL   AREA      Fp         Ap     SCS   Tc
       LAND USE            GROUP   (ACRES)  (INCH/HR)  (DECIMAL)  CN  (MIN.)
  COMMERCIAL                C        1.26      0.25     0.100    50    7.61
```

```
  SUBAREA AVERAGE PERVIOUS LOSS RATE, Fp(INCH/HR) =  0.25
  SUBAREA AVERAGE PERVIOUS AREA FRACTION, Ap =  0.100
  SUBAREA RUNOFF(CFS) =      1.99
  TOTAL AREA(ACRES) =      1.26   PEAK FLOW RATE(CFS) =      1.99

****************************************************************************
  FLOW PROCESS FROM NODE     26.00 TO NODE     27.00 IS CODE =  31
----------------------------------------------------------------------------
  >>>>>COMPUTE PIPE-FLOW TRAVEL TIME THRU SUBAREA<<<<<
  >>>>>USING COMPUTER-ESTIMATED PIPESIZE (NON-PRESSURE FLOW)<<<<<
============================================================================
  ELEVATION DATA: UPSTREAM(FEET) =    30.30  DOWNSTREAM(FEET) =    29.20
  FLOW LENGTH(FEET) =   373.00   MANNING'S N =  0.013
  DEPTH OF FLOW IN  15.0 INCH PIPE IS   8.4 INCHES
  PIPE-FLOW VELOCITY(FEET/SEC.) =   2.83
  ESTIMATED PIPE DIAMETER(INCH) =  15.00    NUMBER OF PIPES =   1
  PIPE-FLOW(CFS) =       1.99
  PIPE TRAVEL TIME(MIN.) =   2.20    Tc(MIN.) =    9.81
  LONGEST FLOWPATH FROM NODE     25.00 TO NODE     27.00 =     689.00 FEET.

****************************************************************************
  FLOW PROCESS FROM NODE     27.00 TO NODE     27.00 IS CODE =  81
----------------------------------------------------------------------------
  >>>>>ADDITION OF SUBAREA TO MAINLINE PEAK FLOW<<<<<
============================================================================
  MAINLINE Tc(MIN.) =    9.81
  *   2 YEAR RAINFALL INTENSITY(INCH/HR) =  1.537
  SUBAREA LOSS RATE DATA(AMC  I ):
   DEVELOPMENT TYPE/      SCS SOIL   AREA      Fp          Ap     SCS
       LAND USE            GROUP   (ACRES)  (INCH/HR)  (DECIMAL)  CN
  COMMERCIAL                 C        1.06      0.25     0.100    50
  SUBAREA AVERAGE PERVIOUS LOSS RATE, Fp(INCH/HR) =  0.25
  SUBAREA AVERAGE PERVIOUS AREA FRACTION, Ap =  0.100
  SUBAREA AREA(ACRES) =    1.06      SUBAREA RUNOFF(CFS) =    1.44
  EFFECTIVE AREA(ACRES) =      2.32   AREA-AVERAGED Fm(INCH/HR) =  0.03
  AREA-AVERAGED Fp(INCH/HR) =  0.25  AREA-AVERAGED Ap =  0.10
  TOTAL AREA(ACRES) =        2.3       PEAK FLOW RATE(CFS) =       3.16

****************************************************************************
  FLOW PROCESS FROM NODE     27.00 TO NODE     28.00 IS CODE =  31
----------------------------------------------------------------------------
  >>>>>COMPUTE PIPE-FLOW TRAVEL TIME THRU SUBAREA<<<<<
  >>>>>USING COMPUTER-ESTIMATED PIPESIZE (NON-PRESSURE FLOW)<<<<<
============================================================================
  ELEVATION DATA: UPSTREAM(FEET) =    29.20  DOWNSTREAM(FEET) =    28.00
  FLOW LENGTH(FEET) =   258.00   MANNING'S N =  0.013
  DEPTH OF FLOW IN  15.0 INCH PIPE IS   9.7 INCHES
  PIPE-FLOW VELOCITY(FEET/SEC.) =   3.74
  ESTIMATED PIPE DIAMETER(INCH) =  15.00    NUMBER OF PIPES =   1
  PIPE-FLOW(CFS) =       3.16
  PIPE TRAVEL TIME(MIN.) =   1.15    Tc(MIN.) =   10.96
  LONGEST FLOWPATH FROM NODE     25.00 TO NODE     28.00 =     947.00 FEET.

****************************************************************************
  FLOW PROCESS FROM NODE     28.00 TO NODE     28.00 IS CODE =   1
----------------------------------------------------------------------------
  >>>>>DESIGNATE INDEPENDENT STREAM FOR CONFLUENCE<<<<<
============================================================================
  TOTAL NUMBER OF STREAMS =  2
  CONFLUENCE VALUES USED FOR INDEPENDENT STREAM  1 ARE:
  TIME OF CONCENTRATION(MIN.) =   10.96
  RAINFALL INTENSITY(INCH/HR) =   1.44
```

```
  AREA-AVERAGED Fm(INCH/HR) =  0.03
  AREA-AVERAGED Fp(INCH/HR) =  0.25
  AREA-AVERAGED Ap =  0.10
  EFFECTIVE STREAM AREA(ACRES) =       2.32
  TOTAL STREAM AREA(ACRES) =       2.32
  PEAK FLOW RATE(CFS) AT CONFLUENCE =       3.16

****************************************************************************
  FLOW PROCESS FROM NODE     29.00 TO NODE     30.00 IS CODE =  21
----------------------------------------------------------------------------
  >>>>>RATIONAL METHOD INITIAL SUBAREA ANALYSIS<<<<<
  >>USE TIME-OF-CONCENTRATION NOMOGRAPH FOR INITIAL SUBAREA<<
============================================================================
  INITIAL SUBAREA FLOW-LENGTH(FEET) =   330.00
  ELEVATION DATA: UPSTREAM(FEET) =     35.10  DOWNSTREAM(FEET) =     32.90

  Tc = K*[(LENGTH** 3.00)/(ELEVATION CHANGE)]**0.20
  SUBAREA ANALYSIS USED MINIMUM Tc(MIN.) =    8.424
  *   2 YEAR RAINFALL INTENSITY(INCH/HR) =  1.678
  SUBAREA Tc AND LOSS RATE DATA(AMC  I ):
   DEVELOPMENT TYPE/      SCS SOIL   AREA      Fp         Ap     SCS   Tc
       LAND USE            GROUP   (ACRES)  (INCH/HR)  (DECIMAL)  CN  (MIN.)
  COMMERCIAL                 C        1.41      0.25     0.100    50    8.42
  SUBAREA AVERAGE PERVIOUS LOSS RATE, Fp(INCH/HR) =  0.25
  SUBAREA AVERAGE PERVIOUS AREA FRACTION, Ap =  0.100
  SUBAREA RUNOFF(CFS) =      2.10
  TOTAL AREA(ACRES) =      1.41   PEAK FLOW RATE(CFS) =      2.10

****************************************************************************
  FLOW PROCESS FROM NODE     30.00 TO NODE     31.00 IS CODE =  62
----------------------------------------------------------------------------
  >>>>>COMPUTE STREET FLOW TRAVEL TIME THRU SUBAREA<<<<<
  >>>>>(STREET TABLE SECTION #  1 USED)<<<<<
============================================================================
  UPSTREAM ELEVATION(FEET) =   32.90  DOWNSTREAM ELEVATION(FEET) =   32.10
  STREET LENGTH(FEET) =   158.00   CURB HEIGHT(INCHES) =  8.0
  STREET HALFWIDTH(FEET) = 30.00

  DISTANCE FROM CROWN TO CROSSFALL GRADEBREAK(FEET) =  20.00
  INSIDE STREET CROSSFALL(DECIMAL) =  0.018
  OUTSIDE STREET CROSSFALL(DECIMAL)  =  0.018

  SPECIFIED NUMBER OF HALFSTREETS CARRYING RUNOFF =  1
  STREET PARKWAY CROSSFALL(DECIMAL)  =  0.020
  Manning's FRICTION FACTOR for Streetflow Section(curb-to-curb) =   0.0150
  Manning's FRICTION FACTOR for Back-of-Walk Flow Section =   0.0200

    **TRAVEL TIME COMPUTED USING ESTIMATED FLOW(CFS) =       3.62
    STREETFLOW MODEL RESULTS USING ESTIMATED FLOW:
    STREET FLOW DEPTH(FEET) =  0.41
    HALFSTREET FLOOD WIDTH(FEET) =   14.02
    AVERAGE FLOW VELOCITY(FEET/SEC.) =    1.86
    PRODUCT OF DEPTH&VELOCITY(FT*FT/SEC.) =    0.77
  STREET FLOW TRAVEL TIME(MIN.) =   1.42   Tc(MIN.) =    9.84
  *   2 YEAR RAINFALL INTENSITY(INCH/HR) =  1.535
  SUBAREA LOSS RATE DATA(AMC  I ):
   DEVELOPMENT TYPE/      SCS SOIL   AREA      Fp         Ap     SCS
       LAND USE            GROUP   (ACRES)  (INCH/HR)  (DECIMAL)  CN
  COMMERCIAL                 C        2.24      0.25     0.100    50
  SUBAREA AVERAGE PERVIOUS LOSS RATE, Fp(INCH/HR) =  0.25
  SUBAREA AVERAGE PERVIOUS AREA FRACTION, Ap =  0.100
  SUBAREA AREA(ACRES) =    2.24      SUBAREA RUNOFF(CFS) =    3.04
```

```
  EFFECTIVE AREA(ACRES) =      3.65    AREA-AVERAGED Fm(INCH/HR) =  0.03
  AREA-AVERAGED Fp(INCH/HR) =  0.25  AREA-AVERAGED Ap =  0.10
  TOTAL AREA(ACRES) =        3.7        PEAK FLOW RATE(CFS) =       4.96

  END OF SUBAREA STREET FLOW HYDRAULICS:
  DEPTH(FEET) = 0.45   HALFSTREET FLOOD WIDTH(FEET) =  16.05
  FLOW VELOCITY(FEET/SEC.) =  1.99   DEPTH*VELOCITY(FT*FT/SEC.) =   0.89
  LONGEST FLOWPATH FROM NODE     29.00 TO NODE     31.00 =     488.00 FEET.

****************************************************************************
  FLOW PROCESS FROM NODE     31.00 TO NODE     28.00 IS CODE =  31
----------------------------------------------------------------------------
  >>>>>COMPUTE PIPE-FLOW TRAVEL TIME THRU SUBAREA<<<<<
  >>>>>USING COMPUTER-ESTIMATED PIPESIZE (NON-PRESSURE FLOW)<<<<<
============================================================================
  ELEVATION DATA: UPSTREAM(FEET) =    28.30  DOWNSTREAM(FEET) =    28.00
  FLOW LENGTH(FEET) =    29.00   MANNING'S N =  0.013
  DEPTH OF FLOW IN  15.0 INCH PIPE IS  10.1 INCHES
  PIPE-FLOW VELOCITY(FEET/SEC.) =   5.64
  ESTIMATED PIPE DIAMETER(INCH) =  15.00    NUMBER OF PIPES =   1
  PIPE-FLOW(CFS) =       4.96
  PIPE TRAVEL TIME(MIN.) =   0.09    Tc(MIN.) =    9.93
  LONGEST FLOWPATH FROM NODE     29.00 TO NODE     28.00 =     517.00 FEET.

****************************************************************************
  FLOW PROCESS FROM NODE     28.00 TO NODE     28.00 IS CODE =   1
----------------------------------------------------------------------------
  >>>>>DESIGNATE INDEPENDENT STREAM FOR CONFLUENCE<<<<<
  >>>>>AND COMPUTE VARIOUS CONFLUENCED STREAM VALUES<<<<<
============================================================================
  TOTAL NUMBER OF STREAMS =  2
  CONFLUENCE VALUES USED FOR INDEPENDENT STREAM  2 ARE:
  TIME OF CONCENTRATION(MIN.) =    9.93
  RAINFALL INTENSITY(INCH/HR) =   1.53
  AREA-AVERAGED Fm(INCH/HR) =  0.03
  AREA-AVERAGED Fp(INCH/HR) =  0.25
  AREA-AVERAGED Ap =  0.10
  EFFECTIVE STREAM AREA(ACRES) =       3.65
  TOTAL STREAM AREA(ACRES) =       3.65
  PEAK FLOW RATE(CFS) AT CONFLUENCE =       4.96

  ** CONFLUENCE DATA **
   STREAM       Q      Tc   Intensity   Fp(Fm)     Ap     Ae     HEADWATER
   NUMBER     (CFS)  (MIN.) (INCH/HR) (INCH/HR)         (ACRES)    NODE
      1        3.16   10.96    1.443  0.25( 0.03) 0.10       2.3      25.00
      2        4.96    9.93    1.527  0.25( 0.03) 0.10       3.7      29.00

  RAINFALL INTENSITY AND TIME OF CONCENTRATION RATIO
  CONFLUENCE FORMULA USED FOR  2 STREAMS.

  ** PEAK FLOW RATE TABLE **
   STREAM       Q      Tc   Intensity   Fp(Fm)     Ap     Ae     HEADWATER
   NUMBER     (CFS)  (MIN.) (INCH/HR) (INCH/HR)         (ACRES)    NODE
      1        7.99    9.93    1.527  0.25( 0.02) 0.10       5.8      29.00
      2        7.84   10.96    1.443  0.25( 0.02) 0.10       6.0      25.00

  COMPUTED CONFLUENCE ESTIMATES ARE AS FOLLOWS:
  PEAK FLOW RATE(CFS) =       7.99    Tc(MIN.) =     9.93
  EFFECTIVE AREA(ACRES) =       5.75   AREA-AVERAGED Fm(INCH/HR) =  0.02
  AREA-AVERAGED Fp(INCH/HR) =  0.25  AREA-AVERAGED Ap =  0.10
  TOTAL AREA(ACRES) =        6.0
  LONGEST FLOWPATH FROM NODE     25.00 TO NODE     28.00 =     947.00 FEET.
```

```
****************************************************************************
  FLOW PROCESS FROM NODE     28.00 TO NODE     24.00 IS CODE =  31
----------------------------------------------------------------------------
  >>>>>COMPUTE PIPE-FLOW TRAVEL TIME THRU SUBAREA<<<<<
  >>>>>USING COMPUTER-ESTIMATED PIPESIZE (NON-PRESSURE FLOW)<<<<<
============================================================================
  ELEVATION DATA: UPSTREAM(FEET) =    28.00  DOWNSTREAM(FEET) =    26.10
  FLOW LENGTH(FEET) =    82.00   MANNING'S N =  0.013
  DEPTH OF FLOW IN  15.0 INCH PIPE IS  10.7 INCHES
  PIPE-FLOW VELOCITY(FEET/SEC.) =   8.54
  ESTIMATED PIPE DIAMETER(INCH) =  15.00    NUMBER OF PIPES =   1
  PIPE-FLOW(CFS) =       7.99
  PIPE TRAVEL TIME(MIN.) =   0.16    Tc(MIN.) =   10.09
  LONGEST FLOWPATH FROM NODE     25.00 TO NODE     24.00 =    1029.00 FEET.

****************************************************************************
  FLOW PROCESS FROM NODE     24.00 TO NODE     24.00 IS CODE =  81
----------------------------------------------------------------------------
  >>>>>ADDITION OF SUBAREA TO MAINLINE PEAK FLOW<<<<<
============================================================================
  MAINLINE Tc(MIN.) =   10.09
  *   2 YEAR RAINFALL INTENSITY(INCH/HR) =  1.513
  SUBAREA LOSS RATE DATA(AMC  I ):
   DEVELOPMENT TYPE/      SCS SOIL   AREA      Fp         Ap     SCS
       LAND USE            GROUP   (ACRES)  (INCH/HR)  (DECIMAL)  CN
  PUBLIC PARK               C        1.10      0.25     0.850    50
  SUBAREA AVERAGE PERVIOUS LOSS RATE, Fp(INCH/HR) =  0.25
  SUBAREA AVERAGE PERVIOUS AREA FRACTION, Ap =  0.850
  SUBAREA AREA(ACRES) =    1.10      SUBAREA RUNOFF(CFS) =    1.29
  EFFECTIVE AREA(ACRES) =      6.85   AREA-AVERAGED Fm(INCH/HR) =  0.06
  AREA-AVERAGED Fp(INCH/HR) =  0.25  AREA-AVERAGED Ap =  0.22
  TOTAL AREA(ACRES) =        7.1       PEAK FLOW RATE(CFS) =       8.99

****************************************************************************
  FLOW PROCESS FROM NODE     24.00 TO NODE     24.00 IS CODE =  11
----------------------------------------------------------------------------
  >>>>>CONFLUENCE MEMORY BANK # 1 WITH THE MAIN-STREAM MEMORY<<<<<
============================================================================

  ** MAIN STREAM CONFLUENCE DATA **
   STREAM       Q      Tc   Intensity   Fp(Fm)     Ap     Ae     HEADWATER
   NUMBER     (CFS)  (MIN.) (INCH/HR) (INCH/HR)         (ACRES)    NODE
      1        8.99   10.09    1.513  0.25( 0.06) 0.22       6.9      29.00
      2        8.76   11.12    1.431  0.25( 0.05) 0.22       7.1      25.00
  LONGEST FLOWPATH FROM NODE     25.00 TO NODE     24.00 =    1029.00 FEET.

  ** MEMORY BANK #  1 CONFLUENCE DATA **
   STREAM       Q      Tc   Intensity   Fp(Fm)     Ap     Ae     HEADWATER
   NUMBER     (CFS)  (MIN.) (INCH/HR) (INCH/HR)         (ACRES)    NODE
      1        6.23    9.45    1.571  0.25( 0.08) 0.30       4.0      20.00
      2        5.30   13.31    1.291  0.25( 0.07) 0.29       4.3      22.00
  LONGEST FLOWPATH FROM NODE     22.00 TO NODE     24.00 =    1123.00 FEET.

  ** PEAK FLOW RATE TABLE **
   STREAM       Q      Tc   Intensity   Fp(Fm)     Ap     Ae     HEADWATER
   NUMBER     (CFS)  (MIN.) (INCH/HR) (INCH/HR)         (ACRES)    NODE
      1       14.99    9.45    1.571  0.25( 0.06) 0.25      10.4      20.00
      2       15.07   10.09    1.513  0.25( 0.06) 0.25      10.9      29.00
      3       14.59   11.12    1.431  0.25( 0.06) 0.25      11.2      25.00
      4       13.17   13.31    1.291  0.25( 0.06) 0.24      11.4      22.00
    TOTAL AREA(ACRES) =        11.4
```

```
  COMPUTED CONFLUENCE ESTIMATES ARE AS FOLLOWS:
  PEAK FLOW RATE(CFS) =       15.07  Tc(MIN.) =   10.088
  EFFECTIVE AREA(ACRES) =     10.93  AREA-AVERAGED Fm(INCH/HR) =  0.06
  AREA-AVERAGED Fp(INCH/HR) =  0.25  AREA-AVERAGED Ap =  0.25
  TOTAL AREA(ACRES) =       11.4
  LONGEST FLOWPATH FROM NODE     22.00 TO NODE     24.00 =    1123.00 FEET.

****************************************************************************
  FLOW PROCESS FROM NODE     24.00 TO NODE     32.00 IS CODE =  31
----------------------------------------------------------------------------
  >>>>>COMPUTE PIPE-FLOW TRAVEL TIME THRU SUBAREA<<<<<
  >>>>>USING COMPUTER-ESTIMATED PIPESIZE (NON-PRESSURE FLOW)<<<<<
============================================================================
  ELEVATION DATA: UPSTREAM(FEET) =    26.10  DOWNSTREAM(FEET) =    25.20
  FLOW LENGTH(FEET) =   292.00   MANNING'S N =  0.013
  DEPTH OF FLOW IN  27.0 INCH PIPE IS  20.5 INCHES
  PIPE-FLOW VELOCITY(FEET/SEC.) =   4.66
  ESTIMATED PIPE DIAMETER(INCH) =  27.00    NUMBER OF PIPES =   1
  PIPE-FLOW(CFS) =      15.07
  PIPE TRAVEL TIME(MIN.) =   1.04    Tc(MIN.) =   11.13
  LONGEST FLOWPATH FROM NODE     22.00 TO NODE     32.00 =    1415.00 FEET.

+--------------------------------------------------------------------------+
| AREA 'C'                                                                 |
|                                                                          |
|                                                                          |
+--------------------------------------------------------------------------+

****************************************************************************
  FLOW PROCESS FROM NODE     40.00 TO NODE     41.00 IS CODE =  21
----------------------------------------------------------------------------
  >>>>>RATIONAL METHOD INITIAL SUBAREA ANALYSIS<<<<<
  >>USE TIME-OF-CONCENTRATION NOMOGRAPH FOR INITIAL SUBAREA<<
============================================================================
  INITIAL SUBAREA FLOW-LENGTH(FEET) =   297.00
  ELEVATION DATA: UPSTREAM(FEET) =     33.80  DOWNSTREAM(FEET) =     33.40

  Tc = K*[(LENGTH** 3.00)/(ELEVATION CHANGE)]**0.20
  SUBAREA ANALYSIS USED MINIMUM Tc(MIN.) =   11.120
  *   2 YEAR RAINFALL INTENSITY(INCH/HR) =  1.431
  SUBAREA Tc AND LOSS RATE DATA(AMC  I ):
   DEVELOPMENT TYPE/      SCS SOIL   AREA      Fp         Ap     SCS   Tc
       LAND USE            GROUP   (ACRES)  (INCH/HR)  (DECIMAL)  CN  (MIN.)
  COMMERCIAL                 C        2.91      0.25     0.100    50   11.12
  SUBAREA AVERAGE PERVIOUS LOSS RATE, Fp(INCH/HR) =  0.25
  SUBAREA AVERAGE PERVIOUS AREA FRACTION, Ap =  0.100
  SUBAREA RUNOFF(CFS) =      3.68
  TOTAL AREA(ACRES) =      2.91   PEAK FLOW RATE(CFS) =      3.68

****************************************************************************
  FLOW PROCESS FROM NODE     41.00 TO NODE     41.00 IS CODE =  81
----------------------------------------------------------------------------
  >>>>>ADDITION OF SUBAREA TO MAINLINE PEAK FLOW<<<<<
============================================================================
  MAINLINE Tc(MIN.) =   11.12
  *   2 YEAR RAINFALL INTENSITY(INCH/HR) =  1.431
  SUBAREA LOSS RATE DATA(AMC  I ):
   DEVELOPMENT TYPE/      SCS SOIL   AREA      Fp         Ap     SCS
       LAND USE            GROUP   (ACRES)  (INCH/HR)  (DECIMAL)  CN
  COMMERCIAL                 C        1.19      0.25     0.100    50
  SUBAREA AVERAGE PERVIOUS LOSS RATE, Fp(INCH/HR) =  0.25
```

```
  SUBAREA AVERAGE PERVIOUS AREA FRACTION, Ap =  0.100
  SUBAREA AREA(ACRES) =    1.19      SUBAREA RUNOFF(CFS) =    1.51
  EFFECTIVE AREA(ACRES) =      4.10   AREA-AVERAGED Fm(INCH/HR) =  0.02
  AREA-AVERAGED Fp(INCH/HR) =  0.25  AREA-AVERAGED Ap =  0.10
  TOTAL AREA(ACRES) =        4.1       PEAK FLOW RATE(CFS) =       5.19

****************************************************************************
  FLOW PROCESS FROM NODE     41.00 TO NODE     41.00 IS CODE =  81
----------------------------------------------------------------------------
  >>>>>ADDITION OF SUBAREA TO MAINLINE PEAK FLOW<<<<<
============================================================================
  MAINLINE Tc(MIN.) =   11.12
  *   2 YEAR RAINFALL INTENSITY(INCH/HR) =  1.431
  SUBAREA LOSS RATE DATA(AMC  I ):
   DEVELOPMENT TYPE/      SCS SOIL   AREA      Fp         Ap     SCS
       LAND USE            GROUP   (ACRES)  (INCH/HR)  (DECIMAL)  CN
  COMMERCIAL                 C        1.68      0.25     0.100    50
  SUBAREA AVERAGE PERVIOUS LOSS RATE, Fp(INCH/HR) =  0.25
  SUBAREA AVERAGE PERVIOUS AREA FRACTION, Ap =  0.100
  SUBAREA AREA(ACRES) =    1.68      SUBAREA RUNOFF(CFS) =    2.13
  EFFECTIVE AREA(ACRES) =      5.78   AREA-AVERAGED Fm(INCH/HR) =  0.03
  AREA-AVERAGED Fp(INCH/HR) =  0.25  AREA-AVERAGED Ap =  0.10
  TOTAL AREA(ACRES) =        5.8       PEAK FLOW RATE(CFS) =       7.31

+--------------------------------------------------------------------------+
| AREA 'D'                                                                 |
|                                                                          |
|                                                                          |
+--------------------------------------------------------------------------+

****************************************************************************
  FLOW PROCESS FROM NODE     50.00 TO NODE     51.00 IS CODE =  21
----------------------------------------------------------------------------
  >>>>>RATIONAL METHOD INITIAL SUBAREA ANALYSIS<<<<<
  >>USE TIME-OF-CONCENTRATION NOMOGRAPH FOR INITIAL SUBAREA<<
============================================================================
  INITIAL SUBAREA FLOW-LENGTH(FEET) =   330.00
  ELEVATION DATA: UPSTREAM(FEET) =     35.20  DOWNSTREAM(FEET) =     34.50

  Tc = K*[(LENGTH** 3.00)/(ELEVATION CHANGE)]**0.20
  SUBAREA ANALYSIS USED MINIMUM Tc(MIN.) =   10.592
  *   2 YEAR RAINFALL INTENSITY(INCH/HR) =  1.471
  SUBAREA Tc AND LOSS RATE DATA(AMC  I ):
   DEVELOPMENT TYPE/      SCS SOIL   AREA      Fp         Ap     SCS   Tc
       LAND USE            GROUP   (ACRES)  (INCH/HR)  (DECIMAL)  CN  (MIN.)
  COMMERCIAL                 C        1.10      0.25     0.100    50   10.59
  SUBAREA AVERAGE PERVIOUS LOSS RATE, Fp(INCH/HR) =  0.25
  SUBAREA AVERAGE PERVIOUS AREA FRACTION, Ap =  0.100
  SUBAREA RUNOFF(CFS) =      1.43
  TOTAL AREA(ACRES) =      1.10   PEAK FLOW RATE(CFS) =      1.43

+--------------------------------------------------------------------------+
| AREA 'E'                                                                 |
|                                                                          |
|                                                                          |
+--------------------------------------------------------------------------+

****************************************************************************
  FLOW PROCESS FROM NODE     60.00 TO NODE     61.00 IS CODE =  21
----------------------------------------------------------------------------
  >>>>>RATIONAL METHOD INITIAL SUBAREA ANALYSIS<<<<<
  >>USE TIME-OF-CONCENTRATION NOMOGRAPH FOR INITIAL SUBAREA<<
```

```
==============================================================================
  INITIAL SUBAREA FLOW-LENGTH(FEET) =   330.00
  ELEVATION DATA: UPSTREAM(FEET) =     39.80  DOWNSTREAM(FEET) =     36.80

  Tc = K*[(LENGTH** 3.00)/(ELEVATION CHANGE)]**0.20
  SUBAREA ANALYSIS USED MINIMUM Tc(MIN.) =    7.917
  *   2 YEAR RAINFALL INTENSITY(INCH/HR) =  1.739
  SUBAREA Tc AND LOSS RATE DATA(AMC  I ):
   DEVELOPMENT TYPE/      SCS SOIL   AREA      Fp         Ap     SCS   Tc
       LAND USE            GROUP   (ACRES)  (INCH/HR)  (DECIMAL)  CN  (MIN.)
  COMMERCIAL                 C        2.23      0.25     0.100    50    7.92
  SUBAREA AVERAGE PERVIOUS LOSS RATE, Fp(INCH/HR) =  0.25
  SUBAREA AVERAGE PERVIOUS AREA FRACTION, Ap =  0.100
  SUBAREA RUNOFF(CFS) =      3.44
  TOTAL AREA(ACRES) =      2.23   PEAK FLOW RATE(CFS) =      3.44

******************************************************************************
  FLOW PROCESS FROM NODE     61.00 TO NODE     62.00 IS CODE =  31
------------------------------------------------------------------------------
  >>>>>COMPUTE PIPE-FLOW TRAVEL TIME THRU SUBAREA<<<<<
  >>>>>USING COMPUTER-ESTIMATED PIPESIZE (NON-PRESSURE FLOW)<<<<<
==============================================================================
  ELEVATION DATA: UPSTREAM(FEET) =    31.50  DOWNSTREAM(FEET) =    30.80
  FLOW LENGTH(FEET) =   126.00   MANNING'S N =  0.013
  DEPTH OF FLOW IN  15.0 INCH PIPE IS   9.7 INCHES
  PIPE-FLOW VELOCITY(FEET/SEC.) =   4.09
  ESTIMATED PIPE DIAMETER(INCH) =  15.00    NUMBER OF PIPES =   1
  PIPE-FLOW(CFS) =       3.44
  PIPE TRAVEL TIME(MIN.) =   0.51    Tc(MIN.) =    8.43
  LONGEST FLOWPATH FROM NODE     60.00 TO NODE     62.00 =     456.00 FEET.

******************************************************************************
  FLOW PROCESS FROM NODE     62.00 TO NODE     62.00 IS CODE =   1
------------------------------------------------------------------------------
  >>>>>DESIGNATE INDEPENDENT STREAM FOR CONFLUENCE<<<<<
==============================================================================
  TOTAL NUMBER OF STREAMS =  2
  CONFLUENCE VALUES USED FOR INDEPENDENT STREAM  1 ARE:
  TIME OF CONCENTRATION(MIN.) =    8.43
  RAINFALL INTENSITY(INCH/HR) =   1.68
  AREA-AVERAGED Fm(INCH/HR) =  0.03
  AREA-AVERAGED Fp(INCH/HR) =  0.25
  AREA-AVERAGED Ap =  0.10
  EFFECTIVE STREAM AREA(ACRES) =       2.23
  TOTAL STREAM AREA(ACRES) =       2.23
  PEAK FLOW RATE(CFS) AT CONFLUENCE =       3.44

******************************************************************************
  FLOW PROCESS FROM NODE     63.00 TO NODE     64.00 IS CODE =  21
------------------------------------------------------------------------------
  >>>>>RATIONAL METHOD INITIAL SUBAREA ANALYSIS<<<<<
  >>USE TIME-OF-CONCENTRATION NOMOGRAPH FOR INITIAL SUBAREA<<
==============================================================================
  INITIAL SUBAREA FLOW-LENGTH(FEET) =   275.00
  ELEVATION DATA: UPSTREAM(FEET) =     36.40  DOWNSTREAM(FEET) =     34.60

  Tc = K*[(LENGTH** 3.00)/(ELEVATION CHANGE)]**0.20
  SUBAREA ANALYSIS USED MINIMUM Tc(MIN.) =    7.860
  *   2 YEAR RAINFALL INTENSITY(INCH/HR) =  1.746
  SUBAREA Tc AND LOSS RATE DATA(AMC  I ):
   DEVELOPMENT TYPE/      SCS SOIL   AREA      Fp         Ap     SCS   Tc
       LAND USE            GROUP   (ACRES)  (INCH/HR)  (DECIMAL)  CN  (MIN.)
```

```
  COMMERCIAL                 C        0.84      0.25     0.100    50    7.86
  SUBAREA AVERAGE PERVIOUS LOSS RATE, Fp(INCH/HR) =  0.25
  SUBAREA AVERAGE PERVIOUS AREA FRACTION, Ap =  0.100
  SUBAREA RUNOFF(CFS) =      1.30
  TOTAL AREA(ACRES) =      0.84   PEAK FLOW RATE(CFS) =      1.30

****************************************************************************
  FLOW PROCESS FROM NODE     64.00 TO NODE     62.00 IS CODE =  31
----------------------------------------------------------------------------
  >>>>>COMPUTE PIPE-FLOW TRAVEL TIME THRU SUBAREA<<<<<
  >>>>>USING COMPUTER-ESTIMATED PIPESIZE (NON-PRESSURE FLOW)<<<<<
============================================================================
  ELEVATION DATA: UPSTREAM(FEET) =    30.90  DOWNSTREAM(FEET) =    30.80
  FLOW LENGTH(FEET) =    19.00   MANNING'S N =  0.013
  DEPTH OF FLOW IN  12.0 INCH PIPE IS   6.2 INCHES
  PIPE-FLOW VELOCITY(FEET/SEC.) =   3.17
  ESTIMATED PIPE DIAMETER(INCH) =  12.00    NUMBER OF PIPES =   1
  PIPE-FLOW(CFS) =       1.30
  PIPE TRAVEL TIME(MIN.) =   0.10    Tc(MIN.) =    7.96
  LONGEST FLOWPATH FROM NODE     63.00 TO NODE     62.00 =     294.00 FEET.

****************************************************************************
  FLOW PROCESS FROM NODE     62.00 TO NODE     62.00 IS CODE =   1
----------------------------------------------------------------------------
  >>>>>DESIGNATE INDEPENDENT STREAM FOR CONFLUENCE<<<<<
  >>>>>AND COMPUTE VARIOUS CONFLUENCED STREAM VALUES<<<<<
============================================================================
  TOTAL NUMBER OF STREAMS =  2
  CONFLUENCE VALUES USED FOR INDEPENDENT STREAM  2 ARE:
  TIME OF CONCENTRATION(MIN.) =    7.96
  RAINFALL INTENSITY(INCH/HR) =   1.73
  AREA-AVERAGED Fm(INCH/HR) =  0.03
  AREA-AVERAGED Fp(INCH/HR) =  0.25
  AREA-AVERAGED Ap =  0.10
  EFFECTIVE STREAM AREA(ACRES) =       0.84
  TOTAL STREAM AREA(ACRES) =       0.84
  PEAK FLOW RATE(CFS) AT CONFLUENCE =       1.30

  ** CONFLUENCE DATA **
   STREAM       Q      Tc   Intensity   Fp(Fm)     Ap     Ae     HEADWATER
   NUMBER     (CFS)  (MIN.) (INCH/HR) (INCH/HR)         (ACRES)    NODE
      1        3.44    8.43    1.677  0.25( 0.03) 0.10       2.2      60.00
      2        1.30    7.96    1.733  0.25( 0.03) 0.10       0.8      63.00

  RAINFALL INTENSITY AND TIME OF CONCENTRATION RATIO
  CONFLUENCE FORMULA USED FOR  2 STREAMS.

  ** PEAK FLOW RATE TABLE **
   STREAM       Q      Tc   Intensity   Fp(Fm)     Ap     Ae     HEADWATER
   NUMBER     (CFS)  (MIN.) (INCH/HR) (INCH/HR)         (ACRES)    NODE
      1        4.66    7.96    1.733  0.25( 0.03) 0.10       2.9      63.00
      2        4.70    8.43    1.677  0.25( 0.03) 0.10       3.1      60.00

  COMPUTED CONFLUENCE ESTIMATES ARE AS FOLLOWS:
  PEAK FLOW RATE(CFS) =       4.70    Tc(MIN.) =     8.43
  EFFECTIVE AREA(ACRES) =       3.07   AREA-AVERAGED Fm(INCH/HR) =  0.03
  AREA-AVERAGED Fp(INCH/HR) =  0.25  AREA-AVERAGED Ap =  0.10
  TOTAL AREA(ACRES) =        3.1
  LONGEST FLOWPATH FROM NODE     60.00 TO NODE     62.00 =     456.00 FEET.

****************************************************************************
  FLOW PROCESS FROM NODE     62.00 TO NODE     65.00 IS CODE =  31
```

```
------------------------------------------------------------------------
  >>>>>COMPUTE PIPE-FLOW TRAVEL TIME THRU SUBAREA<<<<<
  >>>>>USING COMPUTER-ESTIMATED PIPESIZE (NON-PRESSURE FLOW)<<<<<
========================================================================
  ELEVATION DATA: UPSTREAM(FEET) =    30.80  DOWNSTREAM(FEET) =    30.00
  FLOW LENGTH(FEET) =   251.00   MANNING'S N =  0.013
  DEPTH OF FLOW IN  18.0 INCH PIPE IS  12.6 INCHES
  PIPE-FLOW VELOCITY(FEET/SEC.) =   3.56
  ESTIMATED PIPE DIAMETER(INCH) =  18.00    NUMBER OF PIPES =   1
  PIPE-FLOW(CFS) =       4.70
  PIPE TRAVEL TIME(MIN.) =   1.17    Tc(MIN.) =    9.60
  LONGEST FLOWPATH FROM NODE     60.00 TO NODE     65.00 =     707.00 FEET.

****************************************************************************
  FLOW PROCESS FROM NODE     65.00 TO NODE     65.00 IS CODE =   1
------------------------------------------------------------------------
  >>>>>DESIGNATE INDEPENDENT STREAM FOR CONFLUENCE<<<<<
========================================================================
  TOTAL NUMBER OF STREAMS =  2
  CONFLUENCE VALUES USED FOR INDEPENDENT STREAM  1 ARE:
  TIME OF CONCENTRATION(MIN.) =    9.60
  RAINFALL INTENSITY(INCH/HR) =   1.56
  AREA-AVERAGED Fm(INCH/HR) =  0.03
  AREA-AVERAGED Fp(INCH/HR) =  0.25
  AREA-AVERAGED Ap =  0.10
  EFFECTIVE STREAM AREA(ACRES) =       3.07
  TOTAL STREAM AREA(ACRES) =       3.07
  PEAK FLOW RATE(CFS) AT CONFLUENCE =       4.70

****************************************************************************
  FLOW PROCESS FROM NODE     63.00 TO NODE     66.00 IS CODE =  21
------------------------------------------------------------------------
  >>>>>RATIONAL METHOD INITIAL SUBAREA ANALYSIS<<<<<
  >>USE TIME-OF-CONCENTRATION NOMOGRAPH FOR INITIAL SUBAREA<<
========================================================================
  INITIAL SUBAREA FLOW-LENGTH(FEET) =   330.00
  ELEVATION DATA: UPSTREAM(FEET) =     36.40  DOWNSTREAM(FEET) =     34.40

  Tc = K*[(LENGTH** 3.00)/(ELEVATION CHANGE)]**0.20
  SUBAREA ANALYSIS USED MINIMUM Tc(MIN.) =    8.586
  *   2 YEAR RAINFALL INTENSITY(INCH/HR) =  1.660
  SUBAREA Tc AND LOSS RATE DATA(AMC  I ):
   DEVELOPMENT TYPE/      SCS SOIL   AREA      Fp         Ap     SCS   Tc
       LAND USE            GROUP   (ACRES)  (INCH/HR)  (DECIMAL)  CN  (MIN.)
  COMMERCIAL                 C        0.64      0.25     0.100    50    8.59
  SUBAREA AVERAGE PERVIOUS LOSS RATE, Fp(INCH/HR) =  0.25
  SUBAREA AVERAGE PERVIOUS AREA FRACTION, Ap =  0.100
  SUBAREA RUNOFF(CFS) =      0.94
  TOTAL AREA(ACRES) =      0.64   PEAK FLOW RATE(CFS) =      0.94

****************************************************************************
  FLOW PROCESS FROM NODE     66.00 TO NODE     67.00 IS CODE =  62
------------------------------------------------------------------------
  >>>>>COMPUTE STREET FLOW TRAVEL TIME THRU SUBAREA<<<<<
  >>>>>(STREET TABLE SECTION #  1 USED)<<<<<
========================================================================
  UPSTREAM ELEVATION(FEET) =   34.40  DOWNSTREAM ELEVATION(FEET) =   33.80
  STREET LENGTH(FEET) =   110.00   CURB HEIGHT(INCHES) =  8.0
  STREET HALFWIDTH(FEET) = 30.00

  DISTANCE FROM CROWN TO CROSSFALL GRADEBREAK(FEET) =  20.00
  INSIDE STREET CROSSFALL(DECIMAL) =  0.018
```

```
  OUTSIDE STREET CROSSFALL(DECIMAL)  =  0.018

  SPECIFIED NUMBER OF HALFSTREETS CARRYING RUNOFF =  1
  STREET PARKWAY CROSSFALL(DECIMAL)  =  0.020
  Manning's FRICTION FACTOR for Streetflow Section(curb-to-curb) =   0.0150
  Manning's FRICTION FACTOR for Back-of-Walk Flow Section =   0.0200

    **TRAVEL TIME COMPUTED USING ESTIMATED FLOW(CFS) =       1.91
    STREETFLOW MODEL RESULTS USING ESTIMATED FLOW:
    STREET FLOW DEPTH(FEET) =  0.35
    HALFSTREET FLOOD WIDTH(FEET) =   10.35
    AVERAGE FLOW VELOCITY(FEET/SEC.) =    1.66
    PRODUCT OF DEPTH&VELOCITY(FT*FT/SEC.) =    0.58
  STREET FLOW TRAVEL TIME(MIN.) =   1.11   Tc(MIN.) =    9.69
  *   2 YEAR RAINFALL INTENSITY(INCH/HR) =  1.548
  SUBAREA LOSS RATE DATA(AMC  I ):
   DEVELOPMENT TYPE/      SCS SOIL   AREA      Fp         Ap     SCS
       LAND USE            GROUP   (ACRES)  (INCH/HR)  (DECIMAL)  CN
  COMMERCIAL                 C        1.41      0.25     0.100    50
  SUBAREA AVERAGE PERVIOUS LOSS RATE, Fp(INCH/HR) =  0.25
  SUBAREA AVERAGE PERVIOUS AREA FRACTION, Ap =  0.100
  SUBAREA AREA(ACRES) =    1.41      SUBAREA RUNOFF(CFS) =    1.93
  EFFECTIVE AREA(ACRES) =      2.05    AREA-AVERAGED Fm(INCH/HR) =  0.03
  AREA-AVERAGED Fp(INCH/HR) =  0.25  AREA-AVERAGED Ap =  0.10
  TOTAL AREA(ACRES) =        2.0        PEAK FLOW RATE(CFS) =       2.81

  END OF SUBAREA STREET FLOW HYDRAULICS:
  DEPTH(FEET) = 0.38   HALFSTREET FLOOD WIDTH(FEET) =  12.38
  FLOW VELOCITY(FEET/SEC.) =  1.80   DEPTH*VELOCITY(FT*FT/SEC.) =   0.69
  LONGEST FLOWPATH FROM NODE     63.00 TO NODE     67.00 =     440.00 FEET.

****************************************************************************
  FLOW PROCESS FROM NODE     67.00 TO NODE     65.00 IS CODE =  31
----------------------------------------------------------------------------
  >>>>>COMPUTE PIPE-FLOW TRAVEL TIME THRU SUBAREA<<<<<
  >>>>>USING COMPUTER-ESTIMATED PIPESIZE (NON-PRESSURE FLOW)<<<<<
============================================================================
  ELEVATION DATA: UPSTREAM(FEET) =    30.10  DOWNSTREAM(FEET) =    30.00
  FLOW LENGTH(FEET) =    12.00   MANNING'S N =  0.013
  DEPTH OF FLOW IN  12.0 INCH PIPE IS   9.0 INCHES
  PIPE-FLOW VELOCITY(FEET/SEC.) =   4.45
  ESTIMATED PIPE DIAMETER(INCH) =  12.00    NUMBER OF PIPES =   1
  PIPE-FLOW(CFS) =       2.81
  PIPE TRAVEL TIME(MIN.) =   0.04    Tc(MIN.) =    9.74
  LONGEST FLOWPATH FROM NODE     63.00 TO NODE     65.00 =     452.00 FEET.

****************************************************************************
  FLOW PROCESS FROM NODE     65.00 TO NODE     65.00 IS CODE =   1
----------------------------------------------------------------------------
  >>>>>DESIGNATE INDEPENDENT STREAM FOR CONFLUENCE<<<<<
  >>>>>AND COMPUTE VARIOUS CONFLUENCED STREAM VALUES<<<<<
============================================================================
  TOTAL NUMBER OF STREAMS =  2
  CONFLUENCE VALUES USED FOR INDEPENDENT STREAM  2 ARE:
  TIME OF CONCENTRATION(MIN.) =    9.74
  RAINFALL INTENSITY(INCH/HR) =   1.54
  AREA-AVERAGED Fm(INCH/HR) =  0.03
  AREA-AVERAGED Fp(INCH/HR) =  0.25
  AREA-AVERAGED Ap =  0.10
  EFFECTIVE STREAM AREA(ACRES) =       2.05
  TOTAL STREAM AREA(ACRES) =       2.05
  PEAK FLOW RATE(CFS) AT CONFLUENCE =       2.81
```

```
  ** CONFLUENCE DATA **
   STREAM       Q      Tc   Intensity   Fp(Fm)     Ap     Ae     HEADWATER
   NUMBER     (CFS)  (MIN.) (INCH/HR) (INCH/HR)         (ACRES)    NODE
      1        4.66    9.14    1.602  0.25( 0.03) 0.10       2.9      63.00
      1        4.70    9.60    1.556  0.25( 0.03) 0.10       3.1      60.00
      2        2.81    9.74    1.544  0.25( 0.03) 0.10       2.0      63.00

  RAINFALL INTENSITY AND TIME OF CONCENTRATION RATIO
  CONFLUENCE FORMULA USED FOR  2 STREAMS.

  ** PEAK FLOW RATE TABLE **
   STREAM       Q      Tc   Intensity   Fp(Fm)     Ap     Ae     HEADWATER
   NUMBER     (CFS)  (MIN.) (INCH/HR) (INCH/HR)         (ACRES)    NODE
      1        7.40    9.14    1.602  0.25( 0.03) 0.10       4.9      63.00
      2        7.49    9.60    1.556  0.25( 0.03) 0.10       5.1      60.00
      3        7.47    9.74    1.544  0.25( 0.03) 0.10       5.1      63.00

  COMPUTED CONFLUENCE ESTIMATES ARE AS FOLLOWS:
  PEAK FLOW RATE(CFS) =       7.49    Tc(MIN.) =     9.60
  EFFECTIVE AREA(ACRES) =       5.09   AREA-AVERAGED Fm(INCH/HR) =  0.03
  AREA-AVERAGED Fp(INCH/HR) =  0.25  AREA-AVERAGED Ap =  0.10
  TOTAL AREA(ACRES) =        5.1
  LONGEST FLOWPATH FROM NODE     60.00 TO NODE     65.00 =     707.00 FEET.

****************************************************************************
  FLOW PROCESS FROM NODE     65.00 TO NODE     68.00 IS CODE =  31
----------------------------------------------------------------------------
  >>>>>COMPUTE PIPE-FLOW TRAVEL TIME THRU SUBAREA<<<<<
  >>>>>USING COMPUTER-ESTIMATED PIPESIZE (NON-PRESSURE FLOW)<<<<<
============================================================================
  ELEVATION DATA: UPSTREAM(FEET) =    30.00  DOWNSTREAM(FEET) =    27.60
  FLOW LENGTH(FEET) =   189.00   MANNING'S N =  0.013
  DEPTH OF FLOW IN  18.0 INCH PIPE IS  10.8 INCHES
  PIPE-FLOW VELOCITY(FEET/SEC.) =   6.80
  ESTIMATED PIPE DIAMETER(INCH) =  18.00    NUMBER OF PIPES =   1
  PIPE-FLOW(CFS) =       7.49
  PIPE TRAVEL TIME(MIN.) =   0.46    Tc(MIN.) =   10.07
  LONGEST FLOWPATH FROM NODE     60.00 TO NODE     68.00 =     896.00 FEET.

+----------------------------------------------------------------------------+
| AREA 'F'                                                                   |
|                                                                            |
|                                                                            |
+----------------------------------------------------------------------------+

****************************************************************************
  FLOW PROCESS FROM NODE     70.00 TO NODE     71.00 IS CODE =  21
----------------------------------------------------------------------------
  >>>>>RATIONAL METHOD INITIAL SUBAREA ANALYSIS<<<<<
  >>USE TIME-OF-CONCENTRATION NOMOGRAPH FOR INITIAL SUBAREA<<
============================================================================
  INITIAL SUBAREA FLOW-LENGTH(FEET) =   276.00
  ELEVATION DATA: UPSTREAM(FEET) =     35.40  DOWNSTREAM(FEET) =     34.20

  Tc = K*[(LENGTH** 3.00)/(ELEVATION CHANGE)]**0.20
  SUBAREA ANALYSIS USED MINIMUM Tc(MIN.) =    8.542
  *   2 YEAR RAINFALL INTENSITY(INCH/HR) =  1.665
  SUBAREA Tc AND LOSS RATE DATA(AMC  I ):
   DEVELOPMENT TYPE/      SCS SOIL   AREA      Fp         Ap     SCS   Tc
       LAND USE            GROUP   (ACRES)  (INCH/HR)  (DECIMAL)  CN  (MIN.)
  COMMERCIAL                 C        1.72      0.25     0.100    50    8.54
```

```
  SUBAREA AVERAGE PERVIOUS LOSS RATE, Fp(INCH/HR) =  0.25
  SUBAREA AVERAGE PERVIOUS AREA FRACTION, Ap =  0.100
  SUBAREA RUNOFF(CFS) =      2.54
  TOTAL AREA(ACRES) =      1.72   PEAK FLOW RATE(CFS) =      2.54

****************************************************************************
  FLOW PROCESS FROM NODE     71.00 TO NODE     71.00 IS CODE =  81
----------------------------------------------------------------------------
  >>>>>ADDITION OF SUBAREA TO MAINLINE PEAK FLOW<<<<<
============================================================================
  MAINLINE Tc(MIN.) =    8.54
  *   2 YEAR RAINFALL INTENSITY(INCH/HR) =  1.665
  SUBAREA LOSS RATE DATA(AMC  I ):
   DEVELOPMENT TYPE/      SCS SOIL   AREA      Fp         Ap     SCS
       LAND USE            GROUP   (ACRES)  (INCH/HR)  (DECIMAL)  CN
  COMMERCIAL                 C        0.82      0.25     0.100    50
  SUBAREA AVERAGE PERVIOUS LOSS RATE, Fp(INCH/HR) =  0.25
  SUBAREA AVERAGE PERVIOUS AREA FRACTION, Ap =  0.100
  SUBAREA AREA(ACRES) =    0.82      SUBAREA RUNOFF(CFS) =    1.21
  EFFECTIVE AREA(ACRES) =      2.54   AREA-AVERAGED Fm(INCH/HR) =  0.03
  AREA-AVERAGED Fp(INCH/HR) =  0.25  AREA-AVERAGED Ap =  0.10
  TOTAL AREA(ACRES) =        2.5       PEAK FLOW RATE(CFS) =       3.75

****************************************************************************
  FLOW PROCESS FROM NODE     71.00 TO NODE     71.00 IS CODE =  81
----------------------------------------------------------------------------
  >>>>>ADDITION OF SUBAREA TO MAINLINE PEAK FLOW<<<<<
============================================================================
  MAINLINE Tc(MIN.) =    8.54
  *   2 YEAR RAINFALL INTENSITY(INCH/HR) =  1.665
  SUBAREA LOSS RATE DATA(AMC  I ):
   DEVELOPMENT TYPE/      SCS SOIL   AREA      Fp         Ap     SCS
       LAND USE            GROUP   (ACRES)  (INCH/HR)  (DECIMAL)  CN
  COMMERCIAL                 C        1.53      0.25     0.100    50
  SUBAREA AVERAGE PERVIOUS LOSS RATE, Fp(INCH/HR) =  0.25
  SUBAREA AVERAGE PERVIOUS AREA FRACTION, Ap =  0.100
  SUBAREA AREA(ACRES) =    1.53      SUBAREA RUNOFF(CFS) =    2.26
  EFFECTIVE AREA(ACRES) =      4.07   AREA-AVERAGED Fm(INCH/HR) =  0.03
  AREA-AVERAGED Fp(INCH/HR) =  0.25  AREA-AVERAGED Ap =  0.10
  TOTAL AREA(ACRES) =        4.1       PEAK FLOW RATE(CFS) =       6.01

****************************************************************************
  FLOW PROCESS FROM NODE     71.00 TO NODE     72.00 IS CODE =  31
----------------------------------------------------------------------------
  >>>>>COMPUTE PIPE-FLOW TRAVEL TIME THRU SUBAREA<<<<<
  >>>>>USING COMPUTER-ESTIMATED PIPESIZE (NON-PRESSURE FLOW)<<<<<
============================================================================
  ELEVATION DATA: UPSTREAM(FEET) =    30.30  DOWNSTREAM(FEET) =    29.20
  FLOW LENGTH(FEET) =   426.00   MANNING'S N =  0.013
  DEPTH OF FLOW IN  21.0 INCH PIPE IS  14.0 INCHES
  PIPE-FLOW VELOCITY(FEET/SEC.) =   3.52
  ESTIMATED PIPE DIAMETER(INCH) =  21.00    NUMBER OF PIPES =   1
  PIPE-FLOW(CFS) =       6.01
  PIPE TRAVEL TIME(MIN.) =   2.02    Tc(MIN.) =   10.56
  LONGEST FLOWPATH FROM NODE     70.00 TO NODE     72.00 =     702.00 FEET.

****************************************************************************
  FLOW PROCESS FROM NODE     72.00 TO NODE     72.00 IS CODE =   1
----------------------------------------------------------------------------
  >>>>>DESIGNATE INDEPENDENT STREAM FOR CONFLUENCE<<<<<
============================================================================
  TOTAL NUMBER OF STREAMS =  3
```

```
  CONFLUENCE VALUES USED FOR INDEPENDENT STREAM  1 ARE:
  TIME OF CONCENTRATION(MIN.) =   10.56
  RAINFALL INTENSITY(INCH/HR) =   1.47
  AREA-AVERAGED Fm(INCH/HR) =  0.03
  AREA-AVERAGED Fp(INCH/HR) =  0.25
  AREA-AVERAGED Ap =  0.10
  EFFECTIVE STREAM AREA(ACRES) =       4.07
  TOTAL STREAM AREA(ACRES) =       4.07
  PEAK FLOW RATE(CFS) AT CONFLUENCE =       6.01

****************************************************************************
  FLOW PROCESS FROM NODE     73.00 TO NODE     74.00 IS CODE =  21
----------------------------------------------------------------------------
  >>>>>RATIONAL METHOD INITIAL SUBAREA ANALYSIS<<<<<
  >>USE TIME-OF-CONCENTRATION NOMOGRAPH FOR INITIAL SUBAREA<<
============================================================================
  INITIAL SUBAREA FLOW-LENGTH(FEET) =   330.00
  ELEVATION DATA: UPSTREAM(FEET) =     35.50  DOWNSTREAM(FEET) =     33.50

  Tc = K*[(LENGTH** 3.00)/(ELEVATION CHANGE)]**0.20
  SUBAREA ANALYSIS USED MINIMUM Tc(MIN.) =   10.167
  *   2 YEAR RAINFALL INTENSITY(INCH/HR) =  1.506
  SUBAREA Tc AND LOSS RATE DATA(AMC  I ):
   DEVELOPMENT TYPE/      SCS SOIL   AREA      Fp         Ap     SCS   Tc
       LAND USE            GROUP   (ACRES)  (INCH/HR)  (DECIMAL)  CN  (MIN.)
  CONDOMINIUMS               C        1.24      0.25     0.350    50   10.17
  SUBAREA AVERAGE PERVIOUS LOSS RATE, Fp(INCH/HR) =  0.25
  SUBAREA AVERAGE PERVIOUS AREA FRACTION, Ap =  0.350
  SUBAREA RUNOFF(CFS) =      1.58
  TOTAL AREA(ACRES) =      1.24   PEAK FLOW RATE(CFS) =      1.58

****************************************************************************
  FLOW PROCESS FROM NODE     74.00 TO NODE     74.00 IS CODE =  81
----------------------------------------------------------------------------
  >>>>>ADDITION OF SUBAREA TO MAINLINE PEAK FLOW<<<<<
============================================================================
  MAINLINE Tc(MIN.) =   10.17
  *   2 YEAR RAINFALL INTENSITY(INCH/HR) =  1.506
  SUBAREA LOSS RATE DATA(AMC  I ):
   DEVELOPMENT TYPE/      SCS SOIL   AREA      Fp         Ap     SCS
       LAND USE            GROUP   (ACRES)  (INCH/HR)  (DECIMAL)  CN
  COMMERCIAL                 C        0.45      0.25     0.100    50
  SUBAREA AVERAGE PERVIOUS LOSS RATE, Fp(INCH/HR) =  0.25
  SUBAREA AVERAGE PERVIOUS AREA FRACTION, Ap =  0.100
  SUBAREA AREA(ACRES) =    0.45      SUBAREA RUNOFF(CFS) =    0.60
  EFFECTIVE AREA(ACRES) =      1.69   AREA-AVERAGED Fm(INCH/HR) =  0.07
  AREA-AVERAGED Fp(INCH/HR) =  0.25  AREA-AVERAGED Ap =  0.28
  TOTAL AREA(ACRES) =        1.7       PEAK FLOW RATE(CFS) =       2.18

****************************************************************************
  FLOW PROCESS FROM NODE     74.00 TO NODE     75.00 IS CODE =  62
----------------------------------------------------------------------------
  >>>>>COMPUTE STREET FLOW TRAVEL TIME THRU SUBAREA<<<<<
  >>>>>(STREET TABLE SECTION #  1 USED)<<<<<
============================================================================
  UPSTREAM ELEVATION(FEET) =   33.50  DOWNSTREAM ELEVATION(FEET) =   33.30
  STREET LENGTH(FEET) =    51.00   CURB HEIGHT(INCHES) =  8.0
  STREET HALFWIDTH(FEET) = 30.00

  DISTANCE FROM CROWN TO CROSSFALL GRADEBREAK(FEET) =  20.00
  INSIDE STREET CROSSFALL(DECIMAL) =  0.018
  OUTSIDE STREET CROSSFALL(DECIMAL)  =  0.018
```

```
  SPECIFIED NUMBER OF HALFSTREETS CARRYING RUNOFF =  1
  STREET PARKWAY CROSSFALL(DECIMAL)  =  0.020
  Manning's FRICTION FACTOR for Streetflow Section(curb-to-curb) =   0.0150
  Manning's FRICTION FACTOR for Back-of-Walk Flow Section =   0.0200

    **TRAVEL TIME COMPUTED USING ESTIMATED FLOW(CFS) =       2.70
    STREETFLOW MODEL RESULTS USING ESTIMATED FLOW:
    STREET FLOW DEPTH(FEET) =  0.40
    HALFSTREET FLOOD WIDTH(FEET) =   13.09
    AVERAGE FLOW VELOCITY(FEET/SEC.) =    1.57
    PRODUCT OF DEPTH&VELOCITY(FT*FT/SEC.) =    0.62
  STREET FLOW TRAVEL TIME(MIN.) =   0.54   Tc(MIN.) =   10.71
  *   2 YEAR RAINFALL INTENSITY(INCH/HR) =  1.462
  SUBAREA LOSS RATE DATA(AMC  I ):
   DEVELOPMENT TYPE/      SCS SOIL   AREA      Fp         Ap     SCS
       LAND USE            GROUP   (ACRES)  (INCH/HR)  (DECIMAL)  CN
  CONDOMINIUMS              C        0.84      0.25     0.350    50
  SUBAREA AVERAGE PERVIOUS LOSS RATE, Fp(INCH/HR) =  0.25
  SUBAREA AVERAGE PERVIOUS AREA FRACTION, Ap =  0.350
  SUBAREA AREA(ACRES) =    0.84      SUBAREA RUNOFF(CFS) =    1.04
  EFFECTIVE AREA(ACRES) =      2.53    AREA-AVERAGED Fm(INCH/HR) =  0.08
  AREA-AVERAGED Fp(INCH/HR) =  0.25  AREA-AVERAGED Ap =  0.31
  TOTAL AREA(ACRES) =        2.5        PEAK FLOW RATE(CFS) =       3.16

  END OF SUBAREA STREET FLOW HYDRAULICS:
  DEPTH(FEET) = 0.41   HALFSTREET FLOOD WIDTH(FEET) =  13.95
  FLOW VELOCITY(FEET/SEC.) =  1.63   DEPTH*VELOCITY(FT*FT/SEC.) =   0.67
  LONGEST FLOWPATH FROM NODE     73.00 TO NODE     75.00 =     381.00 FEET.

****************************************************************************
  FLOW PROCESS FROM NODE     75.00 TO NODE     72.00 IS CODE =  31
----------------------------------------------------------------------------
  >>>>>COMPUTE PIPE-FLOW TRAVEL TIME THRU SUBAREA<<<<<
  >>>>>USING COMPUTER-ESTIMATED PIPESIZE (NON-PRESSURE FLOW)<<<<<
============================================================================
  ELEVATION DATA: UPSTREAM(FEET) =    29.50  DOWNSTREAM(FEET) =    29.20
  FLOW LENGTH(FEET) =    16.00   MANNING'S N =  0.013
  DEPTH OF FLOW IN  12.0 INCH PIPE IS   7.3 INCHES
  PIPE-FLOW VELOCITY(FEET/SEC.) =   6.34
  ESTIMATED PIPE DIAMETER(INCH) =  12.00    NUMBER OF PIPES =   1
  PIPE-FLOW(CFS) =       3.16
  PIPE TRAVEL TIME(MIN.) =   0.04    Tc(MIN.) =   10.75
  LONGEST FLOWPATH FROM NODE     73.00 TO NODE     72.00 =     397.00 FEET.

****************************************************************************
  FLOW PROCESS FROM NODE     72.00 TO NODE     72.00 IS CODE =   1
----------------------------------------------------------------------------
  >>>>>DESIGNATE INDEPENDENT STREAM FOR CONFLUENCE<<<<<
============================================================================
  TOTAL NUMBER OF STREAMS =  3
  CONFLUENCE VALUES USED FOR INDEPENDENT STREAM  2 ARE:
  TIME OF CONCENTRATION(MIN.) =   10.75
  RAINFALL INTENSITY(INCH/HR) =   1.46
  AREA-AVERAGED Fm(INCH/HR) =  0.08
  AREA-AVERAGED Fp(INCH/HR) =  0.25
  AREA-AVERAGED Ap =  0.31
  EFFECTIVE STREAM AREA(ACRES) =       2.53
  TOTAL STREAM AREA(ACRES) =       2.53
  PEAK FLOW RATE(CFS) AT CONFLUENCE =       3.16

****************************************************************************
```

```
 FLOW PROCESS FROM NODE     76.00 TO NODE     77.00 IS CODE =  21
----------------------------------------------------------------------------
 >>>>>RATIONAL METHOD INITIAL SUBAREA ANALYSIS<<<<<
 >>USE TIME-OF-CONCENTRATION NOMOGRAPH FOR INITIAL SUBAREA<<
============================================================================
 INITIAL SUBAREA FLOW-LENGTH(FEET) =   330.00
 ELEVATION DATA: UPSTREAM(FEET) =     37.10  DOWNSTREAM(FEET) =     35.10

 Tc = K*[(LENGTH** 3.00)/(ELEVATION CHANGE)]**0.20
 SUBAREA ANALYSIS USED MINIMUM Tc(MIN.) =   10.167
 *   2 YEAR RAINFALL INTENSITY(INCH/HR) =  1.506
 SUBAREA Tc AND LOSS RATE DATA(AMC  I ):
  DEVELOPMENT TYPE/      SCS SOIL   AREA      Fp         Ap     SCS   Tc
      LAND USE            GROUP   (ACRES)  (INCH/HR)  (DECIMAL)  CN  (MIN.)
 CONDOMINIUMS               C        2.10      0.25     0.350    50   10.17
 SUBAREA AVERAGE PERVIOUS LOSS RATE, Fp(INCH/HR) =  0.25
 SUBAREA AVERAGE PERVIOUS AREA FRACTION, Ap =  0.350
 SUBAREA RUNOFF(CFS) =      2.68
 TOTAL AREA(ACRES) =      2.10   PEAK FLOW RATE(CFS) =      2.68

****************************************************************************
 FLOW PROCESS FROM NODE     77.00 TO NODE     78.00 IS CODE =  62
----------------------------------------------------------------------------
 >>>>>COMPUTE STREET FLOW TRAVEL TIME THRU SUBAREA<<<<<
 >>>>>(STREET TABLE SECTION #  1 USED)<<<<<
============================================================================
 UPSTREAM ELEVATION(FEET) =   35.10  DOWNSTREAM ELEVATION(FEET) =   34.30
 STREET LENGTH(FEET) =   119.00   CURB HEIGHT(INCHES) =  8.0
 STREET HALFWIDTH(FEET) = 30.00

 DISTANCE FROM CROWN TO CROSSFALL GRADEBREAK(FEET) =  20.00
 INSIDE STREET CROSSFALL(DECIMAL) =  0.018
 OUTSIDE STREET CROSSFALL(DECIMAL)  =  0.018

 SPECIFIED NUMBER OF HALFSTREETS CARRYING RUNOFF =  1
 STREET PARKWAY CROSSFALL(DECIMAL)  =  0.020
 Manning's FRICTION FACTOR for Streetflow Section(curb-to-curb) =   0.0150
 Manning's FRICTION FACTOR for Back-of-Walk Flow Section =   0.0200

   **TRAVEL TIME COMPUTED USING ESTIMATED FLOW(CFS) =       3.62
   STREETFLOW MODEL RESULTS USING ESTIMATED FLOW:
   STREET FLOW DEPTH(FEET) =  0.40
   HALFSTREET FLOOD WIDTH(FEET) =   13.24
   AVERAGE FLOW VELOCITY(FEET/SEC.) =    2.06
   PRODUCT OF DEPTH&VELOCITY(FT*FT/SEC.) =    0.82
 STREET FLOW TRAVEL TIME(MIN.) =   0.96   Tc(MIN.) =   11.13
 *   2 YEAR RAINFALL INTENSITY(INCH/HR) =  1.430
 SUBAREA LOSS RATE DATA(AMC  I ):
  DEVELOPMENT TYPE/      SCS SOIL   AREA      Fp         Ap     SCS
      LAND USE            GROUP   (ACRES)  (INCH/HR)  (DECIMAL)  CN
 CONDOMINIUMS               C        1.55      0.25     0.350    50
 SUBAREA AVERAGE PERVIOUS LOSS RATE, Fp(INCH/HR) =  0.25
 SUBAREA AVERAGE PERVIOUS AREA FRACTION, Ap =  0.350
 SUBAREA AREA(ACRES) =    1.55      SUBAREA RUNOFF(CFS) =    1.87
 EFFECTIVE AREA(ACRES) =      3.65    AREA-AVERAGED Fm(INCH/HR) =  0.09
 AREA-AVERAGED Fp(INCH/HR) =  0.25  AREA-AVERAGED Ap =  0.35
 TOTAL AREA(ACRES) =        3.6        PEAK FLOW RATE(CFS) =       4.41

 END OF SUBAREA STREET FLOW HYDRAULICS:
 DEPTH(FEET) = 0.42   HALFSTREET FLOOD WIDTH(FEET) =  14.34
 FLOW VELOCITY(FEET/SEC.) =  2.17   DEPTH*VELOCITY(FT*FT/SEC.) =   0.91
 LONGEST FLOWPATH FROM NODE     76.00 TO NODE     78.00 =     449.00 FEET.
```

```
****************************************************************************
  FLOW PROCESS FROM NODE     78.00 TO NODE     72.00 IS CODE =  31
----------------------------------------------------------------------------
  >>>>>COMPUTE PIPE-FLOW TRAVEL TIME THRU SUBAREA<<<<<
  >>>>>USING COMPUTER-ESTIMATED PIPESIZE (NON-PRESSURE FLOW)<<<<<
============================================================================
  ELEVATION DATA: UPSTREAM(FEET) =    29.50  DOWNSTREAM(FEET) =    29.20
  FLOW LENGTH(FEET) =    15.00   MANNING'S N =  0.013
  DEPTH OF FLOW IN  12.0 INCH PIPE IS   9.1 INCHES
  PIPE-FLOW VELOCITY(FEET/SEC.) =   6.91
  ESTIMATED PIPE DIAMETER(INCH) =  12.00    NUMBER OF PIPES =   1
  PIPE-FLOW(CFS) =       4.41
  PIPE TRAVEL TIME(MIN.) =   0.04    Tc(MIN.) =   11.17
  LONGEST FLOWPATH FROM NODE     76.00 TO NODE     72.00 =     464.00 FEET.

****************************************************************************
  FLOW PROCESS FROM NODE     72.00 TO NODE     72.00 IS CODE =   1
----------------------------------------------------------------------------
  >>>>>DESIGNATE INDEPENDENT STREAM FOR CONFLUENCE<<<<<
  >>>>>AND COMPUTE VARIOUS CONFLUENCED STREAM VALUES<<<<<
============================================================================
  TOTAL NUMBER OF STREAMS =  3
  CONFLUENCE VALUES USED FOR INDEPENDENT STREAM  3 ARE:
  TIME OF CONCENTRATION(MIN.) =   11.17
  RAINFALL INTENSITY(INCH/HR) =   1.43
  AREA-AVERAGED Fm(INCH/HR) =  0.09
  AREA-AVERAGED Fp(INCH/HR) =  0.25
  AREA-AVERAGED Ap =  0.35
  EFFECTIVE STREAM AREA(ACRES) =       3.65
  TOTAL STREAM AREA(ACRES) =       3.65
  PEAK FLOW RATE(CFS) AT CONFLUENCE =       4.41

  ** CONFLUENCE DATA **
   STREAM       Q      Tc   Intensity   Fp(Fm)     Ap     Ae     HEADWATER
   NUMBER     (CFS)  (MIN.) (INCH/HR) (INCH/HR)         (ACRES)    NODE
      1        6.01   10.56    1.474  0.25( 0.03) 0.10       4.1      70.00
      2        3.16   10.75    1.459  0.25( 0.08) 0.31       2.5      73.00
      3        4.41   11.17    1.427  0.25( 0.09) 0.35       3.6      76.00

  RAINFALL INTENSITY AND TIME OF CONCENTRATION RATIO
  CONFLUENCE FORMULA USED FOR  3 STREAMS.

  ** PEAK FLOW RATE TABLE **
   STREAM       Q      Tc   Intensity   Fp(Fm)     Ap     Ae     HEADWATER
   NUMBER     (CFS)  (MIN.) (INCH/HR) (INCH/HR)         (ACRES)    NODE
      1       13.45   10.56    1.474  0.25( 0.06) 0.24      10.0      70.00
      2       13.44   10.75    1.459  0.25( 0.06) 0.24      10.1      73.00
      3       13.31   11.17    1.427  0.25( 0.06) 0.24      10.2      76.00

  COMPUTED CONFLUENCE ESTIMATES ARE AS FOLLOWS:
  PEAK FLOW RATE(CFS) =      13.45    Tc(MIN.) =    10.56
  EFFECTIVE AREA(ACRES) =      10.01   AREA-AVERAGED Fm(INCH/HR) =  0.06
  AREA-AVERAGED Fp(INCH/HR) =  0.25  AREA-AVERAGED Ap =  0.24
  TOTAL AREA(ACRES) =       10.2
  LONGEST FLOWPATH FROM NODE     70.00 TO NODE     72.00 =     702.00 FEET.

****************************************************************************
  FLOW PROCESS FROM NODE     72.00 TO NODE     79.00 IS CODE =  31
----------------------------------------------------------------------------
  >>>>>COMPUTE PIPE-FLOW TRAVEL TIME THRU SUBAREA<<<<<
  >>>>>USING COMPUTER-ESTIMATED PIPESIZE (NON-PRESSURE FLOW)<<<<<
```

```
==============================================================================
  ELEVATION DATA: UPSTREAM(FEET) =    29.20  DOWNSTREAM(FEET) =    27.80
  FLOW LENGTH(FEET) =   451.00   MANNING'S N =  0.013
  DEPTH OF FLOW IN  27.0 INCH PIPE IS  18.6 INCHES
  PIPE-FLOW VELOCITY(FEET/SEC.) =   4.59
  ESTIMATED PIPE DIAMETER(INCH) =  27.00    NUMBER OF PIPES =   1
  PIPE-FLOW(CFS) =      13.45
  PIPE TRAVEL TIME(MIN.) =   1.64    Tc(MIN.) =   12.20
  LONGEST FLOWPATH FROM NODE     70.00 TO NODE     79.00 =    1153.00 FEET.

****************************************************************************
  FLOW PROCESS FROM NODE     79.00 TO NODE     79.00 IS CODE =   1
----------------------------------------------------------------------------
  >>>>>DESIGNATE INDEPENDENT STREAM FOR CONFLUENCE<<<<<
============================================================================
  TOTAL NUMBER OF STREAMS =  3
  CONFLUENCE VALUES USED FOR INDEPENDENT STREAM  1 ARE:
  TIME OF CONCENTRATION(MIN.) =   12.20
  RAINFALL INTENSITY(INCH/HR) =   1.36
  AREA-AVERAGED Fm(INCH/HR) =  0.06
  AREA-AVERAGED Fp(INCH/HR) =  0.25
  AREA-AVERAGED Ap =  0.24
  EFFECTIVE STREAM AREA(ACRES) =      10.01
  TOTAL STREAM AREA(ACRES) =      10.25
  PEAK FLOW RATE(CFS) AT CONFLUENCE =      13.45

****************************************************************************
  FLOW PROCESS FROM NODE     76.00 TO NODE     80.00 IS CODE =  21
----------------------------------------------------------------------------
  >>>>>RATIONAL METHOD INITIAL SUBAREA ANALYSIS<<<<<
  >>USE TIME-OF-CONCENTRATION NOMOGRAPH FOR INITIAL SUBAREA<<
============================================================================
  INITIAL SUBAREA FLOW-LENGTH(FEET) =   330.00
  ELEVATION DATA: UPSTREAM(FEET) =     37.10  DOWNSTREAM(FEET) =     35.10

  Tc = K*[(LENGTH** 3.00)/(ELEVATION CHANGE)]**0.20
  SUBAREA ANALYSIS USED MINIMUM Tc(MIN.) =   10.167
  *   2 YEAR RAINFALL INTENSITY(INCH/HR) =  1.506
  SUBAREA Tc AND LOSS RATE DATA(AMC  I ):
   DEVELOPMENT TYPE/      SCS SOIL   AREA      Fp         Ap     SCS   Tc
        LAND USE           GROUP   (ACRES)  (INCH/HR)  (DECIMAL)  CN  (MIN.)
  CONDOMINIUMS               C        1.85      0.25     0.350    50   10.17
  SUBAREA AVERAGE PERVIOUS LOSS RATE, Fp(INCH/HR) =  0.25
  SUBAREA AVERAGE PERVIOUS AREA FRACTION, Ap =  0.350
  SUBAREA RUNOFF(CFS) =      2.36
  TOTAL AREA(ACRES) =      1.85   PEAK FLOW RATE(CFS) =      2.36

****************************************************************************
  FLOW PROCESS FROM NODE     80.00 TO NODE     81.00 IS CODE =  62
----------------------------------------------------------------------------
  >>>>>COMPUTE STREET FLOW TRAVEL TIME THRU SUBAREA<<<<<
  >>>>>(STREET TABLE SECTION #  1 USED)<<<<<
============================================================================
  UPSTREAM ELEVATION(FEET) =   35.10  DOWNSTREAM ELEVATION(FEET) =   33.90
  STREET LENGTH(FEET) =   148.00   CURB HEIGHT(INCHES) =  8.0
  STREET HALFWIDTH(FEET) = 30.00

  DISTANCE FROM CROWN TO CROSSFALL GRADEBREAK(FEET) =  20.00
  INSIDE STREET CROSSFALL(DECIMAL) =  0.018
  OUTSIDE STREET CROSSFALL(DECIMAL)  =  0.018

  SPECIFIED NUMBER OF HALFSTREETS CARRYING RUNOFF =  1
```

```
  STREET PARKWAY CROSSFALL(DECIMAL)  =  0.020
  Manning's FRICTION FACTOR for Streetflow Section(curb-to-curb) =   0.0150
  Manning's FRICTION FACTOR for Back-of-Walk Flow Section =   0.0200

    **TRAVEL TIME COMPUTED USING ESTIMATED FLOW(CFS) =       2.82
    STREETFLOW MODEL RESULTS USING ESTIMATED FLOW:
    STREET FLOW DEPTH(FEET) =  0.37
    HALFSTREET FLOOD WIDTH(FEET) =   11.37
    AVERAGE FLOW VELOCITY(FEET/SEC.) =    2.09
    PRODUCT OF DEPTH&VELOCITY(FT*FT/SEC.) =    0.77
  STREET FLOW TRAVEL TIME(MIN.) =   1.18   Tc(MIN.) =   11.35
  *   2 YEAR RAINFALL INTENSITY(INCH/HR) =  1.414
  SUBAREA LOSS RATE DATA(AMC  I ):
   DEVELOPMENT TYPE/      SCS SOIL   AREA      Fp         Ap     SCS
       LAND USE            GROUP   (ACRES)  (INCH/HR)  (DECIMAL)  CN
  CONDOMINIUMS               C        0.77      0.25     0.350    50
  SUBAREA AVERAGE PERVIOUS LOSS RATE, Fp(INCH/HR) =  0.25
  SUBAREA AVERAGE PERVIOUS AREA FRACTION, Ap =  0.350
  SUBAREA AREA(ACRES) =    0.77      SUBAREA RUNOFF(CFS) =    0.92
  EFFECTIVE AREA(ACRES) =      2.62    AREA-AVERAGED Fm(INCH/HR) =  0.09
  AREA-AVERAGED Fp(INCH/HR) =  0.25  AREA-AVERAGED Ap =  0.35
  TOTAL AREA(ACRES) =        2.6        PEAK FLOW RATE(CFS) =       3.13

  END OF SUBAREA STREET FLOW HYDRAULICS:
  DEPTH(FEET) = 0.38   HALFSTREET FLOOD WIDTH(FEET) =  11.91
  FLOW VELOCITY(FEET/SEC.) =  2.14   DEPTH*VELOCITY(FT*FT/SEC.) =   0.80
  LONGEST FLOWPATH FROM NODE     76.00 TO NODE     81.00 =     478.00 FEET.

****************************************************************************
  FLOW PROCESS FROM NODE     81.00 TO NODE     79.00 IS CODE =  31
----------------------------------------------------------------------------
  >>>>>COMPUTE PIPE-FLOW TRAVEL TIME THRU SUBAREA<<<<<
  >>>>>USING COMPUTER-ESTIMATED PIPESIZE (NON-PRESSURE FLOW)<<<<<
============================================================================
  ELEVATION DATA: UPSTREAM(FEET) =    28.10  DOWNSTREAM(FEET) =    27.80
  FLOW LENGTH(FEET) =    12.00   MANNING'S N =  0.013
  DEPTH OF FLOW IN  12.0 INCH PIPE IS   6.6 INCHES
  PIPE-FLOW VELOCITY(FEET/SEC.) =   7.06
  ESTIMATED PIPE DIAMETER(INCH) =  12.00    NUMBER OF PIPES =   1
  PIPE-FLOW(CFS) =       3.13
  PIPE TRAVEL TIME(MIN.) =   0.03    Tc(MIN.) =   11.37
  LONGEST FLOWPATH FROM NODE     76.00 TO NODE     79.00 =     490.00 FEET.

****************************************************************************
  FLOW PROCESS FROM NODE     79.00 TO NODE     79.00 IS CODE =   1
----------------------------------------------------------------------------
  >>>>>DESIGNATE INDEPENDENT STREAM FOR CONFLUENCE<<<<<
============================================================================
  TOTAL NUMBER OF STREAMS =  3
  CONFLUENCE VALUES USED FOR INDEPENDENT STREAM  2 ARE:
  TIME OF CONCENTRATION(MIN.) =   11.37
  RAINFALL INTENSITY(INCH/HR) =   1.41
  AREA-AVERAGED Fm(INCH/HR) =  0.09
  AREA-AVERAGED Fp(INCH/HR) =  0.25
  AREA-AVERAGED Ap =  0.35
  EFFECTIVE STREAM AREA(ACRES) =       2.62
  TOTAL STREAM AREA(ACRES) =       2.62
  PEAK FLOW RATE(CFS) AT CONFLUENCE =       3.13

****************************************************************************
  FLOW PROCESS FROM NODE     82.00 TO NODE     83.00 IS CODE =  21
----------------------------------------------------------------------------
```

```
  >>>>>RATIONAL METHOD INITIAL SUBAREA ANALYSIS<<<<<
  >>USE TIME-OF-CONCENTRATION NOMOGRAPH FOR INITIAL SUBAREA<<
================================================================================
  INITIAL SUBAREA FLOW-LENGTH(FEET) =   320.00
  ELEVATION DATA: UPSTREAM(FEET) =     36.40  DOWNSTREAM(FEET) =     33.90

  Tc = K*[(LENGTH** 3.00)/(ELEVATION CHANGE)]**0.20
  SUBAREA ANALYSIS USED MINIMUM Tc(MIN.) =    9.546
  *   2 YEAR RAINFALL INTENSITY(INCH/HR) =  1.562
  SUBAREA Tc AND LOSS RATE DATA(AMC  I ):
   DEVELOPMENT TYPE/      SCS SOIL   AREA      Fp         Ap     SCS   Tc
       LAND USE            GROUP   (ACRES)  (INCH/HR)  (DECIMAL)  CN  (MIN.)
  CONDOMINIUMS               C        1.10      0.25     0.350    50    9.55
  SUBAREA AVERAGE PERVIOUS LOSS RATE, Fp(INCH/HR) =  0.25
  SUBAREA AVERAGE PERVIOUS AREA FRACTION, Ap =  0.350
  SUBAREA RUNOFF(CFS) =      1.46
  TOTAL AREA(ACRES) =      1.10   PEAK FLOW RATE(CFS) =      1.46

********************************************************************************
  FLOW PROCESS FROM NODE     83.00 TO NODE     79.00 IS CODE =  31
--------------------------------------------------------------------------------
  >>>>>COMPUTE PIPE-FLOW TRAVEL TIME THRU SUBAREA<<<<<
  >>>>>USING COMPUTER-ESTIMATED PIPESIZE (NON-PRESSURE FLOW)<<<<<
================================================================================
  ELEVATION DATA: UPSTREAM(FEET) =    28.10  DOWNSTREAM(FEET) =    27.80
  FLOW LENGTH(FEET) =    10.00   MANNING'S N =  0.013
  DEPTH OF FLOW IN   9.0 INCH PIPE IS   4.7 INCHES
  PIPE-FLOW VELOCITY(FEET/SEC.) =   6.26
  ESTIMATED PIPE DIAMETER(INCH) =   9.00    NUMBER OF PIPES =   1
  PIPE-FLOW(CFS) =       1.46
  PIPE TRAVEL TIME(MIN.) =   0.03    Tc(MIN.) =    9.57
  LONGEST FLOWPATH FROM NODE     82.00 TO NODE     79.00 =     330.00 FEET.

********************************************************************************
  FLOW PROCESS FROM NODE     79.00 TO NODE     79.00 IS CODE =   1
--------------------------------------------------------------------------------
  >>>>>DESIGNATE INDEPENDENT STREAM FOR CONFLUENCE<<<<<
  >>>>>AND COMPUTE VARIOUS CONFLUENCED STREAM VALUES<<<<<
================================================================================
  TOTAL NUMBER OF STREAMS =  3
  CONFLUENCE VALUES USED FOR INDEPENDENT STREAM  3 ARE:
  TIME OF CONCENTRATION(MIN.) =    9.57
  RAINFALL INTENSITY(INCH/HR) =   1.56
  AREA-AVERAGED Fm(INCH/HR) =  0.09
  AREA-AVERAGED Fp(INCH/HR) =  0.25
  AREA-AVERAGED Ap =  0.35
  EFFECTIVE STREAM AREA(ACRES) =       1.10
  TOTAL STREAM AREA(ACRES) =       1.10
  PEAK FLOW RATE(CFS) AT CONFLUENCE =       1.46

  ** CONFLUENCE DATA **
   STREAM       Q      Tc   Intensity   Fp(Fm)     Ap     Ae     HEADWATER
   NUMBER     (CFS)  (MIN.) (INCH/HR) (INCH/HR)         (ACRES)    NODE
      1       13.45   12.20    1.357  0.25( 0.06) 0.24      10.0      70.00
      1       13.44   12.39    1.345  0.25( 0.06) 0.24      10.1      73.00
      1       13.31   12.81    1.319  0.25( 0.06) 0.24      10.2      76.00
      2        3.13   11.37    1.412  0.25( 0.09) 0.35       2.6      76.00
      3        1.46    9.57    1.559  0.25( 0.09) 0.35       1.1      82.00

  RAINFALL INTENSITY AND TIME OF CONCENTRATION RATIO
  CONFLUENCE FORMULA USED FOR  3 STREAMS.
```

```
  ** PEAK FLOW RATE TABLE **
   STREAM       Q      Tc   Intensity   Fp(Fm)     Ap     Ae     HEADWATER
   NUMBER     (CFS)  (MIN.) (INCH/HR) (INCH/HR)         (ACRES)    NODE
      1       16.59    9.57    1.559  0.25( 0.07) 0.27      11.2      82.00
      2       17.52   11.37    1.412  0.25( 0.07) 0.27      13.1      76.00
      3       17.71   12.20    1.357  0.25( 0.07) 0.27      13.7      70.00
      4       17.66   12.39    1.345  0.25( 0.07) 0.27      13.8      73.00
      5       17.44   12.81    1.319  0.25( 0.07) 0.27      14.0      76.00

  COMPUTED CONFLUENCE ESTIMATES ARE AS FOLLOWS:
  PEAK FLOW RATE(CFS) =      17.71    Tc(MIN.) =    12.20
  EFFECTIVE AREA(ACRES) =      13.73   AREA-AVERAGED Fm(INCH/HR) =  0.07
  AREA-AVERAGED Fp(INCH/HR) =  0.25  AREA-AVERAGED Ap =  0.27
  TOTAL AREA(ACRES) =       14.0
  LONGEST FLOWPATH FROM NODE     70.00 TO NODE     79.00 =    1153.00 FEET.

****************************************************************************
  FLOW PROCESS FROM NODE     79.00 TO NODE     84.00 IS CODE =  31
----------------------------------------------------------------------------
  >>>>>COMPUTE PIPE-FLOW TRAVEL TIME THRU SUBAREA<<<<<
  >>>>>USING COMPUTER-ESTIMATED PIPESIZE (NON-PRESSURE FLOW)<<<<<
============================================================================
  ELEVATION DATA: UPSTREAM(FEET) =    27.80  DOWNSTREAM(FEET) =    27.40
  FLOW LENGTH(FEET) =   144.00   MANNING'S N =  0.013
  DEPTH OF FLOW IN  30.0 INCH PIPE IS  21.5 INCHES
  PIPE-FLOW VELOCITY(FEET/SEC.) =   4.70
  ESTIMATED PIPE DIAMETER(INCH) =  30.00    NUMBER OF PIPES =   1
  PIPE-FLOW(CFS) =      17.71
  PIPE TRAVEL TIME(MIN.) =   0.51    Tc(MIN.) =   12.71
  LONGEST FLOWPATH FROM NODE     70.00 TO NODE     84.00 =    1297.00 FEET.

****************************************************************************
  FLOW PROCESS FROM NODE     84.00 TO NODE     84.00 IS CODE =  81
----------------------------------------------------------------------------
  >>>>>ADDITION OF SUBAREA TO MAINLINE PEAK FLOW<<<<<
============================================================================
  MAINLINE Tc(MIN.) =   12.71
  *   2 YEAR RAINFALL INTENSITY(INCH/HR) =  1.325
  SUBAREA LOSS RATE DATA(AMC  I ):
   DEVELOPMENT TYPE/      SCS SOIL   AREA      Fp         Ap     SCS
       LAND USE            GROUP   (ACRES)  (INCH/HR)  (DECIMAL)  CN
  COMMERCIAL                 C        0.62      0.25     0.100    50
  SUBAREA AVERAGE PERVIOUS LOSS RATE, Fp(INCH/HR) =  0.25
  SUBAREA AVERAGE PERVIOUS AREA FRACTION, Ap =  0.100
  SUBAREA AREA(ACRES) =    0.62      SUBAREA RUNOFF(CFS) =    0.73
  EFFECTIVE AREA(ACRES) =     14.35   AREA-AVERAGED Fm(INCH/HR) =  0.07
  AREA-AVERAGED Fp(INCH/HR) =  0.25  AREA-AVERAGED Ap =  0.26
  TOTAL AREA(ACRES) =       14.6       PEAK FLOW RATE(CFS) =      17.71
  NOTE: PEAK FLOW RATE DEFAULTED TO UPSTREAM VALUE

****************************************************************************
  FLOW PROCESS FROM NODE     84.00 TO NODE     85.00 IS CODE =  31
----------------------------------------------------------------------------
  >>>>>COMPUTE PIPE-FLOW TRAVEL TIME THRU SUBAREA<<<<<
  >>>>>USING COMPUTER-ESTIMATED PIPESIZE (NON-PRESSURE FLOW)<<<<<
============================================================================
  ELEVATION DATA: UPSTREAM(FEET) =    27.40  DOWNSTREAM(FEET) =    27.30
  FLOW LENGTH(FEET) =    26.00   MANNING'S N =  0.013
  DEPTH OF FLOW IN  27.0 INCH PIPE IS  21.5 INCHES
  PIPE-FLOW VELOCITY(FEET/SEC.) =   5.22
  ESTIMATED PIPE DIAMETER(INCH) =  27.00    NUMBER OF PIPES =   1
  PIPE-FLOW(CFS) =      17.71
```

```
  PIPE TRAVEL TIME(MIN.) =   0.08    Tc(MIN.) =   12.79
  LONGEST FLOWPATH FROM NODE     70.00 TO NODE     85.00 =    1323.00 FEET.

+----------------------------------------------------------------------------+
| AREA 'G'                                                                   |
|                                                                            |
|                                                                            |
+----------------------------------------------------------------------------+

****************************************************************************
  FLOW PROCESS FROM NODE     90.00 TO NODE     91.00 IS CODE =  21
----------------------------------------------------------------------------
  >>>>>RATIONAL METHOD INITIAL SUBAREA ANALYSIS<<<<<
  >>USE TIME-OF-CONCENTRATION NOMOGRAPH FOR INITIAL SUBAREA<<
============================================================================
  INITIAL SUBAREA FLOW-LENGTH(FEET) =   253.00
  ELEVATION DATA: UPSTREAM(FEET) =     37.50  DOWNSTREAM(FEET) =     37.00

  Tc = K*[(LENGTH** 3.00)/(ELEVATION CHANGE)]**0.20
  SUBAREA ANALYSIS USED MINIMUM Tc(MIN.) =    9.659
  *   2 YEAR RAINFALL INTENSITY(INCH/HR) =  1.551
  SUBAREA Tc AND LOSS RATE DATA(AMC  I ):
   DEVELOPMENT TYPE/      SCS SOIL   AREA      Fp         Ap     SCS   Tc
       LAND USE            GROUP   (ACRES)  (INCH/HR)  (DECIMAL)  CN  (MIN.)
  COMMERCIAL                 C        0.85      0.25     0.100    50    9.66
  SUBAREA AVERAGE PERVIOUS LOSS RATE, Fp(INCH/HR) =  0.25
  SUBAREA AVERAGE PERVIOUS AREA FRACTION, Ap =  0.100
  SUBAREA RUNOFF(CFS) =      1.17
  TOTAL AREA(ACRES) =      0.85   PEAK FLOW RATE(CFS) =      1.17

****************************************************************************
  FLOW PROCESS FROM NODE     91.00 TO NODE     92.00 IS CODE =  31
----------------------------------------------------------------------------
  >>>>>COMPUTE PIPE-FLOW TRAVEL TIME THRU SUBAREA<<<<<
  >>>>>USING COMPUTER-ESTIMATED PIPESIZE (NON-PRESSURE FLOW)<<<<<
============================================================================
  ELEVATION DATA: UPSTREAM(FEET) =    32.50  DOWNSTREAM(FEET) =    31.00
  FLOW LENGTH(FEET) =   152.00   MANNING'S N =  0.013
  DEPTH OF FLOW IN   9.0 INCH PIPE IS   5.8 INCHES
  PIPE-FLOW VELOCITY(FEET/SEC.) =   3.87
  ESTIMATED PIPE DIAMETER(INCH) =   9.00    NUMBER OF PIPES =   1
  PIPE-FLOW(CFS) =       1.17
  PIPE TRAVEL TIME(MIN.) =   0.65    Tc(MIN.) =   10.31
  LONGEST FLOWPATH FROM NODE     90.00 TO NODE     92.00 =     405.00 FEET.

****************************************************************************
  FLOW PROCESS FROM NODE     92.00 TO NODE     92.00 IS CODE =  81
----------------------------------------------------------------------------
  >>>>>ADDITION OF SUBAREA TO MAINLINE PEAK FLOW<<<<<
============================================================================
  MAINLINE Tc(MIN.) =   10.31
  *   2 YEAR RAINFALL INTENSITY(INCH/HR) =  1.494
  SUBAREA LOSS RATE DATA(AMC  I ):
   DEVELOPMENT TYPE/      SCS SOIL   AREA      Fp         Ap     SCS
       LAND USE            GROUP   (ACRES)  (INCH/HR)  (DECIMAL)  CN
  COMMERCIAL                 C        0.58      0.25     0.100    50
  SUBAREA AVERAGE PERVIOUS LOSS RATE, Fp(INCH/HR) =  0.25
  SUBAREA AVERAGE PERVIOUS AREA FRACTION, Ap =  0.100
  SUBAREA AREA(ACRES) =    0.58      SUBAREA RUNOFF(CFS) =    0.77
  EFFECTIVE AREA(ACRES) =      1.43   AREA-AVERAGED Fm(INCH/HR) =  0.03
  AREA-AVERAGED Fp(INCH/HR) =  0.25  AREA-AVERAGED Ap =  0.10
  TOTAL AREA(ACRES) =        1.4       PEAK FLOW RATE(CFS) =       1.89
```

```
================================================================================
  END OF STUDY SUMMARY:
  TOTAL AREA(ACRES)     =        1.4  TC(MIN.) =     10.31
  EFFECTIVE AREA(ACRES) =      1.43  AREA-AVERAGED Fm(INCH/HR)=  0.03
  AREA-AVERAGED Fp(INCH/HR) =  0.25  AREA-AVERAGED Ap = 0.100
  PEAK FLOW RATE(CFS)   =       1.89
================================================================================
================================================================================
  END OF RATIONAL METHOD ANALYSIS
```

```
**************************************************************************
          NON-HOMOGENEOUS WATERSHED AREA-AVERAGED LOSS RATE (Fm)
                    AND LOW LOSS FRACTION ESTIMATIONS
==========================================================================
         (C) Copyright 1989-2014 Advanced Engineering Software (aes)
             Ver. 21.0  Release Date: 06/01/2014  License ID 1355

                            Analysis prepared by:

                              Fuscoe Engineering
                               16795 Von Karman
                                  Suite 100
                               Irvine, CA 92606

**************************************************************************
--------------------------------------------------------------------------

 Problem Descriptions:
  RELATED BRISTOL
  2-YEAR HYDROGRAPH
  PROPOSED CONDITION
==========================================================================
*** NON-HOMOGENEOUS WATERSHED AREA-AVERAGED LOSS RATE (Fm)
    AND LOW LOSS FRACTION ESTIMATIONS FOR AMC I:

    TOTAL 24-HOUR DURATION RAINFALL DEPTH =     2.05 (inches)

    SOIL-COVER     AREA      PERCENT OF    SCS CURVE    LOSS RATE
       TYPE      (Acres)   PERVIOUS AREA     NUMBER    Fp(in./hr.)    YIELD
         1         41.15       14.00       69.(AMC II)     0.250       0.765

    TOTAL AREA (Acres) =     41.15

    AREA-AVERAGED LOSS RATE, Fm (in./hr.) =  0.035

    AREA-AVERAGED LOW LOSS FRACTION, Y = 0.235
==========================================================================

**************************************************************************
          NON-HOMOGENEOUS WATERSHED AREA-AVERAGED LOSS RATE (Fm)
                    AND LOW LOSS FRACTION ESTIMATIONS
==========================================================================
         (C) Copyright 1989-2014 Advanced Engineering Software (aes)
             Ver. 21.0  Release Date: 06/01/2014  License ID 1355

                            Analysis prepared by:

                              Fuscoe Engineering
                               16795 Von Karman
                                  Suite 100
                               Irvine, CA 92606

**************************************************************************
--------------------------------------------------------------------------

 Problem Descriptions:
```

```
  RELATED BRISTOL
  2-YEAR HYDROGRAPH
  PROPOSED CONDITION
================================================================================
*** NON-HOMOGENEOUS WATERSHED AREA-AVERAGED LOSS RATE (Fm)
    AND LOW LOSS FRACTION ESTIMATIONS FOR AMC I:

    TOTAL 24-HOUR DURATION RAINFALL DEPTH =     2.05 (inches)

    SOIL-COVER     AREA      PERCENT OF    SCS CURVE    LOSS RATE
       TYPE      (Acres)   PERVIOUS AREA     NUMBER    Fp(in./hr.)    YIELD
         1         41.15       14.00       69.(AMC II)     0.250       0.765

    TOTAL AREA (Acres) =     41.15

    AREA-AVERAGED LOSS RATE, Fm (in./hr.) =  0.035

    AREA-AVERAGED LOW LOSS FRACTION, Y = 0.235
================================================================================

 Problem Descriptions:
  RELATED BRISTOL
  2-YEAR HYDROGRAPH
  PROPOSED CONDITION (CALIB COEFF = 0.9412)
--------------------------------------------------------------------------------


    RATIONAL METHOD CALIBRATION COEFFICIENT = 0.94
    TOTAL CATCHMENT AREA(ACRES) =   41.15
    SOIL-LOSS RATE, Fm,(INCH/HR) =  0.025
    LOW LOSS FRACTION = 0.235
    TIME OF CONCENTRATION(MIN.) = 11.40
    SMALL AREA PEAK Q COMPUTED USING PEAK FLOW RATE FORMULA
    ORANGE COUNTY "VALLEY" RAINFALL VALUES ARE USED
    RETURN FREQUENCY(YEARS) =   2
       5-MINUTE POINT RAINFALL VALUE(INCHES) =  0.19
      30-MINUTE POINT RAINFALL VALUE(INCHES) =  0.40
       1-HOUR   POINT RAINFALL VALUE(INCHES) =  0.53
       3-HOUR   POINT RAINFALL VALUE(INCHES) =  0.89
       6-HOUR   POINT RAINFALL VALUE(INCHES) =  1.22
      24-HOUR   POINT RAINFALL VALUE(INCHES) =  2.05

--------------------------------------------------------------------------------

    TOTAL CATCHMENT   RUNOFF  VOLUME(ACRE-FEET) =     5.47
    TOTAL CATCHMENT SOIL-LOSS VOLUME(ACRE-FEET) =     1.55

********************************************************************************
  TIME     VOLUME       Q    0.       15.0      30.0      45.0      60.0
 (HOURS)    (AF)      (CFS)
--------------------------------------------------------------------------------
  0.04      0.0000      0.00  Q         .         .         .         .
  0.23      0.0075      0.95  Q         .         .         .         .
  0.42      0.0224      0.96  Q         .         .         .         .
  0.61      0.0375      0.97  Q         .         .         .         .
  0.80      0.0527      0.97  Q         .         .         .         .
  0.99      0.0681      0.98  Q         .         .         .         .
```

1.18	0.0835	0.99	Q	.	.	.	.
1.37	0.0991	1.00	Q	.	.	.	.
1.56	0.1148	1.00	Q	.	.	.	.
1.75	0.1306	1.01	Q	.	.	.	.
1.94	0.1465	1.02	Q	.	.	.	.
2.13	0.1626	1.03	Q	.	.	.	.
2.32	0.1788	1.04	Q	.	.	.	.
2.51	0.1952	1.05	Q	.	.	.	.
2.70	0.2117	1.05	Q	.	.	.	.
2.89	0.2284	1.07	Q	.	.	.	.
3.08	0.2452	1.07	Q	.	.	.	.
3.27	0.2621	1.09	Q	.	.	.	.
3.46	0.2792	1.09	Q	.	.	.	.
3.65	0.2965	1.11	Q	.	.	.	.
3.84	0.3139	1.11	Q	.	.	.	.
4.03	0.3316	1.13	Q	.	.	.	.
4.22	0.3493	1.14	Q	.	.	.	.
4.41	0.3673	1.15	Q	.	.	.	.
4.60	0.3854	1.16	Q	.	.	.	.
4.79	0.4038	1.18	Q	.	.	.	.
4.98	0.4223	1.18	Q	.	.	.	.
5.17	0.4410	1.20	Q	.	.	.	.
5.36	0.4599	1.21	Q	.	.	.	.
5.55	0.4791	1.23	Q	.	.	.	.
5.74	0.4984	1.24	Q	.	.	.	.
5.93	0.5180	1.26	Q	.	.	.	.
6.12	0.5378	1.27	Q	.	.	.	.
6.31	0.5578	1.29	Q	.	.	.	.
6.50	0.5781	1.30	Q	.	.	.	.
6.69	0.5986	1.32	Q	.	.	.	.
6.88	0.6194	1.33	Q	.	.	.	.
7.07	0.6405	1.35	Q	.	.	.	.
7.26	0.6618	1.36	Q	.	.	.	.
7.45	0.6834	1.39	Q	.	.	.	.
7.64	0.7053	1.40	Q	.	.	.	.
7.83	0.7276	1.43	Q	.	.	.	.
8.02	0.7501	1.44	Q	.	.	.	.
8.21	0.7730	1.47	Q	.	.	.	.
8.40	0.7962	1.49	Q	.	.	.	.
8.59	0.8198	1.52	.Q	.	.	.	.
8.78	0.8438	1.53	.Q	.	.	.	.
8.97	0.8681	1.57	.Q	.	.	.	.
9.16	0.8929	1.58	.Q	.	.	.	.
9.35	0.9180	1.62	.Q	.	.	.	.
9.54	0.9437	1.64	.Q	.	.	.	.
9.73	0.9697	1.68	.Q	.	.	.	.
9.92	0.9963	1.70	.Q	.	.	.	.
10.11	1.0234	1.75	.Q	.	.	.	.
10.30	1.0510	1.77	.Q	.	.	.	.
10.49	1.0792	1.82	.Q	.	.	.	.
10.68	1.1080	1.85	.Q	.	.	.	.
10.87	1.1374	1.90	.Q	.	.	.	.
11.06	1.1675	1.93	.Q	.	.	.	.
11.25	1.1983	1.99	.Q	.	.	.	.
11.44	1.2298	2.03	.Q	.	.	.	.
11.63	1.2622	2.10	.Q	.	.	.	.
11.82	1.2954	2.13	.Q	.	.	.	.

12.01	1.3295	2.22	.Q . . . .
12.20	1.3669	2.54	.Q . . . .
12.39	1.4092	2.84	.Q . . . .
12.58	1.4543	2.90	.Q . . . .
12.77	1.5007	3.02	. Q . . . .
12.96	1.5486	3.08	. Q . . . .
13.15	1.5982	3.24	. Q . . . .
13.34	1.6499	3.34	. Q . . . .
13.53	1.7041	3.57	. Q . . . .
13.72	1.7611	3.69	. Q . . . .
13.91	1.8213	3.98	. Q . . . .
14.10	1.8850	4.14	. Q . . . .
14.29	1.9544	4.70	. Q . . . .
14.48	2.0300	4.92	. Q . . . .
14.67	2.1114	5.44	. Q . . . .
14.86	2.1993	5.76	. Q . . . .
15.05	2.2960	6.55	. Q . . . .
15.24	2.4029	7.07	. Q . . . .
15.43	2.5224	8.15	. Q . . . .
15.62	2.6507	8.20	. Q . . . .
15.81	2.8114	12.27	. Q . . . .
16.00	3.0431	17.24	. .Q . . .
16.19	3.5991	53.58	. . . . Q .
16.38	4.0958	9.69	. Q . . . .
16.57	4.2323	7.70	. Q . . . .
16.76	4.3409	6.12	. Q . . . .
16.95	4.4295	5.17	. Q . . . .
17.14	4.5051	4.47	. Q . . . .
17.33	4.5703	3.83	. Q . . . .
17.52	4.6274	3.45	. Q . . . .
17.71	4.6792	3.15	. Q . . . .
17.90	4.7271	2.96	.Q . . . .
18.09	4.7723	2.79	.Q . . . .
18.28	4.8113	2.17	.Q . . . .
18.47	4.8445	2.06	.Q . . . .
18.66	4.8761	1.96	.Q . . . .
18.85	4.9062	1.87	.Q . . . .
19.04	4.9350	1.79	.Q . . . .
19.23	4.9626	1.72	.Q . . . .
19.42	4.9892	1.66	.Q . . . .
19.61	5.0148	1.60	.Q . . . .
19.80	5.0396	1.55	.Q . . . .
19.99	5.0635	1.50	.Q . . . .
20.18	5.0868	1.46	Q . . . .
20.37	5.1093	1.42	Q . . . .
20.56	5.1312	1.38	Q . . . .
20.75	5.1526	1.34	Q . . . .
20.94	5.1734	1.31	Q . . . .
21.13	5.1937	1.28	Q . . . .
21.32	5.2135	1.25	Q . . . .
21.51	5.2328	1.22	Q . . . .
21.70	5.2517	1.19	Q . . . .
21.89	5.2703	1.17	Q . . . .
22.08	5.2884	1.14	Q . . . .
22.27	5.3062	1.12	Q . . . .
22.46	5.3236	1.10	Q . . . .
22.65	5.3407	1.08	Q . . . .

22.84	5.3575	1.06	Q	.	.	.	.
23.03	5.3740	1.04	Q	.	.	.	.
23.22	5.3903	1.02	Q	.	.	.	.
23.41	5.4062	1.01	Q	.	.	.	.
23.60	5.4219	0.99	Q	.	.	.	.
23.79	5.4374	0.98	Q	.	.	.	.
23.98	5.4526	0.96	Q	.	.	.	.
24.17	5.4676	0.95	Q	.	.	.	.
24.36	5.4750	0.00	Q	.	.	.	.

TIME DURATION(minutes) OF PERCENTILES OF ESTIMATED PEAK FLOW RATE:
(Note: 100% of Peak Flow Rate estimate assumed to have
an instantaneous time duration)

Percentile of Estimated Peak Flow Rate	Duration (minutes)
0%	1447.8
10%	136.8
20%	34.2
30%	22.8
40%	11.4
50%	11.4
60%	11.4
70%	11.4
80%	11.4
90%	11.4

ATTACHMENT I

SOIL TYPE DOCUMENTATION

OC Stormwater Program Land Development Tool

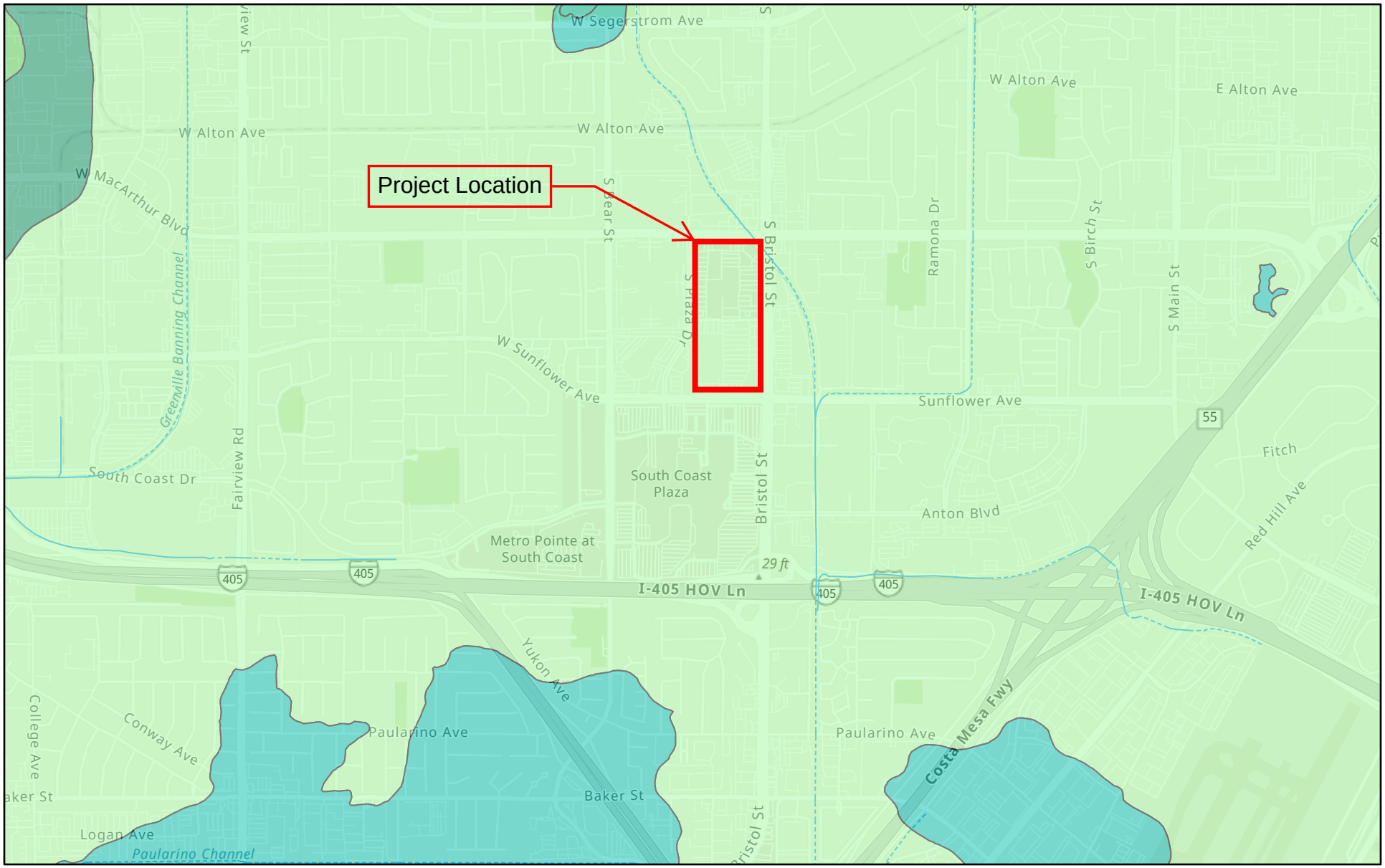

3/30/2023

Soil

A

B

C Regional Channels

D

Open Conveyance

Closed Conveyance

1:25,609

0 0.17 0.35 0.7 mi

0 0.28 0.55 1.1 km

County of Los Angeles, California State Parks, Esri, HERE, Garmin, SafeGraph, GeoTechnologies, Inc, METI/NASA, USGS, Bureau of Land

Serena Ausili

From: Michael Givens <michaelg@groupdelta.com>
Sent: Thursday, March 30, 2023 1:54 PM
To: Sue Williams
Cc: Oriana Slasor; Serena Ausili; 622-015@fuscoe.tonicdm.com
Subject: RE: Related Bristol - Hydrologic Soil Type

Yes, we can report the factual information that the OCPW site has classified the site soils as Hydraulic Group C.

Thanks,

Michael Givens, PhD, PE, GE, PG
Group Delta Consultants, Inc.
Associate Engineer / Office Manager
Mobile: (949) 295-2348
michaelg@groupdelta.com

From: Sue Williams <SWilliams@fuscoe.com>
Sent: Thursday, March 30, 2023 1:50 PM
To: Michael Givens <michaelg@groupdelta.com>
Cc: Oriana Slasor <oslasor@fuscoe.com>; Serena Ausili <SAusili@fuscoe.com>; 622-015@fuscoe.tonicdm.com
Subject: FW: Related Bristol - Hydrologic Soil Type

Hi Michael,
Thanks again for your guidance on the hydrologic soil type. Per email below from the plan-checker, they take no exception to this conclusion. Regarding their request for an addendum at the time of grading application, they are requesting an addendum to the geotechnical report. Would this be something you would be willing to prepare when the time comes?
Thank you,
Sue

SUSAN WILLIAMS, PE, MS, QSD/P
Associate Project Manager
O (949) 474-1960 | D (714) 642-7510

FUSCOE ENGINEERING, INC.
an employee-owned company
fuscoe.com

full circle thinking®

From: Gary Solsona <GaryS@CannonCorp.us>
Sent: Thursday, March 30, 2023 1:40 PM
To: Sue Williams <SWilliams@fuscoe.com>
Cc: Oriana Slasor <oslasor@fuscoe.com>; Serena Ausili <SAusili@fuscoe.com>; 622-015@fuscoe.tonicdm.com; Jay

Kanani <JayK@CannonCorp.us>; bsarlak@santa-ana.org
Subject: RE: Related Bristol - Hydrologic Soil Type

Hi Sue – based on our review of your email below, we take no exception to your geotechnical engineer's conclusion. For entitlement purposes, please include your geotechnical engineer's email response in your hydrology and WQMP resubmittal. When you pursue the grading application, please include an addendum to the geotechnical report (signed and stamped by your geotechnical engineer) stating the basis of applying soil type C for this project.

If you have any questions, please let me know.

Thanks,
Gary

Gary Essex A. Solsona, PE, QSD
Public Works Manager
Cannon
Direct: 949-777-1580
Mobile: 909-234-7857
GaryS@CannonCorp.us

From: Sue Williams <SWilliams@fuscoe.com>
Sent: Wednesday, March 29, 2023 5:34 PM
To: Gary Solsona <GaryS@CannonCorp.us>
Cc: Oriana Slasor <oslasor@fuscoe.com>; Serena Ausili <SAusili@fuscoe.com>; 622-015@fuscoe.tonicdm.com; Jay Kanani <JayK@CannonCorp.us>
Subject: FW: Related Bristol - Hydrologic Soil Type

WARNING: This email originated from outside of the organization. Do not click links or open attachments unless you recognize the sender and know the content is safe.

Hi Gary,
Thank you for your phone call. We discussed the soil type issue with the Geotech, and he reviewed and provided the link and snapshot of O.C. Public Works Stormwater Program Land Development Tool, which shows that the project is within soil type C. Please see below. Would you please confirm that soil type C is acceptable to be used for this project?
Thank you,
Sue

SUSAN WILLIAMS, PE, MS, QSD/P
Associate Project Manager
O (949) 474-1960 | D (714) 642-7510

FUSCOE ENGINEERING, INC.
an employee-owned company
fuscoe.com

full circle thinking®

From: Michael Givens <michaelg@groupdelta.com>
Sent: Wednesday, March 29, 2023 5:27 PM
To: Sue Williams <SWilliams@fuscoe.com>
Cc: Oriana Slasor <oslasor@fuscoe.com>; Serena Ausili <SAusili@fuscoe.com>; 622-015@fuscoe.tonicdm.com
Subject: RE: Related Bristol - Hydrologic Soil Type

Sue,

The NRSC classifications and hydraulic group descriptions are different than the USCS classification that we use, which makes it difficult to directly identify the difference between hydraulic type C and D soils. The hydraulic soil groups C&D are fairly similar. However, below is a snippet from the OCPW website that classifies the project site as a hydraulic group type C that should be acceptable for the project.

https://ocerws.ocpublicworks.com/service-areas/oc-environmental-resources/oc-watersheds/regional-stormwater-program/water-quality

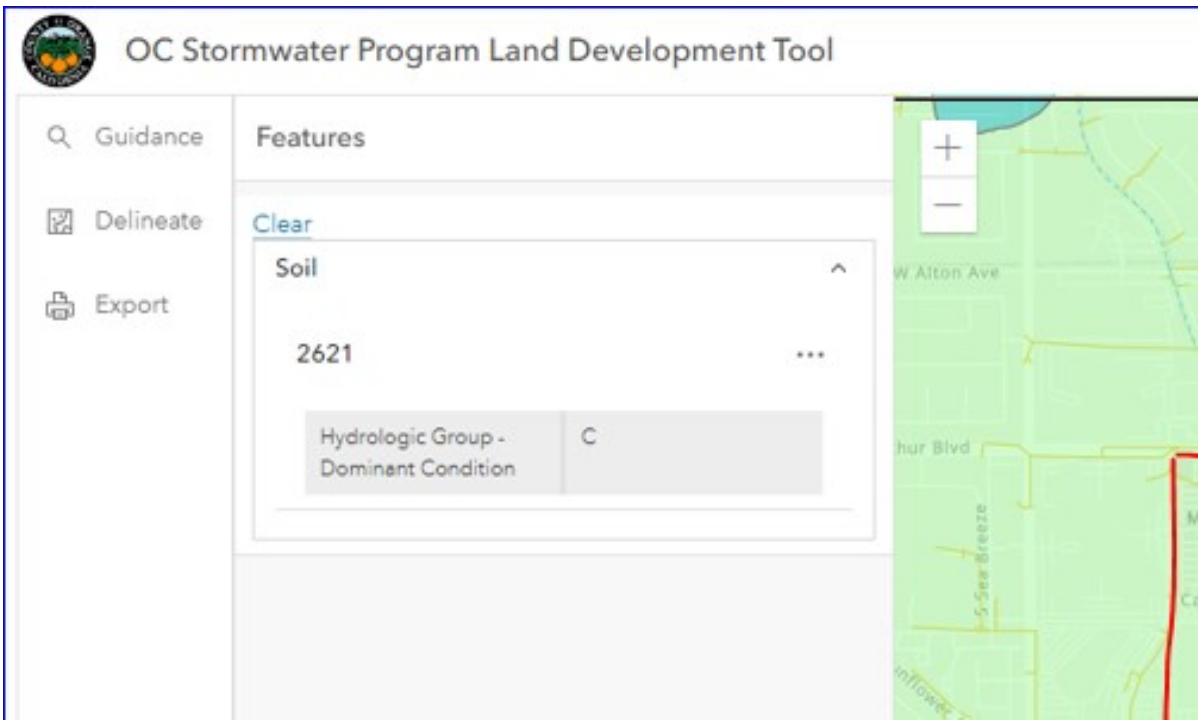

Regards,

Michael Givens, PhD, PE, GE, PG
Group Delta Consultants, Inc.
Associate Engineer / Office Manager
Mobile: (949) 295-2348
michaelg@groupdelta.com

From: Sue Williams <SWilliams@fuscoe.com>
Sent: Wednesday, March 29, 2023 4:39 PM
To: Michael Givens <michaelg@groupdelta.com>
Cc: Oriana Slasor <oslasor@fuscoe.com>; Serena Ausili <SAusili@fuscoe.com>; 622-015@fuscoe.tonicdm.com
Subject: Related Bristol - Hydrologic Soil Type

Your attachments have been security checked by Mimecast Attachment Protection. Files where no threat or malware was detected are attached.

Hi Michael,
It was nice talking to you. As a follow-up to our conversation, we are currently preparing a hydrology study for the project site, and would like your review and concurrence that the hydrologic soil type to be used at the site is soil group "C". As I mentioned, we are using U.S. Department of Agriculture, Natural Resources Conservation Service (NRCS) soil survey to provide the hydrologic soil type. Please see attached soil report, stating that the site is entirely within soil type "C". Here is the link to the NRCS soil survey website: Web Soil Survey (usda.gov)

The city's plan checker is referencing the 1986 O.C. Hydrology Manual soil map and TGD , which show this area as soil type "D". However, they advised that they would defer to you to provide guidance on the soil type that would be acceptable to be used for the hydrologic analysis. Would you please review and provide concurrence, as you deem accurate, that the project site is within soil type "C" as shown on the attached soil survey report?

Please let me know if you have questions or need additional information.

Thank you,
Sue

SUSAN WILLIAMS, PE, MS, QSD/P
Associate Project Manager
SWilliams@fuscoe.com

O (949) 474-1960 | D (714) 642-7510
fuscoe.com
16795 Von Karman, Suite 100
Irvine, California 92606

Heads up! Effective April 3, 2023 our new Irvine office address will be:
15535 Sand Canyon, Suite 100, Irvine, CA 92618

FUSCOE ENGINEERING, INC.
an employee-owned company

full circle thinking®

WARNING: This e-mail and any files transmitted with it are confidential and intended solely for the use of the individual or entity to whom they are addressed. This information is not to be reproduced or forwarded without permission from the sender. If you have received this e-mail in error, please notify the sender or system manager. From time to time, our spam filters eliminate or block legitimate email. If your email contains important attachments or instructions, please ensure that we acknowledge receipt of those attachments or instructions.