Second Addendum to the Final Environmental Impact Report for the Delta Conveyance Project

Prepared for:

California Department of Water Resources

Prepared by:

ICF
980 9th Street, Suite 1200
Sacramento, CA 95814

August 2025

California Department of Water Resources. 2025. *Second Addendum to the Final Environmental Impact Report for the Delta Conveyance Project*.
(ICF 103653.0.003.) Sacramento, CA. Prepared by ICF, Sacramento, CA.

Contents

Chapter 1 Introduction **1-1**

Chapter 2 Background **2-1**

Chapter 3 Description of Project Refinements **3-1**

3.1 Project Refinements 3-1

3.1.1 Refinement 1—Intake Structure Configuration 3-1

3.1.2 Refinement 2—Optimization of Tunnel Profile and Shaft Dimensions 3-6

3.1.3 Refinement 3—Pumping Plant Below-Ground Configuration 3-11

3.1.4 Refinement 4—Surge Basin Slab Configuration 3-14

3.1.5 Refinement 5—Bethany Reservoir Aqueduct Dimensions 3-17

3.2 ITP Amendment Information 3-20

3.2.1 Revision to the ITP Project Description to Remove Preliminary Geotechnical Activities 3-20

3.2.2 Request for Take of Western Burrowing Owl 3-21

Chapter 4 Environmental Analysis **4-1**

4.1 Groundwater (Final EIR Chapter 8) 4-4

4.1.1 Refinements 1, 2, 3, 4, and 5 4-4

4.1.2 Conclusion 4-4

4.2 Aesthetics and Visual Resources (Final EIR Chapter 18) 4-4

4.2.1 Refinement 1—Intake Structure Configuration 4-4

4.2.2 Conclusion 4-5

4.3 Energy (Final EIR Chapter 22) 4-5

4.3.1 Refinement 2—Optimization of Tunnel Profile and Shaft Dimensions 4-5

4.3.2 Conclusion 4-6

4.4 Noise and Vibration (Final EIR Chapter 24) 4-6

4.4.1 Refinement 2—Optimization of Tunnel Profile and Shaft Dimensions 4-6

4.4.2 Conclusion 4-7

Chapter 5 Cumulative Effects **5-1**

Chapter 6 Conclusion/Summary of Findings **6-1**

Chapter 7 References Cited **7-1**

List of Tables

Table 3-1. Comparison of Intake Design Concepts for EPR and Refinement 1 3-3

Table 3-2. Comparison of Shaft Invert Elevations Between Lower Roberts Island and Bethany Reservoir Surge Basin in the EPR and Refinement 2 3-8

Table 3-3. Comparison of Shaft Dimensions Between Intakes and Union Island in the EPR and Refinement 2 3-10

Table 3-4. Estimated Construction Quantities for Surge Basin Slab at the Bethany Complex for EPR and Refinement 4 3-17

Table 4-1. Project Refinements as Analyzed for Specific Resources 4-3

List of Figures

Figure 3-1. Intake Configuration as Described in the EPR 3-4

Figure 3-2. Intake Configuration as Described in Refinement 1 3-5

Figure 3-3. EPR Tunnel Profile Between Intakes and Bethany Reservoir Surge Basin 3-9

Figure 3-4. Refinement 2 Tunnel Profile Between Intakes and Bethany Reservoir Surge Basin 3-9

Figure 3-5. Comparison of the Bethany Reservoir Pumping Plant Schematics for EPR and Refinement 3 3-13

Figure 3-6. Comparison of Surge Basin Slab Configuration at the Bethany Complex for EPR and Refinement 4 3-16

Figure 3-7. Bethany Reservoir Aqueduct Configuration in the EPR 3-19

Figure 3-8. Bethany Reservoir Aqueduct Configuration in Refinement 5 3-19

Acronyms, Initialisms, and Abbreviations

Addendum 1	*Addendum to the Final Environmental Impact Report for the Delta Conveyance Project*
Addendum 2	*Second Addendum to the Final Environmental Impact Report for the Delta Conveyance Project*
CDFW	California Department of Fish and Wildlife
CEQA	California Environmental Quality Act
CESA	California Endangered Species Act
CLSM	controlled low-strength material
DCA	Delta Conveyance Design and Construction Authority
DWR	California Department of Water Resources
EBMUD	East Bay Municipal Utility District
EPR	Engineering Project Report
Final EIR	*Delta Conveyance Project Final Environmental Impact Report*
ITP	Incidental Take Permit
L_{dn}	day-night sound level
L_{eq}	equivalent sound level
MARP	Mokelumne Aqueducts Resiliency Project
MMRP	Mitigation Monitoring and Reporting Program
Monitoring Plan	*2024–2026 Preconstruction Field Investigations Environmental Compliance, Clearance, and Monitoring Plan*
NOP	Notice of Preparation
project	Delta Conveyance Project
RTM	reusable tunnel material

Chapter 1
Introduction

The California Department of Water Resources (DWR), the lead agency under the California Environmental Quality Act (CEQA) for the Delta Conveyance Project (project), certified the *Delta Conveyance Project Final Environmental Impact Report* (Final EIR), executed a Notice of Determination documenting project approval, adopted project Findings of Fact and a Statement of Overriding Considerations,[1] and adopted a Mitigation Monitoring and Reporting Program (MMRP) on December 21, 2023 (California Department of Water Resources 2023b, 2023c). In February 2025, DWR approved the first *Addendum to the Final Environmental Impact Report for the Delta Conveyance Project* (Addendum 1) (California Department of Water Resources 2025). Addendum 1 was prepared to evaluate project operations refinements and other project refinements, including refinements identified through the California Endangered Species Act (CESA) consultation process for the Incidental Take Permit (ITP), which was issued by California Department of Fish and Wildlife (CDFW) in February 2025.

Changes that are within the scope of a previously approved project do not require preparation of a subsequent or supplemental EIR. (See *Concerned Dublin Citizens v. City of Dublin* (2013) 214 Cal.App.4th 1301, 1318.) Because CEQA directs lead agencies to prepare EIRs as early as feasible in the planning process (CEQA Guidelines, § 15004(b)), courts have recognized that CEQA leaves technical "details to engineers" and that project "design may change many times without requiring further environmental review." (*Ocean View Ests. Homeowners Assn., Inc. v. Montecito Water Dist.* (2004) 116 Cal.App.4th 396, 400–401.) Here, DWR has prepared this addendum, *Second Addendum to the Final Environmental Impact Report for the Delta Conveyance Project* (Addendum 2), to describe minor engineering refinements and additional information relating to the ITP, as discussed further in Chapter 2, *Background*.

As described in Section 15164(a) of the CEQA Guidelines: "The lead agency or responsible agency shall prepare an addendum to a previously certified EIR if some changes or additions are necessary but none of the conditions described in Section 15162 calling for preparation of a subsequent EIR have occurred." The conditions in Section 15162 are:

(1) Substantial changes are proposed in the project which will require major revisions of the previous EIR or negative declaration due to the involvement of new significant environmental effects or a substantial increase in the severity of previously identified significant effects;

(2) Substantial changes occur with respect to the circumstances under which the project is undertaken which will require major revisions of the previous EIR or Negative Declaration due to the involvement of new significant environmental effects or a substantial increase in the severity of previously identified significant effects; or

(3) New information of substantial importance, which was not known and could not have been known with the exercise of reasonable diligence at the time the previous EIR was

[1] *Errata to the CEQA Findings of Fact for the Delta Conveyance Project* (California Department of Water Resources 2024a).

> certified as complete or the Negative Declaration was adopted, shows any of the following:
>
> (A) The project will have one or more significant effects not discussed in the previous EIR or negative declaration;
>
> (B) Significant effects previously examined will be substantially more severe than shown in the previous EIR;
>
> (C) Mitigation measures or alternatives previously found not to be feasible would in fact be feasible and would substantially reduce one or more significant effects of the project, but the project proponents decline to adopt the mitigation measure or alternative; or
>
> (D) Mitigation measures or alternatives which are considerably different from those analyzed in the previous EIR would substantially reduce one or more significant effects on the environment, but the project proponents decline to adopt the mitigation measure or alternative.

Likewise, California Public Resources Code Section 21166 states that unless one or more of the following events occur, no subsequent or supplemental environmental impact report shall be required by the lead agency or by any responsible agency:

- Substantial changes are proposed in the project which will require major revisions of the environmental impact report;
- Substantial changes occur with respect to the circumstances under which the project is being undertaken which will require major revisions in the environmental impact report; or
- New information, which was not known and could not have been known at the time the environmental impact report was certified as complete, becomes available.

As discussed in more detail in this Addendum, the project refinements discussed in Chapter 3, *Description of Project Refinements*, will not trigger any of the requirements for a subsequent EIR. Because all the effects associated with the project refinements are within the envelope of impacts addressed in the Final EIR[2] and do not constitute a new significant environmental impact or a substantial increase in the severity of a previously identified significant impact, an addendum is the appropriate form in which to disclose these changes and their associated effects.

In addition, no new information of substantial importance has become available that would trigger the requirements for a subsequent EIR. As previously stated, the project with the project refinements would not have significant impacts not discussed in the Final EIR nor have mitigation measures or alternatives previously found to be infeasible that would substantially reduce significant impacts been found to be feasible.

[2] All references to Final EIR chapters and appendices in this Addendum refer to Volume 1 of the Final EIR.

Chapter 2
Background

The Delta Conveyance Design and Construction Authority (DCA) completed Engineering Project Reports (EPRs) that present conceptual engineering information for the proposed central and eastern alignments and the proposed Bethany Reservoir alternative (Delta Conveyance Design and Construction Authority 2022a, 2022b). On December 21, 2023, based on an extensive environmental review, as documented in the Final EIR for the project (California Department of Water Resources 2023a), DWR certified the Final EIR and approved the Bethany Reservoir Alignment.

After project approval, DWR directed DCA to further evaluate several project features described in the *Delta Conveyance Final Draft Engineering Project Report—Bethany Reservoir Alternative* (Delta Conveyance Design and Construction Authority 2022b) and the *Delta Conveyance Final Draft Engineering Project Report Update—Bethany Reservoir Alternative* (Delta Conveyance Design and Construction Authority 2023) and consider potential design or construction refinements to improve constructability. This evaluation resulted in a set of project refinements that at an early conceptual stage of the project were considered by DCA to be reasonable and credible based on industry experience. Following an early conceptual stage evaluation, the refinement concepts that were determined to be of potential value were further developed to a level of detail similar to the concepts described in the EPRs. The project refinements discussed and evaluated in this Addendum were a result of this additional design development effort.

On February 14, 2025, CDFW issued ITP No. 2081-2024-018-00 to DWR for the construction and operation of the project (California Department of Fish and Wildlife 2025), authorizing take of California tiger salamander (*Ambystoma californiense*), giant garter snake (*Thamnophis gigas*), Swainson's hawk (*Buteo swainsoni*), tricolored blackbird (*Agelaius tricolor*), Crotch bumble bee (*Bombus crotchii)*, Mason's lilaeopsis (*Lilaeopsis masonii*), delta smelt (*Hypomesus transpacificus*), longfin smelt (*Spirinchus thaleichthys*), winter-run Chinook salmon (*Oncorhynchus tshawytscha*), spring-run Chinook salmon (*Oncorhynchus tshawytscha*), and white sturgeon (*Acipenser transmontanus*) (collectively, the Covered Species) associated with, and incidental to, the construction and operation of the project. Covered Activities include preconstruction activities, the construction and maintenance of new facilities and, once those facilities become operational, up to 2 years of operations and maintenance.

DWR will file an ITP amendment application to request:

1. Amending the ITP to provide clarifications relative to the minor engineering refinements discussed in Chapter 3, *Description of Project Refinements*, in this Addendum.
2. Amending Section IV, *Project Description*, Section 21, *The Following Components Are Not Included as Covered Activities*, to clarify that a subset of preliminary geotechnical activities through December 31, 2029 are not Covered Activities under the ITP.
3. Including the western burrowing owl (*Athene cunicularia* ssp. *hypugaea*), a CESA Candidate Species, as a Covered Species.

The Final EIR for the project included an analysis of western burrowing owl as a Species of Special Concern, and Addendum 1 included a discussion of the change in listing status for the western

burrowing owl from Species of Special Concern to Candidate Species after it was petitioned for listing as threatened.

Amending the ITP, as described above, would not result in new impacts or changes to impacts as discussed in the Final EIR.

This Addendum analyzes the environmental impacts of the project refinements and discusses the above-described additional information relating to the ITP. Where applicable, this Addendum describes how these refinements do not, among other things, create new significant environmental impacts or a substantial increase in the severity of a previously identified significant impact disclosed and analyzed in the Final EIR, consistent with CEQA Guidelines Sections 15162 and 15164.

The following terminology is used throughout this Addendum.

- *Construction footprint* refers to the surficial and subsurface areas within the project's construction boundary as defined in the Final EIR that involves the physical construction activities during construction of the project.
- *Preliminary geotechnical activities* refers to a subset of the geotechnical activities, described in ITP Section IV, *Project Description*, Section 1, *Preconstruction Activities with Temporary Impacts*, and Subsection 1.1, *Investigations to Support Section 408 Permitting - Soil Boring and Cone Penetration Tests*, and defined in the Final EIR, Chapter 3, *Description of the Proposed Project and Alternatives*, Section 3.15, *Field Investigations*, Section 3.15.1, *Investigations to Support Section 408 Permitting*, and Section 3.15.1.1, *Soil Borings and Cone Penetration Tests*, that is comprised of land-based soil borings and cone penetration tests, that will be conducted between 2025 and 2029[3] during the preliminary planning phase to support the design of project facilities (up to 30% design).
- *Project refinements* refers to the five proposed refinements of the project identified by DWR through the project design process that would result in minor engineering refinements or modifications to some of the project facilities evaluated in the Final EIR.

[3] Following the approval of the *2024–2026 Preconstruction Field Investigations Environmental Compliance, Clearance, and Monitoring Plan* (Monitoring Plan), the schedule of the preliminary geotechnical activities was delayed to 2025–2029. The Monitoring Plan applies to the preliminary geotechnical activities.

Chapter 3
Description of Project Refinements

As described in Chapter 2 of this Addendum, project refinements have been identified through the project design process. All project refinements considered in this Addendum are summarized in this chapter and based on the detailed information from the *Project Refinements Report* (Delta Conveyance Design and Construction Authority 2025). Project refinements that have the potential to result in changes to EIR impacts are described in Section 3.1, *Project Refinements*. The project refinements discussed in this Addendum would result in minor engineering modifications to some project facilities described in the Final EIR and the EPRs (Delta Conveyance Design and Construction Authority 2022a, 2022b, 2023). None of the project refinements would result in changes to project operational criteria.

Additionally, DWR will be filing an ITP amendment application to address the information outlined in Chapter 2. Information related to the ITP amendment application is described in Section 3.2, *ITP Amendment Information*. This additional information related to the ITP amendment application does not create the conditions described in Section 15162 of the CEQA Guidelines that require preparation of a subsequent EIR.

3.1 Project Refinements

The project refinements described in this section would result in minor engineering modifications to some project facilities as they were described in the Final EIR and EPR. These refinements are analyzed in Chapter 4, *Environmental Analysis,* because they were determined to have the potential to result in a change to the physical environment. However, as discussed for each resource analyzed in Chapter 4, when compared to the impact analyses contained in the Final EIR, none of the changes to the anticipated physical impacts of the project resulting from these project refinements meet any of the conditions described in Sections 15162 of the CEQA Guidelines requiring preparation of a subsequent EIR.

3.1.1 Refinement 1—Intake Structure Configuration

3.1.1.1 Purpose

Refinement 1 would modify the configuration of the intake structural design and construction methods of the project intakes (Intakes B and C) to minimize construction activities, improve access, and increase on-site safety measures for operations and maintenance workers.

3.1.1.2 Summary of Refinement

Refinement 1 includes modifications to the north Delta intakes (Intakes B and C)[4] located on the Sacramento River and the connecting pipes between the intake structures and the sedimentation basins, as shown on Figures 3-1 and 3-2.

[4] An overview of these features is provided in Final EIR, Chapter 3, *Description of the Proposed Project and Alternatives*, Section 3.4.1. *North Delta Intakes* (California Department of Water Resources 2023a:3-20).

Key features of Refinement 1 include:

- Reduced number of discharge pipes connecting the intake structure to the sedimentation basin.
- Addition of two internal stairways.
- Widening of the two end bays on either side of the intake structure.
- Addition of four intake access structures above the stairways that would extend 13 feet above the top of the intake structure.
- Revision to cofferdam back wall.
- Reduced number of foundation-drilled piers.
- Refined extents of ground improvement beneath the intake structures.
- Overall reduction in the amount of materials required for portions of the intake structure.

Refinement 1 would not change:

- Intake surficial construction footprint.
- The 40-foot-tall gantry crane on the top of the intake structure.
- Operational performance of individual fish screens.
- Hardscape area at the intakes.,

The Final EIR and EPR conceptual designs of the intake configuration were based on geotechnical information available during preparation of the EPR. The EPR conceptual design was based on conservative foundation concepts because of limited geotechnical information. Following completion of the Final EIR and EPR, the results of geotechnical investigations conducted from late 2021 through May 2024 were reviewed to determine whether conceptual design could be modified to reduce materials required for structural foundations. In addition, the design of the intakes was modified to improve constructability and increase on-site safety measures for operations and maintenance workers.

Refinement 1 would reduce the number of discharge pipes connecting the intake structure to the sedimentation basin to improve the efficiency of constructing the discharge pipes. The EPR intake structure configuration included thirty 60-inch-diameter discharge pipes, each connected to one intake tee screen, to convey water from the intake structure to the sedimentation basin. Refinement 1 would combine each pair of 60-inch-diameter pipelines within the intake structure into a single 84-inch-diameter pipeline (halving the number of discharge pipes) for a total of fifteen 84-inch-diameter pipelines that would convey water from the intake structure to the sedimentation basin.

Each end bay of the EPR concept design intake structure included an access hatch on top of the intake structure with a vertical stairway for periodic operational access. Refinement 1 would include widening of the two end bays on either side of the intake structure to improve function of the space for access, material handling, and storage. Refinement 1 would include two additional internal stairways to comply with the requirements of the California Building Code for structure access and egress and four access structures that would extend 13 feet above the top deck of the intake structure (dimensions for each access structure would be 13 feet high by 22.3 feet long by 5.3 feet wide).

Following the EPR, additional geotechnical information was obtained, and additional criteria were developed, which led to design concept modifications to reduce concrete quantities, ground improvement materials, drilled piers, and construction complexity; and to improve hydraulic function and access for workers to reduce safety risks. Refinement 1 would change the width, elevation, and construction method of the cofferdam back wall from a 5-foot-wide wall (deep mechanically mixed) to a 3-foot-wide diaphragm wall and extend the depth of the wall from elevation -100 feet to elevation -130 feet to improve constructability and performance. With Refinement 1 the number of foundation-drilled piers would be reduced and the extent of ground improvement beneath each intake structure would be reduced.

Changes of the intake structure between the EPR and Refinement 1 are summarized in Table 3-1 and shown on Figures 3-1 and 3-2.

Table 3-1. Comparison of Intake Design Concepts for EPR and Refinement 1

Item	EPR	Refinement 1
Discharge pipes from intake structure to sedimentation basin	• Thirty 60-inch-diameter pipes	• Fifteen 84-inch-diameter pipes
Gate box structure	• 30 structures	• None
Slide gates	• Sixty 60-inch slide gates (two per gate box)	• Thirty 60-inch slide gates (one per tee screen and flow meter) • Fifteen 84-inch slide gates (one per discharge pipe)
Set-in intake vault pipe	• Thirty 39-foot-long pipes	• Thirty 29-foot-long pipes
Cofferdam backwall foundation and structural design method	• 5-foot-thick walls (deep mechanically mixed) with tie-back anchors—132,124 square feet • Tip elevation -100 feet	• 3-foot-thick double wall with tie-back anchors—161,000 square feet • Tip elevation -130 feet
42-inch diameter drilled piers	• 1,215 piers (92,340 feet total) • 80 feet deep	• 666 piers (46,620 feet total) • 70 feet deep
Ground improvement	• 102,600 cubic yards of grout placed by jet grouting	• 79,721 cubic yards of grout placed by jet grouting
Reinforced concrete for gate box dividing walls, thrust blocks and wider end bays	• N/A	• 5,293 cubic yards
Stairwells	• 2—one at each end bay	• 2—one at each end bay • 2—internal stairways so that emergency access is equal to or less than every 300 feet
Access to stairwells from top of intake (on outside)	• 2—access hatches at the same elevation as the top of the intake structure	• 4—stairway access structures ○ 13 feet high x 22.3 feet long x 5.3 feet wide • To be constructed above top of the intake structure • Height of these structures would be lower than the 40-foot-tall gantry crane

Sources: California Department of Water Resources 2023a; Delta Conveyance Design and Construction Authority 2022a, 2022b.
N/A = not applicable.

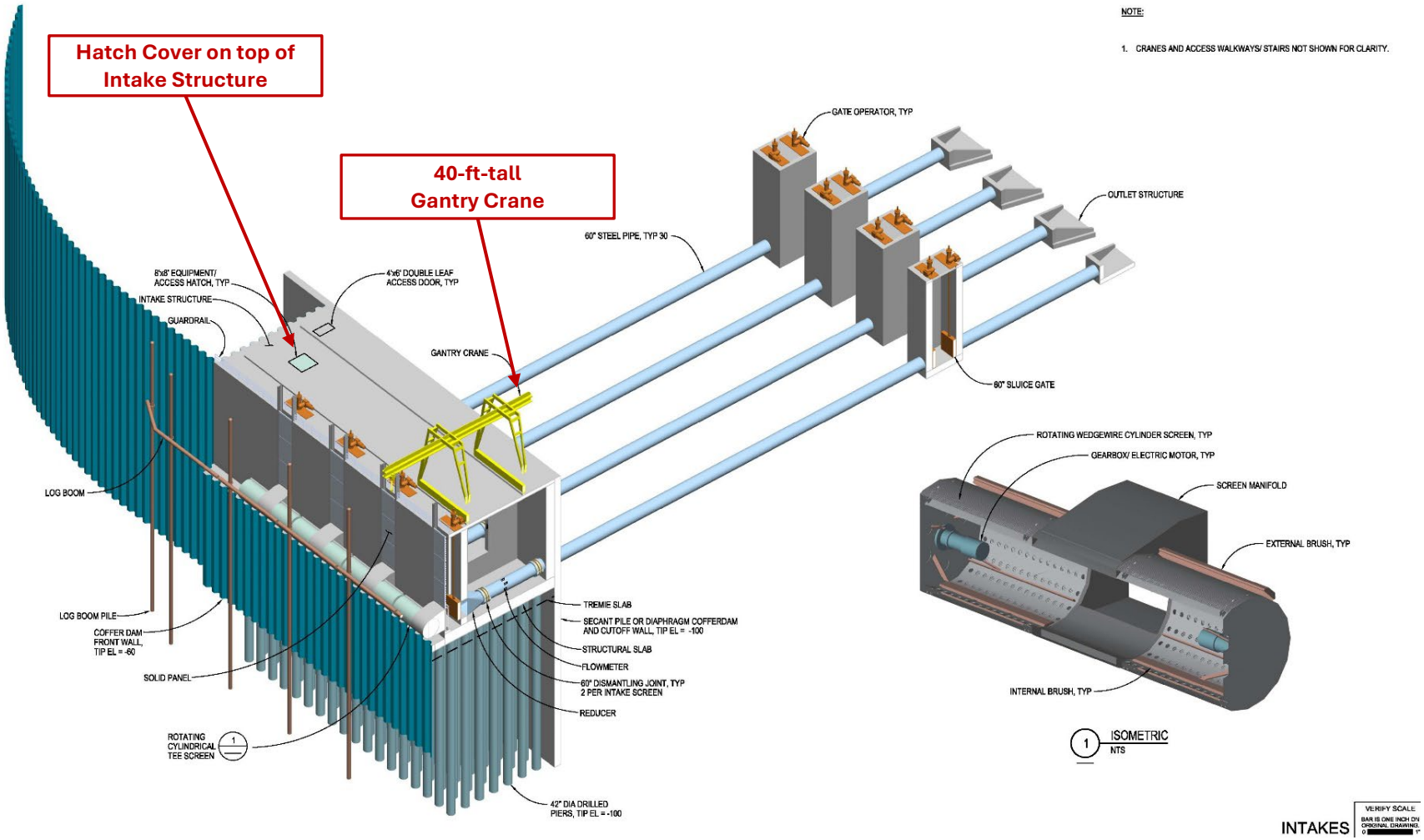

Figure 3-1. Intake Configuration as Described in the EPR

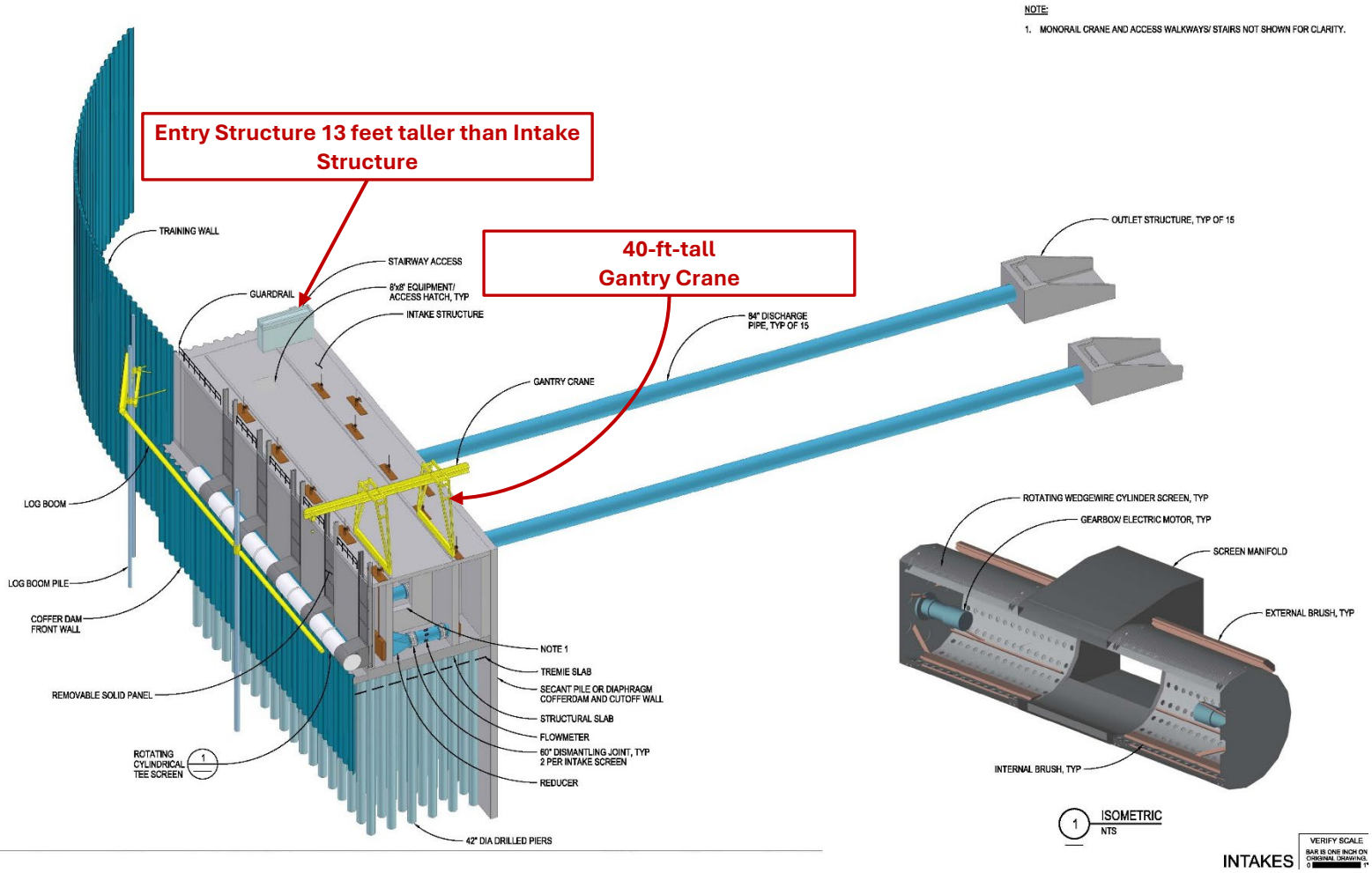

Figure 3-2. Intake Configuration as Described in Refinement 1

Refinement 1 would not change the surficial construction footprint of the intakes or the 40-foot-tall gantry crane on the top of the intake structure. The area of hardscape at the intakes would be the same; therefore, there would be no change in runoff volume from the intake sites. Operational performance of individual fish screens would not change because the number of pipes between the tee fish screens and the intake control gates would not change.

3.1.2 Refinement 2—Optimization of Tunnel Profile and Shaft Dimensions

3.1.2.1 Purposes

Refinement 2 would achieve two purposes: (1) lower the tunnel profile from the Lower Roberts Island tunnel launch shaft to the Bethany Reservoir Surge Basin to avoid a future conflict with the East Bay Municipal Utility District's (EBMUD) proposed Mokelumne Aqueducts Resiliency Project (MARP), and (2) reduce the thickness of the diaphragm walls, shaft liners, shaft slab thickness, and diameters of the intake outlet shafts and maintenance and receptions shafts, which would result in less soil excavation and less concrete poured at these shaft locations.

3.1.2.2 Summary of Refinement

Refinement 2 would comprise two separate sub-refinements that optimize the tunnel profile and shaft dimensions.[5] The first sub-refinement would lower the project's tunnel profile from the Lower Roberts Island tunnel launch shaft to the Bethany Reservoir Surge Basin to avoid future conflicts with the proposed MARP, as shown on Figures 3-3 and 3-4. The second sub-refinement would involve reducing the thickness of the diaphragm walls, shaft liners, and invert shaft slab thickness, and reducing the diameters of the intake outlet shafts and maintenance and receptions shafts. Neither of these sub-refinements would change the surficial footprint of the tunnel shaft sites described in the EPR and in the Final EIR.

Key features of Refinement 2 include:

- Increased tunnel shaft depth at Upper Jones Tract, Union Island, and the Bethany Reservoir Surge Basin.
- Decreased tunnel shaft diameter at the intakes and reception and maintenance shafts (not including the Bethany Reservoir Surge Basin).
- Reduced excavation volume for tunnel shafts due to reduced tunnel shaft diameters and/or reduced invert tunnel slabs.
- Increased excavation volume due to deeper tunnel shafts between Lower Roberts Island and Bethany Reservoir Surge Basin.

[5] Construction and permanent footprints for the Bethany Alignment shaft sites are described in Appendix 3D, *Intakes, Roads, and Shafts Summary Tables*, Table 3D-7 (California Department of Water Resources 2023a:3D-19). An overview of intake and shaft features is provided in Final EIR, Chapter 3, Section 3.14, *Alternative 5—Bethany Reservoir Alignment, 6,000 cfs, Intakes B and C (Proposed Project)*, Table 3-13 (California Department of Water Resources 2023a:3-117).

- Overall reduction in excavation volume from 489,000 cubic yards to 436,750 cubic yards because the reduction of excavated soil at the tunnel shafts would be greater than the increased excavation volume of the deeper shafts.
- Reduced duration of 24-hour tremie concrete pours at the intakes and reception and maintenance shafts.

Refinement 2 would not change:

- Tunnel shaft surficial construction footprint.
- Tunnel length.
- Reusable tunnel material (RTM) volume at the tunnel launch shaft sites.
- Operational performance of the tunnel.
- Groundwater dewatering flows at the tunnel shafts.
- Hardscape area at the tunnel shafts.

Lower Tunnel Profile from Lower Roberts Island to Bethany Reservoir Surge Basin

The first sub-refinement is lowering the project's tunnel profile from the Lower Roberts Island tunnel launch shaft to the surge basin to avoid future conflicts with the proposed MARP.

As described in the EPR, the tunnel profile between Lower Roberts Island and the surge basin at the Bethany Reservoir Pumping Plant was designed to be located below the lowest zone of liquefaction and to be at least 75 feet below the bottom of the San Joaquin River and the bottom of the Stockton Deep Water Ship Channel.

The tunnel conceptual design described in the Final EIR and EPR crossed under the existing Mokelumne Aqueducts between the Lower Roberts Island tunnel launch shaft site and the Upper Jones Tract Maintenance Shaft (Mapbook 3-3 [California Department of Water Resources 2023a]). At this crossing, the Mokelumne Aqueducts would be installed above the ground surface and sit on pipe saddles that are supported on piles. The piles at the tunnel crossings had tip elevations of approximately -38 feet. EBMUD's future 15-foot-diameter MARP tunnel being considered would be constructed with an invert (bottom) elevation of -126 feet. The EPR did not include design concepts for crossing the future MARP because the MARP was not included in the Final EIR as a cumulative project, as the Notice of Preparation (NOP) for the MARP project was released on March 28, 2022—after the January 15, 2020, release date of the Delta Conveyance Project NOP. At this time, this reasonably foreseeable probable future project (MARP) has been in the planning stage since 2022 and is anticipated to be further defined in the coming years. EBMUD submitted to DWR comments on the Draft EIR describing the potential MARP location. However, because the MARP was not included in the Final EIR cumulative projects, no changes were included in the Final EIR.

Following completion of the EPR and Final EIR, several evaluations were considered based on available geotechnical information and standard engineering practices. The results of those preliminary evaluations indicated that there should be 20 feet between the invert of the MARP tunnel and the top of the project tunnel at the crossing. To provide this minimum separation, Refinement 2 would lower the project tunnel profile between Lower Roberts Island and the Bethany Reservoir Surge Basin to avoid conflicts with the proposed MARP based on available information. The tunnel slope would be steeper from Lower Roberts Island to just past the MARP crossing and

then become flat from that location to the surge basin. The lowered project tunnel profile would still be located below the lowest zone of liquefaction and at least 75 feet below the bottom of the San Joaquin River and the bottom of the Stockton Deep Water Ship Channel. The shaft inverts would be lowered as described in Table 3-2 and shown on Figures 3-3 and 3-4.

Table 3-2. Comparison of Shaft Invert Elevations Between Lower Roberts Island and Bethany Reservoir Surge Basin in the EPR and Refinement 2

Tunnel Shaft	EPR Shaft Invert Elevation (feet)	Refinement 2 Shaft Invert Elevation (feet)
Lower Roberts Island	-156.49	-156.49
Upper Jones Tract	-151.19	-183.5
Union Island	-161.43	-183.5
Surge Basin	-164.18	-183.5

Sources: Delta Conveyance Design and Construction Authority 2022a, 2022b.

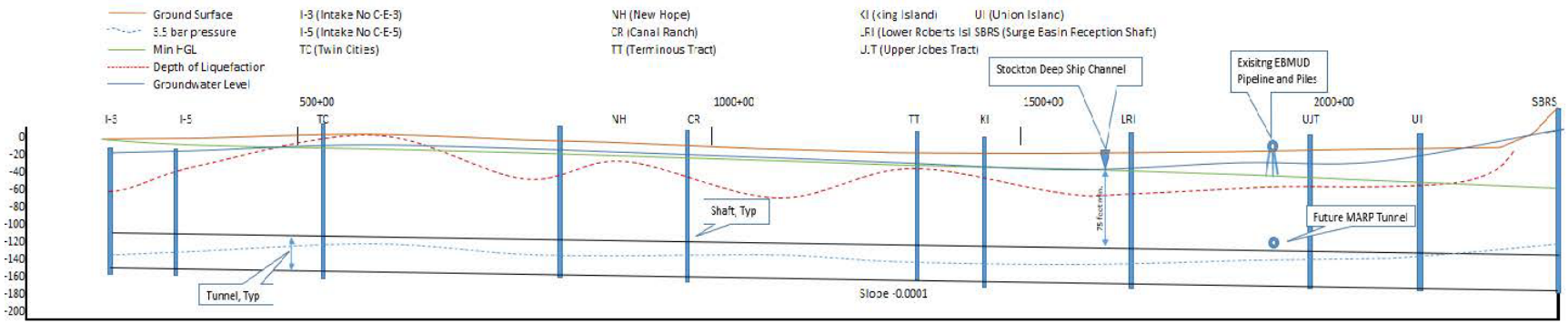

Figure 3-3. EPR Tunnel Profile Between Intakes and Bethany Reservoir Surge Basin

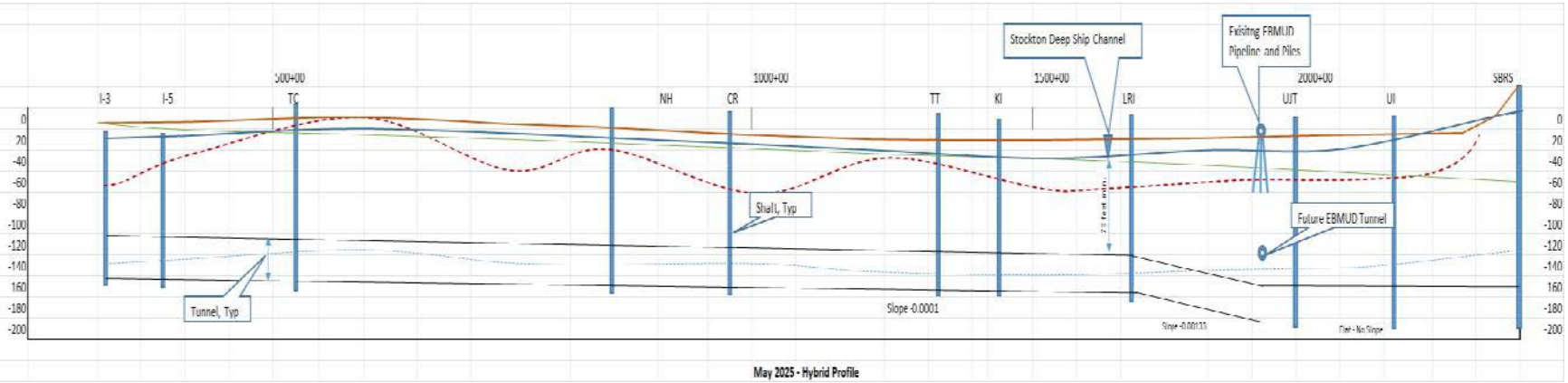

Figure 3-4. Refinement 2 Tunnel Profile Between Intakes and Bethany Reservoir Surge Basin

Reduce Diameter of Reception and Maintenance Shafts

The second sub-refinement involves reducing the thickness of the diaphragm walls, shaft liners, and invert shaft slab thickness, and reducing the diameters of the intake outlet shafts and maintenance and receptions shafts.

Table 3-3 shows the shaft internal diameters, diaphragm wall thickness, lining thickness, and invert slab thickness included in the EPR design concept. As the conceptual design proceeded, additional geotechnical information, including considerations for potential liquefaction, was reviewed and used to identify design concepts to reduce the size of tunnel shaft diameter excavation and the depth of the tunnel invert slab thickness; these Refinement 2 reductions are shown in Table 3-3. The steel reinforcement requirements for the shafts were updated and the conceptual design assumed independent structures that do not engage in load sharing. No changes would occur at the tunnel launch shafts at Twin Cities Complex and Lower Roberts Island because the diameter and the invert slab thickness of the launch shaft sites would be designed to accommodate tunnel boring machine operations. The invert slab thickness at the Bethany Reservoir Surge Basin would not be modified from the EPR design concept because of the need to integrate the surge basin with the Bethany Reservoir Pumping Plant.

Table 3-3. Comparison of Shaft Dimensions Between Intakes and Union Island in the EPR and Refinement 2

Tunnel Shaft	EPR Internal Diameter (feet)	Refinement 2 Internal Diameter (feet)	EPR Wall Thickness (feet)	Refinement 2 Wall Thickness (feet)	EPR Slab Depth (feet)	Refinement 2 Slab Depth (feet)
Intake B	80	70	8	6.5	30	20
Intake C	80	70	8	6.5	30	20
Twin Cities Complex	115	115	8	8	30	30
New Hope Tract	70	66	8	6.5	30	20
Canal Ranch Tract	70	66	8	6.5	30	20
Terminous Tract	70	66	8	6.5	30	20
King Island	70	66	8	6.5	30	20
Lower Roberts Island	115	115	8	8	30	30
Upper Jones Tract	70	66	8	6.5	30	20
Union Island	70	66	8	6.5	30	20

Sources: California Department of Water Resources 2023a; Delta Conveyance Design and Construction Authority 2022a, 2022b.

The reduced size of reception and maintenance shafts would result in reduced excavation volume for tunnel shafts (including intakes) in Sacramento County due to the reduced tunnel shaft internal diameter and reduced invert tunnel slabs from 179,400 cubic yards to 155,600 cubic yards. The reduced invert slab thickness would reduce the duration of 24-hour tremie concrete pours at the intakes and reception and maintenance shafts.

Refinement 2 would not change the surficial construction footprint of the tunnel shaft or the tunnel length. The area of hardscape at the tunnel shafts would be the same; therefore, there would be no change in runoff volume from the tunnel shaft sites. RTM volume at the tunnel launch shaft sites would also be the same. Operational performance of the tunnel would not change because the

hydraulic grade line is above the crown of the tunnel and would not be modified by the tunnel profile and the tunnel shaft depths, diameters, or invert slab depths. Groundwater dewatering flows at the tunnel shafts would not change with Refinement 2 because the shaft diaphragm walls and the invert slabs would be constructed prior to removal of groundwater in the shaft as described in the EPR. The diaphragm walls would isolate the shaft from the groundwater.

3.1.3 Refinement 3—Pumping Plant Below-Ground Configuration

3.1.3.1 Purpose

Refinement 3 would reconfigure the foundation and below-ground structural layout at the Bethany Reservoir Pumping Plant to allow construction from the bottom up rather than from the top story down, which would improve constructability at the pumping plant, reduce excavation soils and concrete quantities at the Bethany Complex batch plant, and reduce safety risks for construction workers.

3.1.3.2 Summary of Refinement

Refinement 3 includes modifications to the below-ground configuration of the Bethany Reservoir Pumping Plant, as shown on Figure 3-5.

Key features of Refinement 3 include:

- Improved construction worker safety because construction would occur from the bottom of the excavation to the ground surface.
- Reduced excavation volume in Alameda County.
- Reduced concrete volume.

Refinement 3 would not change:

- Pumping plant surficial construction footprint.
- Structures above the ground surface, as shown on Figure 3-5.
- Operational performance of the tunnel and pumping plant.
- Hardscape area at the pumping plant.

The foundation and layout of the Bethany Reservoir Pumping Plant described in Final EIR Chapter 3, Section 3.14.1.1, *Bethany Reservoir Pumping Plant* (California Department of Water Resources 2023a:3-121), and the EPR was based on limited geotechnical information and configured to locate structures near other structures that have functional dependencies. The site layout accounted for operations and maintenance access and setbacks required by codes, with the goal of limiting the facility's permanent areas of impact. In the Final EIR and EPR design concept, water from the tunnel was conveyed from the Bethany Reservoir Surge Basin through a wet well inlet to the pumping plant wet well inlet. The pumping plant was a five-story structure completely constructed below ground. The EPR assumed that the groundwater existed in an aquifer with high artesian conditions that could affect the stability of the excavation. Therefore, the structure was developed to be constructed "upside down," from the top story just below ground level down to the bottom of the pumping plant

for each story to have adequate structural support. After construction of the first story near the ground surface, remaining excavations and wall and floor construction would need to occur under the first floor, similar to mining construction methods. Diaphragm walls would be installed around the pumping plant walls and throughout the interior of the structure. This type of structure is called a "vertical deep-box diaphragm wall arrangement."

Following completion of the EPR, results from previous geotechnical investigations became available and indicated that the potential for artesian conditions was less than was assumed during preparation of the EPR. Therefore, in Refinement 3, the wet well would be replaced with a tunnel that would be constructed in an open-face excavation manner with a tunneling shield or using a sequential excavation method. The vertical deep-box diaphragm wall arrangement would be replaced with two underground structures using interlinking circular shaft structures on either side of the tunnel. This type of structure would have a different type of foundation that would be constructed following initial excavation from the bottom of the pumping plant up to the ground surface. This method would be more efficient and safer for construction workers and would reduce excavation soils from 2,797,000 cubic yards to 2,237,600 cubic yards, concrete quantities from 304,300 cubic yards to 243,400 cubic yards, and construction complexity.

Figure 3-5 presents a comparison of the pumping plant schematic for the design concepts under the EPR and Refinement 3.

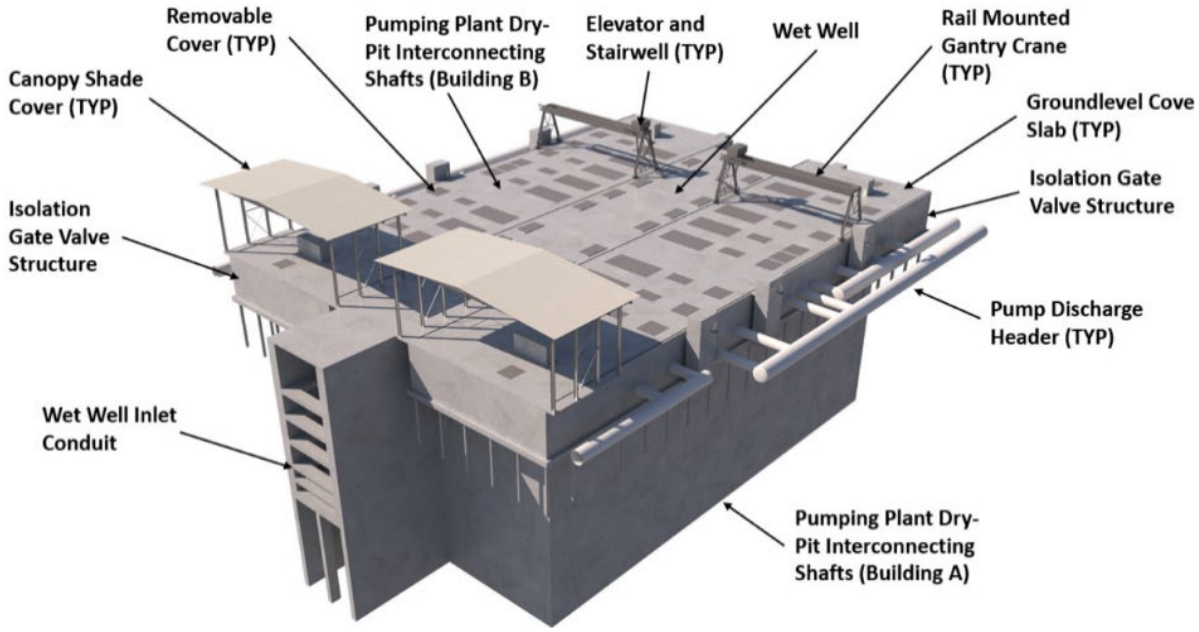

EPR Configuration of Bethany Reservoir Pumping Plant

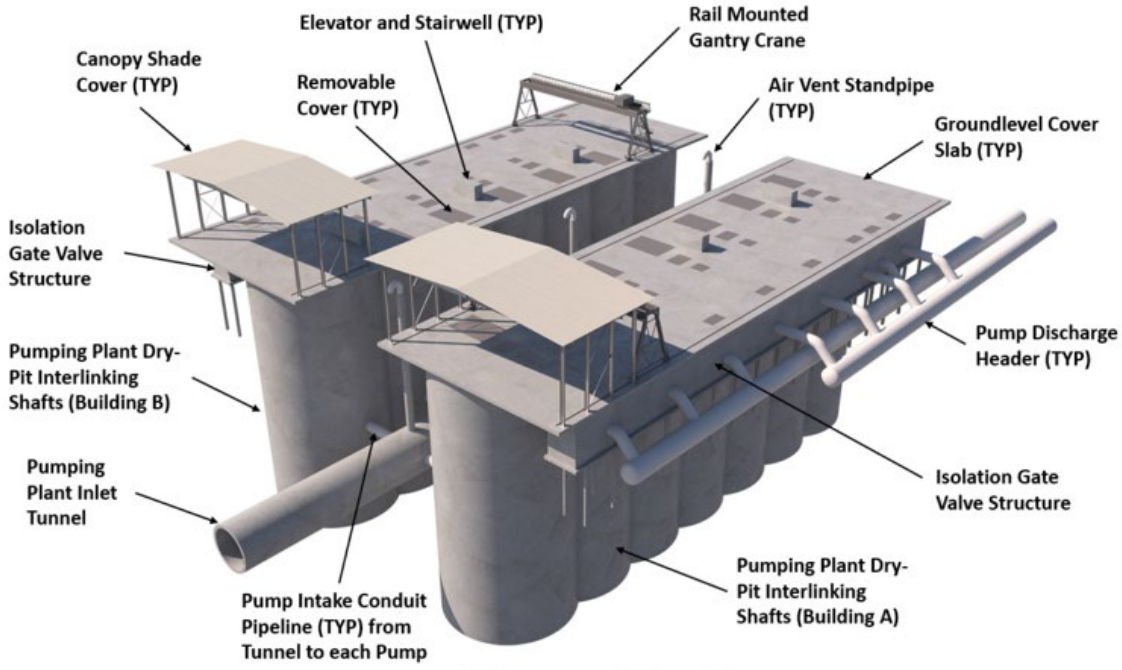

Refinement 3 Configuration of Bethany Reservoir Pumping Plant
(Area between two halves of pumping plant would be covered and similar to EPR design)

Figure 3-5. Comparison of the Bethany Reservoir Pumping Plant Schematics for EPR and Refinement 3

Refinement 3 would not change the surficial construction footprint of the Bethany Reservoir Pumping Plant or its aboveground structures. The area of hardscape at the pumping plant would be the same; therefore, there would be no change in runoff volume from the pumping plant site. The operational performance of the tunnel and pumping plant would not change because the hydraulic grade line would not be modified by the below-ground structural configuration of the pumping plant or its method of construction.

3.1.4 Refinement 4—Surge Basin Slab Configuration

3.1.4.1 Purpose

Refinement 4 modifies the foundation design for the Bethany Reservoir Surge Basin slab at the Bethany Complex, which improves constructability at the Bethany Reservoir Pumping Plant and reduces excavation soil volumes, concrete volumes, and the amount of steel placed in the concrete as compared to the design in the Final EIR and EPR.

3.1.4.2 Summary of Refinement

Refinement 4 includes modifications to the surge basin slab at the Bethany Complex,[6] as shown on Figure 3-6.

Key features of Refinement 4 include:

- Reduced concrete volume and excavation volume.

Refinement 4 would not change:

- Surge basin surficial construction footprint.
- Structures above the ground surface.
- Operational performance of the tunnel or the surge basin.
- Hardscape area at the surge basin.

As described in the EPR, the surge basin slab at the Bethany Complex is located above the inlet that connects the tunnel to the pumping plant. Initial geotechnical information available at the time of preparation of the EPR indicated that the groundwater existed in an aquifer with high artesian conditions that could affect the stability of the soil conditions below the slab. These conditions could lead to differential uplift and settlement of the surge basin slab. To avoid surge basin uplift, the EPR included an array of 6-foot-diameter drilled shafts spaced at 16 feet on center. The drilled shafts would extend to depths of 60 feet below the bottom of the slab. The shafts' construction would consist of drilling a 6-foot-diameter hole, setting a steel reinforcement cage, and tremie pouring concrete to fill the drillhole. The uplift resistance would be provided by a combination of the weight of the slab and drilled shafts and the soil-to-shaft skin friction.

As the conceptual design continued, additional geotechnical information was obtained. Based on this information, Refinement 4 is based on use of six-strand tiedown anchors to support the surge basin

[6] An overview of the surge basin is included in Final EIR, Chapter 3, Section 3.14.1.2, *Bethany Reservoir Surge Basin* (California Department of Water Resources 2023a:3-122).

slab at the Bethany Complex, as shown on Figure 3-6. This design concept would not require the use of concrete or steel placed in the concrete or require excavation of drilled shafts as compared to the EPR design concepts, as summarized in Table 3-4. With Refinement 4, the aboveground portion of the surge basin would remain the same: 815 feet by 815 feet (California Department of Water Resources 2023a:3-118).

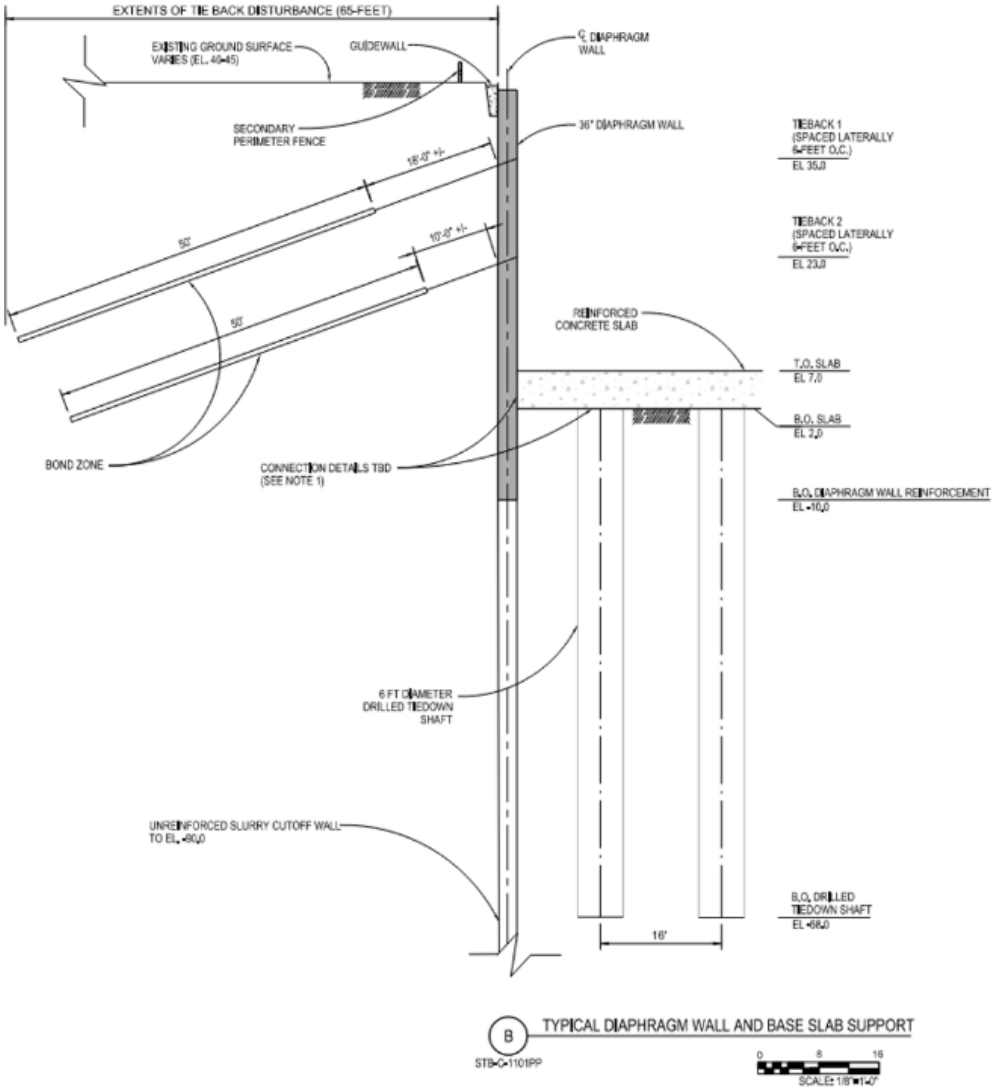

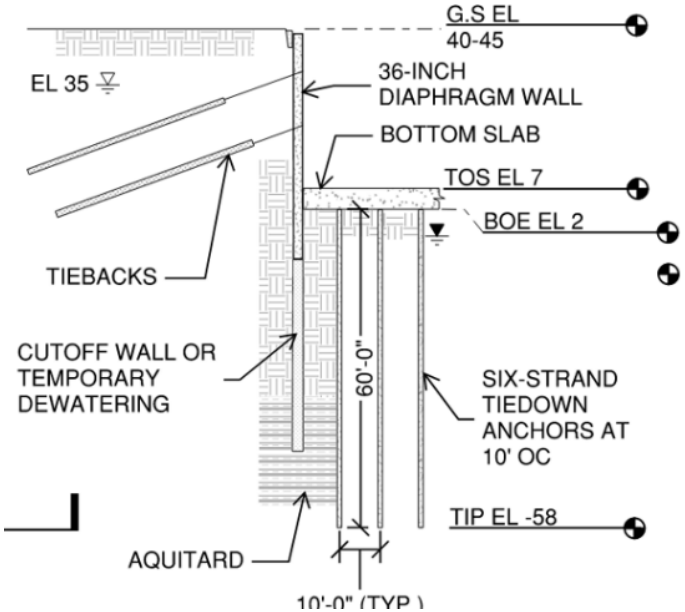

EPR Surge Basin Slab Configuration **Refinement 4 Surge Basin Configuration**

Figure 3-6. Comparison of Surge Basin Slab Configuration at the Bethany Complex for EPR and Refinement 4

Table 3-4. Estimated Construction Quantities for Surge Basin Slab at the Bethany Complex for EPR and Refinement 4

	EPR Drilled Shafts		Refinement 4 Steel Tendon Tiedown	
Item	**Quantity**	**Unit**	**Quantity**	**Unit**
Drilled shafts	2,564	each	N/A	N/A
Drilled shafts—total length	153,840	feet	N/A	N/A
Drilled shafts excavation	161,101	cubic yard (bulk)	N/A	N/A
Rebar	16,269	ton	N/A	N/A
Concrete	163,811	cubic yard (bulk)	N/A	N/A
Tiedown anchors	N/A	N/A	6,468	each
Tiedown anchors—total length	N/A	N/A	388,080	feet
Tiedown anchors excavation	N/A	N/A	5,017	cubic yard (bulk)
6-strand tiedown anchors, 270 ksi—total steel weight	N/A	N/A	862	ton
Tiedown anchor—steel baseplate and wedge plate total weight	N/A	N/A	174	ton
Tiedown anchors—total grout volume	N/A	N/A	4,887	cubic yard (bulk)
Tiedown stressing and proof testing (95% of tiedowns)	N/A	N/A	6,143	each
Tiedown performance testing (5% of tiedowns)	N/A	N/A	323	each
Tiedown verification tests (two sacrificial) tiedowns	N/A	N/A	2	each

Sources: California Department of Water Resources 2023a; Delta Conveyance Design and Construction Authority 2022a, 2022b.
ksi = kilopounds per square inch; N/A = not applicable.

Refinement 4 would not change the surficial construction footprint of the Bethany Reservoir Surge Basin or its aboveground structures. The area of hardscape at the surge basin would be the same; therefore, there would be no change in runoff volume from the surge basin site. Operational performance of the tunnel or the Bethany Reservoir Surge Basin would not change because the hydraulic operating conditions would not be modified by the surge basin foundation design or method of construction.

3.1.5 Refinement 5—Bethany Reservoir Aqueduct Dimensions

3.1.5.1 Purpose

Refinement 5 would reduce the diameter and spacing between the four pipelines that compose the Bethany Reservoir Aqueduct. This refinement would reduce the volume of excavated soil and need for controlled low-strength material (CLSM) backfill.

3.1.5.2 Summary of Refinement

Refinement 5 includes modifications to the dimensions of the Bethany Reservoir Aqueduct pipes,[7] as shown on Figures 3-7 and 3-8. It also would reduce the excavation and soil needed for CLSM and backfill.

Key features of Refinement 5 include:

- Reduced internal diameter of the pipes.
- Reduced space between pipe centerlines.
- Reduced bottom width of the trench.
- Reduced excavation.
- Reduced soil needed for CLSM and compacted backfill.

Refinement 5 would not change:

- Surficial construction footprint for the aqueduct.
- Trench top width and height.
- Length of the aqueduct.
- Structures above the ground surface.
- Operational performance of the Bethany Reservoir Aqueduct.
- Hardscape area along the aqueduct.

As described in Chapter 3, Section 3.14.1.3, *Bethany Reservoir Aqueduct*, of the Final EIR (California Department of Water Resources 2023a:3-123) and in the EPR, the conceptual design includes the Bethany Reservoir Aqueduct that extends between the Bethany Reservoir Pumping Plant and the Bethany Reservoir Discharge Structure. Most of the alignment between the Bethany Reservoir Pumping Plant and the Bethany Reservoir Discharge Structure was designed to be constructed using the open-trench method except for the crossings of the Central Valley Project Jones discharge pipelines and the tunneled crossing of the Bethany Reservoir Conservation Easement. The aqueduct included four 15-foot internal diameter pipelines (California Department of Water Resources 2023a:3-123). The pipelines would be placed in a trapezoidal-type trench that is 200 feet wide at the top of the trench and 115 feet wide at the bottom of the trench. The pipelines would be placed with 30 feet between the center of each pipe and the end pipes would be placed approximately 13 feet from the edge of the trench to the centerline of the outermost pipes. The tops of the pipes would extend above the existing ground surface; however, the trench would be backfilled such that the top of the pipes were covered by at least 6 feet of soil material (California Department of Water Resources 2023a:3-123). CLSM would be placed in the excavated trench around the pipes to a depth equal to 0.7 times the pipe diameter, as shown on Figure 3-7. Compacted fill would be placed above the CLSM 6 feet above the top of pipe.

As the conceptual design progressed, Refinement 5 was developed to reduce excavation volume and backfill requirements. With Refinement 5, the internal diameter of the pipes would be reduced from

[7] An overview of the Bethany Reservoir Aqueduct is included in Final EIR, Chapter 3, Section 3.14.1.3, *Bethany Reservoir Aqueduct* (California Department of Water Resources 2023a:3-123).

15 feet to 13.83 feet; a portion of this reduction is related to reducing the steel pipe wall thickness from 0.75 inch to 0.69 inch, as shown on Figure 3-8. The spacing between pipe centerlines would be reduced from 30 feet to 21 feet, and the distance from the outside wall of the end pipes to the trench wall would be reduced from 13 to 7.5 feet. Refinement 5 would also reduce the bottom width of the trench from 115 feet to 77 feet without changing the width or height of the top of the trench. Refinement 5 would also reduce the amount of excavation from 1,060,300 cubic yards to 842,800 cubic yards, and reduce the soil needed for CLSM and compacted backfill from 1,395,550 cubic yards to 1,187,500 cubic yards.

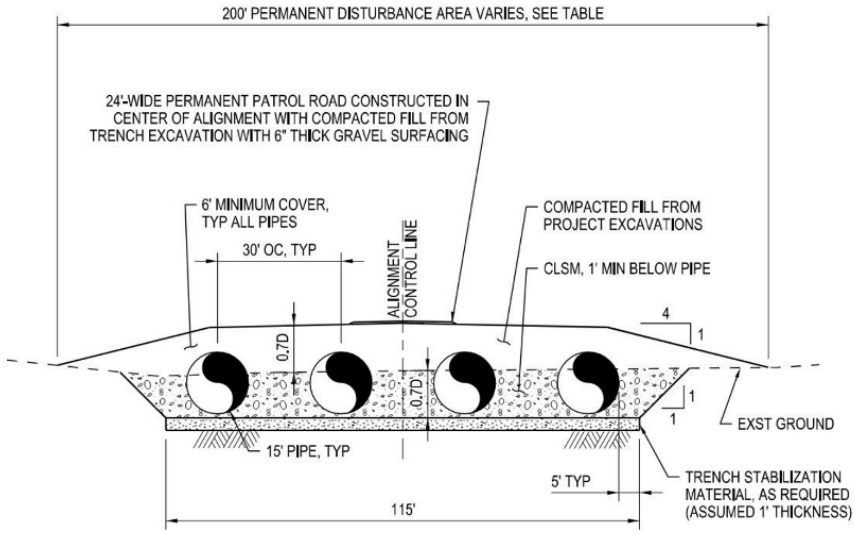

Figure 3-7. Bethany Reservoir Aqueduct Configuration in the EPR

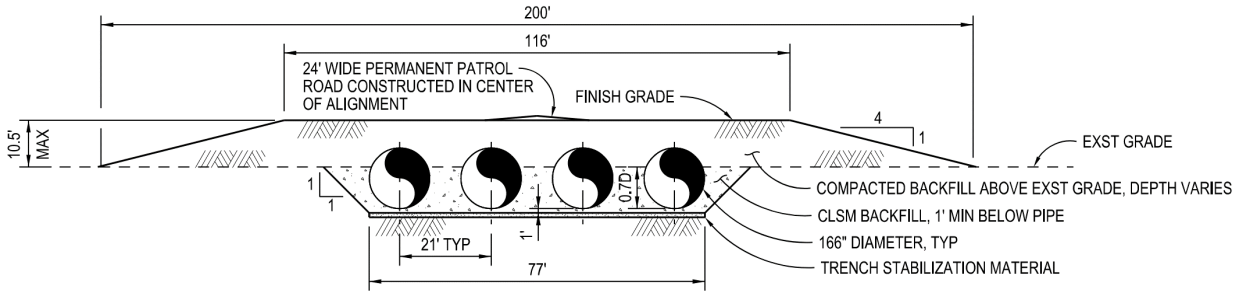

Figure 3-8. Bethany Reservoir Aqueduct Configuration in Refinement 5

Refinement 5 would not change the surficial construction footprint of the Bethany Reservoir Aqueduct, its length, the width or height of the top of the trench, or its aboveground structures. The area of hardscape along the aqueduct would be the same; therefore, there would be no change in runoff volume from the Bethany Reservoir Aqueduct site. The operational performance of the Bethany Reservoir Aqueduct would not change.

3.2 ITP Amendment Information

On February 14, 2025, CDFW issued ITP No. 2081-2024-018-00 to DWR for the construction and operation of the project (California Department of Fish and Wildlife 2025). DWR will file an ITP amendment application to address the information outlined in Chapter 2 and discussed further below. As discussed below, DWR's request to amend the ITP does not have the potential to create the conditions described in Section 15162 of the CEQA Guidelines that require preparation of a subsequent EIR.

3.2.1 Revision to the ITP Project Description to Remove Preliminary Geotechnical Activities

DWR will file an amendment application to ITP Section IV, *Project Description*, to clarify the preliminary geotechnical activities. These geotechnical activities are described in the Final EIR and commenced before the ITP was issued.[8] None of the preliminary geotechnical activities would occur in or over water, on levees, or within identified faults.

DWR prepared the *2024–2026 Preconstruction Field Investigations Environmental Compliance, Clearance, and Monitoring Plan* (Monitoring Plan) (California Department of Water Resources 2024b) to ensure compliance with the Final EIR MMRP (California Department of Water Resources 2023c). The amendment made to ITP Section IV, Section 21, *The Following Components Are Not Included as Covered Activities*, would include the subset of field investigations, described in ITP Section IV, Section 1, *Preconstruction Activities with Temporary Impacts*, Subsection 1.1, *Investigations to Support Section 408 Permitting - Soil Boring and Cone Penetration Tests*, and defined in the Final EIR, Chapter 3, *Description of the Proposed Project and Alternatives*, Section 3.15, *Field Investigations*, Section 3.15.1, *Investigations to Support Section 408 Permitting*, Section 3.15.1.1, *Soil Borings and Cone Penetration Tests*, that is comprised of land-based soil borings and cone penetration tests that would be completed before initiation of Delta Conveyance Project construction through December 31, 2029. All other field investigations described in ITP Section 1 are covered by the ITP and its take authorization.

As supported by the analysis in the Final EIR and Monitoring Plan, the preliminary geotechnical activities can be conducted without affecting CESA-listed species or other special-status species, as their specific locations can be adjusted to avoid sensitive resources. This adaptability, combined with adherence to the measures outlined in the Monitoring Plan, ensures minimal environmental disturbance. Removing a subset of the preliminary geotechnical activities described in the Final EIR and Monitoring Plan from the activities covered in the subsequently issued ITP would not create new significant impacts or increase the severity of a previously identified significant impact of the project as evaluated in the Final EIR. Additionally, no changes in circumstances or new information of substantial importance have been identified that could result in any new potentially significant impacts or a substantial increase in the severity of previously identified significant impacts.

[8] The preliminary geotechnical activities commenced in Spring 2024 under the 2023 Delta Conveyance Project Final EIR prior to issuance of the ITP.

3.2.2 Request for Take of Western Burrowing Owl

On October 10, 2024, the California Fish and Game Commission found the petition to list western burrowing owl (*Athene cunicularia* ssp. *hypugaea*) as threatened or endangered under CESA was warranted, thereby granting burrowing owl "Candidate Species" status. As a candidate for listing, the species is afforded the same protections as a state-listed endangered or threatened species. The population of western burrowing owl within the project study area is the Central Valley population; this population is a candidate for listing as threatened. Therefore, DWR will request an amendment to the ITP to include western burrowing owl as a Covered Species.

The Final EIR for the project included an analysis of western burrowing owl as a Species of Special Concern in Chapter 13, *Terrestrial Biological Resources*, Section 13.3.3.4, *Impacts of the Project Alternatives on Special-Status Wildlife Species* (California Department of Water Resources 2023a:13-349–13-359. Addendum 1, in Section 3.3.2.3, *Burrowing Owl*, included a discussion of the change in listing status for western burrowing owl from Species of Special Concern to Candidate Species after it was petitioned for listing as threatened (California Department of Water Resources 2025:3-10). Requesting to amend the ITP to cover western burrowing owl, a species that is evaluated in the previously certified Final EIR, does not require further environmental review pursuant to CEQA. The request does not constitute new information of substantial importance because it does not disclose new significant environmental impacts or a substantial increase in the severity of the species' significance conclusion as discussed in the Final EIR. Additionally, no changes in circumstances or new information of substantial importance have been identified for burrowing owl that could result in any new potentially significant impacts or a substantial increase in the severity of previously identified significant impacts.

Chapter 4
Environmental Analysis

This chapter analyzes the potential for the project refinements described in Section 3.1, *Project Refinements*, to affect impact conclusions disclosed in the Final EIR. As described for each resource analyzed, none of the conditions described in Section 15162 of the CEQA Guidelines calling for preparation of a subsequent EIR have occurred.

Potential environmental impacts from the project refinements described in Section 3.1 were considered for all resource areas evaluated in the Final EIR. The following environmental resource areas have been eliminated from further analysis in this Addendum because no potential exists for project refinements to have new significant environmental impacts or a substantial increase in the severity of previously identified significant impacts from what was analyzed in the Final EIR on the specified resources based on the nature and scope of the refinements to the project description. The project refinements would not change the surficial construction footprint, cause physical changes, or create the need for increased services that could affect these resources, and all refinements would fall well within the envelope of impacts analyzed for these resources.

- Surface Water
- Water Supply
- Flood Protection
- Water Quality
- Geology and Seismicity
- Soils
- Fish and Aquatic Resources
- Terrestrial Biological Resources
- Land Use
- Agricultural Resources
- Recreation
- Socioeconomics
- Cultural Resources
- Transportation
- Public Services and Utilities
- Air Quality and Greenhouse Gases
- Hazards, Hazardous Materials, and Wildfire
- Public Health
- Mineral Resources
- Paleontological Resources
- Environmental Justice
- Climate Change
- Growth Inducement
- Tribal Cultural Resources

None of the project refinements would result in changes to the surficial construction footprint for any project facilities, nor would any of them change the location and acreage of ground disturbance. Therefore, there would be no change in impacts related to resources such as terrestrial biological resources and agricultural resources. For example, there would be no change in the natural communities, habitat for special-status plant and wildlife species, terrestrial biological resources, or state- and federally- regulated wetlands and other waters (aquatic resources) that would be affected by the project, and there would be no change in land use conflicts or potential for conversion of farmland.

There would also be no change in impacts for those resources affected by project refinements related to subsurface excavation. Modifications to subsurface portions of facilities would reduce the total amount of excavated material and not result in increased potential for impacts on known or unknown cultural, Tribal cultural, or paleontological resources.

In addition, because the amount of excavated materials and construction material quantities (i.e., concrete) would be reduced, the impacts related to some resources will be reduced. For example, the reductions in excavated materials and construction material quantities will reduce off-road equipment activity hours and heavy-duty truck trips (for material movement), thereby reducing the amount of fugitive dust and construction exhaust emissions generated and truck trips on federal, state, and local roadways. Reduced excavation volumes will also reduce localized construction noise and energy use. Finally, none of the refinements would result in changes to flow or water storage conditions, cause an increase in water surface elevation, or alter project hardscaping that could increase runoff. Therefore, there would be no changes related to surface water or flood protection impacts.

Table 4-1 lists the resource areas that could be affected by the project refinements described in Section 3.1. Sections 4.1 through 4.6 present the impact analyses for each project refinement that could affect a resource.

Resource area discussions provide a concise summary of relevant impacts from the Final EIR, focusing specifically on project refinements that may result in a change in effect. Each resource section discussion explains how the project refinements, as discussed herein and in the *Project Refinements Report* (Delta Conveyance Design and Construction Authority 2025), would not result in new significant impacts or a substantial increase in the severity of a previously identified significant impact in the Final EIR and provides a CEQA conclusion statement. As discussed in this chapter, impacts associated with project refinements would be reduced or generally the same as those described in the Final EIR resource analysis (e.g., less-than-significant impacts remain less than significant). In addition, the environmental analyses described in the Final EIR used a conservative approach to the assessment of impacts and all impacts associated with project refinements fall well within the envelope of impacts analyzed in the Final EIR. For example, where uncertainties existed, DWR's subject experts intentionally reached more conservative impact conclusions in the Final EIR to account for those uncertainties and to avoid even the appearance of bias or partiality in the evaluation. This approach is demonstrated in Final EIR Chapter 15, *Agricultural Resources*, where impacts were deemed permanent if it was uncertain whether the agricultural land could be returned to productive farmland following the completion of construction activities. Similarly, in Final EIR Chapter 13, *Terrestrial Biological Resources*, impacts were deemed permanent where impacts would occur for more than 1 year in duration or where the area would not be restored to its pre-disturbance condition until the completion of the construction.

Table 4-1. Project Refinements as Analyzed for Specific Resources

Resource	Refinement 1—Intake Structure Configuration	Refinement 2—Optimization of Tunnel Profile and Shaft Dimensions	Refinement 3—Pumping Plant Below-Ground Configuration	Refinement 4—Surge Basin Slab Configuration	Refinement 5—Bethany Reservoir Aqueduct Dimensions
Groundwater	Analyzed	Analyzed	Analyzed	Analyzed	Analyzed
Aesthetics and Visual Resources	Analyzed	Not applicable	Not applicable	Not applicable	Not applicable
Energy	Not applicable [a]	Analyzed	Not applicable	Not applicable	Not applicable
Noise and Vibration	Not applicable	Analyzed	Not applicable	Not applicable	Not applicable

Note:

[a] Water would flow by gravity through the intake structure discharge pipes to the to the Bethany Reservoir Pumping Plant; therefore, changes in configuration of the discharge pipes would not result in changes in energy consumption (Delta Conveyance Design and Construction Authority 2022c; Delta Conveyance Design and Construction Authority 2022d).

4.1 Groundwater (Final EIR Chapter 8)

This section discusses the project refinements as they relate to the impacts discussed in Final EIR Chapter 8, *Groundwater* (i.e., Impacts GW-1 through GW-7).

4.1.1 Refinements 1, 2, 3, 4, and 5

This discussion pertains equally to Refinements 1, 2, 3, 4, and 5.

Implementation of the new intake facility configuration of Refinement 1, the lowered tunnel profile and refined shaft dimensions of Refinement 2, the new foundation and below-ground structural configuration of Bethany Reservoir Pumping Plant of Refinement 3, the modified foundation design for the surge basin slab at the Bethany Complex of Refinement 4, and the reduction of diameter and spacing between pipelines that comprise the Bethany Reservoir Aqueduct of Refinement 5 would not result in modification to the surficial footprint and would reduce the amount of material excavated for structures located at the intake sites; launch, maintenance, and reception shaft locations; Bethany Reservoir Pumping Plant; and aqueduct to Bethany Reservoir. The assessment of construction-related dewatering activities on groundwater resources and impact conclusions provided in Final EIR Chapter 8 (Impacts GW-1 through GW-7) would not change as a result of these refinements because none of these modifications would substantially increase or decrease the amount of construction-related dewatering required to complete construction of these facilities, nor would these modifications alter the local characteristics of groundwater hydrology.

4.1.2 Conclusion

Refinements 1, 2, 3, 4, and 5 would not change the less-than-significant impact conclusions for Impacts GW-1 through GW-7 identified and analyzed in the Final EIR or result in a new significant impact. All mitigation identified in the Final EIR applicable to impacts on groundwater resources would apply. Additionally, no changes in circumstances or new information of substantial importance have been identified for groundwater resources that could result in any new potentially significant impacts or a substantial increase in the severity of previously identified impacts on groundwater.

4.2 Aesthetics and Visual Resources (Final EIR Chapter 18)

This section discusses the project refinements as they relate to the impacts discussed in Final EIR Chapter 18, *Aesthetics and Visual Resources* (i.e., Impacts AES-1 through AES-4).

4.2.1 Refinement 1—Intake Structure Configuration

Implementation of the new intake facility configuration of Refinement 1 would result in minor modifications to the exterior of the intake structure. Impacts AES-1 through AES-3 in Final EIR Chapter 18 disclose that the project will result in significant and unavoidable impacts on aesthetics and visual resources associated with permanent project facilities, including intake structures. Although most of the intake facility modifications would either be underground or within the intake

structure, four intake access structures 13 feet high by 22.3 feet long by 5.3 feet wide above the stairways would be added to the top of the intake facility and would be visible from portions of State Route 160/River Road (a county-designated scenic route) and the Sacramento River (a scenic waterway corridor). The addition of the four stairway access structures would be a minor modification in the context of the overall larger intake structure and would be notably smaller and shorter than the gantry crane on the top of the intake structure. Also, any permanent lighting associated with this refinement would be downcast, with non-glare finishes on the fixture, as described in the Final EIR, Chapter 3, Section 3.4.12, *Fencing and Lighting*. The 40-foot-high gantry crane, identified on Figure 3-5 of Chapter 3 of the Final EIR, would remain the tallest feature on the intake facility with Refinement 1. Visual impacts on sensitive receptors would not increase in severity with Refinement 1 as compared to the Final EIR because most of the modifications would not be visible, and the visible modification (i.e., the stairway access structures) would be minor in comparison to the much larger gantry crane.

4.2.2 Conclusion

Refinement 1 would not change the less-than-significant impact conclusion for Impact AES-4 identified and analyzed in the Final EIR, substantially increase the severity of the previously identified significant impacts (Impacts AES-1 through AES-3) analyzed in the Final EIR, or result in a new significant impact. All mitigation identified in the Final EIR applicable to impacts on aesthetics and visual resources would apply. Additionally, no changes in circumstances or new information of substantial importance have been identified for aesthetics and visual resources that could result in any new potentially significant impacts or a substantial increase in the severity of previously identified significant impacts on aesthetics and visual resources.

4.3 Energy (Final EIR Chapter 22)

This section discusses the project refinements as they relate to the impacts discussed in Final EIR Chapter 22, *Energy* (i.e., Impacts ENG-1 and ENG-2).

4.3.1 Refinement 2—Optimization of Tunnel Profile and Shaft Dimensions

Implementation of the lowered tunnel profile and refined shaft dimensions of Refinement 2 would result in minor changes to short-term construction-related energy impacts. The increased excavation required to lower the project tunnel profile between Lower Roberts Island and Upper Jones Tract (Table 3-2) would result in a minor increase in energy consumption for tunnel construction in this reach compared to that identified in the Final EIR. However, because the diameter of the reception and maintenance shafts (excluding the surge basin) and other tunnel shafts (Table 3-3), and the depth of the tunnel invert slab thickness would be reduced as part of this refinement, there would be a reduction in soil excavation volume of approximately 52,250 cubic yards and, thus, there would be a reduction in the consumption of energy resources (i.e., diesel, gasoline, and electricity) related to excavation for these project components relative to that identified in the Final EIR Chapter 22 (Impacts ENG-1 and ENG-2). Similarly, reducing the invert slab thickness would reduce the volume of concrete required and the duration of 24-hour tremie concrete pours at the intakes and reception and maintenance shafts, which would reduce energy consumption relative to that estimated in the Final EIR.

Therefore, overall, energy consumption due to excavation of the tunnel reaches listed in Table 3-2 would not increase from that estimated in the Final EIR because the increased excavation required to lower the project tunnel profile would be offset by the reduced amount of excavation and reduced volume of concrete required for the other project components of Refinement 2.

In addition, the lowering of the tunnel profile with Refinement 2 would not change the flow rate of water or the height of the hydraulic head that determines pumping plant operations because water would be received at the same elevation at the pumping plant (Delta Conveyance Design and Construction Authority 2022c; Delta Conveyance Design and Construction Authority 2022d) and, therefore, would not result in an increase in energy consumption as compared to that estimated in the Final EIR.

4.3.2 Conclusion

Refinement 2 would not change the less-than-significant impact conclusion for Impact ENG-1 or the no impact conclusion for Impact ENG-2 identified and analyzed in the Final EIR, or result in a new significant impact. Additionally, no changes in circumstances or new information of substantial importance have been identified for energy resources that could result in any new potentially significant impacts or a substantial increase in the severity of previously identified impacts on energy resources.

4.4 Noise and Vibration (Final EIR Chapter 24)

This section discusses the project refinements as they relate to the impacts discussed in Final EIR Chapter 24, *Noise and Vibration*. The discussion is applicable to Impacts NOI-1 and NOI-2. The discussion is not applicable to Impact NOI-3 because project facilities, and therefore the project refinements, would be outside the 60 day-night sound level (L_{dn}) noise level contour and outside the Airport Influence Area of any airports.

4.4.1 Refinement 2—Optimization of Tunnel Profile and Shaft Dimensions

Implementation of the lowered tunnel profile and refined shaft dimensions of Refinement 2 is consistent with long-term construction at Lower Roberts Island and Upper Jones Tract described in the Final EIR. Impact NOI-1 in Final EIR Chapter 24 discloses that the project will result in significant and unavoidable construction-related exceedances of daytime noise level criteria associated with the construction of project infrastructure, including tunnel shafts. The reduction in excavation and concrete pours would reduce the duration of noise impacts evaluated in the Final EIR, but construction work at the tunnel shafts would still be considered a long-term effect. Noise impacts on sensitive receptors would not increase in severity with Refinement 2 as compared to the Final EIR because construction sound levels in terms of hourly equivalent sound level (L_{eq}) values would be the same as the Final EIR. For similar reasons vibration impacts during construction would be the same as reported for Impact NOI-2 in the Final EIR because proximities of work areas to sensitive land uses would not be modified under Refinement 2.

4.4.2 Conclusion

Refinement 2 would not change the less-than-significant impact conclusion for Impact NOI-2 identified and analyzed in the Final EIR, substantially increase the severity of the previously identified significant impact (Impact NOI-1) analyzed in the Final EIR, or result in a new significant impact. All mitigation identified in the Final EIR applicable to noise and vibration impacts would apply.[9] Additionally, no changes in circumstances or new information of substantial importance have been identified for noise and vibration that could result in any new potentially significant impacts or a substantial increase in the severity of previously identified significant impacts on noise and vibration.

[9] Mitigation Measure NOI-1: *Develop and Implement a Noise Control Plan,* described in the Final EIR, would apply to this refinement. Additionally, the Final EIR concluded that if all eligible property owners participate in the mitigation, the impacts would be less than significant with mitigation, and the same would apply under implementation of Refinement 2.

Chapter 5
Cumulative Effects

Cumulative impacts consist of impacts that are created as a result of the combination of the project with other closely related projects that would cause related impacts (CEQA Guidelines § 15130 (a)(1)). The focus under CEQA cumulative impacts is on whether the project's incremental contribution to any significant cumulative impact is cumulatively considerable and thus significant in and of itself (CEQA Guidelines § 15065(a)(3)). The related past, present, and reasonably foreseeable probable future projects and programs to be considered in the cumulative impacts analysis generally (though not always) are not components of, or outgrowths from, the individual identified projects or programs. Rather, the identified projects and programs are usually separate and distinct, often with different lead entities that may cause impacts similar to, or related to, those of the project or alternatives.

As discussed in Chapter 1, *Introduction*, CEQA requires the preparation of a subsequent EIR when substantial changes are proposed in the project or substantial changes occur with respect to the circumstances under which the project is undertaken that require major revisions of the previous EIR due to the involvement of new significant environmental impacts or a substantial increase in the severity of previously identified significant impacts. No substantial changes in circumstances, new significant environmental impacts, or substantial increase in the severity of previously identified significant impacts have been identified by the analysis in this Addendum. The environmental analysis provided in Chapter 4, *Environmental Analysis*, evaluates specific resource areas that could be affected by the project refinements relative to the Final EIR environmental analysis. As discussed in the individual resource-specific analyses in Chapter 4, potential effects of the refined project would not increase as compared to the Final EIR, and the impact conclusions described in the Final EIR will remain the same for the project with the project refinements evaluated in this Addendum.

Since certification of the Final EIR, some changes have occurred with respect to the reasonably foreseeable probable future projects relevant to the Final EIR's cumulative impact analysis. Specifically, one of the reasonably foreseeable probable future projects identified in the Final EIR, the Los Vaqueros Reservoir Expansion Project, is no longer reasonably foreseeable and a few other projects—including the RiverArc Project, West False River Drought Salinity Barrier Project, Mokelumne Aqueducts Replacement Project, South Delta Gates Project, and Water Plus Project[10]—are now considered reasonably foreseeable probable future projects. However, these changes in reasonably foreseeable probable future projects do not change the significance of the project's contribution to cumulative impacts as evaluated in the Final EIR's cumulative impact analysis and, therefore, do not constitute substantial changes in the circumstances under which the project will be undertaken that require major revisions of the Final EIR due to the involvement of new significant environmental impacts or a substantial increase in the severity of previously identified significant impacts.

[10] RiverArc Project: www.riverarcproject.com; West False River Drought Salinity Barrier Project (https://water.ca.gov/Water-Basics/Drought/Saltwater-Intrusion-and-Drought-Salinity-Barriers); Mokelumne Aqueducts Replacement Project (https://www.ebmud.com/about-us/construction-and-maintenance/construction-my-neighborhood/mokelumne-aqueducts-resiliency-project-marp); South Delta Gates Project (https://water.ca.gov/Programs/State-Water-Project/Operations-and-Maintenance/South-Delta-Gates-Project); Water Plus Project (https://www.cityofsacramento.gov/utilities/projects/waterplus).

All of the project refinements are proposed within the project construction footprint described in the Final EIR, and all impacts associated with project refinements fall well within the envelope of impacts associated with the conservative project assumptions analyzed in the Final EIR. Considering the scope of the project refinements, the refined project's incremental contribution to cumulatively significant impacts would not increase relative to the Final EIR analyses. Thus, the project refinements do not change the cumulative analysis conclusions described in the Final EIR.

Chapter 6
Conclusion/Summary of Findings

As described in Chapter 4, *Environmental Analysis,* resource areas were assessed to determine whether the project refinements made to the Final EIR, as discussed in Chapter 3, *Description of Project Refinements,* would create new significant impacts or increase the severity of a previously identified impact in the Final EIR or otherwise create the conditions described in Section 15162 of the CEQA Guidelines that require preparation of a subsequent EIR. In consideration of currently available information, the project, as refined will not result in any new significant impacts or increase the severity of previously identified significant impacts described in the Final EIR.

Chapter 7
References Cited

California Department of Fish and Wildlife. 2025. *California Endangered Species Act and Native Plant Protection Act Incidental Take Permit No. 2081-2024-018-00 for Construction and Operation of the Delta Conveyance Project*. February 14. Available: https://www.deltaconveyanceproject.com/planning-processes/california-endangered-species-act/incidental-take-permit.

California Department of Water Resources. 2023a. *Delta Conveyance Project Final Environmental Impact Report*. Volume 1. December. (ICF 103653.0.003.) Sacramento, CA. Prepared by ICF, Sacramento, CA. Available: https://www.deltaconveyanceproject.com/planning-processes/california-environmental-quality-act/final-eir.

California Department of Water Resources. 2023b. *Delta Conveyance Project CEQA Findings of Fact and Statement of Overriding Considerations*. Sacramento, CA. Available: https://cadwr.app.box.com/s/viirli4p3bu311uayvdwcmgjv6kfd34c.

California Department of Water Resources. 2023c. *Delta Conveyance Project Mitigation Monitoring and Reporting Program.* December. (ICF 103653.0.003.) Sacramento, CA. Prepared by ICF, Sacramento, CA. (Clarifying revisions made on March 11, 2025.) Available: https://cadwr.app.box.com/s/qct5ey81zeyaxouccc25yyrotzfh2wq8.

California Department of Water Resources. 2024a. *Errata to the CEQA Findings of Fact for the Delta Conveyance Project.* March. Sacramento, CA. Available: https://www.deltaconveyanceproject.com/planning-processes/california-environmental-quality-act/final-eir/final-eir-document.

California Department of Water Resources. 2024b. *2024–2026 Preconstruction Field Investigations Environmental Compliance, Clearance, and Monitoring Plan.* Sacramento, CA.

California Department of Water Resources. 2025. *Addendum to the Final Environmental Impact Report for the Delta Conveyance Project*. February. (ICF 103653.0.003) Sacramento, CA. Prepared for California Department of Water Resources, Sacramento, CA. Available: https://cadwr.app.box.com/s/q9gj97auucmj3tb8vv4493afj20cp634.

Delta Conveyance Design and Construction Authority. 2022a. *Volume 1: Delta Conveyance Final Draft Engineering Project Report—Central and Eastern Options*. May 2022. Sacramento, CA.

Delta Conveyance Design and Construction Authority. 2022b. *Volume 1: Delta Conveyance Final Draft Engineering Project Report—Bethany Reservoir Alternative*. May 2022. Sacramento, CA.

Delta Conveyance Design and Construction Authority. 2022c. Tunnel Gravity Flow Capacity Analysis (Final Draft). Technical Memorandum. *Volume 1: Delta Conveyance Final Draft Engineering Project Report—Central and Eastern Options*. May 2022. Sacramento, CA.

Delta Conveyance Design and Construction Authority. 2022d. Hydraulic Analysis of Delta Conveyance Options – Bethany Reservoir Alternative (Final Draft). Technical Memorandum. *Volume 1: Delta Conveyance Final Draft Engineering Project Report— Bethany Reservoir Alternative*. May 2022. Sacramento, CA.

Delta Conveyance Design and Construction Authority. 2023. *Bethany Reservoir Alternative Engineering Project Report Update.* November 2023. Sacramento, CA.

Delta Conveyance Design and Construction Authority. 2025. *Final Draft Project Refinements Report*. August 2025. Sacramento, CA.