APPENDIX O -
PRELIMINARY DRAINAGE REPORT

PRELIMINARY DRAINAGE STUDY

FOR

Camarillo Springs Golf Course for Tentative Tract Map No. 6016

City of Camarillo, California

August 26, 2019

PREPARED FOR

New Urban West, Inc.
Attention: Kevin Harbison
2001 Wilshire Blvd., Suite 401
Santa Monica, CA 90403

Encompass Consultant Group
333 N. Lantana St., Suite 287
Camarillo, CA 93010
(805) 416-1698
W.O. 0381



TABLE OF CONTENTS

Section 1 Introduction / Project Description ..... - 1 -

Figure 1: Project Location Map ..... - 1 -

Section 2 Mitigation Criteria ..... - 1 -

Section 3 Peak Runoff Analysis ..... - 2 -

3.1 Developed Condition Peak Runoff ..... - 2 -
Table 1: Impervious Area Summary ..... - 2 -
Table 2: Time of Concentration Summary ..... - 3 -
Table 3: Peak Runoff Summary ..... - 3 -
3.2 Model Results and Areal Reduction ..... - 3 -

Section 4 Mitigation ..... - 4 -

4.1 Developed Condition Flood Storage and Conveyance ..... - 4 -
4.2 Water Quality Impact Mitigation ..... - 4 -
4.3 Hydromodification ..... - 5 -

Section 5 FEMA Flood Hazard ..... - 5 -

Section 6 Hydraulics ..... - 6 -

Table 4: Storm Drain Hydraulics ..... - 6 -

Section 7 Summary & Conclusions ..... - 6 -

Section 8 Appendices ..... - 8 -

- Appendix I - Hydrology Calculations
- Appendix II - Hydraulic Calculations
- Appendix III - Drainage Map
- Appendix IV - Reference Materials
- Appendix V – Approved Post Construction Stormwater Management Plan

SECTION 1 INTRODUCTION / PROJECT DESCRIPTION

The project area is located within the southeastern part of the City limits of Camarillo, currently zoned as Rural Exclusive. The 34-acre, 296-lot proposed development will consist of 248 single family dwelling units, 20 paseo/park lots, recreation space, private street/drive lots, open space, and a basin/pond designated as a flood water storage area. The site is located on the Camarillo Springs Golf Course as depicted in Figure 1 below.



Figure 1: Project Location Map

SECTION 2 MITIGATION CRITERIA

The Master Drainage Plan / FEMA Conditional Letter of Map Revision (MDP), dated October 2018, for the Camarillo Hills Golf Course was prepared by PACE Advanced Water Engineering. With the MDP addressing the regional and onsite hydrology and floodplain hydraulics resulting from the proposed Camarillo Springs Golf Course development, this drainage study will focus on the drainage conditions within the project site. However, the MPD will be referenced for design guidance regarding local level drainage measures to provide the appropriate level of flood protection. The MPD was prepared in coordination with the previous Civil Engineering firm (Jensen Design and Survey, Inc.), to develop flood conveyance and a storage system addressing the floodplain hydraulics and flood storage capacity of the project.

Mitigation of the potential water quality impacts, through Best Management Practices (BMPs) (as described in the 2011 Ventura County Technical Guidance Manual [TGM], Errata Update 2015, and the Ventura County Municipal Stormwater Permit [Order 2010-0108]) have been addressed in the Post Construction Stormwater Management Plan (PCSMP) prepared by Jensen Design (dated March 5th, 2019), and approved by the City. A copy of the PCSMP has been included in Appendix V for reference.

SECTION 3 PEAK RUNOFF ANALYSIS

3.1 DEVELOPED CONDITION PEAK RUNOFF

The following is a summary of the sources and assumptions used to perform the time of concentration (Tc) and peak flow calculations using the methodology the Ventura County Watershed Protection District (VCWPD) outlined in the Design Hydrology Manual, Updated July, 2017:

a. The site is subdivided into three drainage subareas with a predominant soil type of County Soil Number 2, used in the development of the VCRat model.
b. The project area is located within Rain Zone 1, Conejo Creek.
c. The contours from the topographic survey information produced by Cooper Aerial Surveys Co. were used for elevation references.
d. The actual impervious values of the developed condition subareas, used in VCRat2.64, are summarized in the following table.

Table 1: Impervious Area Summary

Subarea	Area (acres)	Total Area (acres)	Total Imp (%)
1	10.4	6.8	65.4
2	23.0	13.7	59.6
3	0.7	0.4	57.1

e. The flow paths used in the Tc calculations and VCRat models are depicted in the Drainage Area Map located in Appendix III.
f. Results of the Tc calculation are provided in Appendix I. Below is a summary of the results for all storm frequencies in minutes:

Table 2: Time of Concentration Summary

Storm Frequency	Subarea 1	Subarea 2	Subarea 3*
$Tc_{10\text{-yr}}$ (min)	9	15	-
$Tc_{25\text{-yr}}$ (min)	8	12	-
$Tc_{50\text{-yr}}$ (min)	7	9	-
$Tc_{100\text{-yr}}$ (min)	6	8	-

(*) Due to the relatively small tributary area, runoff derived from prorated peak values of Drainage Area 1. Therefore, Tc was note determined for Drainage Area 3.

g. Results for the existing condition VCRat models are provided in Appendix I and summarized below:

Table 3: Peak Runoff Summary

Subarea	Area (acres)	Q_{10} (cfs)	Q_{25} (cfs)	Q_{50} (cfs)	Q_{100} (cfs)
1	10.4	16.6	20.8	26.0	31.2
2	23.0	26.0	36.0	48.0	57.0
3	0.7	1.1	1.4	1.8	2.1
Total	34.1	43.7	58.2	75.8	90.3

3.2 MODEL RESULTS AND AREAL REDUCTION

The Hydrology Manual states that an areal reduction factor is applied to a "*watershed greater than about 1 square mile, which is considered to have spatially variable rainfall that will result in a reduced peak flow/area ratio compared to a smaller watershed with the same runoff characteristics*". As stated in the MPD, the Camarillo Springs Creek Local Watershed directly tributary to the Camarillo Springs Golf Course is approximately 1.7 square miles. Therefore, areal reduction was applied to the FEMA Model peak flow results.

The hydrology models provide theoretical peak flows with the assumption that there are no hydrologic constraints. However, this is not always the case as some inlets are sized to capture smaller storm events, such as the 10-year frequency, or when channel capacities are reduced. For this project, the on-site storm drain system will be sized to accept and convey the peak flow generated during the 50-year storm event. Runoff in excess of this frequency

will surface flow along the street gutters and routed towards the basin to address the mitigation criteria of the MPD.

SECTION 4 MITIGATION

4.1 DEVELOPED CONDITION FLOOD STORAGE AND CONVEYANCE

The raising of the development site results in a reduction of the floodplain capacity in the overbank area of Conejo Creek, with the MPD calculating the volume reduction at about 400 ac-ft. To manage the removed storage volume, an on-site system was configured that provides flood storage of approximately 90 acre-ft at the current lake system located on the main golf course area. An additional 320 acre-ft of storage volume is created within the south golf course area after excavation for fill required to raise the project site. To allow golfing in the storage areas, the MPD states that the excess lake storage will drain in approximately 24-hours, and the south area greens will be raised above frequent storm water surface elevations.

4.2 WATER QUALITY IMPACT MITIGATION

Infiltration was determined to be technically infeasible, as stated by the Feasibility of On-Site Stormwater Infiltration Letter-Report prepared by GeoLabs – Westlake Village (Work Order 9359, dated October 19, 2018), and included as part of the PCSMP. Geotechnical considerations cited included near surface soils that consists primarily of clay-rich mixtures with low permeability, and groundwater at shallow depths throughout the development area that would preclude implementation of infiltration-type BMPs.

Referencing the biofiltration and proprietary BMPs specified in the approved PCSMP (a copy included in Appendix V for reference), the Ventura County Technical Guidance Manual requirements regarding the water quality impacts associated with the development of this project are addressed by the application of the following:

a. **Vegetated Swale:** As stated in the TGM, Vegetated swales provide pollutant removal through settling and filtration in the vegetation (usually grasses) lining the channels, provide the opportunity for stormwater volume reduction through infiltration and evapotranspiration, reduce the flow velocity, and conveying stormwater runoff.
    - Drainage Area 1: The approved PCSMP specified a 243-ft long vegetated swale, with a 16-ft bottom with and swale divider, to treat the Stormwater Quality Design Flow (SQDF) generated by the 11.97 acres of Drainage Area 1. The current configuration of the project reduces Drainage Area 1 to 10.4 acres, but increases the provided vegetated swale length to 260 feet.

    - Drainage Area 3: The approved PCSMP specified a 203-ft long vegetated swale, with a 6-ft bottom width, to treat the SQDF generated by the 4.2 acres of Drainage Area 3. However, Drainage Area 3 reduces to 0.7 acres

in the current configuration of the project. Prorating the approved vegetated swale for Drainage Area 3 (203-ft swale / 4.2 acres = 49 ft/acre), and applying it to the current area of 0.7 acres, the required swale length is only about 35-ft. The length will be increased to the minimum vegetated swale length of 100 feet required by the TGM.

b. **Hydrodynamic Separation Device Upstream of a Wet Detention Basin:** Hydrodynamic separation devices remove trash, debris, and coarse sediment from incoming flows using screening, gravity settling, and centrifugal forces generated by forcing the influent into a circular motion. The approved PCSMP proposes Contech's CDS hydrodynamic separator (Model CDS4040-8-C) in an off-line configuration, with a rated treatment capacity of 6.0 cfs.
    - Drainage Area 2: The current configuration of the project increases Drainage Area 2 to 23.0 acres, as well as the required SQDF. Referencing the parameters specified by the BMP Sizing Worksheet in the approved PCSMP, and applying the current area of Drainage Area 3, the updated SQDF = 0.78 * (0.33 in/hr) * 23.0 acres = 5.92 cfs < 6.0 cfs treatment capacity of Model CDS4040-8-C. Therefore, the CDS unit proposed in the approved PCSMP is still applicable for the current site configuration.

c. **Certified Full Capture System:** The development will implement 'Full Capture System Devices' certified by the State Water Resources Control Board Executive Director in compliance with the Statewide Trash Amendments in specific catch basin locations within Drainage Area 2, and at the downstream end of the vegetated swales of Drainage Areas 1 and 3. The approved PCSMP specifies the ADS FlexStorm Connector Pipe Screen.

4.3 HYDROMODIFICATION

The Interim Hydromodification Control Criteria in the TGM Step 8b: Hydromodification (Flow/Volume/Duration) Control Criteria states that *"Projects disturbing less than 50 acres must comply with the Stormwater Management Standards contained in the 2011 TGM (i.e., a combination of Retention BMPs, Biofiltration BMPs, and/or Treatment Control Measures)".* With the runoff generated within the project site discharging into a combination of Biofiltration BMPs (Vegetated Swales – Drainage Areas 1 and 3) and Treatment Control Measures (Hydrodynamic Separation Device Upstream of a Wet Detention Basin – Drainage Area 2), the project complies with the interim criteria of the TGM.

SECTION 5 FEMA FLOOD HAZARD

The FEMA Flood Map Service Center (https://msc.fema.gov/portal) provides the site-specific Flood Hazard Maps relevant to the project site (Panels 06111C0953E). The FIRMette of the project area shows that the site is Zone AE, a Special Flood Hazard Area with a Base Flood

Elevation of 118 feet. The project area has been raised relative to the existing condition, with finished grade elevations ranging approximately from 120 feet to 128 feet. The FIRMette is provided in Appendix IV for reference.

Additionally, as stated in the "Conclusions" Section of the MPD, the following main points in the MDP/CLOMR study were established for the Camarillo Springs Golf Course project:

- The Camarillo Springs Golf Course is located within a 100-year FEMA floodplain resulting primarily from overbank flow from Conejo Creek, but is also affected by tributary runoff flowing through the golf course from the local Camarillo Springs Creek watershed.
- There are approximately 153 homes located within the 100-year FEMA floodplain to the south and southwest of the golf course.
- The project development includes a flood barrier that will remove the 153 homes from the 100-year floodplain.
- A HEC-RAS 2D model comparison between proposed with project condition and existing current condition shows that flow depths do not increase, except on the south area where excavation is allowing more flood storage capacity. The remainder of the project area as well as the location of the 153 homes in the 100-year effective FEMA floodplain experience a flow depth decrease in the proposed condition.
- The HEC-RAS 2D model comparison also shows that FEMA Base Flood Elevations (BFEs) do not increase near the property, and flow velocities remain low, with changes highly localized. Additionally, the floodplain limits remain the same outside of the property.

SECTION 6 HYDRAULICS

Table 4: Storm Drain Hydraulics

Storm Drain	Pipe Size	Pipe Slope	Tributary Area (acres)	Q_{50} – Tributary Flows (cfs)	Full Flow Capacity (cfs)
Line 1	24-inch	0.020 ft/ft	10.4	26.0	32.0
Line 2	36-inch	0.006 ft/ft	23.0	48.0	51.7
Line 3	18-inch	0.005 ft/ft	0.7	1.8	7.4

SECTION 7 SUMMARY & CONCLUSIONS

The development of approximately 34 acres within the Camarillo Springs Golf Course will consist of 248 single family dwelling units, 20 paseo/park lots, recreation space, private street/drive lots, open space, and a basin/pond for flood water storage. The site will be raised

to elevate the development above the Base Flood Elevation of approximately 118 feet. The reduction of the floodplain capacity in the overbank area of Conejo Creek is addressed by providing flood storage of approximately 90 acre-ft at the current lake system located on the main golf course area, with an additional 320 acre-ft of storage volume at the south golf course area. Golfing in the storage areas is still possible since the excess lake storage drains in approximately 24-hours, and the south area greens will be raised above frequent storm water surface elevations.

Since the project disturbs less than 50 acres, the Interim Hydromodification Control Criteria is addressed with the implementation of Biofiltration BMPs (Vegetated Swales) and Treatment Control Measures (Hydrodynamic Separation Device Upstream of a Wet Detention Basin).

A FIRMette created for the project area shows that the site is within the “Special Flood Hazard Zone” - Zone AE, with a Base Flood Elevation of 118 feet. The project area has been raised, with finished grade elevations ranging approximately from 120 feet to 128 feet.

SECTION 8 APPENDICES

APPENDIX I – HYDROLOGY CALCULATIONS

VENTURA COUNTY WATERSHED PROTECTION DISTRICT
TIME OF CONCENTRATION
TC Program Version: 2.64.0.30
Project: Camarillo Springs Golf Course
Date: 8/22/2019 1:37:05 PM
Engineer: TJS
Consultant: ECG

Watershed Name: Camarillo Springs Golf Course - Developed Condition

---

Sub-Area Name: Drainage Area 1
Computing Tc for all rainfall frequencies for sub-area Drainage Area 1...

Tc for frequency = 10.00: 9.240 Minutes
DATA FOR SUB AREA 1

SUB AREA TIME OF CONCENTRATION: 9.240 min. = 9 min.

SUB AREA INPUT DATA

Sub Area Name: Drainage Area 1
Total Area (ac): 10.4
Flood Zone: 3
Rainfall Zone: K
Storm Frequency (years): 10
Development Type: Residential
Soil Type: 2.00
Percent Impervious: 65
SUB AREA OUTPUT

Intensity (in/hr): 2.680
C Total: 0.901
Sum Q Segments (cfs): 25.12
Q Total (cfs): 25.12
Sum Percent Area (%): 100.0
Sum of Flow Path Travel Times (sec): 554.40
Time of Concentration (min): 9.240

DATA FOR FLOW PATH 1

Flow Path Name: Overland Flow
FLOW PATH TRAVEL TIME (min): 5.7681
Flow Type: Overland
Length (ft): 140
Top Elevation (ft): 128
Bottom Elevation (ft): 127
Contributing Area (acres): 0.3
Percent of Sub-Area (%): 2.9
Overland Type: Valley
Development Type: Residential
Map Slope: 0.0071
Effective Slope: 0.0071
Q for Flow Path (cfs): 0.72
Avg Velocity (ft/s): 0.40
Passed Scour Check: N/A
DATA FOR FLOW PATH 2

Flow Path Name: Street Flow
FLOW PATH TRAVEL TIME (min): 2.6033
Flow Type: Street
Length (ft): 400
Top Elevation (ft): 127
Bottom Elevation (ft): 124
Contributing Area (acres): 1.24
Percent of Sub-Area (%): 11.9
Street Width (ft): 32
Curb Height (in): 6
Map Slope: 0.0075
Q for Flow Path (cfs): 2.99
Q Top (cfs): 0.72
Q Bottom (cfs): 3.72

Velocity Top (ft/s): 1.36
Velocity Bottom (ft/s): 2.05
Avg Velocity (ft/s): 1.71
Wave Velocity (ft/s): 2.56
DATA FOR FLOW PATH 3

Flow Path Name: Pipe Flow
FLOW PATH TRAVEL TIME (min): 0.8686
Flow Type: Pipe
Length (ft): 370
Top Elevation (ft): 121
Bottom Elevation (ft): 117
Contributing Area (acres): 8.86
Percent of Sub-Area (%): 85.2
Initial Pipe Diameter (in): 33
Calculated Pipe Diameter (in): 27
Used Pipe Diameter (in): 33
Manning's N: 0.013
Map Slope: 0.0108
Q for Flow Path (cfs): 21.40
Q Top (cfs): 3.72
Q Bottom (cfs): 25.12
Avg Velocity (ft/s): 5.26
Wave Velocity (ft/s): 7.10
Tc for frequency = 25.00: 7.873 Minutes
DATA FOR SUB AREA 1

SUB AREA TIME OF CONCENTRATION: 7.873 min. = 8 min.

SUB AREA INPUT DATA

Sub Area Name: Drainage Area 1
Total Area (ac): 10.4
Flood Zone: 3
Rainfall Zone: K
Storm Frequency (years): 25
Development Type: Residential
Soil Type: 2.00
Percent Impervious: 65
SUB AREA OUTPUT

Intensity (in/hr): 3.191
C Total: 0.910
Sum Q Segments (cfs): 30.22
Q Total (cfs): 30.22
Sum Percent Area (%): 100.0
Sum of Flow Path Travel Times (sec): 472.35
Time of Concentration (min): 7.873

DATA FOR FLOW PATH 1

Flow Path Name: Overland Flow
FLOW PATH TRAVEL TIME (min): 4.5447
Flow Type: Overland
Length (ft): 140
Top Elevation (ft): 128
Bottom Elevation (ft): 127
Contributing Area (acres): 0.3
Percent of Sub-Area (%): 2.9
Overland Type: Valley
Development Type: Residential
Map Slope: 0.0071
Effective Slope: 0.0071
Q for Flow Path (cfs): 0.87
Avg Velocity (ft/s): 0.51
Passed Scour Check: N/A
DATA FOR FLOW PATH 2

Flow Path Name: Street Flow
FLOW PATH TRAVEL TIME (min): 2.4850
Flow Type: Street

Length (ft): 400
Top Elevation (ft): 127
Bottom Elevation (ft): 124
Contributing Area (acres): 1.24
Percent of Sub-Area (%): 11.9
Street Width (ft): 32
Curb Height (in): 6
Map Slope: 0.0075
Q for Flow Path (cfs): 3.60
Q Top (cfs): 0.87
Q Bottom (cfs): 4.47
Velocity Top (ft/s): 1.43
Velocity Bottom (ft/s): 2.15
Avg Velocity (ft/s): 1.79
Wave Velocity (ft/s): 2.68
DATA FOR FLOW PATH 3

Flow Path Name: Pipe Flow
FLOW PATH TRAVEL TIME (min): 0.8429
Flow Type: Pipe
Length (ft): 370
Top Elevation (ft): 121
Bottom Elevation (ft): 117
Contributing Area (acres): 8.86
Percent of Sub-Area (%): 85.2
Initial Pipe Diameter (in): 33
Calculated Pipe Diameter (in): 27
Used Pipe Diameter (in): 33
Manning's N: 0.013
Map Slope: 0.0108
Q for Flow Path (cfs): 25.74
Q Top (cfs): 4.47
Q Bottom (cfs): 30.22
Avg Velocity (ft/s): 5.52
Wave Velocity (ft/s): 7.32
Tc for frequency = 50.00: 6.909 Minutes
DATA FOR SUB AREA 1

SUB AREA TIME OF CONCENTRATION: 6.909 min. = 7 min.

SUB AREA INPUT DATA

Sub Area Name: Drainage Area 1
Total Area (ac): 10.4
Flood Zone: 3
Rainfall Zone: K
Storm Frequency (years): 50
Development Type: Residential
Soil Type: 2.00
Percent Impervious: 65
SUB AREA OUTPUT

Intensity (in/hr): 3.771
C Total: 0.918
Sum Q Segments (cfs): 36.02
Q Total (cfs): 36.02
Sum Percent Area (%): 100.0
Sum of Flow Path Travel Times (sec): 414.55
Time of Concentration (min): 6.909

DATA FOR FLOW PATH 1

Flow Path Name: Overland Flow
FLOW PATH TRAVEL TIME (min): 3.8857
Flow Type: Overland
Length (ft): 140
Top Elevation (ft): 128
Bottom Elevation (ft): 127
Contributing Area (acres): 0.3
Percent of Sub-Area (%): 2.9
Overland Type: Valley

Development Type: Residential
Map Slope: 0.0071
Effective Slope: 0.0071
Q for Flow Path (cfs): 1.04
Avg Velocity (ft/s): 0.60
Passed Scour Check: N/A
DATA FOR FLOW PATH 2

Flow Path Name: Street Flow
FLOW PATH TRAVEL TIME (min): 2.3776
Flow Type: Street
Length (ft): 400
Top Elevation (ft): 127
Bottom Elevation (ft): 124
Contributing Area (acres): 1.24
Percent of Sub-Area (%): 11.9
Street Width (ft): 32
Curb Height (in): 6
Map Slope: 0.0075
Q for Flow Path (cfs): 4.30
Q Top (cfs): 1.04
Q Bottom (cfs): 5.33
Velocity Top (ft/s): 1.49
Velocity Bottom (ft/s): 2.25
Avg Velocity (ft/s): 1.87
Wave Velocity (ft/s): 2.80
DATA FOR FLOW PATH 3

Flow Path Name: Pipe Flow
FLOW PATH TRAVEL TIME (min): 0.6460
Flow Type: Pipe
Length (ft): 370
Top Elevation (ft): 121
Bottom Elevation (ft): 117
Contributing Area (acres): 8.86
Percent of Sub-Area (%): 85.2
Initial Pipe Diameter (in): 33
Calculated Pipe Diameter (in): 30
Used Pipe Diameter (in): 33
Manning's N: 0.013
Map Slope: 0.0108
Q for Flow Path (cfs): 30.69
Q Top (cfs): 5.33
Q Bottom (cfs): 36.02
Avg Velocity (ft/s): 7.14
Wave Velocity (ft/s): 9.55
Tc for frequency = 100.00: 5.687 Minutes
DATA FOR SUB AREA 1

SUB AREA TIME OF CONCENTRATION: 5.687 min. = 6 min.

SUB AREA INPUT DATA

Sub Area Name: Drainage Area 1
Total Area (ac): 10.4
Flood Zone: 3
Rainfall Zone: K
Storm Frequency (years): 100
Development Type: Residential
Soil Type: 2.00
Percent Impervious: 65
SUB AREA OUTPUT

Intensity (in/hr): 4.590
C Total: 0.926
Sum Q Segments (cfs): 44.20
Q Total (cfs): 44.20
Sum Percent Area (%): 100.0
Sum of Flow Path Travel Times (sec): 341.20
Time of Concentration (min): 5.687

DATA FOR FLOW PATH 1

Flow Path Name: Overland Flow
FLOW PATH TRAVEL TIME (min): 2.9235
Flow Type: Overland
Length (ft): 140
Top Elevation (ft): 128
Bottom Elevation (ft): 127
Contributing Area (acres): 0.3
Percent of Sub-Area (%): 2.9
Overland Type: Valley
Development Type: Residential
Map Slope: 0.0071
Effective Slope: 0.0071
Q for Flow Path (cfs): 1.27
Avg Velocity (ft/s): 0.80
Passed Scour Check: N/A
DATA FOR FLOW PATH 2

Flow Path Name: Street Flow
FLOW PATH TRAVEL TIME (min): 2.2584
Flow Type: Street
Length (ft): 400
Top Elevation (ft): 127
Bottom Elevation (ft): 124
Contributing Area (acres): 1.24
Percent of Sub-Area (%): 11.9
Street Width (ft): 32
Curb Height (in): 6
Map Slope: 0.0075
Q for Flow Path (cfs): 5.27
Q Top (cfs): 1.27
Q Bottom (cfs): 6.54
Velocity Top (ft/s): 1.57
Velocity Bottom (ft/s): 2.37
Avg Velocity (ft/s): 1.97
Wave Velocity (ft/s): 2.95
DATA FOR FLOW PATH 3

Flow Path Name: Pipe Flow
FLOW PATH TRAVEL TIME (min): 0.5048
Flow Type: Pipe
Length (ft): 370
Top Elevation (ft): 121
Bottom Elevation (ft): 117
Contributing Area (acres): 8.86
Percent of Sub-Area (%): 85.2
Initial Pipe Diameter (in): 33
Calculated Pipe Diameter (in): 33
Used Pipe Diameter (in): 33
Manning's N: 0.013
Map Slope: 0.0108
Q for Flow Path (cfs): 37.65
Q Top (cfs): 6.54
Q Bottom (cfs): 44.20
Avg Velocity (ft/s): 9.07
Wave Velocity (ft/s): 12.22

(Intentionally Blank)

VENTURA COUNTY WATERSHED PROTECTION DISTRICT
TIME OF CONCENTRATION
TC Program Version: 2.64.0.30
Project: Camarillo Springs Golf Course
Date: 8/22/2019 1:37:05 PM
Engineer: TJS
Consultant: ECG

Watershed Name: Camarillo Springs Golf Course - Developed Condition

---

Sub-Area Name: Drainage Area 2
Computing Tc for all rainfall frequencies for sub-area Drainage Area 2...

Tc for frequency = 10.00: 14.850 Minutes
DATA FOR SUB AREA 1

SUB AREA TIME OF CONCENTRATION: 14.850 min. = 15 min.

SUB AREA INPUT DATA

Sub Area Name: Drainage Area 2
Total Area (ac): 23
Flood Zone: 3
Rainfall Zone: K
Storm Frequency (years): 10
Development Type: Residential
Soil Type: 2.00
Percent Impervious: 59
SUB AREA OUTPUT

Intensity (in/hr): 2.044
C Total: 0.874
Sum Q Segments (cfs): 41.10
Q Total (cfs): 41.10
Sum Percent Area (%): 100.0
Sum of Flow Path Travel Times (sec): 891.00
Time of Concentration (min): 14.850

DATA FOR FLOW PATH 1

Flow Path Name: Overland Flow
FLOW PATH TRAVEL TIME (min): 7.5979
Flow Type: Overland
Length (ft): 184
Top Elevation (ft): 128
Bottom Elevation (ft): 127
Contributing Area (acres): 0.35
Percent of Sub-Area (%): 1.5
Overland Type: Valley
Development Type: Residential
Map Slope: 0.0054
Effective Slope: 0.0054
Q for Flow Path (cfs): 0.63
Avg Velocity (ft/s): 0.40
Passed Scour Check: N/A
DATA FOR FLOW PATH 2

Flow Path Name: Street Flow
FLOW PATH TRAVEL TIME (min): 0.9045
Flow Type: Street
Length (ft): 119
Top Elevation (ft): 127
Bottom Elevation (ft): 126
Contributing Area (acres): 0.23
Percent of Sub-Area (%): 1.0
Street Width (ft): 32
Curb Height (in): 6
Map Slope: 0.0084
Q for Flow Path (cfs): 0.41
Q Top (cfs): 0.63
Q Bottom (cfs): 1.04

Velocity Top (ft/s): 1.37
Velocity Bottom (ft/s): 1.55
Avg Velocity (ft/s): 1.46
Wave Velocity (ft/s): 2.19
DATA FOR FLOW PATH 3

Flow Path Name: Pipe Flow
FLOW PATH TRAVEL TIME (min): 6.3476
Flow Type: Pipe
Length (ft): 2215
Top Elevation (ft): 123
Bottom Elevation (ft): 109
Contributing Area (acres): 22.42
Percent of Sub-Area (%): 97.5
Initial Pipe Diameter (in): 42
Calculated Pipe Diameter (in): 33
Used Pipe Diameter (in): 42
Manning's N: 0.013
Map Slope: 0.0063
Q for Flow Path (cfs): 40.07
Q Top (cfs): 1.04
Q Bottom (cfs): 41.10
Avg Velocity (ft/s): 4.37
Wave Velocity (ft/s): 5.82
Tc for frequency = 25.00: 11.876 Minutes
DATA FOR SUB AREA 1

SUB AREA TIME OF CONCENTRATION: 11.876 min. = 12 min.

SUB AREA INPUT DATA

Sub Area Name: Drainage Area 2
Total Area (ac): 23
Flood Zone: 3
Rainfall Zone: K
Storm Frequency (years): 25
Development Type: Residential
Soil Type: 2.00
Percent Impervious: 59
SUB AREA OUTPUT

Intensity (in/hr): 2.534
C Total: 0.889
Sum Q Segments (cfs): 51.83
Q Total (cfs): 51.83
Sum Percent Area (%): 100.0
Sum of Flow Path Travel Times (sec): 712.56
Time of Concentration (min): 11.876

DATA FOR FLOW PATH 1

Flow Path Name: Overland Flow
FLOW PATH TRAVEL TIME (min): 5.9893
Flow Type: Overland
Length (ft): 184
Top Elevation (ft): 128
Bottom Elevation (ft): 127
Contributing Area (acres): 0.35
Percent of Sub-Area (%): 1.5
Overland Type: Valley
Development Type: Residential
Map Slope: 0.0054
Effective Slope: 0.0054
Q for Flow Path (cfs): 0.79
Avg Velocity (ft/s): 0.51
Passed Scour Check: N/A
DATA FOR FLOW PATH 2

Flow Path Name: Street Flow
FLOW PATH TRAVEL TIME (min): 0.8533
Flow Type: Street

Length (ft): 119
Top Elevation (ft): 127
Bottom Elevation (ft): 126
Contributing Area (acres): 0.23
Percent of Sub-Area (%): 1.0
Street Width (ft): 32
Curb Height (in): 6
Map Slope: 0.0084
Q for Flow Path (cfs): 0.52
Q Top (cfs): 0.79
Q Bottom (cfs): 1.31
Velocity Top (ft/s): 1.45
Velocity Bottom (ft/s): 1.65
Avg Velocity (ft/s): 1.55
Wave Velocity (ft/s): 2.32
DATA FOR FLOW PATH 3

Flow Path Name: Pipe Flow
FLOW PATH TRAVEL TIME (min): 5.0334
Flow Type: Pipe
Length (ft): 2215
Top Elevation (ft): 123
Bottom Elevation (ft): 109
Contributing Area (acres): 22.42
Percent of Sub-Area (%): 97.5
Initial Pipe Diameter (in): 42
Calculated Pipe Diameter (in): 36
Used Pipe Diameter (in): 42
Manning's N: 0.013
Map Slope: 0.0063
Q for Flow Path (cfs): 50.52
Q Top (cfs): 1.31
Q Bottom (cfs): 51.83
Avg Velocity (ft/s): 5.52
Wave Velocity (ft/s): 7.33
Tc for frequency = 50.00: 9.306 Minutes
DATA FOR SUB AREA 1

SUB AREA TIME OF CONCENTRATION: 9.306 min. = 9 min.

SUB AREA INPUT DATA

Sub Area Name: Drainage Area 2
Total Area (ac): 23
Flood Zone: 3
Rainfall Zone: K
Storm Frequency (years): 50
Development Type: Residential
Soil Type: 2.00
Percent Impervious: 59
SUB AREA OUTPUT

Intensity (in/hr): 3.333
C Total: 0.906
Sum Q Segments (cfs): 69.47
Q Total (cfs): 69.47
Sum Percent Area (%): 100.0
Sum of Flow Path Travel Times (sec): 558.34
Time of Concentration (min): 9.306

DATA FOR FLOW PATH 1

Flow Path Name: Overland Flow
FLOW PATH TRAVEL TIME (min): 5.1222
Flow Type: Overland
Length (ft): 184
Top Elevation (ft): 128
Bottom Elevation (ft): 127
Contributing Area (acres): 0.35
Percent of Sub-Area (%): 1.5
Overland Type: Valley

Development Type: Residential
Map Slope: 0.0054
Effective Slope: 0.0054
Q for Flow Path (cfs): 1.06
Avg Velocity (ft/s): 0.60
Passed Scour Check: N/A
DATA FOR FLOW PATH 2

Flow Path Name: Street Flow
FLOW PATH TRAVEL TIME (min): 0.7927
Flow Type: Street
Length (ft): 119
Top Elevation (ft): 127
Bottom Elevation (ft): 126
Contributing Area (acres): 0.23
Percent of Sub-Area (%): 1.0
Street Width (ft): 32
Curb Height (in): 6
Map Slope: 0.0084
Q for Flow Path (cfs): 0.69
Q Top (cfs): 1.06
Q Bottom (cfs): 1.75
Velocity Top (ft/s): 1.56
Velocity Bottom (ft/s): 1.77
Avg Velocity (ft/s): 1.67
Wave Velocity (ft/s): 2.50
DATA FOR FLOW PATH 3

Flow Path Name: Pipe Flow
FLOW PATH TRAVEL TIME (min): 3.3909
Flow Type: Pipe
Length (ft): 2215
Top Elevation (ft): 123
Bottom Elevation (ft): 109
Contributing Area (acres): 22.42
Percent of Sub-Area (%): 97.5
Initial Pipe Diameter (in): 42
Calculated Pipe Diameter (in): 42
Used Pipe Diameter (in): 42
Manning's N: 0.013
Map Slope: 0.0063
Q for Flow Path (cfs): 67.72
Q Top (cfs): 1.75
Q Bottom (cfs): 69.47
Avg Velocity (ft/s): 8.06
Wave Velocity (ft/s): 10.89
Tc for frequency = 100.00: 7.826 Minutes
DATA FOR SUB AREA 1

SUB AREA TIME OF CONCENTRATION: 7.826 min. = 8 min.

SUB AREA INPUT DATA

Sub Area Name: Drainage Area 2
Total Area (ac): 23
Flood Zone: 3
Rainfall Zone: K
Storm Frequency (years): 100
Development Type: Residential
Soil Type: 2.00
Percent Impervious: 59
SUB AREA OUTPUT

Intensity (in/hr): 3.953
C Total: 0.916
Sum Q Segments (cfs): 83.24
Q Total (cfs): 83.24
Sum Percent Area (%): 100.0
Sum of Flow Path Travel Times (sec): 469.55
Time of Concentration (min): 7.826

DATA FOR FLOW PATH 1

Flow Path Name: Overland Flow
FLOW PATH TRAVEL TIME (min): 3.8529
Flow Type: Overland
Length (ft): 184
Top Elevation (ft): 128
Bottom Elevation (ft): 127
Contributing Area (acres): 0.35
Percent of Sub-Area (%): 1.5
Overland Type: Valley
Development Type: Residential
Map Slope: 0.0054
Effective Slope: 0.0054
Q for Flow Path (cfs): 1.27
Avg Velocity (ft/s): 0.80
Passed Scour Check: N/A
DATA FOR FLOW PATH 2

Flow Path Name: Street Flow
FLOW PATH TRAVEL TIME (min): 0.7574
Flow Type: Street
Length (ft): 119
Top Elevation (ft): 127
Bottom Elevation (ft): 126
Contributing Area (acres): 0.23
Percent of Sub-Area (%): 1.0
Street Width (ft): 32
Curb Height (in): 6
Map Slope: 0.0084
Q for Flow Path (cfs): 0.83
Q Top (cfs): 1.27
Q Bottom (cfs): 2.10
Velocity Top (ft/s): 1.63
Velocity Bottom (ft/s): 1.86
Avg Velocity (ft/s): 1.75
Wave Velocity (ft/s): 2.62
DATA FOR FLOW PATH 3

Flow Path Name: Pipe Flow
FLOW PATH TRAVEL TIME (min): 3.2155
Flow Type: Pipe
Length (ft): 2215
Top Elevation (ft): 123
Bottom Elevation (ft): 109
Contributing Area (acres): 22.42
Percent of Sub-Area (%): 97.5
Initial Pipe Diameter (in): 42
Calculated Pipe Diameter (in): 48
Used Pipe Diameter (in): 48
Manning's N: 0.013
Map Slope: 0.0063
Q for Flow Path (cfs): 81.14
Q Top (cfs): 2.10
Q Bottom (cfs): 83.24
Avg Velocity (ft/s): 8.45
Wave Velocity (ft/s): 11.48

(Intentionally Blank)

Ventura County Watershed Protection District
Modified Rational Method Hydrology Program (VCRat v2.64)

Modified Rational Model Results Report

Job: 1 Project: Camarillo Springs Golf Course

Project Description

Camarillo Springs Golf Course Hydrology
Storm Event: 10-Year
Developed Condition Drainage Area - 1

VCRat version: 2.64.0.30
VCRain version: 201601
DOS EXE version: PC 2.64-201605
VCRain Curve Set: VCWPD 2016 Revised Curve Set
Curve A: CON3: Conejo Creek
Curve B: None
Curve C: None
Curve D: None

Ventura County Watershed Protection District
Modified Rational Method Hydrology Program (VCRat v2.64)

Job: 1 Project: Camarillo Springs Golf Course

Page: 2

Model Results

NODE ID	SOIL TYPE	RAIN ZONE	TC (MIN)	% IMP	AREA (AC)	FLOW (CFS)	ACCUMULATED DATA -- AREA (AC)	ACCUMULATED DATA -- FLOW (CFS)	ACCUMULATED DATA -- TIME (MIN)	ROUTING AFTER ACCUMULATION -- CHANNEL TYPE	LENGTH (FT)	SLOPE (FT/FT)	SIZE (FT)	H:V (Z)	N VALUES CHNL	N VALUES SIDES	VEL (FT/S)	DEPTH (FT)
1A	---	---	--	--	---	---	0	0	----	-------	----	-------	---	----	-----	-----	--	--
2A	020	A10	9	65	10	16	10	16	1154	-------	----	-------	---	----	-----	-----	--	--
3A	---	---	--	--	---	---	10	16	1154	-------	----	-------	---	----	-----	-----	--	--

Issue/Warning Messages

TYPE	ERR NO	PROCEDURE	LOCATION	MESSAGE

NO ISSUES OR WARNINGS DETECTED

HYDROGRAPH PRINTOUT AT: 2A

TOTAL AREA TO HYDROGRAPH: 10 acres
HYDROGRAPH PEAK: 16 cfs
TIME OF PEAK: 1154 minutes
HYDROGRAPH VOLUME: 2.06 acre-ft

TIME (min)	FLOW (cfs)	TIME (min)	FLOW (cfs)	TIME (min)	FLOW (cfs)	TIME (min)	FLOW (cfs)	TIME (min)	FLOW (cfs)
0	0.00	100	0.48	200	0.48	300	0.48	400	0.48
500	0.47	600	0.56	700	0.80	800	0.80	900	1.06
1000	1.50	1050	1.94	1100	2.57	1110	4.05	1120	4.97
1130	4.97	1131	4.98	1132	4.99	1133	4.95	1134	4.96
1135	4.97	1136	4.93	1137	4.94	1138	4.95	1139	4.96
1140	4.91	1141	5.02	1142	5.18	1143	5.23	1144	5.34
1145	5.78	1146	6.22	1147	6.66	1148	7.04	1149	8.88
1150	10.60	1151	12.27	1152	13.98	1153	15.65	1154	15.70
1155	15.32	1156	14.89	1157	14.52	1158	12.75	1159	10.87
1160	9.10	1161	7.31	1162	5.51	1163	5.07	1164	4.96
1165	4.69	1166	4.47	1167	4.20	1168	3.99	1169	3.72
1170	3.45	1171	3.17	1172	2.90	1173	2.69	1174	2.69
1175	2.63	1176	2.63	1177	2.58	1178	2.47	1179	2.43
1180	2.35	1181	2.31	1182	2.22	1183	2.18	1184	2.10
1185	2.06	1186	2.02	1187	2.06	1188	2.02	1189	1.98
1190	1.89	1191	1.85	1192	1.77	1193	1.73	1194	1.65
1195	1.61	1196	1.52	1197	1.48	1198	1.52	1199	1.52
1200	1.52	1201	1.52	1202	1.52	1203	1.52	1204	1.52
1205	1.52	1206	1.52	1207	1.48	1208	1.48	1209	1.48
1210	1.48	1211	1.48	1212	1.48	1213	1.48	1214	1.48
1215	1.48	1216	1.48	1217	1.48	1218	1.52	1219	1.52
1220	1.52	1221	1.52	1222	1.52	1223	1.52	1224	1.52
1225	1.44	1226	1.36	1227	1.24	1228	1.15	1229	1.11
1230	1.03	1231	0.95	1232	0.86	1233	0.78	1234	0.78
1235	0.82	1236	0.82	1237	0.82	1238	0.78	1239	0.78
1240	0.78	1241	0.82	1242	0.82	1243	0.82	1244	0.78
1245	0.78	1246	0.78	1247	0.82	1248	0.82	1249	0.82
1250	0.78	1251	0.78	1252	0.78	1253	0.78	1254	0.82
1255	0.82	1256	0.78	1257	0.78	1258	0.78	1259	0.78
1260	0.82	1261	0.82	1262	0.82	1263	0.78	1264	0.78
1265	0.78	1266	0.82	1267	0.82	1268	0.82	1269	0.78
1270	0.78	1271	0.78	1272	0.82	1273	0.82	1274	0.82
1275	0.78	1276	0.78	1277	0.78	1278	0.82	1279	0.82
1280	0.82	1281	0.78	1282	0.78	1283	0.78	1284	0.78
1285	0.82	1286	0.82	1287	0.78	1288	0.78	1289	0.78
1290	0.78	1291	0.82	1292	0.82	1293	0.82	1294	0.78
1295	0.78	1296	0.78	1297	0.78	1298	0.74	1299	0.70
1300	0.66	1310	0.44	1320	0.48	1330	0.48	1340	0.48
1350	0.48	1360	0.48	1370	0.48	1380	0.48	1390	0.48
1400	0.44	1420	0.48	1440	0.48	1460	0.00	1500	0.00

Ventura County Watershed Protection District
Modified Rational Method Hydrology Program (VCRat v2.64)

Job: 1 Project: Camarillo Springs Golf Course

Page: 3

Hydrograph Printouts

HYDROGRAPH PRINTOUT AT: 3A

TOTAL AREA TO HYDROGRAPH: 10 acres
HYDROGRAPH PEAK: 16 cfs
TIME OF PEAK: 1154 minutes
HYDROGRAPH VOLUME: 2.06 acre-ft

TIME (min)	FLOW (cfs)	TIME (min)	FLOW (cfs)	TIME (min)	FLOW (cfs)	TIME (min)	FLOW (cfs)	TIME (min)	FLOW (cfs)
0	0.00	100	0.48	200	0.48	300	0.48	400	0.48
500	0.47	600	0.56	700	0.80	800	0.80	900	1.06
1000	1.50	1050	1.94	1100	2.57	1110	4.05	1120	4.97
1130	4.97	1131	4.98	1132	4.99	1133	4.95	1134	4.96
1135	4.97	1136	4.93	1137	4.94	1138	4.95	1139	4.96
1140	4.91	1141	5.02	1142	5.18	1143	5.23	1144	5.34
1145	5.78	1146	6.22	1147	6.66	1148	7.04	1149	8.88
1150	10.60	1151	12.27	1152	13.98	1153	15.65	1154	15.70
1155	15.32	1156	14.89	1157	14.52	1158	12.75	1159	10.87
1160	9.10	1161	7.31	1162	5.51	1163	5.07	1164	4.96
1165	4.69	1166	4.47	1167	4.20	1168	3.99	1169	3.72
1170	3.45	1171	3.17	1172	2.90	1173	2.69	1174	2.69
1175	2.63	1176	2.63	1177	2.58	1178	2.47	1179	2.43
1180	2.35	1181	2.31	1182	2.22	1183	2.18	1184	2.10
1185	2.06	1186	2.02	1187	2.06	1188	2.02	1189	1.98
1190	1.89	1191	1.85	1192	1.77	1193	1.73	1194	1.65
1195	1.61	1196	1.52	1197	1.48	1198	1.52	1199	1.52
1200	1.52	1201	1.52	1202	1.52	1203	1.52	1204	1.52
1205	1.52	1206	1.52	1207	1.48	1208	1.48	1209	1.48
1210	1.48	1211	1.48	1212	1.48	1213	1.48	1214	1.48
1215	1.48	1216	1.48	1217	1.48	1218	1.52	1219	1.52
1220	1.52	1221	1.52	1222	1.52	1223	1.52	1224	1.52
1225	1.44	1226	1.36	1227	1.24	1228	1.15	1229	1.11
1230	1.03	1231	0.95	1232	0.86	1233	0.78	1234	0.78
1235	0.82	1236	0.82	1237	0.82	1238	0.78	1239	0.78
1240	0.78	1241	0.82	1242	0.82	1243	0.82	1244	0.78
1245	0.78	1246	0.78	1247	0.82	1248	0.82	1249	0.82
1250	0.78	1251	0.78	1252	0.78	1253	0.78	1254	0.82
1255	0.82	1256	0.78	1257	0.78	1258	0.78	1259	0.78
1260	0.82	1261	0.82	1262	0.82	1263	0.78	1264	0.78
1265	0.78	1266	0.82	1267	0.82	1268	0.82	1269	0.78
1270	0.78	1271	0.78	1272	0.82	1273	0.82	1274	0.82
1275	0.78	1276	0.78	1277	0.78	1278	0.82	1279	0.82

1280	0.82	1281	0.78	1282	0.78	1283	0.78	1284	0.78
1285	0.82	1286	0.82	1287	0.78	1288	0.78	1289	0.78
1290	0.78	1291	0.82	1292	0.82	1293	0.82	1294	0.78
1295	0.78	1296	0.78	1297	0.78	1298	0.74	1299	0.70
1300	0.66	1310	0.44	1320	0.48	1330	0.48	1340	0.48
1350	0.48	1360	0.48	1370	0.48	1380	0.48	1390	0.48
1400	0.44	1420	0.48	1440	0.48	1460	0.00	1500	0.00

VCRat Model Input

Model Lines

```
005     1  001A Header place holder
005     1  002A Header place holder
005     1  003A Header place holder
999
999
006     1  001A 010      099A97                                G1
006     1  002A 020065001009A97                              1
006     1  003A 010      099A97                              1  2
999
```

Ventura County Watershed Protection District
Modified Rational Method Hydrology Program (VCRat v2.64)

Modified Rational Model Results Report

Job: 1 Project: Camarillo Springs Golf Course

Project Description

Camarillo Springs Golf Course Hydrology
Storm Event: 25-Year
Developed Condition Drainage Area - 1

VCRat version: 2.64.0.30
VCRain version: 201601
DOS EXE version: PC 2.64-201605
VCRain Curve Set: VCWPD 2016 Revised Curve Set
Curve A: CON3: Conejo Creek
Curve B: None
Curve C: None
Curve D: None

Ventura County Watershed Protection District
Modified Rational Method Hydrology Program (VCRat v2.64)

Job: 1 Project: Camarillo Springs Golf Course

Page: 2

Model Results

SUBAREA DATA AND RESULTS							ACCUMULATED DATA			ROUTING AFTER ACCUMULATION								
NODE ID	SOIL TYPE	RAIN ZONE	TC (MIN)	% IMP	AREA (AC)	FLOW (CFS)	AREA (AC)	FLOW (CFS)	TIME (MIN)	CHANNEL TYPE	LENGTH (FT)	SLOPE (FT/FT)	SIZE (FT)	H:V (Z)	N VALUES CHNL	N VALUES SIDES	VEL (FT/S)	DEPTH (FT)
1A	---	---	--	--	---	---	0	0	----	-------	----	-------	---	----	-----	-----	--	--
2A	020	A25	8	65	10	20	10	20	1153	-------	----	-------	---	----	-----	-----	--	--
3A	---	---	--	--	---	---	10	20	1153	-------	----	-------	---	----	-----	-----	--	--

Issue/Warning Messages

TYPE	ERR NO	PROCEDURE	LOCATION	MESSAGE

NO ISSUES OR WARNINGS DETECTED

HYDROGRAPH PRINTOUT AT: 2A

TOTAL AREA TO HYDROGRAPH: 10 acres
HYDROGRAPH PEAK: 20 cfs
TIME OF PEAK: 1153 minutes
HYDROGRAPH VOLUME: 2.53 acre-ft

TIME (min)	FLOW (cfs)	TIME (min)	FLOW (cfs)	TIME (min)	FLOW (cfs)	TIME (min)	FLOW (cfs)	TIME (min)	FLOW (cfs)
0	0.00	100	0.59	200	0.59	300	0.59	400	0.59
500	0.59	600	0.68	700	0.97	800	0.97	900	1.28
1000	1.82	1050	2.36	1100	3.29	1110	5.07	1120	6.20
1130	6.20	1131	6.18	1132	6.16	1133	6.15	1134	6.19
1135	6.17	1136	6.15	1137	6.13	1138	6.12	1139	6.12
1140	6.12	1141	6.30	1142	6.36	1143	6.55	1144	6.67
1145	7.29	1146	7.90	1147	8.44	1148	9.05	1149	11.35
1150	13.70	1151	16.00	1152	18.31	1153	20.19	1154	20.19
1155	19.76	1156	19.22	1157	16.73	1158	14.24	1159	11.77
1160	9.35	1161	6.92	1162	6.30	1163	6.18	1164	6.18
1165	5.81	1166	5.50	1167	5.19	1168	4.83	1169	4.46
1170	4.09	1171	3.79	1172	3.36	1173	3.42	1174	3.36
1175	3.36	1176	3.42	1177	3.24	1178	3.18	1179	3.06
1180	2.94	1181	2.82	1182	2.69	1183	2.57	1184	2.45
1185	2.45	1186	2.45	1187	2.45	1188	2.45	1189	2.36
1190	2.32	1191	2.22	1192	2.13	1193	2.08	1194	1.99
1195	1.90	1196	1.81	1197	1.81	1198	1.81	1199	1.81
1200	1.81	1201	1.81	1202	1.81	1203	1.81	1204	1.85
1205	1.85	1206	1.85	1207	1.85	1208	1.81	1209	1.81
1210	1.81	1211	1.81	1212	1.81	1213	1.81	1214	1.81
1215	1.81	1216	1.85	1217	1.85	1218	1.85	1219	1.81
1220	1.81	1221	1.81	1222	1.81	1223	1.81	1224	1.81
1225	1.71	1226	1.57	1227	1.53	1228	1.44	1229	1.30
1230	1.20	1231	1.07	1232	0.97	1233	0.97	1234	0.97
1235	0.97	1236	0.97	1237	0.97	1238	0.97	1239	0.97
1240	0.97	1241	0.97	1242	0.97	1243	0.97	1244	0.97
1245	0.97	1246	0.97	1247	1.02	1248	0.97	1249	0.97
1250	0.97	1251	0.97	1252	0.97	1253	0.97	1254	0.97
1255	0.97	1256	0.97	1257	0.97	1258	0.97	1259	0.97
1260	0.97	1261	0.97	1262	0.97	1263	0.97	1264	0.97
1265	0.97	1266	0.97	1267	0.97	1268	0.97	1269	0.97
1270	0.97	1271	0.97	1272	0.97	1273	0.97	1274	1.02
1275	0.97	1276	0.97	1277	0.97	1278	0.97	1279	0.97

1280	0.97	1281	0.97	1282	0.97	1283	0.97	1284	0.97
1285	0.97	1286	0.97	1287	0.97	1288	0.97	1289	0.97
1290	0.97	1291	0.97	1292	0.97	1293	1.02	1294	0.97
1295	0.97	1296	0.97	1297	0.93	1298	0.88	1299	0.83
1300	0.79	1310	0.59	1320	0.56	1330	0.59	1340	0.59
1350	0.59	1360	0.59	1370	0.56	1380	0.59	1390	0.59
1400	0.59	1420	0.57	1440	0.59	1460	0.00	1500	0.00

Ventura County Watershed Protection District
Modified Rational Method Hydrology Program (VCRat v2.64)

Job: 1 Project: Camarillo Springs Golf Course

Hydrograph Printouts

HYDROGRAPH PRINTOUT AT: 3A

TOTAL AREA TO HYDROGRAPH: 10 acres
HYDROGRAPH PEAK: 20 cfs
TIME OF PEAK: 1153 minutes
HYDROGRAPH VOLUME: 2.53 acre-ft

TIME (min)	FLOW (cfs)	TIME (min)	FLOW (cfs)	TIME (min)	FLOW (cfs)	TIME (min)	FLOW (cfs)	TIME (min)	FLOW (cfs)
0	0.00	100	0.59	200	0.59	300	0.59	400	0.59
500	0.59	600	0.68	700	0.97	800	0.97	900	1.28
1000	1.82	1050	2.36	1100	3.29	1110	5.07	1120	6.20
1130	6.20	1131	6.18	1132	6.16	1133	6.15	1134	6.19
1135	6.17	1136	6.15	1137	6.13	1138	6.12	1139	6.12
1140	6.12	1141	6.30	1142	6.36	1143	6.55	1144	6.67
1145	7.29	1146	7.90	1147	8.44	1148	9.05	1149	11.35
1150	13.70	1151	16.00	1152	18.31	1153	20.19	1154	20.19
1155	19.76	1156	19.22	1157	16.73	1158	14.24	1159	11.77
1160	9.35	1161	6.92	1162	6.30	1163	6.18	1164	6.18
1165	5.81	1166	5.50	1167	5.19	1168	4.83	1169	4.46
1170	4.09	1171	3.79	1172	3.36	1173	3.42	1174	3.36
1175	3.36	1176	3.42	1177	3.24	1178	3.18	1179	3.06
1180	2.94	1181	2.82	1182	2.69	1183	2.57	1184	2.45
1185	2.45	1186	2.45	1187	2.45	1188	2.45	1189	2.36
1190	2.32	1191	2.22	1192	2.13	1193	2.08	1194	1.99
1195	1.90	1196	1.81	1197	1.81	1198	1.81	1199	1.81
1200	1.81	1201	1.81	1202	1.81	1203	1.81	1204	1.85
1205	1.85	1206	1.85	1207	1.85	1208	1.81	1209	1.81
1210	1.81	1211	1.81	1212	1.81	1213	1.81	1214	1.81
1215	1.81	1216	1.85	1217	1.85	1218	1.85	1219	1.81

1220	1.81	1221	1.81	1222	1.81	1223	1.81	1224	1.81
1225	1.71	1226	1.57	1227	1.53	1228	1.44	1229	1.30
1230	1.20	1231	1.07	1232	0.97	1233	0.97	1234	0.97
1235	0.97	1236	0.97	1237	0.97	1238	0.97	1239	0.97
1240	0.97	1241	0.97	1242	0.97	1243	0.97	1244	0.97
1245	0.97	1246	0.97	1247	1.02	1248	0.97	1249	0.97
1250	0.97	1251	0.97	1252	0.97	1253	0.97	1254	0.97
1255	0.97	1256	0.97	1257	0.97	1258	0.97	1259	0.97
1260	0.97	1261	0.97	1262	0.97	1263	0.97	1264	0.97
1265	0.97	1266	0.97	1267	0.97	1268	0.97	1269	0.97
1270	0.97	1271	0.97	1272	0.97	1273	0.97	1274	1.02
1275	0.97	1276	0.97	1277	0.97	1278	0.97	1279	0.97
1280	0.97	1281	0.97	1282	0.97	1283	0.97	1284	0.97
1285	0.97	1286	0.97	1287	0.97	1288	0.97	1289	0.97
1290	0.97	1291	0.97	1292	0.97	1293	1.02	1294	0.97
1295	0.97	1296	0.97	1297	0.93	1298	0.88	1299	0.83
1300	0.79	1310	0.59	1320	0.56	1330	0.59	1340	0.59
1350	0.59	1360	0.59	1370	0.56	1380	0.59	1390	0.59
1400	0.59	1420	0.57	1440	0.59	1460	0.00	1500	0.00

♠ Ventura County Watershed Protection District
Modified Rational Method Hydrology Program (VCRat v2.64)

Job: 1 Project: Camarillo Springs Golf Course
Page: 4

VCRat Model Input

Model Lines

```
005     1  001A Header place holder
005     1  002A Header place holder
005     1  003A Header place holder
999
999
006     1  001A 010      099A97                              G1
006     1  002A 020065001008A97                            1
006     1  003A 010      099A97                              1  2
999
```

Ventura County Watershed Protection District
Modified Rational Method Hydrology Program (VCRat v2.64)

Modified Rational Model Results Report

Job: 1 Project: Camarillo Springs Golf Course

Project Description

Camarillo Springs Golf Course Hydrology
Storm Event: 50-Year
Developed Condition Drainage Area - 1

VCRat version: 2.64.0.30
VCRain version: 201601
DOS EXE version: PC 2.64-201605
VCRain Curve Set: VCWPD 2016 Revised Curve Set
Curve A: CON3: Conejo Creek
Curve B: None
Curve C: None
Curve D: None

Ventura County Watershed Protection District
Modified Rational Method Hydrology Program (VCRat v2.64)

Job: 1 Project: Camarillo Springs Golf Course

Page: 2

Model Results

NODE ID	SOIL TYPE	RAIN ZONE	TC (MIN)	% IMP	AREA (AC)	FLOW (CFS)	ACCUMULATED AREA (AC)	ACCUMULATED FLOW (CFS)	ACCUMULATED TIME (MIN)	CHANNEL TYPE	LENGTH (FT)	SLOPE (FT/FT)	SIZE (FT)	H:V (Z)	N VALUES CHNL	N VALUES SIDES	VEL (FT/S)	DEPTH (FT)
1A	---	---	--	--	---	---	0	0	----	-------	----	-------	---	----	-----	-----	--	--
2A	020	A50	7	65	10	25	10	25	1153	-------	----	-------	---	----	-----	-----	--	--
3A	---	---	--	--	---	---	10	25	1153	-------	----	-------	---	----	-----	-----	--	--

Issue/Warning Messages

TYPE	ERR NO	PROCEDURE	LOCATION	MESSAGE

NO ISSUES OR WARNINGS DETECTED

HYDROGRAPH PRINTOUT AT: 2A

TOTAL AREA TO HYDROGRAPH: 10 acres
HYDROGRAPH PEAK: 25 cfs
TIME OF PEAK: 1153 minutes
HYDROGRAPH VOLUME: 2.88 acre-ft

TIME (min)	FLOW (cfs)	TIME (min)	FLOW (cfs)	TIME (min)	FLOW (cfs)	TIME (min)	FLOW (cfs)	TIME (min)	FLOW (cfs)
0	0.00	100	0.67	200	0.66	300	0.67	400	0.66
500	0.67	600	0.77	700	1.10	800	1.10	900	1.45
1000	2.06	1050	2.73	1100	3.81	1110	5.86	1120	7.14
1130	7.09	1131	7.08	1132	7.07	1133	7.07	1134	7.06
1135	7.05	1136	7.05	1137	7.04	1138	7.04	1139	7.04
1140	7.04	1141	7.25	1142	7.39	1143	7.60	1144	7.81
1145	8.50	1146	9.27	1147	10.03	1148	10.58	1149	13.61
1150	16.59	1151	19.57	1152	22.08	1153	24.52	1154	24.52
1155	23.89	1156	20.69	1157	17.49	1158	14.30	1159	11.13
1160	8.02	1161	7.25	1162	7.11	1163	7.11	1164	7.11
1165	6.69	1166	6.26	1167	5.70	1168	5.28	1169	4.86
1170	4.37	1171	3.96	1172	3.96	1173	3.96	1174	3.96
1175	3.96	1176	3.96	1177	3.82	1178	3.68	1179	3.47
1180	3.33	1181	3.19	1182	3.05	1183	2.84	1184	2.91
1185	2.84	1186	2.91	1187	2.84	1188	2.91	1189	2.70
1190	2.63	1191	2.43	1192	2.38	1193	2.22	1194	2.17
1195	2.06	1196	2.06	1197	2.06	1198	2.06	1199	2.06
1200	2.06	1201	2.06	1202	2.01	1203	2.06	1204	2.06
1205	2.06	1206	2.06	1207	2.06	1208	2.06	1209	2.06
1210	2.06	1211	2.06	1212	2.06	1213	2.06	1214	2.06
1215	2.06	1216	2.06	1217	2.06	1218	2.01	1219	2.06
1220	2.06	1221	2.06	1222	2.06	1223	2.06	1224	2.06
1225	1.96	1226	1.80	1227	1.64	1228	1.53	1229	1.38
1230	1.27	1231	1.11	1232	1.11	1233	1.11	1234	1.11
1235	1.11	1236	1.11	1237	1.11	1238	1.11	1239	1.11
1240	1.06	1241	1.06	1242	1.06	1243	1.06	1244	1.06
1245	1.06	1246	1.06	1247	1.11	1248	1.11	1249	1.11
1250	1.11	1251	1.11	1252	1.11	1253	1.11	1254	1.11
1255	1.11	1256	1.11	1257	1.11	1258	1.11	1259	1.11
1260	1.11	1261	1.11	1262	1.11	1263	1.11	1264	1.11
1265	1.11	1266	1.11	1267	1.11	1268	1.11	1269	1.11
1270	1.11	1271	1.11	1272	1.11	1273	1.11	1274	1.11
1275	1.11	1276	1.11	1277	1.11	1278	1.11	1279	1.11
1280	1.11	1281	1.11	1282	1.11	1283	1.11	1284	1.11
1285	1.11	1286	1.11	1287	1.11	1288	1.11	1289	1.11
1290	1.11	1291	1.06	1292	1.06	1293	1.06	1294	1.06
1295	1.06	1296	1.06	1297	1.01	1298	1.01	1299	0.95
1300	0.90	1310	0.67	1320	0.63	1330	0.67	1340	0.67
1350	0.67	1360	0.67	1370	0.67	1380	0.67	1390	0.67
1400	0.67	1420	0.67	1440	0.67	1460	0.00	1500	0.00

Ventura County Watershed Protection District
Modified Rational Method Hydrology Program (VCRat v2.64)

Job: 1 Project: Camarillo Springs Golf Course

Page: 3

Hydrograph Printouts

HYDROGRAPH PRINTOUT AT: 3A

TOTAL AREA TO HYDROGRAPH: 10 acres
HYDROGRAPH PEAK: 25 cfs
TIME OF PEAK: 1153 minutes
HYDROGRAPH VOLUME: 2.88 acre-ft

TIME (min)	FLOW (cfs)	TIME (min)	FLOW (cfs)	TIME (min)	FLOW (cfs)	TIME (min)	FLOW (cfs)	TIME (min)	FLOW (cfs)
0	0.00	100	0.67	200	0.66	300	0.67	400	0.66
500	0.67	600	0.77	700	1.10	800	1.10	900	1.45
1000	2.06	1050	2.73	1100	3.81	1110	5.86	1120	7.14
1130	7.09	1131	7.08	1132	7.07	1133	7.07	1134	7.06
1135	7.05	1136	7.05	1137	7.04	1138	7.04	1139	7.04
1140	7.04	1141	7.25	1142	7.39	1143	7.60	1144	7.81
1145	8.50	1146	9.27	1147	10.03	1148	10.58	1149	13.61
1150	16.59	1151	19.57	1152	22.08	1153	24.52	1154	24.52
1155	23.89	1156	20.69	1157	17.49	1158	14.30	1159	11.13
1160	8.02	1161	7.25	1162	7.11	1163	7.11	1164	7.11
1165	6.69	1166	6.26	1167	5.70	1168	5.28	1169	4.86
1170	4.37	1171	3.96	1172	3.96	1173	3.96	1174	3.96
1175	3.96	1176	3.96	1177	3.82	1178	3.68	1179	3.47
1180	3.33	1181	3.19	1182	3.05	1183	2.84	1184	2.91
1185	2.84	1186	2.91	1187	2.84	1188	2.91	1189	2.70
1190	2.63	1191	2.43	1192	2.38	1193	2.22	1194	2.17
1195	2.06	1196	2.06	1197	2.06	1198	2.06	1199	2.06
1200	2.06	1201	2.06	1202	2.01	1203	2.06	1204	2.06
1205	2.06	1206	2.06	1207	2.06	1208	2.06	1209	2.06
1210	2.06	1211	2.06	1212	2.06	1213	2.06	1214	2.06
1215	2.06	1216	2.06	1217	2.06	1218	2.01	1219	2.06
1220	2.06	1221	2.06	1222	2.06	1223	2.06	1224	2.06
1225	1.96	1226	1.80	1227	1.64	1228	1.53	1229	1.38
1230	1.27	1231	1.11	1232	1.11	1233	1.11	1234	1.11
1235	1.11	1236	1.11	1237	1.11	1238	1.11	1239	1.11
1240	1.06	1241	1.06	1242	1.06	1243	1.06	1244	1.06
1245	1.06	1246	1.06	1247	1.11	1248	1.11	1249	1.11
1250	1.11	1251	1.11	1252	1.11	1253	1.11	1254	1.11
1255	1.11	1256	1.11	1257	1.11	1258	1.11	1259	1.11
1260	1.11	1261	1.11	1262	1.11	1263	1.11	1264	1.11
1265	1.11	1266	1.11	1267	1.11	1268	1.11	1269	1.11
1270	1.11	1271	1.11	1272	1.11	1273	1.11	1274	1.11
1275	1.11	1276	1.11	1277	1.11	1278	1.11	1279	1.11

1280	1.11	1281	1.11	1282	1.11	1283	1.11	1284	1.11
1285	1.11	1286	1.11	1287	1.11	1288	1.11	1289	1.11
1290	1.11	1291	1.06	1292	1.06	1293	1.06	1294	1.06
1295	1.06	1296	1.06	1297	1.01	1298	1.01	1299	0.95
1300	0.90	1310	0.67	1320	0.63	1330	0.67	1340	0.67
1350	0.67	1360	0.67	1370	0.67	1380	0.67	1390	0.67
1400	0.67	1420	0.67	1440	0.67	1460	0.00	1500	0.00

Ventura County Watershed Protection District
Modified Rational Method Hydrology Program (VCRat v2.64)

Job: 1 Project: Camarillo Springs Golf Course

VCRat Model Input

Model Lines

```
005     1  001A Header place holder
005     1  002A Header place holder
005     1  003A Header place holder
999
999
006     1  001A 010      099A97                                G1
006     1  002A 020065001007A97                              1
006     1  003A 010      099A97                              1  2
999
```

Ventura County Watershed Protection District
Modified Rational Method Hydrology Program (VCRat v2.64)

Modified Rational Model Results Report

Job: 1 Project: Camarillo Springs Golf Course

Project Description

Camarillo Springs Golf Course Hydrology
Storm Event: 100-Year
Developed Condition Drainage Area - 1

VCRat version: 2.64.0.30
VCRain version: 201601
DOS EXE version: PC 2.64-201605
VCRain Curve Set: VCWPD 2016 Revised Curve Set
Curve A: CON3: Conejo Creek
Curve B: None
Curve C: None
Curve D: None

Ventura County Watershed Protection District
Modified Rational Method Hydrology Program (VCRat v2.64)

Job: 1 Project: Camarillo Springs Golf Course

Page: 2

Model Results

SUBAREA DATA AND RESULTS							ACCUMULATED DATA			ROUTING AFTER ACCUMULATION								
NODE ID	SOIL TYPE	RAIN ZONE	TC (MIN)	% IMP	AREA (AC)	FLOW (CFS)	AREA (AC)	FLOW (CFS)	TIME (MIN)	CHANNEL TYPE	LENGTH (FT)	SLOPE (FT/FT)	SIZE (FT)	H:V (Z)	N VALUES CHNL	N VALUES SIDES	VEL (FT/S)	DEPTH (FT)
1A	---	---	--	--	---	---	0	0	----	-------	----	-------	---	----	-----	-----	--	--
2A	020	A100	6	65	10	30	10	30	1154	-------	----	-------	---	----	-----	-----	--	--
3A	---	---	--	--	---	---	10	30	1154	-------	----	-------	---	----	-----	-----	--	--

Issue/Warning Messages

TYPE	ERR NO	PROCEDURE	LOCATION	MESSAGE

NO ISSUES OR WARNINGS DETECTED

HYDROGRAPH PRINTOUT AT: 2A

TOTAL AREA TO HYDROGRAPH: 10 acres
HYDROGRAPH PEAK: 30 cfs
TIME OF PEAK: 1153 minutes
HYDROGRAPH VOLUME: 3.25 acre-ft

TIME (min)	FLOW (cfs)	TIME (min)	FLOW (cfs)	TIME (min)	FLOW (cfs)	TIME (min)	FLOW (cfs)	TIME (min)	FLOW (cfs)
0	0.00	100	0.75	200	0.75	300	0.75	400	0.75
500	0.75	600	0.87	700	1.24	800	1.24	900	1.63
1000	2.32	1050	3.15	1100	4.37	1110	6.65	1120	8.07
1130	8.07	1131	8.06	1132	8.05	1133	8.04	1134	8.03
1135	8.03	1136	8.02	1137	8.02	1138	8.02	1139	8.02
1140	8.02	1141	8.26	1142	8.50	1143	8.67	1144	8.91
1145	9.88	1146	10.84	1147	11.57	1148	12.29	1149	16.32
1150	20.21	1151	23.46	1152	26.72	1153	29.91	1154	29.91
1155	25.91	1156	21.76	1157	17.54	1158	13.34	1159	9.23
1160	8.26	1161	8.02	1162	8.02	1163	8.10	1164	8.10
1165	7.45	1166	6.88	1167	6.30	1168	5.72	1169	5.07
1170	4.50	1171	4.58	1172	4.50	1173	4.50	1174	4.50
1175	4.50	1176	4.50	1177	4.26	1178	4.18	1179	3.93
1180	3.69	1181	3.53	1182	3.28	1183	3.36	1184	3.28
1185	3.36	1186	3.36	1187	3.28	1188	3.36	1189	3.12
1190	2.96	1191	2.80	1192	2.63	1193	2.47	1194	2.28
1195	2.35	1196	2.35	1197	2.28	1198	2.28	1199	2.28
1200	2.35	1201	2.28	1202	2.28	1203	2.28	1204	2.35
1205	2.35	1206	2.28	1207	2.28	1208	2.35	1209	2.35
1210	2.28	1211	2.28	1212	2.35	1213	2.35	1214	2.28
1215	2.28	1216	2.35	1217	2.35	1218	2.28	1219	2.28
1220	2.35	1221	2.35	1222	2.28	1223	2.28	1224	2.35
1225	2.16	1226	1.91	1227	1.79	1228	1.61	1229	1.42
1230	1.23	1231	1.24	1232	1.23	1233	1.23	1234	1.23
1235	1.30	1236	1.23	1237	1.23	1238	1.30	1239	1.23
1240	1.23	1241	1.23	1242	1.23	1243	1.23	1244	1.23
1245	1.23	1246	1.23	1247	1.23	1248	1.23	1249	1.23
1250	1.23	1251	1.23	1252	1.30	1253	1.23	1254	1.23
1255	1.30	1256	1.23	1257	1.23	1258	1.23	1259	1.23
1260	1.23	1261	1.23	1262	1.23	1263	1.23	1264	1.23
1265	1.23	1266	1.30	1267	1.23	1268	1.23	1269	1.30
1270	1.23	1271	1.23	1272	1.23	1273	1.23	1274	1.23
1275	1.23	1276	1.23	1277	1.23	1278	1.24	1279	1.23

1280	1.30	1281	1.23	1282	1.23	1283	1.30	1284	1.23
1285	1.23	1286	1.23	1287	1.23	1288	1.24	1289	1.23
1290	1.23	1291	1.23	1292	1.23	1293	1.23	1294	1.23
1295	1.23	1296	1.23	1297	1.17	1298	1.05	1299	0.99
1300	0.93	1310	0.78	1320	0.74	1330	0.74	1340	0.74
1350	0.78	1360	0.74	1370	0.74	1380	0.74	1390	0.78
1400	0.74	1420	0.74	1440	0.76	1460	0.00	1500	0.00

Ventura County Watershed Protection District
Modified Rational Method Hydrology Program (VCRat v2.64)

Job: 1 Project: Camarillo Springs Golf Course

Page: 3

Hydrograph Printouts

HYDROGRAPH PRINTOUT AT: 3A

TOTAL AREA TO HYDROGRAPH: 10 acres
HYDROGRAPH PEAK: 30 cfs
TIME OF PEAK: 1153 minutes
HYDROGRAPH VOLUME: 3.25 acre-ft

TIME (min)	FLOW (cfs)	TIME (min)	FLOW (cfs)	TIME (min)	FLOW (cfs)	TIME (min)	FLOW (cfs)	TIME (min)	FLOW (cfs)
0	0.00	100	0.75	200	0.75	300	0.75	400	0.75
500	0.75	600	0.87	700	1.24	800	1.24	900	1.63
1000	2.32	1050	3.15	1100	4.37	1110	6.65	1120	8.07
1130	8.07	1131	8.06	1132	8.05	1133	8.04	1134	8.03
1135	8.03	1136	8.02	1137	8.02	1138	8.02	1139	8.02
1140	8.02	1141	8.26	1142	8.50	1143	8.67	1144	8.91
1145	9.88	1146	10.84	1147	11.57	1148	12.29	1149	16.32
1150	20.21	1151	23.46	1152	26.72	1153	29.91	1154	29.91
1155	25.91	1156	21.76	1157	17.54	1158	13.34	1159	9.23
1160	8.26	1161	8.02	1162	8.02	1163	8.10	1164	8.10
1165	7.45	1166	6.88	1167	6.30	1168	5.72	1169	5.07
1170	4.50	1171	4.58	1172	4.50	1173	4.50	1174	4.50
1175	4.50	1176	4.50	1177	4.26	1178	4.18	1179	3.93
1180	3.69	1181	3.53	1182	3.28	1183	3.36	1184	3.28
1185	3.36	1186	3.36	1187	3.28	1188	3.36	1189	3.12
1190	2.96	1191	2.80	1192	2.63	1193	2.47	1194	2.28
1195	2.35	1196	2.35	1197	2.28	1198	2.28	1199	2.28
1200	2.35	1201	2.28	1202	2.28	1203	2.28	1204	2.35
1205	2.35	1206	2.28	1207	2.28	1208	2.35	1209	2.35
1210	2.28	1211	2.28	1212	2.35	1213	2.35	1214	2.28
1215	2.28	1216	2.35	1217	2.35	1218	2.28	1219	2.28

1220	2.35	1221	2.35	1222	2.28	1223	2.28	1224	2.35
1225	2.16	1226	1.91	1227	1.79	1228	1.61	1229	1.42
1230	1.23	1231	1.24	1232	1.23	1233	1.23	1234	1.23
1235	1.30	1236	1.23	1237	1.23	1238	1.30	1239	1.23
1240	1.23	1241	1.23	1242	1.23	1243	1.23	1244	1.23
1245	1.23	1246	1.23	1247	1.23	1248	1.23	1249	1.23
1250	1.23	1251	1.23	1252	1.30	1253	1.23	1254	1.23
1255	1.30	1256	1.23	1257	1.23	1258	1.23	1259	1.23
1260	1.23	1261	1.23	1262	1.23	1263	1.23	1264	1.23
1265	1.23	1266	1.30	1267	1.23	1268	1.23	1269	1.30
1270	1.23	1271	1.23	1272	1.23	1273	1.23	1274	1.23
1275	1.23	1276	1.23	1277	1.23	1278	1.24	1279	1.23
1280	1.30	1281	1.23	1282	1.23	1283	1.30	1284	1.23
1285	1.23	1286	1.23	1287	1.23	1288	1.24	1289	1.23
1290	1.23	1291	1.23	1292	1.23	1293	1.23	1294	1.23
1295	1.23	1296	1.23	1297	1.17	1298	1.05	1299	0.99
1300	0.93	1310	0.78	1320	0.74	1330	0.74	1340	0.74
1350	0.78	1360	0.74	1370	0.74	1380	0.74	1390	0.78
1400	0.74	1420	0.74	1440	0.76	1460	0.00	1500	0.00

Ventura County Watershed Protection District
Modified Rational Method Hydrology Program (VCRat v2.64)

Job: 1 Project: Camarillo Springs Golf Course

Page: 4

VCRat Model Input

Model Lines

```
005     1  001A Header place holder
005     1  002A Header place holder
005     1  003A Header place holder
999
999
006     1  001A 010      099A97                              G1
006     1  002A 020065001006A97                            1
006     1  003A 010      099A97                              1  2
999
```

(Intentionally Blank)

Ventura County Watershed Protection District
Modified Rational Method Hydrology Program (VCRat v2.64)

Modified Rational Model Results Report

Job: 1 Project: Camarillo Springs Golf Course

Project Description

Camarillo Springs Golf Course Hydrology
Storm Event: 10-Year
Developed Condition Drainage Area - 2

VCRat version: 2.64.0.30
VCRain version: 201601
DOS EXE version: PC 2.64-201605
VCRain Curve Set: VCWPD 2016 Revised Curve Set
Curve A: CON3: Conejo Creek
Curve B: None
Curve C: None
Curve D: None

Ventura County Watershed Protection District
Modified Rational Method Hydrology Program (VCRat v2.64)

Job: 1 Project: Camarillo Springs Golf Course

Page: 2

Model Results

NODE ID	SOIL TYPE	RAIN ZONE	TC (MIN)	% IMP	AREA (AC)	FLOW (CFS)	ACCUMULATED DATA -- AREA (AC)	ACCUMULATED DATA -- FLOW (CFS)	ACCUMULATED DATA -- TIME (MIN)	ROUTING AFTER ACCUMULATION -- CHANNEL TYPE	LENGTH (FT)	SLOPE (FT/FT)	SIZE (FT)	H:V (Z)	N VALUES CHNL	N VALUES SIDES	VEL (FT/S)	DEPTH (FT)
1A	---	---	--	--	---	---	0	0	----	-------	----	-------	---	----	-----	-----	--	--
2A	020	A10	15	59	23	26	23	26	1155	-------	----	-------	---	----	-----	-----	--	--
3A	---	---	--	--	---	---	23	26	1155	-------	----	-------	---	----	-----	-----	--	--

Issue/Warning Messages

TYPE	ERR NO	PROCEDURE	LOCATION	MESSAGE

NO ISSUES OR WARNINGS DETECTED

HYDROGRAPH PRINTOUT AT: 2A

TOTAL AREA TO HYDROGRAPH: 23 acres
HYDROGRAPH PEAK: 26 cfs
TIME OF PEAK: 1155 minutes
HYDROGRAPH VOLUME: 4.37 acre-ft

TIME (min)	FLOW (cfs)	TIME (min)	FLOW (cfs)	TIME (min)	FLOW (cfs)	TIME (min)	FLOW (cfs)	TIME (min)	FLOW (cfs)
0	0.00	100	1.00	200	1.00	300	1.00	400	1.00
500	0.99	600	1.16	700	1.67	800	1.67	900	2.20
1000	3.13	1050	4.05	1100	5.39	1110	7.58	1120	10.06
1130	10.75	1131	10.76	1132	10.77	1133	10.72	1134	10.73
1135	10.75	1136	10.69	1137	10.70	1138	10.72	1139	10.73
1140	10.67	1141	10.83	1142	10.99	1143	11.08	1144	11.24
1145	11.77	1146	12.35	1147	12.94	1148	13.53	1149	15.96
1150	18.42	1151	20.88	1152	23.25	1153	25.62	1154	26.19
1155	26.34	1156	26.19	1157	26.05	1158	25.98	1159	25.76
1160	25.26	1161	24.69	1162	24.11	1163	23.61	1164	21.17
1165	18.35	1166	15.67	1167	12.87	1168	10.09	1169	9.15
1170	8.71	1171	8.35	1172	7.99	1173	7.62	1174	7.33
1175	6.97	1176	6.61	1177	6.17	1178	5.66	1179	5.30
1180	5.16	1181	5.05	1182	4.95	1183	4.90	1184	4.80
1185	4.74	1186	4.64	1187	4.59	1188	4.49	1189	4.33
1190	4.18	1191	4.02	1192	3.92	1193	3.87	1194	3.76
1195	3.71	1196	3.61	1197	3.56	1198	3.51	1199	3.45
1200	3.35	1201	3.30	1202	3.20	1203	3.15	1204	3.15
1205	3.15	1206	3.15	1207	3.15	1208	3.15	1209	3.15
1210	3.15	1211	3.15	1212	3.15	1213	3.09	1214	3.09
1215	3.09	1216	3.09	1217	3.09	1218	3.15	1219	3.15
1220	3.15	1221	3.15	1222	3.15	1223	3.15	1224	3.15
1225	3.04	1226	2.94	1227	2.84	1228	2.73	1229	2.68
1230	2.58	1231	2.48	1232	2.37	1233	2.22	1234	2.11
1235	2.06	1236	1.96	1237	1.86	1238	1.75	1239	1.65
1240	1.65	1241	1.70	1242	1.70	1243	1.70	1244	1.65
1245	1.65	1246	1.65	1247	1.70	1248	1.70	1249	1.70
1250	1.65	1251	1.65	1252	1.65	1253	1.65	1254	1.70
1255	1.70	1256	1.65	1257	1.65	1258	1.65	1259	1.65
1260	1.70	1261	1.70	1262	1.65	1263	1.65	1264	1.65
1265	1.65	1266	1.70	1267	1.70	1268	1.70	1269	1.65
1270	1.65	1271	1.65	1272	1.70	1273	1.70	1274	1.70
1275	1.65	1276	1.65	1277	1.65	1278	1.70	1279	1.70
1280	1.70	1281	1.65	1282	1.65	1283	1.65	1284	1.65
1285	1.70	1286	1.70	1287	1.65	1288	1.65	1289	1.65
1290	1.65	1291	1.70	1292	1.70	1293	1.65	1294	1.65
1295	1.65	1296	1.65	1297	1.65	1298	1.60	1299	1.55
1300	1.50	1310	1.03	1320	0.98	1330	1.01	1340	1.01
1350	1.01	1360	1.01	1370	1.01	1380	1.01	1390	1.01
1400	0.95	1420	1.01	1440	1.01	1460	0.00	1500	0.00

Ventura County Watershed Protection District
Modified Rational Method Hydrology Program (VCRat v2.64)

Job: 1 Project: Camarillo Springs Golf Course

Page: 3

Hydrograph Printouts

HYDROGRAPH PRINTOUT AT: 3A

TOTAL AREA TO HYDROGRAPH: 23 acres
HYDROGRAPH PEAK: 26 cfs
TIME OF PEAK: 1155 minutes
HYDROGRAPH VOLUME: 4.37 acre-ft

TIME (min)	FLOW (cfs)	TIME (min)	FLOW (cfs)	TIME (min)	FLOW (cfs)	TIME (min)	FLOW (cfs)	TIME (min)	FLOW (cfs)
0	0.00	100	1.00	200	1.00	300	1.00	400	1.00
500	0.99	600	1.16	700	1.67	800	1.67	900	2.20
1000	3.13	1050	4.05	1100	5.39	1110	7.58	1120	10.06
1130	10.75	1131	10.76	1132	10.77	1133	10.72	1134	10.73
1135	10.75	1136	10.69	1137	10.70	1138	10.72	1139	10.73
1140	10.67	1141	10.83	1142	10.99	1143	11.08	1144	11.24
1145	11.77	1146	12.35	1147	12.94	1148	13.53	1149	15.96
1150	18.42	1151	20.88	1152	23.25	1153	25.62	1154	26.19
1155	26.34	1156	26.19	1157	26.05	1158	25.98	1159	25.76
1160	25.26	1161	24.69	1162	24.11	1163	23.61	1164	21.17
1165	18.35	1166	15.67	1167	12.87	1168	10.09	1169	9.15
1170	8.71	1171	8.35	1172	7.99	1173	7.62	1174	7.33
1175	6.97	1176	6.61	1177	6.17	1178	5.66	1179	5.30
1180	5.16	1181	5.05	1182	4.95	1183	4.90	1184	4.80
1185	4.74	1186	4.64	1187	4.59	1188	4.49	1189	4.33
1190	4.18	1191	4.02	1192	3.92	1193	3.87	1194	3.76
1195	3.71	1196	3.61	1197	3.56	1198	3.51	1199	3.45
1200	3.35	1201	3.30	1202	3.20	1203	3.15	1204	3.15
1205	3.15	1206	3.15	1207	3.15	1208	3.15	1209	3.15
1210	3.15	1211	3.15	1212	3.15	1213	3.09	1214	3.09
1215	3.09	1216	3.09	1217	3.09	1218	3.15	1219	3.15
1220	3.15	1221	3.15	1222	3.15	1223	3.15	1224	3.15
1225	3.04	1226	2.94	1227	2.84	1228	2.73	1229	2.68
1230	2.58	1231	2.48	1232	2.37	1233	2.22	1234	2.11
1235	2.06	1236	1.96	1237	1.86	1238	1.75	1239	1.65
1240	1.65	1241	1.70	1242	1.70	1243	1.70	1244	1.65
1245	1.65	1246	1.65	1247	1.70	1248	1.70	1249	1.70
1250	1.65	1251	1.65	1252	1.65	1253	1.65	1254	1.70
1255	1.70	1256	1.65	1257	1.65	1258	1.65	1259	1.65
1260	1.70	1261	1.70	1262	1.65	1263	1.65	1264	1.65
1265	1.65	1266	1.70	1267	1.70	1268	1.70	1269	1.65
1270	1.65	1271	1.65	1272	1.70	1273	1.70	1274	1.70
1275	1.65	1276	1.65	1277	1.65	1278	1.70	1279	1.70

1280	1.70	1281	1.65	1282	1.65	1283	1.65	1284	1.65
1285	1.70	1286	1.70	1287	1.65	1288	1.65	1289	1.65
1290	1.65	1291	1.70	1292	1.70	1293	1.65	1294	1.65
1295	1.65	1296	1.65	1297	1.65	1298	1.60	1299	1.55
1300	1.50	1310	1.03	1320	0.98	1330	1.01	1340	1.01
1350	1.01	1360	1.01	1370	1.01	1380	1.01	1390	1.01
1400	0.95	1420	1.01	1440	1.01	1460	0.00	1500	0.00

Ventura County Watershed Protection District
Modified Rational Method Hydrology Program (VCRat v2.64)

Job: 1 Project: Camarillo Springs Golf Course

VCRat Model Input

Model Lines

```
005     1  001A Header place holder
005     1  002A Header place holder
005     1  003A Header place holder
999
999
006     1  001A 010      099A97                                G1
006     1  002A 020059002315A97                              1
006     1  003A 010      099A97                              1  2
999
```

Ventura County Watershed Protection District
Modified Rational Method Hydrology Program (VCRat v2.64)

Modified Rational Model Results Report

Job: 1 Project: Camarillo Springs Golf Course

Project Description

Camarillo Springs Golf Course Hydrology
Storm Event: 25-Year
Developed Condition Drainage Area - 2

VCRat version: 2.64.0.30
VCRain version: 201601
DOS EXE version: PC 2.64-201605
VCRain Curve Set: VCWPD 2016 Revised Curve Set
Curve A: CON3: Conejo Creek
Curve B: None
Curve C: None
Curve D: None

Ventura County Watershed Protection District
Modified Rational Method Hydrology Program (VCRat v2.64)

Job: 1 Project: Camarillo Springs Golf Course

Page: 2

Model Results

SUBAREA DATA AND RESULTS							ACCUMULATED DATA			ROUTING AFTER ACCUMULATION								
NODE ID	SOIL TYPE	RAIN ZONE	TC (MIN)	% IMP	AREA (AC)	FLOW (CFS)	AREA (AC)	FLOW (CFS)	TIME (MIN)	CHANNEL TYPE	LENGTH (FT)	SLOPE (FT/FT)	SIZE (FT)	H:V (Z)	N VALUES CHNL	N VALUES SIDES	VEL (FT/S)	DEPTH (FT)
1A	---	---	--	--	---	---	0	0	----	-------	----	-------	---	----	-----	-----	--	--
2A	020	A25	12	59	23	36	23	36	1154	-------	----	-------	---	----	-----	-----	--	--
3A	---	---	--	--	---	---	23	36	1154	-------	----	-------	---	----	-----	-----	--	--

Issue/Warning Messages

TYPE	ERR NO	PROCEDURE	LOCATION	MESSAGE

NO ISSUES OR WARNINGS DETECTED

HYDROGRAPH PRINTOUT AT: 2A

TOTAL AREA TO HYDROGRAPH: 23 acres
HYDROGRAPH PEAK: 36 cfs
TIME OF PEAK: 1154 minutes
HYDROGRAPH VOLUME: 5.37 acre-ft

TIME (min)	FLOW (cfs)	TIME (min)	FLOW (cfs)	TIME (min)	FLOW (cfs)	TIME (min)	FLOW (cfs)	TIME (min)	FLOW (cfs)
0	0.00	100	1.22	200	1.22	300	1.22	400	1.22
500	1.22	600	1.42	700	2.03	800	2.03	900	2.67
1000	3.80	1050	4.92	1100	6.98	1110	10.30	1120	13.07
1130	13.49	1131	13.47	1132	13.44	1133	13.41	1134	13.48
1135	13.45	1136	13.42	1137	13.39	1138	13.37	1139	13.34
1140	13.31	1141	13.56	1142	13.72	1143	13.99	1144	14.18
1145	15.10	1146	15.92	1147	16.74	1148	17.65	1149	21.35
1150	25.03	1151	28.70	1152	32.29	1153	35.71	1154	36.43
1155	36.34	1156	36.25	1157	35.35	1158	34.44	1159	33.63
1160	32.74	1161	29.15	1162	25.48	1163	21.80	1164	18.28
1165	13.99	1166	12.61	1167	11.97	1168	11.33	1169	10.87
1170	10.33	1171	9.87	1172	9.33	1173	8.79	1174	8.24
1175	7.79	1176	7.24	1177	7.06	1178	6.88	1179	6.70
1180	6.52	1181	6.34	1182	6.15	1183	5.97	1184	5.88
1185	5.61	1186	5.52	1187	5.34	1188	5.09	1189	5.03
1190	4.90	1191	4.77	1192	4.71	1193	4.58	1194	4.51
1195	4.38	1196	4.19	1197	4.13	1198	4.00	1199	3.87
1200	3.80	1201	3.80	1202	3.80	1203	3.80	1204	3.80
1205	3.80	1206	3.80	1207	3.80	1208	3.80	1209	3.80
1210	3.80	1211	3.80	1212	3.80	1213	3.80	1214	3.80
1215	3.80	1216	3.80	1217	3.80	1218	3.80	1219	3.74
1220	3.80	1221	3.80	1222	3.80	1223	3.80	1224	3.80
1225	3.67	1226	3.48	1227	3.35	1228	3.22	1229	3.03
1230	2.90	1231	2.77	1232	2.64	1233	2.51	1234	2.32
1235	2.19	1236	2.06	1237	2.00	1238	2.06	1239	2.00
1240	2.00	1241	2.06	1242	2.00	1243	2.06	1244	2.06
1245	2.00	1246	2.06	1247	2.06	1248	2.00	1249	2.06
1250	2.00	1251	2.06	1252	2.06	1253	2.00	1254	2.06
1255	2.06	1256	2.00	1257	2.06	1258	2.00	1259	2.00
1260	2.06	1261	2.00	1262	2.06	1263	2.06	1264	2.00
1265	2.06	1266	2.00	1267	2.00	1268	2.06	1269	2.00
1270	2.06	1271	2.06	1272	2.00	1273	2.06	1274	2.06
1275	2.00	1276	2.06	1277	2.00	1278	2.06	1279	2.06

1280	2.00	1281	2.06	1282	2.06	1283	2.00	1284	2.06
1285	2.00	1286	2.00	1287	2.06	1288	2.00	1289	2.06
1290	2.06	1291	2.00	1292	2.06	1293	2.06	1294	2.00
1295	2.06	1296	2.00	1297	2.00	1298	1.93	1299	1.80
1300	1.80	1310	1.22	1320	1.17	1330	1.22	1340	1.24
1350	1.24	1360	1.24	1370	1.17	1380	1.22	1390	1.24
1400	1.24	1420	1.20	1440	1.24	1460	0.00	1500	0.00

Hydrograph Printouts

HYDROGRAPH PRINTOUT AT: 3A

TOTAL AREA TO HYDROGRAPH: 23 acres
HYDROGRAPH PEAK: 36 cfs
TIME OF PEAK: 1154 minutes
HYDROGRAPH VOLUME: 5.37 acre-ft

TIME (min)	FLOW (cfs)	TIME (min)	FLOW (cfs)	TIME (min)	FLOW (cfs)	TIME (min)	FLOW (cfs)	TIME (min)	FLOW (cfs)
0	0.00	100	1.22	200	1.22	300	1.22	400	1.22
500	1.22	600	1.42	700	2.03	800	2.03	900	2.67
1000	3.80	1050	4.92	1100	6.98	1110	10.30	1120	13.07
1130	13.49	1131	13.47	1132	13.44	1133	13.41	1134	13.48
1135	13.45	1136	13.42	1137	13.39	1138	13.37	1139	13.34
1140	13.31	1141	13.56	1142	13.72	1143	13.99	1144	14.18
1145	15.10	1146	15.92	1147	16.74	1148	17.65	1149	21.35
1150	25.03	1151	28.70	1152	32.29	1153	35.71	1154	36.43
1155	36.34	1156	36.25	1157	35.35	1158	34.44	1159	33.63
1160	32.74	1161	29.15	1162	25.48	1163	21.80	1164	18.28
1165	13.99	1166	12.61	1167	11.97	1168	11.33	1169	10.87
1170	10.33	1171	9.87	1172	9.33	1173	8.79	1174	8.24
1175	7.79	1176	7.24	1177	7.06	1178	6.88	1179	6.70
1180	6.52	1181	6.34	1182	6.15	1183	5.97	1184	5.88
1185	5.61	1186	5.52	1187	5.34	1188	5.09	1189	5.03
1190	4.90	1191	4.77	1192	4.71	1193	4.58	1194	4.51
1195	4.38	1196	4.19	1197	4.13	1198	4.00	1199	3.87
1200	3.80	1201	3.80	1202	3.80	1203	3.80	1204	3.80
1205	3.80	1206	3.80	1207	3.80	1208	3.80	1209	3.80
1210	3.80	1211	3.80	1212	3.80	1213	3.80	1214	3.80
1215	3.80	1216	3.80	1217	3.80	1218	3.80	1219	3.74

1220	3.80	1221	3.80	1222	3.80	1223	3.80	1224	3.80
1225	3.67	1226	3.48	1227	3.35	1228	3.22	1229	3.03
1230	2.90	1231	2.77	1232	2.64	1233	2.51	1234	2.32
1235	2.19	1236	2.06	1237	2.00	1238	2.06	1239	2.00
1240	2.00	1241	2.06	1242	2.00	1243	2.06	1244	2.06
1245	2.00	1246	2.06	1247	2.06	1248	2.00	1249	2.06
1250	2.00	1251	2.06	1252	2.06	1253	2.00	1254	2.06
1255	2.06	1256	2.00	1257	2.06	1258	2.00	1259	2.00
1260	2.06	1261	2.00	1262	2.06	1263	2.06	1264	2.00
1265	2.06	1266	2.00	1267	2.00	1268	2.06	1269	2.00
1270	2.06	1271	2.06	1272	2.00	1273	2.06	1274	2.06
1275	2.00	1276	2.06	1277	2.00	1278	2.06	1279	2.06
1280	2.00	1281	2.06	1282	2.06	1283	2.00	1284	2.06
1285	2.00	1286	2.00	1287	2.06	1288	2.00	1289	2.06
1290	2.06	1291	2.00	1292	2.06	1293	2.06	1294	2.00
1295	2.06	1296	2.00	1297	2.00	1298	1.93	1299	1.80
1300	1.80	1310	1.22	1320	1.17	1330	1.22	1340	1.24
1350	1.24	1360	1.24	1370	1.17	1380	1.22	1390	1.24
1400	1.24	1420	1.20	1440	1.24	1460	0.00	1500	0.00

Ventura County Watershed Protection District
Modified Rational Method Hydrology Program (VCRat v2.64)

Job: 1 Project: Camarillo Springs Golf Course
Page: 4

VCRat Model Input

Model Lines

```
005     1  001A Header place holder
005     1  002A Header place holder
005     1  003A Header place holder
999
999
006     1  001A 010      099A97                              G1
006     1  002A 020059002312A97                            1
006     1  003A 010      099A97                              1  2
999
```

Ventura County Watershed Protection District
Modified Rational Method Hydrology Program (VCRat v2.64)

Modified Rational Model Results Report

Job: 1 Project: Camarillo Springs Golf Course

Project Description

Camarillo Springs Golf Course Hydrology
Storm Event: 50-Year
Developed Condition Drainage Area - 2

VCRat version: 2.64.0.30
VCRain version: 201601
DOS EXE version: PC 2.64-201605
VCRain Curve Set: VCWPD 2016 Revised Curve Set
Curve A: CON3: Conejo Creek
Curve B: None
Curve C: None
Curve D: None

Ventura County Watershed Protection District
Modified Rational Method Hydrology Program (VCRat v2.64)

Job: 1 Project: Camarillo Springs Golf Course

Page: 2

Model Results

NODE ID	SOIL TYPE	RAIN ZONE	TC (MIN)	% IMP	AREA (AC)	FLOW (CFS)	ACCUMULATED DATA -- AREA (AC)	ACCUMULATED DATA -- FLOW (CFS)	ACCUMULATED DATA -- TIME (MIN)	ROUTING AFTER ACCUMULATION -- CHANNEL TYPE	LENGTH (FT)	SLOPE (FT/FT)	SIZE (FT)	H:V (Z)	N VALUES CHNL	N VALUES SIDES	VEL (FT/S)	DEPTH (FT)
1A	---	---	--	--	---	---	0	0	----	-------	----	-------	---	----	-----	-----	--	--
2A	020	A50	9	59	23	48	23	48	1154	-------	----	-------	---	----	-----	-----	--	--
3A	---	---	--	--	---	---	23	48	1154	-------	----	-------	---	----	-----	-----	--	--

Issue/Warning Messages

TYPE	ERR NO	PROCEDURE	LOCATION	MESSAGE

NO ISSUES OR WARNINGS DETECTED

HYDROGRAPH PRINTOUT AT: 2A

TOTAL AREA TO HYDROGRAPH: 23 acres
HYDROGRAPH PEAK: 48 cfs
TIME OF PEAK: 1154 minutes
HYDROGRAPH VOLUME: 6.13 acre-ft

TIME (min)	FLOW (cfs)	TIME (min)	FLOW (cfs)	TIME (min)	FLOW (cfs)	TIME (min)	FLOW (cfs)	TIME (min)	FLOW (cfs)
0	0.00	100	1.39	200	1.38	300	1.39	400	1.38
500	1.39	600	1.61	700	2.31	800	2.31	900	3.02
1000	4.30	1050	5.74	1100	8.15	1110	12.72	1120	15.59
1130	15.48	1131	15.47	1132	15.46	1133	15.44	1134	15.43
1135	15.42	1136	15.41	1137	15.40	1138	15.38	1139	15.37
1140	15.37	1141	15.74	1142	15.98	1143	16.35	1144	16.71
1145	17.92	1146	19.24	1147	20.57	1148	21.89	1149	27.39
1150	32.53	1151	37.82	1152	43.00	1153	48.20	1154	48.32
1155	47.24	1156	45.90	1157	44.57	1158	39.02	1159	33.48
1160	28.11	1161	22.61	1162	17.07	1163	15.74	1164	15.49
1165	14.76	1166	14.02	1167	13.16	1168	12.43	1169	11.57
1170	10.72	1171	10.00	1172	9.27	1173	8.54	1174	8.42
1175	8.42	1176	8.54	1177	8.18	1178	7.94	1179	7.70
1180	7.46	1181	7.09	1182	6.85	1183	6.61	1184	6.37
1185	6.00	1186	6.12	1187	6.00	1188	6.12	1189	5.76
1190	5.64	1191	5.28	1192	5.16	1193	4.90	1194	4.81
1195	4.64	1196	4.47	1197	4.30	1198	4.30	1199	4.30
1200	4.30	1201	4.30	1202	4.30	1203	4.30	1204	4.30
1205	4.30	1206	4.30	1207	4.30	1208	4.30	1209	4.30
1210	4.30	1211	4.38	1212	4.30	1213	4.30	1214	4.30
1215	4.30	1216	4.30	1217	4.30	1218	4.30	1219	4.30
1220	4.30	1221	4.30	1222	4.30	1223	4.30	1224	4.30
1225	4.13	1226	3.87	1227	3.70	1228	3.44	1229	3.18
1230	3.01	1231	2.75	1232	2.58	1233	2.32	1234	2.32
1235	2.32	1236	2.32	1237	2.32	1238	2.32	1239	2.32
1240	2.23	1241	2.23	1242	2.23	1243	2.23	1244	2.23
1245	2.23	1246	2.23	1247	2.23	1248	2.23	1249	2.32
1250	2.32	1251	2.32	1252	2.32	1253	2.32	1254	2.32
1255	2.32	1256	2.32	1257	2.32	1258	2.32	1259	2.32
1260	2.32	1261	2.32	1262	2.32	1263	2.32	1264	2.32
1265	2.32	1266	2.32	1267	2.32	1268	2.32	1269	2.32
1270	2.32	1271	2.32	1272	2.32	1273	2.32	1274	2.32
1275	2.32	1276	2.32	1277	2.32	1278	2.32	1279	2.32
1280	2.32	1281	2.32	1282	2.32	1283	2.32	1284	2.32
1285	2.32	1286	2.32	1287	2.32	1288	2.32	1289	2.32
1290	2.32	1291	2.23	1292	2.23	1293	2.23	1294	2.23
1295	2.23	1296	2.23	1297	2.15	1298	2.06	1299	1.98
1300	1.98	1310	1.39	1320	1.31	1330	1.39	1340	1.39
1350	1.39	1360	1.39	1370	1.39	1380	1.39	1390	1.39
1400	1.39	1420	1.39	1440	1.39	1460	0.00	1500	0.00

Ventura County Watershed Protection District
Modified Rational Method Hydrology Program (VCRat v2.64)

Job: 1 Project: Camarillo Springs Golf Course

Hydrograph Printouts

HYDROGRAPH PRINTOUT AT: 3A

TOTAL AREA TO HYDROGRAPH: 23 acres
HYDROGRAPH PEAK: 48 cfs
TIME OF PEAK: 1154 minutes
HYDROGRAPH VOLUME: 6.13 acre-ft

TIME (min)	FLOW (cfs)	TIME (min)	FLOW (cfs)	TIME (min)	FLOW (cfs)	TIME (min)	FLOW (cfs)	TIME (min)	FLOW (cfs)
0	0.00	100	1.39	200	1.38	300	1.39	400	1.38
500	1.39	600	1.61	700	2.31	800	2.31	900	3.02
1000	4.30	1050	5.74	1100	8.15	1110	12.72	1120	15.59
1130	15.48	1131	15.47	1132	15.46	1133	15.44	1134	15.43
1135	15.42	1136	15.41	1137	15.40	1138	15.38	1139	15.37
1140	15.37	1141	15.74	1142	15.98	1143	16.35	1144	16.71
1145	17.92	1146	19.24	1147	20.57	1148	21.89	1149	27.39
1150	32.53	1151	37.82	1152	43.00	1153	48.20	1154	48.32
1155	47.24	1156	45.90	1157	44.57	1158	39.02	1159	33.48
1160	28.11	1161	22.61	1162	17.07	1163	15.74	1164	15.49
1165	14.76	1166	14.02	1167	13.16	1168	12.43	1169	11.57
1170	10.72	1171	10.00	1172	9.27	1173	8.54	1174	8.42
1175	8.42	1176	8.54	1177	8.18	1178	7.94	1179	7.70
1180	7.46	1181	7.09	1182	6.85	1183	6.61	1184	6.37
1185	6.00	1186	6.12	1187	6.00	1188	6.12	1189	5.76
1190	5.64	1191	5.28	1192	5.16	1193	4.90	1194	4.81
1195	4.64	1196	4.47	1197	4.30	1198	4.30	1199	4.30
1200	4.30	1201	4.30	1202	4.30	1203	4.30	1204	4.30
1205	4.30	1206	4.30	1207	4.30	1208	4.30	1209	4.30
1210	4.30	1211	4.38	1212	4.30	1213	4.30	1214	4.30
1215	4.30	1216	4.30	1217	4.30	1218	4.30	1219	4.30
1220	4.30	1221	4.30	1222	4.30	1223	4.30	1224	4.30
1225	4.13	1226	3.87	1227	3.70	1228	3.44	1229	3.18
1230	3.01	1231	2.75	1232	2.58	1233	2.32	1234	2.32
1235	2.32	1236	2.32	1237	2.32	1238	2.32	1239	2.32
1240	2.23	1241	2.23	1242	2.23	1243	2.23	1244	2.23
1245	2.23	1246	2.23	1247	2.23	1248	2.23	1249	2.32
1250	2.32	1251	2.32	1252	2.32	1253	2.32	1254	2.32
1255	2.32	1256	2.32	1257	2.32	1258	2.32	1259	2.32
1260	2.32	1261	2.32	1262	2.32	1263	2.32	1264	2.32
1265	2.32	1266	2.32	1267	2.32	1268	2.32	1269	2.32
1270	2.32	1271	2.32	1272	2.32	1273	2.32	1274	2.32
1275	2.32	1276	2.32	1277	2.32	1278	2.32	1279	2.32

1280	2.32	1281	2.32	1282	2.32	1283	2.32	1284	2.32
1285	2.32	1286	2.32	1287	2.32	1288	2.32	1289	2.32
1290	2.32	1291	2.23	1292	2.23	1293	2.23	1294	2.23
1295	2.23	1296	2.23	1297	2.15	1298	2.06	1299	1.98
1300	1.98	1310	1.39	1320	1.31	1330	1.39	1340	1.39
1350	1.39	1360	1.39	1370	1.39	1380	1.39	1390	1.39
1400	1.39	1420	1.39	1440	1.39	1460	0.00	1500	0.00

VCRat Model Input

Model Lines

```
005     1  001A Header place holder
005     1  002A Header place holder
005     1  003A Header place holder
999
999
006     1  001A 010      099A97                                G1
006     1  002A 020059002309A97                              1
006     1  003A 010      099A97                              1  2
999
```

Ventura County Watershed Protection District
Modified Rational Method Hydrology Program (VCRat v2.64)

Modified Rational Model Results Report

Job: 1 Project: Camarillo Springs Golf Course

Project Description

Camarillo Springs Golf Course Hydrology
Storm Event: 100-Year
Developed Condition Drainage Area - 2

VCRat version: 2.64.0.30
VCRain version: 201601
DOS EXE version: PC 2.64-201605
VCRain Curve Set: VCWPD 2016 Revised Curve Set
Curve A: CON3: Conejo Creek
Curve B: None
Curve C: None
Curve D: None

Ventura County Watershed Protection District
Modified Rational Method Hydrology Program (VCRat v2.64)

Job: 1 Project: Camarillo Springs Golf Course

Page: 2

Model Results

SUBAREA DATA AND RESULTS							ACCUMULATED DATA			ROUTING AFTER ACCUMULATION								
NODE ID	SOIL TYPE	RAIN ZONE	TC (MIN)	% IMP	AREA (AC)	FLOW (CFS)	AREA (AC)	FLOW (CFS)	TIME (MIN)	CHANNEL TYPE	LENGTH (FT)	SLOPE (FT/FT)	SIZE (FT)	H:V (Z)	N VALUES CHNL	N VALUES SIDES	VEL (FT/S)	DEPTH (FT)
1A	---	---	--	--	---	---	0	0	----	-------	----	-------	---	----	-----	-----	--	--
2A	020	A100	8	59	23	57	23	57	1154	-------	----	-------	---	----	-----	-----	--	--
3A	---	---	--	--	---	---	23	57	1154	-------	----	-------	---	----	-----	-----	--	--

Issue/Warning Messages

TYPE	ERR NO	PROCEDURE	LOCATION	MESSAGE

NO ISSUES OR WARNINGS DETECTED

HYDROGRAPH PRINTOUT AT: 2A

TOTAL AREA TO HYDROGRAPH: 23 acres
HYDROGRAPH PEAK: 57 cfs
TIME OF PEAK: 1153 minutes
HYDROGRAPH VOLUME: 6.94 acre-ft

TIME (min)	FLOW (cfs)	TIME (min)	FLOW (cfs)	TIME (min)	FLOW (cfs)	TIME (min)	FLOW (cfs)	TIME (min)	FLOW (cfs)
0	0.00	100	1.57	200	1.56	300	1.57	400	1.57
500	1.56	600	1.82	700	2.59	800	2.60	900	3.40
1000	4.84	1050	6.67	1100	9.40	1110	14.49	1120	17.66
1130	17.66	1131	17.65	1132	17.64	1133	17.62	1134	17.61
1135	17.60	1136	17.58	1137	17.57	1138	17.55	1139	17.55
1140	17.55	1141	17.96	1142	18.37	1143	18.64	1144	19.05
1145	20.68	1146	22.29	1147	23.91	1148	25.52	1149	32.11
1150	38.60	1151	45.39	1152	52.06	1153	57.38	1154	57.38
1155	56.15	1156	54.52	1157	47.43	1158	40.50	1159	33.45
1160	26.46	1161	19.59	1162	17.96	1163	17.69	1164	17.69
1165	16.60	1166	15.65	1167	14.68	1168	13.72	1169	12.75
1170	11.78	1171	10.69	1172	9.60	1173	9.74	1174	9.74
1175	9.74	1176	9.74	1177	9.33	1178	9.06	1179	8.65
1180	8.38	1181	8.11	1182	7.70	1183	7.42	1184	7.02
1185	7.15	1186	7.02	1187	7.02	1188	7.15	1189	6.74
1190	6.47	1191	6.20	1192	5.93	1193	5.52	1194	5.25
1195	5.12	1196	4.83	1197	4.83	1198	4.83	1199	4.74
1200	4.83	1201	4.83	1202	4.83	1203	4.74	1204	4.83
1205	4.83	1206	4.83	1207	4.83	1208	4.83	1209	4.83
1210	4.83	1211	4.83	1212	4.83	1213	4.83	1214	4.83
1215	4.83	1216	4.83	1217	4.83	1218	4.83	1219	4.83
1220	4.83	1221	4.83	1222	4.83	1223	4.83	1224	4.83
1225	4.54	1226	4.25	1227	4.06	1228	3.67	1229	3.38
1230	3.19	1231	2.90	1232	2.51	1233	2.61	1234	2.61
1235	2.61	1236	2.61	1237	2.61	1238	2.61	1239	2.61
1240	2.61	1241	2.61	1242	2.61	1243	2.51	1244	2.61
1245	2.61	1246	2.51	1247	2.61	1248	2.61	1249	2.51
1250	2.61	1251	2.61	1252	2.61	1253	2.61	1254	2.61
1255	2.61	1256	2.61	1257	2.61	1258	2.61	1259	2.61
1260	2.51	1261	2.61	1262	2.61	1263	2.51	1264	2.61
1265	2.61	1266	2.61	1267	2.61	1268	2.61	1269	2.61
1270	2.61	1271	2.61	1272	2.61	1273	2.61	1274	2.51
1275	2.61	1276	2.61	1277	2.51	1278	2.61	1279	2.61

1280	2.61	1281	2.61	1282	2.61	1283	2.61	1284	2.61
1285	2.61	1286	2.61	1287	2.61	1288	2.51	1289	2.61
1290	2.61	1291	2.51	1292	2.61	1293	2.61	1294	2.51
1295	2.61	1296	2.61	1297	2.42	1298	2.32	1299	2.22
1300	2.03	1310	1.62	1320	1.55	1330	1.55	1340	1.55
1350	1.62	1360	1.55	1370	1.55	1380	1.55	1390	1.62
1400	1.55	1420	1.55	1440	1.59	1460	0.00	1500	0.00

Hydrograph Printouts

HYDROGRAPH PRINTOUT AT: 3A

TOTAL AREA TO HYDROGRAPH: 23 acres
HYDROGRAPH PEAK: 57 cfs
TIME OF PEAK: 1153 minutes
HYDROGRAPH VOLUME: 6.94 acre-ft

TIME (min)	FLOW (cfs)	TIME (min)	FLOW (cfs)	TIME (min)	FLOW (cfs)	TIME (min)	FLOW (cfs)	TIME (min)	FLOW (cfs)
0	0.00	100	1.57	200	1.56	300	1.57	400	1.57
500	1.56	600	1.82	700	2.59	800	2.60	900	3.40
1000	4.84	1050	6.67	1100	9.40	1110	14.49	1120	17.66
1130	17.66	1131	17.65	1132	17.64	1133	17.62	1134	17.61
1135	17.60	1136	17.58	1137	17.57	1138	17.55	1139	17.55
1140	17.55	1141	17.96	1142	18.37	1143	18.64	1144	19.05
1145	20.68	1146	22.29	1147	23.91	1148	25.52	1149	32.11
1150	38.60	1151	45.39	1152	52.06	1153	57.38	1154	57.38
1155	56.15	1156	54.52	1157	47.43	1158	40.50	1159	33.45
1160	26.46	1161	19.59	1162	17.96	1163	17.69	1164	17.69
1165	16.60	1166	15.65	1167	14.68	1168	13.72	1169	12.75
1170	11.78	1171	10.69	1172	9.60	1173	9.74	1174	9.74
1175	9.74	1176	9.74	1177	9.33	1178	9.06	1179	8.65
1180	8.38	1181	8.11	1182	7.70	1183	7.42	1184	7.02
1185	7.15	1186	7.02	1187	7.02	1188	7.15	1189	6.74
1190	6.47	1191	6.20	1192	5.93	1193	5.52	1194	5.25
1195	5.12	1196	4.83	1197	4.83	1198	4.83	1199	4.74
1200	4.83	1201	4.83	1202	4.83	1203	4.74	1204	4.83
1205	4.83	1206	4.83	1207	4.83	1208	4.83	1209	4.83
1210	4.83	1211	4.83	1212	4.83	1213	4.83	1214	4.83
1215	4.83	1216	4.83	1217	4.83	1218	4.83	1219	4.83

1220	4.83	1221	4.83	1222	4.83	1223	4.83	1224	4.83
1225	4.54	1226	4.25	1227	4.06	1228	3.67	1229	3.38
1230	3.19	1231	2.90	1232	2.51	1233	2.61	1234	2.61
1235	2.61	1236	2.61	1237	2.61	1238	2.61	1239	2.61
1240	2.61	1241	2.61	1242	2.61	1243	2.51	1244	2.61
1245	2.61	1246	2.51	1247	2.61	1248	2.61	1249	2.51
1250	2.61	1251	2.61	1252	2.61	1253	2.61	1254	2.61
1255	2.61	1256	2.61	1257	2.61	1258	2.61	1259	2.61
1260	2.51	1261	2.61	1262	2.61	1263	2.51	1264	2.61
1265	2.61	1266	2.61	1267	2.61	1268	2.61	1269	2.61
1270	2.61	1271	2.61	1272	2.61	1273	2.61	1274	2.51
1275	2.61	1276	2.61	1277	2.51	1278	2.61	1279	2.61
1280	2.61	1281	2.61	1282	2.61	1283	2.61	1284	2.61
1285	2.61	1286	2.61	1287	2.61	1288	2.51	1289	2.61
1290	2.61	1291	2.51	1292	2.61	1293	2.61	1294	2.51
1295	2.61	1296	2.61	1297	2.42	1298	2.32	1299	2.22
1300	2.03	1310	1.62	1320	1.55	1330	1.55	1340	1.55
1350	1.62	1360	1.55	1370	1.55	1380	1.55	1390	1.62
1400	1.55	1420	1.55	1440	1.59	1460	0.00	1500	0.00

Ventura County Watershed Protection District
Modified Rational Method Hydrology Program (VCRat v2.64)

Job: 1 Project: Camarillo Springs Golf Course

Page: 4

VCRat Model Input

Model Lines

```
005     1  001A Header place holder
005     1  002A Header place holder
005     1  003A Header place holder
999
999
006     1  001A 010      099A97                              G1
006     1  002A 020059002308A97                            1
006     1  003A 010      099A97                              1  2
999
```

APPENDIX II – HYDRAULIC CALCULATIONS

Cross Section for Main SD Line - Area 1

Project Description	
Friction Method	Manning Formula
Solve For	Full Flow Capacity

Input Data		
Roughness Coefficient	0.013	
Channel Slope	0.020	ft/ft
Normal Depth	24.0	in
Diameter	24.0	in
Discharge	31.99	cfs

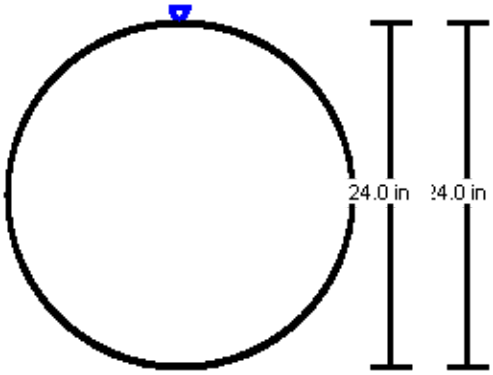

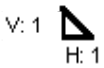

Worksheet for Main SD Line - Area 1

Project Description	
Friction Method	Manning Formula
Solve For	Full Flow Capacity

Input Data		
Roughness Coefficient	0.013	
Channel Slope	0.020	ft/ft
Normal Depth	24.0	in
Diameter	24.0	in
Discharge	31.99	cfs

Results		
Discharge	31.99	cfs
Normal Depth	24.0	in
Flow Area	3.1	ft²
Wetted Perimeter	6.3	ft
Hydraulic Radius	6.0	in
Top Width	0.00	ft
Critical Depth	22.7	in
Percent Full	100.0	%
Critical Slope	0.017	ft/ft
Velocity	10.18	ft/s
Velocity Head	1.61	ft
Specific Energy	3.61	ft
Froude Number	(N/A)	
Maximum Discharge	34.41	cfs
Discharge Full	31.99	cfs
Slope Full	0.020	ft/ft
Flow Type	Undefined	

GVF Input Data		
Downstream Depth	0.0	in
Length	0.0	ft
Number Of Steps	0	

GVF Output Data		
Upstream Depth	0.0	in
Profile Description	N/A	
Profile Headloss	0.00	ft
Average End Depth Over Rise	0.0	%
Normal Depth Over Rise	100.0	%
Downstream Velocity	Infinity	ft/s
Upstream Velocity	Infinity	ft/s
Normal Depth	24.0	in
Critical Depth	22.7	in
Channel Slope	0.020	ft/ft
Critical Slope	0.017	ft/ft

Cross Section for Main SD Line - Area 2

Project Description	
Friction Method	Manning Formula
Solve For	Full Flow Capacity

Input Data		
Roughness Coefficient	0.013	
Channel Slope	0.006	ft/ft
Normal Depth	36.0	in
Diameter	36.0	in
Discharge	51.66	cfs

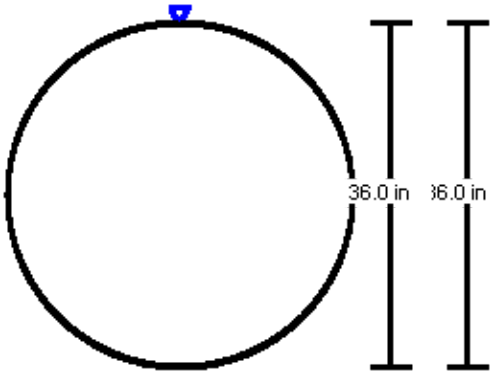

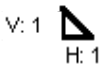

Worksheet for Main SD Line - Area 2

Project Description	
Friction Method	Manning Formula
Solve For	Full Flow Capacity

Input Data		
Roughness Coefficient	0.013	
Channel Slope	0.006	ft/ft
Normal Depth	36.0	in
Diameter	36.0	in
Discharge	51.66	cfs

Results		
Discharge	51.66	cfs
Normal Depth	36.0	in
Flow Area	7.1	ft²
Wetted Perimeter	9.4	ft
Hydraulic Radius	9.0	in
Top Width	0.00	ft
Critical Depth	28.1	in
Percent Full	100.0	%
Critical Slope	0.007	ft/ft
Velocity	7.31	ft/s
Velocity Head	0.83	ft
Specific Energy	3.83	ft
Froude Number	(N/A)	
Maximum Discharge	55.57	cfs
Discharge Full	51.66	cfs
Slope Full	0.006	ft/ft
Flow Type	Undefined	

GVF Input Data		
Downstream Depth	0.0	in
Length	0.0	ft
Number Of Steps	0	

GVF Output Data		
Upstream Depth	0.0	in
Profile Description	N/A	
Profile Headloss	0.00	ft
Average End Depth Over Rise	0.0	%
Normal Depth Over Rise	0.0	%
Downstream Velocity	0.00	ft/s
Upstream Velocity	0.00	ft/s
Normal Depth	36.0	in
Critical Depth	28.1	in
Channel Slope	0.006	ft/ft
Critical Slope	0.007	ft/ft

Cross Section for Main SD Line - Area 3

Project Description	
Friction Method	Manning Formula
Solve For	Full Flow Capacity

Input Data	
Roughness Coefficient	0.013
Channel Slope	0.005 ft/ft
Normal Depth	18.0 in
Diameter	18.0 in
Discharge	7.43 cfs

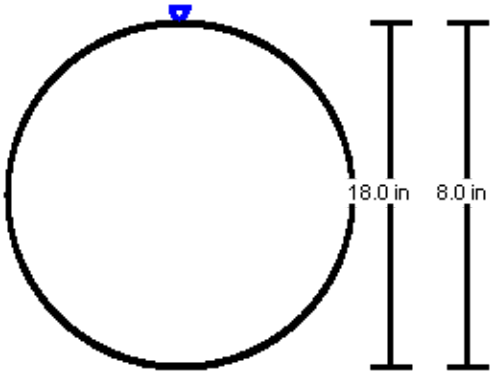

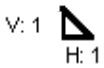

Worksheet for Main SD Line - Area 3

Project Description	
Friction Method	Manning Formula
Solve For	Full Flow Capacity

Input Data		
Roughness Coefficient	0.013	
Channel Slope	0.005	ft/ft
Normal Depth	18.0	in
Diameter	18.0	in
Discharge	7.43	cfs

Results		
Discharge	7.43	cfs
Normal Depth	18.0	in
Flow Area	1.8	ft²
Wetted Perimeter	4.7	ft
Hydraulic Radius	4.5	in
Top Width	0.00	ft
Critical Depth	12.7	in
Percent Full	100.0	%
Critical Slope	0.007	ft/ft
Velocity	4.20	ft/s
Velocity Head	0.27	ft
Specific Energy	1.77	ft
Froude Number	(N/A)	
Maximum Discharge	7.99	cfs
Discharge Full	7.43	cfs
Slope Full	0.005	ft/ft
Flow Type	Undefined	

GVF Input Data		
Downstream Depth	0.0	in
Length	0.0	ft
Number Of Steps	0	

GVF Output Data		
Upstream Depth	0.0	in
Profile Description	N/A	
Profile Headloss	0.00	ft
Average End Depth Over Rise	0.0	%
Normal Depth Over Rise	100.0	%
Downstream Velocity	Infinity	ft/s
Upstream Velocity	Infinity	ft/s
Normal Depth	18.0	in
Critical Depth	12.7	in
Channel Slope	0.005	ft/ft
Critical Slope	0.007	ft/ft

APPENDIX III – DRAINAGE MAP

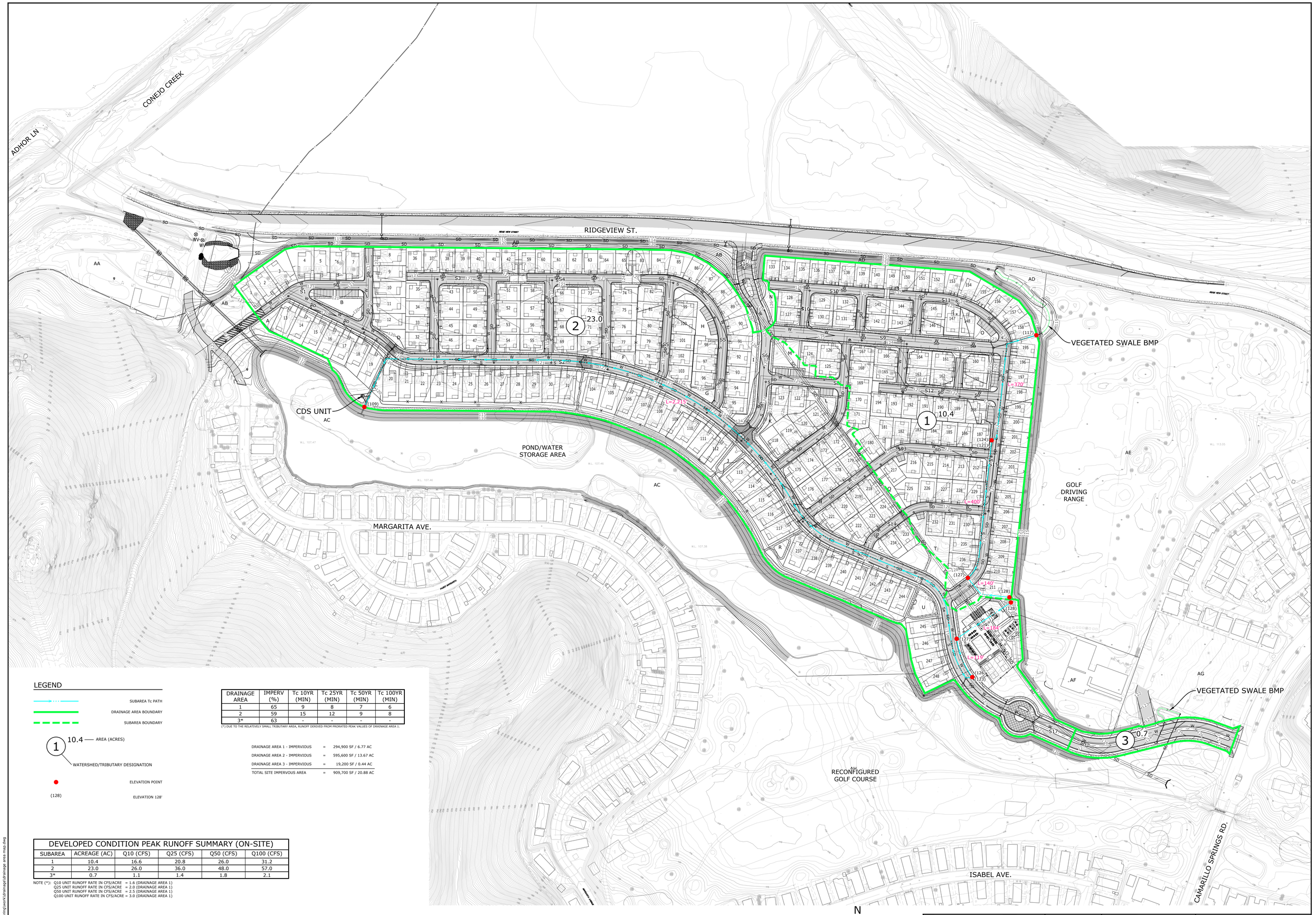

LEGEND

- SUBAREA Tc PATH
- DRAINAGE AREA BOUNDARY
- SUBAREA BOUNDARY
- 1 / 10.4 — AREA (ACRES); WATERSHED/TRIBUTARY DESIGNATION
- ELEVATION POINT
- (128) — ELEVATION 128'

DRAINAGE AREA	IMPERV (%)	Tc 10YR (MIN)	Tc 25YR (MIN)	Tc 50YR (MIN)	Tc 100YR (MIN)
1	65	9	8	7	6
2	59	15	12	9	8
3*	63	-	-	-	-

(*) DUE TO THE RELATIVELY SMALL TRIBUTARY AREA, RUNOFF DERIVED FROM PRORATED PEAK VALUES OF DRAINAGE AREA 1

DRAINAGE AREA 1 - IMPERVIOUS	=	294,900 SF / 6.77 AC
DRAINAGE AREA 2 - IMPERVIOUS	=	595,600 SF / 13.67 AC
DRAINAGE AREA 3 - IMPERVIOUS	=	19,200 SF / 0.44 AC
TOTAL SITE IMPERVOUS AREA	=	909,700 SF / 20.88 AC

DEVELOPED CONDITION PEAK RUNOFF SUMMARY (ON-SITE)

SUBAREA	ACREAGE (AC)	Q10 (CFS)	Q25 (CFS)	Q50 (CFS)	Q100 (CFS)
1	10.4	16.6	20.8	26.0	31.2
2	23.0	26.0	36.0	48.0	57.0
3*	0.7	1.1	1.4	1.8	2.1

NOTE (*): Q10 UNIT RUNOFF RATE IN CFS/ACRE = 1.6 (DRAINAGE AREA 1)
Q25 UNIT RUNOFF RATE IN CFS/ACRE = 2.0 (DRAINAGE AREA 1)
Q50 UNIT RUNOFF RATE IN CFS/ACRE = 2.5 (DRAINAGE AREA 1)
Q100 UNIT RUNOFF RATE IN CFS/ACRE = 3.0 (DRAINAGE AREA 1)

N / W / E / S

SCALE: 1"=80'
0 80 160 240

REVISIONS

MARK	DATE	DESCRIPTION	BY

REVIEWED BY: _____ DATE _____ DATE _____

Encompass Consultant Group
333 N. LANTANA ST, SUITE 287, CAMARILLO, CA 93010
PHONE: 805.322.4443 WEBSITE: WWW.ECGCIVIL.COM
GLEN H. PACE DATE: 8/26/19
PROJECT ENGINEER
R.C.E. 61468

TENTATIVE TRACT NO. 6016
CAMARILLO SPRINGS GOLF COURSE
DRAINAGE AREA MAP (DEVELOPED CONDITION)
CAMARILLO, CA

SCALE: HORIZ. 1" = 80' VERT. _____
WORK ORDER
DRAWN BY: TJS
CHECKED BY: GHP
SHEET NO. 1 OF 1

DRAWING: n:\projects\10381\engineering\work\drainage\drainage area map.dwg

APPENDIX IV – REFERENCE MATERIALS

RANCHO CALLEGUAS

Bk 229

Tax Rate Area
07090 07095 07196 07177 07190 07030
07031 07148 07084 07085 75025 75026

234-04

1" = 800'

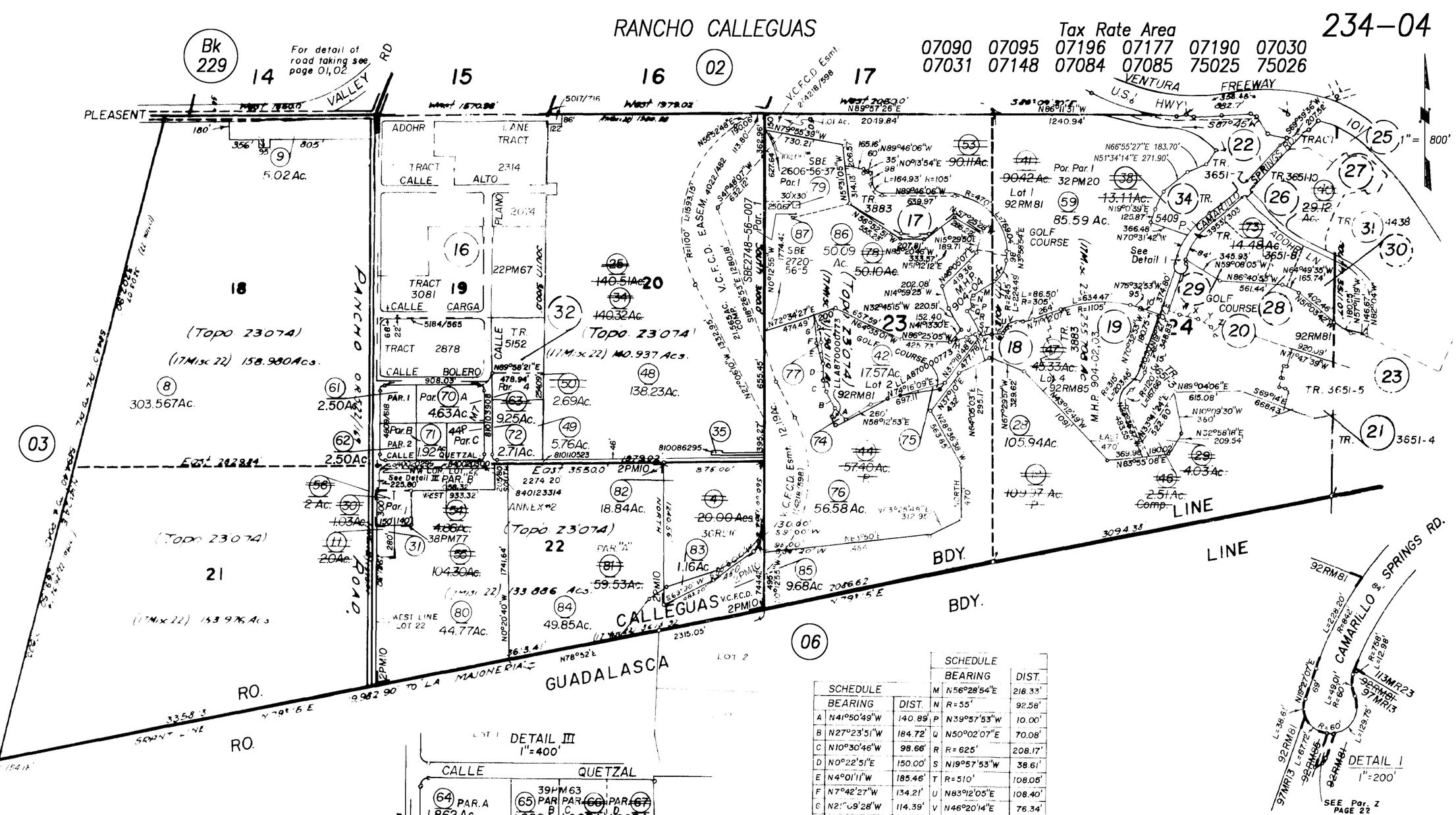

SCHEDULE		
BEARING		DIST.
A	N41°50'49"W	140.89'
B	N27°23'51"W	184.72'
C	N10°30'46"W	98.66'
D	N0°22'51"E	150.00'
E	N4°01'11"W	185.46'
F	N7°42'27"W	134.21'
G	N21°09'28"W	114.39'
H	N73°20'53"E	162.29'
J	N70°02'07"E	68.65'
K	N19°57'53"W	59.27'
L	N19°57'53"W	199.39'

SCHEDULE		
BEARING		DIST.
M	N56°28'54"E	218.33'
N	R=55'	92.58'
P	N39°57'53"W	10.00'
Q	N50°02'07"E	70.08'
R	R=625'	208.17'
S	N19°57'53"W	38.61'
T	R=510'	108.06'
U	N83°12'05"E	108.40'
V	N46°20'14"E	76.34'
W	N70°32'53"W	111.59'
X	N76°46'43"W	170.52'
Y	N60°51'34"W	129.38'
Z	N25°05'47"[illegible]	87.24'

Tract 3651-2, M.R. Bk.92, Pg.85
Tract 3651-1, M.R. Bk.92, Pg.81
Rancho Calleguas, M.R. Bk.17, Pg.16

NOTE: ASSESSOR PARCELS SHOWN ON THIS PAGE DO NOT NECESSARILY CONSTITUTE LEGAL LOTS. CHECK WITH COUNTY SURVEYOR'S OFFICE OR PLANNING DIVISION TO VERIFY.

Assessor's Block Numbers Shown in Ellipses.
Assessor's Parcel Numbers Shown in Circles.
Assessor's Mineral Numbers Shown in Squares.

CITY OF CAMARILLO & VICINITY
Ventura County Assessor's Map.

DRAWN		REVISED	2-18-2005
REDRAWN		CREATED	
INKED	PLOTTED	EFFECTIVE	ROLL
Compiled By Ventura County Assessor's Office			

Parcel Report

Parcel Information

APN	234004059
APN Suffix	5
Document Date	20151204
Document Number	150175371
Tract Number	
Map Number	
Situs Number	791
Situs Direction	
Situs Street	CAMARILLO SPRINGS
Situs Suffix	RD
Acreage	85.58

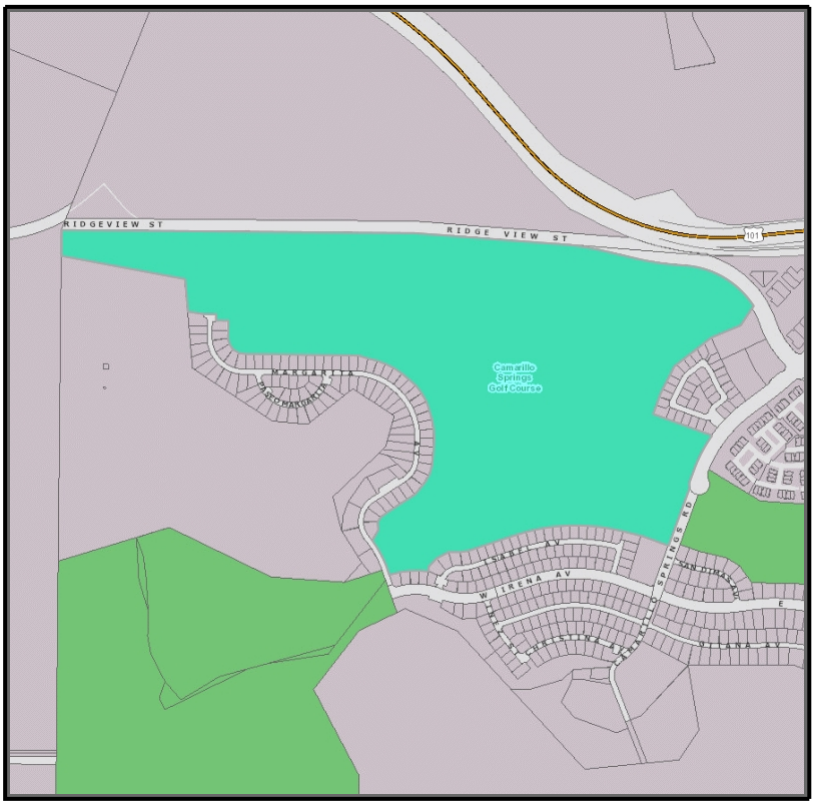

Cities

City Boundary

City Name: Camarillo

Election Precincts

Election Precinct

Number: CAMARILLO NO. 333

WARNING: The information contained herein was created by the Ventura County Geographic Information System (GIS), which is designed and operated solely for the convenience of the County and related contract entities. The County does not warrant the accuracy of this information, and no decision involving a risk of economic loss or physical injury should be made in reliance thereon.

Parcel Report

Political Districts

Assembly Districts

Name:	Jacqui Irwin
Ordinal:	44TH

Senatorial Districts

Name:	Hannah Beth Jackson
Ordinal:	19TH

Congressional Districts

Name:	Julia Brownley
Ordinal:	26TH

Supervisorial Districts

Name:	Kelly Long
Ordinal:	3rd

School Districts

Elementary School Districts

Name:	PLEASANT VALLEY

Secondary School Districts

Name:	OXNARD UNION

Land Use

County SOAR

No

General Plan

Description:	Urban

Overlay Zones

Name:	Habitat Connectivity Corridors

Zone Designation

Zoning:	Camarillo

WARNING: The information contained herein was created by the Ventura County Geographic Information System (GIS), which is designed and operated solely for the convenience of the County and related contract entities. The County does not warrant the accuracy of this information, and no decision involving a risk of economic loss or physical injury should be made in reliance thereon.

Hazards

Earthquake Fault Hazard Zones

No

Liquefaction

Yes

Military Operations Areas

No

Tsunami Inundation

No

WARNING: The information contained herein was created by the Ventura County Geographic Information System (GIS), which is designed and operated solely for the convenience of the County and related contract entities. The County does not warrant the accuracy of this information, and no decision involving a risk of economic loss or physical injury should be made in reliance thereon.

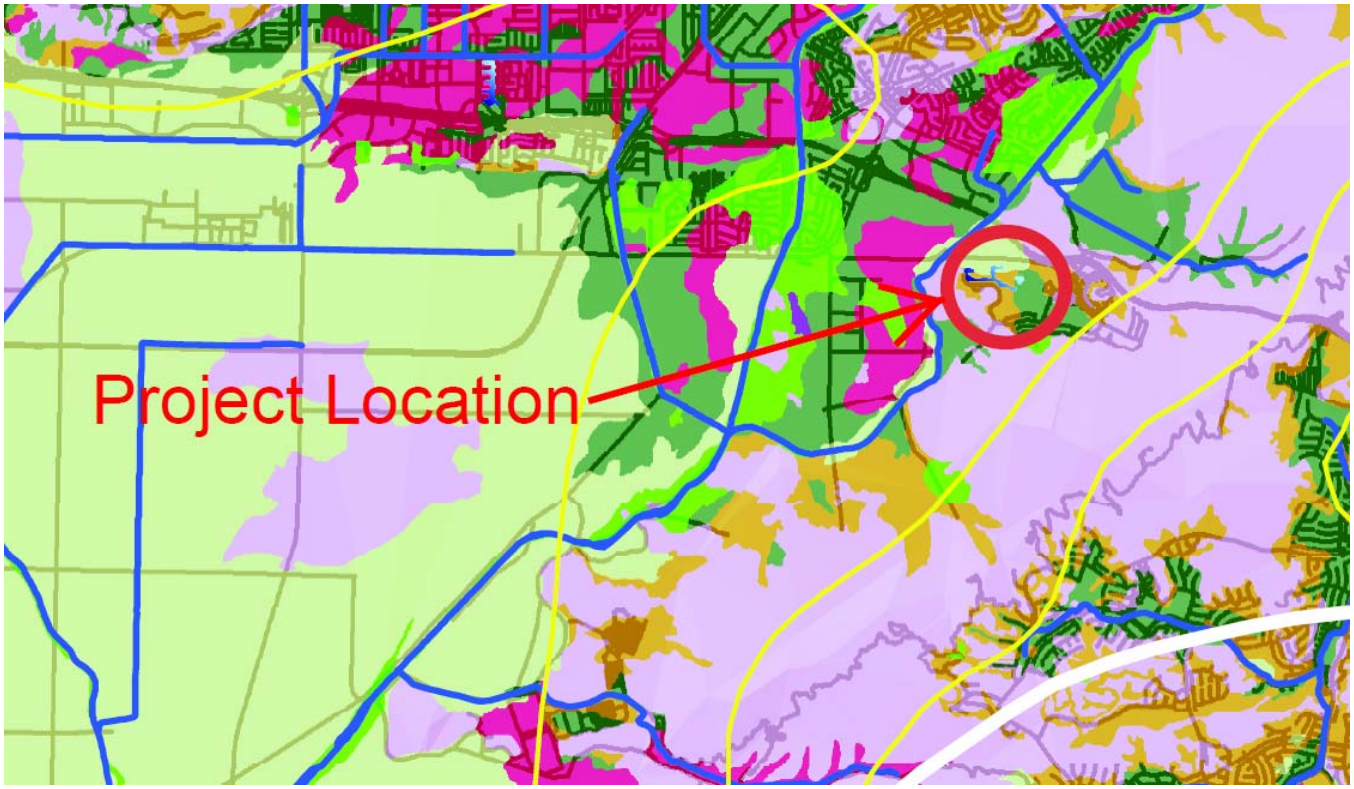

Ventura County Soil Numbers

1

2

3

4

5

6

7

National Flood Hazard Layer FIRMette

FEMA

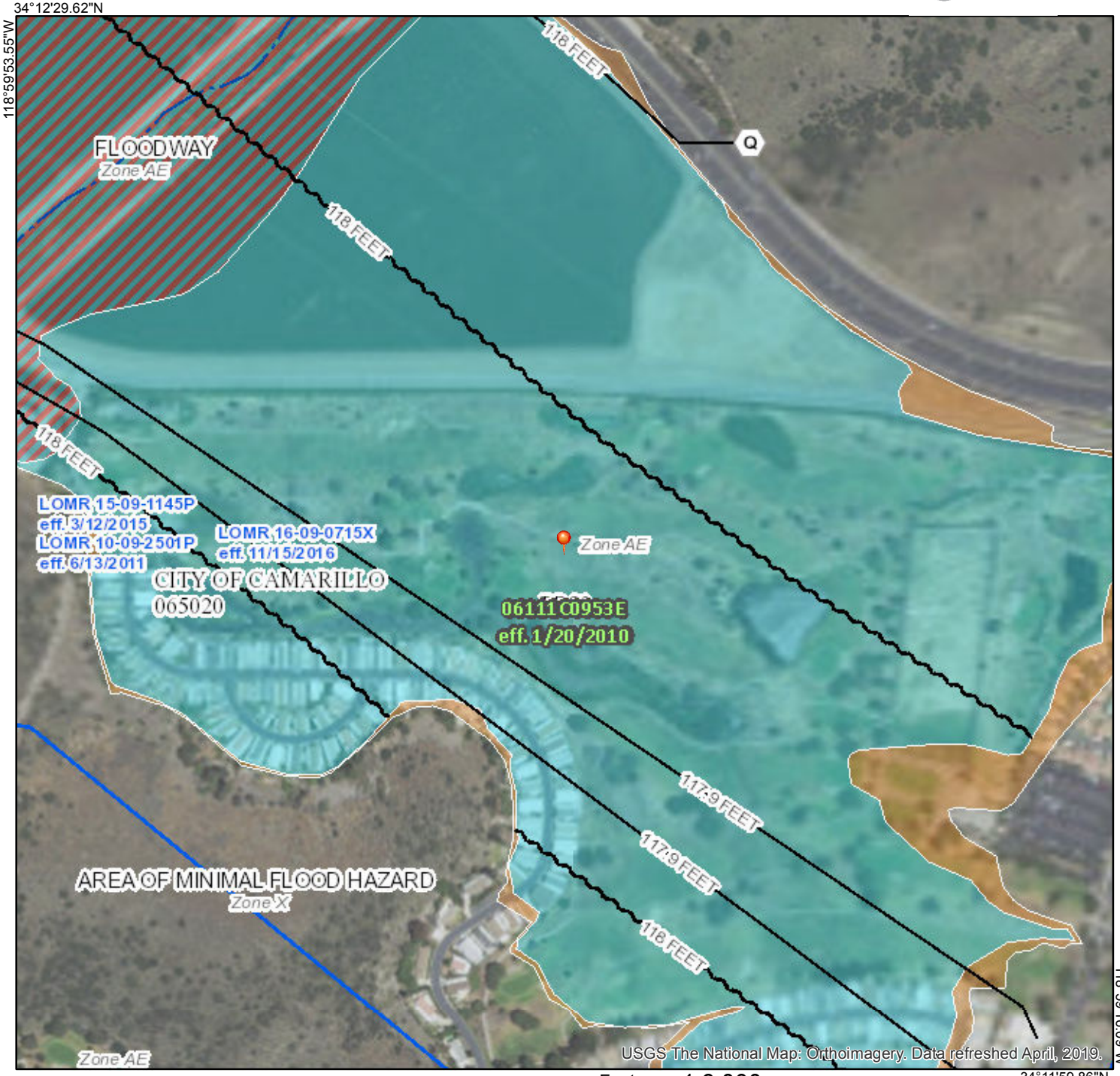

Legend

SEE FIS REPORT FOR DETAILED LEGEND AND INDEX MAP FOR FIRM PANEL LAYOUT

SPECIAL FLOOD HAZARD AREAS
- Without Base Flood Elevation (BFE) *Zone A, V, A99*
- With BFE or Depth *Zone AE, AO, AH, VE, AR*
- Regulatory Floodway

OTHER AREAS OF FLOOD HAZARD
- 0.2% Annual Chance Flood Hazard, Areas of 1% annual chance flood with average depth less than one foot or with drainage areas of less than one square mile *Zone X*
- Future Conditions 1% Annual Chance Flood Hazard *Zone X*
- Area with Reduced Flood Risk due to Levee. See Notes. *Zone X*
- Area with Flood Risk due to Levee *Zone D*

OTHER AREAS
- NO SCREEN Area of Minimal Flood Hazard *Zone X*
- Effective LOMRs
- Area of Undetermined Flood Hazard *Zone D*

GENERAL STRUCTURES
- Channel, Culvert, or Storm Sewer
- Levee, Dike, or Floodwall

OTHER FEATURES
- 20.2 / 17.5 Cross Sections with 1% Annual Chance Water Surface Elevation
- Coastal Transect
- 513 Base Flood Elevation Line (BFE)
- Limit of Study
- Jurisdiction Boundary
- Coastal Transect Baseline
- Profile Baseline
- Hydrographic Feature

MAP PANELS
- Digital Data Available
- No Digital Data Available
- Unmapped

N

The pin displayed on the map is an approximate point selected by the user and does not represent an authoritative property location.

This map complies with FEMA's standards for the use of digital flood maps if it is not void as described below. The basemap shown complies with FEMA's basemap accuracy standards

The flood hazard information is derived directly from the authoritative NFHL web services provided by FEMA. This map was exported on 8/26/2019 at 12:02:05 AM and does not reflect changes or amendments subsequent to this date and time. The NFHL and effective information may change or become superseded by new data over time.

This map image is void if the one or more of the following map elements do not appear: basemap imagery, flood zone labels, legend, scale bar, map creation date, community identifiers, FIRM panel number, and FIRM effective date. Map images for unmapped and unmodernized areas cannot be used for regulatory purposes.

Camarillo Springs Golf Course

Master Drainage Plan / FEMA Conditional Letter of Map Revision

October 2018

Prepared For:

NUWI Camarillo LLC
1733 Ocean Avenue, Suite 350
Santa Monica, CA 90401
310-394-3379



Prepared By:

PACE
Advanced Water Engineering

Pacific Advanced Civil Engineering, Inc.
17520 Newhope Street, Suite 200
Fountain Valley, CA 92708
714-481-7300





Contact Persons:
Mark E. Krebs, PE
Jenny M. Robinet, PE
Andrew Ronnau, PE, Ph.D

PACE JN #B306

Table of Contents

1 Introduction 1-1
1.1 Project Description 1-1
1.2 Master Drainage Plan Objectives 1-1
1.3 FEMA Flood Hazards 1-2
1.3.1 Effective FEMA FIRM Panels 1-2
1.3.2 Effective FEMA Hydraulic Models 1-3
1.4 Previous Studies 1-3

2 Watershed Descriptions 2-1
2.1 Regional Watershed – Conejo Creek 2-1
2.2 Local Watershed – Camarillo Springs Creek Local Watershed 2-1
2.2.1 Existing Condition 2-1
2.2.2 Proposed (Project) Condition 2-1

3 Hydrology 3-1
3.1 Regional Hydrology – Conejo Creek 3-1
3.1.1 United States Army Corps of Engineers Study 3-1
3.1.2 Countywide Study 3-1
3.1.2.1 Areal Reduction 3-1
3.1.3 FEMA Flood Insurance Study (FIS) 3-1
3.1.4 Updated LOMR Hydrology 3-1
3.1.4.1 Hydrograph “Fattening” 3-2
3.2 Local Hydrology – Camarillo Springs Creek 3-2
3.2.1 Design Hydrology for Regional Floodplain Analysis 3-2
3.2.2 Project Site Hydrology 3-3
3.2.2.1 VCRat Hydrographs for Proposed Hydraulics 3-3
3.2.2.2 Local Sediment Production 3-3

4 Hydraulic Analysis: Floodplain Mapping 4-1
4.1 Regional Hydraulic Analysis – HEC-RAS 2D 4-1
4.1.1 Program Information 4-1
4.1.2 Model Input Parameters 4-1
4.1.3 Model Conditions 4-2
4.1.4 Model Results 4-2

5 Hydraulic Analysis: Flood Storage and Conveyance 5-1
5.1 Local Hydraulic Analysis – XPSWMM Model 5-1
5.1.1 XPSWMM Model Program 5-1
5.1.2 Model Input Parameters 5-1
5.1.3 Model Configuration 5-2
5.1.4 Model Results 5-3

6 Conclusions 6-1
6.1 Floodplain Mapping Impacts 6-1
6.2 Flood Storage Results 6-1
6.3 FEMA Conditional Letter of Map Revision 6-1

Tables

Table 3-1 100-Year Flowrates 3-2
Table 4-1 Manning’s Roughness Values per Land Use 4-2
Table 4-2 Computation Settings for HEC-RAS 2D Models 4-2
Table 5-1 Input Values for XPSWMM Model 5-2

Figures

Figure 1: Vicinity Map
Figure 2: Proposed Site Plan
Figure 3: Existing FEMA Floodplain
Figure 4: Camarillo Springs/Conejo Creek Watersheds
Figure 5: Proposed Condition Drainage Map
Figure 6: Proposed Storage Volume Balance
Figure 7: Conejo Creek HEC-RAS 2D Model Study Limits
Figure 8: HEC-RAS 2D Existing Condition Flow Depth
Figure 9: HEC-RAS 2D Proposed Condition Flow Depth
Figure 10: HEC-RAS 2D Flow Depth Differential
Figure 11: HEC-RAS 2D Existing Condition Velocity
Figure 12: HEC-RAS 2D Proposed Condition Velocity
Figure 13: HEC-RAS 2D Velocity Differential
Figure 14: Existing Flood Storage
Figure 15: Proposed Flood Storage
Figure 16: XPSWMM Model Configuration

Appendices

A. FEMA CLOMR Documents
a. MT-2 Forms
b. FIRM Panels
c. Annotated FIRM

B. Existing Hydrology
a. Conejo Creek VCRat Output
b. FEMA Model Unsteady Flow Hydrograph Input

C. Proposed Hydrology
a. Adjusted Proposed Hydrograph for Proposed Condition
b. Project Site VCRat Output

D. XPSWMM Model Results (Table)

E. Project Site Storage Volume
a. Main Golf Course Area
b. East Basin at Culvert Inlet
c. South StorageArea

Enclosures

- Tentative Tract Map
- HEC-RAS Models (Existing and Proposed)
- XPSWMM Model (Project Configuration)

1 Introduction

The following ***Master Drainage Plan / Conditional Letter of Map Revision (MDP/CLOMR)*** for the Camarillo Springs Golf Course is a comprehensive watershed planning document that describes the current regional and onsite watershed hydrology and floodplain hydraulics as well as the changes resulting from the proposed Camarillo Springs Golf Course project. The study also includes analysis and comparisons of the existing condition (current) and proposed condition (with project) regional level floodplain mapping and hydraulics related to the Federal Emergency Management Agency (FEMA) published floodplain maps.

1.1 Project Description

The existing Camarillo Springs Golf Course is located in the City of Camarillo, CA in southeastern Ventura County (*Figure 1*) It is nestled in small tributary canyon/valley, in between the Conejo Creek and the Santa Susana Mountains. The proposed planned project development is an approximately 32-acre residential area located within the current Camarillo Springs Golf Course property boundary. The development will include neighborhood parks, recreation, walking trails, open space and housing while still preserving golf at Camarillo Springs.

The project site is directly bordered on the north by Ridge View Street, and on the east by existing golf course facilities and residential along Camarillo Springs Road (*Figure 2*). Conejo Creek, which is about 1,000-ft to the west of the project site, curves slightly around to the south making its way down to Calleguas Creek. The proximity to Conejo Creek at the site location as well as the runoff tributary to Conejo Creek from Camarillo Springs Wash results in the existing onsite flood hazards, which will be alleviated by the proposed project development's flood protection and conveyance system.

The project flood protection system will consist of elevating the proposed 32-acre development area to be a flood protection barrier along the northern boundary of the site. This will eliminate the Conejo Creek floodplain impact to the existing main area Camarillo Springs Golf Course, including approximately 153 existing residences adjacent to the golf course. Additionally, a culvert will be installed beneath the raised development to convey runoff from the upper reaches of the Camarillo Springs Wash watershed to Conejo Creek while using the remaining undeveloped golf course area as flood storage for watershed runoff peak flow attenuation.

1.2 Master Drainage Plan Objectives

The primary objective of the MDP is to provide planning and design level guidance to identify and clarify the proposed project's regional and local level drainage measures to ensure the appropriate level of flood protection within the study area. In coordination with JDS Civil, who has prepared the Tentative Tract Map for the project development, a flood conveyance and storage system has been developed which will address both the floodplain hydraulics and the flood storage capacity of the project site.

The MDP builds on the ***Baseline Watershed Hydrology and Floodplain Hydraulics Study***, previously submitted to the Ventura County Watershed Protection District (VCWPD), and addresses comments provided by VCPWD after their review. The following report describes the detailed technical comparative engineering analyses for the existing and proposed project watershed hydrology and floodplain hydraulics. The objectives of the MDP include the following:

Hydrology

1. *Review previous regional hydrology studies for the Conejo Creek watershed.*
2. *Define an approved 100-year Conejo Creek hydrograph and peak discharge (FEMA Effective Model VCRat Flow Hydrograph).*
3. *Define the existing condition 100-year hydrology for the local Camarillo Springs watershed (FEMA Effective Model VCRat Flow Hydrograph).*

4. *Validate the local watershed hydrology analysis results for both peak flowrate and runoff volume using different methods for comparison.*
5. *Determine the proposed condition 100-year hydrology for the local Camarillo Springs watershed, including the proposed project development flood storage and conveyance system.*

Hydraulics – Floodplain Mapping

1. *Create a two dimensional hydraulic model using HEC-RAS 2D to analyze the impact of the proposed project on floodplain hydraulics.*
2. *Develop an existing condition 100-year floodplain two dimensional hydraulic model for Conejo Creek in HEC-RAS 2D which covers the Camarillo Springs Golf Course floodplain area.*
3. *Prepare a proposed condition HEC-RAS 2D model using proposed condition hydrology and proposed project development site grading changes.*
4. *Develop 100-year floodplain mapping exhibits to evaluate existing 100-year flow depth and velocity distributions within and around the Camarillo Springs Golf Course area.*
5. *Develop 100-year floodplain mapping exhibits to evaluate proposed project 100-year flow depth and velocity distributions within and around the Camarillo Springs Golf Course area to evaluate potential offsite impacts.*

Hydraulics – Project Site Storage and Conveyance

1. *Analyze the 100-year floodplain volume storage capacity in existing and proposed conditions and provide compensatory storage for the storage removed for the project development.*
2. *Develop a hydraulic model in XPSWMM to evaluate the project development culvert conveying runoff from upper portions of the Camarillo Springs Wash Watershed to Conejo Creek.*
3. *Evaluate the golf course lake for the purposes of flood storage from adjacent hillside runoff and project development runoff.*
4. *Determine the amount of storage necessary on the property in the south existing golf area.*

1.3 FEMA Flood Hazards

The project is within the City of Camarillo in the County of Ventura, and since both the City and the County are participants in the National Flood Insurance Program (NFIP), there are published flood hazard maps of floodplains in and around the Camarillo Springs Golf Course. A large part of the proposed project involves providing flood relief for residents living near the golf course, and establishing a revised 100-year floodplain within the property boundary. The revised boundary removes more than 150 homes from FEMA flood hazard zones, as shown on *Figure 3*.

1.3.1 Effective FEMA FIRM Panels

FEMA publishes Flood Insurance Rate Maps (FIRMs) that identify flood hazards associated with a base flood that has a 1% probability (100-year return period) of being equaled or exceeded in any given year. The current published flood hazard mapping for this project area is covered on FIRM Panels 06111C0934E and 06111C0953E, each with an effective date of January 20, 2010. In addition, the published flood hazard information is available in Geographic Information System (GIS) format, referred to as DFIRM data, which is updated with current projects that have not yet been incorporated on the published FIRM panels. For example, two Letter of Map Revision (LOMRs) in this area that were approved in 2015 were not included on the published FIRM Panels, but they are included in the DFIRM data. *Figure 3* shows the current DFIRM flood hazard mapping for this area. The full FIRM Panels are included in *Appendix A*. FEMA also provides a Flood Insurance Study (FIS), which encompasses all of Ventura County and its cities, including Camarillo. The study has an effective date of January 7, 2015.

1.3.2 Effective FEMA Hydraulic Models

The present study reach of Conejo Creek is covered by three effective FEMA hydraulic models. The first model is for 100-year floodplain mapping and covers the upstream portion of the study reach, from XS 54749 to XS 51491.The model is an unsteady flow analysis incorporating volumetrically calibrated VCRat hydrology. It was originally part of a Letter of Map Revision (LOMR) prepared by PACE and approved by FEMA in 2015. A second model, which is also part of the LOMR approved by FEMA in 2015 and covers the upstream portion of the study reach, is a steady state model and provides 10-yr, 50-yr and 500-yr water surface elevations and flow extents. The third model covers the downstream portion of the study reach, from XS 51258 to XS 48073. It is a steady state model using VCRat peak flowrates from a VCWPD Watershed Hydrology Study of Calleguas Creek, which includes Conejo Creek. It has 10-yr, 50-yr, 100-yr and 500-yr water surface elevations and flow extents.

1.4 Previous Studies

There have been numerous studies performed within the Calleguas and Conejo Creek Watersheds in regards to hydrology, hydraulics, sediment transport that have useful baseline information related to the current floodplain/watershed conditions for the Camarillo Springs Golf Course area. The following list includes recent studies in the area related to Hydrology and Hydraulics.

Calleguas Creek Watershed Feasibility Study (USACE, 2003)

The feasibility study was a complete regional watershed analysis of the Calleguas Creek basin and existing facilities, focusing on determining peak discharges and hydrographs for Calleguas Creek tributaries as well as sediment transport for environmental impacts.

Calleguas Creek Watershed Hydrology Study using VCRat (VCWPD, 2003)

VCWPD developed a complete regional watershed model of the Calleguas Creek system, including Conejo Creek and Revolon Slough, using the Ventura County Modified Rational Method (VCRat).

Calleguas Creek Watershed Management Plan (2004)

The Watershed Management Plan was a collaborative effort between local government and community agencies to create a cooperative strategy for resource management and protection.

Preliminary Ventura County Flood Insurance Study (Nolte Associates Inc., 2015)

In 2004, Nolte Associates Inc. competed a draft publication of the Ventura County Flood Insurance Study (FIS) for the Federal Emergency Management Agency (FEMA). The publication went through an initial public review process, then became effective in January 2010. It went through additional review/revisions before becoming most recently effective in January 2015.

Calleguas Creek Letter of Map Revision (PACE, 2015)

In 2014, PACE completed a Letter of Map Revision (LOMR) based on a previous Conditional Letter of Map Revision for portions of Calleguas Creek near the 101 Freeway crossing. The LOMR, which FEMA approved in 2015, included a comprehensive hydraulic analysis of the creek and overbank areas.

2 Watershed Descriptions

The Camarillo Springs Golf Course project is located within the local Camarillo Springs Creek, tributary to Conejo Creek and within the overall Calleguas Creek Watershed (*Figure 4*). Descriptions of the regional and local watersheds are provided.

2.1 Regional Watershed – Conejo Creek

The Conejo Creek watershed, located within the larger Calleguas Creek Watershed, has numerous foothills, canyons and ridges, with well-defined stream courses and relatively flat areas. The watershed near the project location drains approximately 76 square miles and includes portions of three major urban areas: Simi Valley, Thousand Oaks and Camarillo. The headwaters of Conejo Creek begin in the western range of the Santa Monica Mountains before the creek meanders past various urban and agricultural areas before joining with Calleguas Creek. Portions of the Conejo Creek channel have been improved to increase creek capacity and to reduce the impact of flood hazards on adjacent properties. However, the portion of Conejo Creek directly adjacent to the Camarillo Springs Golf Course area does not have 100-year hydraulic capacity, so the existing floodplain extends beyond the main creek, into the Camarillo Springs Golf Course. In addition to Conejo Creek overbank flooding, the Camarillo Springs Wash tributary passes through the golf course before joining with Conejo Creek, resulting in a convergence of flows.

2.2 Local Watershed – Camarillo Springs Creek Local Watershed

2.2.1 Existing Condition

The local offsite drainage area directly tributary to the Camarillo Springs Golf Course is approximately 1.7 square miles, which includes the development planning area itself. The watershed begins in the Conejo Mountains, immediately south and east of the Golf Course, where the headwaters of Camarillo Springs Creek and its tributary are located. Camarillo Springs Creek travels through narrow canyons and around steep ridges in the mountains before crossing beneath North San Como Lane and into a neighborhood park. This first main reach of the creek winds through the park, joined by runoff from adjacent residential developments, before passing under Irena Ave onto the Camarillo Springs Golf Course. On the golf course, the next reach of Camarillo Springs Creek is along narrow drainage ditches and shallow open space, as stormwater runoff from adjacent residential areas connects with the creek, before it passes below Camarillo Springs Road through the golf cart path tunnel onto another section of the golf course. The third section of the creek enters a drainage ditch that wraps around golf course facilities before entering the lake system on the southwest edge of the project. Along the way, runoff from residential areas to the south of the golf course enter the creek across the open space. The final reach of the creek is through a series of lakes to the southwest of the proposed project development, with runoff from the existing development east of the driving range also making its way to the creek The creek then passes through a culvert which outlets into Conejo Creek, just downstream of the Ridge View Street crossing.

2.2.2 Proposed (Project) Condition

The local Camarillo Springs Creek tributary area would essentially be divided into three primary drainage areas, as shown in *Figure 5*:

(1) Upper Camarillo Springs Watershed, 820 acres – drains to a proposed culvert that begins east of Camarillo Springs Road and leads to Conejo Creek; overflow passes into a ponded lake area to the west of the road.
(2) South Adjacent Lower Camarillo Springs Watershed, 140 acres – drains to the ponded lake area ("lake storage") where the current lake system is located, includes runoff from the project development.
(3) East Adjacent Lower Camarillo Springs Watershed, 120 acres – drains to the golf course area on the northeast corner of the property near the driving range, includes remaining runoff from the project development; earthen swales and a pipe convey these flows to Conejo Creek.

While some flow would be stored on the golf course within the "lake storage," the remaining flow would reach Conejo Creek through the culvert and around the north edge of the development. Additionally, the Camarillo Springs Golf Course project development includes water quality features and best management practices which would limit any increase in runoff from the site as compared to existing conditions.

3 Hydrology

3.1 Regional Hydrology – Conejo Creek

As described in Section 1.4, there have been numerous hydrologic studies for Conejo Creek in the vicinity of the project. Each study has a slightly different approach to producing an appropriate hydrograph for the creek, both in terms of rainfall patterns and runoff volumes. The Ventura County Watershed Protection District (VCWPD), based upon review of the recent project baseline study, has directed use of a conservative approach with simultaneous rainfall peaks for the Camarillo Springs Golf Course project design. *Table 3-1* provides a comparison of 100-year peak flowrates from various study outputs, and notes which flowrate was used for the present drainage study.

3.1.1 United States Army Corps of Engineers Study

In February 2003, The United States Army Corps of Engineers, in cooperation with VCWPD, prepared a comprehensive study of Calleguas Creek, which included its tributaries – notably Conejo Creek. The study, entitled "*Calleguas Creek Watershed Feasibility Study*," provided rainfall-runoff models for estimating peak flowrates and hydrographs at key locations, including just upstream of the proposed project development at the Highway 101 crossing of Conejo Creek. The study used HEC-HMS modeling with extensive land use, precipitation, streamflow, and soil data. The 100-year storm event (1% annual chance) hydrograph produced for Conejo Creek 100-year peak flowrate is shown in *Table 3-1*.

3.1.2 Countywide Study

In March 2003, a Countywide study, initiated by Federal Emergency Management Agency (FEMA) and in cooperation with the USACOE, was prepared by VCWPD entitled "*Calleguas Creek Watershed Hydrology Study*." The study included Modified Rational Method peak flowrate determinations and hydrographs for the entire Calleguas Creek Basin. Peak flowrates for the Conejo Creek watershed for the 10-year, 50-year, 100-year, and 500-year floods were obtained from this study report for FEMA floodplain mapping.

3.1.2.1 Areal Reduction

The steady state effective FEMA model has peak flow results that were modified using areal reduction factors to account for spatial variability in rainfall. Peak flows for other storm frequencies were calculated based on multipliers developed by the VCWPD from stream gage information in the watershed. The Areal Reduction factors for Conejo Creek were obtained by the curves generated by VCWPD as a part of their countywide hydrology study. Table 3-1 provides a summary of the areal reduced 100-year VCRat flowrate in Conejo Creek near the project site.

3.1.3 FEMA Flood Insurance Study (FIS)

The effective Flood Insurance Study, dated April 2018, shows peak flowrates for Conejo Creek which are lower than those obtained from the USACOE and VCPWD Countywide studies. *Table 3-1* provides a basis of comparison between the effective FIS flow rates and the various study flowrates. Peak flowrate values for the 100-year storm event, as well as the 10-year, 50-year and 500-year (10%, 2%, and 0.2% respectively) storm events are provided in the FIS.

3.1.4 Updated LOMR Hydrology

As part of the 2015 LOMR prepared by PACE and approved by FEMA in 2015, the VCRat 100-year Conejo Creek watershed model was revised, with guidance from VCWPD staff, in order to develop a hydrograph model with an accurate yield and shape (distribution of volume) acceptable to VCWPD, specifically to accommodate storage in overbank areas.

3.1.4.1 *Hydrograph "Fattening"*

The shape of the unit hydrographs developed using the Ventura County modified rational method do not necessarily generate the correct effective runoff volume or net rainfall since the cumulative mass rainfall curves are averaged. The expected runoff yield based upon local point or isohyetal rainfall data compared to the computed runoff yield from the modified rational hydrograph was adjusted in the 2015 PACE LOMR to provide the same effective rainfall. This process is known as "hydrograph fattening" and the adjustment results in modification to the shape of the calculated runoff hydrograph so that the area under the hydrograph provides the desired effective or net rainfall volume. The volume of direct runoff is a critical factor for storage routing analysis. This fattening factor is a local requirement of VCWPD to perform storage routing.

Since the overbank areas along Conejo Creek were treated as ineffective flow areas in the HEC-RAS floodplain hydraulic model, all the hydrographs utilized in the HEC-RAS model were fattened in the 2015 LOMR FEMA Effective HEC-RAS model. Ineffective flow areas account for the volume of water stored/ponded in the cross section but are not included as part of the main conveyance area. Therefore, the volume of water in the ineffective area is an important factor for evaluating floodplain characteristics. Near the Camarillo Springs Golf Course project, the fattening factor (yield factor) for Conejo Creek from the LOMR study was determined using the SCS method for calculating a watershed yield for the entire Conejo Creek watershed. A fattening factor of 4.66 was applied to the volume under a VCRat generated hydrograph. *Table 3-1* shows the before and after fattening VCRat hydrograph peak flowrates (previous and current effective FEMA). See *Appendix B* for fattening factor VCRat model output.

Table 3-1 100-Year Flowrates

	USACOE (HEC-HMS)	VCWPD (VCRat, near project)	Flood Insurance Study	Previous Effective FEMA (Ventura VCRat)	Current Effective FEMA (VCRat)
100-year Peak Flowrate	22,500 cfs	22,987 cfs	22,000 cfs	23,070 cfs	**23,097 cfs***

**used for present study*

3.2 Local Hydrology – Camarillo Springs Creek

3.2.1 *Design Hydrology for Regional Floodplain Analysis*

The Countywide 2003 study, and subsequently the effective FEMA HEC-RAS models, provided lateral flow hydrographs entering Conejo Creek along the study reach downstream of the initial Conejo Creek inflow hydrograph. Lateral flows entering Conejo Creek include those from the Camarillo Springs Creek, the East Camarillo Drain, the Oak Grove Channel, and Upland Road Drain. At each of the tributaries, there is a node in the Countywide study where a hydrograph is calculated, and fattening factor for each of the hydrographs for input in the effective FEMA HEC-RAS model from the 2015 LOMR. The existing condition HEC-RAS 2D model has flows (initial and lateral) entering Conejo Creek at the same locations as in the effective FEMA one dimensional HEC-RAS model.

The proposed condition HEC-RAS 2D model has all the same hydrographs as the existing condition model, except for the hydrograph entering Conejo Creek downstream of Ridge View Street. This hydrograph encompasses the Camarillo Springs Creek drainage area, as well as additional surrounding agricultural land and mountainside runoff. The proposed condition hydrograph assumes that the same amount of runoff still flows to Conejo Creek at this inflow location, except for what is retained in the lake storage area. To account for storage provided within the lake area of the golf course as the storm peak passes, the hydrograph at Ridge View Street was scaled by a ratio of new runoff volume (original minus lake storage volume) divided by the original runoff volume. *Appendix C* has the adjusted hydrograph at Ridge View Street that was used for the proposed condition model.

3.2.2 Project Site Hydrology

3.2.2.1 VCRat Hydrographs for Proposed Hydraulics

As shown in *Figure 6*, there are three main drainage areas to the project site. Hydrographs were generated in the VCRat software program for all three: the area that drains to the culvert, with overflows to lake storage (Upper Camarillo Springs Creek Watershed), the area that drains to lake storage (South Adjacent Lower Camarillo Springs Creek Watershed and South Project Development), and the area that drains to the north, near the driving range, before making its way to Conejo Creek through earthen swales and a pipe (East Adjacent Lower Camarillo Springs Creek Watershed and East Project Development). The hydrographs for each of these areas were provided by JDS Civil based on a joint watershed delineation effort between PACE and JDS Civil. The hydrograph output tables are in *Appendix C*. Peak flowrates and volumes are noted on *Figure 6*.

3.2.2.2 Local Sediment Production

To accommodate potential sediment and debris, calculations were prepared to quantify the amount from the Upper Camarillo Springs Watershed that may gather within the East Basin, an intake area at the upstream end of the culvert and golf. The intake area for the 10x6 RCB bypass culvert is at the upstream end of the existing 10x7 RCB golf cart tunnel. The proposed design will add storage area, below the culvert invert, to allow storage for transported debris from the upstream watershed. The area is not designed as a debris basin, rather, the intent is to minimize any sediment that enters the bypass culvert and will add debris capture for sediment that would otherwise be transported to the lower golf course area.

The potential debris production on the upstream watershed was calculated following the methodology described in the 2005 Ventura County report, Debris and Detention Basins. The report calculates debris production using a regression equation from a 1978 USGS publication, Erosion and Sediment Yields in the Transverse Ranges. The calculation relates debris production on a watershed to five significant parameters.

$$S_y = 1.244 + 0.828\ Log(A) + 1.382\ Log(ER) + 0.375\ Log(SF) + 0.251\ Log(FF) + 0.840\ Log(K)$$

A is the watershed area in mi^2.

ER is the elongation ratio, defined as the ratio of the diameter of a circle with the same area as the watershed to the length of the main channel of the watershed.

SF is the acres of slope failure per square mile of watershed. This value is established using a slope failure map GIS layer from the California Department of Conservation.

FF is the fire factor, is a parameter related to the recovery of vegetative cover and the time elapsed following a fire that denudes the watershed. The value of FF ranges from 88, six months after a burn, to 20, 4.5 years after a burn, to 1, 7.5 years after a burn. The parameter is used to quantify the likelihood that the design debris producing event occurs immediately following a complete watershed burn.

K is the precipitation factor, defined as the 10-day precipitation multiplied by the 24-hour precipitation squared. These values are obtained from the NOAA Atlas 14 data set for the location of the Camarillo Springs watershed.

To provide an envelope of possible values to the calculation, two different conditions were analyzed. The sediment production was calculated for current conditions with no recent burn, and the statistically uncertain conditions presented in the 1978 USGS publication. The calculations, by hand, are shown in *Appendix C*.

Note that the calculated values represent a statistical worse case situation for the quantity of debris that could possibly be produced on the watershed. The calculation does not reflect the ability of the watershed to transport the debris to the watershed outlet. The calculation does not account for intermediate storage and entrapment of any of that debris at local depressions and features within the watershed.

4 Hydraulic Analysis: Floodplain Mapping

Initially, hydraulic calculations and analyses were performed with the two-dimensional floodplain software program FLO-2D. However, in the interest of providing a refined model, relating to FEMA modeling efforts and incorporating the recent addition of two-dimensional capabilities, HEC-RAS 2D was used to create a duplicate of the effective model (existing condition) as well as a project (proposed condition) model.

4.1 Regional Hydraulic Analysis – HEC-RAS 2D

4.1.1 Program Information

HEC-RAS 2D is a computer modelling software developed by the U.S. Army Corps of Engineers (ACOE). It builds on the one-dimensional rigid boundary HEC-RAS hydraulic model, which assumed an immobile channel bed. HEC-RAS 2D can complete 1D steady or unsteady flow computations, a 2D unsteady flow computation, or a combination 1D/2D flow computation. The two-dimensional component of HEC-RAS allows the model the capability to simulate diverse types of floods within a full network of natural and constructed channels, including river overbank flooding, alluvial fan flooding, and urban flooding. It is a volume conservation model in the sense that it distributes a flood hydrograph over a system of square grid elements representing overland flow and channel routing. The model can be used for predicting the area of inundation and flood wave attenuation for a passing hydrograph, delineating flood hazards, regulating floodplain zoning, or designing flood mitigation. HEC-RAS 2D includes components for simulating mixed flow regimes, sediment transport, water quality analysis/transportation, and spatially variable rainfall/infiltration. The model is often used by engineers, floodplain managers, and agencies like FEMA, which has it listed as one of the approved hydraulic models for riverine studies.

4.1.2 Model Input Parameters

The input parameters for the model follow the guidelines of the HEC-RAS Two Dimensional Modeling User's Manual (v5.0) and the HEC-RAS Supplemental User's Manual (v5.0.4). The input variables were adjusted to match the conditions of the project area.

Topographic Data

The topographic data was provided by the County of Ventura and covers the entire reach of Conejo Creek from the creek's confluence with Calleguas Creek upstream to near the Upland Road Drain. The digital LiDAR topographic mapping data was flown by the County of Ventura in July 2013, and is high resolution LiDAR with a 10-ft x 10-ft grid resolution. The vertical accuracy was 9.25 cm. The digital topographic data, used to generate a TIF (Tagged Image File) which stores raster information, was applied as the terrain for computations in the HEC-RAS 2D Model. Two terrains, existing condition (unchanged) and proposed condition (with proposed grading) were used in the models.

Model Extents

The model of Conejo Creek extends from approximately 4,250 ft upstream of Highway 101 downstream to a point just upstream of the junction between Conejo Creek and Calleguas Creek. Approximately 18,800 ft of Conejo Creek is modelled in the 6.7 sq mi 2D flow area (*Figure 7*).

Hydrologic Data

As described in Section 3, the hydrographs for the HEC-RAS 2D model were obtained from the Effective FEMA HEC-RAS (unsteady state) model.

Land Use/Manning's Roughness

Land use data was obtained from the U.S. Geological Survey National Land Cover Database (2011). The land use information was used to define manning's roughness in the overbanks of the model. Manning's n values associated with each land use were obtained from the HEC-RAS 2D Modeling User Manual (US Army Corps of Engineers, 2016) and Open Channel Hydraulics (Ven Te Chow, 1959). *Table 4-1* provides a list of Manning's roughness values used in the 2D model.

Table 4-1 Manning's Roughness Values per Land Use

Land Cover Definition	Manning's n
Open water	0.035
Developed, Open Space	0.040
Developed, Low Intensity	0.080
Developed, Medium Intensity	0.065
Developed, High Intensity	0.120
Barren Land	0.025
Deciduous Forest	0.100
Mixed Forest	0.100
Shrub/Scrub	0.070
Grassland/Herbaceous	0.025
Pasture/Hay	0.030
Cultivated Crops	0.035
Woody Wetlands	0.065
Emergent Herbaceous Wetlands	0.065

Manning's roughness values in the channel were calibrated so the existing condition model's water surface elevations matched the effective FEMA BFEs. Manning's n values vary horizontally along the channel and range from 0.035 to 0.08.

Boundary Conditions

A flow hydrograph was specified as the upstream boundary condition for the model, while the downstream boundary condition is a normal depth condition. Flow hydrographs were also specified as internal boundary conditions to define lateral inflow in the channel.

Computational Values

Computation settings utilized in the HEC-RAS model are summarized in *Table 4-2*.

Table 4-2 Computation Settings for HEC-RAS 2D Models

Computation	Setting
Computation Interval	3 seconds
Simulation Time	26 hours
Overbank Grid Cell Size	50 ft by 50 ft
Channel Grid Cell Size	15 ft by 15 ft
Number of Grid Cells	Approx. 88,000

4.1.3 Model Conditions

HEC-RAS 2D was used to analyze two floodplain conditions: the existing condition (no project) and the proposed condition (with project). The only differences between the existing condition model and the proposed condition model are:

(1) lateral inflow hydrograph downstream of Ridge View Street (as described in Section 3);
(2) proposed grading incorporated in proposed condition terrain for main golf course area property; and
(3) proposed grading incorporated in proposed condition terrain for south golf course area property
The proposed grading on the main golf course property incorporates the raised project development, resulting in a barrier protecting the inside golf course area. The proposed grading on the south golf course property provides additional flood volume storage, as described in Section 5.

4.1.4 Model Results

The results of the existing conditions and the proposed conditions HEC-RAS 2D models were extracted to make flow depth exhibits, velocity exhibits, and differential comparison exhibits. The results of the HEC-

RAS 2D models are presented in Figures 8 through 13. The existing and proposed conditions flow depth exhibits depict the deepest flow depth that occurs for each HEC-RAS 2D element at any time in the design storm analysis. The flow depth exhibits also depict the greatest extents of the surface water during the design storm. As can be seen by comparing the flood depth exhibits for the existing and proposed conditions, the peak flow depths do not change significantly on properties upstream or downstream of the project, or on the properties west of the project on the other side of Conejo Creek. Marginal changes to the floodplain boundary are not detectable at the FEMA map scale.

When comparing the existing and proposed conditions flow depth exhibits, changes to the flow depths and extents can be seen within the Camarillo Springs project site. The changes within the main Camarillo Springs Golf Course area reflect the onsite floodplain storage of flow generated on the local watershed, showing a reduction in the peak WSEL and a pull back of the 100-year floodplain from the over 150 residential homes along the southern edge of the golf course. An additional change on the property is the increased overbank floodplain storage depth in the south area golf course. The floodplain depth differential exhibit shows the grid average floodplain depth differential. To account for dynamic model transients (numerical waves) and for model precision on the 50-foot grid cell elements, the flow depth differentials exhibit shows differences that are 3 inches and larger.

The existing and proposed conditions flow velocity exhibits depict the grid averaged velocity at the peak of the hydrographs. The velocity results indicate that there is minimal change between the existing condition and the proposed condition, except certain locations on the project property. The velocity differential in shows the grid average velocity depth differential. To account for model precision on the 50-foot grid cell elements, the flow velocity differentials exhibit shows where the flow velocity has increased by 6 inches per second or more, resulting in a proposed conditions velocity that is 3 feet per second or more. The differentials exhibit shows less velocity on the main golf course area near the project development site. The south area golf course has increased flow velocities on the project property, where flows in the creek first enter the available overbank storage.

5 Hydraulic Analysis: Flood Storage and Conveyance

The proposed project development is located in the overbank area of Conejo Creek, in what has been observed in hydraulic modeling to be an area of ineffective flow or ponding. This being the case, it is important to quantify the reduction in floodplain capacity from a flood volume storage standpoint in addition to observing the impacts to hydraulics and floodplain mapping.

After determining the footprint of the project, the amount of flood storage capacity removed was calculated to be approximately 400 ac-ft (*Figure 14*). Numerous alternatives were proposed and analyze to manage the removed storage volume, including but not limited to a variety of conveyance systems and configurations with a network of both larger and/or smaller basins. The final flood storage and conveyance system provides flood storage within an approximately 90 ac-ft ponded area, located where the current lake system is on the main golf course area, with an additional 320 ac-ft of storage provided on the south golf course area as a result of excavation (*Figure 15*). Both areas still provide golfing, with excess lake storage draining in approximately 24 hours and south area greens raised above frequent storm water surface elevations.

To verify the proposed compensatory storage volume and support the results provided in the 2D floodplain models, a XPSWMM hydraulic model was developed. The program was able to provide insight into how various conveyance designs and proposed grading alternatives affect the flood conveyance capacity and storage volume in the proposed system configuration.

5.1 Local Hydraulic Analysis – XPSWMM Model

5.1.1 XPSWMM Model Program

XPSWMM is a one dimensional modeling software program which can be used to analyze the hydraulic performance of an integrated flood conveyance and storage volume network. The program package was created by XP Solutions, now a part of Innovyze after merging in 2017. It runs the FEMA-approved SWMM5 (Storm Water Management Model) engine designed by the EPA. The one-dimensional analysis for the present study was conducted with XPSWMM version 2017.1.

5.1.2 Model Input Parameters

Input parameters are described below. Key areas for the model are: (1) the *East Basin*, immediately upstream of Camarillo Springs Road; (2) the *West Basin*, immediately downstream of Camarillo Springs Road; and (3) the *Lake*, on located on the main golf course.

Hydrologic Data

The hydrograph into the East Basin and the hydrograph into the Lake were obtained from proposed condition VCRat output files, as described in Section 3 and provided in *Appendix C*.

Boundary Conditions

The inflow boundary conditions consist of inflow hydrographs to the East Basin and Lake. The outflow boundary condition consists of an outfall from the main culvert conveyance with varying backwater to simulate storm conditions in Conejo Creek. Another outflow condition is located at the Lake low-flow pipe outlet, which also has varying backwater to determine how long it will take to fully drain the excess storm flows in the Lake.

Basin and Lake Storage Characteristics

Based on proposed grading, the (1) East Basin contains 6.8 ac-ft of storage between 110 ft. and 128 ft. elevations and has a footprint of roughly 1 acre; (2) the West Basin contains 0.8 ac-ft of storage between 118 ft. and 128 ft. elevations and has a footprint of roughly 0.1 acres; and (3) the Lake contains 93.7 ac-ft of storage between 106 ft. and 114 ft. elevations and has a footprint of roughly 21 acres.

Table 5-1 provides the values that were used for the modeled features.

Table 5-1 Input Values for XPSWMM Model

Parameter	Road Inlet Weir	Overflow Weir to Lake	Golf Cart Tunnel at Cam. Spr Rd (10x7)	Proposed RCB Culvert (10x6)	Low Flow Pipe*
Description of Purpose in Model	Flow over Camarillo Springs Road	Flow from West Basin to Lake	Overflow from East Basin to West Basin	Flow from East Basin	Low flow from East Basin to Lake
Length	160	75	60	3586	928
Crest or Inverts	128	125	119 / 119	119 / 108.5	110 / 106
Loss or Discharge Coef's	3	3	0.2 / 0.44	0.2 / 0.44	-
Manning's n	-	-	0.013	0.013	0.014

**could be a sump drain, only used to drain the East Basin*

The exit loss coefficient was chosen using the Borda-Carnot equation (see Equations 1 & 2), which is a function of the ratio of areas upstream and downstream of expansion, along with other well documented sources for geometries and their respective loss coefficients.

Equation 1: $\Delta H = \frac{v^2}{2g} C_L$ Equation 2: $C_L = \left(1 - \frac{A_{US}}{A_{DS}}\right)^2$

where:

ΔH: head loss
v: velocity entering expansion
g: gravitational acceleration
C_L: loss coefficient
A_{US}: cross-sectional area upstream of expansion
A_{DS}: cross-sectional area downstream of expansion

Using a ratio of upstream to downstream area of one-third, the exit loss coefficient becomes 0.44. The entrance loss coefficient of 0.2 corresponds to a slightly rounded entrance. A Manning's n of 0.013 corresponds to a moderate roughness value used for concrete.

5.1.3 Model Configuration

The model layout is shown in Figure 16. Input hydrographs are located at the East Basin, representing flows from 820 acres of the approximately 1080-acre Camarillo Springs Creek watershed, and at the Lake, representing runoff from the adjacent mountainsides and residential. East Basin flows are conveyed through one of four means: (1) A weir representing Camarillo Springs Road; (2) a set of pipes OR a rectangular conduit, representing one of the proposed bypass culvert alternatives; (3) a rectangular conduit representing the existing golf cart path tunnel that runs under Camarillo Springs Road; and (4) a low-flow pipe from the East Basin to the Lake.

The low-flow pipe from the East Basin empties directly to the Lake, bypassing the West Basin. The golf cart path tunnel leads from the East Basin to the West Basin, after which flows in the West Basin "overflow" into the Lake via weir. The Lake and bypass culvert each empty into an outflow node with a variable water surface elevation designed to imitate Conejo Creek during a storm event. This was accomplished by measuring the Conejo Creek water surface elevation from an XP2D model, the two-dimensional version of XPSWMM, and using the resulting stage vs. time data as the backwater boundary condition. This is important to accurately model conveyance since the Conejo Creek water level increases by 18 feet at its peak, impacting head driven flows.

To determine how long it takes to drain the storm runoff from the adjacent mountainsides and residential in the lake storage area, and return the lake to its normal water surface of 107', an outflow node representing a three-foot diameter pipe was added to the model. Additionally, the model analyzed a period of 72 hours, even though the inflow hydrographs representing runoff from adjacent mountainsides and residential last 30 hours. In this way, the model was able to analyze the outflow to Conejo Creek once the peak of the hydrograph had passed.

5.1.4 Model Results

The chosen design uses a 10-foot-wide by 6-foot-high reinforced concrete box (RCB) to convey flows from the upper watershed to Conejo Creek while the Lake remains below a maximum water elevation of 114 ft. This design was chosen because it prevents the overtopping of Camarillo Springs Road at the height of the storm surge when using moderate loss coefficients, and only overtops by 0.2 feet when using conservative coefficients. It will take approximately 24 hours after Conejo Creek has reached its peak water surface elevation for the storm flows from adjacent mountainsides and residential areas in the lake storage area, which had increased the Lake water surface elevation to 114 ft, to drain and return the Lake to its normal water surface elevation of 107'.

Appendix D contains a table of modeled alternatives, including the final chosen design.

6 Conclusions

The *M/DP/CLOMR* study for the proposed Camarillo Springs Golf Course project establishes the following main points:

6.1 Floodplain Mapping Impacts

- The Camarillo Springs Golf Course is located within a 100-year FEMA floodplain resulting primarily from overbank flow from Conejo Creek, but is also affected by tributary runoff flowing through the golf course from the local Camarillo Springs Creek watershed.
- There are approximately 153 homes located within the 100-year FEMA floodplain to the south and southwest of the golf course.
- The project development includes a flood barrier that will remove the 153 homes from the 100-year floodplain.
- A HEC-RAS 2D model comparison between proposed with project condition and existing current condition shows that flow depths do not increase, except on the south area where excavation is allowing more flood storage capacity. The remainder of the project area as well as the location of the 153 homes in the 100-year effective FEMA floodplain experience a flow depth decrease in the proposed condition.
- The HEC-RAS 2D model comparison also shows that FEMA BFEs do not increase near the property, and flow velocities remain low, with changes highly localized. Additionally, the floodplain limits remain the same outside of the property.

6.2 Flood Storage Results

- The floodplain on the golf course is not within the active channel of Conejo Creek, however the area does act as a natural sink with flood storage volume capacity.
- The flood storage capacity, which is reduced due to the project development, is accounted for by excavating the south area of the golf course to allow additional floodplain storage.
- Runoff volume from the Upper Camarillo Springs watershed is able to be either conveyed (culvert) or stored (golf course lake storage).
- The remaining lake storage is available and able to store runoff from adjacent watersheds and residential areas.
- The excess lake volume as a result of the storm runoff is able to be drained out of the golf course in approximately 24 hours after the peak of the storm passes.

Detailed storage volume balances and proposed grading of the Main Golf Course Area, East Golf Course Area and the South Golf Course Area are provided in *Appendix E*.

6.3 FEMA Conditional Letter of Map Revision

The next step for the Camarillo Springs Golf Course project development is submitting a Conditional Letter of Map Revision application to FEMA. As has been mentioned in other sections of this MDP report, the proposed project development is currently located within the FEMA 100-year floodplain. The project development would remove 100-year floodplain from both the development site, and an additional 153 homes in residential areas near the golf course. *Appendix A* has MT-2 Forms, FEMA FIRM Panels, and an Annotated FIRM in preparation of the CLOMR application.

Figures

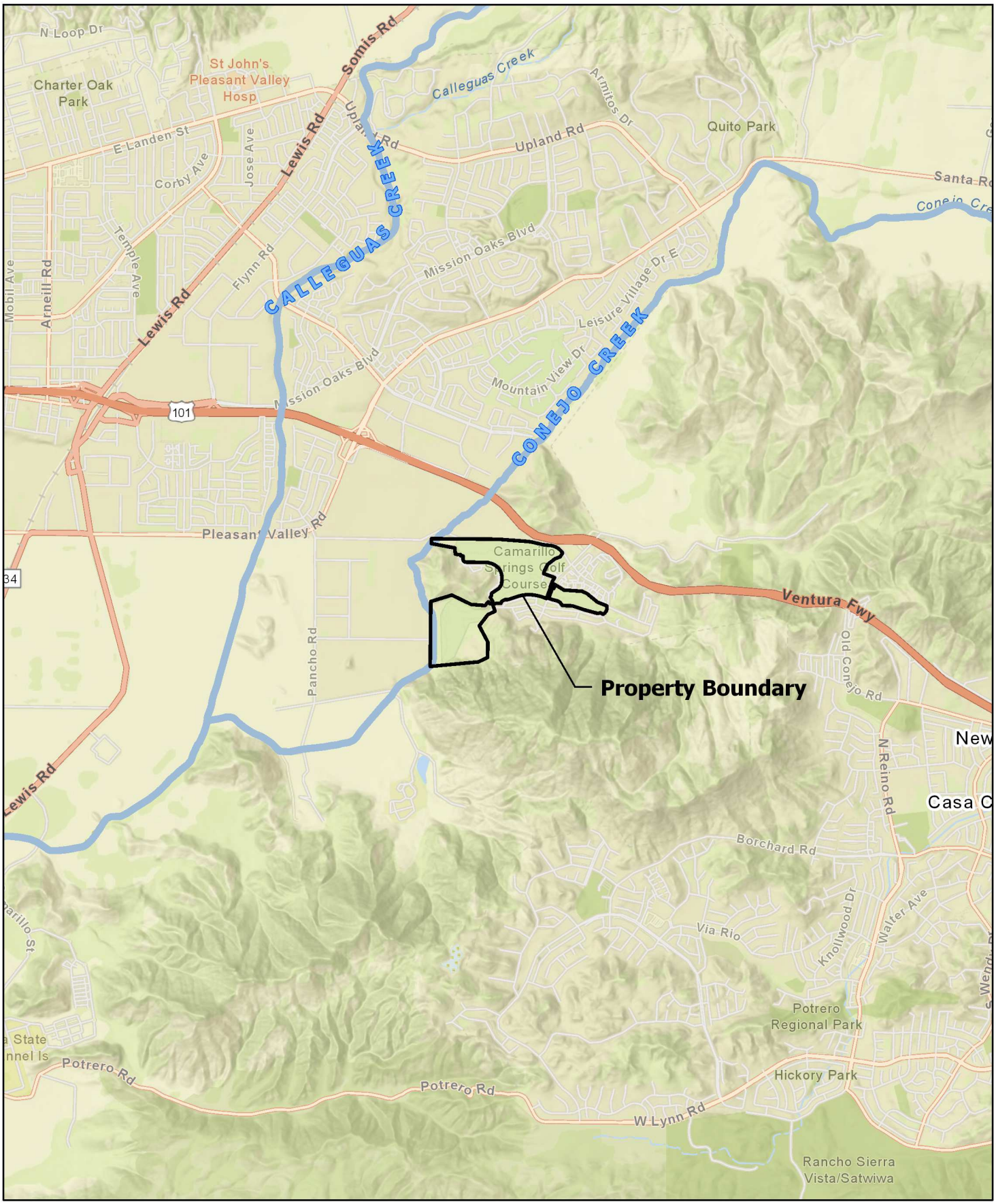

CAMARILLO SPRINGS

VICINITY MAP

PACE Advanced Water Engineering

0 2,000 4,000 8,000 Feet

Date: 10/31/2018

Job Number: B306

Figure 1



Camarillo Springs | Overall

Landscape Concept Plan

30 August 2017

burton

Figure 2

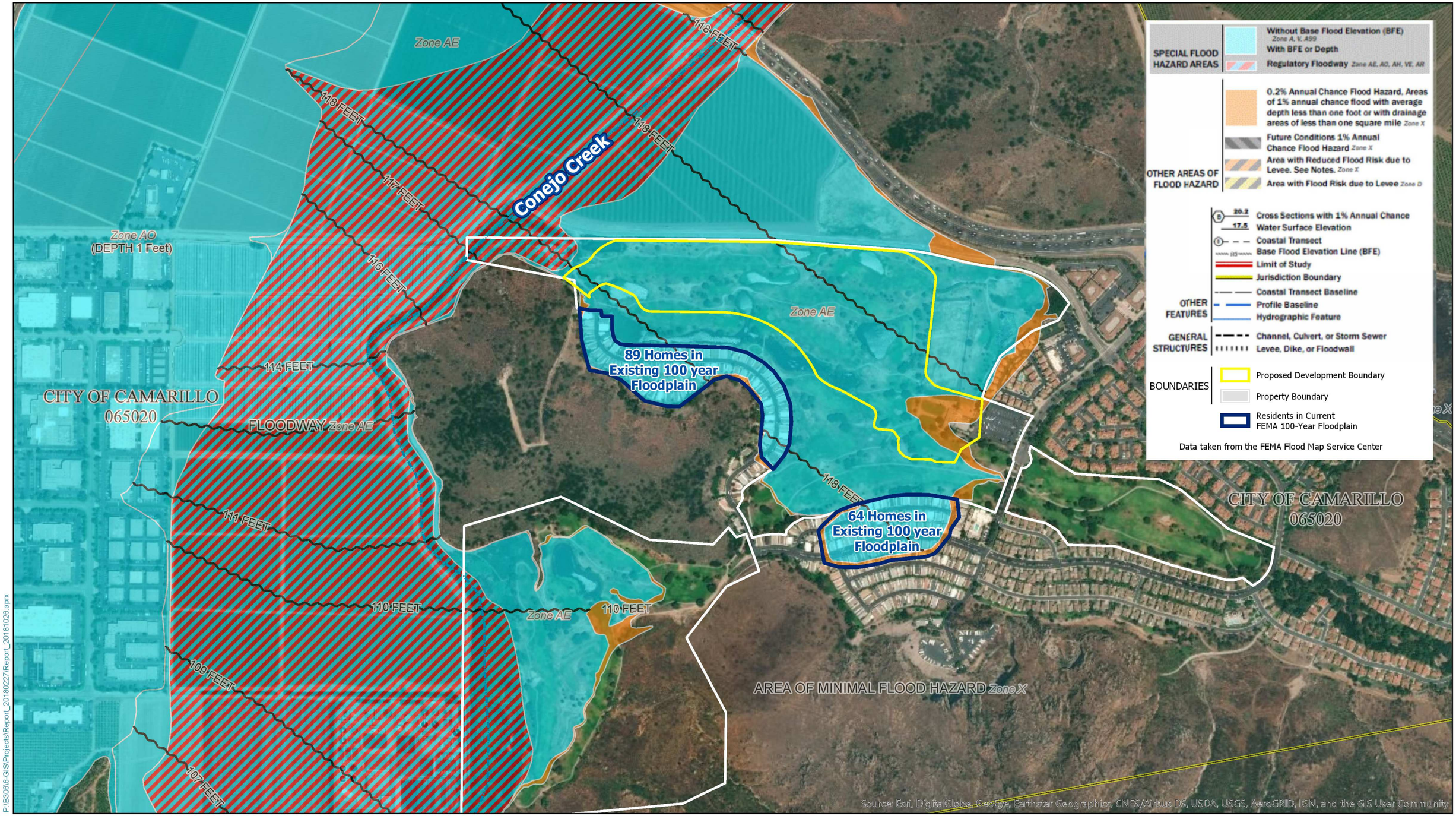

P:\B3061\6-GIS\Projects\Report_20180227\Report_20181026.aprx

CAMARILLO SPRINGS

EFFECTIVE FEMA FLOODPLAIN

PACE Advanced Water Engineering

0 300 600 1,200 Feet

Date: 10/31/2018

Job Number: B306

Figure 3

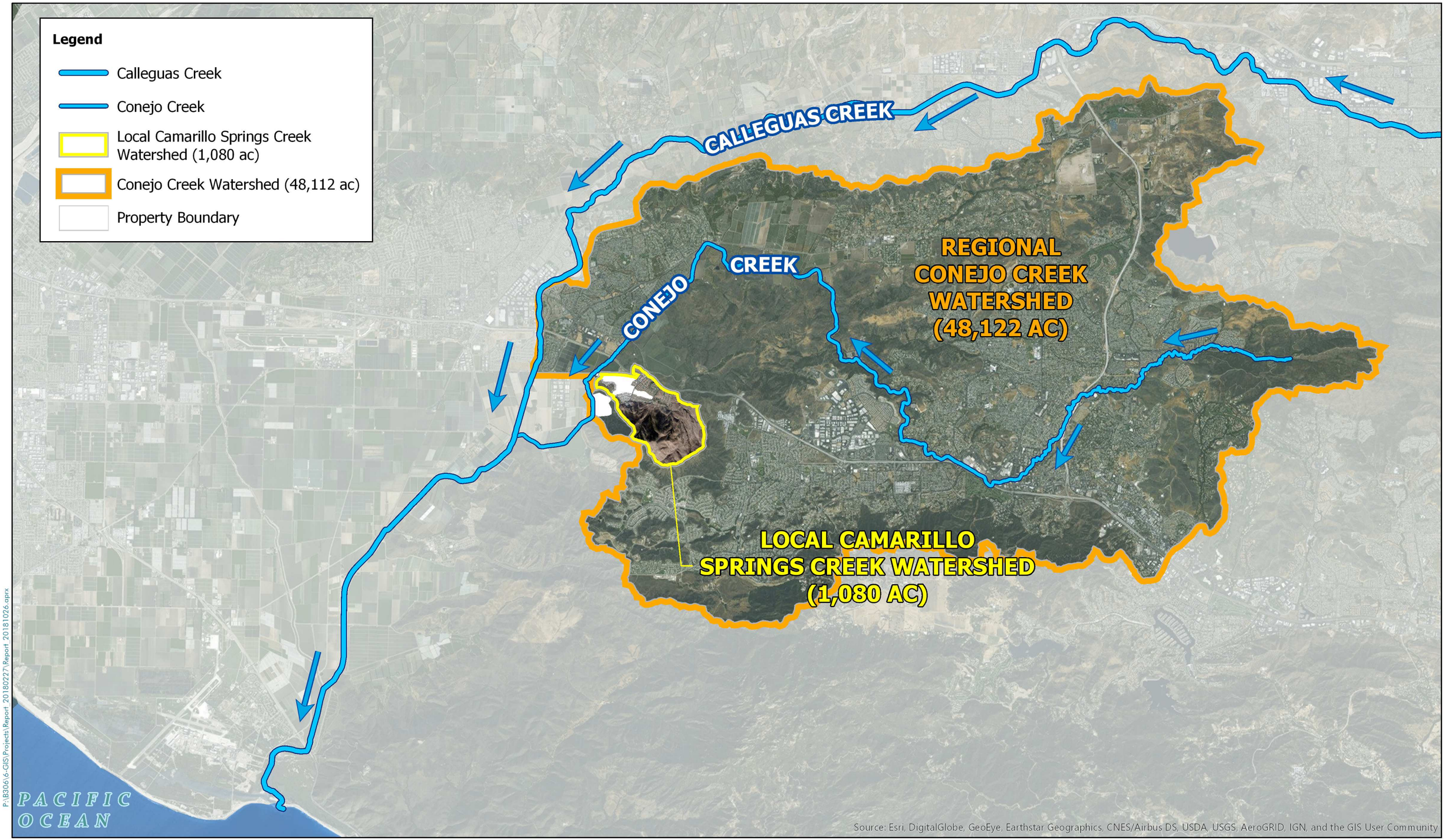

P:\B306\6-GIS\Projects\Report 20180227\Report 20181026.aprx

CAMARILLO SPRINGS

REGIONAL & LOCAL WATERSHED HYDROLOGY MAP

PACE Advanced Water Engineering

0 0.75 1.5 3 Miles

Date: 10/29/2018

Job Number: B306

Figure 4

WS-C
120 ac

WS-B
140 ac

WS-A
820 ac

Legend

- Conejo Creek
- Camarillo Springs Watershed (1080 ac)

Proposed Condition Development Watersheds

- Upper Camarillo Springs Watershed (820 ac) (Drains to culvert with high flows to lake storage)
- South Adjacent Camarillo Springs Watershed (140 ac) (Drains to lake storage)
- East Adjacent Camarillo Springs Watershed (120 ac) (Drains to north near driving range)
- Proposed Development (32 ac)

P:\B306\6-GIS\Projects\Report 20180227\Report 20181026.aprx

Source: Esri, DigitalGlobe, GeoEye, Earthstar Geographics, CNES/Airbus DS, USDA, USGS, AeroGRID, IGN, and the GIS User Community

CAMARILLO SPRINGS

PROPOSED CONDITION DRAINAGE MAP

PACE Advanced Water Engineering

0 500 1,000 2,000 Feet

Date: 10/31/2018

Job Number: B306

Figure 5

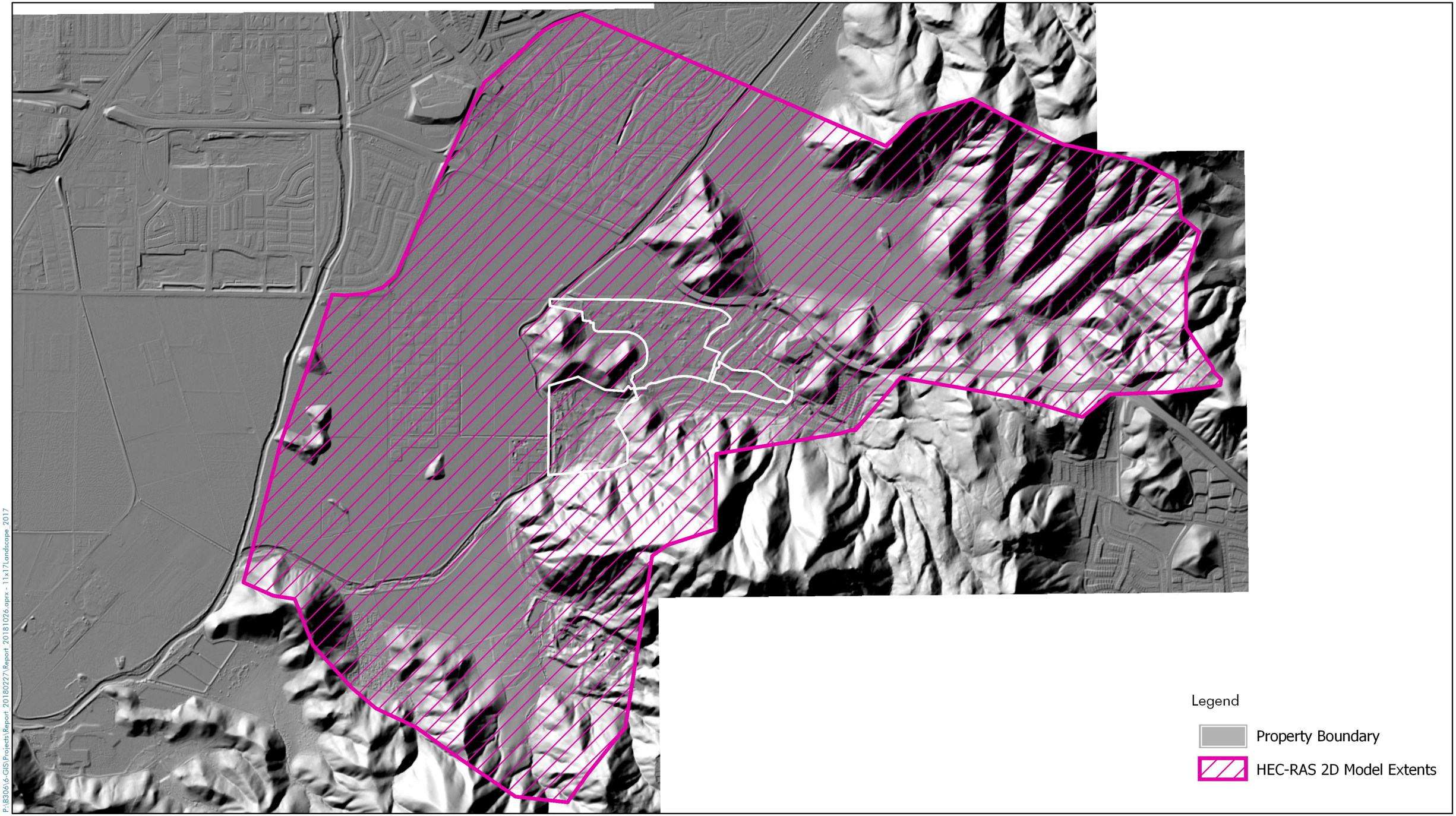

P:\B306\6-GIS\Projects\Report 20180227\Report 20181026.aprx - 11x17Landscape 2017

CAMARILLO SPRINGS

HEC-RAS 2D MODEL EXTENTS

PACE Advanced Water Engineering

0 1,000 2,000 4,000 Feet

Date: 10/29/2018

Job Number: B306

Figure 7

Legend

Proposed Development Boundary

Property Boundary

Existing 100-Year Flow Depth (ft)

- 0 to 1
- 1 to 2
- 2 to 3
- 3 to 4
- 4 to 5
- 5 to 6
- 6 to 7
- 7 to 8
- 8 to 9
- 9 to 10
- 10 to 11
- 11 to 12
- 12 to 13
- 13 to 14
- 14 to 15
- > 15

Source: Esri, DigitalGlobe, GeoEye, Earthstar Geographics, CNES/Airbus DS, USDA, USGS, AeroGRID, IGN, and the GIS User Community

P:\B306\6-GIS\Projects\Report 20180227\Report 20181026.aprx - Figure 8 Existing Flow Depth

CAMARILLO SPRINGS

PACE Advanced Water Engineering

0 400 800 1,600 Feet

Date: 10/31/2018

Job Number: B306

HEC-RAS 2D
EXISTING CONDITION FLOW DEPTH

Figure 8

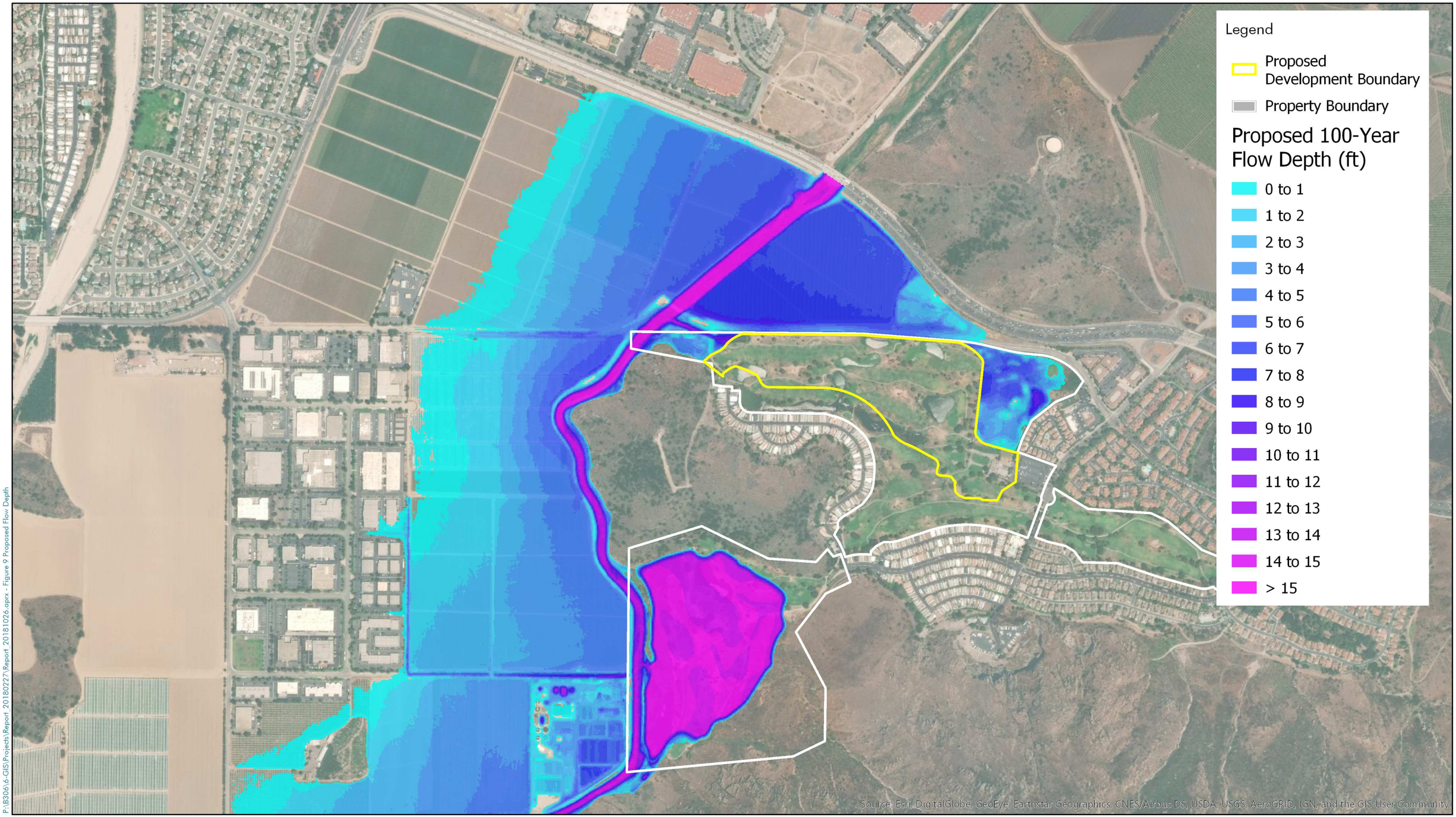

P:\B306\6-GIS\Projects\Report 20180227\Report 20181026.aprx - Figure 9 Proposed Flow Depth

CAMARILLO SPRINGS

HEC-RAS 2D
PROPOSED CONDITION FLOW DEPTH

PACE Advanced Water Engineering

0 400 800 1,600 Feet

Date: 10/31/2018

Job Number: B306

Figure 9

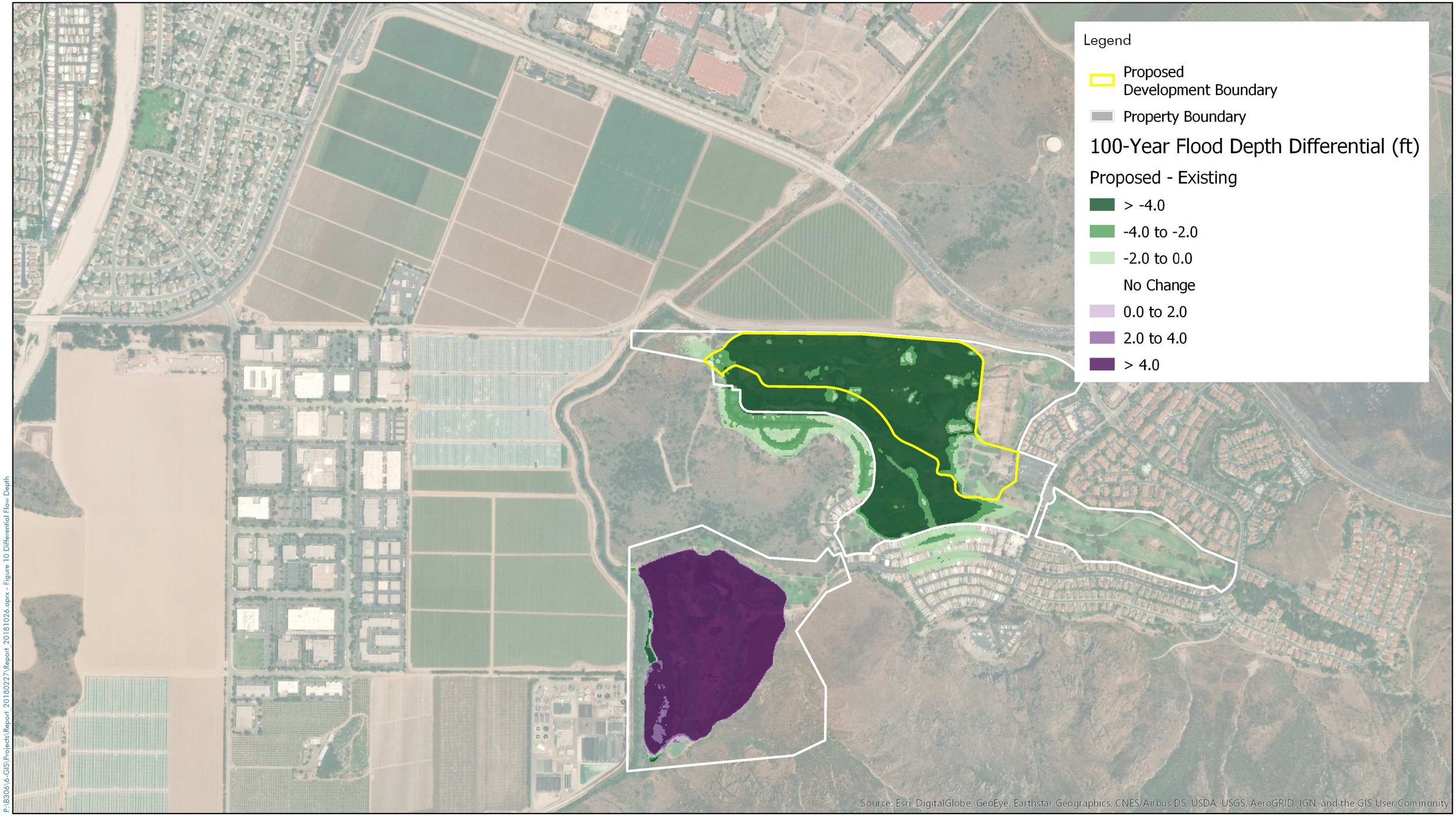

P:\B306\6-GIS\Projects\Report_20180227\Report_20181026.aprx - Figure 10 Differential Flow Depth

CAMARILLO SPRINGS

PACE Advanced Water Engineering

0 400 800 1,600 Feet

Date: 10/31/2018

Job Number: B306

HEC-RAS 2D
FLOW DEPTH DIFFERENTIAL

Figure 10

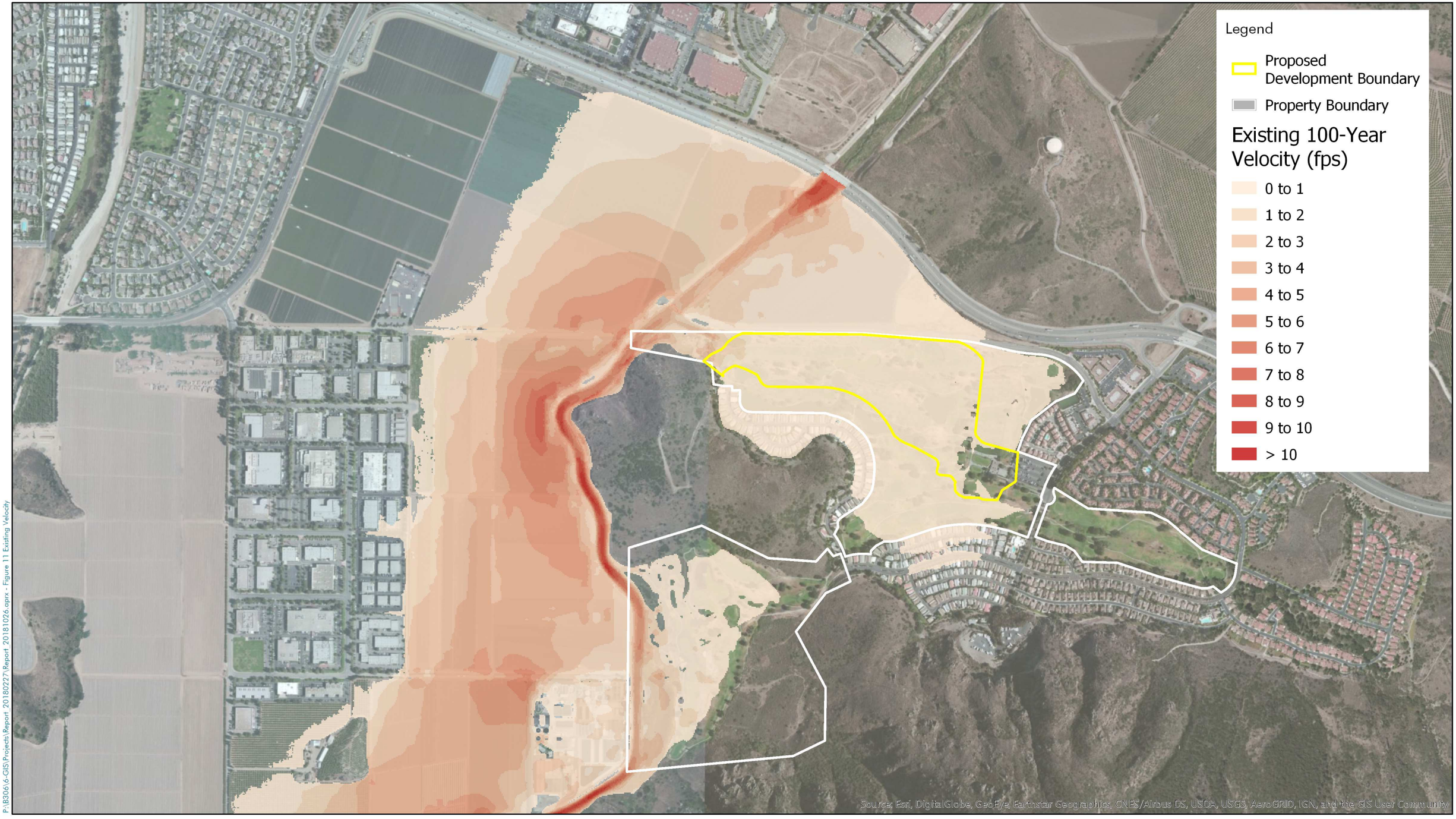

P:\B306\6-GIS\Projects\Report_20180227\Report_20181026.aprx - Figure 11 Existing Velocity

CAMARILLO SPRINGS

PACE Advanced Water Engineering

0 400 800 1,600 Feet

Date: 10/31/2018

Job Number: B306

HEC-RAS 2D
EXISTING CONDITION VELOCITY

Figure 11



P:\B306\6-GIS\Projects\Report 20180227\Report_20181026.aprx - Figure 12 Proposed Velocity

CAMARILLO SPRINGS

PACE Advanced Water Engineering

0 400 800 1,600 Feet

Date: 10/31/2018

Job Number: B306

HEC-RAS 2D
PROPOSED CONDITION VELOCITY

Figure 12



P:\B306\6-GIS\Projects\Report_20180227\Report_20181026.aprx - Figure 13 Differential Velocity

CAMARILLO SPRINGS

HEC-RAS 2D
VELOCITY DIFFERENTIAL

PACE Advanced Water Engineering

0 400 800 1,600 Feet

Date: 10/31/2018

Job Number: B306

Figure 13

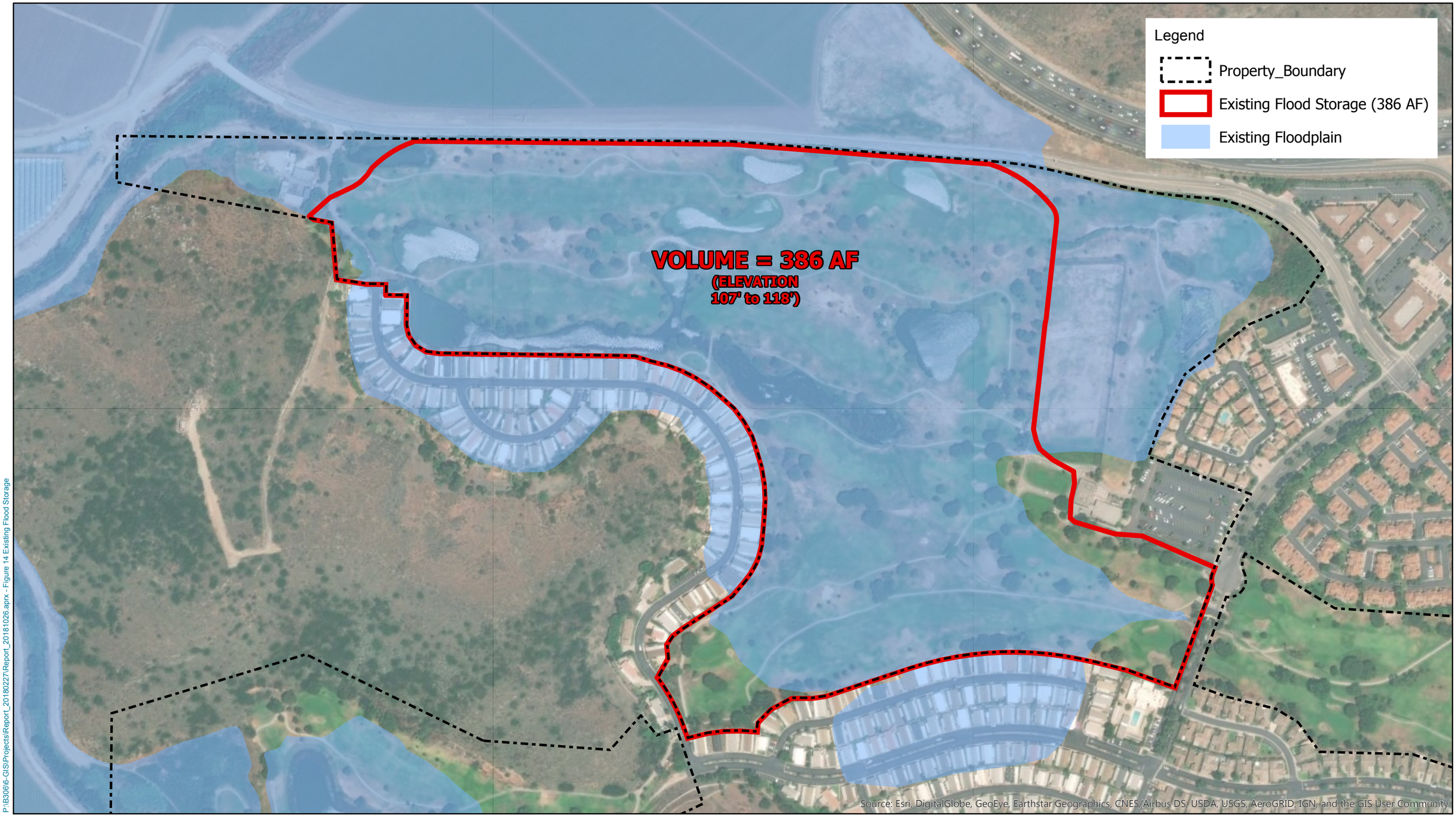

P:\B306\6-GIS\Projects\Report_20180227\Report_20181026.aprx - Figure 14 Existing Flood Storage

CAMARILLO SPRINGS

EXISTING FLOOD STORAGE

PACE Advanced Water Engineering

0 150 300 600 Feet

Date: 10/30/2018

Job Number: B306

Figure 14

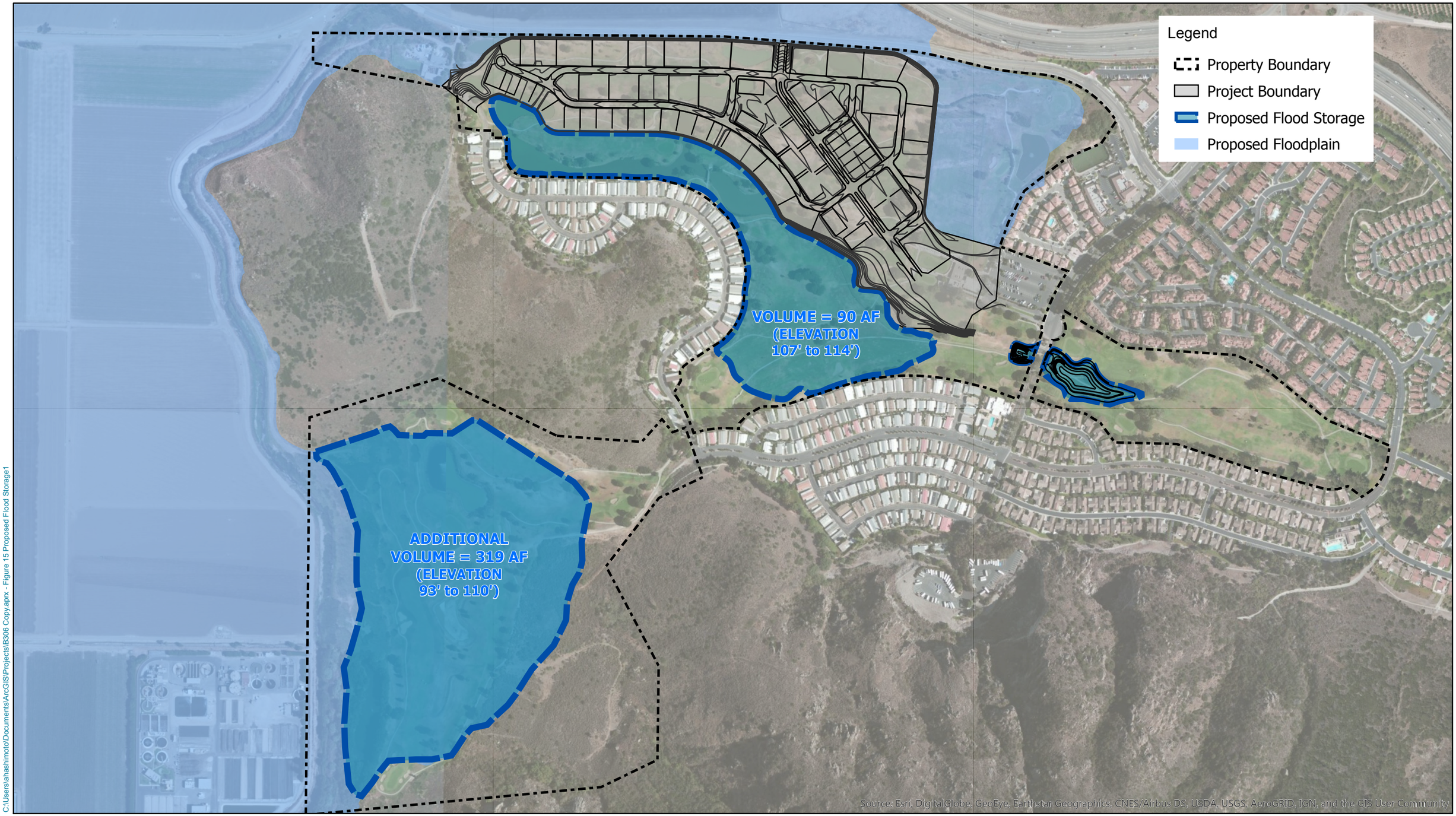

C:\Users\ahashimoto\Documents\ArcGIS\Projects\B306 Copy.aprx - Figure 15 Proposed Flood Storage1

CAMARILLO SPRINGS

PROPOSED FLOOD STORAGE

PACE Advanced Water Engineering

0 150 300 600 Feet

Date: 10/31/2018

Job Number: B306

Figure 15

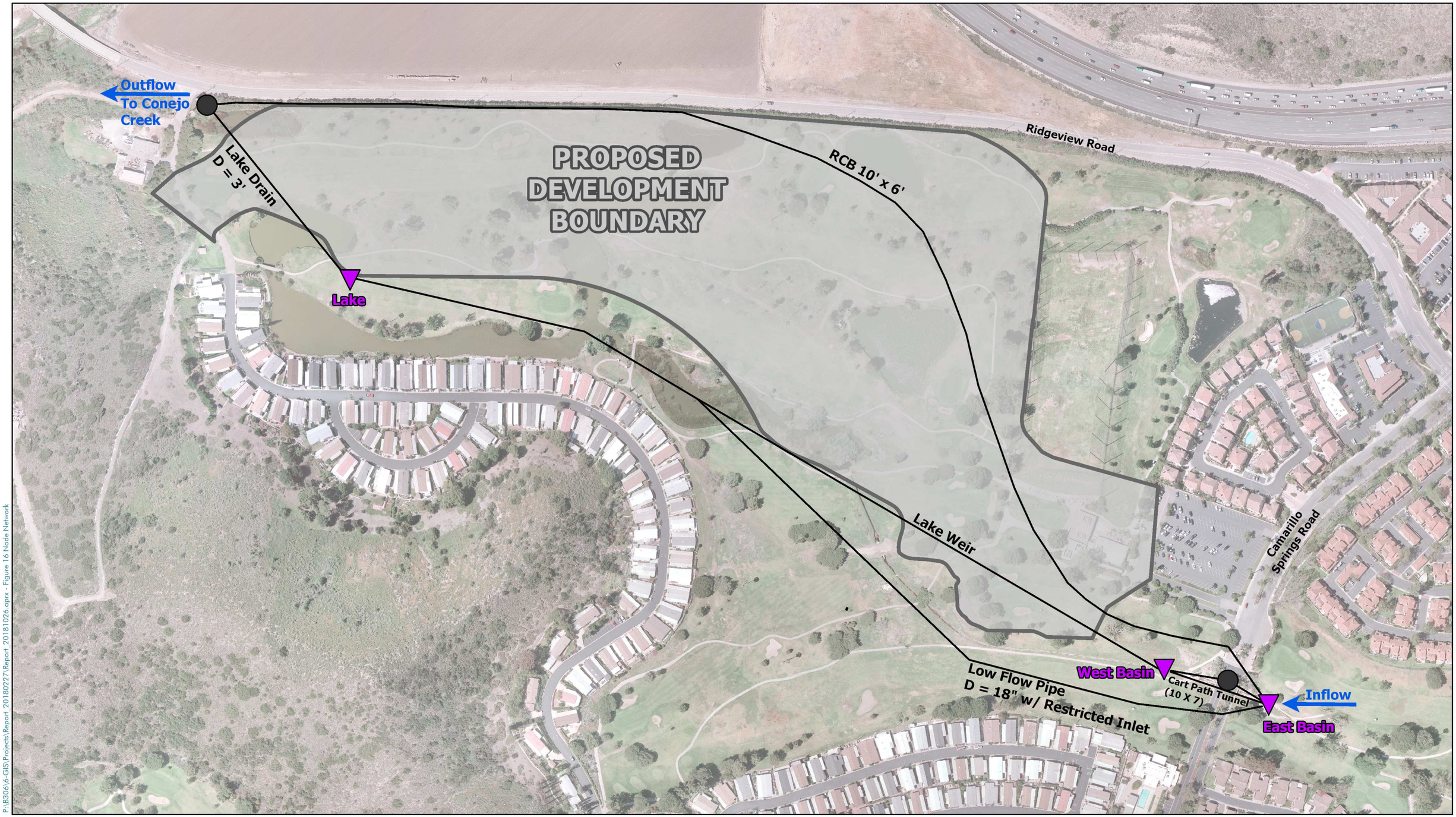

P:\B306\6-GIS\Projects\Report 20180227\Report 20181026.aprx - Figure 16 Node Network

CAMARILLO SPRINGS

PACE Advanced Water Engineering

0 125 250 500 Feet

Date: 10/31/2018

Job Number: B306

XPSWMM
NODE NETWORK

Figure 16



Appendix A

U.S. DEPARTMENT OF HOMELAND SECURITY
FEDERAL EMERGENCY MANAGEMENT AGENCY

OVERVIEW & CONCURRENCE FORM

O.M.B No. 1660-0016
Expires February 28, 2014

PAPERWORK BURDEN DISCLOSURE NOTICE

Public reporting burden for this form is estimated to average 1 hours per response. The burden estimate includes the time for reviewing instructions, searching existing data sources, gathering and maintaining the needed data, and completing, reviewing, and submitting the form. You are not required to respond to this collection of information unless it displays a valid OMB control number. Send comments regarding the accuracy of the burden estimate and any suggestions for reducing this burden to: Information Collections Management, Department of Homeland Security, Federal Emergency Management Agency, 1800 South Bell Street, Arlington, VA 20958-3005, Paperwork Reduction Project (1660-0016). Submission of the form is required to obtain or retain benefits under the National Flood Insurance Program. **Please do not send your completed survey to the above address.**

PRIVACY ACT STATEMENT

AUTHORITY: The National Flood Insurance Act of 1968, Public Law 90-448, as amended by the Flood Disaster Protection Act of 1973, Public Law 93-234.

PRINCIPAL PURPOSE(S): This information is being collected for the purpose of determining an applicant's eligibility to request changes to National Flood Insurance Program (NFIP) Flood Insurance Rate Maps (FIRM).

ROUTINE USE(S): The information on this form may be disclosed as generally permitted under 5 U.S.C § 552a(b) of the Privacy Act of 1974, as amended. This includes using this information as necessary and authorized by the routine uses published in DHS/FEMA/NFIP/LOMA-1 National Flood Insurance Program (NFIP); Letter of Map Amendment (LOMA) February 15, 2006, 71 FR 7990.

DISCLOSURE: The disclosure of information on this form is voluntary; however, failure to provide the information requested may delay or prevent FEMA from processing a determination regarding a requested change to a (NFIP) Flood Insurance Rate Maps (FIRM).

A. REQUESTED RESPONSE FROM DHS-FEMA

This request is for a (check one):

☒ CLOMR: A letter from DHS-FEMA commenting on whether a proposed project, if built as proposed, would justify a map revision, or proposed hydrology changes (See 44 CFR Ch. 1, Parts 60, 65 & 72).

☐ LOMR: A letter from DHS-FEMA officially revising the current NFIP map to show the changes to floodplains, regulatory floodway or flood elevations. (See 44 CFR Ch. 1, Parts 60, 65 & 72)

B. OVERVIEW

1. The NFIP map panel(s) affected for all impacted communities is (are):

Community No.	Community Name	State	Map No.	Panel No.	Effective Date
Example: 480301 480287	City of Katy Harris County	TX TX	48473C 48201C	0005D 0220G	02/08/83 09/28/90
065020	City of Camarillo	CA	06111C	0934E	1/20/201
065020	City of Camarillo	CA	06111C	0953E	1/20/201

2. a. Flooding Source: Conejo Creek

   b. Types of Flooding: ☒ Riverine ☐ Coastal ☐ Shallow Flooding (e.g., Zones AO and AH)
   ☐ Alluvial fan ☐ Lakes ☐ Other (Attach Description)

3. Project Name/Identifier: Camarillo Springs Golf Course

4. FEMA zone designations affected: AE, X (choices: A, AH, AO, A1-A30, A99, AE, AR, V, V1-V30, VE, B, C, D, X)

5. Basis for Request and Type of Revision:

   a. The basis for this revision request is (check all that apply)

   ☒ Physical Change ☒ Improved Methodology/Data ☐ Regulatory Floodway Revision ☐ Base Map Changes
   ☐ Coastal Analysis ☒ Hydraulic Analysis ☒ Hydrologic Analysis ☐ Corrections
   ☐ Weir-Dam Changes ☐ Levee Certification ☐ Alluvial Fan Analysis ☐ Natural Changes
   ☒ New Topographic Data ☐ Other (Attach Description)

   Note: A photograph and narrative description of the area of concern is not required, but is very helpful during review.

b. The area of revision encompasses the following structures (check all that apply)

Structures: ☐ Channelization ☐ Levee/Floodwall ☒ Bridge/Culvert

☐ Dam ☒ Fill ☐ Other (Attach Description)

6. ☒ Documentation of ESA compliance is submitted (required to initiate CLOMR review). Please refer to the instructions for more information.

C. REVIEW FEE

Has the review fee for the appropriate request category been included? ☒ Yes Fee amount: $7,250

☐ No, Attach Explanation

Please see the DHS-FEMA Web site at http://www.fema.gov/plan/prevent/fhm/frm_fees.shtm **for Fee Amounts and Exemptions.**

D. SIGNATURE

All documents submitted in support of this request are correct to the best of my knowledge. I understand that any false statement may be punishable by fine or imprisonment under Title 18 of the United States Code, Section 1001.

Name:	Company:	
Mailing Address:	Daytime Telephone No.:	Fax No.:
	E-Mail Address:	
Signature of Requester (required):	Date:	

As the community official responsible for floodplain management, I hereby acknowledge that we have received and reviewed this Letter of Map Revision (LOMR) or conditional LOMR request. Based upon the community's review, we find the completed or proposed project meets or is designed to meet all of the community floodplain management requirements, including the requirements for when fill is placed in the regulatory floodway, and that all necessary Federal, State, and local permits have been, or in the case of a conditional LOMR, will be obtained. For Conditional LOMR requests, the applicant has documented Endangered Species Act (ESA) compliance to FEMA prior to FEMA's review of the Conditional LOMR application. For LOMR requests, I acknowledge that compliance with Sections 9 and 10 of the ESA has been achieved independently of FEMA's process. For actions authorized, funded, or being carried out by Federal or State agencies, documentation from the agency showing its compliance with Section 7(a)(2) of the ESA will be submitted. In addition, we have determined that the land and any existing or proposed structures to be removed from the SFHA are or will be reasonably safe from flooding as defined in 44CFR 65.2(c), and that we have available upon request by FEMA, all analyses and documentation used to make this determination.

Community Official's Name and Title:	Community Name:	
Mailing Address:	Daytime Telephone No.:	Fax No.:
	E-Mail Address:	
Community Official's Signature (required):	Date:	

CERTIFICATION BY REGISTERED PROFESSIONAL ENGINEER AND/OR LAND SURVEYOR

This certification is to be signed and sealed by a licensed land surveyor, registered professional engineer, or architect authorized by law to certify elevation information data, hydrologic and hydraulic analysis, and any other supporting information as per NFIP regulations paragraph 65.2(b) and as described in the MT-2 Forms Instructions. All documents submitted in support of this request are correct to the best of my knowledge. I understand that any false statement may be punishable by fine or imprisonment under Title 18 of the United States Code, Section 1001.

Certifier's Name:	License No.:		Expiration Date:
Company Name:	Telephone No.:		Fax No.:
Signature:	Date:	E-Mail Address:	

Ensure the forms that are appropriate to your revision request are included in your submittal.

Form Name and (Number)	Required if …
☒ Riverine Hydrology and Hydraulics Form (Form 2)	New or revised discharges or water-surface elevations
☒ Riverine Structures Form (Form 3)	Channel is modified, addition/revision of bridge/culverts, addition/revision of levee/floodwall, addition/revision of dam
☐ Coastal Analysis Form (Form 4)	New or revised coastal elevations
☐ Coastal Structures Form (Form 5)	Addition/revision of coastal structure
☐ Alluvial Fan Flooding Form (Form 6)	Flood control measures on alluvial fans

Seal (Optional)

U.S. DEPARTMENT OF HOMELAND SECURITY
FEDERAL EMERGENCY MANAGEMENT AGENCY

RIVERINE HYDROLOGY & HYDRAULICS FORM

O.M.B No. 1660-0016
Expires February 28, 2014

PAPERWORK BURDEN DISCLOSURE NOTICE

Public reporting burden for this form is estimated to average 3.5 hours per response. The burden estimate includes the time for reviewing instructions, searching existing data sources, gathering and maintaining the needed data, and completing, reviewing, and submitting the form. You are not required to respond to this collection of information unless a valid OMB control number appears in the upper right corner of this form. Send comments regarding the accuracy of the burden estimate and any suggestions for reducing this burden to: Information Collections Management, Department of Homeland Security, Federal Emergency Management Agency, 1800 South Bell Street, Arlington VA 20958-3005, Paperwork Reduction Project (1660-0016). Submission of the form is required to obtain or retain benefits under the National Flood Insurance Program. **Please do not send your completed survey to the above address.**

PRIVACY ACT STATEMENT

AUTHORITY: The National Flood Insurance Act of 1968, Public Law 90-448, as amended by the Flood Disaster Protection Act of 1973, Public Law 93-234.

PRINCIPAL PURPOSE(S): This information is being collected for the purpose of determining an applicant's eligibility to request changes to National Flood Insurance Program (NFIP) Flood Insurance Rate Maps (FIRM).

ROUTINE USE(S): The information on this form may be disclosed as generally permitted under 5 U.S.C § 552a(b) of the Privacy Act of 1974, as amended. This includes using this information as necessary and authorized by the routine uses published in DHS/FEMA/NFIP/LOMA-1 National Flood Insurance Program (NFIP); Letter of Map Amendment (LOMA) February 15, 2006, 71 FR 7990.

DISCLOSURE: The disclosure of information on this form is voluntary; however, failure to provide the information requested may delay or prevent FEMA from processing a determination regarding a requested change to a NFIP Flood Insurance Rate Maps (FIRM).

Flooding Source: Conejo Creek

Note: Fill out one form for each flooding source studied

A. HYDROLOGY

1. Reason for New Hydrologic Analysis (check all that apply)

☐ Not revised (skip to section B) ☐ No existing analysis ☐ Improved data
☐ Alternative methodology ☒ Proposed Conditions (CLOMR) ☒ Changed physical condition of watershed

2. Comparison of Representative 1%-Annual-Chance Discharges

Location	Drainage Area (Sq. Mi.)	Effective/FIS (cfs)	Revised (cfs)
Section D/S of Adohr Lane	Tributary to Conejo	2,079 cfs, 390 af	1,601 cfs, 300 af

3. Methodology for New Hydrologic Analysis (check all that apply)

☐ Statistical Analysis of Gage Records ☐ Precipitation/Runoff Model → Specify Model: _____
☐ Regional Regression Equations ☒ Other (please attach description) VCRat w/ scaled runoff volume reduction

Please enclose all relevant models in digital format, maps, computations (including computation of parameters), and documentation to support the new analysis.

4. Review/Approval of Analysis

If your community requires a regional, state, or federal agency to review the hydrologic analysis, please attach evidence of approval/review.

5. Impacts of Sediment Transport on Hydrology

Is the hydrology for the revised flooding source(s) affected by sediment transport? ☐ Yes ☒ No

If yes, then fill out Section F (Sediment Transport) of Form 3. If No, then attach your explanation..

B. HYDRAULICS

1. Reach to be Revised

	Description	Cross Section	Water-Surface Elevations (ft.) Effective	Proposed/Revised
Downstream Limit*	1,350 feet U/S of Howard Road Bridge	XS 48073	109.2	108.9
Upstream Limit*	D/S of Highway 101 Bridge	XS 54749	118.0	118.3

*Proposed/Revised elevations must tie-into the Effective elevations within 0.5 foot at the downstream and upstream limits of revision.

2. Hydraulic Method/Model Used: HEC-RAS 2D

3. Pre-Submittal Review of Hydraulic Models*

DHS-FEMA has developed two review programs, CHECK-2 and CHECK-RAS, to aid in the review of HEC-2 and HEC-RAS hydraulic models, respectively. We recommend that you review your HEC-2 and HEC-RAS models with CHECK-2 and CHECK-RAS.

4.

Models Submitted	Natural Run		Floodway Run		Datum
Duplicate Effective Model*	File Name: FEMA Ventura FP	Plan Name: FloodplainAnalysis	File Name:	Plan Name:	NAVD 88
Corrected Effective Model*	File Name:	Plan Name:	File Name:	Plan Name:	
Existing or Pre-Project Conditions Model	File Name: Camarillo Springs	Plan Name: ExistingCondition	File Name:	Plan Name:	NAVD 88
Revised or Post-Project Conditions Model	File Name: Camarillo Springs	Plan Name: ProposedCondition	File Name:	Plan Name:	NAVD 88
Other - (attach description)	File Name:	Plan Name:	File Name:	Plan Name:	

* For details, refer to the corresponding section of the instructions.

☒ Digital Models Submitted? (Required)

C. MAPPING REQUIREMENTS

A **certified topographic work map** must be submitted showing the following information (where applicable): the boundaries of the effective, existing, and proposed conditions 1%-annual-chance floodplain (for approximate Zone A revisions) or the boundaries of the 1%- and 0.2%-annual-chance floodplains and regulatory floodway (for detailed Zone AE, AO, and AH revisions); location and alignment of all cross sections with stationing control indicated; stream, road, and other alignments (e.g., dams, levees, etc.); current community easements and boundaries; boundaries of the requester's property; certification of a registered professional engineer registered in the subject State; location and description of reference marks; and the referenced vertical datum (NGVD, NAVD, etc.).

☒ Digital Mapping (GIS/CADD) Data Submitted (preferred)

Topographic Information: LiDAR

Source: Ventura County Date: July 2013

Accuracy: 10' x 10' grid, 9.25 cm vertical accuracy

Note that the boundaries of the existing or proposed conditions floodplains and regulatory floodway to be shown on the revised FIRM and/or FBFM must tie-in with the effective floodplain and regulatory floodway boundaries. Please attach **a copy of the effective FIRM and/or FBFM**, at the same scale as the original, annotated to show the boundaries of the revised 1%-and 0.2%-annual-chance floodplains and regulatory floodway that tie-in with the boundaries of the effective 1%-and 0.2%-annual-chance floodplain and regulatory floodway at the upstream and downstream limits of the area on revision.

☒ Annotated FIRM and/or FBFM (Required)

D. COMMON REGULATORY REQUIREMENTS*

1. For LOMR/CLOMR requests, do Base Flood Elevations (BFEs) increase? ☒ Yes ☒ No

   a. For CLOMR requests, if either of the following is true, please submit **evidence of compliance with Section 65.12 of the NFIP regulations**:

   - The proposed project encroaches upon a regulatory floodway and would result in increases above 0.00 foot compared to pre-project conditions.
   - The proposed project encroaches upon a SFHA with or without BFEs established and would result in increases above 1.00 foot compared to pre-project conditions.

   b. Does this LOMR request cause increase in the BFE and/or SFHA compared with the effective BFEs and/or SFHA? ☐ Yes ☐ No
   If Yes, please attach **proof of property owner notification and acceptance (if available)**. Elements of and examples of property owner notifications can be found in the MT-2 Form 2 Instructions.

2. Does the request involve the placement or proposed placement of fill? ☒ Yes ☐ No

   If Yes, the community must be able to certify that the area to be removed from the special flood hazard area, to include any structures or proposed structures, meets all of the standards of the local floodplain ordinances, and is reasonably safe from flooding in accordance with the NFIP regulations set forth at 44 CFR 60.3(A)(3), 65.5(a)(4), and 65.6(a)(14). Please see the MT-2 instructions for more information.

3. For LOMR requests, is the regulatory floodway being revised? ☐ Yes ☐ No

   If Yes, attach **evidence of regulatory floodway revision notification**. As per Paragraph 65.7(b)(1) of the NFIP Regulations, notification is required for requests involving revisions to the regulatory floodway. (Not required for revisions to approximate 1%-annual-chance floodplains [studied Zone A designation] unless a regulatory floodway is being established. Elements and examples of regulatory floodway revision notification can be found in the MT-2 Form 2 Instructions.)

4. For CLOMR requests, please submit documentation to FEMA and the community to show that you have complied with Sections 9 and 10 of the Endangered Species Act (ESA).

For actions authorized, funded, or being carried out by Federal or State agencies, please submit documentation from the agency showing its compliance with Section 7(a)(2) of the ESA. Please see the MT-2 instructions for more detail.

* Not inclusive of all applicable regulatory requirements. For details, see 44 CFR parts 60 and 65.

DEPARTMENT OF HOMELAND SECURITY
FEDERAL EMERGENCY MANAGEMENT AGENCY

RIVERINE STRUCTURES FORM

O.M.B. NO. 1660-0016
Expires February 28, 2014

PAPERWORK BURDEN DISCLOSURE NOTICE

Public reporting burden for this form is estimated to average 7 hours per response. The burden estimate includes the time for reviewing instructions, searching existing data sources, gathering and maintaining the needed data, and completing, reviewing, and submitting the form. You are not required to respond to this collection of information unless a valid OMB control number appears in the upper right corner of this form. Send comments regarding the accuracy of the burden estimate and any suggestions for reducing this burden to: Information Collections Management, Department of Homeland Security, Federal Emergency Management Agency, 1800 South Bell Street, Arlington, VA 20598-3005, Paperwork Reduction Project (1660-0016). Submission of the form is required to obtain or retain benefits under the National Flood Insurance Program. **Please do not send your completed survey to the above address.**

PRIVACY ACT STATEMENT

AUTHORITY: The National Flood Insurance Act of 1968, Public Law 90-448, as amended by the Flood Disaster Protection Act of 1973, Public Law 93-234.

PRINCIPAL PURPOSE(S): This information is being collected for the purpose of determining an applicant's eligibility to request changes to National Flood Insurance Program (NFIP) Flood Insurance Rate Maps (FIRM).

ROUTINE USE(S): The information on this form may be disclosed as generally permitted under 5 U.S.C § 552a(b) of the Privacy Act of 1974, as amended. This includes using this information as necessary and authorized by the routine uses published in DHS/FEMA/NFIP/LOMA-1 National Flood Insurance Program; Letter of Map Amendment (LOMA) February 15, 2006, 71 FR 7990.

DISCLOSURE: The disclosure of information on this form is voluntary; however, failure to provide the information requested may delay or prevent FEMA from processing a determination regarding a requested change to a NFIP Flood Insurance Rate Maps (FIRM).

Flooding Source: Conejo Creek

Note**:** Fill out one form for each flooding source studied.

A. GENERAL

Complete the appropriate section(s) for each Structure listed below:

Channelization.....complete Section B
Bridge/Culvert.....complete Section C
Dam.....complete Section D
Levee/Floodwall.....complete Section E
Sediment Transport.....complete Section F (if required)

Description Of Modeled Structure

1. Name of Structure: Existing Highway 101

   Type (check one): ☐ Channelization ☒ Bridge/Culvert ☐ Levee/Floodwall ☐ Dam

   Location of Structure: At Highway 101 Crossing of Conejo Creek

   Downstream Limit/Cross Section: Boundary Condition in 2D Model

   Upstream Limit/Cross Section: Boundary Condition in 2D Model

2. Name of Structure: Existing Adohr Lane Bridge

   Type (check one): ☐ Channelization ☒ Bridge/Culvert ☐ Levee/Floodwall ☐ Dam

   Location of Structure: At Adhor Lane/Ridge View Street Crossing of Conejo Creek

   Downstream Limit/Cross Section: Boundary Condition in 2D Model

   Upstream Limit/Cross Section: Boundary Condition in 2D Model

3. Name of Structure: _____

   Type (check one) ☐ Channelization ☐ Bridge/Culvert ☐ Levee/Floodwall ☐ Dam

   Location of Structure: _____

   Downstream Limit/Cross Section: _____

   Upstream Limit/Cross Section: _____

NOTE: FOR MORE STRUCTURES, ATTACH ADDITIONAL PAGES AS NEEDED.

B. CHANNELIZATION

Flooding Source: _____

Name of Structure: _____

1. Hydraulic Considerations

The channel was designed to carry _____ (cfs) and/or the _____-year flood.

The design elevation in the channel is based on (check one):

☐ Subcritical flow ☐ Critical flow ☐ Supercritical flow ☐ Energy grade line

If there is the potential for a hydraulic jump at the following locations, check all that apply and attach an explanation of how the hydraulic jump is controlled without affecting the stability of the channel.

☐ Inlet to channel ☐ Outlet of channel ☐ At Drop Structures ☐ At Transitions

☐ Other locations (specify): _____

2. Channel Design Plans

Attach the plans of the channelization certified by a registered professional engineer, as described in the instructions.

3. Accessory Structures

The channelization includes (check one):

☐ Levees [Attach Section E (Levee/Floodwall)] ☐ Drop structures ☐ Superelevated sections

☐ Transitions in cross sectional geometry ☐ Debris basin/detention basin [Attach Section D (Dam/Basin)] ☐ Energy dissipator

☐ Weir ☐ Other (Describe):

4. Sediment Transport Considerations

Are the hydraulics of the channel affected by sediment transport? ☐ Yes ☐ No

If yes, then fill out Section F (Sediment Transport) of Form 3. If No, then attach your explanation for why sediment transport was not considered.

C. BRIDGE/CULVERT

Flooding Source: Conejo Creek

Name of Structure: Highway 101 Crossing

1. This revision reflects (check one):

☐ Bridge/culvert not modeled in the FIS

☐ Modified bridge/culvert previously modeled in the FIS

☒ Revised analysis of bridge/culvert previously modeled in the FIS

2. Hydraulic model used to analyze the structure (e.g., HEC-2 with special bridge routine, WSPRO, HY8): HEC-RAS 2D
If different than hydraulic analysis for the flooding source, justify why the hydraulic analysis used for the flooding source could not analyze the structures. Attach justification.

3. Attach plans of the structures certified by a registered professional engineer. The plan detail and information should include the following (check the information that has been provided):

☐ Dimensions (height, width, span, radius, length)
☐ Shape (culverts only)
☐ Material
☐ Beveling or Rounding
☐ Wing Wall Angle
☐ Skew Angle
☐ Distances Between Cross Sections
☐ Erosion Protection
☐ Low Chord Elevations – Upstream and Downstream
☐ Top of Road Elevations – Upstream and Downstream
☐ Structure Invert Elevations – Upstream and Downstream
☐ Stream Invert Elevations – Upstream and Downstream
☐ Cross-Section Locations

4. Sediment Transport Considerations

Are the hydraulics of the structure affected by sediment transport? ☐ Yes ☒ No

If Yes, then fill out Section F (Sediment Transport) of Form 3. If no, then attach an explanation.

B. CHANNELIZATION

Flooding Source: _____

Name of Structure: _____

1. Hydraulic Considerations

The channel was designed to carry _____ (cfs) and/or the _____-year flood.

The design elevation in the channel is based on (check one):

☐ Subcritical flow ☐ Critical flow ☐ Supercritical flow ☐ Energy grade line

If there is the potential for a hydraulic jump at the following locations, check all that apply and attach an explanation of how the hydraulic jump is controlled without affecting the stability of the channel.

☐ Inlet to channel ☐ Outlet of channel ☐ At Drop Structures ☐ At Transitions

☐ Other locations (specify): _____

2. Channel Design Plans

Attach the plans of the channelization certified by a registered professional engineer, as described in the instructions.

3. Accessory Structures

The channelization includes (check one):

☐ Levees [Attach Section E (Levee/Floodwall)] ☐ Drop structures ☐ Superelevated sections

☐ Transitions in cross sectional geometry ☐ Debris basin/detention basin [Attach Section D (Dam/Basin)] ☐ Energy dissipator

☐ Weir ☐ Other (Describe):

4. Sediment Transport Considerations

Are the hydraulics of the channel affected by sediment transport? ☐ Yes ☐ No

If yes, then fill out Section F (Sediment Transport) of Form 3. If No, then attach your explanation for why sediment transport was not considered.

C. BRIDGE/CULVERT

Flooding Source: Conejo Creek

Name of Structure: Ridge View Street Crossing

1. This revision reflects (check one):

☐ Bridge/culvert not modeled in the FIS

☐ Modified bridge/culvert previously modeled in the FIS

☒ Revised analysis of bridge/culvert previously modeled in the FIS

2. Hydraulic model used to analyze the structure (e.g., HEC-2 with special bridge routine, WSPRO, HY8): HEC-RAS 2D
If different than hydraulic analysis for the flooding source, justify why the hydraulic analysis used for the flooding source could not analyze the structures. Attach justification.

3. Attach plans of the structures certified by a registered professional engineer. The plan detail and information should include the following (check the information that has been provided):

☐ Dimensions (height, width, span, radius, length)
☐ Shape (culverts only)
☐ Material
☐ Beveling or Rounding
☐ Wing Wall Angle
☐ Skew Angle
☐ Distances Between Cross Sections
☐ Erosion Protection
☐ Low Chord Elevations – Upstream and Downstream
☐ Top of Road Elevations – Upstream and Downstream
☐ Structure Invert Elevations – Upstream and Downstream
☐ Stream Invert Elevations – Upstream and Downstream
☐ Cross-Section Locations

4. Sediment Transport Considerations

Are the hydraulics of the structure affected by sediment transport? ☐ Yes ☒ No

If Yes, then fill out Section F (Sediment Transport) of Form 3. If no, then attach an explanation.

11. Maintenance Plan

Please attach a copy of the fomal maintenance plan for the levee/floodwall

12. Operations and Maintenance Plan

Please attach a copy of the formal Operations and Maintenance Plan for the levee/floodwall.

CERTIFICATION OF THE LEVEE DOCUMENTION

This certification is to be signed and sealed by a licensed registered professional engineer authorized by law to certify elevation information data, hydrologic and hydraulic analysis, and any other supporting information as per NFIP regulations paragraph 65.10(e) and as described in the MT-2 Forms Instructions. All documents submitted in support of this request are correct to the best of my knowledge. I understand that any false statement may be punishable by fine or imprisonment under Title 18 of the United States Code, Section 1001.

Certifier's Name: _____ License No.: _____ Expiration Date: _____

Company Name: _____ Telephone No.: _____ Fax No.: _____

Signature: _____ Date: _____ E-Mail Address: _____

F. SEDIMENT TRANSPORT

Flooding Source: _____

Name of Structure: _____

If there is any indication from historical records that sediment transport (including scour and deposition) can affect the Base Flood Elevation (BFE); and/or based on the stream morphology, vegetative cover, development of the watershed and bank conditions, there is a potential for debris and sediment transport (including scour and deposition) to affect the BFEs, then provide the following information along with the supporting documentation:

Sediment load associated with the base flood discharge: Volume _____ acre-feet

Debris load associated with the base flood discharge: Volume _____ acre-feet

Sediment transport rate _____ (percent concentration by volume)

Method used to estimate sediment transport: _____

Most sediment transport formulas are intended for a range of hydraulic conditions and sediment sizes; attach a detailed explanation for using the selected method.

Method used to estimate scour and/or deposition: _____

Method used to revise hydraulic or hydrologic analysis (model) to account for sediment transport: _____

Please note that bulked flows are used to evaluate the performance of a structure during the base flood; however, FEMA does not map BFEs based on bulked flows.

If a sediment analysis has not been performed, an explanation as to why sediment transport (including scour and deposition) will not affect the BFEs or structures must be provided.

A sediment analysis was performed for runoff in the Camarillo Springs Creek tributary to Conejo Creek, as described in the narrative. Based on the sediment analysis, the amount of sediment/debris production can be retained in an onsite basin area outside of the floodplain, and will not affect the runoff volume able to be stored within the Lake Storage Area on the Camarillo Springs Golf Course. Therefore, the sediment/debris production will not affect BFEs or structures.

NOTES TO USERS

This map is for use in administering the National Flood Insurance Program. It does not necessarily identify all areas subject to flooding, particularly from local drainage sources of small size. The **community map repository** should be consulted for possible updated or additional flood hazard information.

To obtain more detailed information in areas where **Base Flood Elevations** (BFEs) and/or **floodways** have been determined, users are encouraged to consult the Flood Profiles and Floodway Data and/or Summary of Stillwater Elevations tables contained within the Flood Insurance Study (FIS) report that accompanies this FIRM. Users should be aware that BFEs shown on the FIRM represent rounded whole-foot elevations. These BFEs are intended for flood insurance rating purposes only and should not be used as the sole source of flood elevation information. Accordingly, flood elevation data presented in the FIS report should be utilized in conjunction with the FIRM for purposes of construction and/or floodplain management.

Coastal Base Flood Elevations shown on this map apply only landward of 0.0' North American Vertical Datum of 1988 (NAVD 88). Users of this FIRM should be aware that coastal flood elevations are also provided in the Summary of Stillwater Elevations tables in the Flood Insurance Study report for this jurisdiction. Elevations shown in the Summary of Stillwater Elevations tables should be used for construction and/or floodplain management purposes when they are higher than the elevations shown on this FIRM.

Boundaries of the **floodways** were computed at cross sections and interpolated between cross sections. The floodways were based on hydraulic considerations with regard to requirements of the National Flood Insurance Program. Floodway widths and other pertinent floodway data are provided in the Flood Insurance Study report for this jurisdiction.

Certain areas not in Special Flood Hazard Areas may be protected by **flood control structures**. Refer to Section 2.4 "Flood Protection Measures" of the Flood Insurance Study report for information on flood control structures for this jurisdiction.

The **projection** used in the preparation of this map was Universal Transverse Mercator (UTM) zone 11. The **horizontal datum** was NAD 83, GRS80 spheroid. Differences in datum, spheroid, projection or UTM zones used in the production of FIRMs for adjacent jurisdictions may result in slight positional differences in map features across jurisdiction boundaries. These differences do not affect the accuracy of this FIRM.

Flood elevations on this map are referenced to the North American Vertical Datum of 1988. These flood elevations must be compared to structure and ground elevations referenced to the same **vertical datum**. For information regarding conversion between the National Geodetic Vertical Datum of 1929 and the North American Vertical Datum of 1988, visit the National Geodetic Survey website at http://www.ngs.noaa.gov or contact the National Geodetic Survey at the following address:

Spatial Reference System Division
National Geodetic Survey, NOAA
Silver Spring Metro Center
1315 East-West Highway
Silver Spring, Maryland 20910
(301) 713-3191

To obtain current elevation, description, and/or location information for **bench marks** shown on this map, please contact the Information Services Branch of the National Geodetic Survey at **(301) 713-3242**, or visit its website at http://www.ngs.noaa.gov.

Base map information shown on this FIRM was derived from U.S. Geological Survey Digital Orthophoto Quadrangles produced at a scale of 1:12,000 from photography dated 1994 or later.

This map reflects more detailed and up-to-date **stream channel configurations** than those shown on the previous FIRM for this jurisdiction. The floodplains and floodways that were transferred from the previous FIRM may have been adjusted to confirm to these new stream channel configurations. As a result, the Flood Profiles and Floodway Data tables in the Flood Insurance Study Report (which contains authoritative hydraulic data) may reflect stream channel distances that differ from what is shown on this map.

Corporate limits shown on this map are based on the best data available at the time of publication. Because changes due to annexations or de-annexations may have occurred after this map was published, map users should contact appropriate community officials to verify current corporate limit locations.

Please refer to the separately printed **Map Index** for an overview map of the county showing the layout of map panels; community map repository addresses; and a Listing of Communities table containing National Flood Insurance Program dates for each community as well as a listing of the panels on which each community is located.

Contact the **FEMA Map Service Center** at 1-800-358-9616 for information on available products associated with this FIRM. Available products may include previously issued Letters of Map Change, a Flood Insurance Study report, and/or digital versions of this map. The FEMA Map Service Center may also be reached by Fax at 1-800-358-9620 and its website at http://www.mcs.fema.gov.

If you have **questions about this map** or questions concerning the National Flood Insurance Program in general, please call **1-877-FEMA MAP** (1-877-336-2627) or visit the FEMA website at http://www.fema.gov.

Provisionally Accredited Levee Notes to Users: Check with your local community to obtain more information, such as the estimated level of protection provided (which may exceed the 1-percent-annual-chance level) and Emergency Action Plan, on the levee system(s) shown as providing protection for areas on this panel. To maintain accreditation, the levee owner or community is required to submit the data and documentation necessary to comply with Section 65.10 of the NFIP regulations by December 1, 2009. If the community or owner does not provide the necessary data and documentation or if the data and documentation provided indicate the levee system does not comply with Section 65.10 requirements, FEMA will revise the flood hazard and risk information for this area to reflect de-accreditation of the levee system. To mitigate flood risk in residual risk areas, property owners and residents are encouraged to consider flood insurance and floodproofing or other protective measures. For more information on flood insurance, interested parties should visit the FEMA Website at http://www.fema.gov/business/nfip/index.shtm.



LEGEND

SPECIAL FLOOD HAZARD AREAS SUBJECT TO INUNDATION BY THE 1% ANNUAL CHANCE FLOOD

The 1% annual flood (100-year flood), also known as the base flood, is the flood that has a 1% chance of being equaled or exceeded in any given year. The Special Flood Hazard Area is the area subject to flooding by the 1% annual chance flood. Areas of Special Flood Hazard include Zones A, AE, AH, AO, AR, A99, V, and VE. The Base Flood Elevation is the water-surface elevation of the 1% annual chance flood.

ZONE A	No Base Flood Elevations determined.
ZONE AE	Base Flood Elevations determined.
ZONE AH	Flood depths of 1 to 3 feet (usually areas of ponding); Base Flood Elevations determined.
ZONE AO	Flood depths of 1 to 3 feet (usually sheet flow on sloping terrain); average depths determined. For areas of alluvial fan flooding, velocities also determined.
ZONE AR	Special Flood Hazard Area formerly protected from the 1% annual chance flood by a flood control system that was subsequently decertified. Zone AR indicates that the former flood control system is being restored to provide protection from the 1% annual chance or greater flood.
ZONE A99	Area to be protected from 1% annual chance flood by a Federal flood protection system under construction; no Base Flood Elevations determined.
ZONE V	Coastal flood zone with velocity hazard (wave action); no Base Flood Elevations determined.
ZONE VE	Coastal flood zone with velocity hazard (wave action); Base Flood Elevations determined.

FLOODWAY AREAS IN ZONE AE

The floodway is the channel of a stream plus any adjacent floodplain areas that must be kept free of encroachment so that the 1% annual chance flood can be carried without substantial increases in flood heights.

OTHER FLOOD AREAS

ZONE X	Areas of 0.2% annual chance flood; areas of 1% annual chance flood with average depths of less than 1 foot or with drainage areas less than 1 square mile; and areas protected by levees from 1% annual chance flood.

OTHER AREAS

ZONE X	Areas determined to be outside the 0.2% annual chance floodplain.
ZONE D	Areas in which flood hazards are undetermined, but possible.

COASTAL BARRIER RESOURCES SYSTEM (CBRS) AREAS

OTHERWISE PROTECTED AREAS (OPAs)

CBRS areas and OPAs are normally located within or adjacent to Special Flood Hazard Areas.

- 1% annual chance floodplain boundary
- 0.2% annual chance floodplain boundary
- Floodway boundary
- Zone D boundary
- CBRS and OPA boundary
- Boundary dividing Special Flood Hazard Area Zones and boundary dividing Special Flood Hazard Areas of different Base Flood Elevations, flood depths or flood velocities.
- 513 — Base Flood Elevation line and value; elevation in feet*
- (EL 987) — Base Flood Elevation value where uniform within zone; elevation in feet*

* Referenced to the North American Vertical Datum of 1988

- A — A — Cross section line
- 23 — 23 — Transect line
- 87°07'45", 32°22'30" — Geographic coordinates referenced to the North American Datum of 1983 (NAD 83), Western Hemisphere
- 3776000mN — 1000-meter Universal Transverse Mercator grid values, zone 11
- 600000 FT — 5000-foot grid ticks: California State Plane coordinate system, zone V (FIPSZONE 0405), Lambert Conformal Conic projection
- DX5510 × — Bench mark (see explanation in Notes to Users section of this FIRM panel)
- M1.5 — River Mile

MAP REPOSITORY
Refer to listing of Map Repositories on Map Index

EFFECTIVE DATE OF COUNTYWIDE
FLOOD INSURANCE RATE MAP
January 20, 2010

EFFECTIVE DATE(S) OF REVISION(S) TO THIS PANEL

For community map revision history prior to countywide mapping, refer to the Community Map History table located in the Flood Insurance Study report for this jurisdiction.

To determine if flood insurance is available in this community, contact your Insurance agent or call the National Flood Insurance Program at 1-800-638-6620.

MAP SCALE 1" = 500'
250 0 500 1000 FEET
150 0 150 300 METERS

NATIONAL FLOOD INSURANCE PROGRAM

PANEL 0934E

FIRM

FLOOD INSURANCE RATE MAP

VENTURA COUNTY, CALIFORNIA AND INCORPORATED AREAS

PANEL 934 OF 1275
(SEE MAP INDEX FOR FIRM PANEL LAYOUT)

CONTAINS:

COMMUNITY	NUMBER	PANEL	SUFFIX
CAMARILLO, CITY OF	065020	0934	E
VENTURA COUNTY	060413	0934	E

Notice to User: The **Map Number** shown below should be used when placing map orders; the **Community Number** shown above should be used on insurance applications for the subject community.

MAP NUMBER
06111C0934E

EFFECTIVE DATE
JANUARY 20, 2010

Federal Emergency Management Agency

NOTES TO USERS

This map is for use in administering the National Flood Insurance Program. It does not necessarily identify all areas subject to flooding, particularly from local drainage sources of small size. The **community map repository** should be consulted for possible updated or additional flood hazard information.

To obtain more detailed information in areas where **Base Flood Elevations** (BFEs) and/or **floodways** have been determined, users are encouraged to consult the Flood Profiles and Floodway Data and/or Summary of Stillwater Elevations tables contained within the Flood Insurance Study (FIS) report that accompanies this FIRM. Users should be aware that BFEs shown on the FIRM represent rounded whole-foot elevations. These BFEs are intended for flood insurance rating purposes only and should not be used as the sole source of flood elevation information. Accordingly, flood elevation data presented in the FIS report should be utilized in conjunction with the FIRM for purposes of construction and/or floodplain management.

Coastal Base Flood Elevations shown on this map apply only landward of 0.0' North American Vertical Datum of 1988 (NAVD 88). Users of this FIRM should be aware that coastal flood elevations are also provided in the Summary of Stillwater Elevations tables in the Flood Insurance Study report for this jurisdiction. Elevations shown in the Summary of Stillwater Elevations tables should be used for construction and/or floodplain management purposes when they are higher than the elevations shown on this FIRM.

Boundaries of the **floodways** were computed at cross sections and interpolated between cross sections. The floodways were based on hydraulic considerations with regard to requirements of the National Flood Insurance Program. Floodway widths and other pertinent floodway data are provided in the Flood Insurance Study report for this jurisdiction.

Certain areas not in Special Flood Hazard Areas may be protected by **flood control structures**. Refer to Section 2.4 "Flood Protection Measures" of the Flood Insurance Study report for information on flood control structures for this jurisdiction.

The **projection** used in the preparation of this map was Universal Transverse Mercator (UTM) zone 11. The **horizontal datum** was NAD 83, GRS80 spheroid. Differences in datum, spheroid, projection or UTM zones used in the production of FIRMs for adjacent jurisdictions may result in slight positional differences in map features across jurisdiction boundaries. These differences do not affect the accuracy of this FIRM.

Flood elevations on this map are referenced to the North American Vertical Datum of 1988. These flood elevations must be compared to structure and ground elevations referenced to the same **vertical datum**. For information regarding conversion between the National Geodetic Vertical Datum of 1929 and the North American Vertical Datum of 1988, visit the National Geodetic Survey website at http://www.ngs.noaa.gov or contact the National Geodetic Survey at the following address:

Spatial Reference System Division
National Geodetic Survey, NOAA
Silver Spring Metro Center
1315 East-West Highway
Silver Spring, Maryland 20910
(301) 713-3191

To obtain current elevation, description, and/or location information for **bench marks** shown on this map, please contact the Information Services Branch of the National Geodetic Survey at **(301) 713-3242**, or visit its website at http://www.ngs.noaa.gov.

Base map information shown on this FIRM was derived from U.S. Geological Survey Digital Orthophoto Quadrangles produced at a scale of 1:12,000 from photography dated 1994 or later.

This map reflects more detailed and up-to-date **stream channel configurations** than those shown on the previous FIRM for this jurisdiction. The floodplains and floodways that were transferred from the previous FIRM may have been adjusted to confirm to these new stream channel configurations. As a result, the Flood Profiles and Floodway Data tables in the Flood Insurance Study Report (which contains authoritative hydraulic data) may reflect stream channel distances that differ from what is shown on this map.

Corporate limits shown on this map are based on the best data available at the time of publication. Because changes due to annexations or de-annexations may have occurred after this map was published, map users should contact appropriate community officials to verify current corporate limit locations.

Please refer to the separately printed **Map Index** for an overview map of the county showing the layout of map panels; community map repository addresses; and a Listing of Communities table containing National Flood Insurance Program dates for each community as well as a listing of the panels on which each community is located.

Contact the **FEMA Map Service Center** at 1-800-358-9616 for information on available products associated with this FIRM. Available products may include previously issued Letters of Map Change, a Flood Insurance Study report, and/or digital versions of this map. The FEMA Map Service Center may also be reached by Fax at 1-800-358-9620 and its website at http://www.mcs.fema.gov.

If you have **questions about this map** or questions concerning the National Flood Insurance Program in general, please call **1-877-FEMA MAP** (1-877-336-2627) or visit the FEMA website at http://www.fema.gov.

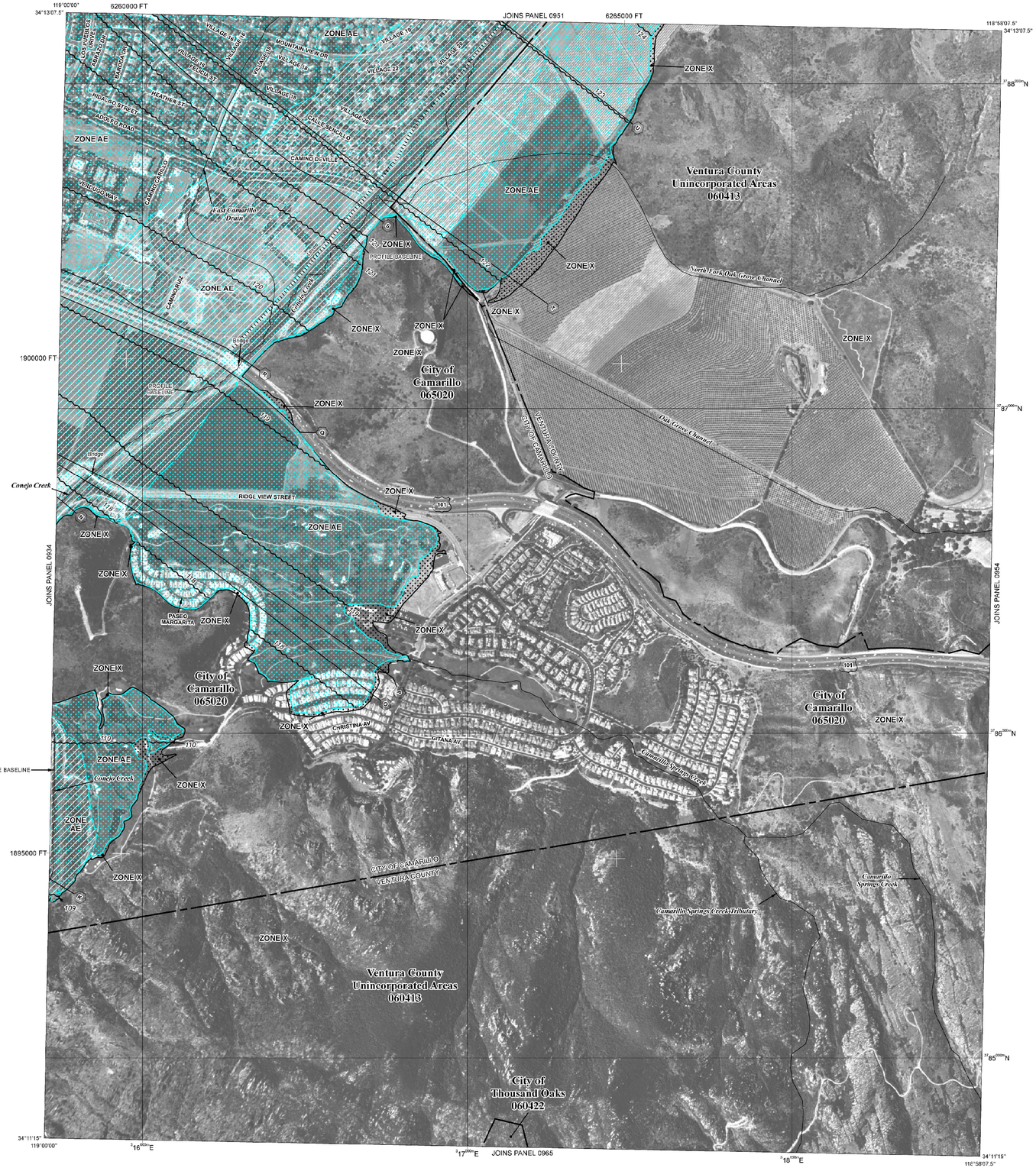

LEGEND

SPECIAL FLOOD HAZARD AREAS SUBJECT TO INUNDATION BY THE 1% ANNUAL CHANCE FLOOD

The 1% annual flood (100-year flood), also known as the base flood, is the flood that has a 1% chance of being equaled or exceeded in any given year. The Special Flood Hazard Area is the area subject to flooding by the 1% annual chance flood. Areas of Special Flood Hazard include Zones A, AE, AH, AO, AR, A99, V, and VE. The Base Flood Elevation is the water-surface elevation of the 1% annual chance flood.

ZONE A	No Base Flood Elevations determined.
ZONE AE	Base Flood Elevations determined.
ZONE AH	Flood depths of 1 to 3 feet (usually areas of ponding); Base Flood Elevations determined.
ZONE AO	Flood depths of 1 to 3 feet (usually sheet flow on sloping terrain); average depths determined. For areas of alluvial fan flooding, velocities also determined.
ZONE AR	Special Flood Hazard Area formerly protected from the 1% annual chance flood by a flood control system that was subsequently decertified. Zone AR indicates that the former flood control system is being restored to provide protection from the 1% annual chance or greater flood.
ZONE A99	Area to be protected from 1% annual chance flood by a Federal flood protection system under construction; no Base Flood Elevations determined.
ZONE V	Coastal flood zone with velocity hazard (wave action); no Base Flood Elevations determined.
ZONE VE	Coastal flood zone with velocity hazard (wave action); Base Flood Elevations determined.

FLOODWAY AREAS IN ZONE AE

The floodway is the channel of a stream plus any adjacent floodplain areas that must be kept free of encroachment so that the 1% annual chance flood can be carried without substantial increases in flood heights.

OTHER FLOOD AREAS

ZONE X	Areas of 0.2% annual chance flood; areas of 1% annual chance flood with average depths of less than 1 foot or with drainage areas less than 1 square mile; and areas protected by levees from 1% annual chance flood.

OTHER AREAS

ZONE X	Areas determined to be outside the 0.2% annual chance floodplain.
ZONE D	Areas in which flood hazards are undetermined, but possible.

COASTAL BARRIER RESOURCES SYSTEM (CBRS) AREAS

OTHERWISE PROTECTED AREAS (OPAs)

CBRS areas and OPAs are normally located within or adjacent to Special Flood Hazard Areas.

	1% annual chance floodplain boundary
	0.2% annual chance floodplain boundary
	Floodway boundary
	Zone D boundary
	CBRS and OPA boundary
	Boundary dividing Special Flood Hazard Area Zones and boundary dividing Special Flood Hazard Areas of different Base Flood Elevations, flood depths or flood velocities.
513	Base Flood Elevation line and value; elevation in feet*
(EL 987)	Base Flood Elevation value where uniform within zone; elevation in feet*

* Referenced to the North American Vertical Datum of 1988

A — A	Cross section line
23 — 23	Transect line
87°07'45", 32°22'30"	Geographic coordinates referenced to the North American Datum of 1983 (NAD 83), Western Hemisphere
3°76'000"N	1000-meter Universal Transverse Mercator grid values, zone 11
600000 FT	5000-foot grid ticks: California State Plane coordinate system, zone V (FIPSZONE 0405), Lambert Conformal Conic projection
DX5510 ×	Bench mark (see explanation in Notes to Users section of this FIRM panel)
● M1.5	River Mile

MAP REPOSITORY
Refer to listing of Map Repositories on Map Index

EFFECTIVE DATE OF COUNTYWIDE
FLOOD INSURANCE RATE MAP
January 20, 2010

EFFECTIVE DATE(S) OF REVISION(S) TO THIS PANEL

For community map revision history prior to countywide mapping, refer to the Community Map History table located in the Flood Insurance Study report for this jurisdiction.

To determine if flood insurance is available in this community, contact your Insurance agent or call the National Flood Insurance Program at 1-800-638-6620.

MAP SCALE 1" = 500'

250 0 500 1000 FEET

150 0 150 300 METERS

NFIP

NATIONAL FLOOD INSURANCE PROGRAM

PANEL 0953E

FIRM

FLOOD INSURANCE RATE MAP

VENTURA COUNTY, CALIFORNIA AND INCORPORATED AREAS

PANEL 953 OF 1275

(SEE MAP INDEX FOR FIRM PANEL LAYOUT)

CONTAINS:

COMMUNITY	NUMBER	PANEL	SUFFIX
CAMARILLO, CITY OF	065020	0953	E
THOUSAND OAKS, CITY OF	060422	0953	E
VENTURA COUNTY	060413	0953	E

Notice to User: The **Map Number** shown below should be used when placing map orders; the **Community Number** shown above should be used on insurance applications for the subject community.

MAP NUMBER
06111C0953E

EFFECTIVE DATE
JANUARY 20, 2010

Federal Emergency Management Agency

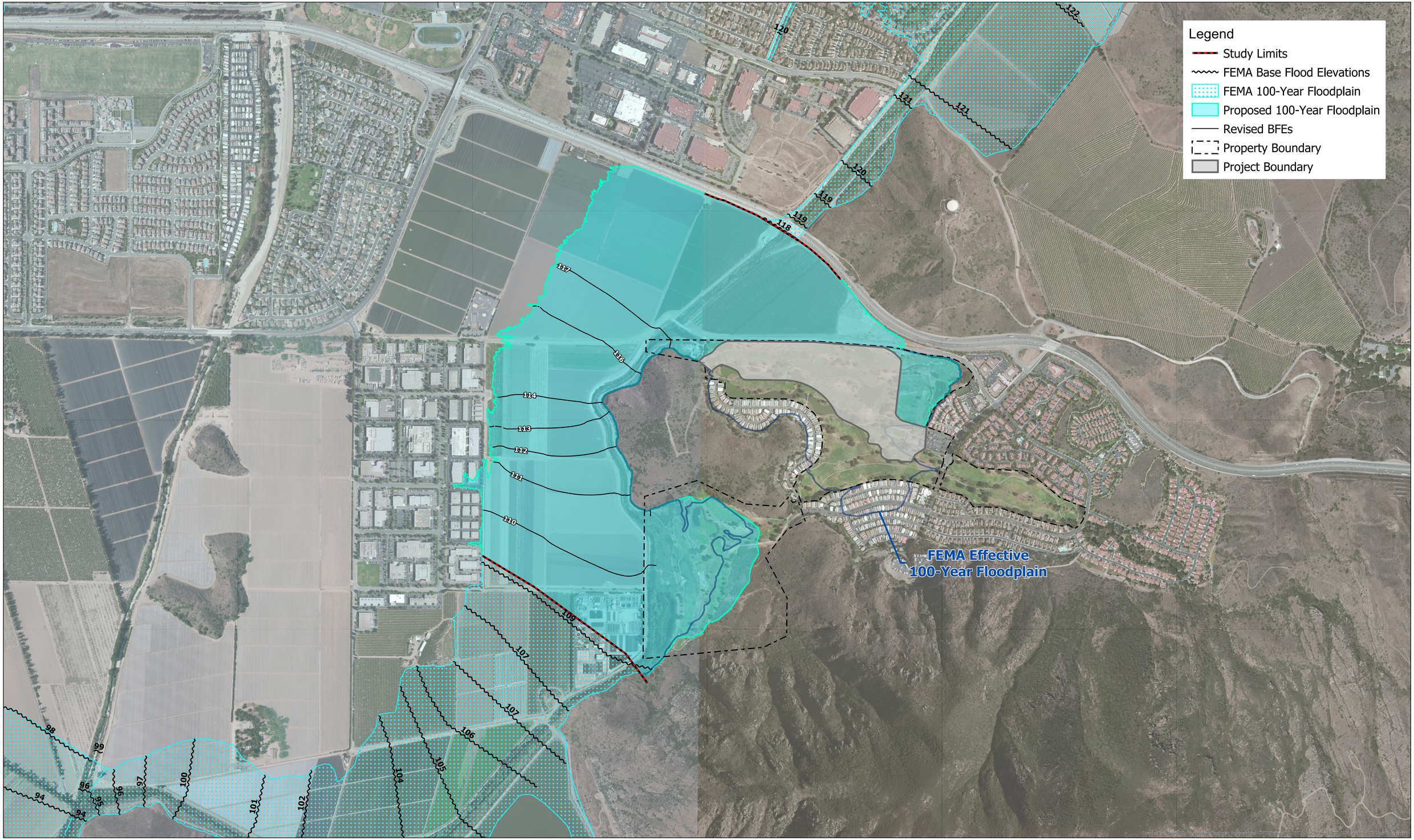

C:\Users\ahashimoto\Documents\ArcGIS\Projects\B306 Copy.aprx - Annotated FIRM2

CAMARILLO SPRINGS

ANNOTATED FIRM

PACE Advanced Water Engineering

0 500 1,000 2,000 Feet

Date: 10/31/2018

Job Number: B306

EXHIBIT A



Appendix B

LOCATION	SUBAREA AREA	SUBAREA Q	TOTAL AREA	TOTAL Q	CONV TYPE	CONV LNGTH	CONV SLOPE	CONV SIZE	CONV Z	CONTROL Q	SOIL NAME	TC	RAIN ZONE	PCT IMPV
15031 3705DE	240.	506.	1210.	2858.	0	0.	0.00000	0.00	0.00	0.	10	0	B98	0.00

CONFLUENCE Q'S

15031 3706B TB 1224 QB 37496. QBD 37716. QD 220. 15031 3706D TD 1163 QD 2858. QDB 19446. QB 16588.

15031 3706BD TBD 1224 QBD 37716. QB 37496. QD 220.

LOCATION	SUBAREA AREA	SUBAREA Q	TOTAL AREA	TOTAL Q	CONV TYPE	CONV LNGTH	CONV SLOPE	CONV SIZE	CONV Z	CONTROL Q	SOIL NAME	TC	RAIN ZONE	PCT IMPV
15031 3706BD	1210.	2858.	45092.	37716.	5	1400.	0.00100	100.00	2.00	0.	10	0	B98	0.00
15031 3707C	37.	122.	37.	122.	0	0.	0.00000	0.00	0.00	0.	10	10	B98	0.23
15031 3708C	50.	184.	87.	306.	4	2300.	0.00300	6.50	0.00	0.	10	8	B98	0.30
15031 3709D	111.	270.	111.	270.	4	1500.	0.00300	6.25	0.00	0.	50	12	B98	0.26
15031 3710D	79.	201.	190.	431.	0	0.	0.00000	0.00	0.00	0.	50	11	B98	0.23
15031 3711CD	190.	431.	277.	687.	5	700.	0.00300	11.00	0.00	0.	10	0	B98	0.00
15031 3712E	56.	194.	56.	194.	4	1700.	0.01000	4.50	0.00	0.	10	9	B98	0.21
15031 3713E	70.	277.	126.	429.	4	900.	0.00200	8.00	0.00	0.	10	7	B98	0.30
15031 3714E	31.	108.	157.	489.	4	1700.	0.00300	7.75	0.00	0.	20	8	B98	0.22
15031 3715E	33.	77.	190.	523.	0	0.	0.00000	0.00	0.00	0.	40	14	B98	0.23
15031 3716E	50.	141.	240.	638.	5	2100.	0.00300	11.00	0.00	0.	20	12	B98	0.29
15031 3717E	0.	0.	240.	603.	0	0.	0.00000	0.00	0.00	0.	10	99	B98	0.00

CONFLUENCE Q'S

15031 3718D TD 1159 QD 431. QDE 474. QE 474. 15031 3718E TE 1164 QE 603. QED 603. QD 0.

15031 3718DE TDE 1164 QDE 603. QD 0. QE 603.

LOCATION	SUBAREA AREA	SUBAREA Q	TOTAL AREA	TOTAL Q	CONV TYPE	CONV LNGTH	CONV SLOPE	CONV SIZE	CONV Z	CONTROL Q	SOIL NAME	TC	RAIN ZONE	PCT IMPV
15031 3718DE	240.	603.	240.	603.	5	600.	0.00300	3.00	1.50	0.	10	0	B98	0.00
15031 3719C	70.	178.	347.	831.	5	700.	0.00300	5.00	1.50	0.	40	12	B98	0.23
15031 3720C	64.	177.	411.	934.	5	300.	0.00300	5.00	1.50	0.	50	12	B98	0.65
15031 3721D	73.	162.	313.	703.	5	4300.	0.00300	12.00	0.00	0.	40	15	B98	0.20
15031 3722D	61.	165.	374.	656.	0	0.	0.00000	0.00	0.00	0.	40	13	B98	0.65

CONFLUENCE Q'S

15031 3723C TC 1162 QC 928. QCD 1430. QD 502. 15031 3723D TD 1171 QD 656. QDC 1124. QC 469.

15031 3723CD TCD 1164 QCD 1447. QC 900. QD 548.

LOCATION	SUBAREA AREA	SUBAREA Q	TOTAL AREA	TOTAL Q	CONV TYPE	CONV LNGTH	CONV SLOPE	CONV SIZE	CONV Z	CONTROL Q	SOIL NAME	TC	RAIN ZONE	PCT IMPV
15031 3723CD	374.	656.	785.	1447.	5	900.	0.00300	6.00	1.50	0.	10	0	B98	0.00
15031 3724C	59.	148.	844.	1514.	0	0.	0.00000	0.00	0.00	0.	30	15	B98	0.54

VENTURA COUNTY FLOOD CONTROL DISTRICT
MODIFIED RATIONAL METHOD HYDROLOGY / PC 2.21-952

CALLEGUAS CRK.W/EXISTG.DAMS & INC CONEJO,Q100P,DBT/DL/OR,11/2002 STORM DAY 4

LOCATION	SUBAREA AREA	SUBAREA Q	TOTAL AREA	TOTAL Q	CONV TYPE	CONV LNGTH	CONV SLOPE	CONV SIZE	CONV Z	CONTROL Q	SOIL NAME	TC	RAIN ZONE	PCT IMPV

CONFLUENCE Q'S

15031 3725B TB 1227 QB 37622. QBC 37819. QC 197. 15031 3725C TC 1166 QC 1514. QCB 20701. QB 19186.

15031 3725BC TBC 1227 QBC 37819. QB 37622. QC 197.

LOCATION	SUBAREA AREA	SUBAREA Q	TOTAL AREA	TOTAL Q	CONV TYPE	CONV LNGTH	CONV SLOPE	CONV SIZE	CONV Z	CONTROL Q	SOIL NAME	TC	RAIN ZONE	PCT IMPV
15031 3725BC	844.	1514.	45936.	37819.	3	800.	0.00100	100.00	2.00	0.	10	0	B98	0.00
15031 3726B	0.	0.	45936.	37667.	0	0.	0.00000	0.00	0.00	0.	10	99	B98	0.00
15031 3727B	82.	220.	46018.	37684.	5	2100.	0.00100	100.00	2.00	0.	10	14	B98	0.00
15031 3728B	73.	122.	46091.	37501.	5	200.	0.00100	100.00	2.00	0.	40	21	B98	0.00

LOCATION	SUBAREA AREA	SUBAREA Q	TOTAL AREA	TOTAL Q	CONV TYPE	CONV LNGTH	CONV SLOPE	CONV SIZE	CONV Z	CONTROL Q	SOIL NAME	TC	RAIN ZONE	PCT IMPV
15031 3729C	48.	101.	48.	101.	5	1350.	0.00200	4.00	2.00	0.	50	14	B98	0.12
15031 3730C	55.	88.	103.	163.	5	2000.	0.00200	10.00	2.00	0.	50	20	B98	0.05
15031 3731C	70.	120.	173.	201.	0	0.	0.00000	0.00	0.00	0.	40	20	B98	0.00

CONFLUENCE Q'S

15031 3732B TB 1236 QB 37499. QBC 37507. QC 8. 15031 3732C TC 1168 QC 201. QCB 17440. QB 17239.

15031 3732BC TBC 1236 QBC 37507. QB 37499. QC 8.

LOCATION	SUBAREA AREA	SUBAREA Q	TOTAL AREA	TOTAL Q	CONV TYPE	CONV LNGTH	CONV SLOPE	CONV SIZE	CONV Z	CONTROL Q	SOIL NAME	TC	RAIN ZONE	PCT IMPV
15031 3732BC	173.	201.	46264.	37507.	5	190.	0.00100	100.00	2.00	0.	10	0	B98	0.00
15031 3733C	0.	0.	0.	201.	0	0.	0.00000	0.00	0.00	0.	10	99	B98	0.00
15031 3734C	90.	264.	90.	264.	5	1500.	0.07000	4.00	1.50	0.	10	12	B98	0.00
15031 3735C	53.	182.	143.	441.	5	2300.	0.10000	5.00	0.00	0.	10	9	B98	0.00
15031 3736C	63.	219.	206.	643.	0	0.	0.00000	0.00	0.00	0.	10	9	B98	0.26
15031 3737D	64.	188.	64.	188.	1	1400.	0.22000	0.00	0.00	0.	10	12	B98	0.00
15031 3738D	40.	117.	104.	299.	1	1100.	0.22000	0.00	0.00	0.	10	12	B98	0.00
15031 3739E	80.	247.	80.	247.	1	2000.	0.09000	0.00	0.00	0.	10	11	B98	0.00
15031 3740E	80.	247.	160.	452.	1	2200.	0.26000	0.00	0.00	0.	10	11	B98	0.00
15031 3741E	105.	294.	265.	711.	0	0.	0.00000	0.00	0.00	0.	10	13	B98	0.00
15031 3742DE	265.	711.	369.	1007.	5	900.	0.12000	6.00	0.00	0.	10	0	B98	0.00
15031 3743D	63.	206.	432.	1180.	0	0.	0.00000	0.00	0.00	0.	10	10	B98	0.00
15031 3744CD	432.	1180.	638.	1799.	5	1300.	0.03000	20.00	9.99	0.	10	0	B98	0.00
15031 3745C	101.	331.	739.	2004.	5	1400.	0.03000	20.00	9.99	0.	10	10	B98	0.04
15031 3746C	85.	313.	824.	2046.	0	0.	0.00000	0.00	0.00	0.	10	8	B98	0.34
15031 3747D	0.	0.	0.	1180.	0	0.	0.00000	0.00	0.00	0.	10	99	B98	0.00
15031 3748D	58.	190.	58.	190.	1	2400.	0.16000	0.00	0.00	0.	10	10	B98	0.00
15031 3749D	77.	268.	135.	405.	0	0.	0.00000	0.00	0.00	0.	20	8	B98	0.15
15031 3750CD	135.	405.	959.	2401.	5	1400.	0.00500	20.00	8.00	0.	10	0	B98	0.00
15031 3751C	59.	147.	1018.	2324.	5	1300.	0.00150	20.00	9.99	0.	30	13	B98	0.15
15031 3752C	80.	225.	1098.	2179.	5	2000.	0.00100	20.00	9.99	0.	10	13	B98	0.09
15031 3753C	60.	184.	1158.	1914.	0	0.	0.00000	0.00	0.00	0.	20	10	B98	0.07
15031 3754C	95.	248.	1253.	1938.	0	0.	0.00000	0.00	0.00	0.	20	13	B98	0.09

CONFLUENCE Q'S

15031 3755B TB 1236 QB 37495. QBC 37858. QC 363. 15031 3755C TC 1181 QC 1938. QCB 24085. QB 22148.

15031 3755BC TBC 1236 QBC 37858. QB 37495. QC 363.

LOCATION	SUBAREA AREA	SUBAREA Q	TOTAL AREA	TOTAL Q	CONV TYPE	CONV LNGTH	CONV SLOPE	CONV SIZE	CONV Z	CONTROL Q	SOIL NAME	TC	RAIN ZONE	PCT IMPV

VENTURA COUNTY FLOOD CONTROL DISTRICT
MODIFIED RATIONAL METHOD HYDROLOGY / PC 2.21-952

CALLEGUAS CRK.W/EXISTG.DAMS & INC CONEJO,Q100P,DBT/DL/OR,11/2002 STORM DAY 4

LOCATION	SUBAREA AREA	SUBAREA Q	TOTAL AREA	TOTAL Q	CONV TYPE	CONV LNGTH	CONV SLOPE	CONV SIZE	CONV Z	CONTROL Q	SOIL NAME	TC	RAIN ZONE	PCT IMPV
15031 3755BC	1253.	1938.	47517.	37858.	5	1850.	0.00100	100.00	2.00	0.	10	0	B98	0.00
15031 3756B	0.	0.	47517.	37689.	0	0.	0.00000	0.00	0.00	0.	10	99	B98	0.00
15031 3757D	52.	135.	52.	135.	5	1350.	0.00400	6.00	2.00	0.	50	14	B98	0.70
15031 3758D	53.	94.	105.	210.	0	0.	0.00000	0.00	0.00	0.	40	19	B98	0.00

CONFLUENCE Q'S

15031 3759B TB 1241 QB 37689. QBD 37707. QD 18. 15031 3759D TD 1162 QD 210. QDB 15252. QB 15043.

15031 3759BD TBD 1241 QBD 37707. QB 37689. QD 18.

LOCATION	SUBAREA AREA	SUBAREA Q	TOTAL AREA	TOTAL Q	CONV TYPE	CONV LNGTH	CONV SLOPE	CONV SIZE	CONV Z	CONTROL Q	SOIL NAME	TC	RAIN ZONE	PCT IMPV
15031 3759BD	105.	210.	47622.	37707.	5	1200.	0.00070	100.00	2.00	0.	10	0	B98	0.00
15031 3760B	0.	0.	47622.	37629.	0	0.	0.00000	0.00	0.00	0.	10	99	B98	0.00
15031 3761C	40.	104.	40.	104.	3	1750.	0.00400	6.00	2.00	0.	50	14	B98	0.70
15031 3762C	44.	56.	84.	122.	0	0.	0.00000	0.00	0.00	0.	60	19	B98	0.00

MODEL	LOCATION POINT FOR FLOWRATE VALUES LISTED	AREA	2 YR WITH AR	5 YR WITH AR	10 YR WITH AR	50 YR WITH AR	100 YR WITH AR	500 YR WITH AR
Multipliers Developed from Stream Gage Data		(ACRES)	0.142	0.287	0.416	0.796	AERIAL RED	1.587
			(m+u+n)	(m+u+n)	(m+u+n)	(m+u+n)		
ID NO	CALLEGUAS CRK.W/EXISTG. DAMS & INC CONEJO PRESENT	(ACRES)	(cfs)	(cfs)	(cfs)	(cfs)	(cfs)	(cfs)
3572b	Conejo After Junction	38510	3,299	6,667	9,664	18,492	23,231	36,867
3577	Barbara Drive Drn at Sta Rosa Rd							
3597BC	CONEJO CREEK AFTER JCT. W/ BARBARA DRIVE DRAIN	39701	3,307	6,684	9,688	18,538	23,289	36,960
3616b	Conejo ck	40857	3,328	6,726	9,749	18,655	23,435	37,192
3621C	CAMROSA DRAIN PRIOR TO JCT. W/CONEJO CREEK	409	109	221	321	614	771	1,224
3630BD	CONEJO CREEK AT GAGE VC800	41370	3,313	6,696	9,706	18,571	23,331	37,026
3634b	Conejo	41582	3,299	6,668	9,665	18,494	23,234	36,873
3647C	UPLAND RD.DRN.PRIOR TO JCT. W/CONEJO CK.	592	209	423	613	1,173	1,473	2,338
3648BC	CONEJO CREEK AFTER JCT.W/ UPLAND RD. DRN.	42174	3,298	6,665	9,661	18,486	23,223	36,855
3649B	CONEJO CREEK b4 Leisure Village	42241	3,299	6,667	9,663	18,490	23,229	36,864
3677D	MISSION OAKS DRN. PRIOR TO JCT.W/CONEJO CR.	448	139	281	407	778	978	1,552
3678b	Conejo	43220	3,216	6,501	9,422	18,029	22,650	35,945
3680BD	CONEJO CREEK AFTER JCT.W/MISSION OAKS DRN.	43668	3,305	6,680	9,682	18,527	23,275	36,937
3682b	Conejo	43830	3,292	6,653	9,644	18,453	23,183	36,791
3705DE	OAK GROVE CHANNEL PRIOR TO JCT.W/CONEJO CR.	1210	380	768	1,113	2,129	2,675	4,245
3706BD	CONEJO CREEK AFTER JCT. W/OAK GROVE CHL.	45092	3,283	6,635	9,618	18,403	23,120	36,691
3724C	EAST CAMARILLO DRN.PRIOR TO JCT. W/ CONEJO CR.	844	205	415	602	1,151	1,446	2,295
3725BC	CONEJO CREEK AFTER JCT.W/ EAST CAMARILLO DRN.	45936	3,276	6,621	9,597	18,363	23,070	36,611
3727B	CONEJO CREEK AT HWY 101 W/SO BR.ARR.CON. BASINS	46018	3,264	6,597	9,563	18,298	22,987	36,481
3755BC	CONEJO CR. AT RIDGE VIEWS ST. (NEXT TO ADOHR LANE)	47517	3,263	6,595	9,560	18,292	22,980	36,469
3788BC	CONEJO CREEK AT HOWARD ROAD	48878	3,185	6,436	9,329	17,852	22,427	35,591
3800BC	CONEJO CREEK AT PANCHO ROAD	49164	3,178	6,422	9,309	17,813	22,378	35,514
3811BE	CONEJO CREEK PRIOR TO JCT.W/CALLEGUAS CK.	49677	3,173	6,412	9,295	17,785	22,343	35,458
3812AB	CALLEGUAS CK. AFTER JCT.W/CONEJO CREEK	158933	5,461	11,037	15,998	30,611	38,456	61,029
3818a	Done for request by APS	158972	5,448	11,010	15,959	30,537	38,363	60,882
3839a	Done for request by APS	159412	5,451	11,018	15,970	30,558	38,389	60,924
3850AC	CALLEGUAS CK. AT CSUCI ACCESS RD.(GAGE 805) (CS3)	159771	5,456	11,026	15,982	30,582	38,419	60,971

HYDROGRAPH FATTENED AT 3683B

INCOMING HYDROGRAPH PEAK (cfs):	37495.52	VOLUME (acre-ft):	13405.31		
HYDROGRAPH ADJUSTMENT FACTOR:	0.61600				
ADJUSTED HYDROGRAPH PEAK (cfs):	23097.24	VOLUME (acre-ft):	8257.67		
RUNOFF FACTOR(in):	4.66				
FATTENED HYDROGRAPH PEAK (cfs):	23097.24	VOLUME (acre-ft):	17032.43		

TIME (min)	PRE-ADJ (cfs)	PRE-FAT (cfs)	FATTENED (cfs)	TIME (min)	PRE-ADJ (cfs)	PRE-FAT (cfs)	FATTENED (cfs)
0	0.00	0.00	0.00	100	1614.46	994.51	1346.94
200	1632.31	1005.50	1831.99	300	1795.54	1106.05	2093.54
400	2189.91	1348.98	2542.26	500	2645.33	1629.52	3100.22
600	3043.99	1875.10	3739.27	700	3496.84	2154.05	4592.82
800	4023.43	2478.43	5799.75	900	4770.62	2938.70	7685.07
1000	6247.01	3848.16	10951.79	1050	7548.17	4649.67	13417.62
1100	9475.45	5836.87	16538.21	1110	9956.18	6133.00	17225.43
1120	10514.16	6476.72	17931.38	1130	11242.03	6925.09	18661.11
1131	11322.08	6974.40	18734.32	1132	11402.16	7023.73	18807.31
1133	11484.29	7074.32	18880.38	1134	11568.99	7126.50	18953.58
1135	11655.33	7179.68	19026.74	1136	11742.00	7233.07	19099.67
1137	11833.04	7289.15	19172.94	1138	11925.39	7346.04	19246.07
1139	12019.79	7404.19	19319.13	1140	12118.12	7464.76	19392.37
1141	12223.11	7529.44	19466.18	1142	12334.15	7597.83	19540.37
1143	12448.78	7668.45	19614.56	1144	12566.36	7740.88	19688.65
1145	12689.10	7816.49	19762.90	1146	12815.64	7894.43	19837.06
1147	12944.18	7973.61	19910.87	1148	13077.94	8056.01	19984.73
1149	13230.09	8149.74	20060.22	1150	13385.91	8245.72	20135.41
1151	13532.94	8336.29	20208.74	1152	13731.11	8458.36	20287.37
1153	13918.67	8573.90	20363.76	1154	14112.27	8693.16	20439.86
1155	14328.46	8826.33	20517.50	1156	14556.09	8966.55	20595.24
1157	14791.44	9111.52	20672.62	1158	15040.21	9264.77	20750.20
1159	15293.22	9420.62	20826.91	1160	15568.88	9590.43	20904.59
1161	15894.68	9791.12	20985.70	1162	16223.10	9993.43	21065.43
1163	16592.01	10220.68	21147.21	1164	16996.25	10469.69	21230.40
1165	17422.63	10732.34	21313.50	1166	17875.46	11011.29	21396.80
1167	18330.21	11291.41	21478.01	1168	18774.40	11565.03	21556.13
1169	19194.88	11824.05	21630.16	1170	19578.21	12060.17	21699.22
1171	19934.58	12279.70	21764.31	1172	20256.96	12478.29	21825.09
1173	20535.87	12650.10	21881.11	1174	20776.90	12798.57	21933.03
1175	20987.79	12928.48	21981.61	1176	21175.18	13043.91	22027.44
1177	21346.28	13149.31	22071.16	1178	21507.62	13248.70	22113.26
1179	21665.10	13345.70	22154.13	1180	21824.60	13443.95	22194.14
1181	21990.48	13546.13	22233.52	1182	22160.29	13650.74	22272.11
1183	22333.53	13757.46	22309.85	1184	22511.04	13866.80	22346.76
1185	22692.70	13978.70	22382.81	1186	22877.23	14092.37	22417.94
1187	23063.38	14207.04	22452.08	1188	23249.78	14321.86	22485.13
1189	23436.01	14436.58	22517.13	1190	23622.77	14551.62	22548.10
1191	23812.19	14668.31	22578.09	1192	24007.28	14788.49	22607.26

Hydrograph Printouts

TIME (min)	PRE-ADJ (cfs)	PRE-FAT (cfs)	FATTENED (cfs)	TIME (min)	PRE-ADJ (cfs)	PRE-FAT (cfs)	FATTENED (cfs)
1193	24213.70	14915.64	22635.75	1194	24431.66	15049.90	22663.51
1195	24661.25	15191.33	22690.58	1196	24905.91	15342.04	22716.93
1197	25167.95	15503.46	22742.64	1198	25448.53	15676.29	22767.65
1199	25748.52	15861.09	22791.97	1200	26070.02	16059.13	22815.58
1201	26415.68	16272.06	22838.46	1202	26791.44	16503.52	22860.74
1203	27189.19	16748.54	22882.12	1204	27608.24	17006.68	22902.55
1205	28054.01	17281.27	22922.15	1206	28533.34	17576.54	22940.96
1207	29053.89	17897.19	22959.04	1208	29621.24	18246.68	22976.43
1209	30218.84	18614.80	22992.79	1210	30848.04	19002.39	23008.14
1211	31512.08	19411.44	23022.49	1212	32208.01	19840.13	23035.80
1213	32910.90	20273.11	23047.78	1214	33600.77	20698.07	23058.33
1215	34269.39	21109.95	23067.46	1216	34905.75	21501.94	23075.20
1217	35482.81	21857.41	23081.48	1218	35991.13	22170.54	23086.42
1219	36427.30	22439.22	23090.23	1220	36790.24	22662.79	23093.01
1221	37079.57	22841.01	23094.96	1222	37293.50	22972.80	23096.22
1223	37431.52	23057.82	23096.93	1224	37495.52	23097.24	23097.24
1225	37490.59	23094.20	23097.20	1226	37421.86	23051.86	23096.85
1227	37295.20	22973.84	23096.13	1228	37118.28	22864.86	23095.00
1229	36897.02	22728.57	23093.37	1230	36637.50	22568.70	23091.23
1231	36341.78	22386.54	23088.44	1232	36015.32	22185.44	23084.99
1233	35663.14	21968.50	23080.86	1234	35291.41	21739.51	23075.98
1235	34907.02	21502.72	23070.36	1236	34515.71	21261.68	23063.99
1237	34123.85	21020.29	23056.89	1238	33732.67	20779.33	23049.04
1239	33340.84	20537.96	23040.39	1240	32950.31	20297.39	23030.91
1241	32562.25	20058.35	23020.58	1242	32181.64	19823.89	23009.45
1243	31812.44	19596.46	22997.59	1244	31454.16	19375.76	22984.99
1245	31111.75	19164.84	22971.73	1246	30778.13	18959.33	22957.68
1247	30454.58	18760.02	22942.88	1248	30140.15	18566.33	22927.31
1249	29834.28	18377.92	22910.97	1250	29537.85	18195.32	22893.85
1251	29249.11	18017.45	22875.94	1252	28968.55	17844.62	22857.28
1253	28697.19	17677.47	22837.86	1254	28426.78	17510.90	22817.50
1255	28157.83	17345.22	22796.14	1256	27888.55	17179.35	22773.75
1257	27619.22	17013.44	22750.31	1258	27349.81	16847.48	22725.80
1259	27081.08	16681.95	22700.25	1260	26813.12	16516.88	22673.62
1261	26548.40	16353.81	22646.02	1262	26287.00	16192.79	22617.45
1263	26027.26	16032.79	22587.84	1264	25766.42	15872.12	22557.06
1265	25503.78	15710.33	22525.05	1266	25240.37	15548.07	22491.87
1267	24977.29	15386.01	22457.53	1268	24715.20	15224.56	22422.10
1269	24454.79	15064.15	22385.55	1270	24196.81	14905.24	22347.99
1271	23944.35	14749.72	22309.57	1272	23694.05	14595.53	22270.12
1273	23441.04	14439.68	22229.35	1274	23186.19	14282.69	22187.30
1275	22930.93	14125.45	22144.04	1276	22676.22	13968.55	22099.62
1277	22422.67	13812.37	22054.12	1278	22172.03	13657.97	22007.62
1279	21925.32	13506.00	21960.25	1280	21687.41	13359.45	21912.39
1281	21452.18	13214.54	21863.61	1282	21214.97	13068.42	21813.56
1283	20977.15	12921.92	21762.33	1284	20740.32	12776.04	21710.10
1285	20505.73	12631.53	21656.94	1286	20274.59	12489.14	21602.97
1287	20047.58	12349.31	21548.28	1288	19824.61	12211.96	21492.90
1289	19610.92	12080.33	21437.35	1290	19399.01	11949.79	21380.96

Hydrograph Printouts

TIME (min)	PRE-ADJ (cfs)	PRE-FAT (cfs)	FATTENED (cfs)	TIME (min)	PRE-ADJ (cfs)	PRE-FAT (cfs)	FATTENED (cfs)
1291	19188.51	11820.12	21323.73	1292	18978.91	11691.01	21265.60
1293	18769.70	11562.13	21206.56	1294	18562.52	11434.51	21146.75
1295	18357.86	11308.44	21086.27	1296	18156.89	11184.64	21025.26
1297	17960.11	11063.43	20963.80	1298	17768.70	10945.52	20902.04
1299	17580.69	10829.71	20839.83	1300	17398.60	10717.54	20777.47
1310	15718.41	9682.54	20130.19	1320	14307.60	8813.48	19458.51
1330	13104.32	8072.26	18775.46	1340	12076.26	7438.98	18093.70
1350	11208.62	6904.51	17425.64	1360	10432.23	6426.26	16768.30
1370	9739.88	5999.77	16127.91	1380	9100.72	5606.04	15502.75
1390	8505.97	5239.68	14894.50	1400	7968.77	4908.76	14310.06
1420	7038.20	4335.53	13214.97	1440	6215.97	3829.04	12201.44
1460	5483.20	3377.65	11267.33	1500	4290.77	2643.11	9643.13

HYDROGRAPH FATTENED AT 3705D

```
**********************************************************************************************
*      INCOMING HYDROGRAPH  PEAK (cfs):   2858.36         VOLUME (acre-ft):    273.02      *
*      HYDROGRAPH ADJUSTMENT FACTOR:         0.94000                                         *
*      ADJUSTED HYDROGRAPH  PEAK (cfs):   2686.86         VOLUME (acre-ft):    256.64      *
*      RUNOFF FACTOR(in):   2.40                                                            *
*      FATTENED HYDROGRAPH  PEAK (cfs):   2686.86         VOLUME (acre-ft):    242.21      *
**********************************************************************************************
```

TIME (min)	PRE-ADJ (cfs)	PRE-FAT (cfs)	FATTENED (cfs)	TIME (min)	PRE-ADJ (cfs)	PRE-FAT (cfs)	FATTENED (cfs)
0	0.00	0.00	0.00	100	3.33	3.13	2.86
200	3.46	3.25	2.61	300	15.57	14.64	13.86
400	31.08	29.22	28.25	500	36.76	34.56	33.33
600	53.56	50.35	48.73	700	66.33	62.35	60.11
800	82.17	77.24	73.95	900	117.09	110.06	104.77
1000	187.55	176.30	166.47	1050	274.67	258.19	243.68
1100	342.73	322.17	298.00	1110	385.49	362.36	335.38
1120	461.77	434.06	404.10	1130	558.16	524.67	491.39
1131	569.20	535.05	501.43	1132	580.80	545.95	511.98
1133	593.92	558.29	523.99	1134	608.76	572.24	537.63
1135	625.22	587.70	552.81	1136	642.31	603.77	568.59
1137	661.89	622.18	586.75	1138	681.83	640.92	605.24
1139	702.23	660.10	624.18	1140	722.24	678.91	642.73
1141	742.79	698.22	661.80	1142	763.25	717.46	680.79
1143	784.43	737.36	700.45	1144	806.81	758.40	721.26
1145	831.97	782.05	744.74	1146	859.12	807.58	770.13
1147	890.01	836.61	799.09	1148	926.34	870.76	833.29
1149	975.81	917.27	880.10	1150	1031.96	970.04	933.34
1151	1089.09	1023.75	987.55	1152	1182.26	1111.33	1076.41
1153	1284.17	1207.12	1173.72	1154	1414.90	1330.01	1298.81

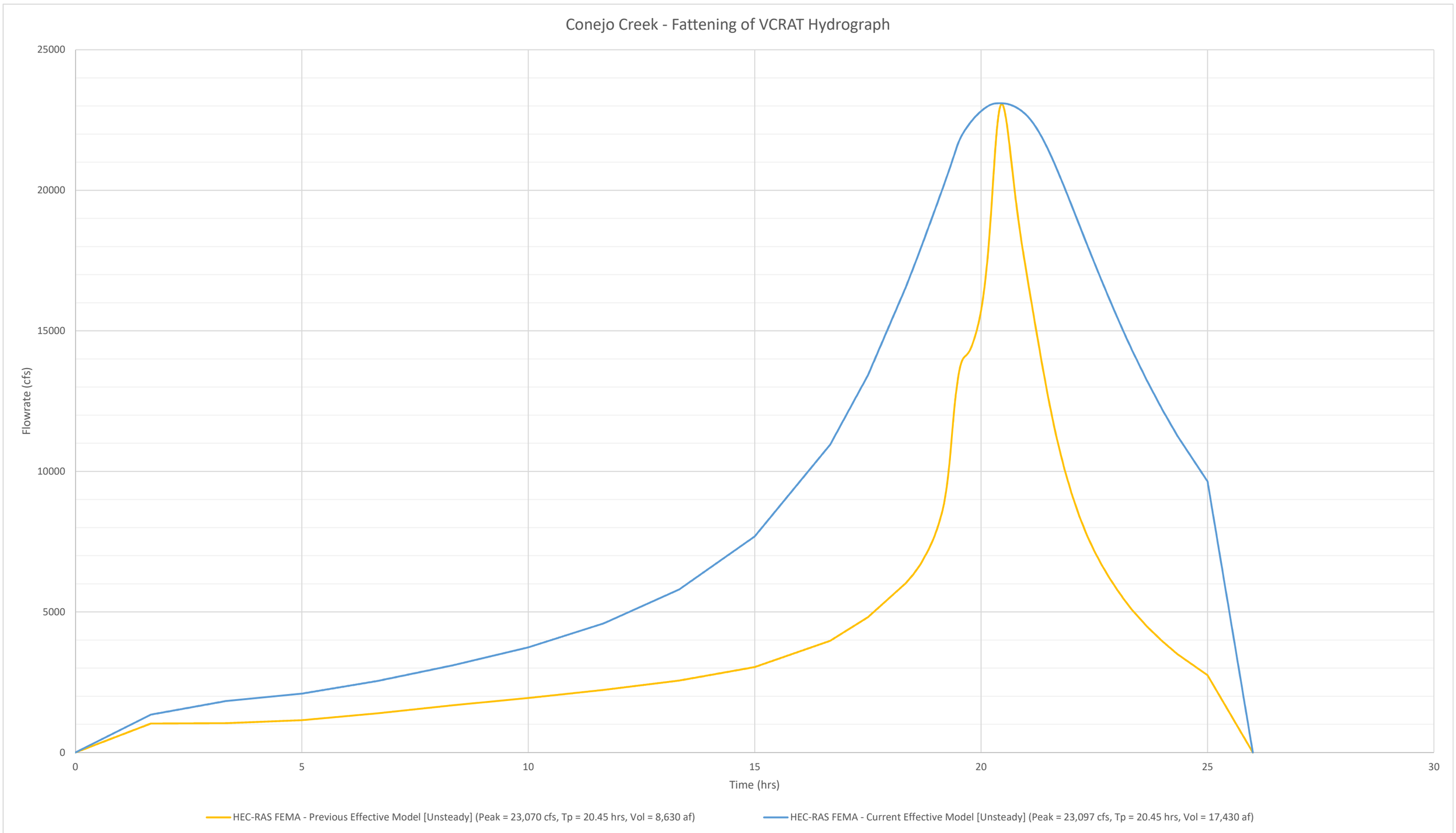
Conejo Creek - Fattening of VCRAT Hydrograph
25000
20000
15000
10000
5000
0
Flowrate (cfs)
0
5
10
15
20
25
30
Time (hrs)
HEC-RAS FEMA - Previous Effective Model [Unsteady] (Peak = 23,070 cfs, Tp = 20.45 hrs, Vol = 8,630 af)
HEC-RAS FEMA - Current Effective Model [Unsteady] (Peak = 23,097 cfs, Tp = 20.45 hrs, Vol = 17,430 af)

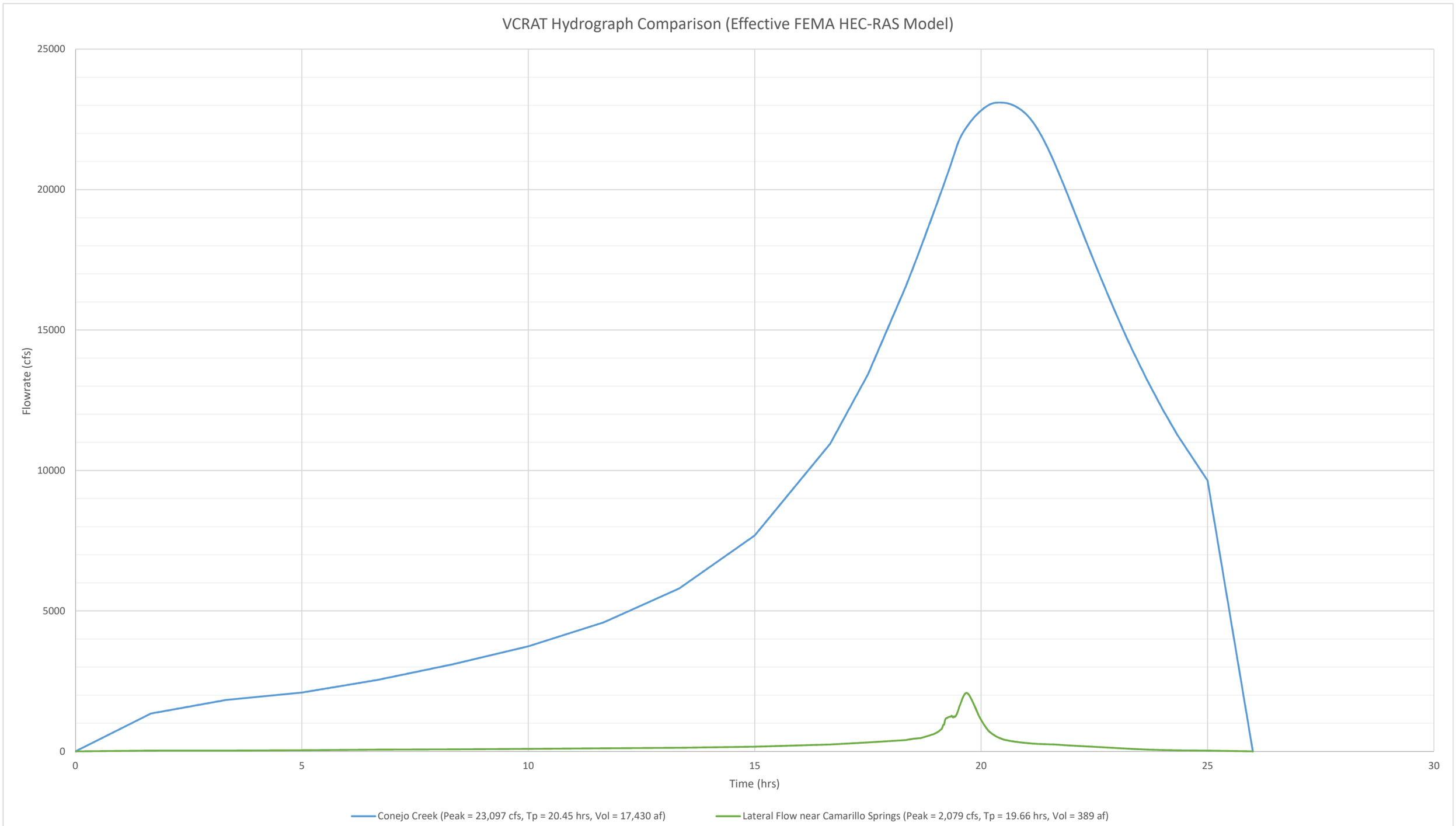
VCRAT Hydrograph Comparison (Effective FEMA HEC-RAS Model)
Flowrate (cfs)
25000
20000
15000
10000
5000
0
0
5
10
15
20
25
30
Time (hrs)
Conejo Creek (Peak = 23,097 cfs, Tp = 20.45 hrs, Vol = 17,430 af)
Lateral Flow near Camarillo Springs (Peak = 2,079 cfs, Tp = 19.66 hrs, Vol = 389 af)



Appendix C

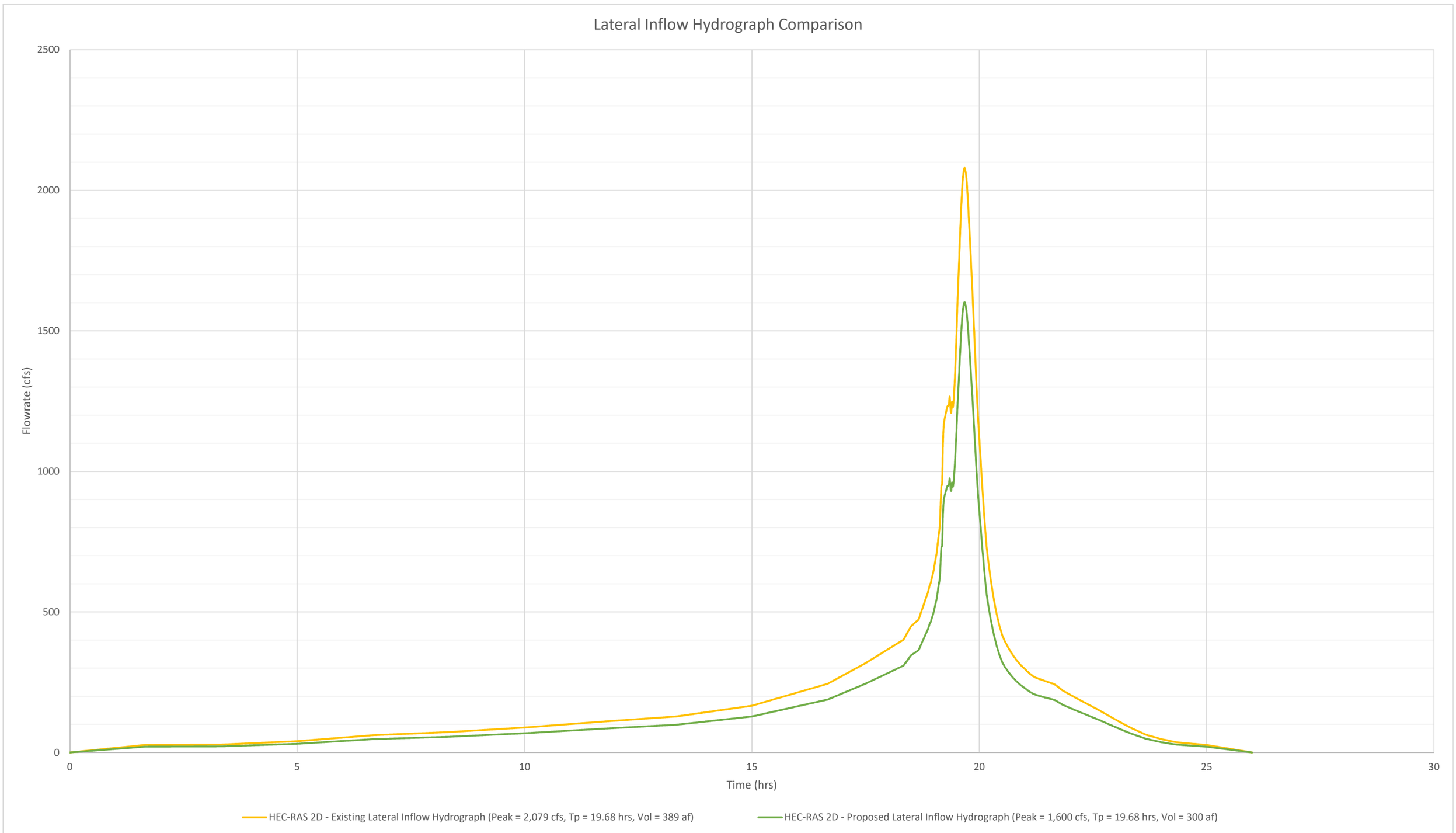
Lateral Inflow Hydrograph Comparison
Flowrate (cfs)
2500
2000
1500
1000
500
0
0
5
10
15
20
25
30
Time (hrs)
HEC-RAS 2D - Existing Lateral Inflow Hydrograph (Peak = 2,079 cfs, Tp = 19.68 hrs, Vol = 389 af)
HEC-RAS 2D - Proposed Lateral Inflow Hydrograph (Peak = 1,600 cfs, Tp = 19.68 hrs, Vol = 300 af)

Watershed A - Upper Camarillo	
Time(min)	Flow(cfs)
0	0
100	11.12
200	15.98
300	17.8
400	20.29
500	23.82
600	29.89
700	41.26
800	56.15
900	85.3
1000	170.04
1050	269.66
1100	435.54
1110	500.94
1120	601.13
1130	681.63
1131	687.47
1132	693.41
1133	698.72
1134	703.75
1135	708.53
1136	713.18
1137	717.74
1138	722.23
1139	726.66
1140	731.02
1141	735.36
1142	739.94
1143	744.93
1144	750.24
1145	756.01
1146	763.04
1147	771.82
1148	781.99
1149	794.01
1150	811.42
1151	836.48
1152	868.78
1153	910.01
1154	961.85
1155	1019.44

Watershed A - Upper Camarillo (continued)	
Time(min)	Flow(cfs)
1156	1073.25
1157	1116.43
1158	1143.62
1159	1151.09
1160	1140.96
1161	1118.56
1162	1087.89
1163	1052.02
1164	1014.53
1165	978
1166	943.76
1167	913.62
1168	886.69
1169	863.05
1170	841.06
1171	820.23
1172	800.41
1173	780.98
1174	761.55
1175	742.22
1176	723.48
1177	705.05
1178	687.59
1179	671.21
1180	655.52
1181	640.91
1182	627.61
1183	615.63
1184	605.07
1185	595.2
1186	585.53
1187	576.08
1188	566.75
1189	557.67
1190	548.93
1191	540.76
1192	532.6
1193	524.44
1194	516.4
1195	508.57
1196	501.03

Watershed A - Upper Camarillo (continued)	
Time(min)	Flow(cfs)
1197	493.76
1198	486.65
1199	479.6
1200	472.56
1201	465.57
1202	458.65
1203	451.94
1204	445.53
1205	439.71
1206	433.87
1207	428.08
1208	422.38
1209	416.83
1210	411.47
1211	406.32
1212	401.37
1213	396.63
1214	392.09
1215	387.72
1216	383.48
1217	379.37
1218	375.38
1219	371.51
1220	367.73
1221	364.05
1222	360.49
1223	357.04
1224	353.69
1225	350.43
1226	347.29
1227	344.2
1228	341.12
1229	338.05
1230	334.96
1231	331.83
1232	328.62
1233	325.32
1234	321.92
1235	318.45
1236	314.97
1237	311.6

Watershed A - Upper Camarillo (continued)	
Time(min)	Flow(cfs)
1238	308.26
1239	304.83
1240	301.36
1241	297.86
1242	294.34
1243	290.83
1244	287.37
1245	283.96
1246	280.63
1247	277.38
1248	274.23
1249	271.18
1250	268.21
1251	265.34
1252	262.54
1253	259.82
1254	257.17
1255	254.59
1256	252.06
1257	249.6
1258	247.19
1259	244.84
1260	242.53
1261	240.29
1262	238.11
1263	236
1264	233.98
1265	232.01
1266	230.07
1267	228.17
1268	226.3
1269	224.47
1270	222.66
1271	220.89
1272	219.16
1273	217.46
1274	215.77
1275	214.12
1276	212.49
1277	210.9
1278	209.33

Watershed A - Upper Camarillo (continued)	
Time(min)	Flow(cfs)
1279	207.78
1280	206.26
1281	204.76
1282	203.29
1283	201.85
1284	200.42
1285	199.01
1286	197.63
1287	196.26
1288	194.9
1289	193.56
1290	192.24
1291	190.93
1292	189.64
1293	188.36
1294	187.1
1295	185.85
1296	184.62
1297	183.4
1298	182.2
1299	181.01
1300	179.81
1310	167.81
1320	156.43
1330	146.36
1340	137.64
1350	130.05
1360	123.26
1370	117.03
1380	111.32
1390	106.1
1400	101.31
1420	92.71
1440	85.34
1460	78.95
1500	68.5

Watershed B - South Adjacent Lower Camarillo	
Time(min)	Flow(cfs)
0	0.00
100	13.32
200	13.72
300	13.90
400	14.10
500	14.40
600	15.37
700	17.62
800	18.89
900	22.88
1000	33.89
1050	46.23
1100	66.35
1110	84.61
1120	87.59
1130	92.34
1131	92.83
1132	93.31
1133	93.81
1134	94.33
1135	94.85
1136	95.42
1137	96.02
1138	96.64
1139	97.27
1140	97.92
1141	100.11
1142	102.30
1143	103.99
1144	106.18
1145	112.81
1146	118.61
1147	123.65
1148	128.88
1149	153.47
1150	174.93
1151	194.38
1152	213.66
1153	232.18
1154	222.80
1155	199.70

Watershed B - South Adjacent Lower Camarillo (continued)	
Time(min)	Flow(cfs)
1156	174.93
1157	149.58
1158	124.27
1159	108.30
1160	103.86
1161	102.40
1162	101.69
1163	101.51
1164	100.83
1165	96.10
1166	91.90
1167	87.68
1168	83.19
1169	78.68
1170	76.47
1171	76.05
1172	74.89
1173	74.23
1174	73.62
1175	73.00
1176	72.39
1177	70.48
1178	69.13
1179	66.96
1180	64.79
1181	63.16
1182	61.81
1183	61.53
1184	60.72
1185	60.73
1186	59.95
1187	59.18
1188	58.95
1189	57.09
1190	55.24
1191	53.93
1192	52.36
1193	50.49
1194	49.18
1195	49.30
1196	48.59

Watershed B - South Adjacent Lower Camarillo (continued)	
Time(min)	Flow(cfs)
1197	47.87
1198	47.45
1199	47.01
1200	46.90
1201	46.20
1202	45.81
1203	45.43
1204	45.61
1205	44.94
1206	44.29
1207	43.93
1208	44.15
1209	43.49
1210	42.87
1211	42.53
1212	42.77
1213	42.16
1214	41.54
1215	41.22
1216	41.50
1217	40.90
1218	40.31
1219	40.01
1220	40.31
1221	39.73
1222	39.14
1223	38.87
1224	39.18
1225	36.85
1226	34.50
1227	33.59
1228	32.61
1229	31.51
1230	30.94
1231	30.68
1232	30.32
1233	30.18
1234	29.94
1235	29.84
1236	29.46
1237	29.23

Watershed B - South Adjacent Lower Camarillo (continued)	
Time(min)	Flow(cfs)
1238	29.14
1239	28.77
1240	28.44
1241	28.33
1242	28.11
1243	27.81
1244	27.70
1245	27.49
1246	27.18
1247	27.09
1248	26.90
1249	26.58
1250	26.51
1251	26.30
1252	26.27
1253	25.93
1254	25.76
1255	25.72
1256	25.39
1257	25.12
1258	25.05
1259	24.88
1260	24.61
1261	24.55
1262	24.39
1263	24.11
1264	24.07
1265	23.91
1266	23.90
1267	23.60
1268	23.45
1269	23.45
1270	23.15
1271	22.89
1272	22.88
1273	22.72
1274	22.48
1275	22.44
1276	22.31
1277	22.07
1278	22.04

Watershed B - South Adjacent Lower Camarillo (continued)	
Time(min)	Flow(cfs)
1279	21.91
1280	21.93
1281	21.65
1282	21.52
1283	21.56
1284	21.27
1285	21.04
1286	21.03
1287	20.92
1288	20.69
1289	20.68
1290	20.56
1291	20.35
1292	20.33
1293	20.22
1294	20.01
1295	20.01
1296	19.90
1297	19.43
1298	18.92
1299	18.55
1300	18.10
1310	16.69
1320	15.69
1330	14.90
1340	14.18
1350	13.69
1360	12.96
1370	12.42
1380	11.92
1390	11.62
1400	11.05
1420	10.32
1440	9.77
1460	6.17
1500	5.27

Watershed C - East Adjacent Lower Camarillo	
Time(min)	Flow(cfs)
0	0.00
100	5.93
200	5.98
300	6.00
400	6.03
500	6.07
600	6.78
700	9.36
800	10.44
900	12.61
1000	20.00
1050	26.79
1100	39.24
1110	46.08
1120	61.05
1130	76.27
1131	77.33
1132	78.30
1133	79.20
1134	80.04
1135	80.78
1136	81.39
1137	81.87
1138	82.26
1139	82.56
1140	82.81
1141	83.00
1142	83.16
1143	83.28
1144	83.40
1145	83.56
1146	83.83
1147	84.20
1148	84.73
1149	85.67
1150	87.19
1151	89.29
1152	92.37
1153	97.51
1154	105.32
1155	116.26

Watershed C - East Adjacent Lower Camarillo (continued)	
Time(min)	Flow(cfs)
1156	131.13
1157	149.34
1158	168.62
1159	187.14
1160	203.61
1161	216.56
1162	222.46
1163	220.12
1164	211.19
1165	197.89
1166	182.25
1167	166.01
1168	150.77
1169	137.30
1170	125.91
1171	116.31
1172	108.12
1173	100.94
1174	94.52
1175	88.83
1176	83.55
1177	78.67
1178	74.04
1179	69.79
1180	66.07
1181	62.78
1182	59.88
1183	57.32
1184	55.06
1185	53.03
1186	51.27
1187	49.64
1188	48.11
1189	46.63
1190	45.19
1191	43.77
1192	42.43
1193	41.28
1194	40.24
1195	39.28
1196	38.41

Watershed C - East Adjacent Lower Camarillo (continued)	
Time(min)	Flow(cfs)
1197	37.61
1198	36.86
1199	36.09
1200	35.30
1201	34.48
1202	33.63
1203	32.74
1204	31.83
1205	30.94
1206	30.13
1207	29.42
1208	28.74
1209	28.12
1210	27.56
1211	27.06
1212	26.61
1213	26.20
1214	25.86
1215	25.56
1216	25.30
1217	25.06
1218	24.85
1219	24.68
1220	24.52
1221	24.37
1222	24.25
1223	24.14
1224	24.04
1225	23.94
1226	23.86
1227	23.79
1228	23.72
1229	23.65
1230	23.58
1231	23.51
1232	23.40
1233	23.27
1234	23.11
1235	22.91
1236	22.64
1237	22.29

Watershed C - East Adjacent Lower Camarillo (continued)	
Time(min)	Flow(cfs)
1238	21.86
1239	21.36
1240	20.78
1241	20.16
1242	19.51
1243	18.87
1244	18.25
1245	17.66
1246	17.11
1247	16.61
1248	16.15
1249	15.74
1250	15.36
1251	15.06
1252	14.78
1253	14.53
1254	14.29
1255	14.08
1256	13.89
1257	13.71
1258	13.56
1259	13.41
1260	13.29
1261	13.17
1262	13.07
1263	12.98
1264	12.89
1265	12.82
1266	12.76
1267	12.70
1268	12.65
1269	12.60
1270	12.54
1271	12.50
1272	12.45
1273	12.41
1274	12.37
1275	12.34
1276	12.30
1277	12.27
1278	12.24

Watershed C - East Adjacent Lower Camarillo (continued)	
Time(min)	Flow(cfs)
1279	12.22
1280	12.20
1281	12.18
1282	12.16
1283	12.13
1284	12.11
1285	12.08
1286	12.06
1287	12.04
1288	12.01
1289	11.99
1290	11.97
1291	11.95
1292	11.93
1293	11.92
1294	11.90
1295	11.89
1296	11.88
1297	11.86
1298	11.84
1299	11.82
1300	11.80
1310	11.29
1320	10.12
1330	8.71
1340	7.78
1350	7.43
1360	7.31
1370	7.24
1380	7.16
1390	7.08
1400	7.03
1420	6.93
1440	6.82
1460	6.73
1500	6.60

DEBRIS CALCULATION CAMARILLO SPRINGS

- FOLLOWS SCOTT & WILLIAMS (USGS) 1978

EVALUATE EACH OF THE FACTORS USED IN THE DEBRIS PRODUCTION EQUATION.

A WATERSHED AREA

$$A = (822\ Ac) \times \left(\frac{1\ mi^2}{640\ Ac}\right) = 1.284\ mi^2$$

ER ELONGATION RATIO

FIND DIAMETER, D, OF CIRCLE WITH AREA A

$$\frac{\pi D^2}{4} = A \Rightarrow D = \sqrt{\frac{4A}{\pi}}$$

$$D = \sqrt{\frac{4 \times 822\ Ac \times (43560\ Ft^2/Ac)}{\pi}} = 6,752.0\ Ft$$

NOTE, L = LONGEST WATERCOURSE = 11,973.4 Ft

$$ER = \frac{D}{L} = \frac{6,752.0\ Ft}{11,973.4\ Ft} = 0.5639$$

DEBRIS CALCULATIONS (CONT)

FF FIRE FACTOR

FIRE FACTOR IS AN AD HOC PARAMETER.

TWO CONFIGURATIONS ARE ANALYZED.

EXISTING CONDITIONS - ASSUMES NO BURN IN WHICH FF = 1.

PARTIALLY BURNED CONDITIONS - ASSUMES VALUE IN SCOTT & WILLIAMS PAPER TO REFLECT STATISTICAL WORST CASE CONDITIONS FF = 20.

SF SLOPE FAILURES

SLOPE FAILURES IS THE AREA OF SLOPE FAILURES, IN ACRES, PER WATERSHED AREA IN SQUARE MILES.

THE AREA OF SLOPE FAILURES WAS MEASURED ON A GIS MAP LAYER FROM THE CALIFORNIA DEPARTMENT OF CONSERVATION. THERE IS NO SLOPE FAILURE ON THE WATERSHED SO SF = 1.

DEBRIS CALCULATION (CONT)

K PRECIPITATION FACTOR

$$K = (P_{24\,HOUR}) \times (P_{10\,DAY})^2$$

RAINFALL AMOUNTS ARE FROM NOAA ATLAS '14 DATA FOR CAMARILLO SPRINGS WATERSHED LOCATION.

$P_{24\,HOUR} = 6.52\,IN$

$P_{10\,DAY} = 14.6\,IN$

$K = (6.52)(14.6)^2 = 1,389.8$

DEBRIS CALCULATION (CONT)

CALCULATE THE DEBRIS PRODUCED

$$\text{LOG}(S_y) = 1.244 + 0.828\,\text{LOG}(A) + 1.382\,\text{LOG}(ER) + 0.375\,\text{LOG}(SF) + 0.251\,\text{LOG}(FF) + 0.840\,\text{LOG}(K)$$

EXISTING CONDITION - NO BURN

$$\text{LOG}(S_y) = 1.244 + 0.828\,\text{LOG}(1.284) + 1.382\,\text{LOG}(.5639) + 0.375\,\text{LOG}(1) + 0.251\,\text{LOG}(1) + 0.840\,\text{LOG}(1389.8)$$

$$\Rightarrow S_y = 4,268.2\ cy = \underline{2.6\ \text{AC-FT}}$$

STASTICALLY BURNED CONDITION

$$\text{LOG}(S_y) = 1.244 + 0.828\,\text{LOG}(1.284) + 1.382\,\text{LOG}(.5639) + 0.375\,\text{LOG}(1) + 0.251\,\text{LOG}(20) + 0.840\,\text{LOG}(1389.8)$$

$$\Rightarrow S_y = 9050.9\ cy = \underline{5.6\ \text{AC-FT}}$$



Appendix D

	Alternative	E. Basin WSE	W. Basin WSE	Lake Peak WSE	Excess Lake Volume at Peak WSE (af)	Volume from Overflow (af)	Q_RCB or Pipes (cfs)	Q_Cart Path (cfs)	Q_Over Road (cfs)	Total Peak Q (cfs)
Existing	10'x7' Cart Path	128.8	-	117.5	-131	265	-	811	326	1137
Proposed Alternatives	8'x6' RCB (48 sq ft)	128.5	127.2	114.51	10.6	52	376	581	188	1145
	10'x6' RCB (60 sq ft)	128.2	126.9	113.6	-9.2	33	489	561	55	1105
	12'x6' RCB (72 sq ft)	127.8	126.7	112.9	-21.2	21	596	492	0	1088
	3x5' Pipe (60 sq ft)	128.3	127	113.8	-5.7	37	463	570	83	1116
	4x5' Pipe (80 sq ft)	127.8	126.7	112.9	-21.2	21	596	493	0	1089
	10'x6' RCB w/ Lower Loss Coef's (.2/.44/n=.013)	127.5	126.8	113.1	-17.7	24	556	548	0	1104



Appendix E

PROPOSED EAST OF CAMARILLO SPRINGS ROAD - EAST STORAGE TABLE		
ELEVATION	AREA (AC)	PROPOSED VOLUME (AF)
128	1.60	13
125	1.17	9
120	0.76	4
115	0.37	1
110	0.16	0

*SEDIMENT/DEBRIS STORAGE UP TO EL. 119

CAMARILLO SPRINGS GOLF COURSE

PROPOSED BY PASS CULVERT
(10'x 6' RCB)

EXISTING LOW FLOW
CHANNEL TO REMAIN

PROPOSED LOW FLOW
PIPE 18" DIA.

PROPOSED WEIR CREST
EL. = 125.0 (L=75')
TO OVER FLOW
LAKE STORAGE AREA

PROPOSED Q_{100} MAXIMUM
FLOOD LEVEL @ EL. = 127.0

EXISTING GOLF CART
TUNNEL TO REMAIN
(10'x 7')

PROPOSED INLET
EL. = 119.0
(10'x 6' RCB)

PROPOSED Q_{100} MAXIMUM
FLOOD LEVEL @ EL. = 128.0

EXISTING GOLF
TO REMAIN

CAMARILLO SPRINGS ROAD

PROPOSED SEDIMENT
STORAGE TO EL. = 119.0

EXISTING GOLF
TO REMAIN

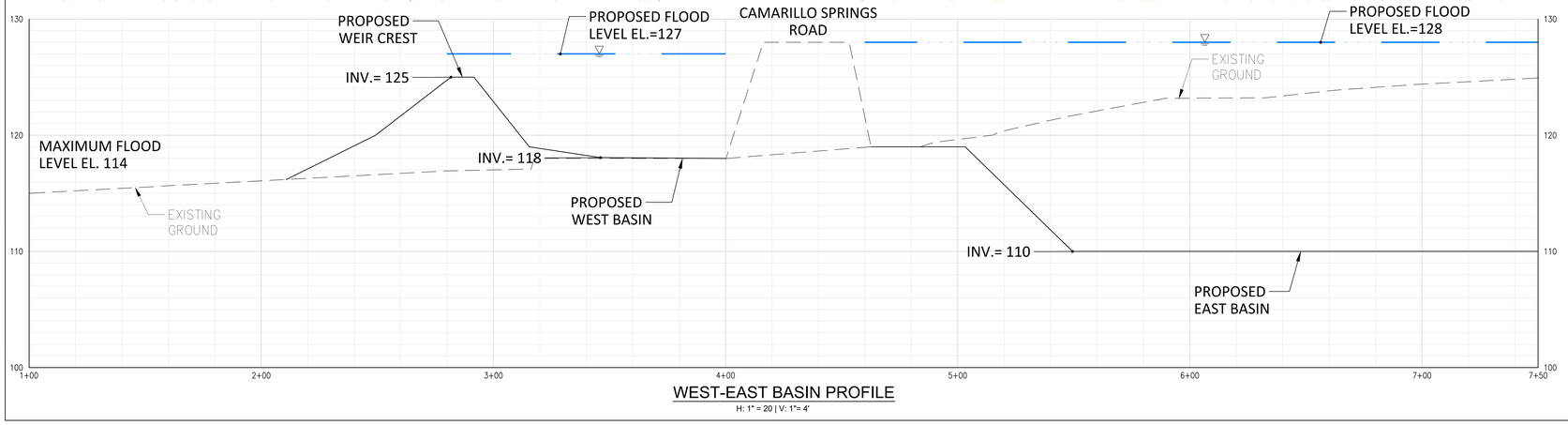

WEST-EAST BASIN PROFILE
H: 1" = 20 | V: 1"= 4'

LEGEND

- PROPOSED MAJOR CONTOUR
- PROPOSED MINOR CONTOUR
- EXISTING MAJOR CONTOUR
- EXISTING MINOR CONTOUR
- MAXIMUM FLOOD LEVEL

NORTH

20 10 0 20 40

J.N. : B306 | October, 2018

PACE
Advanced Water Engineering
17520 Newhope Street, Suite 200 | Fountain Valley, CA 92708
P: (714) 481-7300 | www.pacewater.com

FIGURE B

APPENDIX V – APPROVED POST CONSTRUCTION STORMWATER MANAGEMENT PLAN

NO COMMENTS
3/20/2019
MS

VENTURA COUNTYWIDE STORMWATER QUALITY PROGRAM
POST-CONSTRUCTION STORMWATER MANAGEMENT PLAN (PCSMP)
FOR
Camarillo Springs (SW #0034)
PARCEL #: 234-004-0-59 (SW #0034)

Project Name: Camarillo Springs (SW #0034)

Preparation/Revision Date: 3/5/2019

Prepared for:

Name of Owner/Developer:	NUWI
Stress Address:	1733 Ocean Ave, Suite #350
City, State, Zip Code:	Santa Monica, CA 90401
Telephone:	310-394-3379

Prepared by:

Name and Title of Preparer:	Don Jensen / Kinsey Hensley
Company Name:	Jensen Design and Survey
Stress Address:	1672 Donlon Ave
City, State, Zip Code:	Ventura, CA 93003
Telephone:	805-633-2200

I hereby certify that the information provided in this Application is correct.

Application Prepared by: Kinsey Hensley, Jensen Design & Survey
Print Name and Firm

Signed
Signature of Project Engineer in the Firm Named Above

Title

Affix Professional registration stamp of the person named above with signature and expiration date



Project Name: Camarillo Springs (SW #0034)

STEP 1: DETERMINE PROJECT APPLICABILITY

Instructions:
For new development projects, answer yes, no, or NA to questions (1) - (10) below.
For redevelopment projects, answer yes, no, or NA to questions (11) - (13) below.

NEW DEVELOPMENT PROJECTS	
Does the new development project fall within categories (1) - (10) below?	
Project Type and/or Characteristics	**Y/N/NA**
1) Development projects equal to 1 acre or greater of disturbed area that adds more than 10,000 square feet of impervious surface area **→go to Step 2**	Y
2) Industrial parks with 10,000 square feet or more of total altered surface area **→go to Step 2**	N/A
3) Commercial strip malls with 10,000 square feet or more of impervious surface area **→go to Step 2**	N/A
4) Retail gasoline outlets with 5,000 square feet or more of total altered surface area **→go to Step 2**	N/A
5) Restaurants (Standard Industrial Classification (SIC) of 5812) with 5,000 square feet or more of total altered surface area **→go to Step 2**	N/A
6) Parking lots with 5,000 square feet or more of impervious surface area, or with 25 or more parking spaces **→go to Step 2**	N/A
7) Streets, roads, highways, and freeway construction of 10,000 square feet or more of impervious surface area **→ go to Roadway Projects**	N
8) Automotive service facilities (Standard Industrial Classification (SIC) of 5013, 5014, 5511, 5541, 7532-7534 and 7536-7539) of 5,000 square feet or more of total altered surface area **→go to Step 2**	N
9) Projects located in or directly adjacent to, or discharging directly to an Environmentally Sensitive Area (ESA), where the development will: a. Discharge stormwater runoff that is likely to impact a sensitive biological species or habitat; and b. Create 2,500 square feet or more of impervious surface area **→go to Step 2**	N
10) Single-family hillside homes (see Section 2 of the TGM for specific requirements) **→go to SF Hillside**	N

Project Name: Camarillo Springs (SW #0034)

PROJECT APPLICABILITY, CONT.

REDEVELOPMENT PROJECTS	
For redevelopment projects that fall within categories (1) through (9) above, and that conduct land-disturbing activities that result in the creation, or addition, or replacement of 5,000 square feet or more of impervious surface area on an already developed site, answer questions 11-13 below. Existing single-family dwelling and accessory structures are exempt from redevelopment projects unless such projects create, add, or replace 10,000 square feet of impervious surface area.	
Project Type and/or Characteristics	**Y/N/NA**
11) Projects where redevelopment results in an alteration to more than fifty percent of impervious surfaces of a previously existing development, and the existing development was not subject to the post development stormwater quality control requirements of Board Order 00-108, these projects must mitigate the entire redevelopment project area **→go to Step 2**	
12) Projects where redevelopment results in an alteration to more than fifty percent of impervious surfaces of a previously existing development, and the existing development was subject to the post development stormwater quality control requirements of Board Order 00-108, the project must mitigate only the altered portion of the redevelopment project area and not the entire project area **→go to Step 2**	
13) Projects where redevelopment results in an alteration of less than fifty percent of impervious surfaces of a previously existing development these projects must mitigate only the altered portion of the redevelopment project area and not the entire project area **→go to Step 2**	

Project Name: Camarillo Springs (SW #0034)

STEP 2: ASSESS SITE CONDITIONS

Provide an assessment of the project site using the following tables

New Development Project General Characteristics

General Project Characteristics	Area (acres)
Total Project Site Area	182.00
Total Disturbed Area	182.00
Total Existing (Pre-Project) Impervious Area	6.37
Post-Project Impervious Area [1]	32.57
Area of Green Roof (ET-1) [1]	0.00
Area Draining to Hydrologic Source Controls (ET-2) [1]	0.00
Revised Post-Project Impervious Area	32.57
Project Imperviousness (%)	17.90%

Redevelopment Project General Characteristics

General Project Characteristics	Area (acres)
Total Project Site Area	
Total Altered Area [6]	
Total Existing (Pre-Project) Impervious Area	
Was existing (pre-project) impervious area subject to post-development stormwater quality control requirements? [2]	
Amount of Existing Impervious Area Altered [3]	
Amount of Impervious Area Added	
% Alteration of Existing Impervious Area [4]	N/A
Post-Project Impervious Area (Impervious Area to be Mitigated) [1], [4]	0.00
Area of Green Roof (ET-1) [1]	
Area Draining to Hydrologic Source Controls (ET-2) [1]	
Revised Post-Project Impervious Area	0.00
Project Imperviousness (%) [5]	

Project Name: Camarillo Springs (SW #0034)

Project Description

Briefly describe project:
The project is a 182 acre residential and golf course development. There will be a pond to include storage for stormwater as a detention basin. The housing will include 1/8 acre lots and high density apartments. The development will include housing, neighborhood parks, walking trails, open space, and a pond. The residential component of the development is 35 acres, while the remaining acreage will be an active golf course.
Describe current and proposed zoning and land use designation:
The current site is a golf course.
Describe topography of project area. Identify low and high points and the location of steep slopes (provide a range of grades):
The topography is relatively flat. It is the valley that is surrounded by mountains. The project area is currently mapped as a flood hazard.
Describe the site's soil types (A, B, C, D) and geological conditions
The soil has a mixture of soil types B, C, and D with shallow ground water. *Attach soil type information*

Project Name: Camarillo Springs (SW #0034)

Project Description, cont'd

Describe the site's groundwater conditions (e.g. depth to seasonal high groundwater):
The site has high groundwater which makes infiltration options not feasible. Refer to Geolabs infeasiblity analysis dated October 19, 2018

Is there offsite drainage on the site? If so, identify the location(s) and source(s) of offsite drainage and the volume of water running onto the site:
The water coming onto the site will either go into the proposed pond or into an 8'x6' box culvert which conveys the water out of the site. The 8'x6' box and overall flood control is being designed by PACE Engineering. Flows from tributary areas in the mountain ranges surrounding the project will drain toward the 8'x6' box culvert that discharges into Conejo Creek. If the box becomes inundated flows are diverted to an onsite pond for additional storage. The flood waters will not come onto the surface of the project as the pads are elevated above the high water elevation
Describe any existing utilities within the project area that would limit the possible locations of certain BMPs:
There are no known existing utilities limiting BMPs.
Describe any environmentally sensitive areas (e.g. riparian areas, wetlands) within the project area:
There are no environmentally sensitive areas within the project area.

Geotechnical considerations:	
Does the site contain any of the following characteristics:	**Y/N/NA**
Collapsible Soil	N
Expansion Soil	Y
Potential for seismically-inducted soil liquefaction	N
Additional considerations:	
The groundwater within the project area is high and does not allow for significant infiltration.	
Attach relevant geotechnical information	

Project Name: Camarillo Springs (SW #0034)

STEP 2: POLLUTANTS OF CONCERN

Pollutants of Concern (See Section 3.3 of TGM)

Activity / Potential Land Uses	Potential Pollutant*								
	Sediment	Nutrients	Metals	Pesticides	Oxygen Demanding Substances	Toxic Organics	Oil & Grease	Bacteria	Trash and Debris
Home Subdivisions	X	X			X			X	X
Parking Lots	X		X		X	X			X
Residential Use	X		X				X		
Other [fill in if necessary]									

*Denote potential pollutant with "x"

Receiving Waterbody Listings (see Section 3.3. of TGM)

Receiving Waterbody (watershed indicated in parentheses)	**Constituent Group [7]**	**Distance to Project (ft)**
Calleguas Creek watershed above Potrero Rd (Calleguas Creek)	Bacteria, Salts, Trash, Metals, Nutrients, Pesticides, PCBs, Sediment	1000.00

[1] Applicant should enter post-project impervious cover prior to accounting for green roof and hydrologic source control (HSC) credits. Volume reduction provided by green roofs and HSCs are accounted for implicitly in the sizing calcuations for BMPs by assuming the roof area covered by a green roof or the area draining to a HSC is pervious rather than impervious when caluclating the runoff coefficient for the site. Green roofs and HSCs are not required to be considered for all project locations and types. In order to obtain credit, Green Roofs and HSCs must be designed as specified in the TGM. Additional detail on Green Roofs (ET-1) and HSCs (ET-2) can be found in Section 6 of the TGM.

[2] Land-disturbing activity that results in the creation or addition or replacement of less than 5,000 square feet of impervious surface area on an already developed site, or that results in a decrease in impervious area which was subject to the post development stormwater quality control requirements of Board Order 00-108, is not subject to mitigation unless so directed by the local permitting agency

[3] Redevelopment does not include routine maintenance activities that are conducted to maintain the original line and grade, hydraulic capacity, or original purpose of the facility or emergency redevelopment activity required to protect public health and safety. Impervious surface replacement, such as the reconstruction of parking lots and roadways, that does not disturb additional area and maintains the original grade and alignment, is considered a routine maintenance activity. Agencies' flood control, drainage, and wet utilities projects that maintain original line and grade or hydraulic capacity are considered routine maintenance. Redevelopment also does not include the repaving of existing roads to maintain original line and grade.

[4] "% Alteration of Existing Impervious Area" determines the 50% threshold which is key in determining portion of site that must comply with post-construction requirements - see Step 1 redevelopment categories for more detail. The amount of "Post Project Impervious Area" that must adhere to post-construction requirements is dependant on 50% threshold

[5] "Project Imperviousness" is calculated using the "Total Project Area" except when redevelopment projects that must mitigate only the altered portion of the redevelopment project area. In this case, the "Total Disturbed Area" is used to calculate "Project Imperviousness"

[6] For the purposes of this calculation, Total Altered Area shall mean any area that is altered as a result of land disturbance, such as clearing, grading, grubbing, and excavation. This excludes areas used exclusively for temporary stockpiling.

[7] If a waterbody is listed for "toxicity" and the cause and/or contribution to toxicity is known, then the consituent group known to contribute to toxicity are listed here (in lieu of listing "toxicity")

Project Name: Camarillo Springs (SW #0034)

STEP 3: APPLY SITE DESIGN PRINCIPLES AND TECHNIQUES

Provide a brief description of site design principles and techniques included within the proposed project site.

Site Design Measures [1]	Included? Y/N/NA	Brief Description of the Site Design Measure
Site Planning	Y	The site was planned to include housing, a pond, and a portion of the golf course at the earliest stages of design. The pond is necessary for storage as a detention basin and for flood control.
Protect and Restore Natural Areas	Y	146 acres of the 182 acre project area will remain as golf course use and protected natural areas. The groundwater is high and there is no applicable place for infiltration.
Minimize Land Disturbance	N	The area of development was minimized through site design.
Minimize Impervious Cover	Y	The site will have a retention pond and a portion of the golf course will remain open.
Apply LID at Various Scales	Y	The site will incorporate catch basin inserts and low irrigation landscaping.
Implement Integrated Water Resource Management Practices	Y	Low flow irrigation and plumbing will be used for the development.

[1] Refer to Section 4.2 - 4.7 of the TGM for applicable Design Criteria.

Project Name: Camarillo Springs (SW #0034)

STEP 4: APPLY SOURCE CONTROL MEASURES

Provide a brief description of the source control measures included in the proposed project site.

Site-Specific Source Control Measures[1]	Included? Y/N/NA	Brief Description of the Source Control Measure
S-1: Storm Drain Message and Signage	Y	There will be strom drain signage for all curb inlets.
S-2: Outdoor Material Storage Area Design	N	There are no outdoor material storage areas proposed in the development.
S-3: Outdoor Trash Storage and Waste Handling Area Design	Y	Trash enclosures will be included for golf clubhouse. The trash enclosures will have an impervious base and a cover. Grading for the trash enclosure areas will not have water drain through the area.
S-4: Outdoor Loading/Unloading Dock Area Design	Y	There is one loading area for the golf clubhouse. The loading area will be covered 3 feet beyond the loading dock and graded to not allow stormwater from surrounding areas to run-on. There will be no storm drain connections.
S-5: Outdoor Repair/Maintenance Bay Design	N	There are no outdoor repair/maintenance bay areas.
S-6: Outdoor Vehicle /Equipment/ Accessory Washing Area Design	Y	There is one vehicle washing area for the golf clubhouse. The wash area will be covered and not allow water in or out of the washing area. The water from washing will have a drain that connects to the sewer.
S-7: Fueling Area Design	N	There are no fueling areas.
S-8: Proof of Control Measure Maintenance	Y	Maintenance of the swale and contech treatment will be written into the HOA agreement and the HOA will be responsible for the maintence of the treatment facilities.

[1] Refer to Fact Sheets in Section 5 of the TGM for detailed information and design criteria

Project Name: Camarillo Springs (SW #0034)

STEP 5: APPLY BMPS TO REDUCE EIA TO <=5%

New development and redevelopment projects (Categories 1-6, 8, and 9) must reduce EIA to <=5%

Step 5a: Calculate Allowable EIA

EIA is defined as impervious area that is hydrologically connected via sheet flow over a hardened conveyance or impervious surface without any intervening medium to mitigate flow volume.

The allowable "EIA" for a project is calculated as:

$$EIA_{allowable} = (A_{project})*(\%_{allowable}) \quad \text{Equation 2-1}$$

Where:

$EIA_{allowable}$ = The maximum impervious area from which runoff can be treated and discharged offsite (and not retained onsite) [acres]

$A_{project}$ = The total project area [acres] [1]

$\%_{allowable}$ = 5 percent

Input:		Units
$A_{project}$ [1]	182.00	Acres
$\%_{allowable}$	5.00%	Percent
$EIA_{allowable}$	**9.10**	Acres

Step 5b: Calculate Impervious Area to be Retained

The impervious area from which runoff must be retained onsite is the total impervious area minus the EIA allowable, which should be calculated as follows:

$$A_{retain} = TIA - EIA_{allowable} = (IMP*A_{project}) - EIA_{allowable} \quad \text{Equation 2-2}$$

Where:

A_{retain} = the drainage area from which runoff must be retained [acres]

TIA = total impervious area [acres]

IMP = imperviousness of project area (%)

Input:		Units
Imperviousness	17.90%	
$A_{project}$ [1]	182.00	Acres
$EIA_{allowable}$	9.10	Acres
A_{retain}	**23.47**	Acres

BMPS TO REDUCE EIA TO <=5%, CONT.

Step 5c: Calculate the Volume to be Retained (SQDV)

The runoff volume that is to be retained onsite should be calculated using Equation 2-3 below:

$$V_{retain} = C*(0.75/12)*A_{retain}$$ Equation 2-3

Where:

V_{retain} = The stormwater quality design volume (SQDV) that must be retained onsite [ac-ft]

C = runoff coefficient (equals 0.95 for impervious surfaces)

Input:		Units
C	0.95	
A_{retain}	23.47	Acres
V_{retain}	1.394	ac-ft
	454,086.9	gallons
	60,702.2	cu.ft.

Continue to Step 5d

Project Name: Camarillo Springs (SW #0034)

STEP 5d: SELECT RETENTION BMPs

Select and size Retention BMPs to meet the 5% EIA Requirement. Retention BMPs include INF1-6, RWH-1, and ET 1 and 2. See TGM, Section 6 for more information.

Retention BMPs	Included? Y/N	Drainage Area Retained (acres) [2]	Drainage Area Runoff Coefficient	Volume Retained (SQDV) (ac-ft) [1],[2]	If not applicable, state brief reason
Infiltration BMPs					
INF-1: Infiltration Basin	N		0.95		
INF-2: Infiltration Trench	N		0.95		
INF-3: Bioretention	N		0.95		
INF-4: Drywell	N		0.95		
INF-5: Permeable Pavement	N		0.95		
INF-6: Proprietary Infiltration	N		0.95		
INF-7: Bioinfiltration	N		0.95		
Rainwater Harvesting BMPs					
RWH-1: Rainwater Harvesting	N		2		
			TOTAL Volume Retained	0.000	ac-ft
				0.0	gallons
				0.0	cu.ft.
			REMAINING Volume to meet 5% EIA requirement	1.4	ac-ft
				454,087	gallons
				60,702	cu.ft.

[1] SQDV Methodology #3 used here.

[2] If a Retention BMP is used more than once on a site (i.e., 2 Infiltration Trenches implemented on one site) then drainage area and volume retained shown here should be additive. A separate BMP sizing worksheet (see Appendix E of the TGM) should be submitted for each BMP.

ADDITIONAL INSTRUCTIONS: Retention BMPs must be used onsite to the maximum extent practicable. If the remaining volume to meet 5% EIA cannot be met, then project applicants must demonstrate technical infeasibilty. Consult Section 3.2 of the 2011 TGM for infeasability criteria. A technical infeasability site-specific analysis must be submitted. Projects that cannot prove technical infeasibility must reduce EIA to <=5% using Retention BMPs.

If onsite Retention BMPs cannot feasibly be used to meet the 5% EIA Requirement, move onto Step 5e; if 5%EIA Requirement is met go to Step 7

	Y/N/NA
A completed copy of the applicable "BMP Sizing Worksheet(s)" for the project's Retention BMPs from Appendix E of the TGM is included as an attachment. BMPs must be sized to meet the SQDV or SQDF (See Section 2 Step 7 of the TGM).	N/A

Project Name: Camarillo Springs (SW #0034)

STEP 5e: SELECT AND SIZE BIOFILTRATION BMPS TO REDUCE EIA TO <=5%

New development and redevelopment projects that demonstrate technical infeasibility (see Section 3.2 of TGM) for reducing EIA to <= 5% using Retention BMPs are eligible to use Biofiltration BMPs to achieve the 5% EIA Requirement.

	Y/N
Is it technically infeasible for Retention BMPs to meet the 5% EIA Requirement?	Y
If yes, volume-based biofiltration BMPs shall be sized to treat 1.5 times the volume not retained using Retention BMPs.	

ADDITIONAL INSTRUCTIONS: Submit Technical Infeasabillity documentation.

The onsite biofiltered volume ($V_{biofilter}$), should be calculated as follows:

$$V_{biofilter} = (V_{retain} - V_{achieved}) * 1.5 \qquad \text{Equation 2-4}$$

Where:

$V_{biofilter}$ = the volume that must be captured and treated in a Biofiltration BMP [ac-ft]

V_{retain} = the stormwater quality design volume (SQDV) that must be retained [ac-ft]

$V_{achieved}$ = the volume retained onsite using Retention BMPs [ac-ft]

Input		Units
$V_{achieved}$	0.000	ac-ft
V_{retain}	1.394	ac-ft
$V_{biofilter}$	**2.09**	ac-ft
	681,130	gallons
	91,053	cu.ft.

BIOFILTRATION BMPs, CONT.

Biofiltration BMPs	Included? Y/N	Drainage Area Biofiltered (acres) [3]	Drainage Area Runoff Coefficient	Volume Biofiltered (1.5xSQDV) (ac-ft) [2],[3]	If not applicable, state brief reason
BIO-1: Bioretention with Underdrain	N		0.95		High groundwater
BIO-2: Planter Box	N		0.95		site configuration not condusive
BIO-3: Vegetated Swale [1]	Y	16.19	0.95	1.442	(includes area 1 and 3)
BIO-4: Vegetated Filter Strip [1]	N		0.95		site configuration not condusive
BIO-5: Proprietary Biotreatment [1]	Y	19.62	0.95	1.747	(area 2 on drainage map)
			TOTAL Volume Biofiltered	3.19	ac-ft
				1,039,253.4	gallons
				138,927.1	cu.ft
			REMAINING Volume to be addressed by Alternative Compliance	0.00	ac-ft
				0.0	gallons
				0.0	cu.ft

[1] BIO-3 and BIO-4 are flow-based and should be calculated using SQDF for sizing (see Table 2-1 of the TGM for the applicable design criteria for sizing). The SQDV is shown here for 5% EIA Requirement compliance purposes only.

[2] SQDV Methodology #3 used here.

[3] If a Biofiltration BMP is used more than once on a site (e.g., 2 Planter Boxes implemented on one site) then drainage area and volume biofiltered shown here be additive. A separate BMP sizing worksheet (see Appendix E of the TGM) should be submitted for each BMP.

If onsite Retention BMPs and/or Biofiltration BMPs cannot feasibly be used to meet the 5% EIA standard, move onto Step 6, otherwise, skip Step 6.

	Y/N/NA
A completed a copy of the applicable "BMP Sizing Worksheet(s)" for the project's Biofiltration BMPs from Appendix E of the TGM is included as an attachment.. BMPs must be sized to meet the 1.5 times SQDV or SQDF (see Section 2, Step 7 of the TGM) requirement. Guidance on flow based design for 150% sizing provided in Table 2-1 of the TGM.	Y

Project Name: Camarillo Springs (SW #0034)

STEP 7: APPLY TREATMENT CONTRL MEASURES

► *Stormwater runoff from EIA and developed pervious surfaces must be mitigated using Retention BMPs, Biofiltration BMPs, or Treatment Control Measures (See Chapter 6 of TGM).*
► *Treatment Control Measures should be selected per the BMP selection process outlined in Section 3.3 of the TGM.*
► *BMPs must be sized to meet the SQDV or SQDF. See Section 2, Step 7 of the for guidance on calculating the SQDV and SQDF.*

	Y/N
Completed copy of the applicable "BMP Sizing Worksheet(s)" for the project's stormwater BMP(s) from Appendix E of the Technical Guidance Manual is included.	Y

Project Name: Camarillo Springs (SW #0034)

ADDITIONAL REQUIRED SUBMITTALS

Submit $2,000 fee deposit, and 1 original & 1 copy of PCSMP as well as two electronic copies on 2 CD's with the Excel spreadsheet along with the following submittals to City of Camarillo Public Works Dept.:

Yes	**Site map** that includes: o Property boundary o Major roadways or landmarks o Scale and north arrow o Drainage areas o Surrounding land uses o Presence of Environmentally Sensitive Areas o Open space preservation areas o Impervious areas o Natural hydrologic features o Location of discharge(s) o Existing and planned utilities o Topography (including steep slopes) o Key activities such as outdoor material storage, parking, food preparation, etc. o Potential pollutant areas (e.g., fueling island) o Location of nearby (within 2,000 ft of development project) bus or train station(s) o Location and type of source control measures o Location and type of stormwater BMPs
Yes	**BMP Sizing Worksheet(s) (see Appendix E of TGM); design specifiations and details must also be provided for Green Roofs and Hydrologic Source Controls (ET-1 & 2)**
Yes	Stormwater Treatment Device Access and Maintenance Agreement (Use City of Camarillo Template available at www.cityofcamarillo.org in forms)
Yes	Maintenance Plan (Use City of Camarillo Template available for download at www.cityofcamarillo.org in "forms")
X	Technical Infeasibility Analysis – if Retention BMPs cannot be used, the applicant must submit a site-specific analysis showing technical infeasibility as described in Section 3.2 of the TGM. Technical infeasibility may include some (or all) of the components submitted with soil, groundwater and/or geotechnical reports. Technical infeasibility must also account for Rainwater Harvesting. Rainwater Harvesting is not required to be used if the available demands do not meet the volume required for 80% capture using a 72-hour drawndown time (See RWH-1 in Section 6 of the TGM for more detail).
Yes	**Soil Type Information** (may include site specific analyses, available geologic or geotechnical reports and/ or the Ventura Hydrology Manual Soil Map zoomed into site level)
Yes	**Groundwater Information** (may include available groundwater data, site specific redoximorphic analytical/groundwater monitoring results, or known groundwater impacts such as contaminated sites registered with the State Water Board)
Yes	**Geotechnical Reports** (may include site specific analyses with information on collapsible soils, expansive soil, liquefaction, or groundwater mounding analysis)
	Rainwater Harvesting - Include calculations and justification for rainwater harvesting demand. Section 3.2 for guidance of the TGM.

Project Name: Camarillo Springs
Job No: DEV03.5541
Date: 3/5/2019
Drainage Area Name: Area 1-Swale

Step 1: Determine Water Quality Design Flow				
1-1	Enter Project Area (Acres), $A_{project}$	$A_{project}$=	11.97	ac
1-2	Enter impervious fraction, IMP	IMP =	0.8	
1-3	Determine pervious runoff coefficient using Table E-1, C_p	C_p =	0.15	
1-4	Calculate runoff coefficient $C=0.95*IMP + C_p(1-IMP)$	C =	0.79	
1-5	Enter design rainfall intensity (in/hr), i	i =	0.35	in/hr
1-6	Calculate water quality design flow (cfs), SQDF - CiA	SQDF =	3.309705	cfs

Project Name: Camarillo Springs
Job No: DEV03.5541
Date: 2/13/2019
Drainage Area Name: Area 1-Swale

Step 2: Calculate Swale Bottom Width				
2-1	Enter Water Quality Design Flow (cfs), SQDF	SQDF=	3.309705	cfs
2-2	Enter Manning's roughness coefficient for shallow flow conditions, n_{wq} = 0.2	n_{wq} =	0.2	
2-3	Calculate design flow depth (ft), y = (SQDF*nwq / 1.49*b*s^0.5)^1.49	y =	0.330	ft
2-4	Enter longitudinal slope (ft/ft) (along direction of flow, S	S =	0.025	ft/ft
2-5	Enter/Calculate bottom width of swale (ft), b=(SQDF*n_{wq})/(1.49*y^1.67*S^0.5)	b=	16	ft
2-6	If B is between 2 and 10 feet go to to Step 3			
2-7	If B is les than 2 feet, assume B = 2 ft and recalculate flow depth			
2-8	If b is greater than 10 ft, one of the following design adjustments must be made (and recalculate as necessary): 1. Increase the longitudinal slope to a maximum of 0.06 ft/ft 2. Increase the design flow depth to a maximum of 4 in 3. Place a divider lengthwise along the swale bottom (Figure 3-1) at least three-quarters of the swale length (beginning at the inlet). Swales width can be increased to an absolute maximum of 16 feet if a divider is provided.			

Step 3: Determine design flow velocity				
3-1	Enter side slope length per unit height (H:V), Z	Z=	4	
3-2	Enter bottom width of swale (ft), b	b=	16.000	ft
3-3	Enter design flow depth (ft), y	y=	0.330	ft
3-4	Calculate the cross-sectional area of flow at design depth (sf), $A_{wq} = b*y + Z*y^2$	A_{wq}=	5.716	sf
3-5	Calculate design flow velocity (ft/sec), $V_{wq} = SQDF/A_{wq}$	Vwq =	0.6	ft/sec
3-6	If the design flow exceeds 1 ft/sec, go back to step 2 and change one or more of the design parameters to reduce the design flow velocity. If design flow velocity is less than 1 ft/sec, proceed to step 4			
Step 4: Calculate Swale Length				
4-1	Enter hydraulic residence time (min 7 min), t_{hr}	t_{hr} =	7.0	min
4-2	Calculate swale length, $L = 60*t_{hr}*V_{wq}$	L=	243.2	ft
4-3	If L is too long for the site, proceed to Step 5 to adjust the swale layout. If L is greater than 100 ft and will fit within the constraints of the site, skip to Step 6 If L is less than 100 ft, increase the length to a minimum of 100 ft, leaving the bottom width unchanged, and skip to Step 6			

Length provided for project area is 750 LF, there will be a divider within the swale

Step 5: Adjust swale layout to fit within site constraints				
5-1	Enter the bottom width calculated in Step 2 (ft), $b_i = b$	b_i=	16	ft
5-2	Enter design flow depth (ft), y	y =	0.330	ft
5-3	Enter the swale side slope ratio (H:V), Z	Z =	4	
5-4	Enter the additional top width above the side slope for the design water depth (ft), b_{slope} $= 2*Z*y$	b_{slope}=	2.64	ft
5-5	Enter the initial length calculated in Step 4, $L_i = L$	L_i=	243.2	ft
5-6	Calculate the top area of the design treatment depth (sf), $A_{top} = (b_i + b_{slope})*L_i$	Atop=	4533.4	sf
5-7	Choose a reduced swale length based on site constraints (ft), L_f	L_f=	0	ft
5-8	Calculate the increased bottom width (ft), $b_f = (A_{top}/L_f) - b_{slope}$	b_f=	#DIV/0!	ft
5-9	Recalculate the cross sectional area of flow at design depth (sf), $A_{wq,f} = b_f*y + Z*y^2$	$A_{wq,f}$=	#DIV/0!	sf
5-10	Recalculate design flow velocity (ft/sec) $V_{wq} = SQDF/A_{wq,f}$	Vwq =	#DIV/0!	ft/sec
5-11	Recalculate the hydraulic residance time (min), $t_{hr} = Lf/(60*V_{wq})$	thr =	#DIV/0!	min
5-12	When Vwq and thr are recalculated to meet requirements, proceed to Step 6			
Step 6: Provide Conveyance Capacity for Flows Higher than SQDF				
6-1	The swale will be offline such that all flows greater than SQDF will be bypassed.			

Project Name: Camarillo Springs
Job No: DEV03.5541
Date: 2/13/2019
Drainage Area Name: Area 2-Contech

Step 1: Determine Water Quality Design Flow				
1-1	Enter Project Area (Acres), $A_{project}$	$A_{project}$=	19.62	ac
1-2	Enter impervious fraction, IMP	IMP =	0.8	
1-3	Determine pervious runoff coefficient using Table E-1, C_p	C_p =	0.1	
1-4	Calculate runoff coefficient $C=0.95*IMP + C_p(1-IMP)$	C =	0.78	
1-5	Enter design rainfall intensity (in/hr), i	i =	0.33	in/hr
1-6	Calculate water quality design flow (cfs), SQDF - CiA	SQDF =	5.050188	cfs

Contech CDS Unit Model #CDS404-8-C will treat the diverted low flows

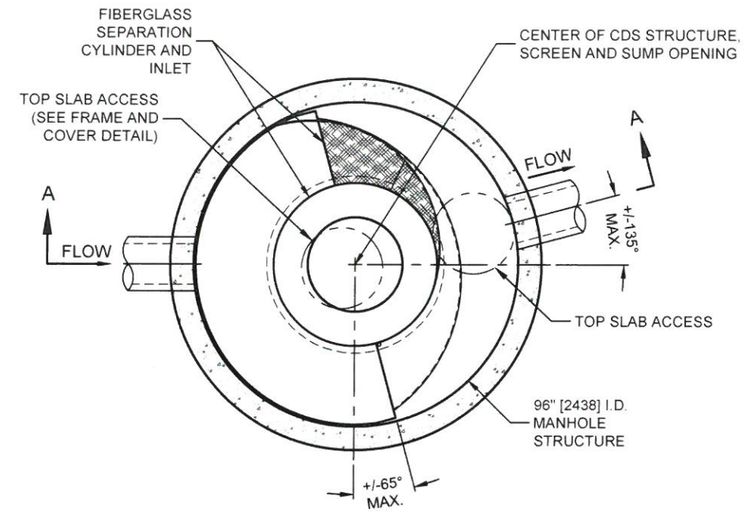

PLAN VIEW B-B
N.T.S.

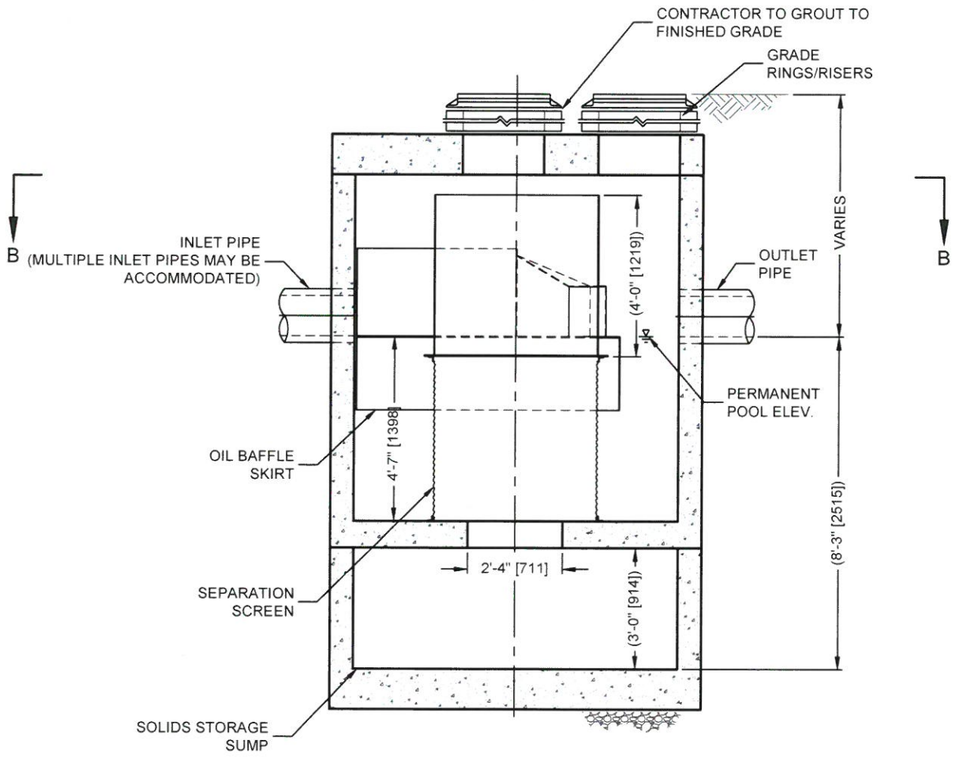

ELEVATION A-A
N.T.S.

CDS4040-8-C DESIGN NOTES

CDS4040-8-C RATED TREATMENT CAPACITY IS 6.0 CFS [169.9 L/s], OR PER LOCAL REGULATIONS. MAXIMUM HYDRAULIC INTERNAL BYPASS CAPACITY IS 30.0 CFS [850 L/s]. IF THE SITE CONDITIONS EXCEED 30.0 CFS [850 L/s], AN UPSTREAM BYPASS STRUCTURE IS REQUIRED.

THE STANDARD CDS4040-8-C CONFIGURATION IS SHOWN. ALTERNATE CONFIGURATIONS ARE AVAILABLE AND ARE LISTED BELOW. SOME CONFIGURATIONS MAY BE COMBINED TO SUIT SITE REQUIREMENTS.

CONFIGURATION DESCRIPTION
GRATED INLET ONLY (NO INLET PIPE)
GRATED INLET WITH INLET PIPE OR PIPES
CURB INLET ONLY (NO INLET PIPE)
CURB INLET WITH INLET PIPE OR PIPES
SEPARATE OIL BAFFLE (SINGLE INLET PIPE REQUIRED FOR THIS CONFIGURATION)
SEDIMENT WEIR FOR NJDEP / NJCAT CONFORMING UNITS

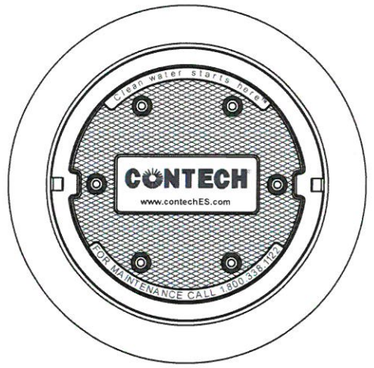

FRAME AND COVER
(DIAMETER VARIES)
N.T.S.

SITE SPECIFIC DATA REQUIREMENTS

STRUCTURE ID			
WATER QUALITY FLOW RATE (CFS OR L/s)			5.05
PEAK FLOW RATE (CFS OR L/s)			OFFLINE
RETURN PERIOD OF PEAK FLOW (YRS)			OFFLINE
SCREEN APERTURE (2400 OR 4700)			4700
PIPE DATA:	I.E.	MATERIAL	DIAMETER
INLET PIPE 1	*	*	*
INLET PIPE 2	*	*	*
OUTLET PIPE	*	*	*
RIM ELEVATION			*
ANTI-FLOTATION BALLAST		WIDTH	HEIGHT
		*	*

NOTES/SPECIAL REQUIREMENTS:

* PER ENGINEER OF RECORD

GENERAL NOTES
1. CONTECH TO PROVIDE ALL MATERIALS UNLESS NOTED OTHERWISE.
2. DIMENSIONS MARKED WITH ( ) ARE REFERENCE DIMENSIONS. ACTUAL DIMENSIONS MAY VARY.
3. FOR FABRICATION DRAWINGS WITH DETAILED STRUCTURE DIMENSIONS AND WEIGHTS, PLEASE CONTACT YOUR CONTECH ENGINEERED SOLUTIONS LLC REPRESENTATIVE. www.contechES.com
4. CDS WATER QUALITY STRUCTURE SHALL BE IN ACCORDANCE WITH ALL DESIGN DATA AND INFORMATION CONTAINED IN THIS DRAWING.
5. STRUCTURE SHALL MEET AASHTO HS20 AND CASTINGS SHALL MEET HS20 (AASHTO M 306) LOAD RATING, ASSUMING GROUNDWATER ELEVATION AT, OR BELOW, THE OUTLET PIPE INVERT ELEVATION. ENGINEER OF RECORD TO CONFIRM ACTUAL GROUNDWATER ELEVATION.
6. PVC HYDRAULIC SHEAR PLATE IS PLACED ON SHELF AT BOTTOM OF SCREEN CYLINDER. REMOVE AND REPLACE AS NECESSARY DURING MAINTENANCE CLEANING.

INSTALLATION NOTES
A. ANY SUB-BASE, BACKFILL DEPTH, AND/OR ANTI-FLOTATION PROVISIONS ARE SITE-SPECIFIC DESIGN CONSIDERATIONS AND SHALL BE SPECIFIED BY ENGINEER OF RECORD.
B. CONTRACTOR TO PROVIDE EQUIPMENT WITH SUFFICIENT LIFTING AND REACH CAPACITY TO LIFT AND SET THE CDS MANHOLE STRUCTURE (LIFTING CLUTCHES PROVIDED).
C. CONTRACTOR TO ADD JOINT SEALANT BETWEEN ALL STRUCTURE SECTIONS, AND ASSEMBLE STRUCTURE.
D. CONTRACTOR TO PROVIDE, INSTALL, AND GROUT PIPES. MATCH PIPE INVERTS WITH ELEVATIONS SHOWN.
E. CONTRACTOR TO TAKE APPROPRIATE MEASURES TO ASSURE UNIT IS WATER TIGHT, HOLDING WATER TO FLOWLINE INVERT MINIMUM. IT IS SUGGESTED THAT ALL JOINTS BELOW PIPE INVERTS ARE GROUTED.

THIS PRODUCT MAY BE PROTECTED BY ONE OR MORE OF THE FOLLOWING U.S. PATENTS: 5,788,848; 6,641,720; 6,511,595; 6,561,733 RELATED FOREIGN PATENTS OR OTHER PATENTS PENDING

CONTECH ENGINEERED SOLUTIONS LLC
www.contechES.com
9025 Centre Pointe Dr., Suite 400, West Chester, OH 45069
800-338-1122 513-645-7000 513-645-7993 FAX

CDS4040-8-C
OFFLINE CDS
CAMARILLO SPRINGS
614161-010

I:\AD.CONTECH-CPI.COM\ROOT\MERLIN\PROJECTACTIVE\614100\614161\614161-10-CDS\DRAWINGS\PROPOSAL\614161-010-CDS4040-DETAIL.DWG 3/5/2019 11:37 AM

Project Name: Camarillo Springs
Job No: DEV03.5541
Date: 3/5/2019
Drainage Area Name: Area 3-Swale

Step 1: Determine Water Quality Design Flow				
1-1	Enter Project Area (Acres), $A_{project}$	$A_{project}$=	4.22	ac
1-2	Enter impervious fraction, IMP	IMP =	0.8	
1-3	Determine pervious runoff coefficient using Table E-1, C_p	C_p =	0.15	
1-4	Calculate runoff coefficient $C=0.95*IMP + C_p(1-IMP)$	C =	0.79	
1-5	Enter design rainfall intensity (in/hr), i	i =	0.35	in/hr
1-6	Calculate water quality design flow (cfs), SQDF - CiA	SQDF =	1.16683	cfs

Project Name: Camarillo Springs
Job No: DEV03.5541
Date: 2/13/2019
Drainage Area Name: Area 3-Swale

Step 2: Calculate Swale Bottom Width				
2-1	Enter Water Quality Design Flow (cfs), SQDF	SQDF=	1.16683	cfs
2-2	Enter Manning's roughness coefficient for shallow flow conditions, n_{wq} = 0.2	n_{wq} =	0.2	
2-3	Calculate design flow depth (ft), y = (SQDF*nwq / 1.49*b*s^0.5)^1.49	y =	0.330	ft
2-4	Enter longitudinal slope (ft/ft) (along direction of flow, S	S =	0.02	ft/ft
2-5	Enter/Calculate bottom width of swale (ft), b=(SQDF*n_{wq})/(1.49*y^1.67*S^0.5)	b=	6	ft
2-6	If B is between 2 and 10 feet go to to Step 3			
2-7	If B is les than 2 feet, assume B = 2 ft and recalculate flow depth			
2-8	If b is greater than 10 ft, one of the following design adjustments must be made (and recalculate as necessary): 1. Increase the longitudinal slope to a maximum of 0.06 ft/ft 2. Increase the design flow depth to a maximum of 4 in 3. Place a divider lengthwise along the swale bottom (Figure 3-1) at least three-quarters of the swale length (beginning at the inlet). Swales width can be increased to an absolute maximum of 16 feet if a divider is provided.			

Step 3: Determine design flow velocity				
3-1	Enter side slope length per unit height (H:V), Z	Z=	4	
3-2	Enter bottom width of swale (ft), b	b=	6.000	ft
3-3	Enter design flow depth (ft), y	y=	0.330	ft
3-4	Calculate the cross-sectional area of flow at design depth (sf), $A_{wq} = b*y + Z*y^2$	A_{wq}=	2.416	sf
3-5	Calculate design flow velocity (ft/sec), $V_{wq} = SQDF/A_{wq}$	Vwq =	0.5	ft/sec
3-6	If the design flow exceeds 1 ft/sec, go back to step 2 and change one or more of the design parameters to reduce the design flow velocity. If design flow velocity is less than 1 ft/sec, proceed to step 4			
Step 4: Calculate Swale Length				
4-1	Enter hydraulic residence time (min 7 min), t_{hr}	t_{hr} =	7.0	min
4-2	Calculate swale length, $L = 60*t_{hr}*V_{wq}$	L=	202.9	ft
4-3	If L is too long for the site, proceed to Step 5 to adjust the swale layout. If L is greater than 100 ft and will fit within the constraints of the site, skip to Step 6 If L is less than 100 ft, increase the length to a minimum of 100 ft, leaving the bottom width unchanged, and skip to Step 6			

Length provided for project area is 205 LF

Step 5: Adjust swale layout to fit within site constraints				
5-1	Enter the bottom width calculated in Step 2 (ft), $b_i = b$	b_i=	6	ft
5-2	Enter design flow depth (ft), y	y =	0.330	ft
5-3	Enter the swale side slope ratio (H:V), Z	Z =	4	
5-4	Enter the additional top width above the side slope for the design water depth (ft), b_{slope} $= 2*Z*y$	b_{slope}=	2.64	ft
5-5	Enter the initial length calculated in Step 4, $L_i = L$	L_i=	202.9	ft
5-6	Calculate the top area of the design treatment depth (sf), $A_{top} = (b_i + b_{slope})*L_i$	Atop=	1752.9	sf
5-7	Choose a reduced swale length based on site constraints (ft), L_f	L_f=	205	ft
5-8	Calculate the increased bottom width (ft), $b_f = (A_{top}/L_f) - b_{slope}$	b_f=	5.91	ft
5-9	Recalculate the cross sectional area of flow at design depth (sf), $A_{wq,f} = b_f*y + Z*y^2$	$A_{wq,f}$=	2.39	sf
5-10	Recalculate design flow velocity (ft/sec) $V_{wq} = SQDF/A_{wq,f}$	Vwq =	0.489	ft/sec
5-11	Recalculate the hydraulic residance time (min), $t_{hr} = Lf/(60*V_{wq})$	t_{hr} =	6.99	min
5-12	When Vwq and thr are recalculated to meet requirements, proceed to Step 6			
Step 6: Provide Conveyance Capacity for Flows Higher than SQDF				
6-1	The swale is sized to also convey high flows within the swale configuration. See attached flowmaster calculations			

Worksheet for area 3 full flow containment

Project Description

Friction Method	Manning Formula
Solve For	Normal Depth

Input Data

Roughness Coefficient	0.035		
Channel Slope	0.02000	ft/ft	
Left Side Slope	4.00	ft/ft (H:V)	
Right Side Slope	4.00	ft/ft (H:V)	
Bottom Width	6.00	ft	
Discharge	14.00	ft^3/s	Q50 discharge

Results

Normal Depth	0.52	ft	swale is 1' deep
Flow Area	4.23	ft^2	
Wetted Perimeter	10.31	ft	
Hydraulic Radius	0.41	ft	
Top Width	10.18	ft	
Critical Depth	0.49	ft	
Critical Slope	0.02473	ft/ft	
Velocity	3.31	ft/s	
Velocity Head	0.17	ft	
Specific Energy	0.69	ft	
Froude Number	0.91		
Flow Type	Subcritical		

GVF Input Data

Downstream Depth	0.00	ft
Length	0.00	ft
Number Of Steps	0	

GVF Output Data

Upstream Depth	0.00	ft
Profile Description		
Profile Headloss	0.00	ft
Downstream Velocity	Infinity	ft/s
Upstream Velocity	Infinity	ft/s
Normal Depth	0.52	ft
Critical Depth	0.49	ft
Channel Slope	0.02000	ft/ft

Worksheet for area 3 full flow containment

GVF Output Data

Critical Slope	0.02473	ft/ft

ADS FLEXSTORM: CONNECTOR PIPE SCREEN (CPS)

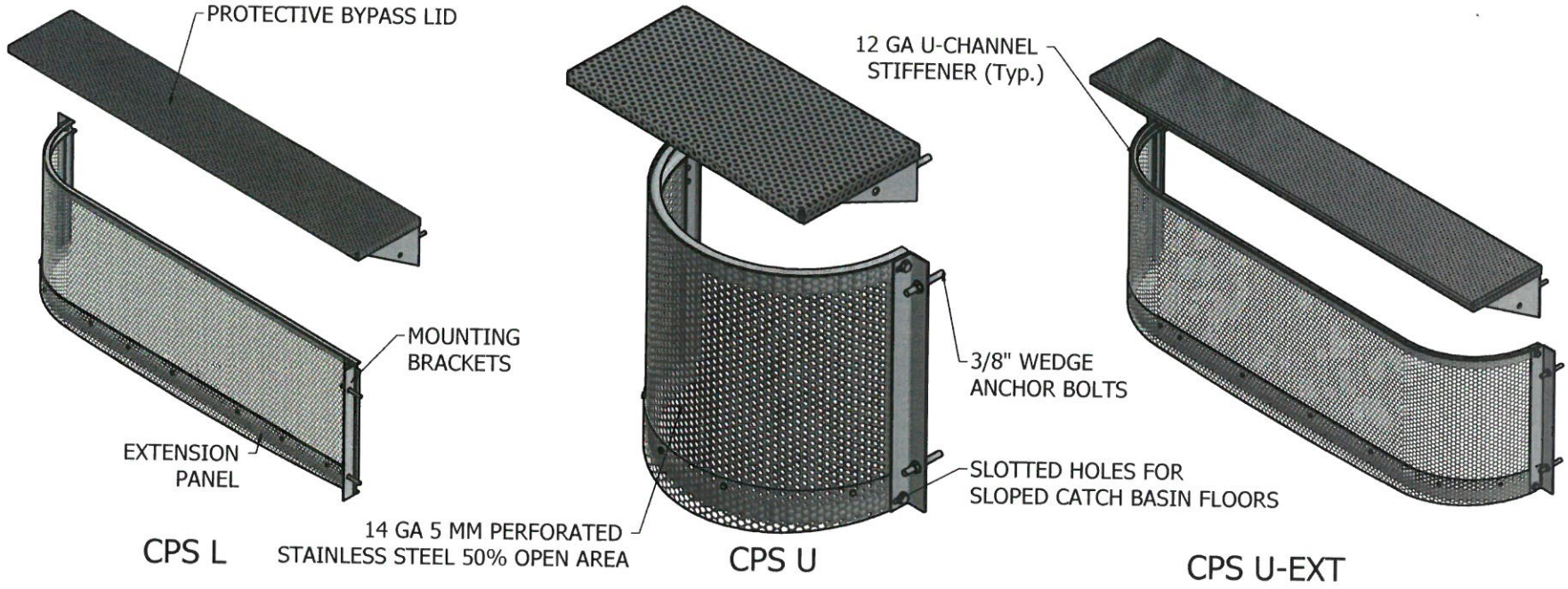

SIZING TABLE						MINIMUM BYPASS RATINGS for lid designs with 6" Freeboard									
CPS Flow Rates by Model $Q_{screen} = cA_{screen}\sqrt{2gh}$						B (bypass height) = 4"		B (bypass height) = 6"		B (bypass height) = 8"		B (bypass height) = 10"		B (bypass height) = 12"	
Model	Screen Length	Screen Height	A_{screen} (Net open area)	Q_{screen} Flow Rate (cfs)	L_{bypass} (ft)	Q4	H_4	Q6	H_6	Q8	H_8	Q10	H_{10}	Q12	H_{12}
3L18H-Bypass-Shape	3	18	1.80	8.72	3.00	3.93	8	5.52	7	6.81	6	7.77	5	13.19	10
4L18H-Bypass-Shape	4	18	2.45	11.84	4.00	5.24	8	7.35	7	9.08	6	10.36	5	17.58	10
5L18H-Bypass-Shape	5	18	3.09	14.96	5.00	6.55	8	9.19	7	11.35	6	12.95	5	21.98	10

Determine CPS model number based on screen length and height - bypass height - and screen shape. For example Model 3L18H-8-U is 3' wide x 18" tall, has 8" bypass height, and is "U" shaped. Custom lengths and heights are available for any catch basin.

*LA County approved

*Full Capture Device as Certified by the California Regional Water Quality Control Board (CRWQCB)

ALL PRODUCTS MANUFACTURED BY INLET & PIPE PROTECTION, INC
A DIVISION OF ADS, INC.
WWW.INLETFILTERS.COM
(866) 287-8655 PH
(630) 355-3477 FX
INFO@INLETFILTERS.COM

THIS PRINT REMAINS SUBJECT MATTER IN WHICH FLEXSTORM HAS PROPRIETARY RIGHTS. THE RECEIPT OF POSSESSION OF THIS PRINT DOES NOT CONFER, TRANSFER OR LICENSE TO USE OR REPRODUCE ANY OF THE INFORMATION SHOWN HEREIN. REPRODUCTION OF THIS PRINT OR ANY OF THE INFORMATION CONTAINED HEREIN OR MANUFACTURE OF ANY ARTICLE SHOWN, FOR THE DISCLOSURE TO OTHERS IS FORBIDDEN, EXCEPT BY WRITTEN PERMISSION FROM FLEXSTORM. ©2013 ADS, INC.

SIZE	FRAME TYPE	DWG NO	REV
C	CPS	Flexstorm CPS	A
SCALE		SHEET 1 OF 1	

Equation 5 $Q_{bypass} = c_{bypass} A_{bypass} \sqrt{2gH}$

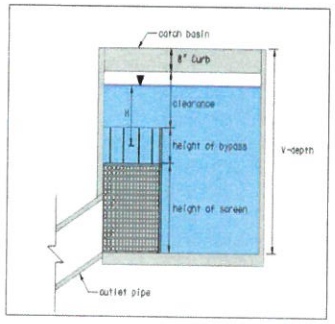

STANDARD LENGTHS, VARIABLE BYPASS HEIGHTS

ADS CPS units are standardized with a pre-set Length of screen (L). The height of the bypass is the variable used to confirm that the total Q_{bypass} for the CPS with Lid design exceeds the Max Q_{10} for a certain CB width. The sizing table below shows the resultant Q_{bypass} for the various B (bypass heights).

Definining the Orifice bypass equation for CPS with deflector lids

$$Q_{bypass} = c_{bypass} A_{bypass} \sqrt{2gH}$$

C_{bypass} = .6 (coefficient)
g= 32.2 ft/s^2
A_{bypass} = L $_{(length\ of\ screen)}$ x h $_{(bypass\ height)}$
H = depth of water to centroid of bypass



CPS U

SIZING TABLE						MINIMUM BYPASS RATINGS for lid designs with 6" Freeboard									
CPS Flow Rates by Model $Q_{screen} = cA_{screen}\sqrt{2gh}$						B (bypass height) = 4"		B (bypass height) = 6"		B (bypass height) = 8"		B (bypass height) = 10"		B (bypass height) = 12"	
Model	Screen Length	Screen Height	A_{screen} (Net open area)	Q_{screen} Flow Rate (cfs)	L_{bypass} (ft)	Q4	H_4	Q6	H_6	Q8	H_8	Q10	H_{10}	Q12	H_{12}
3L18H-Bypass-Shape	3	18	1.80	8.72	3.00	3.93	8	5.52	7	6.81	6	7.77	5	13.19	10
4L18H-Bypass-Shape	4	18	2.45	11.84	4.00	5.24	8	7.35	7	9.08	6	10.36	5	17.58	10
5L18H-Bypass-Shape	5	18	3.09	14.96	5.00	6.55	8	9.19	7	11.35	6	12.95	5	21.98	10

Bypass ratings in Black are for 3.5' Vb Minimum Catch Basin Depths
Bypass ratings in Red are for 4' Vb Minimum Catch Basin Depths

Determine CPS model number based on screen length and height - bypass height - and screen shape. For example Model 3L18H-8-U is 3' wide x 18" tall, has 8" bypass height, and is "U" shaped. Custom lengths and heights are available for any catch basin.

Example Selection and Calculation:

Assume we have a 7' wide catch basin with a depth Vb of 3.5' and 18" connector pipe. The Max Q_1 is 1.2 CFS and the Max Q_{10} is 5.3 CFS per the hydrology study table to the right. Select the appropriate screen to pass the 1 year flow then determine the minimum bypass height required to pass the 10 year flow. The 3L18H-6B screen (highlighted in green) passes 8.52 CFS far exceeding the 1.2 CFS requirement. According to the sizing table that unit will bypass 5.52 CFS with a 6" bypass height based on the Orifice Flow bypass equation which is greater than the required 5.3 CFS maximum 10 yr flow seen by the 7' wide catch basin. The bypass is calculated as follows:

$Q_{bypass} = c_{bypass} A_{bypass} \sqrt{2gH}$
C_{bypass} = .6 (orifice coefficient)
g= 32.2 ft/s^2
A_{bypass} = L $_{(length\ of\ screen)}$ x h $_{(bypass\ height)}$ = (3 x 6/12) = 1.5 ft^2
H = depth of water to centroid of bypass (maintaining 6" freeboard)
We need to check Clearance and determine the H
Clearance = Vdepth-Hscreen-Hbypass-curb height (must always be > 4")
Clearance = 42"-18"-6"-8"=10"
H = Hbypass/2 + Clearance - 6" freeboard (sized conservatively)
H = 6/2 + 10 - 6 = 7" or .583 ft
Finally, $Q_{bypass} = c_{bypass} A_{bypass} \sqrt{2gH}$
Q_{bypass} = .6 x 1.5 $\sqrt{2\ x\ 32.2\ x\ .583}$ = 5.52cfs

Equation 5 $Q_{bypass} = c_{bypass} A_{bypass} \sqrt{2gH}$

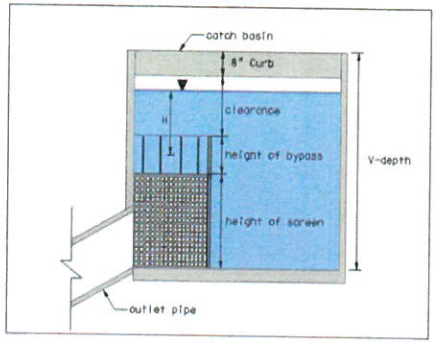

Catch Basin Ratings for one year and ten year rain events as determined by LA County hydrology studies		
CB width (ft)	Max Q_{10} (cfs)	Max Q_{1-1} (cfs)
3.5	2.8	0.6
7	5.3	1.2
10	7.5	1.7
14	10	2.2
21	13.9	3.1
28	17.3	3.8

ADS – FLEXSTORM CONNECTOR PIPE SCREEN (CPS) WORK INSTRUCTIONS

1.0 Product Selection: Installer to determine which CPS Model to install based on 1. Flow Ratings, 2. Bypass Requirements, 3. Location of Connector Pipe inside the catch basin (see Product Selection Guide).

2.0 Materials: All FLEXSTORM CPS are comprised entirely of 304 stainless steel and brought to the field pre-configured for easy assembly once Product Selection is confirmed; All Models are supplied with vertical upright mounting brackets which accept qty (4) 3/8" x 3" minimum stainless anchor bolts. All bypass lids require a qty (2) 3/8" x 3" min stainless anchor bolts. Mounting brackets are equipped with slotted holes to allow for varied contours on walls and sloped floors.

3.0 Installation of Base Model: Drop CPS through the manhole opening. Position the CPS evenly spaced around the connector pipe ensuring a minimum of 4" spacing away from any corners. Loosen the bolts in the slotted holes which connect the screen to the upright mounting brackets until the bottom is flush with the floor. Tighten the bolts and mark the hole locations on the wall for the stainless anchor bolts. Drill holes and hammer the bolts in place and secure the CPS using stainless nuts. If the bottom of the base exposes more than a 5 mm gap then an additional base face strip may be fastened to the base channel using stainless tek screws or rivets. This base face strip matches the length and contour of the primary base.

3.1 Installation of Bypass Lid: If the bypass lid is required verify the minimum bypass height needed and mark the "B" bypass height location on the wall directly above the base uprights. Lift the lid in place and mark the hole locations for the lid mounting brackets. Drill holes and hammer the bolts in place and secure the lid with the stainless nuts.

4.0 Removal of CPS: In certain locations, the CPS may need to be removed in order to provide increased accessibility through the manhole entry. In such cases, the CPS would utilize the "Quick Release" wall mount bracket set and standard CPS flanges. See the installation drawing labeled Removable CPS Detail for step by step instructions. In standard installations, the CPS can be removed by simply loosening the 3/8" anchor nuts that secure it to the wall.

5.0 Warranty: ADS – FLEXSTORM warrants the CPS material to be free of defects and guarantees base framing integrity for a period of 3 years from installation date.

ADS – FLEXSTORM CONNECTOR PIPE SCREEN (CPS) MAINTENANCE GUIDELINES

FLEXSTORM suggests that its Connector Pipe Screens (CPS) be maintained per this modified set of conditions from the LA County CPS Standards. FLEXSTORM advises that catch basins be cleaned out at least 2 times per year and/or if debris has filled above a 40% level inside of the catch basin. Sites with large amounts of foliage, high sediment loads, or smaller CPS devices might need to be cleaned more frequently.

Maintenance Conditions and Maintenance Standards: The Following are deficiencies in maintenance conditions and their corresponding maintenance standards which shall apply to the Connector Pipe Screen. The cleanout of each CB shall meet the maintenance standards listed as follows:

	Description of Maintenance Actions
1	Clear trash and debris located immediately in front of curb opening or side opening of CB, and on top or between metal grates of grated CB.
2	Remove Vegetation growing across and/or blocking the basin opening.
3	Remove all Trash and debris and vegetation from inside the Catch Basin.
4	Remove Trash and debris in the connector pipe opening, upstream or downstream.
5	Knock off/Remove all Debris that covers the perforated openings of the connector pipe screen
6	Ensure there is no Standing Water inside of catch basin (indicates the device is not properly draining)

Trash and debris shall include, but is not limited to, mud, vegetation, and garbage.

Upon completion of a cleanout operation at a CB and before leaving it, the Contractor shall sweep the top surface of the CB and the area 2 feet around the CB, and shall remove any trash and debris resulting from the cleanout operations. No debris is to be left at a CB for future pick-up.

Method of Removal: All trash and debris required to be removed from the CBs shall be removed in a manner to be determined by the Contractor. This can be done by hand or with a truck mounted vacuum. If entering the catch basin ensure that local confined space entry procedures are followed. The Contractor shall not allow any trash or debris to enter the connector pipe or main line as a result of the cleanout operations.

Debris Disposal: All trash and debris removed under this Contract shall become the property of the Contractor and shall be legally disposed of away from the CB sites. The Contractor is responsible for proper disposal of the trash and debris, including obtaining approvals from all jurisdictional agencies, as applicable. The contractor shall be responsible for contacting and coordinating with local Animal Care and Control for pickup and disposal of dead animals. However, the Contractor shall be responsible for removing any dead animal from inside a CB.

NOTES:

1. All Materials Are Type 304SS Unless Otherwise Noted
2. All Horizontal And Vertical Stiffeners Shall Be Spot Welded @ 4"C.C. (Max) To Perforated Screen
3. For Catch Basin Uneven Floor Extension Panel Detail See Sh. 3

LOS ANGELES COUNTY
DEPARTMENT OF PUBLIC WORKS

- [X] ACCEPTED
- [ ] MAKE CORRECTIONS NOTED
- [ ] REVISE CALCULATIONS
- [ ] REJECTED

REVIEW IS PERFORMED BY THE DEPARTMENT TO ENSURE THE CONTRACTOR'S GENERAL CONFORMANCE WITH THE DESIGN CONCEPT OF THE PROJECT AND GENERAL COMPLIANCE WITH THE SPECIFICATIONS. THE CONTRACTOR IS SOLELY RESPONSIBLE FOR THE CORRECTNESS OF DIMENSIONS, PROPER CONSTRUCTION AND INSTALLATION METHODS, AND FOR FULFILLING ALL CONTRACTUAL REQUIREMENTS. ACCEPTANCE INDICATED HEREON DOES NOT RELIEVE THE CONTRACTOR OF THESE OBLIGATIONS.

BY Steven Dickson DATE 07-28-16

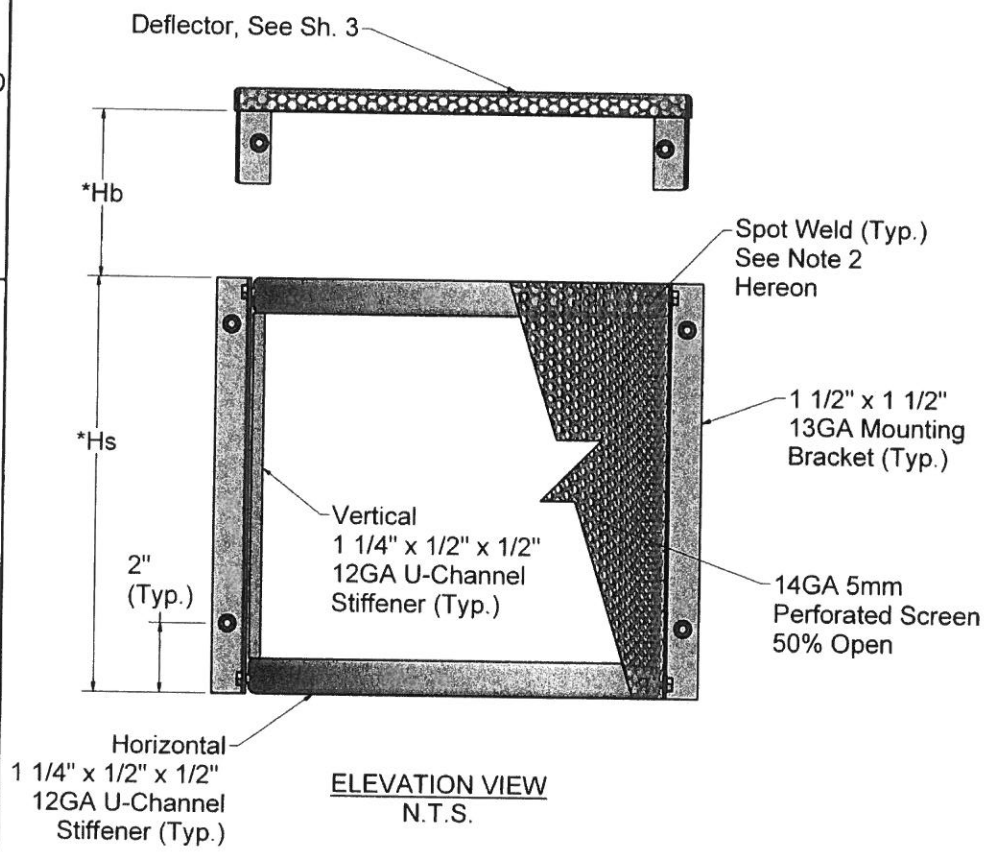

ELEVATION VIEW
N.T.S.

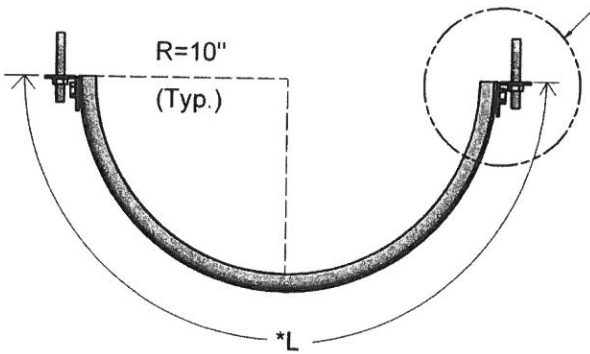

PLAN VIEW
N.T.S.

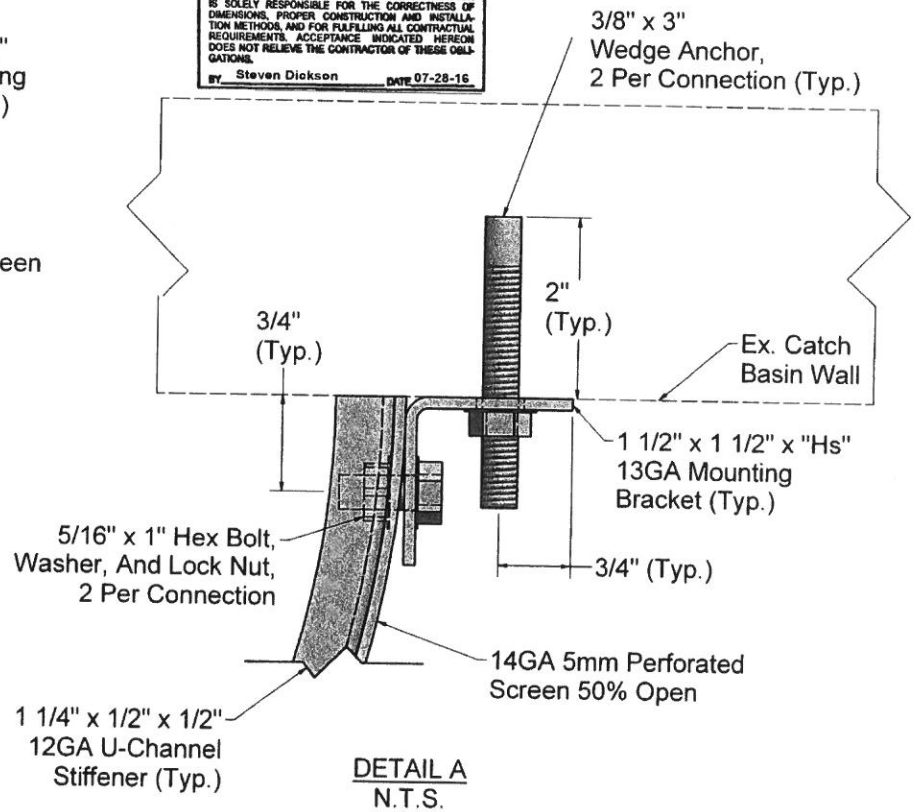

DETAIL A
N.T.S.

*See Appendix A-1 And CPS Sizing Table For Hb, Hs, And L Values

	ADS FLEXSTORM CPS U
TITLE	PLAN, ELEVATION, AND DETAIL
SIZE C	DATE 7/25/2016
REV	A
SHEET	1 OF 3

NOTES:

1. All Materials Are Type 304SS Unless Otherwise Noted
2. All Horizontal And Vertical Stiffeners Shall Be Spot Welded @ 4"C.C. (Max) To Perforated Screen
3. Center Stiffener Required When S ≥ 3'-0"
4. Top And Center Base Support Brackets Required When S ≥ 3'-0"
5. 3" Base Support Bracket At The Inflection Point Required For All Units
6. For Catch Basin Uneven Floor Extension Panel Detail See Sh. 4

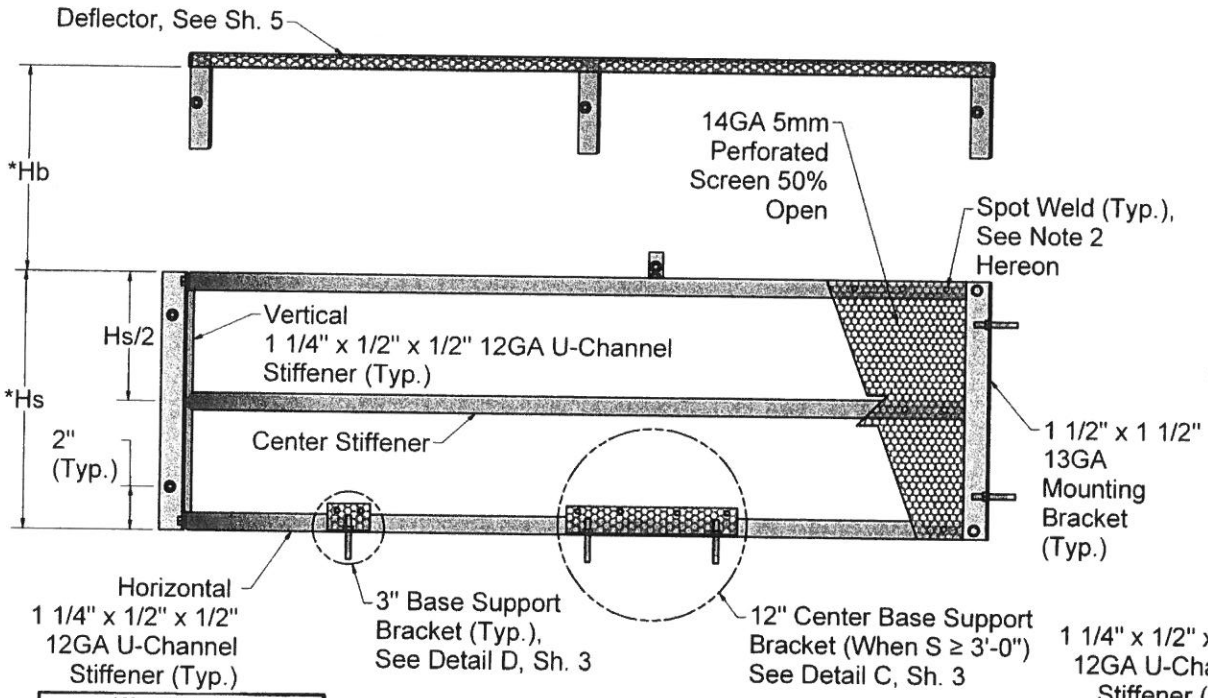

ELEVATION VIEW
N.T.S.

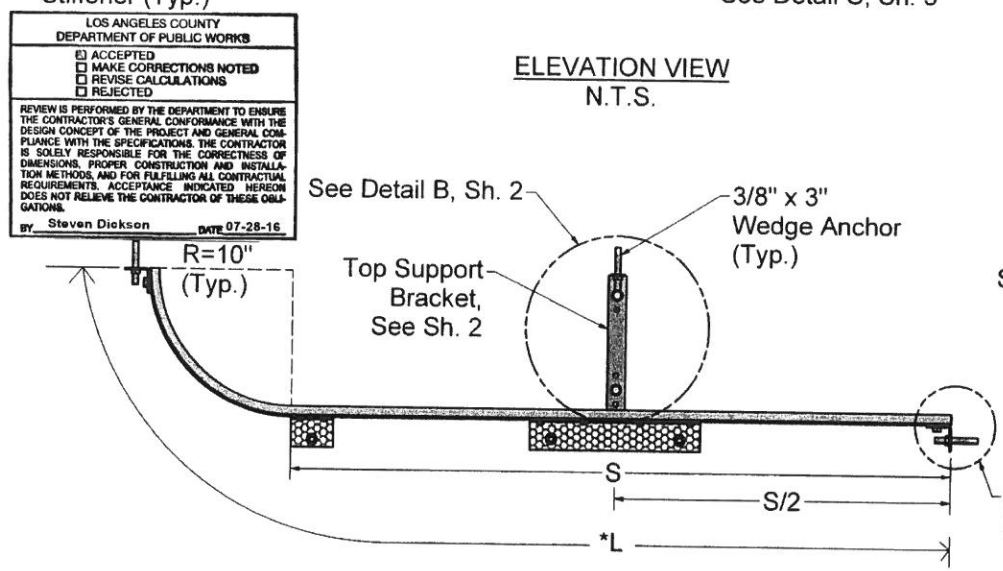

PLAN VIEW
N.T.S.

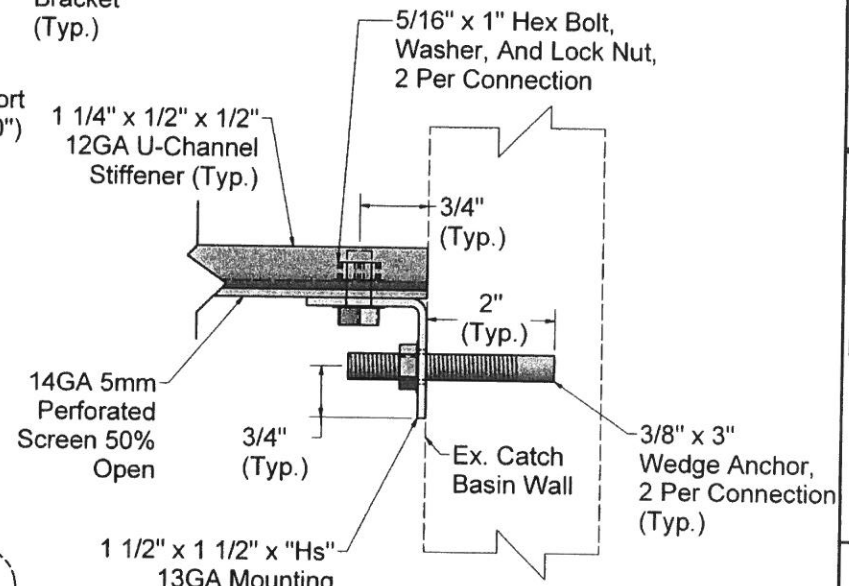

DETAIL A
N.T.S.

LOS ANGELES COUNTY
DEPARTMENT OF PUBLIC WORKS

- ☑ ACCEPTED
- ☐ MAKE CORRECTIONS NOTED
- ☐ REVISE CALCULATIONS
- ☐ REJECTED

REVIEW IS PERFORMED BY THE DEPARTMENT TO ENSURE THE CONTRACTOR'S GENERAL CONFORMANCE WITH THE DESIGN CONCEPT OF THE PROJECT AND GENERAL COMPLIANCE WITH THE SPECIFICATIONS. THE CONTRACTOR IS SOLELY RESPONSIBLE FOR THE CORRECTNESS OF DIMENSIONS, PROPER CONSTRUCTION AND INSTALLATION METHODS, AND FOR FULFILLING ALL CONTRACTUAL REQUIREMENTS. ACCEPTANCE INDICATED HEREON DOES NOT RELIEVE THE CONTRACTOR OF THESE OBLIGATIONS.

BY Steven Dickson DATE 07-28-16

*See Appendix A-1 And CPS Sizing Table For Hb, Hs, And L Values

	ADS FLEXSTORM CPS L
TITLE	PLAN, ELEVATION, AND DETAIL
SIZE C	DATE 7/25/2016
REV A	SHEET 1 OF 5

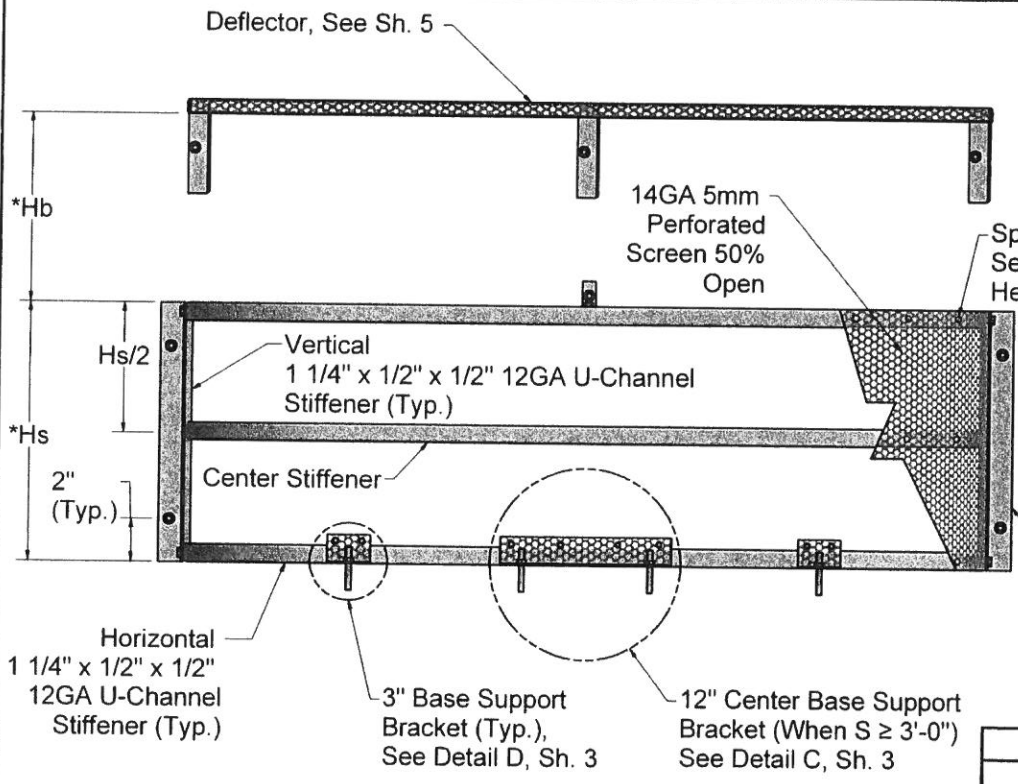

ELEVATION VIEW
N.T.S.

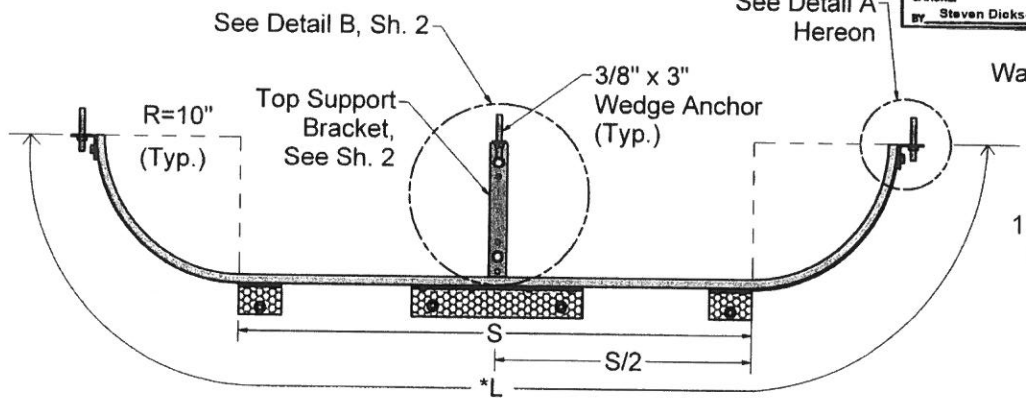

PLAN VIEW
N.T.S.

NOTES:
1. All Materials Are Type 304SS Unless Otherwise Noted
2. All Horizontal And Vertical Stiffeners Shall Be Spot Welded @ 4"C.C. (Max) To Perforated Screen
3. Center Stiffener Required When S ≥ 3'-0"
4. Top And Center Base Support Brackets Required When S ≥ 3'-0"
5. 3" Base Support Bracket At The Inflection Points Required For All Units
6. For Catch Basin Uneven Floor Extension Panel Detail See Sh. 4

LOS ANGELES COUNTY
DEPARTMENT OF PUBLIC WORKS
☑ ACCEPTED
☐ MAKE CORRECTIONS NOTED
☐ REVISE CALCULATIONS
☐ REJECTED
REVIEW IS PERFORMED BY THE DEPARTMENT TO ENSURE THE CONTRACTOR'S GENERAL CONFORMANCE WITH THE DESIGN CONCEPT OF THE PROJECT AND GENERAL COMPLIANCE WITH THE SPECIFICATIONS. THE CONTRACTOR IS SOLELY RESPONSIBLE FOR THE CORRECTNESS OF DIMENSIONS, PROPER CONSTRUCTION AND INSTALLATION METHODS, AND FOR FULFILLING ALL CONTRACTUAL REQUIREMENTS. ACCEPTANCE INDICATED HEREON DOES NOT RELIEVE THE CONTRACTOR OF THESE OBLIGATIONS.
BY Steven Dickson DATE 07-28-16

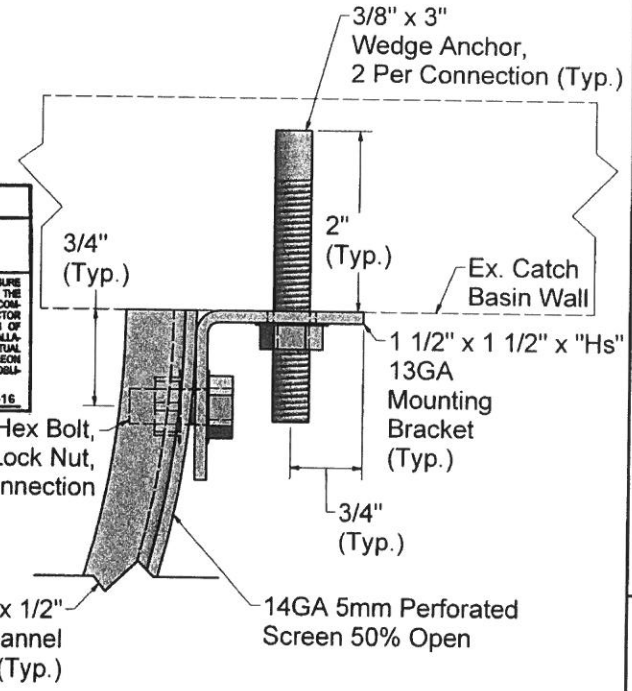

* See Appendix A-1 And CPS Sizing Table For Hb, Hs, And L Values

TITLE	ADS FLEXSTORM CPS U EXT	
	PLAN, ELEVATION, AND DETAIL	
SIZE C	DATE 7/25/2016	REV A
	SHEET 1 OF 5	

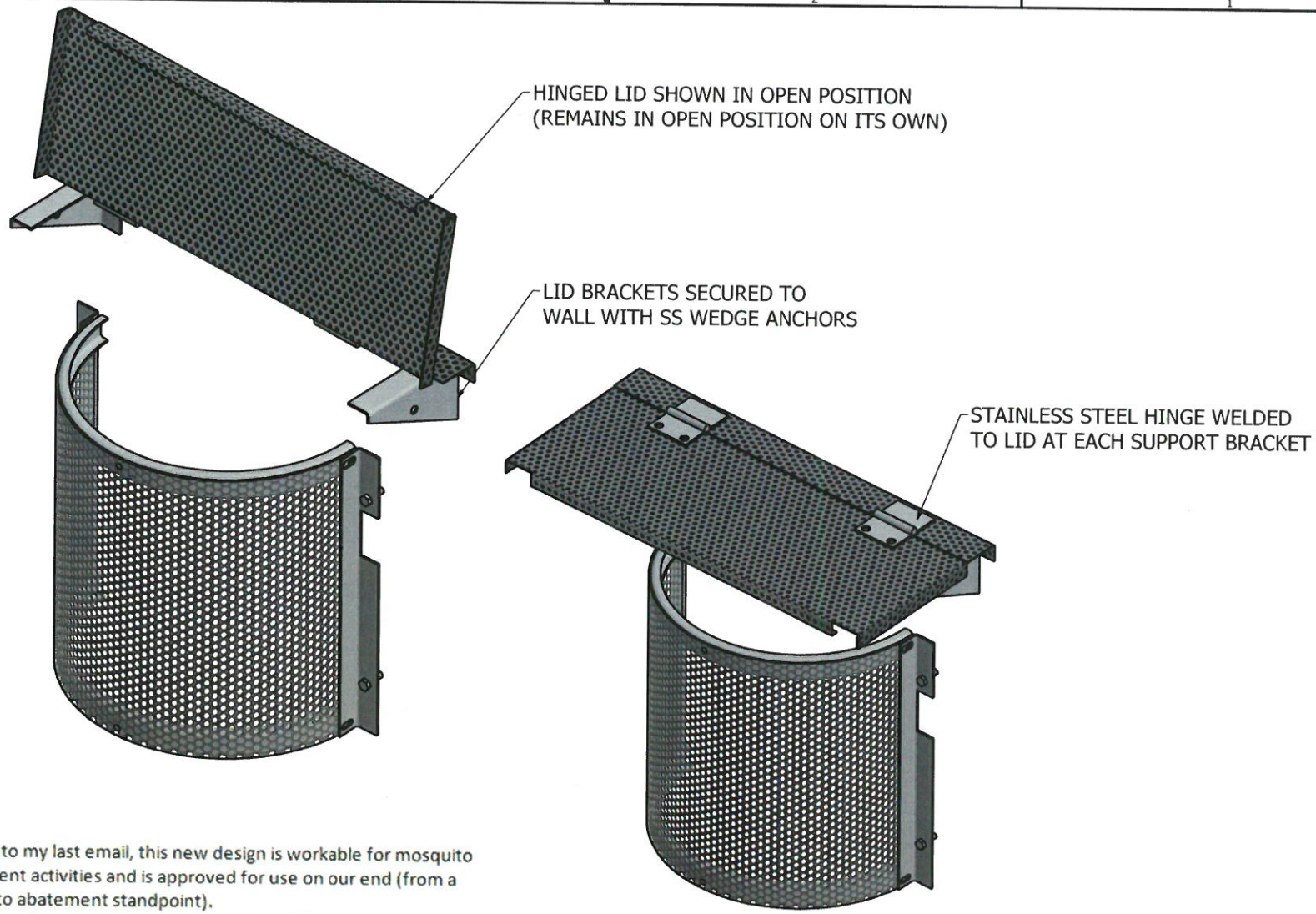

Further to my last email, this new design is workable for mosquito abatement activities and is approved for use on our end (from a mosquito abatement standpoint).
Thanks to all involved for the work and modification to the device.

Joseph Huston
Field Operations Supervisor

joseph@mosquitoes.org
O: 510-783-7744 | F: 510-783-3903
23187 Connecticut St., Hayward, CA 94545

ALAMEDA COUNTY MOSQUITO ABATEMENT DISTRICT HINGED LID DESIGN

ALL PRODUCTS MANUFACTURED
BY INLET & PIPE PROTECTION, INC
A DIVISION OF ADS, INC.
WWW.INLETFILTERS.COM
(866) 287-8655 PH
(630) 355-3477 FX
INFO@INLETFILTERS.COM

THIS PRINT DISCLOSES SUBJECT MATTER IN WHICH FLEXSTORM HAS PROPRIETARY RIGHTS. THE ACCEPT OR POSSESSION OF THIS PRINT DOES NOT CONFER, TRANSFER, OR LICENSE THE USE OF THE DESIGN OR TECHNICAL INFORMATION SHOWN HEREIN. REPRODUCTION OF THIS PRINT OR ANY INFORMATION CONTAINED HEREIN, OR MANUFACTURE OF ANY ARTICLE HEREFROM, FOR THE DISCLOSURE TO OTHERS IS FORBIDDEN, EXCEPT BY WRITTEN PERMISSION FROM FLEXSTORM.
©2013 ADS, INC.

SIZE	FRAME TYPE	DWG NO	REV
C	CPS	FLEXSTORM-CPS	A

SCALE | SHEET 1 OF 1

REMOVABLE CPS DETAIL

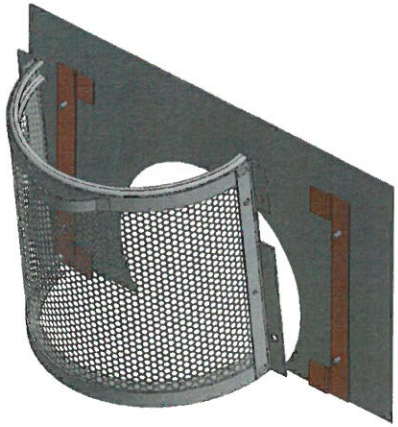

STEP 1

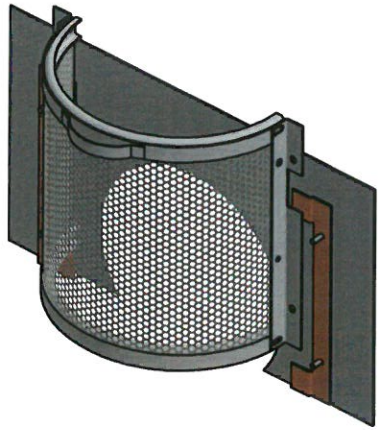

STEP 2

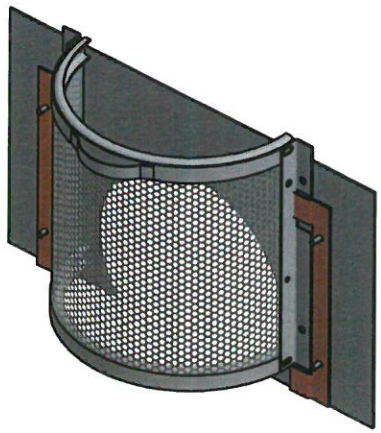

STEP 3

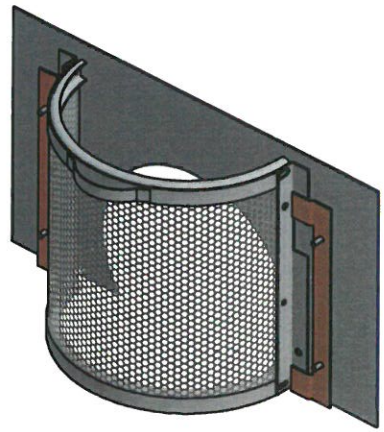

STEP 4

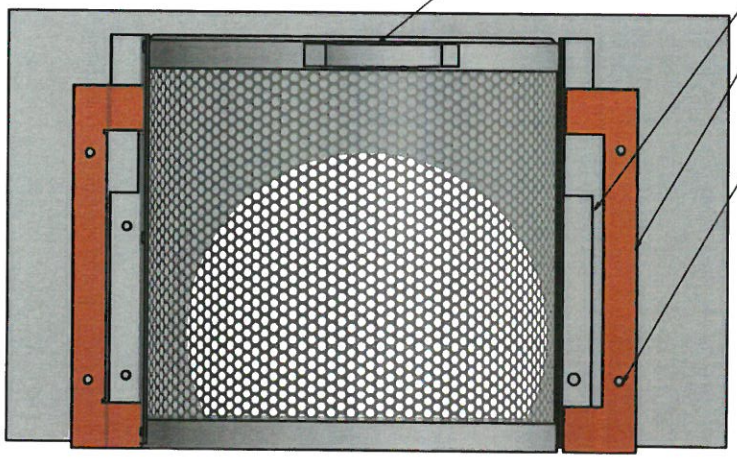

INSTALLATION INSTRUCTIONS

1. LOWER SCREEN INTO CATCH BASIN THROUGH MANHOLE OPENING.

2. RAISE THE UNIT ABOVE THE WALL MOUNTED BRACKETS.

3. MOVE THE UNIT TOWARDS WALL UNTIL FLANGES ARE FLUSH WITH WALL.

4. LOWER THE SCREEN ~3" UNTIL CPS FLANGES ARE CAPTURED BEHIND WALL MOUNTED BRACKETS. ENSURE BASE IS FLUSH TO CATCH BASIN FLOOR.

DRAWN dgarb	3/30/2015			
CHECKED		TITLE		
QA				
MFG				
APPROVED				
		SIZE C	DWG NO Removable CPS 1	REV
		SCALE	SHEET 1 OF 1	

ADS CPS FIELD PHOTOS
BEFORE and AFTER MAINTENANCE


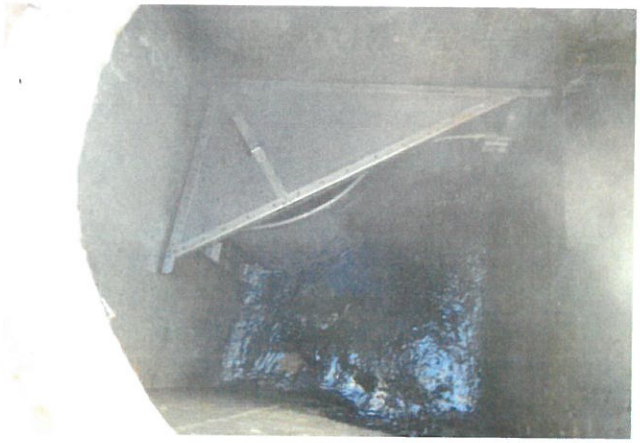







GEOLABS-WESTLAKE VILLAGE
Foundation and Soils Engineering, Geology
31119 Via Colinas, Suite 502 • Westlake Village, CA 91362
Voice: (818) 889-2562 (805) 495-2197
Fax: (818) 889-2995 (805) 379-2603
a dba of
R & R Services
Corporation

October 19, 2018
W.O. 9359

New Urban West, Inc.
1733 Ocean Avenue, Suite 260
Santa Monica, California 90401

Attention: Johnathan Frankel

SUBJECT: Feasibility of On-Site Stormwater Infiltration
Unnamed Tentative Tract, Camarillo Springs,
City of Camarillo, California

Mr. Frankel,

In accordance with your request we have prepared this letter-report regarding the contemplated storm water infiltration for the proposed residential development of a portion of the golf course at Camarillo Springs. In short, we believe infiltration within the residential development is *not* feasible. The basis for our belief is discussed below.

Near surface soils at the site consist primarily of clay-rich mixtures that contain variable amounts of silt and subordinate sand. Over the years, these soils have been observed in numerous borings and trenches. Water has been observed flowing from small sand stringers that occur sporadically within the soil, while the intervening clayey soil shows no sign of seepage, attesting to its low permeability even when in a poorly compacted state. When compacted, as they will be for the residential development, such soils have very slow infiltration rates; infiltration rates below the threshold for stormwater infiltration systems.

Ground water occurs at shallow depths throughout the development area; too shallow to allow stormwater infiltration systems. Piezometers set at 10 to 20 feet below the surface show pressure heads that place the piezometric surface 2 – 3 feet below the surface.

This geotechnical report has been prepared in accordance with generally accepted engineering practices at this time and location. No other express or implied warranty

regarding to the professional opinions provided under the terms of our agreement and included in this report is made.

Thank you for this opportunity to be of service. Please do not hesitate to call if you have any questions regarding this report.

Respectfully submitted,
GEOLABS-WESTLAKE VILLAGE



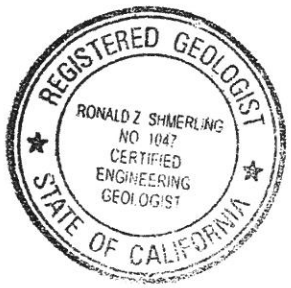

Ronald Z. Shmerling
C.E.G. 1047
R.C.E. 35444

XC: (2) Addressee
(1) Jensen Design & Civil, Attention: Kinsey Hensley
(3) City of Camarillo, c/o Jensen Design & Civil

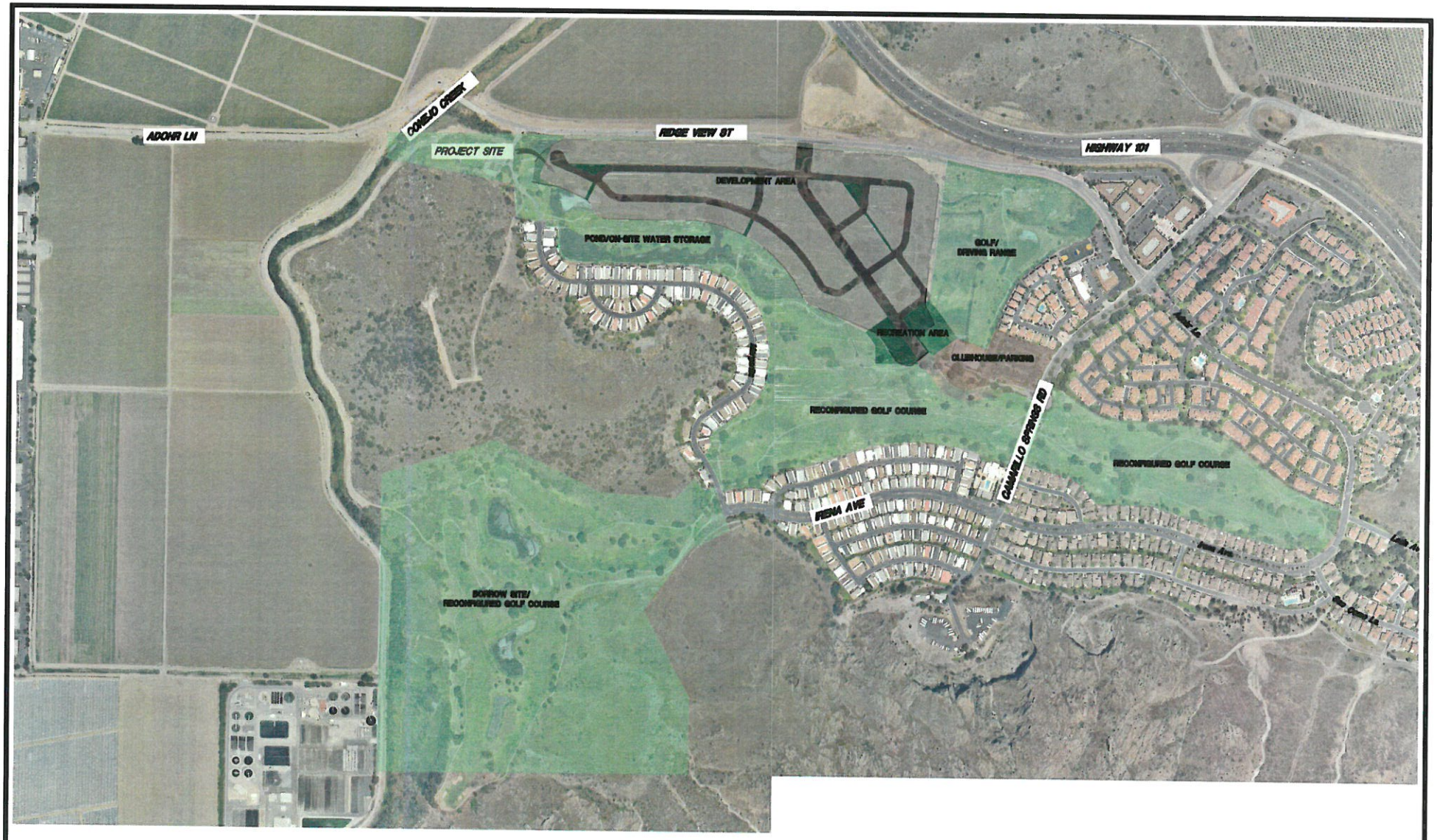

JENSEN DESIGN & SURVEY, INC
1672 DONLON STREET
VENTURA, CALIF. 93003
PHONE 805/654-6977
FAX 805/654-6979

LOCATION MAP

CAMARILLO SPRINGS

SHEET 1 OF 1

Dec 17, 2018