Appendix A Traffic Impact Analysis

TECHNICAL MEMORANDUM

SAN BERNARDINO CITY UNIFIED SCHOOL DISTRICT POLICE DEPARTMENT AND PUBLIC SAFETY HEADQUARTERS TIA

TRAFFIC IMPACT STUDY

Prepared for the San Bernardino City Unified School District
by Arcadis

Updated August 28, 2024

1 INTRODUCTION 6
1.1 STUDY PURPOSE 6
1.2 REPORT ORGANIZATION 6
2 PROJECT DESCRIPTION 7
2.1 PROJECT BACKGROUND 7
3 ANALYSIS METHODOLOGY 9
3.1 STUDY AREA INTERSECTIONS/ROADWAY SEGMENTS 9
3.2 TRAFFIC COUNT DATA 10
3.3 AVERAGE DAILY TRAFFIC LEVEL OF SERVICE ANALYSIS 11
3.4 INTERSECTION LEVEL OF SERVICE ANALYSIS 12
3.4.1 SIGNALIZED INTERSECTIONS 12
3.4.2 UNSIGNALIZED INTERSECTIONS 13
4 EXISTING YEAR (2023) NO PROJECT 14
4.1 EXISTING ROADWAY NETWORK 14
4.2 AVERAGE DAILY TRAFFIC 15
4.3 INTERSECTION LEVEL OF SERVICE 15
5 OPENING YEAR (2024) NO PROJECT 18
5.1 AVERAGE DAILY TRAFFIC 18
5.2 INTERSECTION LEVEL OF SERVICE 18
6 BUILD OUT YEAR (2040) NO PROJECT 20
6.1 AVERAGE DAILY TRAFFIC 20
6.2 INTERSECTION LEVEL OF SERVICE 20
7 PROJECT TRAFFIC 22
7.1 TRIP GENERATION 22
7.2 TRIP DISTRIBUTION 23
8 EXISTING YEAR (2023) WITH PROJECT 26
8.1 AVERAGE DAILY TRAFFIC 26
8.2 INTERSECTION LEVEL OF SERVICE 26
9 OPENING YEAR (2024) WITH PROJECT 29
9.1 AVERAGE DAILY TRAFFIC 29
9.2 INTERSECTION LEVEL OF SERVICE 29
10 BUILD OUT YEAR (2040) WITH PROJECT 32
10.1 AVERAGE DAILY TRAFFIC 32

10.2 INTERSECTION LEVEL OF SERVICE 32

11 MITIGATION MEASURES 35

11.1 SIGNIFICANT IMPACT IDENTIFICATION 35

12 CONCLUSIONS 37

13 APPENDICES 38

LIST OF FIGURES

FIGURE 2.1: PROJECT LOCATION MAP 8
FIGURE 4.1: STUDY INTERSECTION LANE GEOMETRY 16
FIGURE 4.2: EXISTING YEAR (2023) NO PROJECT VOLUMES 17
FIGURE 5.1: OPENING YEAR (2024) NO PROJECT VOLUMES 19
FIGURE 6.1: BUILD OUT YEAR (2040) NO PROJECT VOLUMES..... 21
FIGURE 7.1: PROJECT TRIP DISTRIBUTION..... 24
FIGURE 7.2: PROJECT TRIPS..... 25
FIGURE 8.1: EXISTING YEAR (2023) WITH PROJECT VOLUMES 28
FIGURE 9.1: OPENING YEAR (2024) WITH PROJECT VOLUMES 31
FIGURE 10.1: BUILD OUT YEAR (2040) WITH PROJECT VOLUMES..... 34

LIST OF TABLES

TABLE 3.1: ROADWAY DAILY VOLUME THRESHOLDS 11

TABLE 3.2: LINK LEVEL OF SERVICE DEFINITION 11

TABLE 3.3: LEVEL OF SERVICE FOR SIGNALIZED INTERSECTIONS 12

TABLE 3.4: LEVEL OF SERVICE FOR UNSIGNALIZED INTERSECTIONS 13

TABLE 4.1: EXISTING YEAR (2023) NO PROJECT ROADWAY SEGMENT DATA COLLECTION SUMMARY 15

TABLE 4.2: EXISTING YEAR (2023) NO PROJECT INTERSECTION LOS 15

TABLE 5.1: OPENING YEAR (2024) NO PROJECT ROADWAY SEGMENT SUMMARY 18

TABLE 5.2: OPENING YEAR (2024) NO PROJECT INTERSECTION LEVEL OF SERVICE 18

TABLE 6.1: OPENING YEAR (2024) NO PROJECT ROADWAY SEGMENT SUMMARY 20

TABLE 6.2: BUILD OUT (2040) NO PROJECT INTERSECTION LEVEL OF SERVICE. 20

TABLE 7.1: PROJECT TRIP GENERATION RATES 23

TABLE 8.1: EXISTING YEAR (2023) WITH PROJECT ROADWAY SEGMENT SUMMARY 26

TABLE 8.2: EXISTING YEAR (2023) AM PEAK HOUR WITH PROJECT INTERSECTION LOS 26

TABLE 8.3: EXISTING YEAR (2023) PM PEAK HOUR WITH PROJECT INTERSECTION LOS 27

TABLE 9.1: OPENING YEAR (2024) WITH PROJECT ROADWAY SEGMENT SUMMARY 29

TABLE 9.2: OPENING YEAR (2024) AM PEAK HOUR WITH PROJECT INTERSECTION LOS 29

TABLE 9.3: OPENING YEAR (2024) PM PEAK HOUR WITH PROJECT INTERSECTION LOS 30

TABLE 10.1: OPENING YEAR (2024) WITH PROJECT ROADWAY SEGMENT SUMMARY 32

TABLE 10.2: BUILD OUT YEAR (2040) AM PEAK HOUR WITH PROJECT INTERSECTION LOS 33

TABLE 10.3: BUILD OUT YEAR (2040) PM PEAK HOUR WITH PROJECT INTERSECTION LOS 33

TABLE 11.1: EXISTING YEAR (2023) INTERSECTION CAPCITY UTILIZATION (ICU) RESULTS SUMMARY PEAK HOUR WITH PROJECT INTERSECTION LOS 36

TABLE 11.2: OPENING YEAR (2024) INTERSECTION CAPCITY UTILIZATION (ICU) RESULTS SUMMARY PEAK HOUR WITH PROJECT INTERSECTION LOS 36

TABLE 11.3: BUILD OUT YEAR (2040) INTERSECTION CAPCITY UTILIZATION (ICU) RESULTS SUMMARY PEAK HOUR WITH PROJECT INTERSECTION LOS 36

1 INTRODUCTION

1.1 STUDY PURPOSE

This traffic analysis report has been prepared for the San Bernardino City Unified School District (SBCUSD) regarding a Police Department and Public Safety Headquarters (the Project) proposed at 701 North E Street in San Bernardino, California.

1.2 REPORT ORGANIZATION

This report is organized into the following sections:

1. Introduction
2. Project Description
3. Analysis Methodology
4. Existing Year (2023) No Project
5. Opening Year (2024) No Project
6. Build Out Year (2040) No Project
7. Project Traffic
8. Existing Year (2023) With Project
9. Opening Year (2024) With Project
10. Build Out Year (2040) With Project
11. Mitigation Measures
12. Fair Share Contribution
13. Conclusions
14. Appendices

Section 1 provides a brief introduction to the study purpose and report organization. Section 2 provides a description of the proposed project. Section 3 includes the methodology utilized in the analysis and the referenced standards. The No Project Existing (2023), Opening (Year 2024), and Build Out Year (2040) scenarios for the study area roadways, intersection geometry, turning movement volumes, and level of service are presented in Sections 4, 5, and 6. Section 7 describes the project trip generation, distribution, and assignment. The With Project Existing Year (2023), Opening Year (2024), and Build Out Year (2040) scenarios for the study area roadways, intersection geometry, turning movement volumes, and level of service are presented in Sections 8, 9, and 10. Section 11 presents the mitigation measures to address facilities operating at an unacceptable level of service. Section 12 provides mitigation fair share cost calculations. Findings and conclusions from this study are presented in Section 13. Lastly, the appendices are provided in Section 14.

2 PROJECT DESCRIPTION

2.1 PROJECT BACKGROUND

The San Bernardino City Unified School District (SBCUSD) plans to operate a new Police Department and Public Safety Headquarters at 701 North E Street in San Bernardino, California. The project is proposed to be 16,800 square feet and house a variety of existing and new school district departments, and the existing school district police operations located at 536 West Base Line Street, approximately a half mile north of the project site. The project location is illustrated in Figure 2.1.

The project site will be accessed from North E Street via two driveways located approximately 200 feet apart. There will be a turnout on the south side and the north side of the south driveway. There will be a visitor parking lot south of the building with eight (8) standard stalls and one (1) accessible stall. The visitor entrance is on the south side of the building, adjacent to the visitor parking lot. The staff and patrol parking lot is located on the east and north sides of the building, and will contain 101 standard stalls and five (5) accessible stalls. The staff entrance will be on the northeast side of the building.

FIGURE 2.1 - PROJECT LOCATION MAP

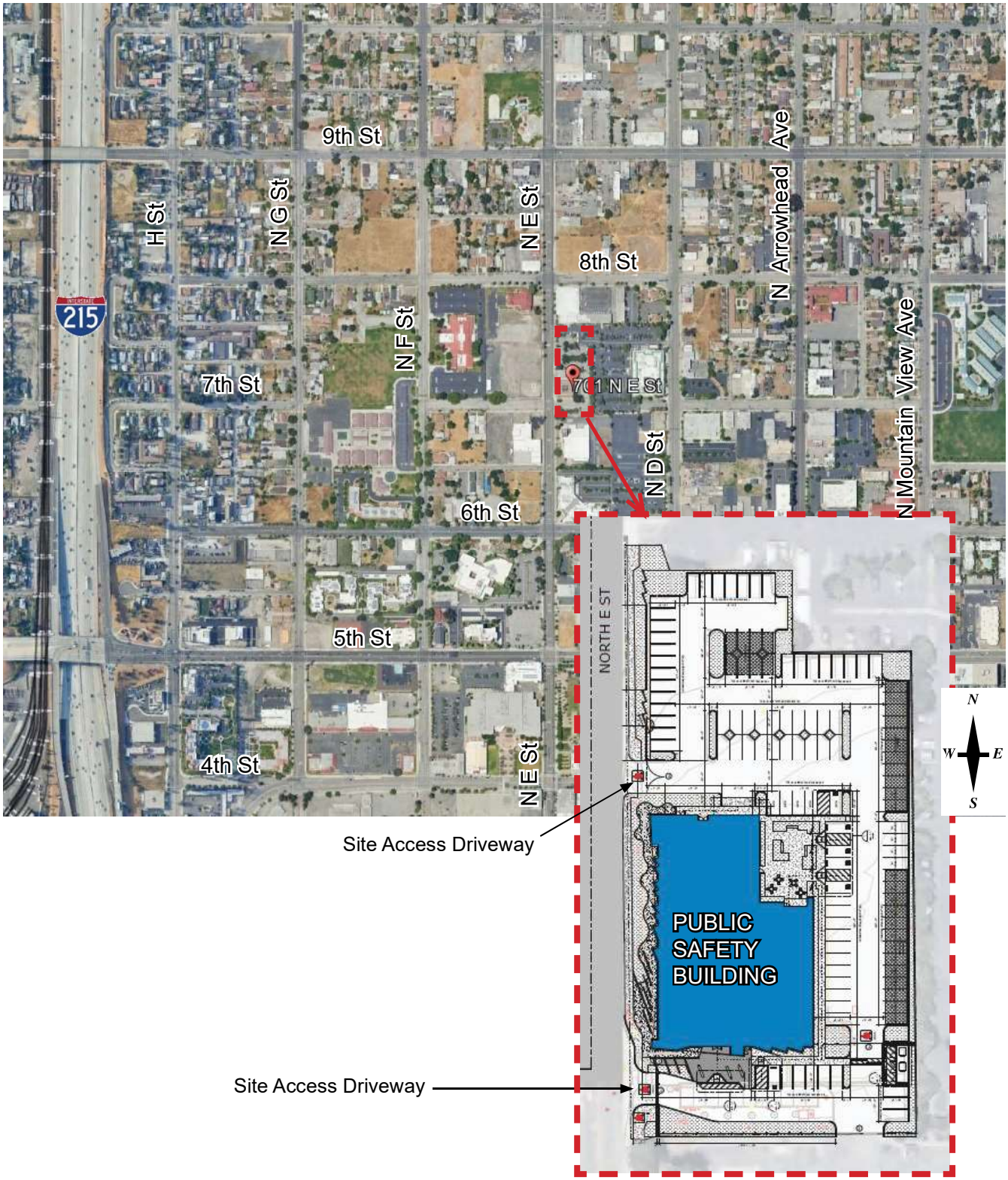

3 ANALYSIS METHODOLOGY

The traffic analysis for the project will follow the City of San Bernardino traffic impact analysis guidelines. The intersection analysis methodology and performance criteria used in this analysis conform to the City of San Bernardino's requirements for traffic impact studies prepared consistent with the California Environmental Quality (CEQA) guidelines. These guidelines comply with the latest version of the Highway Capacity Manual (HCM) and the methodologies and rates outlined in the Institute of Transportation Engineers (ITE) handbook. The traffic analysis conducted includes an assessment of traffic conditions for eight existing intersections and three roadway segments located within the project location. Analysis scenarios and horizon years are summarized for the following time scenarios:

- Existing Year (2023) No Project
- Opening Year (2024) No Project
- Build Out Year (2040) No Project
- Existing Year (2023) With Project
- Opening Year (2024) With Project
- Build Out Year (2040) With Project

3.1 STUDY AREA INTERSECTIONS/ROADWAY SEGMENTS

Based on the project trip generation and distribution and consultation with City staff, the following eight study area intersections were analyzed in this report:

1. E Street and 9th Street
2. E Street and 8th Street
3. E Street and 6th Street
4. E Street and 5th Street
5. F Street and 9th Street
6. F Street and 8th Street
7. F Street and 6th Street
8. F Street and 5th Street

Additionally, the following three roadway segments were included:

1. 9th Street between H Street and E Street
2. E Street between 9th Street and 5th Street
3. 5th Street between H Street and E Street

3.2 TRAFFIC COUNT DATA

The turning movement counts were taken on Wednesday, January 11, 2023 at the eight (8) study intersections during the morning peak period (7:00 AM to 9:00 AM) and the afternoon peak period (4:00 PM to 6:00 PM). The AM and PM peak analyses are based on the hour of highest total intersection volume during the morning and afternoon periods. Twenty-four hour counts were collected on Wednesday, January 11, 2023 at the three (3) roadway segments. The daily segment and peak hour intersection count data sheets are included in Appendix B of this report.

A growth rate of 6% (equivalent to 3% per year over two years) was applied to the 2023 count data to calculate the Opening Year (2024) volumes. The ambient traffic growth factor is intended to account for unknown and future cumulative projects in the study area, and cumulative traffic generated by projects outside the study area. For Build Out Year (2040), volumes were developed based on the San Bernardino Transportation Analysis Model (SBTAM) to account for future traffic volumes and growth.

3.3 AVERAGE DAILY TRAFFIC LEVEL OF SERVICE ANALYSIS

The capacity thresholds used to determine the delay and LOS of roadway segments are referenced in the County of San Bernardino General Plan Program. Table 3.1 outlines the roadway daily volume thresholds. LOS D is established as the standard in the Valley and Mountain Regions. This study uses the Valley thresholds for analysis.

TABLE 3.1: ROADWAY DAILY VOLUME THRESHOLDS

# OF LANES	VALLEY[1]	MOUNTAIN[2]	DESERT[3]
2	14,600	13,600	7,000
4	31,100	29,300	16,400
6	46,800	44,100	25,700

Source: County of San Bernardino, 2006 General Plan Program

The average daily traffic level of service analysis was conducted by calculating the traffic volume in each direction for a specified link segment. A volume-to-capacity (V/C) ratio was taken and respective letter grade assigned at each location using the range of V/C values shown in Table 3.2. LOS D is taken to be the minimum. Link volumes and the associated LOS are presented for informational purposes only.

TABLE 3.2: LINK LEVEL OF SERVICE DEFINITION

LEVEL OF SERVICE	RANGE OF V/C RATIOS	DEFINITION
A	0.00 – 0.60	**Free Flow:** Vehicles are completely unimpeded in their ability to maneuver within the traffic stream. Control delay at intersections is minimal. The travel speed exceeds 85% of the base free-flow speed.
B	0.61 – 0.70	**Stable Flow:** The ability to maneuver within the traffic stream is only slightly restricted and control delay at intersections is not significant. The travel speed is between 67% and 85% of base free-flow speed.
C	0.71 – 0.80	**Stable Flow:** The ability to maneuver and change lanes at mid-segment locations may be more restricted than at LOS B. Longer queues at intersections may contribute to lower travel speeds. The travel speed is between 50% and 67% of the base free-flow speed.
D	0.81 – 0.90	**Approaching Unstable Flow:** Small increases in flow may cause substantial increases in delay and decreases in travel speed. The travel speed is between 40% and 50% of the base free-flow speed.
E	0.91 – 1.00	**Unstable Flow:** Significant delay is commonly experienced. The travel speed is between 30% and 40% of the base free-flow speed.
F	> 1.00	**Forced Flow:** Congestion is likely occurring at intersections, as indicated by high delay and extensive queuing. The travel speed is 30% or less of the base free-flow speed.

Source: *Transportation Research Circular No. 212, Interim Materials on Highway Capacity,* Transportation Research Board, 1980.

[1] Major City/County Roadway, Urbanized Area, LOS D
[2] Major City/County Roadway, Transitioning and Non-Urbanized Area, LOS D
[3] Major City/County Roadway, Areas over 5,000 not in Urbanized Area, LOS C

3.4 INTERSECTION LEVEL OF SERVICE ANALYSIS

Traffic conditions at signalized and unsignalized intersections were evaluated using the Highway Capacity Manual 2010 (HCM 2010) operations methodology consistent with the City of San Bernardino traffic analysis procedures. This study used a maximum saturation volume of 1,600 vehicles per hour per lane (VPHPL) for turn and through lanes for the study intersection analysis. The HCM analysis reports referenced in this document can be found in Appendix D.

3.4.1 SIGNALIZED INTERSECTIONS

The HCM 2010 methodology defines Level of Service (LOS) as a qualitative measure that describes operational conditions within a traffic stream, generally in terms of factors such as speed and travel time, freedom to maneuver, traffic interruptions, comfort and convenience, and safety. The criteria used to evaluate LOS conditions vary based on the type of street and whether the traffic flow is considered interrupted or uninterrupted. The six qualitative categories of LOS and corresponding average delay that have been defined are presented below in Table 3.3 where LOS D is taken to be the minimum. Table 3.4 outlines the significant impact thresholds used in the traffic analysis.

TABLE 3.3: LEVEL OF SERVICE FOR SIGNALIZED INTERSECTIONS

LOS	DESCRIPTION	DELAY (SEC)
A	No approach phase is fully utilized by traffic, and no vehicle waits longer than one red indication. Typically, the approach appears quite open, turns are made easily, and nearly all drivers find freedom of operation.	0.0 -10.0
B	This service level represents stable operation, where an occasional approach phase is fully utilized, and a substantial number are nearing full use. Many drivers begin to feel restricted within platoons of vehicles.	10.1 – 20.0
C	This level still represents stable operating conditions. Occasionally, drivers may have to wait through more than one red signal indication, and backups may develop behind turning vehicles. Most drivers feel somewhat restricted, but not objectionably so.	20.1 – 35.0
D	This level encompasses a zone of increasing restriction approaching instability at the intersection. Delays to approaching vehicles may be substantial during short peaks within the peak period; however, enough cycles with lower demand occur to permit periodic clearance of developing queues, thus preventing excessive backups.	35.1 – 55.0
E	Capacity occurs at the upper end of this service level. It represents the most vehicles that any particular intersection approach can accommodate. Full utilization of every signal cycle is attained no matter how great the demand.	55.1 – 80.0
F	This level describes forced flow operations at low speeds, where volumes exceed capacity. These conditions usually result from queues of vehicles backing up from a restriction downstream. Speeds are reduced substantially, and stoppages may occur for short or long periods of time due to the congestion. In the extreme case, speed can drop to zero.	80.1 or more

Source: Highway Capacity Manual (Transportation Research Board, 2010)

TABLE 3.4: SIGNIFICANT IMPACT THRESHOLD FOR SIGNALIZED INTERSECTIONS

LOS NO PROJECT	V/C DIFFERENCE
C	>0.0400
D	>0.0200
E, F	>0.0100

Source: City of San Bernardino Development Services Department, Traffic Impact Study Guidelines

3.4.2 UNSIGNALIZED INTERSECTIONS

The two types of unsignalized intersections include side-street stop controlled (SSSC) and all-way stop controlled (AWSC). The level of service for a side-street stop controlled intersection is determined by the computed or measured control delay at each minor-street movement. LOS F would occur when the volume-to-capacity ratio exceeds 1.0, regardless of the control delay. The delay range for unsignalized intersections is different from those of signalized intersections primarily due to driver expectation. The expectation is that signalized intersections are designed to carry higher volumes of traffic and therefore higher levels of delay are acceptable. The HCM 2010 methodology estimates the delay based on the worse approach at unsignalized intersections. The table below includes the LOS ranges for both unsignalized intersection types. LOS D is taken the be the minimum.

TABLE 3.5: LEVEL OF SERVICE FOR UNSIGNALIZED INTERSECTIONS

LEVEL OF SERVICE	DESCRIPTION	CONTROL DELAY (SEC/VEH)
A	Little or no delays	0.0 – 10.0
B	Short traffic delays	10.1 – 15.0
C	Average traffic delays	15.1 – 25.0
D	Long traffic delays	25.1 – 35.0
E	Very long traffic delays	35.1 – 50.0
F	Extreme traffic delays with intersection capacity exceeded	50.1 or more

Source: Highway Capacity Manual (Transportation Research Board, 2010)

4 EXISTING YEAR (2023) NO PROJECT

This section presents the Existing Year (2023) No Project scenario conditions of the project study area; this scenario will serve as the base for which all upcoming scenarios are assessed. The study area encompasses arterial roadways and signalized intersections within the project area. Descriptions of the existing roadway network and intersection level of service analysis results for the Existing Year (2023) No Project scenario are included in this section.

4.1 EXISTING ROADWAY NETWORK

Selected arterials that are located in the vicinity of the project corridor are described in this section. Items of note include existing geometry, pedestrian and bicycle facilities, speed limit, and adjacent land uses. The selected arterials are as follows:

E STREET

E Street is a two-lane roadway that runs north and south. Exclusive bus lanes run in each direction in the middle of the corridor within the boundaries of the study area. The posted speed limit is 30 miles per hour. The land use adjacent to the corridor is comprised primarily of businesses. There are no dedicated bicycle lanes on either side of the roadway and on-street parking is not permitted.

F STREET

F Street is a four-lane undivided roadway south of the corridor and turns into a one-lane undivided roadway north of the corridor within the study area. F Street runs north and south in the study area. The posted speed limit is 25 miles per hour. The land use around the corridor is made up of residential housing and an educational facility. There are no exclusive bicycle lanes and on-street parking is permitted along both sides of the roadway.

9TH STREET

9th Street is a four-lane undivided roadway that runs east and west within the boundaries of the study location. The posted speed limit is 40 miles per hour. The land use surrounding the corridor is comprised of residential housing and businesses. Bicycle lanes are not present and on-street parking is permitted on both sides of the roadway.

8TH STREET

8th Street is a two-lane undivided roadway that runs east and west within the study area location. The posted speed limit is 25 miles per hour. The land use adjacent to the corridor is made up of predominantly residential housing. Dedicated bicycle lanes are not present and on-street parking is permitted on both sides of the corridor.

6TH STREET

6th Street is a four-lane undivided roadway that runs east and west within the boundaries of the study location. The posted speed limit is 35 miles per hour. The land use around the corridor is comprised of businesses and an educational facility. There are no bicycle lanes on either side of the corridor and on-street parking is permitted.

5TH STREET

5th Street is a four-lane undivided roadway that runs east and west within the study area. The posted speed limit is 40 miles per hour. The land use adjacent to the roadway includes mainly businesses. Bicycle lanes are not present and on-street parking is allowed on both sides of the roadway.

4.2 AVERAGE DAILY TRAFFIC

The average traffic volumes for the roadway segments for the Existing Year (2023) No Project scenario are summarized in Table 4.1. Road segment volumes have been included for noise and air quality purposes. Existing road segment volumes are extracted from 24-hour counts which can be found in Appendix B.

TABLE 4.1: EXISTING YEAR (2023) NO PROJECT ROADWAY SEGMENT DATA COLLECTION SUMMARY

ID	ROADWAY	SOURCE	EXISTING (2023)	CAPACITY	V/C	LOS
1	9th Street between H Street and E Street	Counts Unlimited, Jan 2023	11,157	31,100	0.36	A
2	E Street between 9th Street and 5th Street	Counts Unlimited, Jan 2023	5,586	14,600	0.38	A
3	5th Street between H Street and E Street	Counts Unlimited, Jan 2023	21,855	31,100	0.70	C

4.3 INTERSECTION LEVEL OF SERVICE

Study intersection lane geometry is shown in Figure 4.1. Existing Year (2023) No Project peak hour turning movement volumes are shown in Figure 4.2. Table 4.2 summarizes the existing levels of service at the study area intersections. All eight study intersections currently operate at an acceptable level of service during both peak hours.

TABLE 4.2: EXISTING YEAR (2023) NO PROJECT INTERSECTION LOS

INTERSECTION		Intersection Control	AM		PM	
			Delay (S)	LOS	Delay (S)	LOS
1	E St and 9th St	Signalized	26.7	C	27.4	C
2	E St and 8th St	Signalized	5.6	A	8.0	A
3	E St and 6th St	Signalized	15.6	B	14.9	B
4	E St and 5th St	Signalized	19.4	B	22.4	C
5	F St and 9th St	Signalized	9.8	A	10.0	B
6	F St and 8th St	TWSC	10.4	B	10.0	B
7	F St and 6th St	Signalized	9.3	A	9.2	A
8	F St and 5th St	Signalized	21.3	C	20.1	C

FIGURE 4.1. STUDY INTERSECTION LANE GEOMETRY

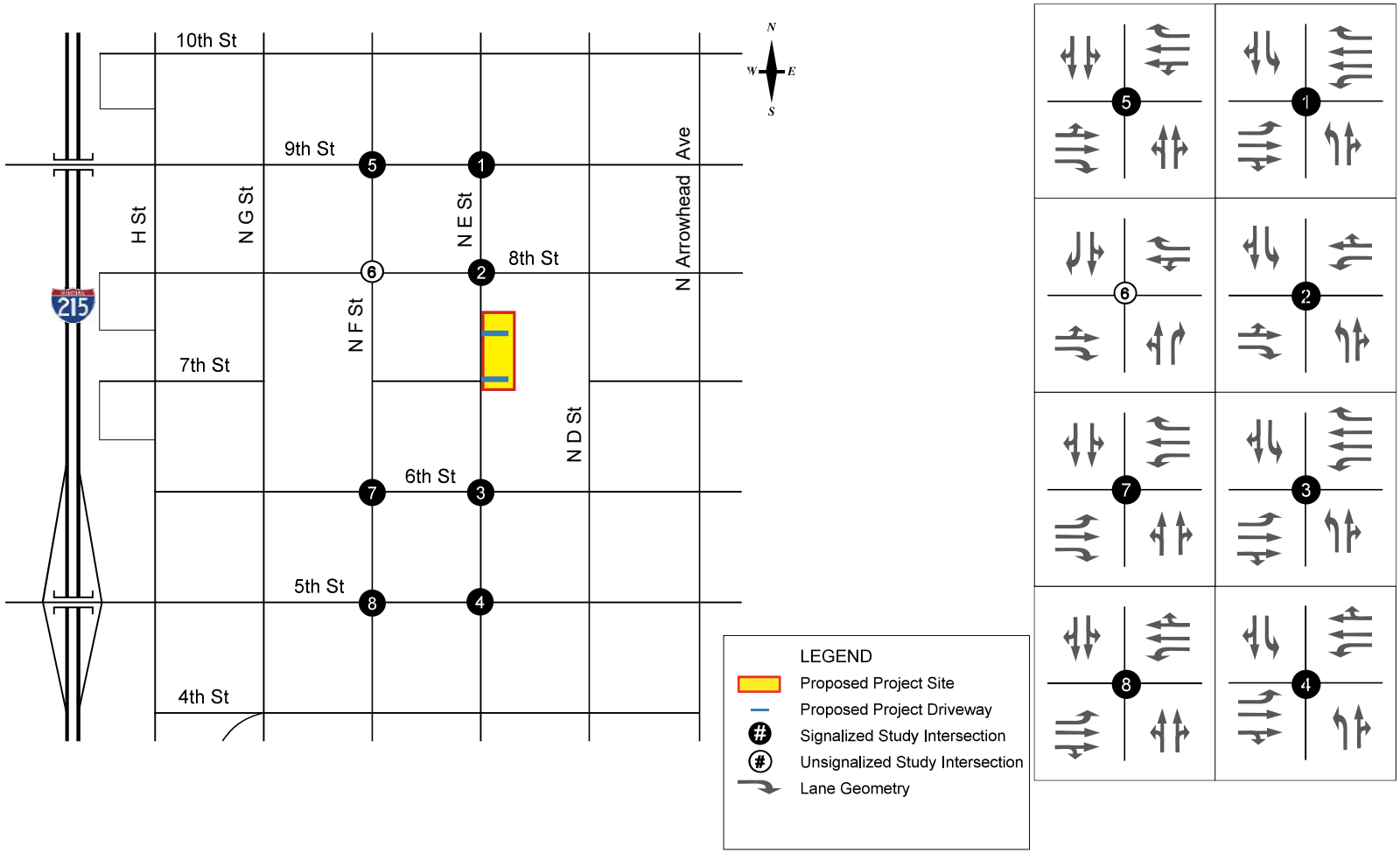

FIGURE 4.2 EXISTING YEAR (2023) NO PROJECT VOLUMES

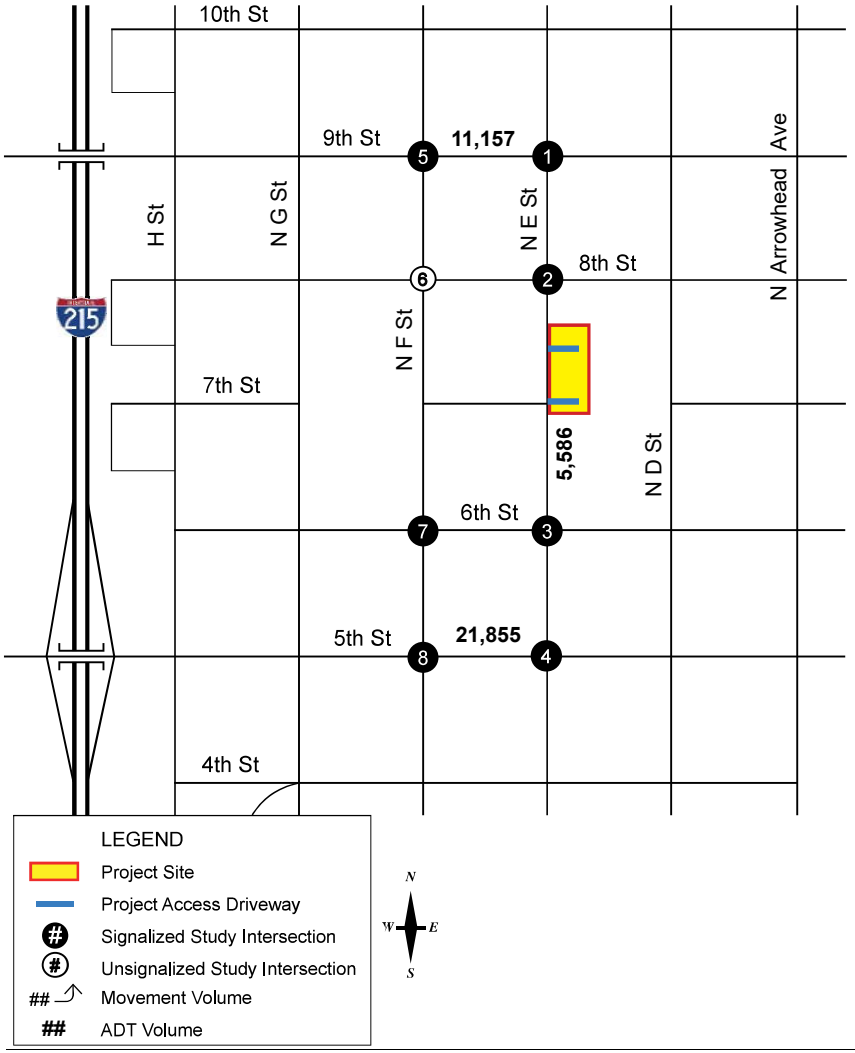

AM Peak Hour

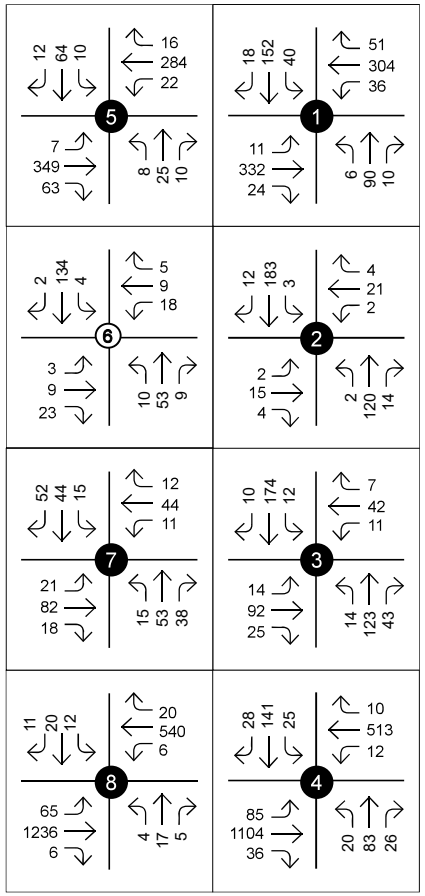

PM Peak Hour

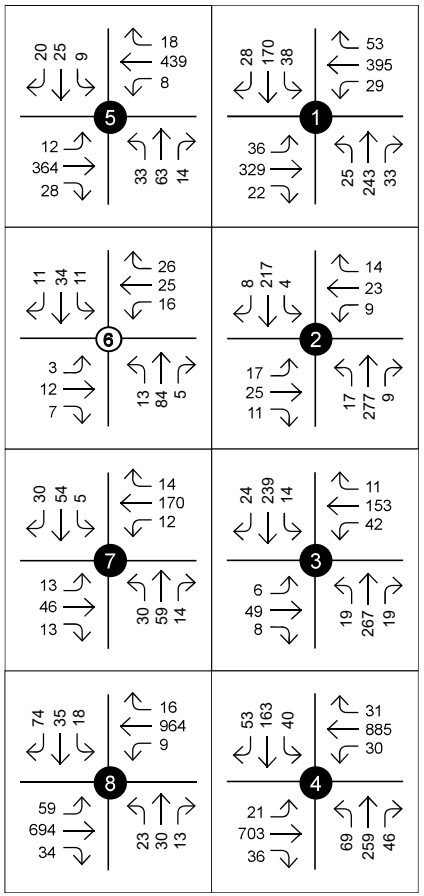

5 OPENING YEAR (2024) NO PROJECT

This section presents the ADT, peak hour link analysis, and intersection LOS analysis for the Opening Year (2024) No Project scenario. Associated lane geometries and controls are consistent with the Existing Year (2023) No Project intersection geometries and controls as described in Section 4.

5.1 AVERAGE DAILY TRAFFIC

The average daily traffic for study segments in the Opening Year (2024) No Project scenario are presented in Table 5.1. A growth factor of 6% (3% per year over two years) was applied to 2023 count data to estimate 2024 volumes. Road segment volumes have been included for noise and air quality purposes.

TABLE 5.1: OPENING YEAR (2024) NO PROJECT ROADWAY SEGMENT SUMMARY

ID	ROADWAY	OPENING (2024)	CAPACITY	V/C	LOS
1	9th Street between H Street and E Street	11,826	31,100	0.38	A
2	E Street between 9th Street and 5th Street	5,921	14,600	0.41	A
3	5th Street between H Street and E Street	23,166	31,100	0.74	C

5.2 INTERSECTION LEVEL OF SERVICE

The Opening Year (2024) peak hour turning movement volumes are shown in Figure 5.1. A summary of the AM and PM peak hour intersection level of service analysis is presented in Table 5.2. All eight study intersections operate at acceptable level of service in this scenario.

TABLE 5.2: OPENING YEAR (2024) NO PROJECT INTERSECTION LEVEL OF SERVICE

INTERSECTION		Intersection Control	AM		PM	
			Delay (S)	LOS	Delay (S)	LOS
1	E St and 9th St	Signalized	27.2	C	28.3	C
2	E St and 8th St	Signalized	6.0	A	8.3	A
3	E St and 6th St	Signalized	15.8	B	14.9	B
4	E St and 5th St	Signalized	20.2	C	22.6	C
5	F St and 9th St	Signalized	9.8	A	10.1	B
6	F St and 8th St	TWSC	10.6	B	10.2	B
7	F St and 6th St	Signalized	9.3	A	9.3	A
8	F St and 5th St	Signalized	20.7	C	19.0	B

FIGURE 5.1 OPENING YEAR (2024) NO PROJECT VOLUMES

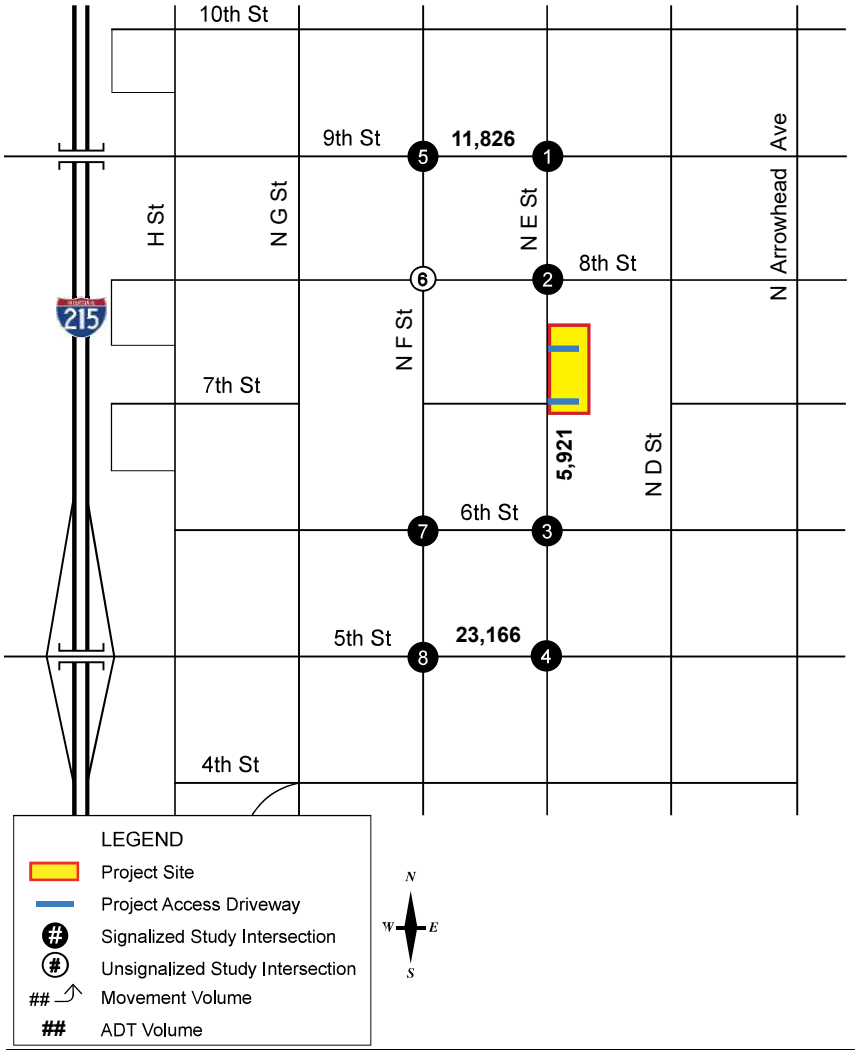

AM Peak Hour

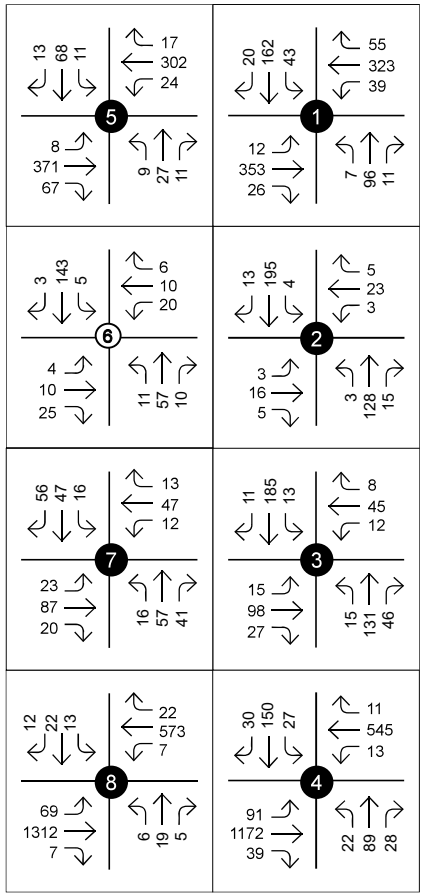

PM Peak Hour

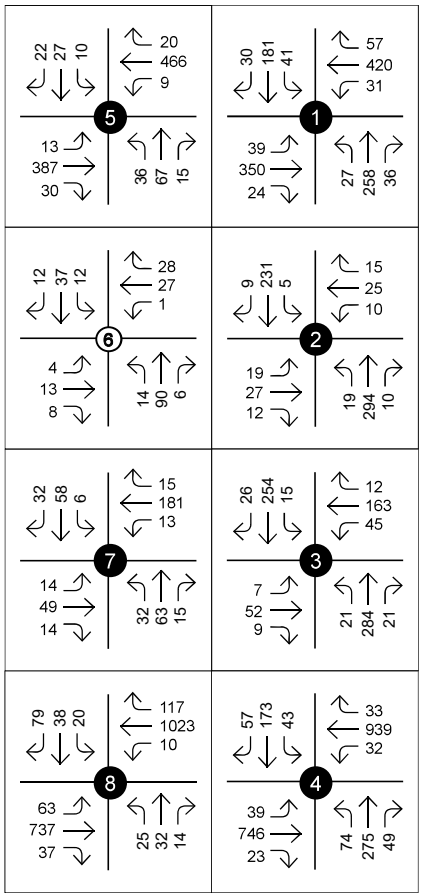

6 BUILD OUT YEAR (2040) NO PROJECT

This section presents the ADT, peak hour link analysis, and intersection LOS analysis for the Build Out Year (2040) No Project scenario. Associated lane geometries and controls are consistent with the Existing Year (2023) No Project intersection geometries and controls as described in Section 4.

6.1 AVERAGE DAILY TRAFFIC

The average daily traffic for study segments in the Build Out (2040) No Project scenario are presented in Table 6.1. Road segment volumes have been included for noise and air quality purposes.

TABLE 6.1: BUILD OUT YEAR (2040) NO PROJECT ROADWAY SEGMENT SUMMARY

ID	ROADWAY	BUILDOUT (2040)	V/C	LOS
1	9th Street between H Street and E Street	12,219	0.39	A
2	E Street between 9th Street and 5th Street	6,119	0.42	A
3	5th Street between H Street and E Street	23,934	0.77	C

6.2 INTERSECTION LEVEL OF SERVICE

The peak hour turning movement volumes presented in Figure 6.1 and 6.2 were utilized to assess intersection performance. Intersection performance was determined using the methods outlined in Section 3. A summary of the AM and PM peak hour intersection level of service analysis results for the Build Out (2040) No Project scenario is presented in Table 6.2. All intersections are operating at acceptable level of service except for the intersection at E Street and 5th Street in the AM peak hour.

TABLE 6.2: BUILD OUT (2040) NO PROJECT INTERSECTION LEVEL OF SERVICE

INTERSECTION		Intersection Control	AM		PM	
			Delay (S)	LOS	Delay (S)	LOS
1	E St and 9th St	Signalized	30.1	C	38.1	D
2	E St and 8th St	Signalized	6.9	A	9.1	A
3	E St and 6th St	Signalized	15.9	B	14.7	B
4	E St and 5th St	Signalized	59.8	E	31.5	C
5	F St and 9th St	Signalized	10.3	B	10.7	B
6	F St and 8th St	TWSC	11.9	B	11.3	B
7	F St and 6th St	Signalized	9.6	A	9.6	A
8	F St and 5th St	Signalized	19.3	B	13.9	B

FIGURE 6.1 BUILD OUT YEAR (2040) NO PROJECT VOLUMES

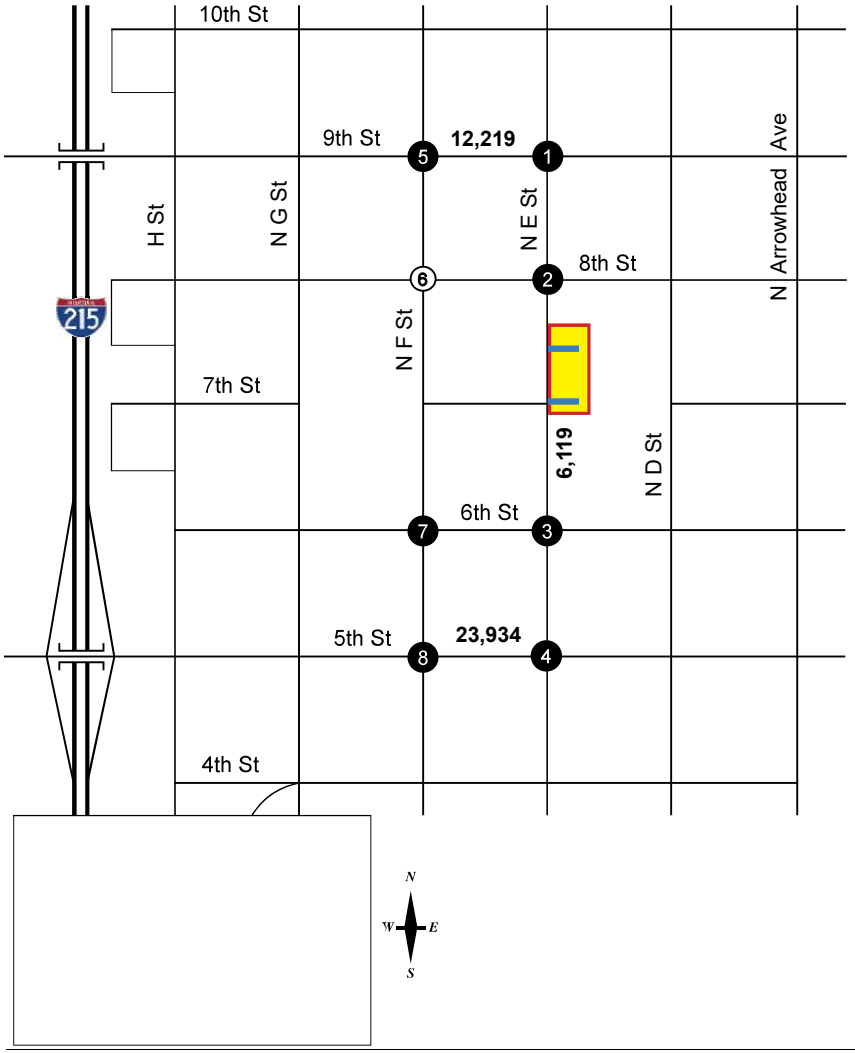

AM Peak Hour

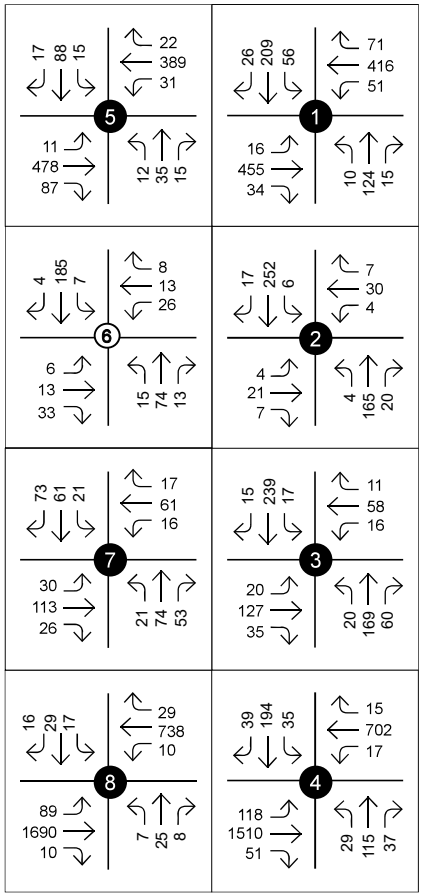

PM Peak Hour

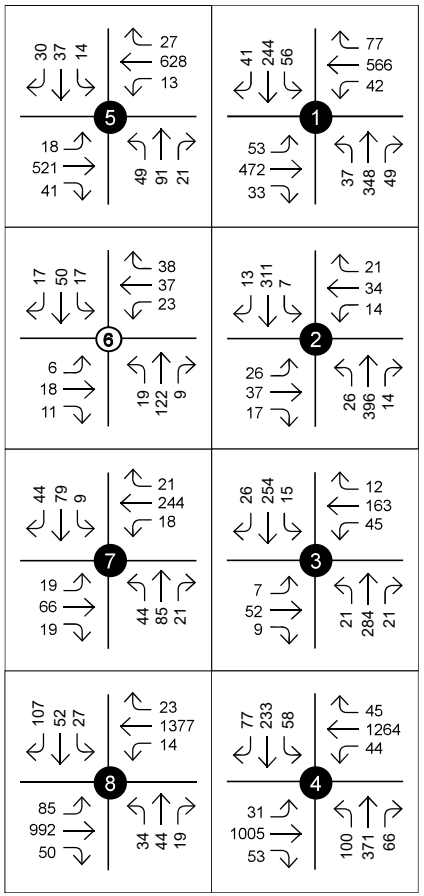

7 PROJECT TRAFFIC

A description of the methods utilized to generate, distribute, and assign project-generated traffic to intersections within the study area are presented in this section.

7.1 TRIP GENERATION

The project is proposed to include 16,800 square feet of office space. Some departments that will utilize the new building are currently housed adjacent to the proposed site at the Juanita Blakely Jones Elementary School and Board of Education. Due to the close proximity, the trip generation for these departments are not included as new project trips. Instead, the new project trips for this study include departments being relocated from areas within San Bernardino that are not within a half-mile radius of the proposed site and new proposed departments (23 relocated employees and 10 new employees, and up to 12 high-school aged students that will attend a new cadet program). *ITE Trip General Manual (11th Edition)* was used to develop trip generation for School District Office and High School Land uses. Trip generation for the School District Office land use was based on the number of new employees commuting to the area (33 employees). For the employees, the project is expected to generate 168 net daily trips, with 28 trips (21 inbound and 7 outbound) during the AM peak hour and 24 trips (4 inbound and 20 outbound) during the PM peak hour. Trip generation for High School Students was based on the number of students (12 students) attending the cadet program. For the students, the project is expected to generate 24 net daily trips, with 6 trips (4 inbound and 2 outbound) during the AM peak hour and 2 trips (1 inbound and 1 outbound) during the PM peak hour.

The proposed police station will house the existing police station located at 536 West Baseline Street. As such, trip generation for the proposed site was based on existing trips generated at the current police station location. Driveway counts were taken for 24 hours on Wednesday, May 9, 2018. The morning peak period (7:00 AM to 9:00 AM) and the afternoon peak period (4:00 PM to 6:00 PM) were used to estimate the peak hour trip generation for the proposed police station. The driveway counts referenced can be found in Appendix C. Table 7.1 presents the resultant AM and PM peak hour trip generation for the proposed project.

TABLE 7.1: PROJECT TRIP GENERATION RATES

Land Use	Units	Daily	AM Peak Hour			PM Peak Hour		
			In	Out	Total	In	Out	Total
Rates								
School District Office (528)	Employees	5.08	0.63	0.20	0.83	0.12	0.60	0.72
High School (525)	Students	1.94	0.35	0.17	0.52	0.07	0.07	0.14
Trips								
School District Office (528)	33	168	21	7	28	4	20	24
High School (525)	12	24	4	2	6	1	1	2
Driveway Counts	Trips	149	21	23	44	17	13	30
Total Trip Generation		341	46	32	78	22	34	56

Source: ITE Trip Generation Manual (11th Edition); Observed Driveway Counts

7.2 TRIP DISTRIBUTION

The proposed project site would utilize access driveways located on the east side of North E Street. North E Street is a north-south roadway with center bus lanes (one lane in each direction divided by flexible bollards) and one general travel lane in each direction. The bus lanes and bollards preclude all movements except for northbound right turns into the driveway and right turns out of the driveway onto northbound North E Street. Figure 7.1 illustrates the local trip distribution. Figure 7.2 presents the AM peak hour and PM peak hour turning movement volumes.

FIGURE 7.1. PROJECT TRIP DISTRIBUTION

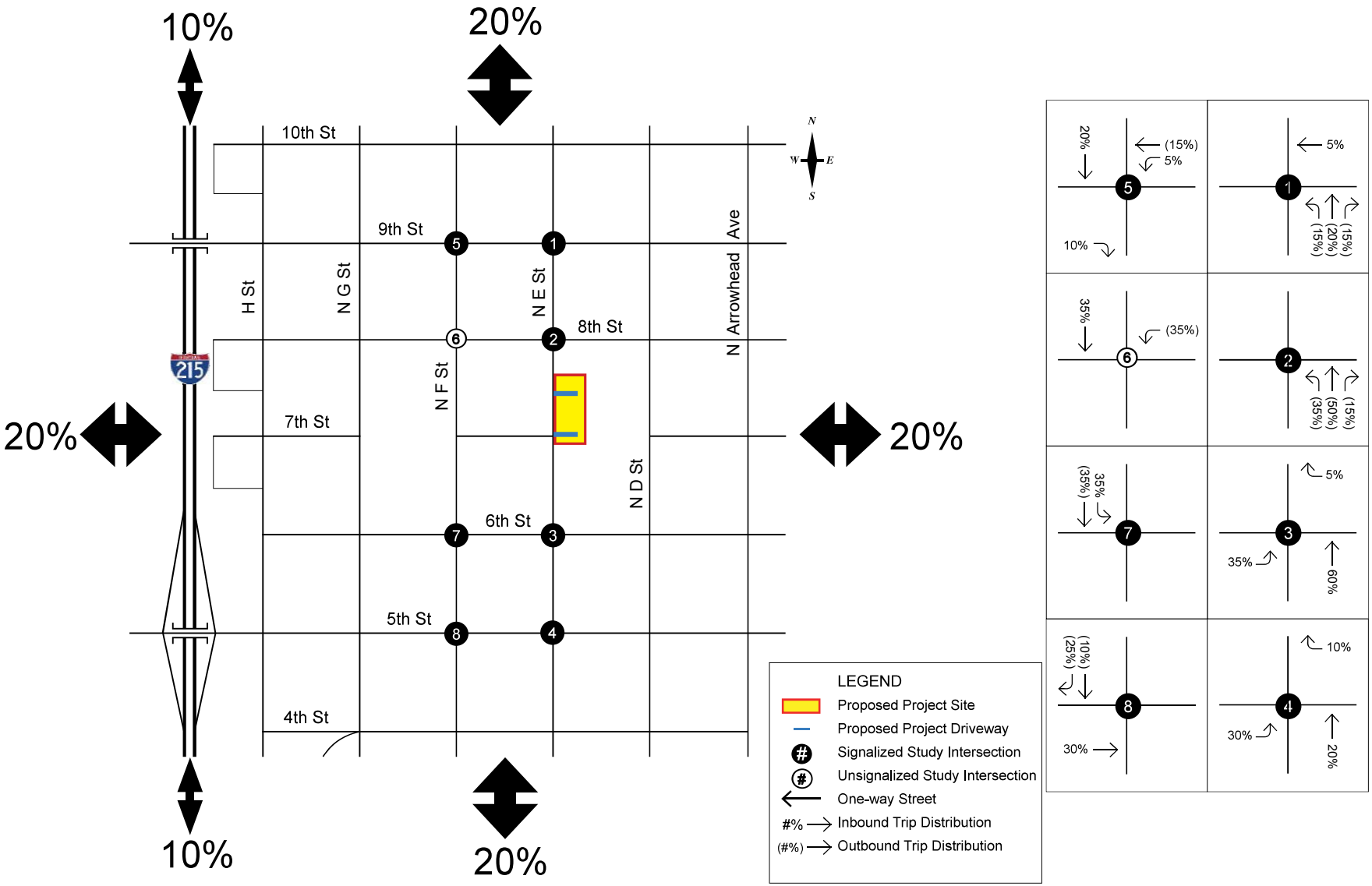

FIGURE 7.2 PROJECT TRIPS

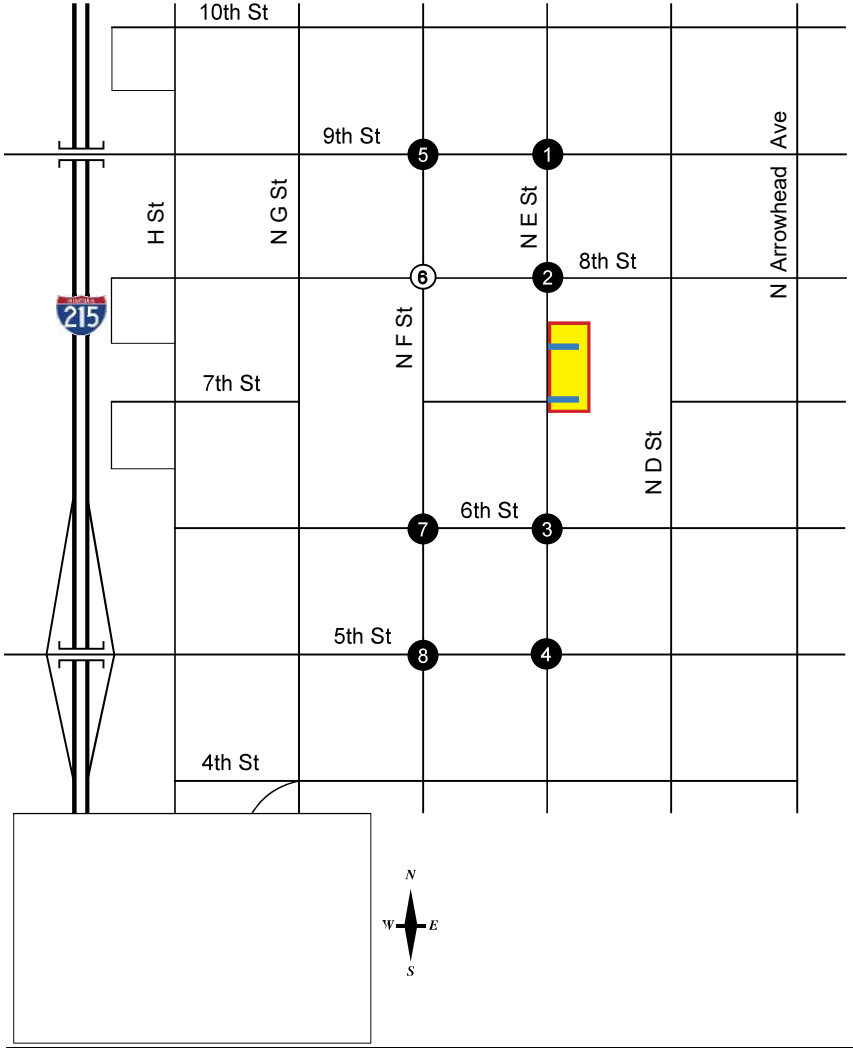

AM Peak Hour

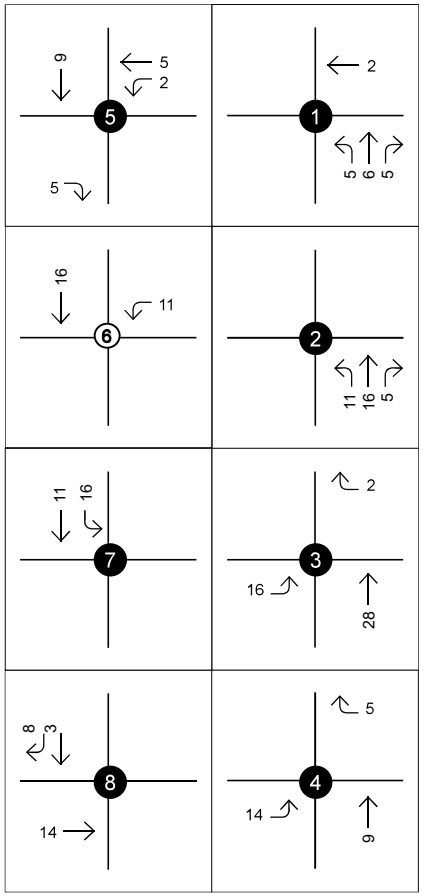

PM Peak Hour

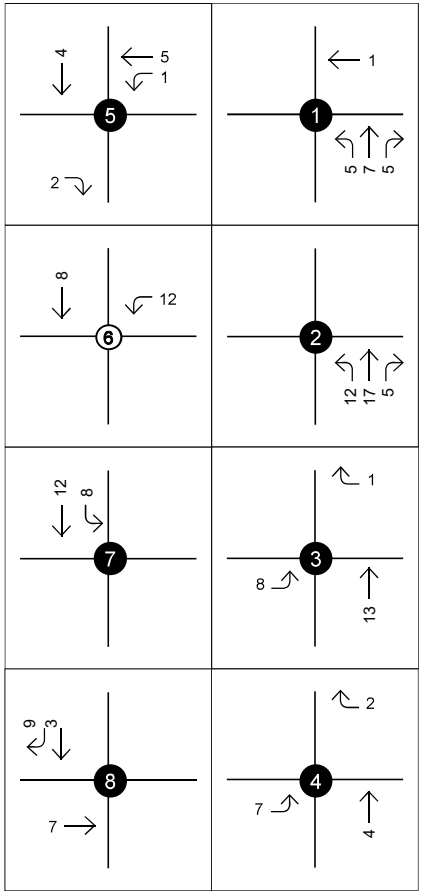

8 EXISTING YEAR (2023) WITH PROJECT

This section includes an analysis of the Existing Year (2023) With Project scenario. Results for the average daily traffic and intersection level of service for the Existing Year (2023) With Project scenario are presented in this section.

8.1 AVERAGE DAILY TRAFFIC

The average daily traffic for selected links generated by the project as well as in the Existing Year (2023) No Project and Existing Year (2023) With Project scenarios are presented in Table 8.1 below. Road segment volumes have been included for noise and air quality purposes. All study roadway segments operate at an acceptable level of service with the proposed project.

TABLE 8.1: EXISTING YEAR (2023) WITH PROJECT ROADWAY SEGMENT SUMMARY

ID	ROADWAY	SOURCE	EXISTING NP ADT	V/C	LOS	EXISTING WP ADT	V/C	LOS
1	9th Street between H Street and E Street	Counts Unlimited, Jan 2023	11,157	0.36	A	11,192	0.36	A
2	E Street between 9th Street and 5th Street	Counts Unlimited, Jan 2023	5,586	0.38	A	5,757	0.39	A
3	5th Street between H Street and E Street	Counts Unlimited, Jan 2023	21,855	0.70	C	21,906	0.70	C

8.2 INTERSECTION LEVEL OF SERVICE

The peak hour turning movement volumes presented in Figure 8.1 were utilized in order to assess intersection performance. A summary of the AM and PM peak hour intersection level of service analysis results for the Existing Year (2023) With Project scenario is presented in Table 8.2 for the AM peak hour and Table 8.3 for PM peak hour. All eight intersections operate at an acceptable level of service in both the No Project and With Project scenarios.

TABLE 8.2: EXISTING YEAR (2023) AM PEAK HOUR WITH PROJECT INTERSECTION LOS

INTERSECTION		Intersection Control	EXISTING		W/ PROJECT		Change in Delay
			Delay (S)	LOS	Delay (S)	LOS	
1	E St and 9th St	Signalized	26.7	C	26.7	C	0.000
2	E St and 8th St	Signalized	5.6	A	6.1	A	0.500
3	E St and 6th St	Signalized	15.6	B	15.7	B	0.100
4	E St and 5th St	Signalized	19.4	B	19.3	B	-0.100
5	F St and 9th St	Signalized	9.8	A	9.8	A	0.000
6	F St and 8th St	TWSC	10.4	B	10.7	B	0.300
7	F St and 6th St	Signalized	9.3	A	9.4	A	0.100
8	F St and 5th St	Signalized	21.3	C	21.1	C	-0.200

TABLE 8.3: EXISTING YEAR (2023) PM PEAK HOUR WITH PROJECT INTERSECTION LOS

INTERSECTION		Intersection Control	EXISTING		W/ PROJECT		Change in Delay
			Delay (S)	LOS	Delay (S)	LOS	
1	E St and 9th St	Signalized	27.4	C	27.5	C	0.100
2	E St and 8th St	Signalized	8.0	A	8.3	A	0.300
3	E St and 6th St	Signalized	14.9	B	14.9	B	0.000
4	E St and 5th St	Signalized	22.4	C	21.9	C	-0.500
5	F St and 9th St	Signalized	10.0	B	10.0	B	0.000
6	F St and 8th St	TWSC	10.0	B	10.2	B	0.200
7	F St and 6th St	Signalized	9.2	A	9.3	A	0.100
8	F St and 5th St	Signalized	20.1	C	20.0	C	-0.100

FIGURE 8.1 EXISTING YEAR (2023) WITH PROJECT VOLUMES

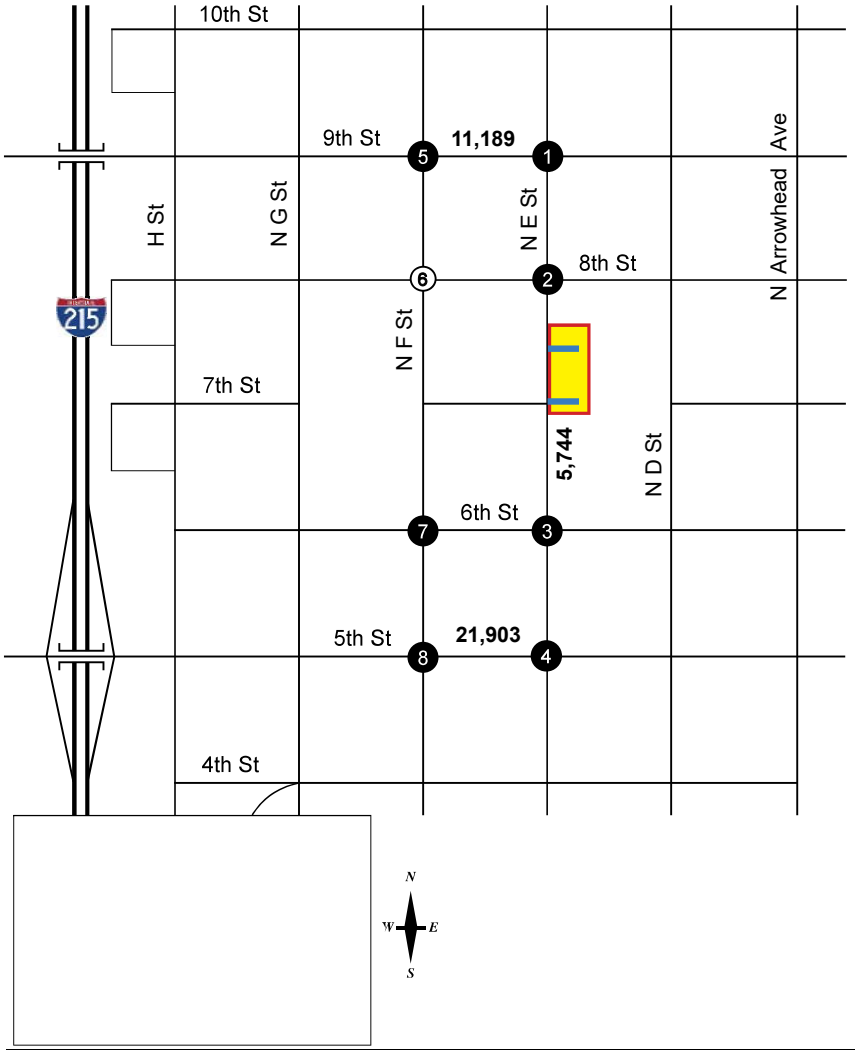

AM Peak Hour

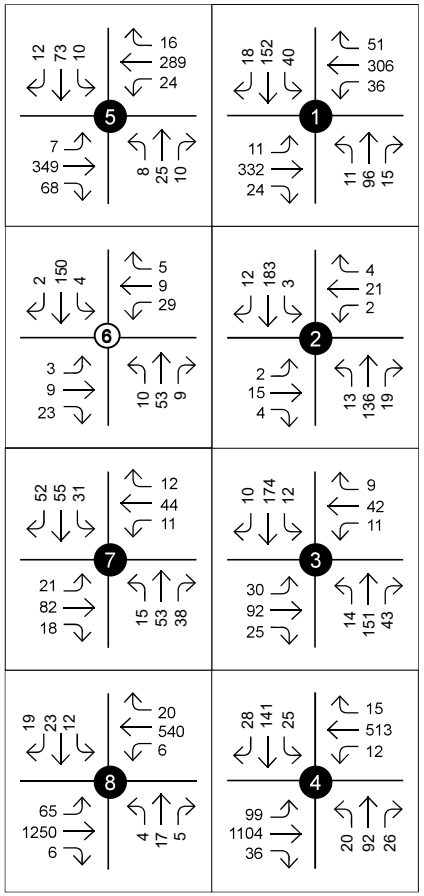

PM Peak Hour

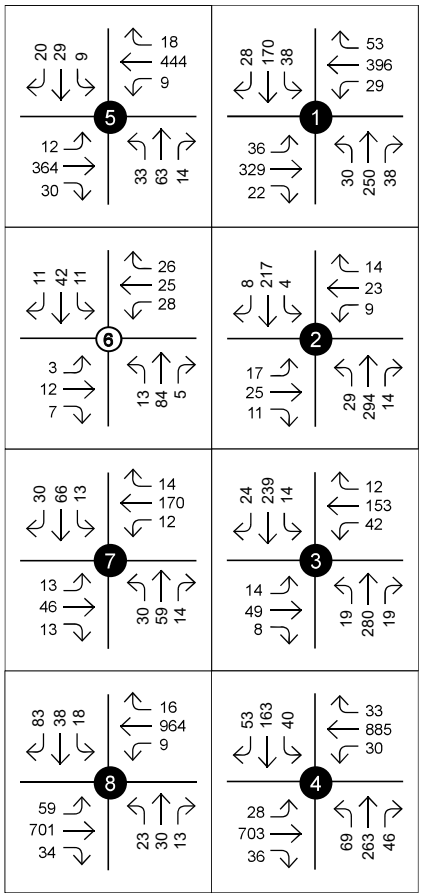

9 OPENING YEAR (2024) WITH PROJECT

This section presents the ADT and intersection LOS analysis for the Opening Year (2024) With Project scenario. Associated lane geometries and controls are consistent with the Existing Condition.

9.1 AVERAGE DAILY TRAFFIC

The average daily traffic for selected links generated by the project as well as in the Opening Year (2024) No Project and Opening Year (2024) With Project scenarios are presented in Table 9.1. Road segment volumes have been included for noise and air quality purposes. All study segments are forecast to operate at an acceptable level of service with the proposed project in the Opening Year.

TABLE 9.1: OPENING YEAR (2024) WITH PROJECT ROADWAY SEGMENT SUMMARY

ID	ROADWAY	SOURCE	OPENING NP ADT	V/C	LOS	OPENING WP ADT	V/C	LOS
1	9th Street between H Street and E Street	Counts Unlimited, Jan 2023	11,492	0.37	A	11,861	0.38	A
2	E Street between 9th Street and 5th Street	Counts Unlimited, Jan 2023	5,754	0.39	A	6,092	0.42	A
3	5th Street between H Street and E Street	Counts Unlimited, Jan 2023	22,511	0.72	C	23,217	0.75	C

9.2 INTERSECTION LEVEL OF SERVICE

The peak hour turning movement volumes presented in Figure 9.1 and 9.2 were utilized to assess intersection performance. A summary of the AM and PM peak hour intersection level of service analysis results for the Opening Year (2024) With Project condition is presented in Table 9.2 for the AM peak hour and Table 9.3 for the PM peak hour. All eight intersections operate at an acceptable level of service in both the No Project and With Project scenarios.

TABLE 9.2: OPENING YEAR (2024) AM PEAK HOUR WITH PROJECT INTERSECTION LOS

INTERSECTION		Intersection Control	NO PROJECT		W/ PROJECT		Change in Delay
			Delay (S)	LOS	Delay (S)	LOS	
1	E St and 9th St	Signalized	27.2	C	27.2	C	0.000
2	E St and 8th St	Signalized	6.0	A	6.4	A	0.400
3	E St and 6th St	Signalized	15.8	B	15.9	B	0.100
4	E St and 5th St	Signalized	20.2	C	20.1	C	-0.100
5	F St and 9th St	Signalized	9.8	A	9.9	A	0.100
6	F St and 8th St	TWSC	10.6	B	10.9	B	0.300
7	F St and 6th St	Signalized	9.3	A	9.4	A	0.100
8	F St and 5th St	Signalized	20.7	C	20.6	C	-0.100

TABLE 9.3: OPENING YEAR (2024) PM PEAK HOUR WITH PROJECT INTERSECTION LOS

INTERSECTION		Intersection Control	NO PROJECT		W/ PROJECT		Change in Delay
			Delay (S)	LOS	Delay (S)	LOS	
1	E St and 9th St	Signalized	28.3	C	28.4	C	0.100
2	E St and 8th St	Signalized	8.3	A	8.6	A	0.300
3	E St and 6th St	Signalized	14.9	B	14.9	B	0.000
4	E St and 5th St	Signalized	22.6	C	22.1	C	-0.500
5	F St and 9th St	Signalized	10.1	B	10.1	B	0.000
6	F St and 8th St	TWSC	10.2	B	10.4	B	0.200
7	F St and 6th St	Signalized	9.3	A	9.3	A	0.000
8	F St and 5th St	Signalized	19	B	19.0	B	0.000

FIGURE 9.1 OPENING YEAR (2024) WITH PROJECT VOLUMES

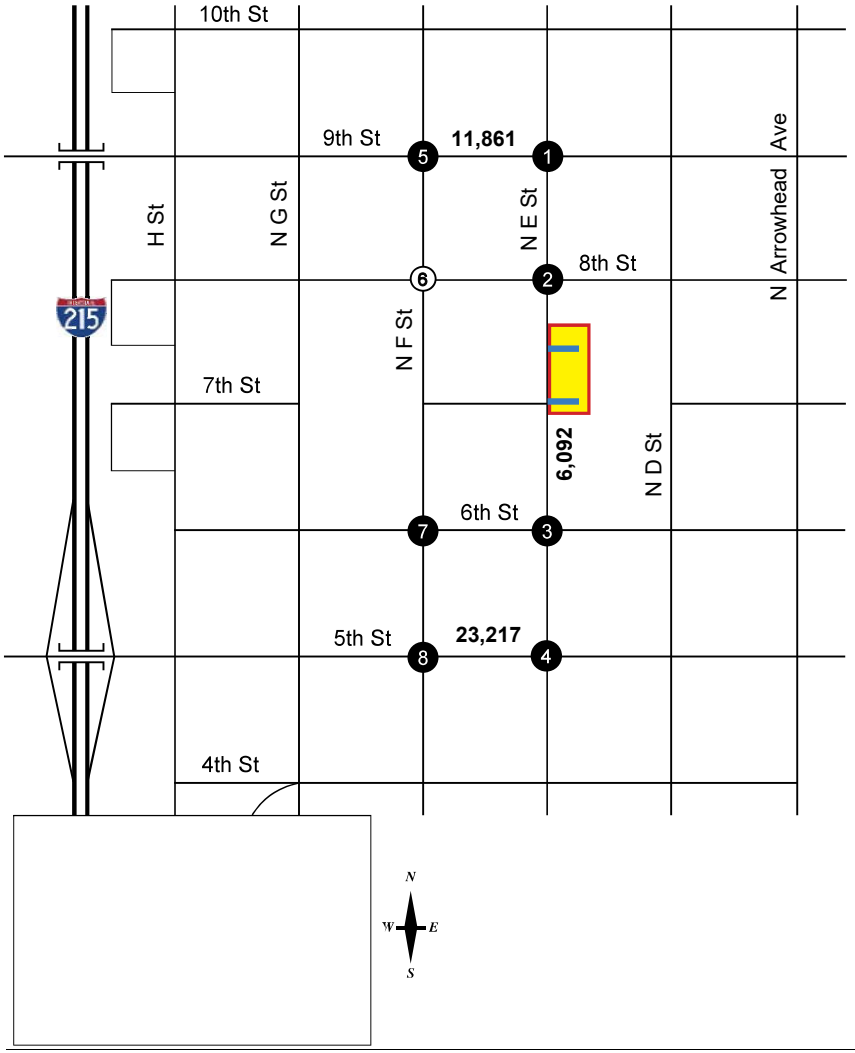

AM Peak Hour

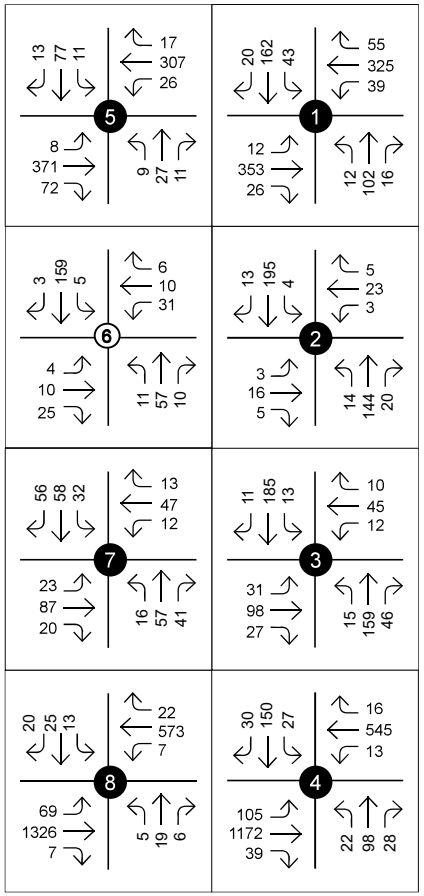

PM Peak Hour

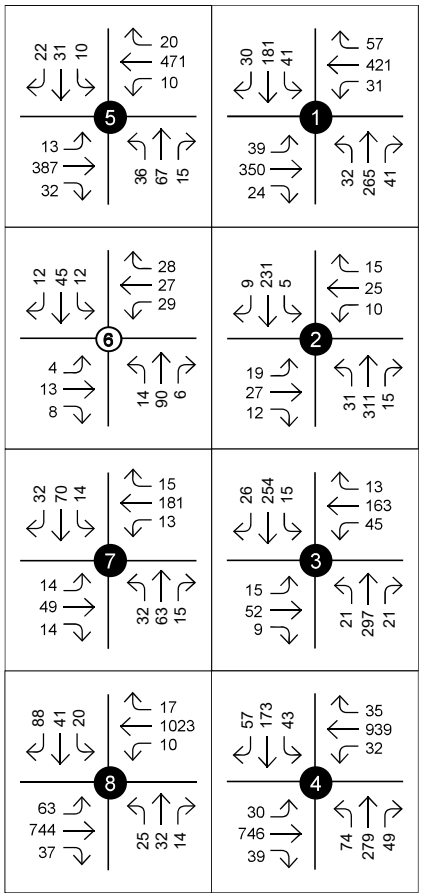

10 BUILD OUT YEAR (2040) WITH PROJECT

This section presents the ADT and intersection LOS analysis for the Build Out Year (2040) With Project scenario. Associated lane geometries and controls are consistent with those used in the Build Out Year (2040) No Project scenario.

10.1 AVERAGE DAILY TRAFFIC

The average daily traffic for selected links generated by the project as well as in the Build Out Year (2040) No Project and Build Out Year (2040) With Project scenarios are presented in Table 10.1. Road segment volumes have been included for noise and air quality purposes. All study roadway segments are forecast to operate at an acceptable level of service with the proposed project.

TABLE 10.1: OPENING YEAR (2024) WITH PROJECT ROADWAY SEGMENT SUMMARY

ID	ROADWAY	SOURCE	BUILD OUT NP ADT	V/C	LOS	BUILD OUT WP ADT	V/C	LOS
1	9th Street between H Street and E Street	Counts Unlimited, Jan 2023	12,219	0.39	A	12,254	0.39	A
2	E Street between 9th Street and 5th Street	Counts Unlimited, Jan 2023	6,119	0.42	A	6,290	0.43	A
3	5th Street between H Street and E Street	Counts Unlimited, Jan 2023	23,934	0.77	C	23,985	0.77	C

10.2 INTERSECTION LEVEL OF SERVICE

The peak hour turning movement volumes presented in Figure 10.1 and 10.2 were utilized to assess intersection performance. A summary of the AM and PM peak hour intersection level of service analysis results for the Build Out Year (2040) With Project condition is presented in Table 10.2 for the AM peak hour and Table 10.3 for the PM peak hour. All intersections except the intersection at E Street and 5th street operate at an acceptable level of service in the No Project Scenario. In the With Project Scenario, all eight intersections operate at an acceptable level of service.

TABLE 10.2: BUILD OUT YEAR (2040) AM PEAK HOUR WITH PROJECT INTERSECTION LOS

INTERSECTION		Intersection Control	NO PROJECT		W/ PROJECT		Change in Delay
			Delay (S)	LOS	Delay (S)	LOS	
1	E St and 9th St	Signalized	30.1	C	30.1	C	0.000
2	E St and 8th St	Signalized	6.6	A	6.9	A	0.300
3	E St and 6th St	Signalized	15.8	B	15.9	B	0.100
4	E St and 5th St	Signalized	60.2	E	59.8	E	-0.400
5	F St and 9th St	Signalized	10.3	B	10.3	B	0.000
6	F St and 8th St	TWSC	11.5	B	11.9	B	0.400
7	F St and 6th St	Signalized	9.5	A	9.6	A	0.100
8	F St and 5th St	Signalized	19.2	B	19.3	B	0.100

TABLE 10.3: BUILD OUT YEAR (2040) PM PEAK HOUR WITH PROJECT INTERSECTION LOS

INTERSECTION		Intersection Control	NO PROJECT		W/ PROJECT		Change in Delay
			Delay (S)	LOS	Delay (S)	LOS	
1	E St and 9th St	Signalized	37.2	D	38.1	D	0.900
2	E St and 8th St	Signalized	8.9	A	9.1	A	0.200
3	E St and 6th St	Signalized	14.7	B	14.7	B	0.000
4	E St and 5th St	Signalized	31.3	C	31.5	C	0.200
5	F St and 9th St	Signalized	10.7	B	10.7	B	0.000
6	F St and 8th St	TWSC	11	B	11.3	B	0.300
7	F St and 6th St	Signalized	9.6	A	9.6	A	0.000
8	F St and 5th St	Signalized	13.9	B	13.9	B	0.000

FIGURE 10.1 BUILD OUT YEAR (2040) WITH PROJECT VOLUMES

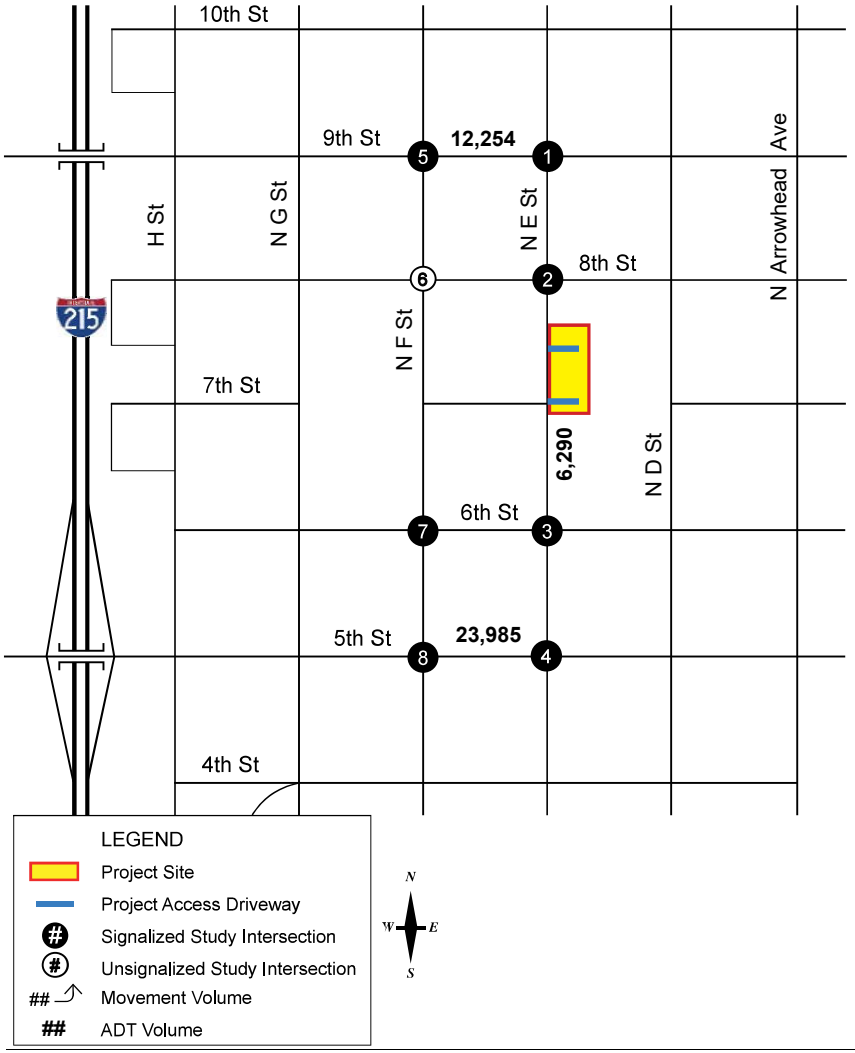

AM Peak Hour

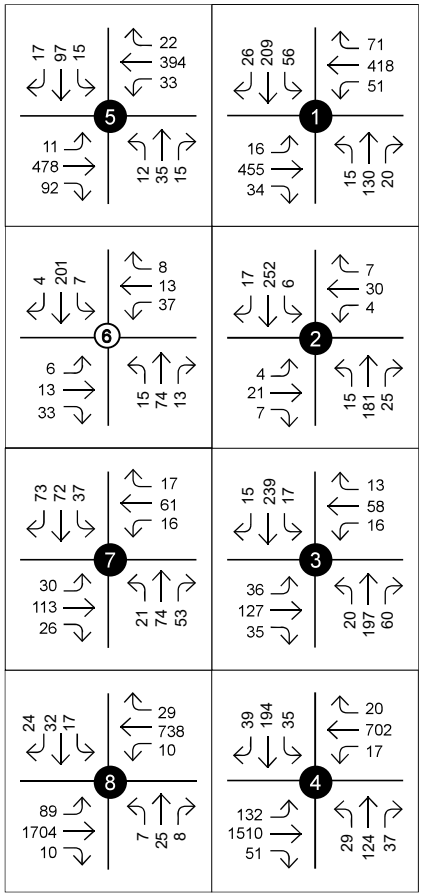

PM Peak Hour

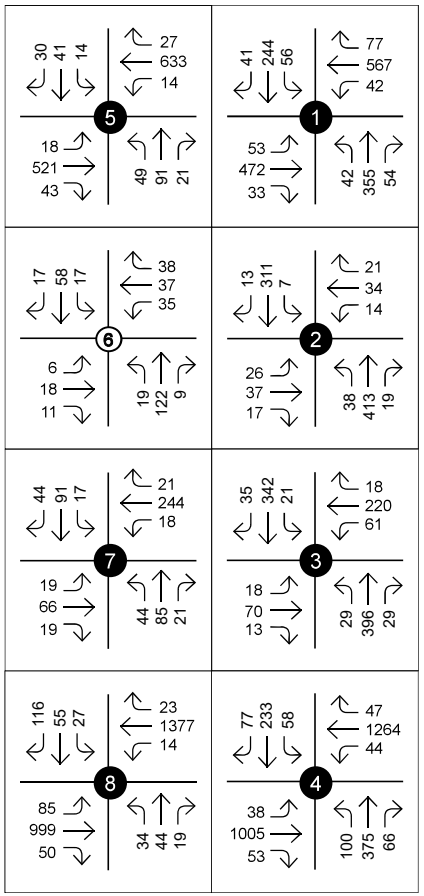

11 MITIGATION MEASURES

This section provides a summary of the mitigation process utilized for this project. The project is not expected to create any significant impacts, and no mitigation measures are required.

11.1 SIGNIFICANT IMPACT IDENTIFICATION

The City of San Bernardino Traffic Impact Study Guidelines identifies the significant impact threshold for signalized intersections using V/C ratios. Intersection Capacity Utilization (ICU) analysis was used to determine V/C ratios for each intersection. Table 11.1 shows the ICU results for Existing Year 2023, Table 11.2 shows the ICU results for Opening Year 2024, and Table 11.3 shows the ICU results for Build Out Year 2040. No significant impacts were identified because of the proposed project.

TABLE 11.1: Existing Year (2023) Intersection Capacity Utilization (ICU) Results Summary

Intersection		Control	AM Peak					PM					Sig Impact
			No Project		With Project		Change in V/C	No Project		With Project		Change in V/C	
			V/C	LOS	V/C	LOS		V/C	LOS	V/C	LOS		
1	E St & 9th St	Signal	0.410	A	0.411	A	0.001	0.610	B	0.618	B	0.008	No
2	E St & 8th St	Signal	0.261	A	0.267	A	0.006	0.318	A	0.425	A	0.107	No
3	E St & 6th St	Signal	0.274	A	0.283	A	0.009	0.331	A	0.359	A	0.028	No
4	E St & 5th St	Signal	0.691	B	0.691	B	0.000	0.619	B	0.621	B	0.002	No
5	F St & 9th St	Signal	0.477	A	0.494	A	0.017	0.422	A	0.423	A	0.001	No
6	F St & 8th St	2-Way Stop	0.250	A	0.270	A	0.020	0.248	A	0.278	A	0.030	No
7	F St & 6th St	Signal	0.637	B	0.637	B	0.000	0.637	B	0.637	B	0.000	No
8	F St & 5th St	Signal	0.697	B	0.697	B	0.000	0.653	B	0.653	B	0.000	No

TABLE 11.2: Opening Year (2024) Intersection Capacity Utilization (ICU) Results Summary

Intersection		Control	AM Peak					PM					Sig Impact
			No Project		With Project		Change in V/C	No Project		With Project		Change in V/C	
			V/C	LOS	V/C	LOS		V/C	LOS	V/C	LOS		
1	E St & 9th St	Signal	0.426	A	0.428	A	0.002	0.631	B	0.639	B	0.008	No
2	E St & 8th St	Signal	0.270	A	0.276	A	0.006	0.334	A	0.449	A	0.115	No
3	E St & 6th St	Signal	0.308	A	0.308	A	0.000	0.349	A	0.383	A	0.034	No
4	E St & 5th St	Signal	0.728	C	0.750	C	0.022	0.645	B	0.647	B	0.002	No
5	F St & 9th St	Signal	0.498	A	0.515	A	0.017	0.437	A	0.437	A	0.000	No
6	F St & 8th St	2-Way Stop	0.261	A	0.283	A	0.022	0.252	A	0.279	A	0.027	No
7	F St & 6th St	Signal	0.637	B	0.637	B	0.000	0.637	B	0.637	B	0.000	No
8	F St & 5th St	Signal	0.731	C	0.731	C	0.000	0.687	B	0.765	C	0.078	No

TABLE 11.3: Build Out Year (2040) Intersection Capacity Utilization (ICU) Results Summary

Intersection		Control	AM Peak					PM					Sig Impact
			No Project		With Project		Change in V/C	No Project		With Project		Change in V/C	
			V/C	LOS	V/C	LOS		V/C	LOS	V/C	LOS		
1	E St & 9th St	Signal	0.596	A	0.596	A	0.000	0.752	C	0.760	C	0.008	No
2	E St & 8th St	Signal	0.308	A	0.308	A	0.000	0.423	A	0.541	A	0.118	No
3	E St & 6th St	Signal	0.383	A	0.383	A	0.000	0.425	A	0.474	A	0.049	No
4	E St & 5th St	Signal	0.876	D	0.876	D	0.000	0.801	D	0.803	D	0.002	No
5	F St & 9th St	Signal	0.577	A	0.595	A	0.018	0.514	A	0.514	A	0.000	No
6	F St & 8th St	2-Way Stop	0.319	A	0.333	A	0.014	0.294	A	0.323	A	0.029	No
7	F St & 6th St	Signal	0.637	B	0.637	B	0.000	0.637	B	0.637	B	0.000	No
8	F St & 5th St	Signal	0.871	D	0.875	D	0.004	0.871	D	0.873	D	0.002	No

12 CONCLUSIONS

This traffic impact analysis has been prepared to document the existing and forecast traffic conditions within the study area with the development proposed. The purpose of this study was to identify potential impacts to the study area intersections and to formulate measures to mitigate those impacts. Based on the results of the level of service analysis and the intersection capacity utilization, there are no anticipated traffic impacts associated with the project.

13 APPENDICES

APPENDIX A – SITE PLAN & SCOPE OF STUDY

APPENDIX B – TRAFFIC COUNTS (INTERSECTION AND LINK VOLUMES)

APPENDIX C – POLICE STATION EXISTING COUNTS

APPENDIX D – HCM 2010 METHODOLOGY REPORTS

APPENDIX E – INTERSECTION CAPACITY UTILIZATION REPORTS

APPENDIX A

Site Plan & Scope of Study

0' 10' 20' 30' 40'

PROPOSED SITE PLAN

SBCUSD PUBLIC SAFETY BUILDING

SAN BERNARDINO CITY UNIFIED SCHOOL DISTRICT | RCA #1-78-13

100% SCHEMATIC DESIGN

APRIL, 2023

APPENDIX B

Traffic Counts (Intersection and Link Volumes)

Counts Unlimited, Inc.
PO Box 1178
Corona, CA 92878
(951)268-6268

City of San Bernardino
N/S: E Street
E/W: 9th Street
Weather: Clear

File Name : 01_SBC_E St_9th St AM
Site Code : 20223031
Start Date : 1/11/2023
Page No : 1

Groups Printed- Total Volume

	E Street Southbound				9th Street Westbound				E Street Northbound				9th Street Eastbound				
Start Time	Left	Thru	Right	App. Total	Left	Thru	Right	App. Total	Left	Thru	Right	App. Total	Left	Thru	Right	App. Total	Int. Total
07:00 AM	5	19	2	26	1	54	6	61	2	13	1	16	2	50	1	53	156
07:15 AM	8	30	4	42	5	83	8	96	1	15	2	18	7	59	1	67	223
07:30 AM	7	39	2	48	4	91	6	101	1	18	5	24	4	72	6	82	255
07:45 AM	15	48	3	66	7	81	16	104	2	16	4	22	2	102	9	113	305
Total	35	136	11	182	17	309	36	362	6	62	12	80	15	283	17	315	939
08:00 AM	8	37	7	52	8	57	15	80	2	22	1	25	4	79	4	87	244
08:15 AM	8	35	3	46	10	78	9	97	1	28	3	32	2	86	4	92	267
08:30 AM	9	32	5	46	11	88	11	110	1	24	2	27	3	65	7	75	258
08:45 AM	12	40	2	54	10	72	16	98	1	30	6	37	10	54	1	65	254
Total	37	144	17	198	39	295	51	385	5	104	12	121	19	284	16	319	1023
Grand Total	72	280	28	380	56	604	87	747	11	166	24	201	34	567	33	634	1962
Apprch %	18.9	73.7	7.4		7.5	80.9	11.6		5.5	82.6	11.9		5.4	89.4	5.2		
Total %	3.7	14.3	1.4	19.4	2.9	30.8	4.4	38.1	0.6	8.5	1.2	10.2	1.7	28.9	1.7	32.3	

	E Street Southbound				9th Street Westbound				E Street Northbound				9th Street Eastbound				
Start Time	Left	Thru	Right	App. Total	Left	Thru	Right	App. Total	Left	Thru	Right	App. Total	Left	Thru	Right	App. Total	Int. Total
Peak Hour Analysis From 07:00 AM to 08:45 AM - Peak 1 of 1																	
Peak Hour for Entire Intersection Begins at 07:45 AM																	
07:45 AM	**15**	**48**	3	**66**	7	81	**16**	104	**2**	16	**4**	22	2	**102**	**9**	**113**	**305**
08:00 AM	8	37	**7**	52	8	57	15	80	2	22	1	25	**4**	79	4	87	244
08:15 AM	8	35	3	46	10	78	9	97	1	**28**	3	**32**	2	86	4	92	267
08:30 AM	9	32	5	46	**11**	**88**	11	**110**	1	24	2	27	3	65	7	75	258
Total Volume	40	152	18	210	36	304	51	391	6	90	10	106	11	332	24	367	1074
% App. Total	19	72.4	8.6		9.2	77.7	13		5.7	84.9	9.4		3	90.5	6.5		
PHF	.667	.792	.643	.795	.818	.864	.797	.889	.750	.804	.625	.828	.688	.814	.667	.812	.880

Counts Unlimited, Inc.
PO Box 1178
Corona, CA 92878
(951)268-6268

City of San Bernardino
N/S: E Street
E/W: 9th Street
Weather: Clear

File Name : 01_SBC_E St_9th St AM
Site Code : 20223031
Start Date : 1/11/2023
Page No : 2

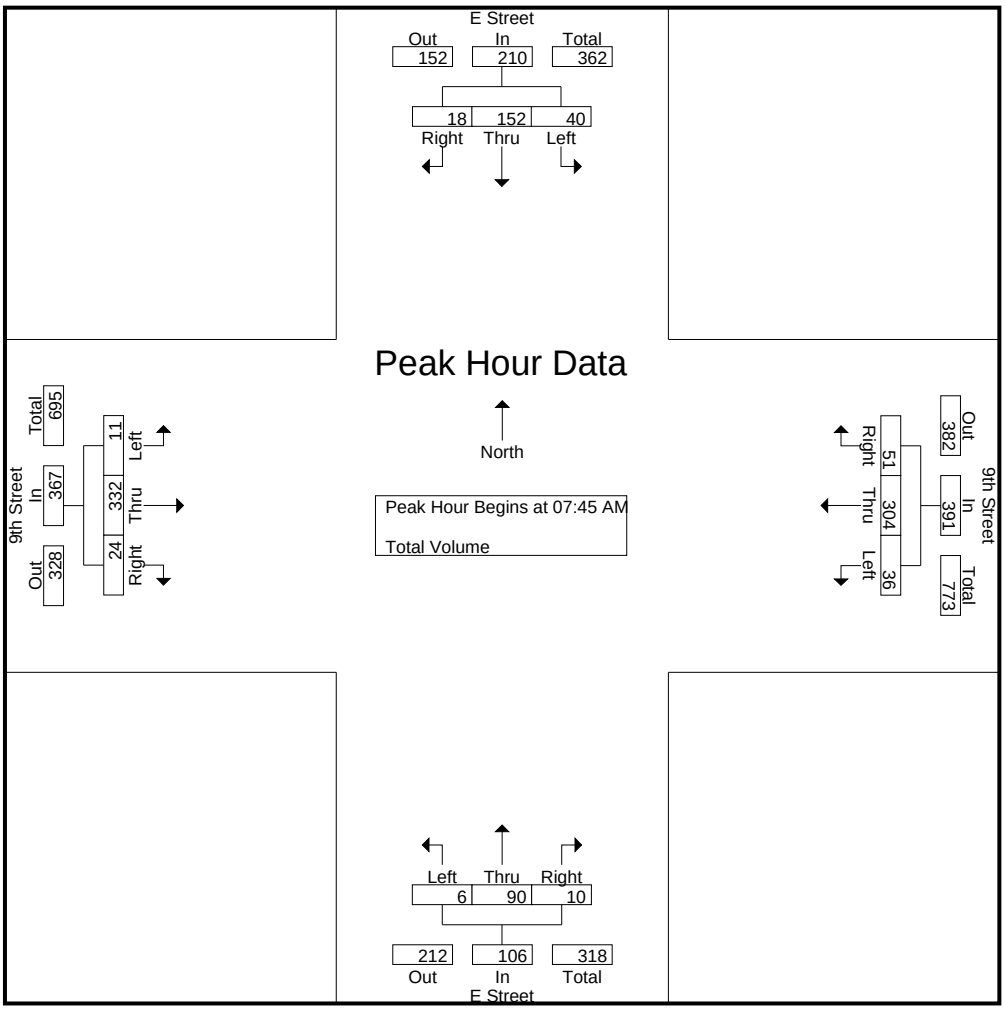

Peak Hour Analysis From 07:00 AM to 08:45 AM - Peak 1 of 1
Peak Hour for Each Approach Begins at:

	07:30 AM				07:45 AM				08:00 AM				07:30 AM			
+0 mins.	7	39	2	48	7	81	**16**	104	**2**	22	1	25	**4**	72	6	82
+15 mins.	**15**	**48**	3	**66**	8	57	15	80	1	28	3	32	2	**102**	**9**	**113**
+30 mins.	8	37	**7**	52	10	78	9	97	1	24	2	27	4	79	4	87
+45 mins.	8	35	3	46	**11**	**88**	11	**110**	1	**30**	**6**	**37**	2	86	4	92
Total Volume	38	159	15	212	36	304	51	391	5	104	12	121	12	339	23	374
% App. Total	17.9	75	7.1		9.2	77.7	13		4.1	86	9.9		3.2	90.6	6.1	
PHF	.633	.828	.536	.803	.818	.864	.797	.889	.625	.867	.500	.818	.750	.831	.639	.827

Counts Unlimited, Inc.
PO Box 1178
Corona, CA 92878
(951)268-6268

City of San Bernardino
N/S: E Street
E/W: 9th Street
Weather: Clear

File Name : 01_SBC_E St_9th St PM
Site Code : 20223031
Start Date : 1/11/2023
Page No : 1

Groups Printed- Total Volume

	E Street Southbound				9th Street Westbound				E Street Northbound				9th Street Eastbound				
Start Time	Left	Thru	Right	App. Total	Left	Thru	Right	App. Total	Left	Thru	Right	App. Total	Left	Thru	Right	App. Total	Int. Total
04:00 PM	9	57	3	69	8	100	13	121	3	59	7	69	8	68	10	86	345
04:15 PM	13	30	7	50	6	106	11	123	8	53	8	69	9	94	3	106	348
04:30 PM	8	40	11	59	8	98	13	119	7	63	11	81	6	87	3	96	355
04:45 PM	8	43	7	58	7	91	16	114	7	68	7	82	13	80	6	99	353
Total	38	170	28	236	29	395	53	477	25	243	33	301	36	329	22	387	1401
05:00 PM	4	41	5	50	8	117	7	132	5	65	10	80	2	76	4	82	344
05:15 PM	8	35	3	46	4	104	11	119	10	58	4	72	9	85	3	97	334
05:30 PM	8	25	7	40	7	89	16	112	10	66	6	82	5	75	1	81	315
05:45 PM	2	29	5	36	11	78	5	94	1	63	7	71	3	68	5	76	277
Total	22	130	20	172	30	388	39	457	26	252	27	305	19	304	13	336	1270
Grand Total	60	300	48	408	59	783	92	934	51	495	60	606	55	633	35	723	2671
Apprch %	14.7	73.5	11.8		6.3	83.8	9.9		8.4	81.7	9.9		7.6	87.6	4.8		
Total %	2.2	11.2	1.8	15.3	2.2	29.3	3.4	35	1.9	18.5	2.2	22.7	2.1	23.7	1.3	27.1	

	E Street Southbound				9th Street Westbound				E Street Northbound				9th Street Eastbound				
Start Time	Left	Thru	Right	App. Total	Left	Thru	Right	App. Total	Left	Thru	Right	App. Total	Left	Thru	Right	App. Total	Int. Total
Peak Hour Analysis From 04:00 PM to 05:45 PM - Peak 1 of 1																	
Peak Hour for Entire Intersection Begins at 04:00 PM																	
04:00 PM	9	**57**	3	**69**	**8**	100	13	121	3	59	7	69	8	68	**10**	86	345
04:15 PM	**13**	30	7	50	6	**106**	11	**123**	**8**	53	8	69	9	**94**	3	**106**	348
04:30 PM	8	40	**11**	59	8	98	13	119	7	63	**11**	81	6	87	3	96	**355**
04:45 PM	8	43	7	58	7	91	**16**	114	7	**68**	7	**82**	**13**	80	6	99	353
Total Volume	38	170	28	236	29	395	53	477	25	243	33	301	36	329	22	387	1401
% App. Total	16.1	72	11.9		6.1	82.8	11.1		8.3	80.7	11		9.3	85	5.7		
PHF	.731	.746	.636	.855	.906	.932	.828	.970	.781	.893	.750	.918	.692	.875	.550	.913	.987

Counts Unlimited, Inc.
PO Box 1178
Corona, CA 92878
(951)268-6268

City of San Bernardino
N/S: E Street
E/W: 9th Street
Weather: Clear

File Name : 01_SBC_E St_9th St PM
Site Code : 20223031
Start Date : 1/11/2023
Page No : 2

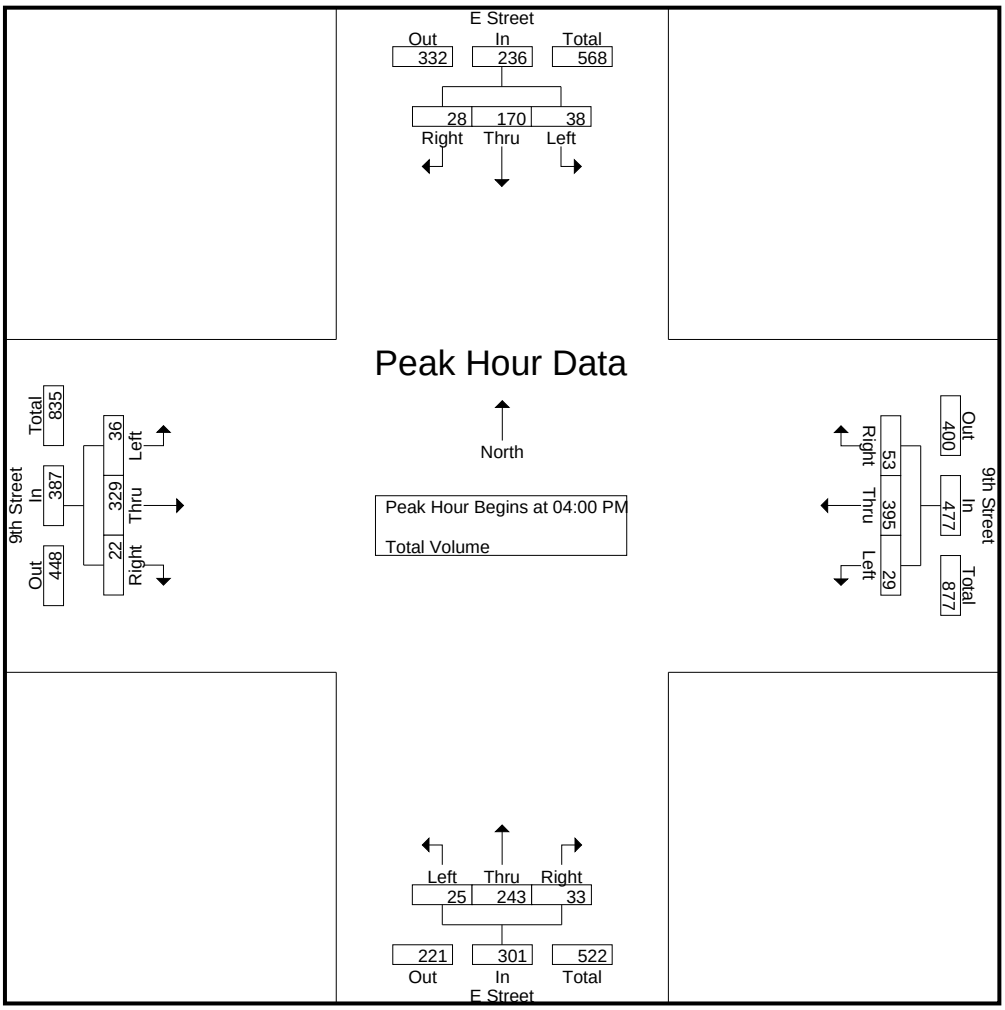

Peak Hour Analysis From 04:00 PM to 05:45 PM - Peak 1 of 1
Peak Hour for Each Approach Begins at:

	04:00 PM				04:15 PM				04:45 PM				04:00 PM			
+0 mins.	9	**57**	3	**69**	6	106	11	123	7	**68**	7	**82**	8	68	**10**	86
+15 mins.	**13**	30	7	50	**8**	98	13	119	5	65	**10**	80	9	**94**	3	**106**
+30 mins.	8	40	**11**	59	7	91	**16**	114	**10**	58	4	72	6	87	3	96
+45 mins.	8	43	7	58	8	**117**	7	**132**	10	66	6	82	**13**	80	6	99
Total Volume	38	170	28	236	29	412	47	488	32	257	27	316	36	329	22	387
% App. Total	16.1	72	11.9		5.9	84.4	9.6		10.1	81.3	8.5		9.3	85	5.7	
PHF	.731	.746	.636	.855	.906	.880	.734	.924	.800	.945	.675	.963	.692	.875	.550	.913

Counts Unlimited, Inc.
PO Box 1178
Corona, CA 92878
(951)268-6268

City of San Bernardino
N/S: E Street
E/W: 8th Street
Weather: Clear

File Name : 02_SBC_E St_8th St AM
Site Code : 20223031
Start Date : 1/11/2023
Page No : 1

Groups Printed- Total Volume

	E Street Southbound				8th Street Westbound				E Street Northbound				8th Street Eastbound				
Start Time	Left	Thru	Right	App. Total	Left	Thru	Right	App. Total	Left	Thru	Right	App. Total	Left	Thru	Right	App. Total	Int. Total
07:00 AM	0	19	1	20	1	1	1	3	0	17	1	18	0	4	0	4	45
07:15 AM	1	33	2	36	0	4	1	5	0	17	7	24	0	2	1	3	68
07:30 AM	1	41	5	47	1	5	1	7	2	22	3	27	0	1	0	1	82
07:45 AM	3	59	5	67	0	5	1	6	2	23	7	32	0	3	0	3	108
Total	5	152	13	170	2	15	4	21	4	79	18	101	0	10	1	11	303
08:00 AM	2	46	1	49	1	7	0	8	0	23	6	29	1	3	0	4	90
08:15 AM	0	45	2	47	0	6	1	7	1	32	1	34	0	3	0	3	91
08:30 AM	1	41	8	50	1	2	2	5	0	28	3	31	1	4	1	6	92
08:45 AM	0	51	1	52	0	6	1	7	1	37	4	42	0	5	3	8	109
Total	3	183	12	198	2	21	4	27	2	120	14	136	2	15	4	21	382
Grand Total	8	335	25	368	4	36	8	48	6	199	32	237	2	25	5	32	685
Apprch %	2.2	91	6.8		8.3	75	16.7		2.5	84	13.5		6.2	78.1	15.6		
Total %	1.2	48.9	3.6	53.7	0.6	5.3	1.2	7	0.9	29.1	4.7	34.6	0.3	3.6	0.7	4.7	

	E Street Southbound				8th Street Westbound				E Street Northbound				8th Street Eastbound				
Start Time	Left	Thru	Right	App. Total	Left	Thru	Right	App. Total	Left	Thru	Right	App. Total	Left	Thru	Right	App. Total	Int. Total
Peak Hour Analysis From 07:00 AM to 08:45 AM - Peak 1 of 1																	
Peak Hour for Entire Intersection Begins at 08:00 AM																	
08:00 AM	**2**	46	1	49	**1**	**7**	0	**8**	0	23	**6**	29	**1**	3	0	4	90
08:15 AM	0	45	2	47	0	6	1	7	**1**	32	1	34	0	3	0	3	91
08:30 AM	1	41	**8**	50	1	2	**2**	5	0	28	3	31	1	4	1	6	92
08:45 AM	0	**51**	1	**52**	0	6	1	7	1	**37**	4	**42**	0	**5**	**3**	**8**	**109**
Total Volume	3	183	12	198	2	21	4	27	2	120	14	136	2	15	4	21	382
% App. Total	1.5	92.4	6.1		7.4	77.8	14.8		1.5	88.2	10.3		9.5	71.4	19		
PHF	.375	.897	.375	.952	.500	.750	.500	.844	.500	.811	.583	.810	.500	.750	.333	.656	.876

Counts Unlimited, Inc.
PO Box 1178
Corona, CA 92878
(951)268-6268

City of San Bernardino
N/S: E Street
E/W: 8th Street
Weather: Clear

File Name : 02_SBC_E St_8th St AM
Site Code : 20223031
Start Date : 1/11/2023
Page No : 2

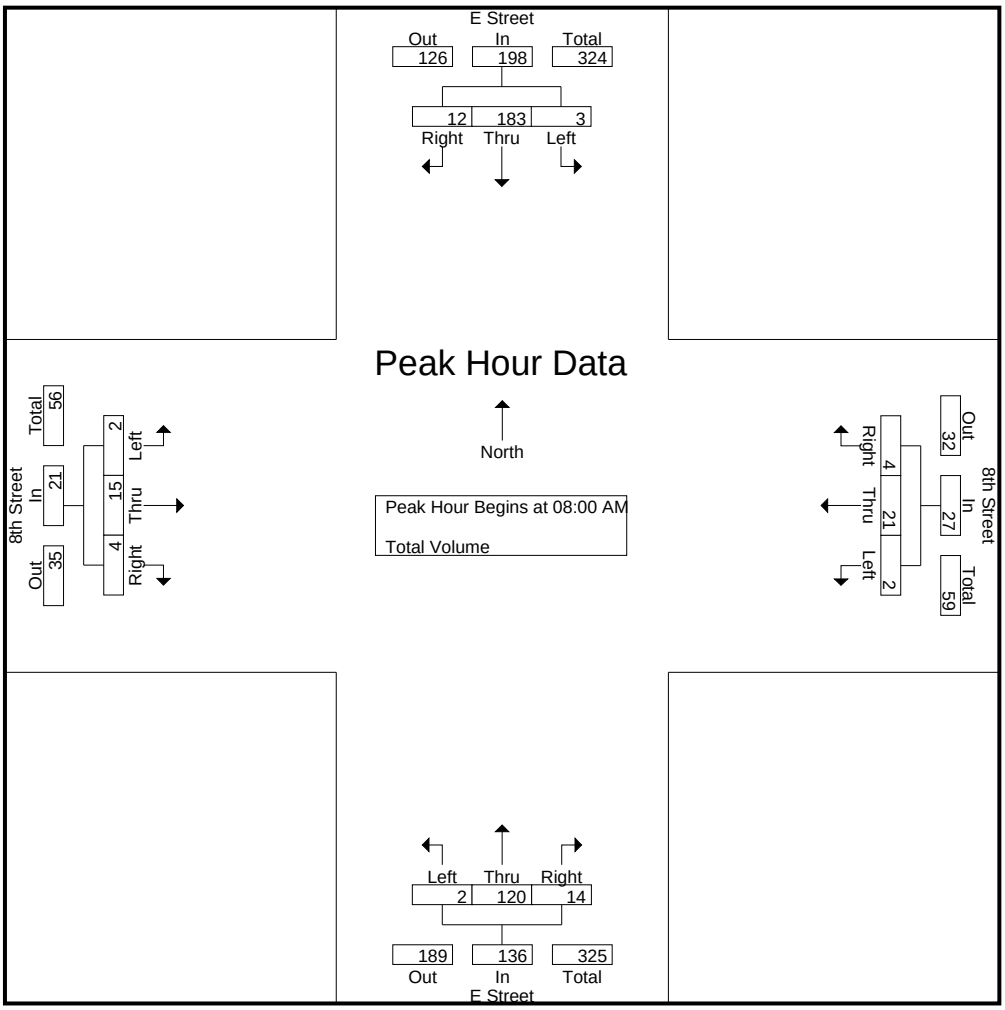

Peak Hour Analysis From 07:00 AM to 08:45 AM - Peak 1 of 1
Peak Hour for Each Approach Begins at:

	07:45 AM				07:30 AM				08:00 AM				08:00 AM			
+0 mins.	**3**	**59**	5	**67**	**1**	5	**1**	7	0	23	**6**	29	**1**	3	0	4
+15 mins.	2	46	1	49	0	5	1	6	**1**	32	1	34	0	3	0	3
+30 mins.	0	45	2	47	1	**7**	0	**8**	0	28	3	31	1	4	1	6
+45 mins.	1	41	**8**	50	0	6	1	7	1	**37**	4	**42**	0	**5**	**3**	**8**
Total Volume	6	191	16	213	2	23	3	28	2	120	14	136	2	15	4	21
% App. Total	2.8	89.7	7.5		7.1	82.1	10.7		1.5	88.2	10.3		9.5	71.4	19	
PHF	.500	.809	.500	.795	.500	.821	.750	.875	.500	.811	.583	.810	.500	.750	.333	.656

Counts Unlimited, Inc.
PO Box 1178
Corona, CA 92878
(951)268-6268

City of San Bernardino
N/S: E Street
E/W: 8th Street
Weather: Clear

File Name : 02_SBC_E St_8th St PM
Site Code : 20223031
Start Date : 1/11/2023
Page No : 1

Groups Printed- Total Volume

	E Street Southbound				8th Street Westbound				E Street Northbound				8th Street Eastbound				
Start Time	Left	Thru	Right	App. Total	Left	Thru	Right	App. Total	Left	Thru	Right	App. Total	Left	Thru	Right	App. Total	Int. Total
04:00 PM	2	75	4	81	1	9	1	11	1	67	1	69	4	5	1	10	171
04:15 PM	0	41	1	42	3	0	2	5	2	65	3	70	2	3	3	8	125
04:30 PM	1	47	2	50	5	9	10	24	8	69	2	79	9	13	4	26	179
04:45 PM	1	54	1	56	0	5	1	6	6	76	3	85	2	4	3	9	156
Total	4	217	8	229	9	23	14	46	17	277	9	303	17	25	11	53	631
05:00 PM	1	48	5	54	1	5	1	7	6	71	2	79	4	1	1	6	146
05:15 PM	0	38	5	43	2	2	3	7	5	80	1	86	1	4	2	7	143
05:30 PM	0	33	1	34	1	2	2	5	2	72	0	74	1	3	1	5	118
05:45 PM	1	41	3	45	0	2	1	3	1	69	4	74	1	0	2	3	125
Total	2	160	14	176	4	11	7	22	14	292	7	313	7	8	6	21	532
Grand Total	6	377	22	405	13	34	21	68	31	569	16	616	24	33	17	74	1163
Apprch %	1.5	93.1	5.4		19.1	50	30.9		5	92.4	2.6		32.4	44.6	23		
Total %	0.5	32.4	1.9	34.8	1.1	2.9	1.8	5.8	2.7	48.9	1.4	53	2.1	2.8	1.5	6.4	

	E Street Southbound				8th Street Westbound				E Street Northbound				8th Street Eastbound				
Start Time	Left	Thru	Right	App. Total	Left	Thru	Right	App. Total	Left	Thru	Right	App. Total	Left	Thru	Right	App. Total	Int. Total
Peak Hour Analysis From 04:00 PM to 05:45 PM - Peak 1 of 1																	
Peak Hour for Entire Intersection Begins at 04:00 PM																	
04:00 PM	**2**	**75**	**4**	**81**	1	**9**	1	11	1	67	1	69	4	5	1	10	171
04:15 PM	0	41	1	42	3	0	2	5	2	65	**3**	70	2	3	3	8	125
04:30 PM	1	47	2	50	**5**	9	**10**	**24**	**8**	69	2	79	**9**	**13**	**4**	**26**	**179**
04:45 PM	1	54	1	56	0	5	1	6	6	**76**	3	**85**	2	4	3	9	156
Total Volume	4	217	8	229	9	23	14	46	17	277	9	303	17	25	11	53	631
% App. Total	1.7	94.8	3.5		19.6	50	30.4		5.6	91.4	3		32.1	47.2	20.8		
PHF	.500	.723	.500	.707	.450	.639	.350	.479	.531	.911	.750	.891	.472	.481	.688	.510	.881

Counts Unlimited, Inc.
PO Box 1178
Corona, CA 92878
(951)268-6268

City of San Bernardino
N/S: E Street
E/W: 8th Street
Weather: Clear

File Name : 02_SBC_E St_8th St PM
Site Code : 20223031
Start Date : 1/11/2023
Page No : 2

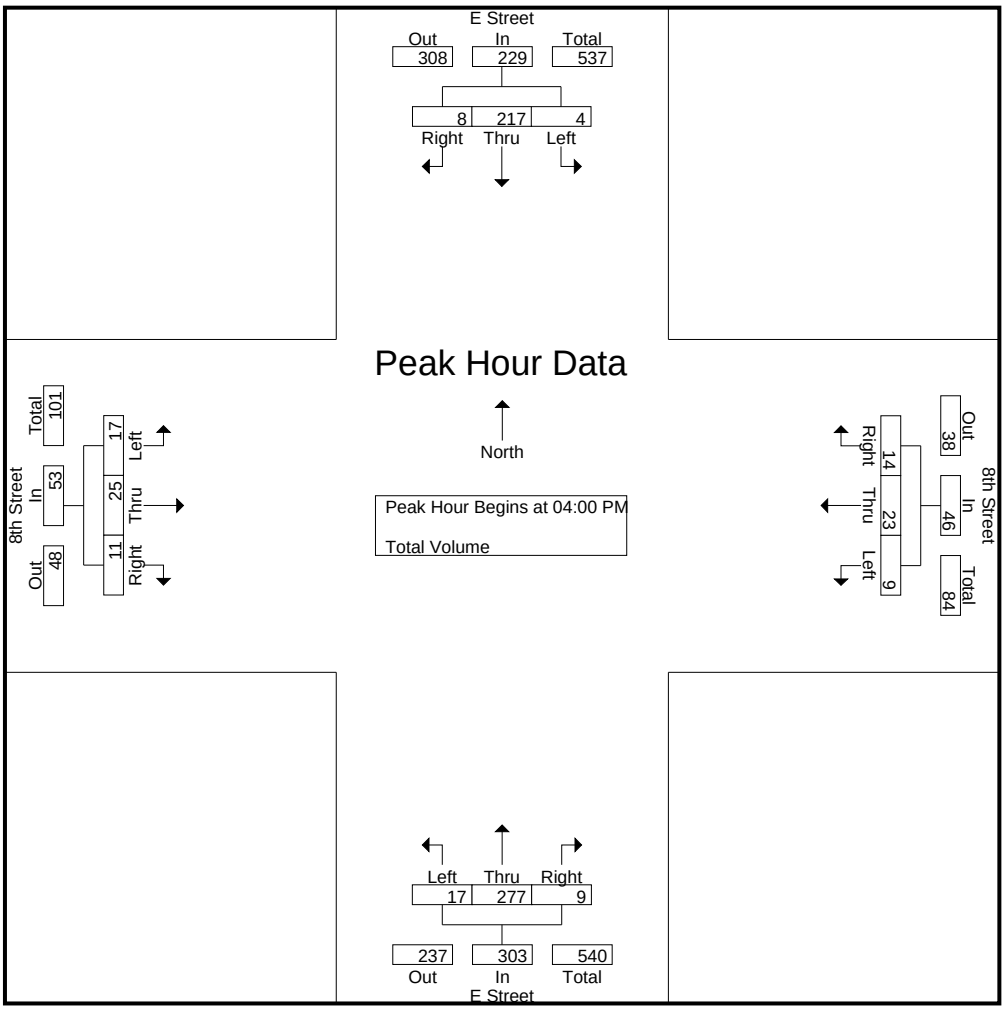

Peak Hour Analysis From 04:00 PM to 05:45 PM - Peak 1 of 1
Peak Hour for Each Approach Begins at:

	04:00 PM				04:00 PM				04:30 PM				04:00 PM			
+0 mins.	**2**	**75**	**4**	**81**	1	**9**	1	11	**8**	69	2	79	4	5	1	10
+15 mins.	0	41	1	42	3	0	2	5	6	76	**3**	85	2	3	3	8
+30 mins.	1	47	2	50	**5**	9	**10**	**24**	6	71	2	79	**9**	**13**	**4**	**26**
+45 mins.	1	54	1	56	0	5	1	6	5	**80**	1	**86**	2	4	3	9
Total Volume	4	217	8	229	9	23	14	46	25	296	8	329	17	25	11	53
% App. Total	1.7	94.8	3.5		19.6	50	30.4		7.6	90	2.4		32.1	47.2	20.8	
PHF	.500	.723	.500	.707	.450	.639	.350	.479	.781	.925	.667	.956	.472	.481	.688	.510

Counts Unlimited, Inc.
PO Box 1178
Corona, CA 92878
(951)268-6268

City of San Bernardino
N/S: E Street
E/W: 6th Street
Weather: Clear

File Name : 03_SBC_E St_6th St AM
Site Code : 20223031
Start Date : 1/11/2023
Page No : 1

Groups Printed- Total Volume

	E Street Southbound				6th Street Westbound				E Street Northbound				6th Street Eastbound				
Start Time	Left	Thru	Right	App. Total	Left	Thru	Right	App. Total	Left	Thru	Right	App. Total	Left	Thru	Right	App. Total	Int. Total
07:00 AM	0	17	2	19	1	7	1	9	1	18	8	27	2	5	0	7	62
07:15 AM	1	30	2	33	3	7	1	11	0	24	13	37	2	16	2	20	101
07:30 AM	2	42	1	45	3	7	1	11	0	22	30	52	1	13	1	15	123
07:45 AM	3	49	0	52	1	6	1	8	0	28	9	37	4	24	2	30	127
Total	6	138	5	149	8	27	4	39	1	92	60	153	9	58	5	72	413
08:00 AM	4	40	1	45	1	11	0	12	2	28	15	45	3	25	7	35	137
08:15 AM	4	44	2	50	0	9	4	13	3	33	10	46	6	26	5	37	146
08:30 AM	2	42	2	46	6	11	0	17	4	26	9	39	1	18	5	24	126
08:45 AM	2	48	5	55	4	11	3	18	5	36	9	50	4	23	8	35	158
Total	12	174	10	196	11	42	7	60	14	123	43	180	14	92	25	131	567
Grand Total	18	312	15	345	19	69	11	99	15	215	103	333	23	150	30	203	980
Apprch %	5.2	90.4	4.3		19.2	69.7	11.1		4.5	64.6	30.9		11.3	73.9	14.8		
Total %	1.8	31.8	1.5	35.2	1.9	7	1.1	10.1	1.5	21.9	10.5	34	2.3	15.3	3.1	20.7	

	E Street Southbound				6th Street Westbound				E Street Northbound				6th Street Eastbound				
Start Time	Left	Thru	Right	App. Total	Left	Thru	Right	App. Total	Left	Thru	Right	App. Total	Left	Thru	Right	App. Total	Int. Total
Peak Hour Analysis From 07:00 AM to 08:45 AM - Peak 1 of 1																	
Peak Hour for Entire Intersection Begins at 08:00 AM																	
08:00 AM	**4**	40	1	45	1	**11**	0	12	2	28	**15**	45	3	25	7	35	137
08:15 AM	4	44	2	50	0	9	**4**	13	3	33	10	46	**6**	**26**	5	**37**	146
08:30 AM	2	42	2	46	**6**	11	0	17	4	26	9	39	1	18	5	24	126
08:45 AM	2	**48**	**5**	**55**	4	11	3	**18**	**5**	**36**	9	**50**	4	23	**8**	35	**158**
Total Volume	12	174	10	196	11	42	7	60	14	123	43	180	14	92	25	131	567
% App. Total	6.1	88.8	5.1		18.3	70	11.7		7.8	68.3	23.9		10.7	70.2	19.1		
PHF	.750	.906	.500	.891	.458	.955	.438	.833	.700	.854	.717	.900	.583	.885	.781	.885	.897

Counts Unlimited, Inc.
PO Box 1178
Corona, CA 92878
(951)268-6268

City of San Bernardino
N/S: E Street
E/W: 6th Street
Weather: Clear

File Name : 03_SBC_E St_6th St AM
Site Code : 20223031
Start Date : 1/11/2023
Page No : 2

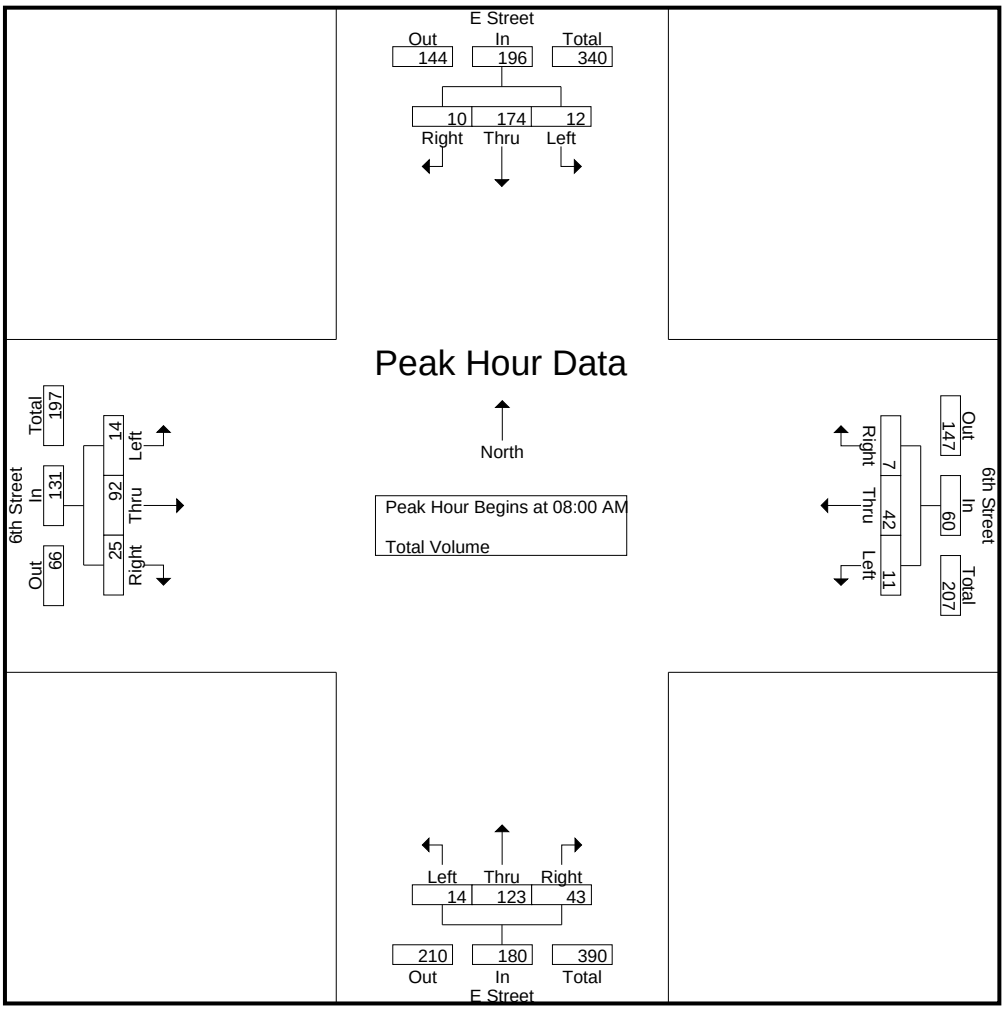

Peak Hour Analysis From 07:00 AM to 08:45 AM - Peak 1 of 1
Peak Hour for Each Approach Begins at:

	08:00 AM				08:00 AM				07:30 AM				08:00 AM			
+0 mins.	**4**	40	1	45	1	**11**	0	12	0	22	**30**	**52**	3	25	7	35
+15 mins.	4	44	2	50	0	9	**4**	13	0	28	9	37	**6**	**26**	5	**37**
+30 mins.	2	42	2	46	**6**	11	0	17	2	28	15	45	1	18	5	24
+45 mins.	2	**48**	**5**	**55**	4	11	3	**18**	**3**	**33**	10	46	4	23	**8**	35
Total Volume	12	174	10	196	11	42	7	60	5	111	64	180	14	92	25	131
% App. Total	6.1	88.8	5.1		18.3	70	11.7		2.8	61.7	35.6		10.7	70.2	19.1	
PHF	.750	.906	.500	.891	.458	.955	.438	.833	.417	.841	.533	.865	.583	.885	.781	.885

Counts Unlimited, Inc.
PO Box 1178
Corona, CA 92878
(951)268-6268

City of San Bernardino
N/S: E Street
E/W: 6th Street
Weather: Clear

File Name : 03_SBC_E St_6th St PM
Site Code : 20223031
Start Date : 1/11/2023
Page No : 1

Groups Printed- Total Volume

	E Street Southbound				6th Street Westbound				E Street Northbound				6th Street Eastbound				
Start Time	Left	Thru	Right	App. Total	Left	Thru	Right	App. Total	Left	Thru	Right	App. Total	Left	Thru	Right	App. Total	Int. Total
04:00 PM	4	67	10	81	7	41	6	54	3	58	7	68	2	13	4	19	222
04:15 PM	2	42	6	50	7	33	0	40	5	69	5	79	1	12	1	14	183
04:30 PM	4	65	3	72	21	57	2	80	7	70	3	80	3	16	1	20	252
04:45 PM	4	65	5	74	7	22	3	32	4	70	4	78	0	8	2	10	194
Total	14	239	24	277	42	153	11	206	19	267	19	305	6	49	8	63	851
05:00 PM	3	37	8	48	2	41	2	45	0	70	4	74	1	4	4	9	176
05:15 PM	0	52	4	56	0	27	4	31	3	72	1	76	3	11	2	16	179
05:30 PM	0	35	3	38	3	20	3	26	4	67	1	72	2	11	6	19	155
05:45 PM	2	41	4	47	3	18	1	22	2	64	1	67	3	11	2	16	152
Total	5	165	19	189	8	106	10	124	9	273	7	289	9	37	14	60	662
Grand Total	19	404	43	466	50	259	21	330	28	540	26	594	15	86	22	123	1513
Apprch %	4.1	86.7	9.2		15.2	78.5	6.4		4.7	90.9	4.4		12.2	69.9	17.9		
Total %	1.3	26.7	2.8	30.8	3.3	17.1	1.4	21.8	1.9	35.7	1.7	39.3	1	5.7	1.5	8.1	

	E Street Southbound				6th Street Westbound				E Street Northbound				6th Street Eastbound				
Start Time	Left	Thru	Right	App. Total	Left	Thru	Right	App. Total	Left	Thru	Right	App. Total	Left	Thru	Right	App. Total	Int. Total
Peak Hour Analysis From 04:00 PM to 05:45 PM - Peak 1 of 1																	
Peak Hour for Entire Intersection Begins at 04:00 PM																	
04:00 PM	**4**	**67**	**10**	**81**	7	41	**6**	54	3	58	**7**	68	2	13	**4**	19	222
04:15 PM	2	42	6	50	7	33	0	40	5	69	5	79	1	12	1	14	183
04:30 PM	4	65	3	72	**21**	**57**	2	**80**	**7**	**70**	3	**80**	**3**	**16**	1	**20**	**252**
04:45 PM	4	65	5	74	7	22	3	32	4	70	4	78	0	8	2	10	194
Total Volume	14	239	24	277	42	153	11	206	19	267	19	305	6	49	8	63	851
% App. Total	5.1	86.3	8.7		20.4	74.3	5.3		6.2	87.5	6.2		9.5	77.8	12.7		
PHF	.875	.892	.600	.855	.500	.671	.458	.644	.679	.954	.679	.953	.500	.766	.500	.788	.844

Counts Unlimited, Inc.
PO Box 1178
Corona, CA 92878
(951)268-6268

City of San Bernardino
N/S: E Street
E/W: 6th Street
Weather: Clear

File Name : 03_SBC_E St_6th St PM
Site Code : 20223031
Start Date : 1/11/2023
Page No : 2

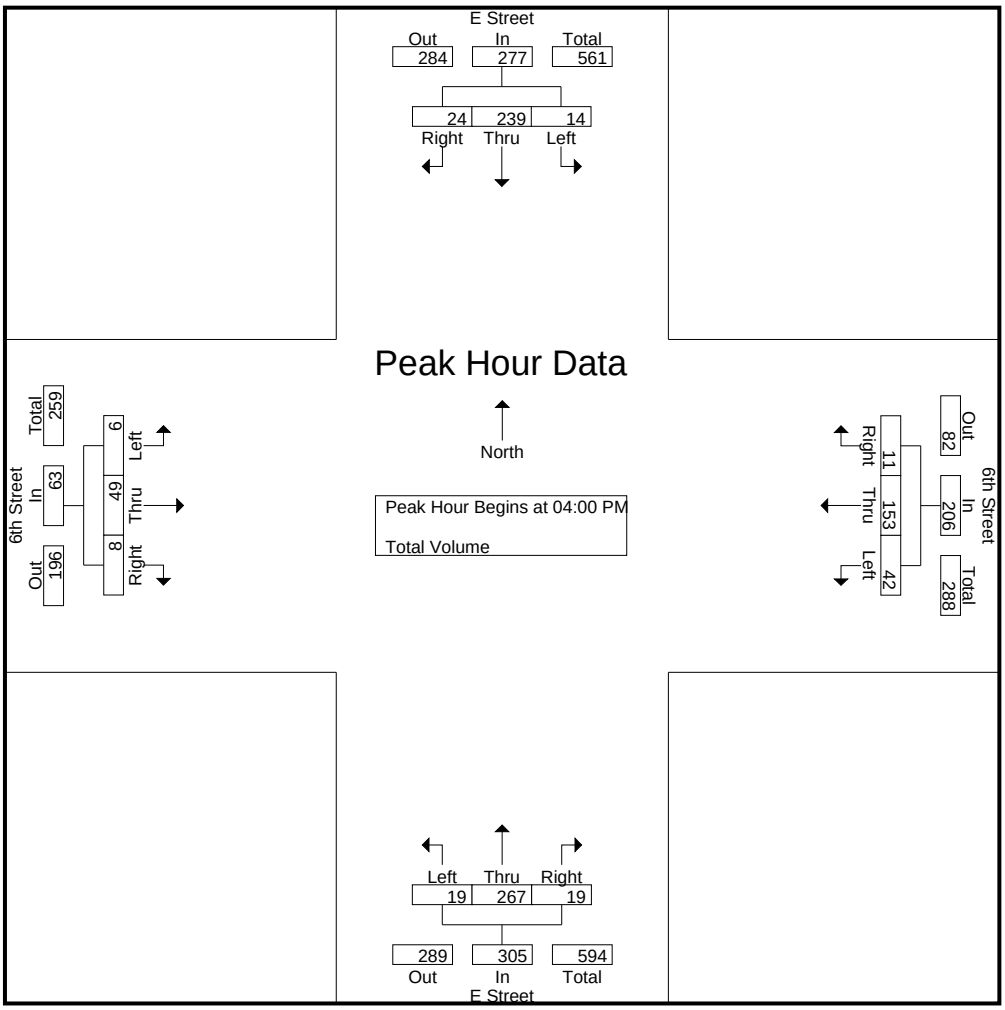

Peak Hour Analysis From 04:00 PM to 05:45 PM - Peak 1 of 1
Peak Hour for Each Approach Begins at:

	04:00 PM				04:00 PM				04:15 PM				04:00 PM			
+0 mins.	**4**	**67**	**10**	**81**	7	41	**6**	54	5	69	**5**	79	2	13	**4**	19
+15 mins.	2	42	6	50	7	33	0	40	**7**	**70**	3	**80**	1	12	1	14
+30 mins.	4	65	3	72	**21**	**57**	2	**80**	4	70	4	78	**3**	**16**	1	**20**
+45 mins.	4	65	5	74	7	22	3	32	0	70	4	74	0	8	2	10
Total Volume	14	239	24	277	42	153	11	206	16	279	16	311	6	49	8	63
% App. Total	5.1	86.3	8.7		20.4	74.3	5.3		5.1	89.7	5.1		9.5	77.8	12.7	
PHF	.875	.892	.600	.855	.500	.671	.458	.644	.571	.996	.800	.972	.500	.766	.500	.788

Counts Unlimited, Inc.
PO Box 1178
Corona, CA 92878
(951)268-6268

City of San Bernardino
N/S: E Street
E/W: 5th Street
Weather: Clear

File Name : 04_SBC_E St_5th St AM
Site Code : 20223031
Start Date : 1/11/2023
Page No : 1

Groups Printed- Total Volume

	E Street Southbound				5th Street Westbound				E Street Northbound				5th Street Eastbound				
Start Time	Left	Thru	Right	App. Total	Left	Thru	Right	App. Total	Left	Thru	Right	App. Total	Left	Thru	Right	App. Total	Int. Total
07:00 AM	2	11	4	17	2	122	1	125	4	9	2	15	17	227	5	249	406
07:15 AM	3	24	4	31	5	140	2	147	2	14	3	19	24	267	4	295	492
07:30 AM	2	41	4	47	2	137	1	140	3	21	5	29	29	252	9	290	506
07:45 AM	13	35	2	50	2	131	3	136	2	17	11	30	15	311	15	341	557
Total	20	111	14	145	11	530	7	548	11	61	21	93	85	1057	33	1175	1961
08:00 AM	6	30	10	46	2	123	4	129	9	19	5	33	21	291	6	318	526
08:15 AM	4	35	12	51	6	122	2	130	6	26	5	37	20	250	6	276	494
08:30 AM	6	29	18	53	4	137	4	145	16	25	9	50	11	214	11	236	484
08:45 AM	7	37	15	59	4	150	6	160	15	23	9	47	23	198	3	224	490
Total	23	131	55	209	16	532	16	564	46	93	28	167	75	953	26	1054	1994
Grand Total	43	242	69	354	27	1062	23	1112	57	154	49	260	160	2010	59	2229	3955
Apprch %	12.1	68.4	19.5		2.4	95.5	2.1		21.9	59.2	18.8		7.2	90.2	2.6		
Total %	1.1	6.1	1.7	9	0.7	26.9	0.6	28.1	1.4	3.9	1.2	6.6	4	50.8	1.5	56.4	

	E Street Southbound				5th Street Westbound				E Street Northbound				5th Street Eastbound				
Start Time	Left	Thru	Right	App. Total	Left	Thru	Right	App. Total	Left	Thru	Right	App. Total	Left	Thru	Right	App. Total	Int. Total
Peak Hour Analysis From 07:00 AM to 08:45 AM - Peak 1 of 1																	
Peak Hour for Entire Intersection Begins at 07:30 AM																	
07:30 AM	2	**41**	4	47	2	**137**	1	**140**	3	21	5	29	**29**	252	9	290	506
07:45 AM	**13**	35	2	50	2	131	3	136	2	17	**11**	30	15	**311**	**15**	**341**	**557**
08:00 AM	6	30	10	46	2	123	**4**	129	**9**	19	5	33	21	291	6	318	526
08:15 AM	4	35	**12**	**51**	**6**	122	2	130	6	**26**	5	**37**	20	250	6	276	494
Total Volume	25	141	28	194	12	513	10	535	20	83	26	129	85	1104	36	1225	2083
% App. Total	12.9	72.7	14.4		2.2	95.9	1.9		15.5	64.3	20.2		6.9	90.1	2.9		
PHF	.481	.860	.583	.951	.500	.936	.625	.955	.556	.798	.591	.872	.733	.887	.600	.898	.935

Counts Unlimited, Inc.
PO Box 1178
Corona, CA 92878
(951)268-6268

City of San Bernardino
N/S: E Street
E/W: 5th Street
Weather: Clear

File Name : 04_SBC_E St_5th St AM
Site Code : 20223031
Start Date : 1/11/2023
Page No : 2

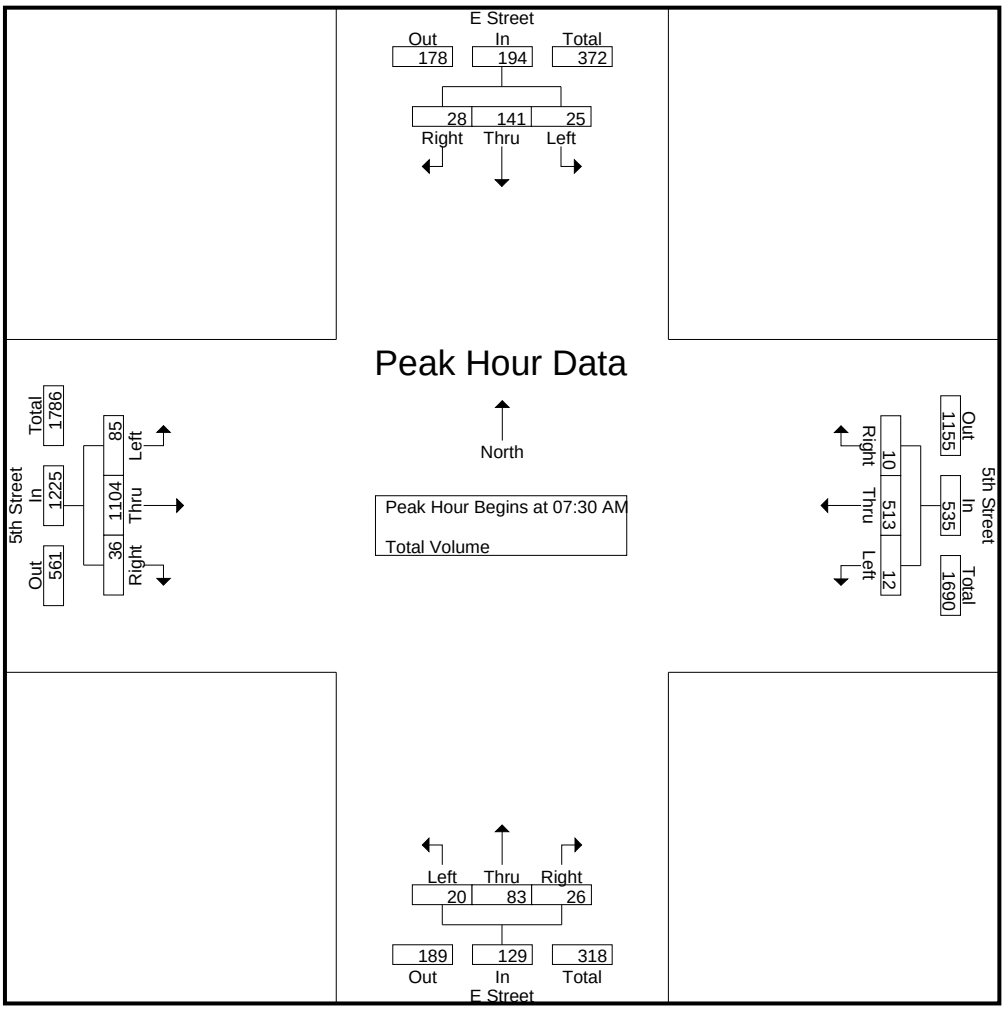

Peak Hour Analysis From 07:00 AM to 08:45 AM - Peak 1 of 1
Peak Hour for Each Approach Begins at:

	08:00 AM				08:00 AM				08:00 AM				07:15 AM			
+0 mins.	6	30	10	46	2	123	4	129	9	19	5	33	24	267	4	295
+15 mins.	4	35	12	51	**6**	122	2	130	6	**26**	5	37	**29**	252	9	290
+30 mins.	6	29	**18**	53	4	137	4	145	**16**	25	**9**	**50**	15	**311**	**15**	**341**
+45 mins.	**7**	**37**	15	**59**	4	**150**	**6**	**160**	15	23	9	47	21	291	6	318
Total Volume	23	131	55	209	16	532	16	564	46	93	28	167	89	1121	34	1244
% App. Total	11	62.7	26.3		2.8	94.3	2.8		27.5	55.7	16.8		7.2	90.1	2.7	
PHF	.821	.885	.764	.886	.667	.887	.667	.881	.719	.894	.778	.835	.767	.901	.567	.912

Counts Unlimited, Inc.
PO Box 1178
Corona, CA 92878
(951)268-6268

City of San Bernardino
N/S: E Street
E/W: 5th Street
Weather: Clear

File Name : 04_SBC_E St_5th St PM
Site Code : 20223031
Start Date : 1/11/2023
Page No : 1

Groups Printed- Total Volume

	E Street Southbound				5th Street Westbound				E Street Northbound				5th Street Eastbound				
Start Time	Left	Thru	Right	App. Total	Left	Thru	Right	App. Total	Left	Thru	Right	App. Total	Left	Thru	Right	App. Total	Int. Total
04:00 PM	12	57	12	81	16	235	5	256	9	54	5	68	4	178	12	194	599
04:15 PM	7	35	9	51	5	212	9	226	19	62	9	90	7	161	14	182	549
04:30 PM	16	54	21	91	6	225	8	239	11	67	14	92	8	189	5	202	624
04:45 PM	9	47	12	68	13	176	8	197	16	61	8	85	5	171	7	183	533
Total	44	193	54	291	40	848	30	918	55	244	36	335	24	699	38	761	2305
05:00 PM	8	27	11	46	6	272	6	284	23	69	15	107	1	182	10	193	630
05:15 PM	3	42	4	49	4	222	8	234	13	67	9	89	3	165	8	176	548
05:30 PM	6	33	9	48	4	221	3	228	22	63	6	91	5	130	9	144	511
05:45 PM	4	41	11	56	2	179	4	185	15	61	7	83	2	152	4	158	482
Total	21	143	35	199	16	894	21	931	73	260	37	370	11	629	31	671	2171
Grand Total	65	336	89	490	56	1742	51	1849	128	504	73	705	35	1328	69	1432	4476
Apprch %	13.3	68.6	18.2		3	94.2	2.8		18.2	71.5	10.4		2.4	92.7	4.8		
Total %	1.5	7.5	2	10.9	1.3	38.9	1.1	41.3	2.9	11.3	1.6	15.8	0.8	29.7	1.5	32	

	E Street Southbound				5th Street Westbound				E Street Northbound				5th Street Eastbound				
Start Time	Left	Thru	Right	App. Total	Left	Thru	Right	App. Total	Left	Thru	Right	App. Total	Left	Thru	Right	App. Total	Int. Total
Peak Hour Analysis From 04:00 PM to 05:45 PM - Peak 1 of 1																	
Peak Hour for Entire Intersection Begins at 04:15 PM																	
04:15 PM	7	35	9	51	5	212	**9**	226	19	62	9	90	7	161	**14**	182	549
04:30 PM	**16**	**54**	**21**	**91**	6	225	8	239	11	67	14	92	**8**	**189**	5	**202**	624
04:45 PM	9	47	12	68	**13**	176	8	197	16	61	8	85	5	171	7	183	533
05:00 PM	8	27	11	46	6	**272**	6	**284**	**23**	**69**	**15**	**107**	1	182	10	193	**630**
Total Volume	40	163	53	256	30	885	31	946	69	259	46	374	21	703	36	760	2336
% App. Total	15.6	63.7	20.7		3.2	93.6	3.3		18.4	69.3	12.3		2.8	92.5	4.7		
PHF	.625	.755	.631	.703	.577	.813	.861	.833	.750	.938	.767	.874	.656	.930	.643	.941	.927

Counts Unlimited, Inc.
PO Box 1178
Corona, CA 92878
(951)268-6268

City of San Bernardino
N/S: E Street
E/W: 5th Street
Weather: Clear

File Name : 04_SBC_E St_5th St PM
Site Code : 20223031
Start Date : 1/11/2023
Page No : 2

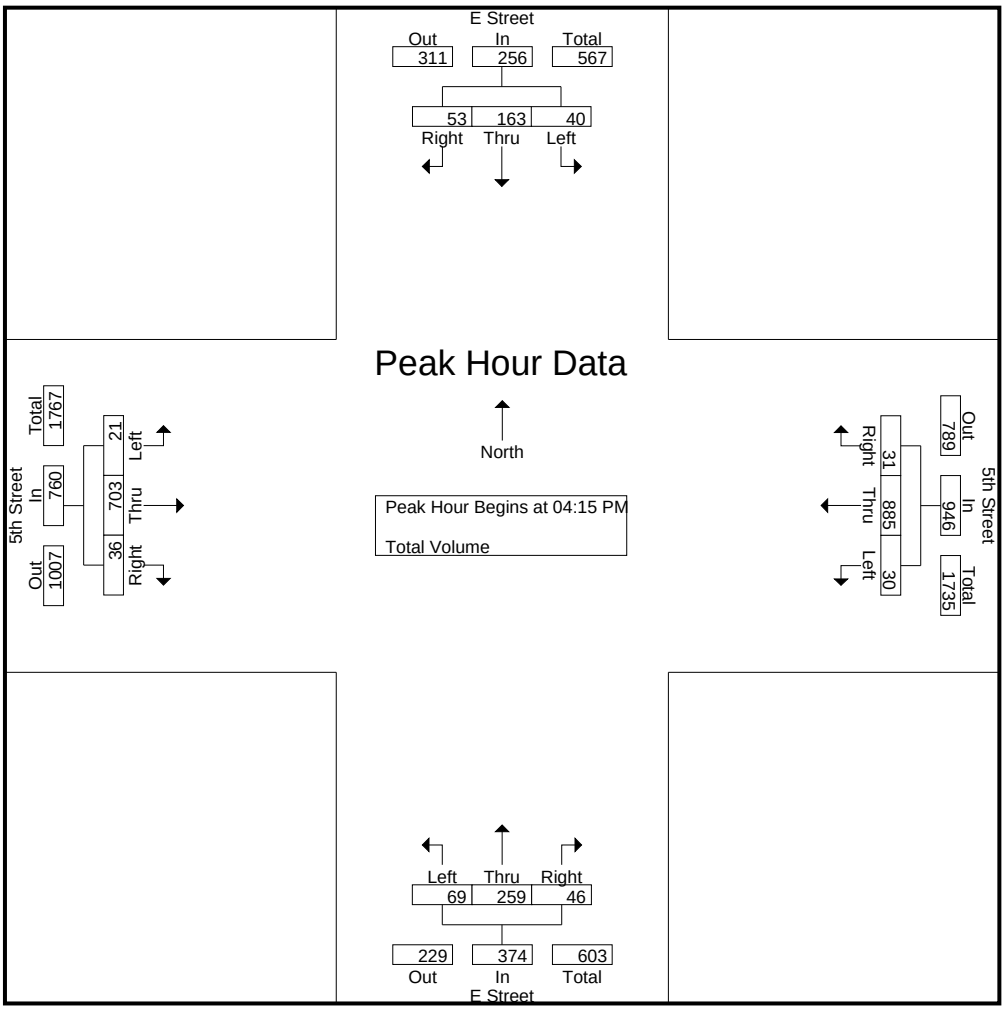

Peak Hour Analysis From 04:00 PM to 05:45 PM - Peak 1 of 1
Peak Hour for Each Approach Begins at:

	04:00 PM				04:30 PM				04:15 PM				04:00 PM			
+0 mins.	12	**57**	12	81	6	225	**8**	239	19	62	9	90	4	178	12	194
+15 mins.	7	35	9	51	**13**	176	8	197	11	67	14	92	7	161	**14**	182
+30 mins.	**16**	54	**21**	**91**	6	**272**	6	**284**	16	61	8	85	**8**	**189**	5	**202**
+45 mins.	9	47	12	68	4	222	8	234	**23**	**69**	**15**	**107**	5	171	7	183
Total Volume	44	193	54	291	29	895	30	954	69	259	46	374	24	699	38	761
% App. Total	15.1	66.3	18.6		3	93.8	3.1		18.4	69.3	12.3		3.2	91.9	5	
PHF	.688	.846	.643	.799	.558	.823	.938	.840	.750	.938	.767	.874	.750	.925	.679	.942

Counts Unlimited, Inc.
PO Box 1178
Corona, CA 92878
(951)268-6268

City of San Bernardino
N/S: F Street
E/W: 9th Street
Weather: Clear

File Name : 05_SBC_F St_9th St AM
Site Code : 20223031
Start Date : 1/11/2023
Page No : 1

Groups Printed- Total Volume

	F Street Southbound				9th Street Westbound				F Street Northbound				9th Street Eastbound				
Start Time	Left	Thru	Right	App. Total	Left	Thru	Right	App. Total	Left	Thru	Right	App. Total	Left	Thru	Right	App. Total	Int. Total
07:00 AM	3	5	2	10	0	59	1	60	1	4	3	8	3	49	5	57	135
07:15 AM	2	1	6	9	1	83	2	86	2	2	2	6	6	62	10	78	179
07:30 AM	1	14	4	19	1	88	3	92	0	2	3	5	4	83	8	95	211
07:45 AM	3	15	2	20	2	78	6	86	0	4	1	5	1	113	15	129	240
Total	9	35	14	58	4	308	12	324	3	12	9	24	14	307	38	359	765
08:00 AM	3	15	1	19	2	63	4	69	0	3	0	3	1	84	19	104	195
08:15 AM	2	16	3	21	11	61	3	75	4	8	4	16	4	81	17	102	214
08:30 AM	2	18	6	26	7	82	3	92	4	10	5	19	1	71	12	84	221
08:45 AM	2	11	1	14	6	71	4	81	2	16	7	25	2	59	6	67	187
Total	9	60	11	80	26	277	14	317	10	37	16	63	8	295	54	357	817
Grand Total	18	95	25	138	30	585	26	641	13	49	25	87	22	602	92	716	1582
Apprch %	13	68.8	18.1		4.7	91.3	4.1		14.9	56.3	28.7		3.1	84.1	12.8		
Total %	1.1	6	1.6	8.7	1.9	37	1.6	40.5	0.8	3.1	1.6	5.5	1.4	38.1	5.8	45.3	

	F Street Southbound				9th Street Westbound				F Street Northbound				9th Street Eastbound				
Start Time	Left	Thru	Right	App. Total	Left	Thru	Right	App. Total	Left	Thru	Right	App. Total	Left	Thru	Right	App. Total	Int. Total
Peak Hour Analysis From 07:00 AM to 08:45 AM - Peak 1 of 1																	
Peak Hour for Entire Intersection Begins at 07:45 AM																	
07:45 AM	**3**	15	2	20	2	78	**6**	86	0	4	1	5	1	**113**	15	**129**	**240**
08:00 AM	3	15	1	19	2	63	4	69	0	3	0	3	1	84	**19**	104	195
08:15 AM	2	16	3	21	**11**	61	3	75	**4**	8	4	16	**4**	81	17	102	214
08:30 AM	2	**18**	**6**	**26**	7	**82**	3	**92**	4	**10**	**5**	**19**	1	71	12	84	221
Total Volume	10	64	12	86	22	284	16	322	8	25	10	43	7	349	63	419	870
% App. Total	11.6	74.4	14		6.8	88.2	5		18.6	58.1	23.3		1.7	83.3	15		
PHF	.833	.889	.500	.827	.500	.866	.667	.875	.500	.625	.500	.566	.438	.772	.829	.812	.906

Counts Unlimited, Inc.
PO Box 1178
Corona, CA 92878
(951)268-6268

City of San Bernardino
N/S: F Street
E/W: 9th Street
Weather: Clear

File Name : 05_SBC_F St_9th St AM
Site Code : 20223031
Start Date : 1/11/2023
Page No : 2

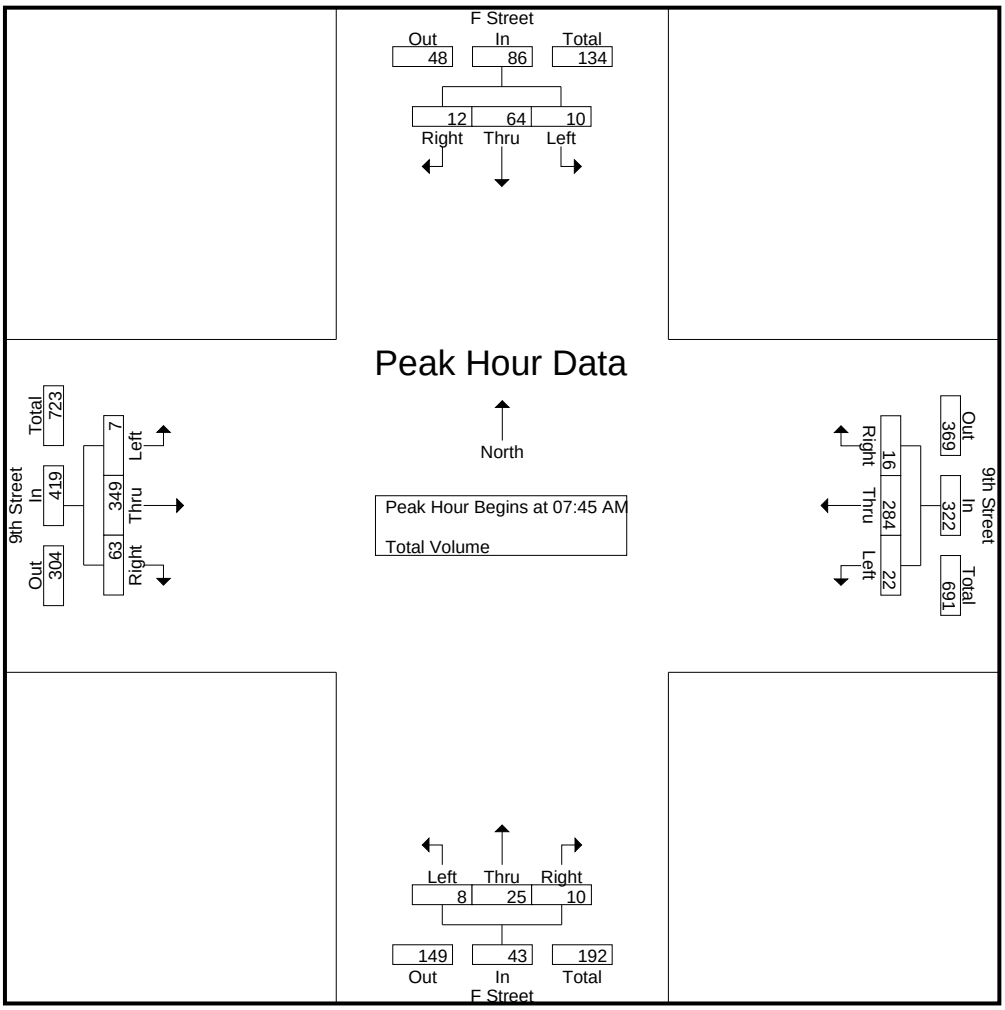

Peak Hour Analysis From 07:00 AM to 08:45 AM - Peak 1 of 1
Peak Hour for Each Approach Begins at:

	07:45 AM				07:15 AM				08:00 AM				07:30 AM			
+0 mins.	**3**	15	2	20	1	83	2	86	0	3	0	3	**4**	83	8	95
+15 mins.	3	15	1	19	1	**88**	3	**92**	**4**	8	4	16	1	**113**	15	**129**
+30 mins.	2	16	3	21	**2**	78	**6**	86	4	10	5	19	1	84	**19**	104
+45 mins.	2	**18**	**6**	**26**	2	63	4	69	2	**16**	**7**	**25**	4	81	17	102
Total Volume	10	64	12	86	6	312	15	333	10	37	16	63	10	361	59	430
% App. Total	11.6	74.4	14		1.8	93.7	4.5		15.9	58.7	25.4		2.3	84	13.7	
PHF	.833	.889	.500	.827	.750	.886	.625	.905	.625	.578	.571	.630	.625	.799	.776	.833

Counts Unlimited, Inc.
PO Box 1178
Corona, CA 92878
(951)268-6268

City of San Bernardino
N/S: F Street
E/W: 9th Street
Weather: Clear

File Name : 05_SBC_F St_9th St PM
Site Code : 20223031
Start Date : 1/11/2023
Page No : 1

Groups Printed- Total Volume

	F Street Southbound				9th Street Westbound				F Street Northbound				9th Street Eastbound				
Start Time	Left	Thru	Right	App. Total	Left	Thru	Right	App. Total	Left	Thru	Right	App. Total	Left	Thru	Right	App. Total	Int. Total
04:00 PM	2	9	4	15	3	100	5	108	5	20	6	31	3	87	4	94	248
04:15 PM	4	7	10	21	2	115	4	121	6	5	3	14	3	97	7	107	263
04:30 PM	1	8	4	13	2	100	5	107	14	23	5	42	3	85	5	93	255
04:45 PM	2	6	2	10	2	99	3	104	8	18	1	27	3	95	7	105	246
Total	9	30	20	59	9	414	17	440	33	66	15	114	12	364	23	399	1012
05:00 PM	2	4	4	10	2	125	6	133	5	17	5	27	3	87	9	99	269
05:15 PM	1	6	5	12	1	103	6	110	3	11	2	16	3	87	7	97	235
05:30 PM	2	9	3	14	1	101	8	110	4	9	2	15	7	77	3	87	226
05:45 PM	4	3	2	9	3	73	6	82	3	6	3	12	2	70	9	81	184
Total	9	22	14	45	7	402	26	435	15	43	12	70	15	321	28	364	914
Grand Total	18	52	34	104	16	816	43	875	48	109	27	184	27	685	51	763	1926
Apprch %	17.3	50	32.7		1.8	93.3	4.9		26.1	59.2	14.7		3.5	89.8	6.7		
Total %	0.9	2.7	1.8	5.4	0.8	42.4	2.2	45.4	2.5	5.7	1.4	9.6	1.4	35.6	2.6	39.6	

	F Street Southbound				9th Street Westbound				F Street Northbound				9th Street Eastbound				
Start Time	Left	Thru	Right	App. Total	Left	Thru	Right	App. Total	Left	Thru	Right	App. Total	Left	Thru	Right	App. Total	Int. Total
Peak Hour Analysis From 04:00 PM to 05:45 PM - Peak 1 of 1																	
Peak Hour for Entire Intersection Begins at 04:15 PM																	
04:15 PM	**4**	7	**10**	**21**	**2**	115	4	121	6	5	3	14	**3**	**97**	7	**107**	263
04:30 PM	1	**8**	4	13	2	100	5	107	**14**	**23**	**5**	**42**	3	85	5	93	255
04:45 PM	2	6	2	10	2	99	3	104	8	18	1	27	3	95	7	105	246
05:00 PM	2	4	4	10	2	**125**	**6**	**133**	5	17	5	27	3	87	**9**	99	**269**
Total Volume	9	25	20	54	8	439	18	465	33	63	14	110	12	364	28	404	1033
% App. Total	16.7	46.3	37		1.7	94.4	3.9		30	57.3	12.7		3	90.1	6.9		
PHF	.563	.781	.500	.643	1.00	.878	.750	.874	.589	.685	.700	.655	1.00	.938	.778	.944	.960

Counts Unlimited, Inc.
PO Box 1178
Corona, CA 92878
(951)268-6268

City of San Bernardino
N/S: F Street
E/W: 9th Street
Weather: Clear

File Name : 05_SBC_F St_9th St PM
Site Code : 20223031
Start Date : 1/11/2023
Page No : 2

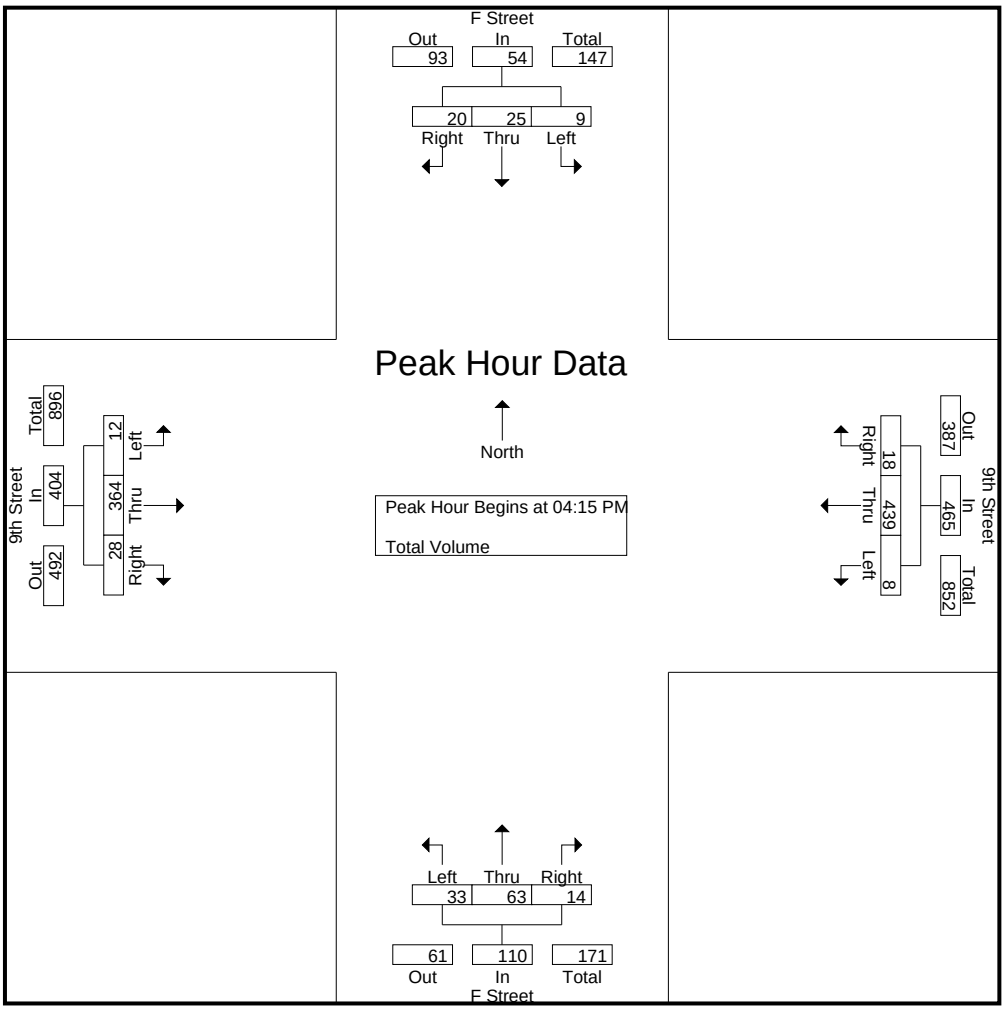

Peak Hour Analysis From 04:00 PM to 05:45 PM - Peak 1 of 1
Peak Hour for Each Approach Begins at:

	04:00 PM				04:15 PM				04:00 PM				04:15 PM			
+0 mins.	2	**9**	4	15	**2**	115	4	121	5	20	**6**	31	**3**	**97**	7	**107**
+15 mins.	**4**	7	**10**	**21**	2	100	5	107	6	5	3	14	3	85	5	93
+30 mins.	1	8	4	13	2	99	3	104	**14**	**23**	5	**42**	3	95	7	105
+45 mins.	2	6	2	10	2	**125**	**6**	**133**	8	18	1	27	3	87	**9**	99
Total Volume	9	30	20	59	8	439	18	465	33	66	15	114	12	364	28	404
% App. Total	15.3	50.8	33.9		1.7	94.4	3.9		28.9	57.9	13.2		3	90.1	6.9	
PHF	.563	.833	.500	.702	1.000	.878	.750	.874	.589	.717	.625	.679	1.000	.938	.778	.944

Counts Unlimited, Inc.
PO Box 1178
Corona, CA 92878
(951)268-6268

City of San Bernardino
N/S: F Street
E/W: 8th Street
Weather: Clear

File Name : 06_SBC_F St_8th St AM
Site Code : 20223031
Start Date : 1/11/2023
Page No : 1

Groups Printed- Total Volume

	F Street Southbound				8th Street Westbound				F Street Northbound				8th Street Eastbound				
Start Time	Left	Thru	Right	App. Total	Left	Thru	Right	App. Total	Left	Thru	Right	App. Total	Left	Thru	Right	App. Total	Int. Total
07:00 AM	3	8	0	11	2	2	0	4	0	4	0	4	1	3	1	5	24
07:15 AM	2	8	0	10	3	4	1	8	0	2	0	2	0	1	2	3	23
07:30 AM	1	20	1	22	0	6	2	8	0	2	2	4	1	2	4	7	41
07:45 AM	4	25	3	32	3	3	0	6	2	6	0	8	0	2	3	5	51
Total	10	61	4	75	8	15	3	26	2	14	2	18	2	8	10	20	139
08:00 AM	2	32	1	35	1	5	0	6	1	3	1	5	0	1	3	4	50
08:15 AM	0	44	1	45	7	2	0	9	4	15	1	20	0	2	8	10	84
08:30 AM	1	36	0	37	6	2	1	9	4	17	2	23	2	4	7	13	82
08:45 AM	1	22	0	23	4	0	4	8	1	18	5	24	1	2	5	8	63
Total	4	134	2	140	18	9	5	32	10	53	9	72	3	9	23	35	279
Grand Total	14	195	6	215	26	24	8	58	12	67	11	90	5	17	33	55	418
Apprch %	6.5	90.7	2.8		44.8	41.4	13.8		13.3	74.4	12.2		9.1	30.9	60		
Total %	3.3	46.7	1.4	51.4	6.2	5.7	1.9	13.9	2.9	16	2.6	21.5	1.2	4.1	7.9	13.2	

	F Street Southbound				8th Street Westbound				F Street Northbound				8th Street Eastbound				
Start Time	Left	Thru	Right	App. Total	Left	Thru	Right	App. Total	Left	Thru	Right	App. Total	Left	Thru	Right	App. Total	Int. Total
Peak Hour Analysis From 07:00 AM to 08:45 AM - Peak 1 of 1																	
Peak Hour for Entire Intersection Begins at 08:00 AM																	
08:00 AM	**2**	32	**1**	35	1	**5**	0	6	1	3	1	5	0	1	3	4	50
08:15 AM	0	**44**	1	**45**	**7**	2	0	**9**	**4**	15	1	20	0	2	**8**	10	**84**
08:30 AM	1	36	0	37	6	2	1	9	4	17	2	23	**2**	**4**	7	**13**	82
08:45 AM	1	22	0	23	4	0	**4**	8	1	**18**	**5**	**24**	1	2	5	8	63
Total Volume	4	134	2	140	18	9	5	32	10	53	9	72	3	9	23	35	279
% App. Total	2.9	95.7	1.4		56.2	28.1	15.6		13.9	73.6	12.5		8.6	25.7	65.7		
PHF	.500	.761	.500	.778	.643	.450	.313	.889	.625	.736	.450	.750	.375	.563	.719	.673	.830

Counts Unlimited, Inc.
PO Box 1178
Corona, CA 92878
(951)268-6268

City of San Bernardino
N/S: F Street
E/W: 8th Street
Weather: Clear

File Name : 06_SBC_F St_8th St AM
Site Code : 20223031
Start Date : 1/11/2023
Page No : 2

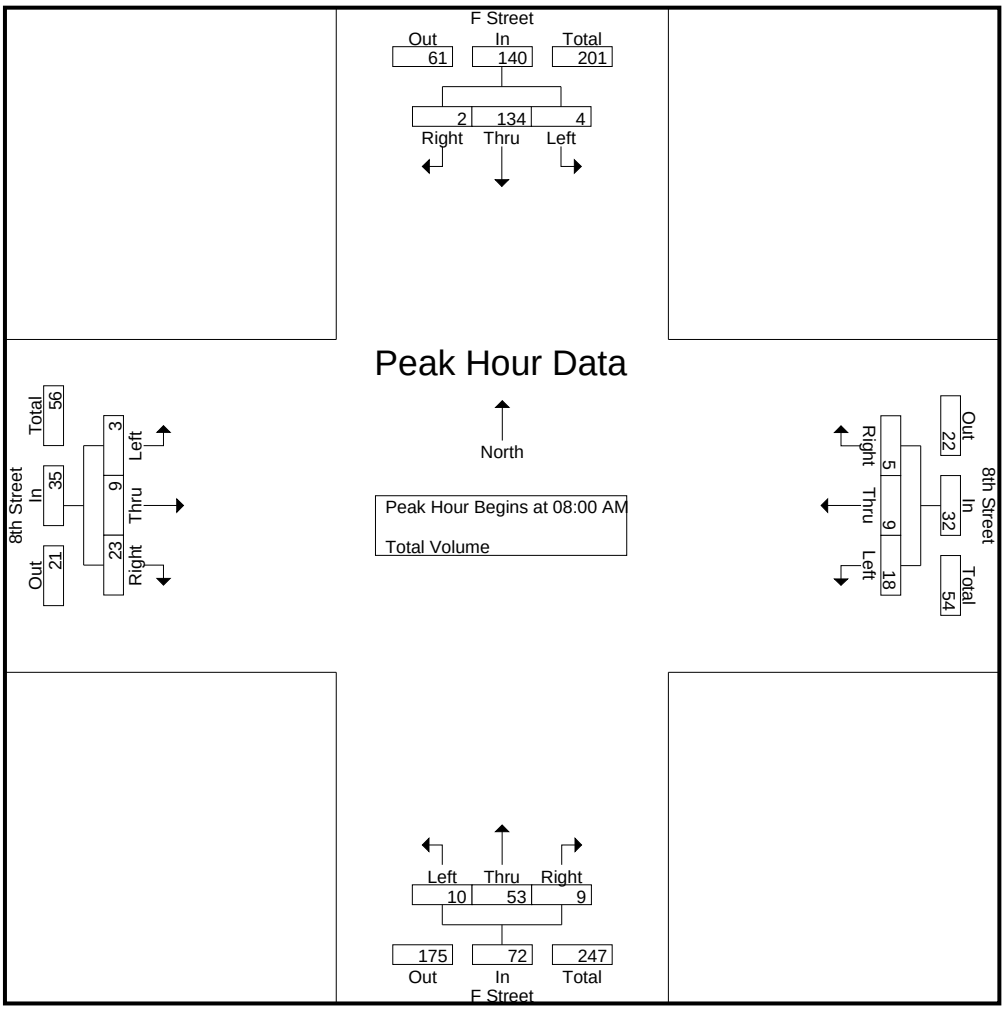

Peak Hour Analysis From 07:00 AM to 08:45 AM - Peak 1 of 1
Peak Hour for Each Approach Begins at:

	07:45 AM				08:00 AM				08:00 AM				08:00 AM			
+0 mins.	**4**	25	**3**	32	1	**5**	0	6	1	3	1	5	0	1	3	4
+15 mins.	2	32	1	35	**7**	2	0	**9**	**4**	15	1	20	0	2	**8**	10
+30 mins.	0	**44**	1	**45**	6	2	1	9	4	17	2	23	**2**	**4**	7	**13**
+45 mins.	1	36	0	37	4	0	**4**	8	1	**18**	**5**	**24**	1	2	5	8
Total Volume	7	137	5	149	18	9	5	32	10	53	9	72	3	9	23	35
% App. Total	4.7	91.9	3.4		56.2	28.1	15.6		13.9	73.6	12.5		8.6	25.7	65.7	
PHF	.438	.778	.417	.828	.643	.450	.313	.889	.625	.736	.450	.750	.375	.563	.719	.673

Counts Unlimited, Inc.
PO Box 1178
Corona, CA 92878
(951)268-6268

City of San Bernardino
N/S: F Street
E/W: 8th Street
Weather: Clear

File Name : 06_SBC_F St_8th St PM
Site Code : 20223031
Start Date : 1/11/2023
Page No : 1

Groups Printed- Total Volume

	F Street Southbound				8th Street Westbound				F Street Northbound				8th Street Eastbound				
Start Time	Left	Thru	Right	App. Total	Left	Thru	Right	App. Total	Left	Thru	Right	App. Total	Left	Thru	Right	App. Total	Int. Total
04:00 PM	4	11	2	17	5	7	0	12	5	24	0	29	0	2	1	3	61
04:15 PM	1	6	5	12	1	3	1	5	2	16	2	20	0	4	5	9	46
04:30 PM	1	9	3	13	9	6	13	28	4	30	2	36	3	4	0	7	84
04:45 PM	5	8	1	14	1	9	12	22	2	14	1	17	0	2	1	3	56
Total	11	34	11	56	16	25	26	67	13	84	5	102	3	12	7	22	247
05:00 PM	5	7	1	13	2	5	6	13	1	19	0	20	2	1	0	3	49
05:15 PM	1	9	2	12	0	4	3	7	1	11	1	13	0	1	4	5	37
05:30 PM	0	8	5	13	0	4	1	5	0	14	1	15	2	2	1	5	38
05:45 PM	1	7	4	12	1	4	3	8	3	10	0	13	1	2	0	3	36
Total	7	31	12	50	3	17	13	33	5	54	2	61	5	6	5	16	160
Grand Total	18	65	23	106	19	42	39	100	18	138	7	163	8	18	12	38	407
Apprch %	17	61.3	21.7		19	42	39		11	84.7	4.3		21.1	47.4	31.6		
Total %	4.4	16	5.7	26	4.7	10.3	9.6	24.6	4.4	33.9	1.7	40	2	4.4	2.9	9.3	

	F Street Southbound				8th Street Westbound				F Street Northbound				8th Street Eastbound				
Start Time	Left	Thru	Right	App. Total	Left	Thru	Right	App. Total	Left	Thru	Right	App. Total	Left	Thru	Right	App. Total	Int. Total
Peak Hour Analysis From 04:00 PM to 05:45 PM - Peak 1 of 1																	
Peak Hour for Entire Intersection Begins at 04:00 PM																	
04:00 PM	4	**11**	2	**17**	5	7	0	12	**5**	24	0	29	0	2	1	3	61
04:15 PM	1	6	**5**	12	1	3	1	5	2	16	**2**	20	0	**4**	**5**	**9**	46
04:30 PM	1	9	3	13	**9**	6	**13**	**28**	4	**30**	2	**36**	**3**	4	0	7	**84**
04:45 PM	**5**	8	1	14	1	**9**	12	22	2	14	1	17	0	2	1	3	56
Total Volume	11	34	11	56	16	25	26	67	13	84	5	102	3	12	7	22	247
% App. Total	19.6	60.7	19.6		23.9	37.3	38.8		12.7	82.4	4.9		13.6	54.5	31.8		
PHF	.550	.773	.550	.824	.444	.694	.500	.598	.650	.700	.625	.708	.250	.750	.350	.611	.735

Counts Unlimited, Inc.
PO Box 1178
Corona, CA 92878
(951)268-6268

City of San Bernardino
N/S: F Street
E/W: 8th Street
Weather: Clear

File Name : 06_SBC_F St_8th St PM
Site Code : 20223031
Start Date : 1/11/2023
Page No : 2

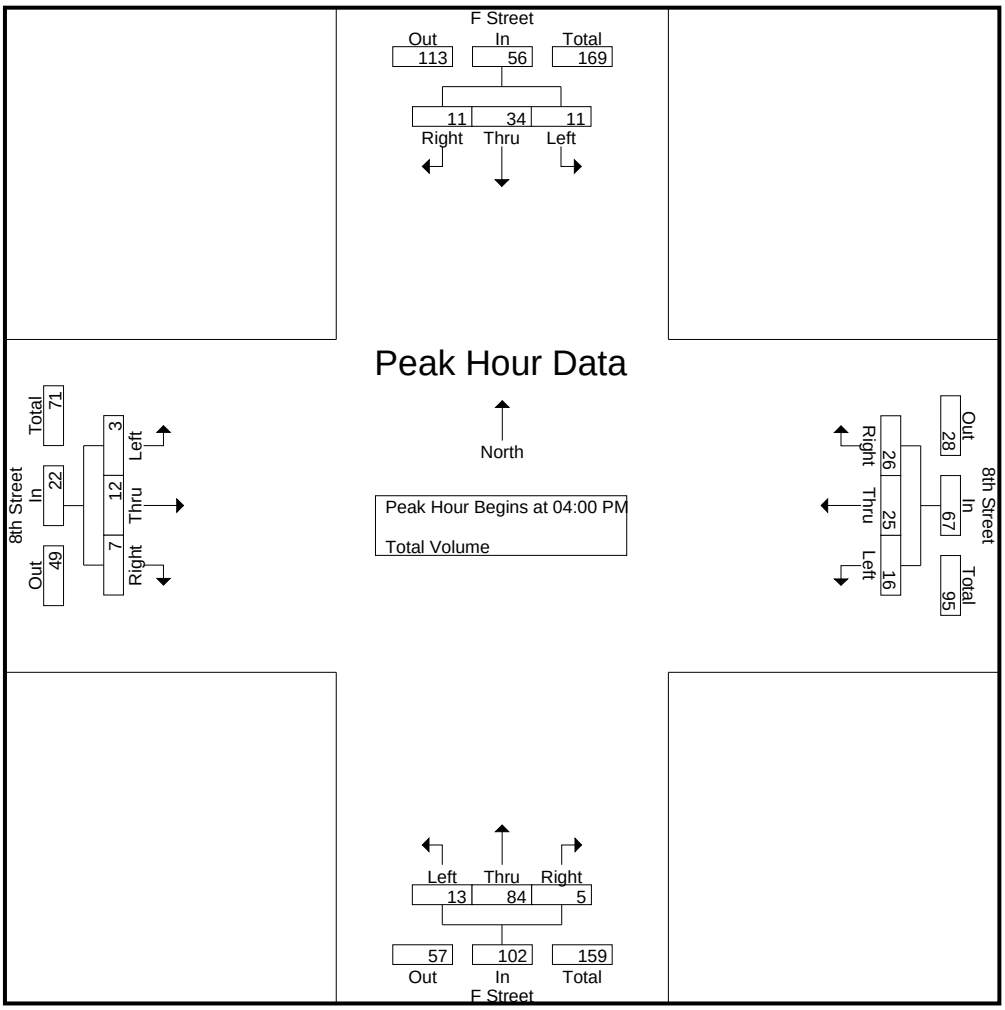

Peak Hour Analysis From 04:00 PM to 05:45 PM - Peak 1 of 1
Peak Hour for Each Approach Begins at:

	04:00 PM				04:30 PM				04:00 PM				04:00 PM			
+0 mins.	4	**11**	2	**17**	**9**	6	**13**	**28**	**5**	24	0	29	0	2	1	3
+15 mins.	1	6	**5**	12	1	**9**	12	22	2	16	**2**	20	0	**4**	**5**	**9**
+30 mins.	1	9	3	13	2	5	6	13	4	**30**	2	**36**	**3**	4	0	7
+45 mins.	**5**	8	1	14	0	4	3	7	2	14	1	17	0	2	1	3
Total Volume	11	34	11	56	12	24	34	70	13	84	5	102	3	12	7	22
% App. Total	19.6	60.7	19.6		17.1	34.3	48.6		12.7	82.4	4.9		13.6	54.5	31.8	
PHF	.550	.773	.550	.824	.333	.667	.654	.625	.650	.700	.625	.708	.250	.750	.350	.611

Counts Unlimited, Inc.
PO Box 1178
Corona, CA 92878
(951)268-6268

City of San Bernardino
N/S: F Street
E/W: 6th Street
Weather: Clear

File Name : 07_SBC_F St_6th St AM
Site Code : 20223031
Start Date : 1/11/2023
Page No : 1

Groups Printed- Total Volume

	F Street Southbound				6th Street Westbound				F Street Northbound				6th Street Eastbound				
Start Time	Left	Thru	Right	App. Total	Left	Thru	Right	App. Total	Left	Thru	Right	App. Total	Left	Thru	Right	App. Total	Int. Total
07:00 AM	1	3	1	5	0	8	1	9	1	10	1	12	3	7	3	13	39
07:15 AM	1	7	2	10	1	8	1	10	1	11	3	15	2	19	4	25	60
07:30 AM	0	11	2	13	1	7	1	9	2	14	2	18	2	11	1	14	54
07:45 AM	2	11	4	17	1	5	1	7	1	24	2	27	11	28	3	42	93
Total	4	32	9	45	3	28	4	35	5	59	8	72	18	65	11	94	246
08:00 AM	3	6	6	15	1	9	3	13	4	17	11	32	4	27	4	35	95
08:15 AM	5	11	17	33	1	9	4	14	2	14	9	25	7	20	7	34	106
08:30 AM	5	17	18	40	6	11	3	20	3	11	8	22	5	11	5	21	103
08:45 AM	2	10	11	23	3	15	2	20	6	11	10	27	5	24	2	31	101
Total	15	44	52	111	11	44	12	67	15	53	38	106	21	82	18	121	405
Grand Total	19	76	61	156	14	72	16	102	20	112	46	178	39	147	29	215	651
Apprch %	12.2	48.7	39.1		13.7	70.6	15.7		11.2	62.9	25.8		18.1	68.4	13.5		
Total %	2.9	11.7	9.4	24	2.2	11.1	2.5	15.7	3.1	17.2	7.1	27.3	6	22.6	4.5	33	

	F Street Southbound				6th Street Westbound				F Street Northbound				6th Street Eastbound				
Start Time	Left	Thru	Right	App. Total	Left	Thru	Right	App. Total	Left	Thru	Right	App. Total	Left	Thru	Right	App. Total	Int. Total
Peak Hour Analysis From 07:00 AM to 08:45 AM - Peak 1 of 1																	
Peak Hour for Entire Intersection Begins at 08:00 AM																	
08:00 AM	3	6	6	15	1	9	3	13	4	**17**	**11**	**32**	4	**27**	4	**35**	95
08:15 AM	**5**	11	17	33	1	9	**4**	14	2	14	9	25	**7**	20	**7**	34	**106**
08:30 AM	5	**17**	**18**	**40**	**6**	11	3	**20**	3	11	8	22	5	11	5	21	103
08:45 AM	2	10	11	23	3	**15**	2	20	**6**	11	10	27	5	24	2	31	101
Total Volume	15	44	52	111	11	44	12	67	15	53	38	106	21	82	18	121	405
% App. Total	13.5	39.6	46.8		16.4	65.7	17.9		14.2	50	35.8		17.4	67.8	14.9		
PHF	.750	.647	.722	.694	.458	.733	.750	.838	.625	.779	.864	.828	.750	.759	.643	.864	.955

Counts Unlimited, Inc.
PO Box 1178
Corona, CA 92878
(951)268-6268

City of San Bernardino
N/S: F Street
E/W: 6th Street
Weather: Clear

File Name : 07_SBC_F St_6th St AM
Site Code : 20223031
Start Date : 1/11/2023
Page No : 2

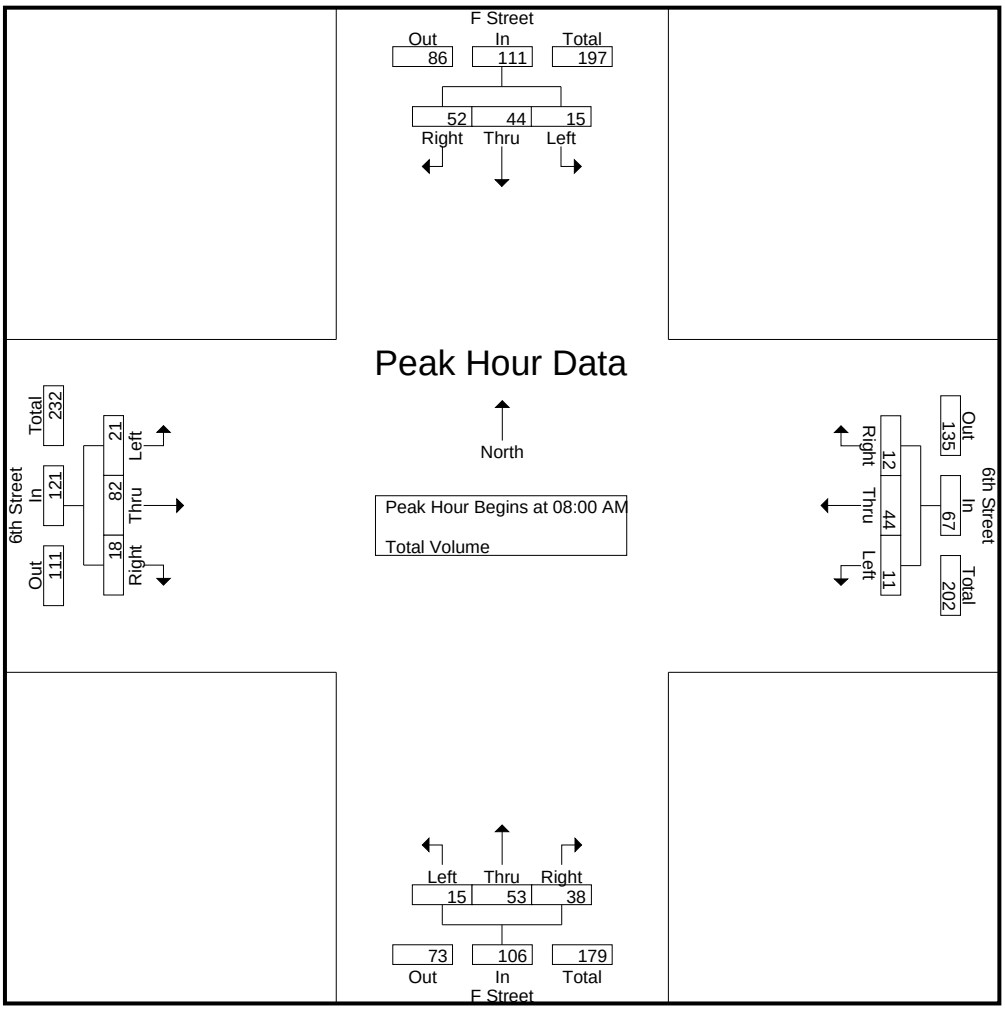

Peak Hour Analysis From 07:00 AM to 08:45 AM - Peak 1 of 1
Peak Hour for Each Approach Begins at:

	08:00 AM				08:00 AM				07:45 AM				07:45 AM			
+0 mins.	3	6	6	15	1	9	3	13	1	**24**	2	27	**11**	**28**	3	**42**
+15 mins.	**5**	11	17	33	1	9	**4**	14	**4**	17	**11**	**32**	4	27	4	35
+30 mins.	5	**17**	**18**	**40**	**6**	11	3	**20**	2	14	9	25	7	20	**7**	34
+45 mins.	2	10	11	23	3	**15**	2	20	3	11	8	22	5	11	5	21
Total Volume	15	44	52	111	11	44	12	67	10	66	30	106	27	86	19	132
% App. Total	13.5	39.6	46.8		16.4	65.7	17.9		9.4	62.3	28.3		20.5	65.2	14.4	
PHF	.750	.647	.722	.694	.458	.733	.750	.838	.625	.688	.682	.828	.614	.768	.679	.786

Counts Unlimited, Inc.
PO Box 1178
Corona, CA 92878
(951)268-6268

City of San Bernardino
N/S: F Street
E/W: 6th Street
Weather: Clear

File Name : 07_SBC_F St_6th St PM
Site Code : 20223031
Start Date : 1/11/2023
Page No : 1

Groups Printed- Total Volume

	F Street Southbound				6th Street Westbound				F Street Northbound				6th Street Eastbound				
Start Time	Left	Thru	Right	App. Total	Left	Thru	Right	App. Total	Left	Thru	Right	App. Total	Left	Thru	Right	App. Total	Int. Total
04:00 PM	0	11	9	20	4	45	4	53	6	16	6	28	2	15	3	20	121
04:15 PM	2	8	3	13	2	42	0	44	9	17	4	30	7	10	5	22	109
04:30 PM	3	22	16	41	2	57	8	67	4	14	3	21	0	12	2	14	143
04:45 PM	0	13	2	15	4	26	2	32	11	12	1	24	4	9	3	16	87
Total	5	54	30	89	12	170	14	196	30	59	14	103	13	46	13	72	460
05:00 PM	3	8	10	21	5	40	2	47	3	11	3	17	5	5	0	10	95
05:15 PM	1	6	10	17	4	32	1	37	14	13	5	32	4	10	9	23	109
05:30 PM	0	6	7	13	6	28	1	35	7	12	5	24	6	13	3	22	94
05:45 PM	0	4	7	11	0	20	2	22	13	9	4	26	4	10	7	21	80
Total	4	24	34	62	15	120	6	141	37	45	17	99	19	38	19	76	378
Grand Total	9	78	64	151	27	290	20	337	67	104	31	202	32	84	32	148	838
Apprch %	6	51.7	42.4		8	86.1	5.9		33.2	51.5	15.3		21.6	56.8	21.6		
Total %	1.1	9.3	7.6	18	3.2	34.6	2.4	40.2	8	12.4	3.7	24.1	3.8	10	3.8	17.7	

	F Street Southbound				6th Street Westbound				F Street Northbound				6th Street Eastbound				
Start Time	Left	Thru	Right	App. Total	Left	Thru	Right	App. Total	Left	Thru	Right	App. Total	Left	Thru	Right	App. Total	Int. Total
Peak Hour Analysis From 04:00 PM to 05:45 PM - Peak 1 of 1																	
Peak Hour for Entire Intersection Begins at 04:00 PM																	
04:00 PM	0	11	9	20	**4**	45	4	53	6	16	**6**	28	2	**15**	3	20	121
04:15 PM	2	8	3	13	2	42	0	44	9	**17**	4	**30**	**7**	10	**5**	**22**	109
04:30 PM	**3**	**22**	**16**	**41**	2	**57**	**8**	**67**	4	14	3	21	0	12	2	14	**143**
04:45 PM	0	13	2	15	4	26	2	32	**11**	12	1	24	4	9	3	16	87
Total Volume	5	54	30	89	12	170	14	196	30	59	14	103	13	46	13	72	460
% App. Total	5.6	60.7	33.7		6.1	86.7	7.1		29.1	57.3	13.6		18.1	63.9	18.1		
PHF	.417	.614	.469	.543	.750	.746	.438	.731	.682	.868	.583	.858	.464	.767	.650	.818	.804

Counts Unlimited, Inc.
PO Box 1178
Corona, CA 92878
(951)268-6268

City of San Bernardino
N/S: F Street
E/W: 6th Street
Weather: Clear

File Name : 07_SBC_F St_6th St PM
Site Code : 20223031
Start Date : 1/11/2023
Page No : 2

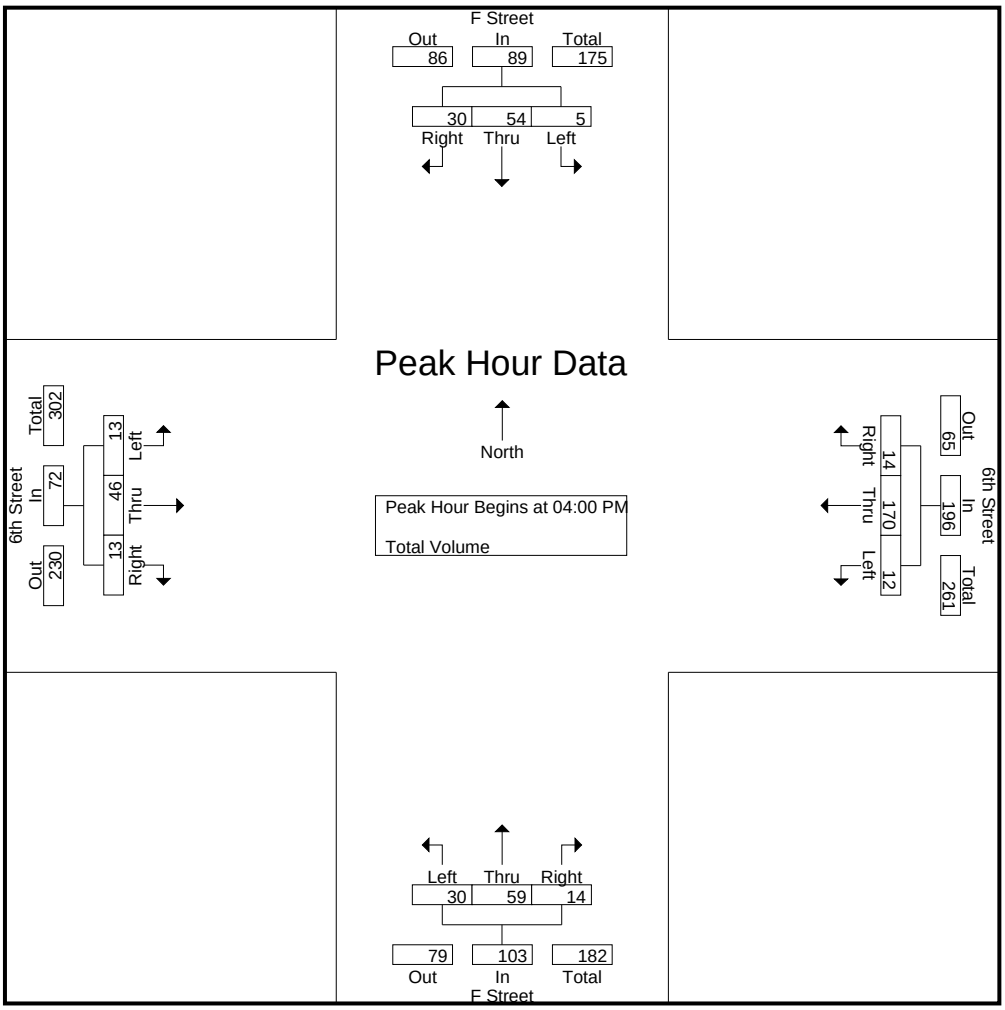

Peak Hour Analysis From 04:00 PM to 05:45 PM - Peak 1 of 1
Peak Hour for Each Approach Begins at:

	04:30 PM				04:00 PM				04:00 PM				05:00 PM			
+0 mins.	**3**	**22**	**16**	**41**	**4**	45	4	53	6	16	**6**	28	5	5	0	10
+15 mins.	0	13	2	15	2	42	0	44	9	**17**	4	**30**	4	10	**9**	**23**
+30 mins.	3	8	10	21	2	**57**	**8**	**67**	4	14	3	21	**6**	**13**	3	22
+45 mins.	1	6	10	17	4	26	2	32	**11**	12	1	24	4	10	7	21
Total Volume	7	49	38	94	12	170	14	196	30	59	14	103	19	38	19	76
% App. Total	7.4	52.1	40.4		6.1	86.7	7.1		29.1	57.3	13.6		25	50	25	
PHF	.583	.557	.594	.573	.750	.746	.438	.731	.682	.868	.583	.858	.792	.731	.528	.826

Counts Unlimited, Inc.
PO Box 1178
Corona, CA 92878
(951)268-6268

City of San Bernardino
N/S: F Street
E/W: 5th Street
Weather: Clear

File Name : 08_SBC_F St_5th St AM
Site Code : 20223031
Start Date : 1/11/2023
Page No : 1

Groups Printed- Total Volume

	F Street Southbound				5th Street Westbound				F Street Northbound				5th Street Eastbound				
Start Time	Left	Thru	Right	App. Total	Left	Thru	Right	App. Total	Left	Thru	Right	App. Total	Left	Thru	Right	App. Total	Int. Total
07:00 AM	1	2	3	6	1	128	2	131	1	2	2	5	8	249	4	261	403
07:15 AM	5	4	3	12	2	137	5	144	1	4	1	6	6	291	0	297	459
07:30 AM	3	6	3	12	0	143	3	146	0	4	2	6	12	288	1	301	465
07:45 AM	3	7	3	13	1	130	7	138	1	3	0	4	21	324	2	347	502
Total	12	19	12	43	4	538	17	559	3	13	5	21	47	1152	7	1206	1829
08:00 AM	1	3	2	6	3	130	5	138	2	6	2	10	26	333	3	362	516
08:15 AM	7	4	9	20	4	125	4	133	2	5	3	10	18	275	2	295	458
08:30 AM	5	6	13	24	2	157	4	163	1	7	2	10	21	231	2	254	451
08:45 AM	2	9	6	17	2	158	11	171	1	2	1	4	33	234	3	270	462
Total	15	22	30	67	11	570	24	605	6	20	8	34	98	1073	10	1181	1887
Grand Total	27	41	42	110	15	1108	41	1164	9	33	13	55	145	2225	17	2387	3716
Apprch %	24.5	37.3	38.2		1.3	95.2	3.5		16.4	60	23.6		6.1	93.2	0.7		
Total %	0.7	1.1	1.1	3	0.4	29.8	1.1	31.3	0.2	0.9	0.3	1.5	3.9	59.9	0.5	64.2	

	F Street Southbound				5th Street Westbound				F Street Northbound				5th Street Eastbound				
Start Time	Left	Thru	Right	App. Total	Left	Thru	Right	App. Total	Left	Thru	Right	App. Total	Left	Thru	Right	App. Total	Int. Total
Peak Hour Analysis From 07:00 AM to 08:45 AM - Peak 1 of 1																	
Peak Hour for Entire Intersection Begins at 07:15 AM																	
07:15 AM	**5**	4	**3**	12	2	137	5	144	1	4	1	6	6	291	0	297	459
07:30 AM	3	6	3	12	0	**143**	3	**146**	0	4	**2**	6	12	288	1	301	465
07:45 AM	3	**7**	3	**13**	1	130	**7**	138	1	3	0	4	21	324	2	347	502
08:00 AM	1	3	2	6	**3**	130	5	138	**2**	**6**	2	**10**	**26**	**333**	**3**	**362**	**516**
Total Volume	12	20	11	43	6	540	20	566	4	17	5	26	65	1236	6	1307	1942
% App. Total	27.9	46.5	25.6		1.1	95.4	3.5		15.4	65.4	19.2		5	94.6	0.5		
PHF	.600	.714	.917	.827	.500	.944	.714	.969	.500	.708	.625	.650	.625	.928	.500	.903	.941

Counts Unlimited, Inc.
PO Box 1178
Corona, CA 92878
(951)268-6268

City of San Bernardino
N/S: F Street
E/W: 5th Street
Weather: Clear

File Name : 08_SBC_F St_5th St AM
Site Code : 20223031
Start Date : 1/11/2023
Page No : 2

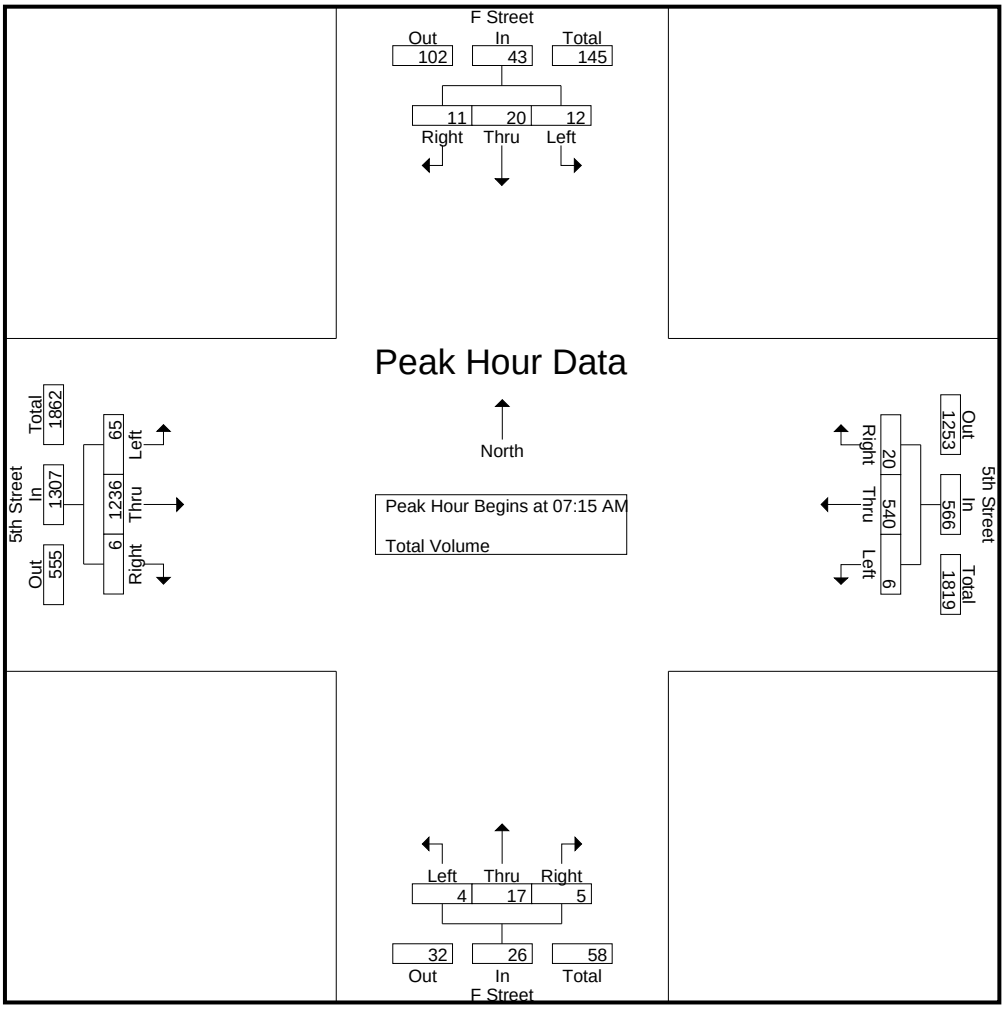

Peak Hour Analysis From 07:00 AM to 08:45 AM - Peak 1 of 1
Peak Hour for Each Approach Begins at:

	08:00 AM				08:00 AM				07:45 AM				07:15 AM			
+0 mins.	1	3	2	6	3	130	5	138	1	3	0	4	6	291	0	297
+15 mins.	**7**	4	9	20	**4**	125	4	133	**2**	6	2	**10**	12	288	1	301
+30 mins.	5	6	**13**	**24**	2	157	4	163	2	5	**3**	10	21	324	2	347
+45 mins.	2	**9**	6	17	2	**158**	**11**	**171**	1	**7**	2	10	**26**	**333**	**3**	**362**
Total Volume	15	22	30	67	11	570	24	605	6	21	7	34	65	1236	6	1307
% App. Total	22.4	32.8	44.8		1.8	94.2	4		17.6	61.8	20.6		5	94.6	0.5	
PHF	.536	.611	.577	.698	.688	.902	.545	.885	.750	.750	.583	.850	.625	.928	.500	.903

Counts Unlimited, Inc.
PO Box 1178
Corona, CA 92878
(951)268-6268

City of San Bernardino
N/S: F Street
E/W: 5th Street
Weather: Clear

File Name : 08_SBC_F St_5th St PM
Site Code : 20223031
Start Date : 1/11/2023
Page No : 1

Groups Printed- Total Volume

	F Street Southbound				5th Street Westbound				F Street Northbound				5th Street Eastbound				
Start Time	Left	Thru	Right	App. Total	Left	Thru	Right	App. Total	Left	Thru	Right	App. Total	Left	Thru	Right	App. Total	Int. Total
04:00 PM	1	4	9	14	4	240	8	252	2	8	2	12	12	179	1	192	470
04:15 PM	4	9	6	19	3	225	9	237	6	9	2	17	9	186	5	200	473
04:30 PM	4	5	19	28	4	237	11	252	5	4	3	12	10	193	2	205	497
04:45 PM	7	8	11	26	1	208	4	213	4	7	3	14	14	179	0	193	446
Total	16	26	45	87	12	910	32	954	17	28	10	55	45	737	8	790	1886
05:00 PM	4	1	5	10	4	285	7	296	3	6	4	13	13	184	4	201	520
05:15 PM	2	3	8	13	7	227	11	245	1	9	0	10	14	169	3	186	454
05:30 PM	3	3	8	14	2	239	8	249	3	5	0	8	14	135	3	152	423
05:45 PM	0	2	9	11	1	195	4	200	2	11	2	15	10	173	2	185	411
Total	9	9	30	48	14	946	30	990	9	31	6	46	51	661	12	724	1808
Grand Total	25	35	75	135	26	1856	62	1944	26	59	16	101	96	1398	20	1514	3694
Apprch %	18.5	25.9	55.6		1.3	95.5	3.2		25.7	58.4	15.8		6.3	92.3	1.3		
Total %	0.7	0.9	2	3.7	0.7	50.2	1.7	52.6	0.7	1.6	0.4	2.7	2.6	37.8	0.5	41	

	F Street Southbound				5th Street Westbound				F Street Northbound				5th Street Eastbound				
Start Time	Left	Thru	Right	App. Total	Left	Thru	Right	App. Total	Left	Thru	Right	App. Total	Left	Thru	Right	App. Total	Int. Total
Peak Hour Analysis From 04:00 PM to 05:45 PM - Peak 1 of 1																	
Peak Hour for Entire Intersection Begins at 04:15 PM																	
04:15 PM	4	**9**	6	19	3	225	9	237	**6**	**9**	2	**17**	9	186	**5**	200	473
04:30 PM	4	5	**19**	**28**	**4**	237	**11**	252	5	4	3	12	10	**193**	2	**205**	497
04:45 PM	**7**	8	11	26	1	208	4	213	4	7	3	14	**14**	179	0	193	446
05:00 PM	4	1	5	10	4	**285**	7	**296**	3	6	**4**	13	13	184	4	201	**520**
Total Volume	19	23	41	83	12	955	31	998	18	26	12	56	46	742	11	799	1936
% App. Total	22.9	27.7	49.4		1.2	95.7	3.1		32.1	46.4	21.4		5.8	92.9	1.4		
PHF	.679	.639	.539	.741	.750	.838	.705	.843	.750	.722	.750	.824	.821	.961	.550	.974	.931

Counts Unlimited, Inc.
PO Box 1178
Corona, CA 92878
(951)268-6268

City of San Bernardino
N/S: F Street
E/W: 5th Street
Weather: Clear

File Name : 08_SBC_F St_5th St PM
Site Code : 20223031
Start Date : 1/11/2023
Page No : 2

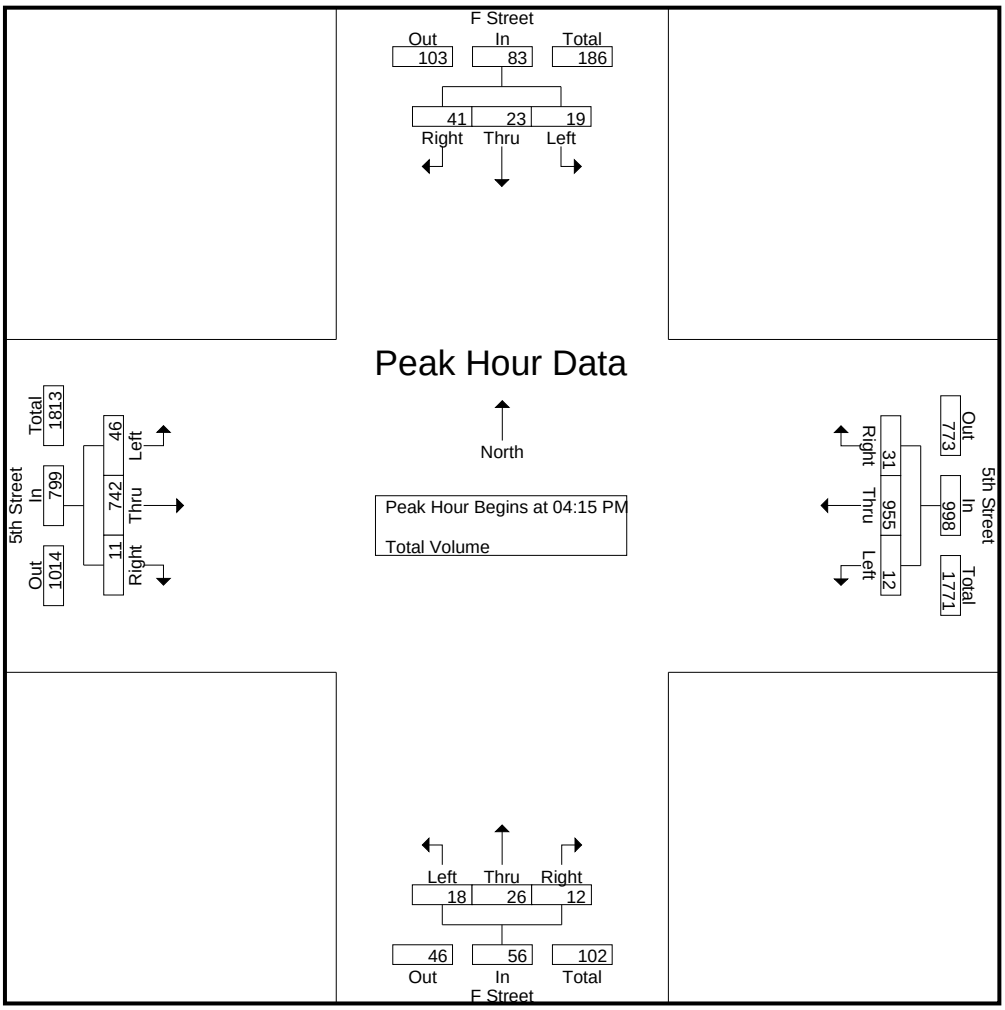

Peak Hour Analysis From 04:00 PM to 05:45 PM - Peak 1 of 1
Peak Hour for Each Approach Begins at:

	04:00 PM				04:30 PM				04:15 PM				04:15 PM			
+0 mins.	1	4	9	14	4	237	**11**	252	**6**	**9**	2	**17**	9	186	**5**	200
+15 mins.	4	**9**	6	19	1	208	4	213	5	4	3	12	10	**193**	2	**205**
+30 mins.	4	5	**19**	**28**	4	**285**	7	**296**	4	7	3	14	**14**	179	0	193
+45 mins.	**7**	8	11	26	**7**	227	11	245	3	6	**4**	13	13	184	4	201
Total Volume	16	26	45	87	16	957	33	1006	18	26	12	56	46	742	11	799
% App. Total	18.4	29.9	51.7		1.6	95.1	3.3		32.1	46.4	21.4		5.8	92.9	1.4	
PHF	.571	.722	.592	.777	.571	.839	.750	.850	.750	.722	.750	.824	.821	.961	.550	.974

Counts Unlimited, Inc.

PO Box 1178
Corona, CA 92878
Phone: (951) 268-6268
email: counts@countsunlimited.com

City of San Bernardino
5th Street
B/ H Street - E Street
24 Hour Directional Volume Count

SBC003
Site Code: 202-23031

Start Time	1/11/23 Wed	Eastbound Morning	Eastbound Afternoon	Hour Totals Morning	Hour Totals Afternoon	Westbound Morning	Westbound Afternoon	Hour Totals Morning	Hour Totals Afternoon	Combined Totals Morning	Combined Totals Afternoon
12:00		23	158			22	208				
12:15		20	196			19	214				
12:30		22	202			19	202				
12:45		19	209	84	765	23	204	83	828	167	1593
01:00		13	200			30	196				
01:15		17	190			20	180				
01:30		20	189			34	191				
01:45		17	201	67	780	24	235	108	802	175	1582
02:00		7	187			14	190				
02:15		11	**226**			18	199				
02:30		22	**231**			14	249				
02:45		25	**198**	65	842	19	234	65	872	130	1714
03:00		26	**200**			24	225				
03:15		23	198			28	209				
03:30		36	170			42	232				
03:45		41	188	126	756	34	232	128	898	254	1654
04:00		20	194			44	256				
04:15		32	182			48	**240**				
04:30		49	202			72	**257**				
04:45		48	183	149	761	38	**204**	202	957	351	1718
05:00		52	193			55	**306**				
05:15		67	176			73	239				
05:30		77	144			91	252				
05:45		114	158	310	671	82	205	301	1002	611	1673
06:00		77	165			64	187				
06:15		109	152			101	133				
06:30		139	128			105	137				
06:45		259	104	584	549	110	117	380	574	964	1123
07:00		249	101			130	122				
07:15		**295**	124			146	101				
07:30		**290**	95			144	112				
07:45		**341**	83	1175	403	135	92	555	427	1730	830
08:00		**318**	93			142	90				
08:15		276	82			140	82				
08:30		236	80			171	69				
08:45		224	72	1054	327	180	69	633	310	1687	637
09:00		213	61			145	63				
09:15		159	76			146	65				
09:30		138	59			138	60				
09:45		184	44	694	240	137	46	566	234	1260	474
10:00		169	60			153	49				
10:15		179	64			130	47				
10:30		165	49			171	44				
10:45		165	38	678	211	170	44	624	184	1302	395
11:00		184	47			**183**	42				
11:15		173	42			**167**	34				
11:30		177	41			**204**	36				
11:45		183	33	717	163	**179**	31	733	143	1450	306
Total		5703	6468	5703	6468	4378	7231	4378	7231	10081	13699
Combined Total		12171		12171		11609		11609		23780	
AM Peak	-	07:15	-	-	-	11:00	-	-	-	-	-
Vol.	-	1244	-	-	-	733	-	-	-	-	-
P.H.F.		0.912				0.898					
PM Peak	-	-	02:15	-	-	-	04:15	-	-	-	-
Vol.	-	-	855	-	-	-	1007	-	-	-	-
P.H.F.			0.925				0.823				
Percentage		46.9%	53.1%			37.7%	62.3%				
ADT/AADT		ADT 23,780		AADT 23,780							

Counts Unlimited, Inc.

PO Box 1178
Corona, CA 92878
Phone: (951) 268-6268
email: counts@countsunlimited.com

City of San Bernardino
9th Street
B/ H Street - E Street
24 Hour Directional Volume Count

SBC001
Site Code: 202-23031

Start Time	1/11/23 Wed	Eastbound Morning	Eastbound Afternoon	Hour Totals Morning	Hour Totals Afternoon	Westbound Morning	Westbound Afternoon	Hour Totals Morning	Hour Totals Afternoon	Combined Totals Morning	Combined Totals Afternoon
12:00		7	85			6	84				
12:15		4	69			7	93				
12:30		3	89			7	76				
12:45		4	62	18	305	4	65	24	318	42	623
01:00		7	74			9	73				
01:15		6	72			8	90				
01:30		6	66			7	96				
01:45		0	79	19	291	6	88	30	347	49	638
02:00		2	90			5	78				
02:15		11	99			8	105				
02:30		6	66			16	93				
02:45		10	99	29	354	12	121	41	397	70	751
03:00		9	81			12	116				
03:15		9	93			9	112				
03:30		10	**125**			10	87				
03:45		7	**104**	35	403	16	**135**	47	450	82	853
04:00		6	**86**			16	**106**				
04:15		3	**106**			17	**121**				
04:30		9	96			26	**116**				
04:45		9	99	27	387	24	105	83	448	110	835
05:00		12	82			20	127				
05:15		8	97			22	117				
05:30		16	81			41	106				
05:45		26	76	62	336	32	84	115	434	177	770
06:00		14	51			22	87				
06:15		19	54			20	62				
06:30		25	71			36	60				
06:45		36	44	94	220	43	46	121	255	215	475
07:00		53	42			58	41				
07:15		67	31			**88**	48				
07:30		**82**	19			**94**	48				
07:45		**113**	33	315	125	**86**	30	326	167	641	292
08:00		**87**	30			**66**	32				
08:15		**92**	32			82	33				
08:30		75	43			94	39				
08:45		65	23	319	128	75	37	317	141	636	269
09:00		62	15			67	9				
09:15		66	26			67	14				
09:30		43	24			54	12				
09:45		64	17	235	82	43	32	231	67	466	149
10:00		57	17			57	21				
10:15		65	12			66	11				
10:30		63	9			65	19				
10:45		53	26	238	64	70	22	258	73	496	137
11:00		50	11			69	19				
11:15		55	17			53	15				
11:30		77	18			61	9				
11:45		77	12	259	58	64	14	247	57	506	115
Total		1650	2753	1650	2753	1840	3154	1840	3154	3490	5907
Combined Total		4403		4403		4994		4994		9397	
AM Peak	-	07:30	-	-	-	07:15	-	-	-	-	-
Vol.	-	374	-	-	-	334	-	-	-	-	-
P.H.F.		0.827				0.888					
PM Peak	-	-	03:30	-	-	-	03:45	-	-	-	-
Vol.	-	-	421	-	-	-	478	-	-	-	-
P.H.F.			0.842				0.885				
Percentage		37.5%	62.5%			36.8%	63.2%				
ADT/AADT		ADT 9,397		AADT 9,397							

Counts Unlimited, Inc.

PO Box 1178
Corona, CA 92878
Phone: (951) 268-6268
email: counts@countsunlimited.com

City of San Bernardino
E Street
B/ 9th Street - 5th Street
24 Hour Directional Volume Count

SBC002
Site Code: 202-23031

Start Time	1/11/23 Wed	Northbound Morning	Northbound Afternoon	Hour Totals Morning	Hour Totals Afternoon	Southbound Morning	Southbound Afternoon	Hour Totals Morning	Hour Totals Afternoon	Combined Totals Morning	Combined Totals Afternoon
12:00		8	60			5	55				
12:15		5	53			1	54				
12:30		3	42			1	52				
12:45		2	56	18	211	7	66	14	227	32	438
01:00		3	56			4	48				
01:15		1	52			3	59				
01:30		5	57			8	54				
01:45		3	72	12	237	7	55	22	216	34	453
02:00		4	65			2	45				
02:15		3	66			2	51				
02:30		3	64			2	64				
02:45		6	51	16	246	7	64	13	224	29	470
03:00		2	58			1	69				
03:15		1	67			2	55				
03:30		1	68			2	61				
03:45		3	71	7	264	5	59	10	244	17	508
04:00		1	63			4	**81**				
04:15		1	**78**			4	**51**				
04:30		6	**83**			3	**91**				
04:45		4	**74**	12	298	8	**68**	19	291	31	589
05:00		7	**76**			10	46				
05:15		7	78			14	49				
05:30		6	71			5	48				
05:45		7	67	27	292	13	56	42	199	69	491
06:00		15	66			12	25				
06:15		7	44			9	33				
06:30		14	46			15	50				
06:45		22	37	58	193	21	29	57	137	115	330
07:00		27	27			17	33				
07:15		40	28			31	22				
07:30		51	27			47	21				
07:45		35	22	153	104	50	26	145	102	298	206
08:00		44	23			**46**	17				
08:15		48	21			**51**	21				
08:30		40	21			**53**	12				
08:45		52	18	184	83	**59**	17	209	67	393	150
09:00		40	23			43	9				
09:15		47	19			46	13				
09:30		45	9			36	14				
09:45		47	12	179	63	38	12	163	48	342	111
10:00		49	13			62	6				
10:15		46	13			35	11				
10:30		**55**	16			33	13				
10:45		**50**	17	200	59	49	9	179	39	379	98
11:00		**61**	7			42	14				
11:15		**52**	8			43	5				
11:30		41	7			58	0				
11:45		60	7	214	29	42	9	185	28	399	57
Total		1080	2079	1080	2079	1058	1822	1058	1822	2138	3901
Combined Total		3159		3159		2880		2880		6039	
AM Peak	-	10:30	-	-	-	08:00	-	-	-	-	-
Vol.	-	218	-	-	-	209	-	-	-	-	-
P.H.F.		0.893				0.886					
PM Peak	-	-	04:15	-	-	-	04:00	-	-	-	-
Vol.	-	-	311	-	-	-	291	-	-	-	-
P.H.F.			0.937				0.799				
Percentage		34.2%	65.8%			36.7%	63.3%				
ADT/AADT		ADT 6,039		AADT 6,039							

APPENDIX C

Police Station Existing Counts

City:	San Bernardino
Location:	536 West Baseline
Date:	5/9/2018
Count Type:	24 Hour Driveway Counts

	North Area		
	Entering	Exiting	Total
0:00	0	0	0
0:15	0	0	0
0:30	0	0	0
0:45	0	0	0
1:00	0	0	0
1:15	0	0	0
1:30	0	0	0
1:45	0	0	0
2:00	0	0	0
2:15	0	0	0
2:30	0	0	0
2:45	0	0	0
3:00	0	0	0
3:15	0	0	0
3:30	0	0	0
3:45	0	0	0
4:00	0	0	0
4:15	0	0	0
4:30	0	0	0
4:45	0	0	0
5:00	0	0	0
5:15	0	0	0
5:30	0	0	0
5:45	0	0	0
6:00	0	2	2
6:15	0	0	0
6:30	0	2	2
6:45	0	1	1
7:00	0	0	0
7:15	0	0	0
7:30	0	0	0
7:45	0	3	3
8:00	0	3	3
8:15	0	3	3
8:30	0	8	8
8:45	0	6	6
9:00	0	0	0
9:15	0	2	2
9:30	0	2	2
9:45	0	0	0
10:00	0	1	1
10:15	0	4	4
10:30	0	1	1
10:45	0	0	0
11:00	0	0	0
11:15	0	3	3
11:30	0	1	1
11:45	0	0	0

	South Area		
	Entering	Exiting	Total
0:00	0	0	0
0:15	0	0	0
0:30	0	0	0
0:45	0	0	0
1:00	0	0	0
1:15	0	0	0
1:30	0	0	0
1:45	0	0	0
2:00	0	0	0
2:15	0	0	0
2:30	0	0	0
2:45	0	0	0
3:00	0	0	0
3:15	0	0	0
3:30	0	0	0
3:45	0	0	0
4:00	0	0	0
4:15	0	0	0
4:30	0	0	0
4:45	0	0	0
5:00	0	0	0
5:15	2	0	2
5:30	0	0	0
5:45	0	0	0
6:00	0	1	1
6:15	0	0	0
6:30	1	0	1
6:45	1	0	1
7:00	1	0	1
7:15	2	0	2
7:30	5	0	5
7:45	3	0	3
8:00	4	0	4
8:15	2	0	2
8:30	1	0	1
8:45	3	0	3
9:00	1	0	1
9:15	4	0	4
9:30	1	0	1
9:45	2	0	2
10:00	2	0	2
10:15	3	0	3
10:30	3	0	3
10:45	2	0	2
11:00	0	0	0
11:15	1	0	1
11:30	0	0	0
11:45	0	0	0

Counts Unlimited, Inc.
PO Box 1178
Corona, CA 92878
(951) 268-6268

City:	San Bernardino
Location:	536 West Baseline
Date:	5/9/2018
Count Type:	24 Hour Driveway Counts

	North Area				South Area		
	Entering	Exiting	Total		Entering	Exiting	Total
12:00	0	0	0	12:00	0	0	0
12:15	0	0	0	12:15	0	0	0
12:30	0	0	0	12:30	2	0	2
12:45	0	0	0	12:45	2	0	2
13:00	0	0	0	13:00	0	0	0
13:15	0	1	1	13:15	1	0	1
13:30	0	0	0	13:30	0	0	0
13:45	0	0	0	13:45	1	0	1
14:00	0	1	1	14:00	0	0	0
14:15	0	0	0	14:15	1	0	1
14:30	0	1	1	14:30	0	0	0
14:45	0	0	0	14:45	0	0	0
15:00	0	3	3	15:00	0	0	0
15:15	0	2	2	15:15	1	0	1
15:30	0	3	3	15:30	1	0	1
15:45	0	1	1	15:45	3	1	4
16:00	1	2	3	16:00	0	0	0
16:15	0	2	2	16:15	0	0	0
16:30	0	0	0	16:30	2	0	2
16:45	0	0	0	16:45	1	0	1
17:00	0	1	1	17:00	1	0	1
17:15	1	2	3	17:15	2	0	2
17:30	2	2	4	17:30	1	0	1
17:45	0	4	4	17:45	6	0	6
18:00	0	0	0	18:00	1	0	1
18:15	0	1	1	18:15	0	0	0
18:30	0	3	3	18:30	0	0	0
18:45	0	0	0	18:45	0	1	1
19:00	0	0	0	19:00	0	0	0
19:15	0	0	0	19:15	0	0	0
19:30	0	0	0	19:30	1	0	1
19:45	0	0	0	19:45	0	0	0
20:00	0	0	0	20:00	0	0	0
20:15	0	0	0	20:15	0	0	0
20:30	0	0	0	20:30	0	0	0
20:45	0	0	0	20:45	0	0	0
21:00	0	0	0	21:00	0	0	0
21:15	0	0	0	21:15	0	0	0
21:30	0	0	0	21:30	0	0	0
21:45	0	0	0	21:45	0	0	0
22:00	0	0	0	22:00	0	0	0
22:15	0	0	0	22:15	0	0	0
22:30	0	0	0	22:30	0	0	0
22:45	0	0	0	22:45	0	0	0
23:00	0	0	0	23:00	0	0	0
23:15	0	0	0	23:15	0	0	0
23:30	0	0	0	23:30	0	0	0
23:45	0	0	0	23:45	0	0	0
TOTAL	**4**	**71**	**75**		**71**	**3**	**74**

Counts Unlimited, Inc.
PO Box 1178
Corona, CA 92878
(951) 268-6268

APPENDIX D

HCM 2010 Methodology Reports

Movement	EBL	EBT	EBR	WBL	WBT	WBR	NBL	NBT	NBR	SBL	SBT	SBR
Lane Configurations												
Traffic Volume (veh/h)	11	332	24	36	304	51	6	90	10	40	152	18
Future Volume (veh/h)	11	332	24	36	304	51	6	90	10	40	152	18
Number	7	4	14	3	8	18	5	2	12	1	6	16
Initial Q (Qb), veh	0	0	0	0	0	0	0	0	0	0	0	0
Ped-Bike Adj(A_pbT)	1.00		1.00	1.00		1.00	1.00		1.00	1.00		1.00
Parking Bus, Adj	1.00	1.00	1.00	1.00	1.00	1.00	1.00	1.00	1.00	1.00	1.00	1.00
Adj Sat Flow, veh/h/ln	1569	1569	1600	1569	1569	1600	1569	1569	1600	1569	1569	1600
Adj Flow Rate, veh/h	12	361	26	39	330	55	7	98	11	43	165	20
Adj No. of Lanes	1	2	0	1	2	0	1	1	0	1	1	0
Peak Hour Factor	0.92	0.92	0.92	0.92	0.92	0.92	0.92	0.92	0.92	0.92	0.92	0.92
Percent Heavy Veh, %	2	2	2	2	2	2	2	2	2	2	2	2
Cap, veh/h	360	815	58	367	768	127	133	445	50	149	456	55
Arrive On Green	0.08	0.29	0.29	0.09	0.30	0.30	0.18	0.64	0.64	0.10	0.33	0.33
Sat Flow, veh/h	1494	2821	202	1494	2562	423	1494	1386	156	1494	1373	166
Grp Volume(v), veh/h	12	190	197	39	191	194	7	0	109	43	0	185
Grp Sat Flow(s),veh/h/ln	1494	1490	1533	1494	1490	1494	1494	0	1541	1494	0	1539
Q Serve(g_s), s	0.5	9.4	9.4	1.5	9.2	9.4	0.4	0.0	2.7	2.4	0.0	8.2
Cycle Q Clear(g_c), s	0.5	9.4	9.4	1.5	9.2	9.4	0.4	0.0	2.7	2.4	0.0	8.2
Prop In Lane	1.00		0.13	1.00		0.28	1.00		0.10	1.00		0.11
Lane Grp Cap(c), veh/h	360	431	443	367	447	448	133	0	495	149	0	511
V/C Ratio(X)	0.03	0.44	0.44	0.11	0.43	0.43	0.05	0.00	0.22	0.29	0.00	0.36
Avail Cap(c_a), veh/h	360	431	443	367	447	448	133	0	495	149	0	511
HCM Platoon Ratio	1.00	1.00	1.00	1.00	1.00	1.00	2.00	2.00	2.00	1.00	1.00	1.00
Upstream Filter(I)	0.96	0.96	0.96	1.00	1.00	1.00	1.00	0.00	1.00	1.00	0.00	1.00
Uniform Delay (d), s/veh	18.6	26.1	26.1	18.4	25.3	25.3	33.9	0.0	11.4	37.5	0.0	22.8
Incr Delay (d2), s/veh	0.2	3.1	3.1	0.6	3.0	3.0	0.7	0.0	1.0	4.8	0.0	2.0
Initial Q Delay(d3),s/veh	0.0	0.0	0.0	0.0	0.0	0.0	0.0	0.0	0.0	0.0	0.0	0.0
%ile BackOfQ(50%),veh/ln	0.2	4.2	4.4	0.7	4.2	4.3	0.2	0.0	1.2	1.2	0.0	3.8
LnGrp Delay(d),s/veh	18.8	29.2	29.2	19.0	28.2	28.4	34.6	0.0	12.4	42.3	0.0	24.8
LnGrp LOS	B	C	C	B	C	C	C		B	D		C
Approach Vol, veh/h		399			424			116			228	
Approach Delay, s/veh		28.9			27.5			13.8			28.1	
Approach LOS		C			C			B			C	

Timer	1	2	3	4	5	6	7	8
Assigned Phs	1	2	3	4	5	6	7	8
Phs Duration (G+Y+Rc), s	13.0	34.0	12.0	31.0	12.0	35.0	11.0	32.0
Change Period (Y+Rc), s	4.0	5.1	4.0	5.0	4.0	5.1	4.0	5.0
Max Green Setting (Gmax), s	9.0	28.9	8.0	26.0	8.0	29.9	7.0	27.0
Max Q Clear Time (g_c+I1), s	4.4	4.7	3.5	11.4	2.4	10.2	2.5	11.4
Green Ext Time (p_c), s	0.0	0.5	0.0	1.9	0.0	0.9	0.0	2.0

Intersection Summary	
HCM 2010 Ctrl Delay	26.7
HCM 2010 LOS	C

This document was created by an application that isn't licensed to use novaPDF.
Purchase a license to generate PDF files without this notice.

Movement	EBL	EBT	EBR	WBL	WBT	WBR	NBL	NBT	NBR	SBL	SBT	SBR
Lane Configurations												
Traffic Volume (veh/h)	2	15	4	2	21	4	2	120	14	3	183	12
Future Volume (veh/h)	2	15	4	2	21	4	2	120	14	3	183	12
Number	7	4	14	3	8	18	5	2	12	1	6	16
Initial Q (Qb), veh	0	0	0	0	0	0	0	0	0	0	0	0
Ped-Bike Adj(A_pbT)	1.00		1.00	1.00		1.00	1.00		1.00	1.00		1.00
Parking Bus, Adj	1.00	1.00	1.00	1.00	1.00	1.00	1.00	1.00	1.00	1.00	1.00	1.00
Adj Sat Flow, veh/h/ln	1600	1569	1600	1600	1569	1600	1569	1569	1600	1569	1569	1600
Adj Flow Rate, veh/h	2	16	4	2	23	4	2	130	15	3	199	13
Adj No. of Lanes	0	1	0	0	1	0	1	1	0	1	1	0
Peak Hour Factor	0.92	0.92	0.92	0.92	0.92	0.92	0.92	0.92	0.92	0.92	0.92	0.92
Percent Heavy Veh, %	2	2	2	2	2	2	2	2	2	2	2	2
Cap, veh/h	48	91	21	46	98	16	133	927	107	149	994	65
Arrive On Green	0.08	0.08	0.08	0.08	0.08	0.08	0.18	1.00	1.00	0.20	1.00	1.00
Sat Flow, veh/h	55	1174	273	42	1266	209	1494	1381	159	1494	1457	95
Grp Volume(v), veh/h	22	0	0	29	0	0	2	0	145	3	0	212
Grp Sat Flow(s),veh/h/ln	1501	0	0	1517	0	0	1494	0	1541	1494	0	1552
Q Serve(g_s), s	0.0	0.0	0.0	0.0	0.0	0.0	0.1	0.0	0.0	0.1	0.0	0.0
Cycle Q Clear(g_c), s	1.2	0.0	0.0	1.6	0.0	0.0	0.1	0.0	0.0	0.1	0.0	0.0
Prop In Lane	0.09		0.18	0.07		0.14	1.00		0.10	1.00		0.06
Lane Grp Cap(c), veh/h	160	0	0	161	0	0	133	0	1034	149	0	1059
V/C Ratio(X)	0.14	0.00	0.00	0.18	0.00	0.00	0.02	0.00	0.14	0.02	0.00	0.20
Avail Cap(c_a), veh/h	495	0	0	500	0	0	183	0	1034	199	0	1059
HCM Platoon Ratio	1.00	1.00	1.00	1.00	1.00	1.00	2.00	2.00	2.00	2.00	2.00	2.00
Upstream Filter(I)	1.00	0.00	0.00	1.00	0.00	0.00	0.99	0.00	0.99	0.96	0.00	0.96
Uniform Delay (d), s/veh	38.8	0.0	0.0	39.0	0.0	0.0	33.8	0.0	0.0	32.5	0.0	0.0
Incr Delay (d2), s/veh	0.4	0.0	0.0	0.5	0.0	0.0	0.0	0.0	0.3	0.1	0.0	0.4
Initial Q Delay(d3),s/veh	0.0	0.0	0.0	0.0	0.0	0.0	0.0	0.0	0.0	0.0	0.0	0.0
%ile BackOfQ(50%),veh/ln	0.5	0.0	0.0	0.7	0.0	0.0	0.0	0.0	0.1	0.1	0.0	0.1
LnGrp Delay(d),s/veh	39.2	0.0	0.0	39.5	0.0	0.0	33.8	0.0	0.3	32.5	0.0	0.4
LnGrp LOS	D			D			C		A	C		A
Approach Vol, veh/h		22			29			147			215	
Approach Delay, s/veh		39.2			39.5			0.7			0.9	
Approach LOS		D			D			A			A	

Timer	1	2	3	4	5	6	7	8
Assigned Phs	1	2		4	5	6		8
Phs Duration (G+Y+Rc), s	13.0	65.4		11.6	12.0	66.4		11.6
Change Period (Y+Rc), s	4.0	5.0		4.6	4.0	5.0		4.6
Max Green Setting (Gmax), s	12.0	37.0		27.4	11.0	38.0		27.4
Max Q Clear Time (g_c+I1), s	2.1	2.0		3.2	2.1	2.0		3.6
Green Ext Time (p_c), s	0.0	0.8		0.1	0.0	1.3		0.1

Intersection Summary	
HCM 2010 Ctrl Delay	5.6
HCM 2010 LOS	A

This document was created by an application that isn't licensed to use novaPDF.
Purchase a license to generate PDF files without this notice.

Movement	EBL	EBT	EBR	WBL	WBT	WBR	NBL	NBT	NBR	SBL	SBT	SBR
Lane Configurations												
Traffic Volume (veh/h)	14	92	25	11	42	7	14	123	43	12	174	10
Future Volume (veh/h)	14	92	25	11	42	7	14	123	43	12	174	10
Number	7	4	14	3	8	18	5	2	12	1	6	16
Initial Q (Qb), veh	0	0	0	0	0	0	0	0	0	0	0	0
Ped-Bike Adj(A_pbT)	1.00		1.00	1.00		1.00	1.00		1.00	1.00		1.00
Parking Bus, Adj	1.00	1.00	1.00	1.00	1.00	1.00	1.00	1.00	1.00	1.00	1.00	1.00
Adj Sat Flow, veh/h/ln	1863	1863	1900	1863	1863	1900	1863	1863	1900	1863	1863	1900
Adj Flow Rate, veh/h	15	100	27	12	46	8	15	134	47	13	189	11
Adj No. of Lanes	1	2	0	1	2	0	1	1	0	1	1	0
Peak Hour Factor	0.92	0.92	0.92	0.92	0.92	0.92	0.92	0.92	0.92	0.92	0.92	0.92
Percent Heavy Veh, %	2	2	2	2	2	2	2	2	2	2	2	2
Cap, veh/h	165	216	56	133	236	40	158	879	308	177	1182	69
Arrive On Green	0.08	0.08	0.08	0.08	0.08	0.08	0.18	1.00	1.00	0.20	1.00	1.00
Sat Flow, veh/h	1345	2779	725	1258	3028	513	1774	1319	463	1774	1743	101
Grp Volume(v), veh/h	15	62	65	12	26	28	15	0	181	13	0	200
Grp Sat Flow(s),veh/h/ln	1345	1770	1735	1258	1770	1772	1774	0	1781	1774	0	1845
Q Serve(g_s), s	1.0	3.0	3.2	0.8	1.3	1.3	0.6	0.0	0.0	0.5	0.0	0.0
Cycle Q Clear(g_c), s	2.3	3.0	3.2	4.0	1.3	1.3	0.6	0.0	0.0	0.5	0.0	0.0
Prop In Lane	1.00		0.42	1.00		0.29	1.00		0.26	1.00		0.05
Lane Grp Cap(c), veh/h	165	138	135	133	138	138	158	0	1187	177	0	1250
V/C Ratio(X)	0.09	0.45	0.48	0.09	0.19	0.20	0.10	0.00	0.15	0.07	0.00	0.16
Avail Cap(c_a), veh/h	494	570	559	441	570	571	217	0	1187	237	0	1250
HCM Platoon Ratio	1.00	1.00	1.00	1.00	1.00	1.00	2.00	2.00	2.00	2.00	2.00	2.00
Upstream Filter(I)	1.00	1.00	1.00	1.00	1.00	1.00	0.98	0.00	0.98	0.99	0.00	0.99
Uniform Delay (d), s/veh	39.9	39.7	39.8	41.7	38.9	38.9	34.0	0.0	0.0	32.6	0.0	0.0
Incr Delay (d2), s/veh	0.2	2.3	2.6	0.3	0.7	0.7	0.3	0.0	0.3	0.2	0.0	0.3
Initial Q Delay(d3),s/veh	0.0	0.0	0.0	0.0	0.0	0.0	0.0	0.0	0.0	0.0	0.0	0.0
%ile BackOfQ(50%),veh/ln	0.4	1.6	1.6	0.3	0.6	0.7	0.3	0.0	0.1	0.3	0.0	0.1
LnGrp Delay(d),s/veh	40.2	42.0	42.4	42.0	39.5	39.6	34.2	0.0	0.3	32.8	0.0	0.3
LnGrp LOS	D	D	D	D	D	D	C		A	C		A
Approach Vol, veh/h		142			66			196			213	
Approach Delay, s/veh		42.0			40.0			2.9			2.3	
Approach LOS		D			D			A			A	

Timer	1	2	3	4	5	6	7	8
Assigned Phs	1	2		4	5	6		8
Phs Duration (G+Y+Rc), s	13.0	65.0		12.0	12.0	66.0		12.0
Change Period (Y+Rc), s	4.0	5.0		5.0	4.0	5.0		5.0
Max Green Setting (Gmax), s	12.0	35.0		29.0	11.0	36.0		29.0
Max Q Clear Time (g_c+I1), s	2.5	2.0		5.2	2.6	2.0		6.0
Green Ext Time (p_c), s	0.0	1.1		0.7	0.0	1.2		0.2

Intersection Summary	
HCM 2010 Ctrl Delay	15.6
HCM 2010 LOS	B

This document was created by an application that isn't licensed to use novaPDF.
Purchase a license to generate PDF files without this notice.

Movement	EBL	EBT	EBR	WBL	WBT	WBR	NBL	NBT	NBR	SBL	SBT	SBR
Lane Configurations												
Traffic Volume (veh/h)	85	1104	36	12	513	10	20	83	26	25	141	28
Future Volume (veh/h)	85	1104	36	12	513	10	20	83	26	25	141	28
Number	7	4	14	3	8	18	5	2	12	1	6	16
Initial Q (Qb), veh	0	0	0	0	0	0	0	0	0	0	0	0
Ped-Bike Adj(A_pbT)	1.00		1.00	1.00		1.00	1.00		1.00	1.00		1.00
Parking Bus, Adj	1.00	1.00	1.00	1.00	1.00	1.00	1.00	1.00	1.00	1.00	1.00	1.00
Adj Sat Flow, veh/h/ln	1863	1863	1900	1863	1863	1900	1863	1863	1900	1863	1863	1900
Adj Flow Rate, veh/h	92	1200	39	13	558	11	22	90	28	27	153	30
Adj No. of Lanes	1	2	0	1	2	0	1	1	0	1	1	0
Peak Hour Factor	0.92	0.92	0.92	0.92	0.92	0.92	0.92	0.92	0.92	0.92	0.92	0.92
Percent Heavy Veh, %	2	2	2	2	2	2	2	2	2	2	2	2
Cap, veh/h	298	1318	43	128	1337	26	75	556	173	87	627	123
Arrive On Green	0.75	0.75	0.75	0.38	0.38	0.38	0.04	0.41	0.41	0.10	0.83	0.83
Sat Flow, veh/h	839	3499	114	447	3550	70	1774	1364	424	1774	1514	297
Grp Volume(v), veh/h	92	607	632	13	278	291	22	0	118	27	0	183
Grp Sat Flow(s),veh/h/ln	839	1770	1843	447	1770	1850	1774	0	1788	1774	0	1810
Q Serve(g_s), s	6.1	24.2	24.3	2.4	10.5	10.5	1.1	0.0	3.8	1.3	0.0	2.0
Cycle Q Clear(g_c), s	16.5	24.2	24.3	26.7	10.5	10.5	1.1	0.0	3.8	1.3	0.0	2.0
Prop In Lane	1.00		0.06	1.00		0.04	1.00		0.24	1.00		0.16
Lane Grp Cap(c), veh/h	298	666	694	128	666	697	75	0	729	87	0	750
V/C Ratio(X)	0.31	0.91	0.91	0.10	0.42	0.42	0.29	0.00	0.16	0.31	0.00	0.24
Avail Cap(c_a), veh/h	327	728	758	143	728	761	189	0	729	197	0	750
HCM Platoon Ratio	2.00	2.00	2.00	1.00	1.00	1.00	1.00	1.00	1.00	2.00	2.00	2.00
Upstream Filter(I)	0.62	0.62	0.62	1.00	1.00	1.00	1.00	0.00	1.00	0.99	0.00	0.99
Uniform Delay (d), s/veh	12.2	9.9	9.9	37.0	20.7	20.8	41.8	0.0	16.9	39.2	0.0	4.7
Incr Delay (d2), s/veh	0.5	10.4	10.1	0.5	0.6	0.6	2.1	0.0	0.5	2.0	0.0	0.8
Initial Q Delay(d3),s/veh	0.0	0.0	0.0	0.0	0.0	0.0	0.0	0.0	0.0	0.0	0.0	0.0
%ile BackOfQ(50%),veh/ln	1.4	13.0	13.5	0.3	5.2	5.4	0.6	0.0	2.0	0.7	0.0	1.1
LnGrp Delay(d),s/veh	12.7	20.3	20.0	37.5	21.3	21.3	43.9	0.0	17.4	41.1	0.0	5.4
LnGrp LOS	B	C	C	D	C	C	D		B	D		A
Approach Vol, veh/h		1331			582			140			210	
Approach Delay, s/veh		19.6			21.7			21.6			10.0	
Approach LOS		B			C			C			B	

Timer	1	2	3	4	5	6	7	8
Assigned Phs	1	2		4	5	6		8
Phs Duration (G+Y+Rc), s	8.4	42.7		38.9	7.8	43.3		38.9
Change Period (Y+Rc), s	4.0	6.0		5.0	4.0	6.0		5.0
Max Green Setting (Gmax), s	10.0	28.0		37.0	9.6	28.4		37.0
Max Q Clear Time (g_c+I1), s	3.3	5.8		26.3	3.1	4.0		28.7
Green Ext Time (p_c), s	0.0	0.8		7.6	0.0	1.4		3.0

Intersection Summary	
HCM 2010 Ctrl Delay	19.4
HCM 2010 LOS	B

This document was created by an application that isn't licensed to use novaPDF.
Purchase a license to generate PDF files without this notice.

Movement	EBL	EBT	EBR	WBL	WBT	WBR	NBL	NBT	NBR	SBL	SBT	SBR
Lane Configurations												
Traffic Volume (veh/h)	7	349	63	22	284	16	8	25	10	10	64	12
Future Volume (veh/h)	7	349	63	22	284	16	8	25	10	10	64	12
Number	7	4	14	3	8	18	5	2	12	1	6	16
Initial Q (Qb), veh	0	0	0	0	0	0	0	0	0	0	0	0
Ped-Bike Adj(A_pbT)	1.00		1.00	1.00		1.00	1.00		1.00	1.00		1.00
Parking Bus, Adj	1.00	1.00	1.00	1.00	1.00	1.00	1.00	1.00	1.00	1.00	1.00	1.00
Adj Sat Flow, veh/h/ln	1900	1863	1900	1900	1863	1900	1900	1863	1900	1900	1863	1900
Adj Flow Rate, veh/h	8	379	68	24	309	17	9	27	11	11	70	13
Adj No. of Lanes	0	2	0	0	2	0	0	2	0	0	2	0
Peak Hour Factor	0.92	0.92	0.92	0.92	0.92	0.92	0.92	0.92	0.92	0.92	0.92	0.92
Percent Heavy Veh, %	2	2	2	2	2	2	2	2	2	2	2	2
Cap, veh/h	81	1229	216	128	1318	71	277	747	298	184	1009	180
Arrive On Green	0.42	0.42	0.42	0.42	0.42	0.42	0.38	0.38	0.38	0.38	0.38	0.38
Sat Flow, veh/h	16	2926	514	112	3138	169	472	1965	783	252	2655	474
Grp Volume(v), veh/h	243	0	212	182	0	168	25	0	22	50	0	44
Grp Sat Flow(s),veh/h/ln	1851	0	1604	1753	0	1665	1664	0	1557	1771	0	1611
Q Serve(g_s), s	0.0	0.0	4.4	0.0	0.0	3.3	0.0	0.0	0.4	0.0	0.0	0.9
Cycle Q Clear(g_c), s	4.3	0.0	4.4	3.1	0.0	3.3	0.4	0.0	0.4	0.9	0.0	0.9
Prop In Lane	0.03		0.32	0.13		0.10	0.36		0.50	0.22		0.29
Lane Grp Cap(c), veh/h	852	0	674	818	0	699	730	0	592	761	0	612
V/C Ratio(X)	0.28	0.00	0.32	0.22	0.00	0.24	0.03	0.00	0.04	0.07	0.00	0.07
Avail Cap(c_a), veh/h	852	0	674	818	0	699	730	0	592	761	0	612
HCM Platoon Ratio	1.00	1.00	1.00	1.00	1.00	1.00	1.00	1.00	1.00	1.00	1.00	1.00
Upstream Filter(I)	1.00	0.00	1.00	0.91	0.00	0.91	1.00	0.00	1.00	1.00	0.00	1.00
Uniform Delay (d), s/veh	9.7	0.0	9.7	9.3	0.0	9.4	9.7	0.0	9.7	9.9	0.0	9.9
Incr Delay (d2), s/veh	0.2	0.0	0.3	0.1	0.0	0.2	0.1	0.0	0.1	0.2	0.0	0.2
Initial Q Delay(d3),s/veh	0.0	0.0	0.0	0.0	0.0	0.0	0.0	0.0	0.0	0.0	0.0	0.0
%ile BackOfQ(50%),veh/ln	2.3	0.0	2.0	1.6	0.0	1.5	0.2	0.0	0.2	0.5	0.0	0.4
LnGrp Delay(d),s/veh	9.9	0.0	10.0	9.4	0.0	9.5	9.8	0.0	9.9	10.0	0.0	10.1
LnGrp LOS	A		A	A		A	A		A	B		B
Approach Vol, veh/h		455			350			47			94	
Approach Delay, s/veh		9.9			9.5			9.8			10.1	
Approach LOS		A			A			A			B	

Timer	1	2	3	4	5	6	7	8
Assigned Phs		2		4		6		8
Phs Duration (G+Y+Rc), s		24.0		26.0		24.0		26.0
Change Period (Y+Rc), s		5.0		5.0		5.0		5.0
Max Green Setting (Gmax), s		19.0		21.0		19.0		21.0
Max Q Clear Time (g_c+I1), s		2.4		6.4		2.9		5.3
Green Ext Time (p_c), s		0.1		2.4		0.3		1.8

Intersection Summary	
HCM 2010 Ctrl Delay	9.8
HCM 2010 LOS	A

This document was created by an application that isn't licensed to use novaPDF.
Purchase a license to generate PDF files without this notice.

Intersection	
Int Delay, s/veh	2.8

Movement	EBL	EBT	EBR	WBL	WBT	WBR	NBL	NBT	NBR	SBL	SBT	SBR
Lane Configurations												
Traffic Vol, veh/h	3	9	23	18	9	5	10	53	9	4	134	2
Future Vol, veh/h	3	9	23	18	9	5	10	53	9	4	134	2
Conflicting Peds, #/hr	0	0	0	0	0	0	0	0	0	0	0	0
Sign Control	Stop	Stop	Stop	Stop	Stop	Stop	Free	Free	Free	Free	Free	Free
RT Channelized	-	-	None	-	-	None	-	-	None	-	-	None
Storage Length	-	-	-	-	-	-	-	-	0	-	-	0
Veh in Median Storage, #	-	0	-	-	0	-	-	0	-	-	0	-
Grade, %	-	0	-	-	0	-	-	0	-	-	0	-
Peak Hour Factor	92	92	92	92	92	92	92	92	92	92	92	92
Heavy Vehicles, %	2	2	2	2	2	2	2	2	2	2	2	2
Mvmt Flow	3	10	25	20	10	5	11	58	10	4	146	2

Major/Minor	Minor2			Minor1			Major1			Major2		
Conflicting Flow All	247	244	146	253	236	58	148	0	0	68	0	0
Stage 1	154	154	-	80	80	-	-	-	-	-	-	-
Stage 2	93	90	-	173	156	-	-	-	-	-	-	-
Critical Hdwy	7.12	6.52	6.22	7.12	6.52	6.22	4.12	-	-	4.12	-	-
Critical Hdwy Stg 1	6.12	5.52	-	6.12	5.52	-	-	-	-	-	-	-
Critical Hdwy Stg 2	6.12	5.52	-	6.12	5.52	-	-	-	-	-	-	-
Follow-up Hdwy	3.518	4.018	3.318	3.518	4.018	3.318	2.218	-	-	2.218	-	-
Pot Cap-1 Maneuver	707	658	901	700	665	1008	1434	-	-	1533	-	-
Stage 1	848	770	-	929	828	-	-	-	-	-	-	-
Stage 2	914	820	-	829	769	-	-	-	-	-	-	-
Platoon blocked, %								-	-		-	-
Mov Cap-1 Maneuver	689	651	901	667	658	1008	1434	-	-	1533	-	-
Mov Cap-2 Maneuver	689	651	-	667	658	-	-	-	-	-	-	-
Stage 1	841	768	-	922	821	-	-	-	-	-	-	-
Stage 2	891	813	-	793	767	-	-	-	-	-	-	-

Approach	EB	WB	NB	SB
HCM Control Delay, s	9.7	10.4	1	0.2
HCM LOS	A	B		

Minor Lane/Major Mvmt	NBL	NBT	NBR	EBLn1	WBLn1	SBL	SBT	SBR
Capacity (veh/h)	1434	-	-	801	701	1533	-	-
HCM Lane V/C Ratio	0.008	-	-	0.047	0.05	0.003	-	-
HCM Control Delay (s)	7.5	0	-	9.7	10.4	7.4	0	-
HCM Lane LOS	A	A	-	A	B	A	A	-
HCM 95th %tile Q(veh)	0	-	-	0.1	0.2	0	-	-

This document was created by an application that isn't licensed to use novaPDF.
Purchase a license to generate PDF files without this notice.

Movement	EBL	EBT	EBR	WBL	WBT	WBR	NBL	NBT	NBR	SBL	SBT	SBR
Lane Configurations												
Traffic Volume (veh/h)	21	82	18	11	44	12	15	53	38	15	44	52
Future Volume (veh/h)	21	82	18	11	44	12	15	53	38	15	44	52
Number	7	4	14	3	8	18	5	2	12	1	6	16
Initial Q (Qb), veh	0	0	0	0	0	0	0	0	0	0	0	0
Ped-Bike Adj(A_pbT)	1.00		1.00	1.00		1.00	1.00		1.00	1.00		1.00
Parking Bus, Adj	1.00	1.00	1.00	1.00	1.00	1.00	1.00	1.00	1.00	1.00	1.00	1.00
Adj Sat Flow, veh/h/ln	1863	1863	1863	1863	1863	1863	1900	1863	1900	1900	1863	1900
Adj Flow Rate, veh/h	23	89	20	12	48	13	16	58	41	16	48	57
Adj No. of Lanes	1	1	1	1	1	1	0	2	0	0	2	0
Peak Hour Factor	0.92	0.92	0.92	0.92	0.92	0.92	0.92	0.92	0.92	0.92	0.92	0.92
Percent Heavy Veh, %	2	2	2	2	2	2	2	2	2	2	2	2
Cap, veh/h	712	820	697	671	820	697	209	669	435	202	546	548
Arrive On Green	0.44	0.44	0.44	0.44	0.44	0.44	0.38	0.38	0.38	0.38	0.38	0.38
Sat Flow, veh/h	1336	1863	1583	1279	1863	1583	311	1760	1144	295	1436	1441
Grp Volume(v), veh/h	23	89	20	12	48	13	61	0	54	64	0	57
Grp Sat Flow(s),veh/h/ln	1336	1863	1583	1279	1863	1583	1722	0	1493	1732	0	1441
Q Serve(g_s), s	0.5	1.4	0.4	0.3	0.7	0.2	0.0	0.0	1.2	0.0	0.0	1.3
Cycle Q Clear(g_c), s	1.2	1.4	0.4	1.7	0.7	0.2	1.1	0.0	1.2	1.1	0.0	1.3
Prop In Lane	1.00		1.00	1.00		1.00	0.26		0.77	0.25		1.00
Lane Grp Cap(c), veh/h	712	820	697	671	820	697	745	0	567	748	0	548
V/C Ratio(X)	0.03	0.11	0.03	0.02	0.06	0.02	0.08	0.00	0.09	0.09	0.00	0.10
Avail Cap(c_a), veh/h	712	820	697	671	820	697	745	0	567	748	0	548
HCM Platoon Ratio	1.00	1.00	1.00	1.00	1.00	1.00	1.00	1.00	1.00	1.00	1.00	1.00
Upstream Filter(I)	1.00	1.00	1.00	0.99	0.99	0.99	1.00	0.00	1.00	1.00	0.00	1.00
Uniform Delay (d), s/veh	8.4	8.2	7.9	8.7	8.0	7.9	9.9	0.0	10.0	10.0	0.0	10.0
Incr Delay (d2), s/veh	0.0	0.0	0.0	0.0	0.0	0.0	0.2	0.0	0.3	0.2	0.0	0.4
Initial Q Delay(d3),s/veh	0.0	0.0	0.0	0.0	0.0	0.0	0.0	0.0	0.0	0.0	0.0	0.0
%ile BackOfQ(50%),veh/ln	0.2	0.7	0.2	0.1	0.4	0.1	0.6	0.0	0.5	0.6	0.0	0.6
LnGrp Delay(d),s/veh	8.4	8.3	7.9	8.7	8.1	7.9	10.2	0.0	10.3	10.2	0.0	10.4
LnGrp LOS	A	A	A	A	A	A	B		B	B		B
Approach Vol, veh/h		132			73			115			121	
Approach Delay, s/veh		8.2			8.1			10.2			10.3	
Approach LOS		A			A			B			B	

Timer	1	2	3	4	5	6	7	8
Assigned Phs		2		4		6		8
Phs Duration (G+Y+Rc), s		23.5		26.5		23.5		26.5
Change Period (Y+Rc), s		4.5		4.5		4.5		4.5
Max Green Setting (Gmax), s		19.0		22.0		19.0		22.0
Max Q Clear Time (g_c+I1), s		3.2		3.4		3.3		3.7
Green Ext Time (p_c), s		0.3		0.3		0.3		0.1

Intersection Summary	
HCM 2010 Ctrl Delay	9.3
HCM 2010 LOS	A

This document was created by an application that isn't licensed to use novaPDF.
Purchase a license to generate PDF files without this notice.

Movement	EBL	EBT	EBR	WBL	WBT	WBR	NBL	NBT	NBR	SBL	SBT	SBR
Lane Configurations												
Traffic Volume (veh/h)	65	1236	6	6	540	20	4	17	5	12	20	11
Future Volume (veh/h)	65	1236	6	6	540	20	4	17	5	12	20	11
Number	7	4	14	3	8	18	5	2	12	1	6	16
Initial Q (Qb), veh	0	0	0	0	0	0	0	0	0	0	0	0
Ped-Bike Adj(A_pbT)	1.00		1.00	1.00		1.00	1.00		1.00	1.00		1.00
Parking Bus, Adj	1.00	1.00	1.00	1.00	1.00	1.00	1.00	1.00	1.00	1.00	1.00	1.00
Adj Sat Flow, veh/h/ln	1863	1863	1900	1863	1863	1900	1900	1863	1900	1900	1863	1900
Adj Flow Rate, veh/h	71	1343	7	7	587	22	4	18	5	13	22	12
Adj No. of Lanes	1	2	0	1	2	0	0	2	0	0	2	0
Peak Hour Factor	0.92	0.92	0.92	0.92	0.92	0.92	0.92	0.92	0.92	0.92	0.92	0.92
Percent Heavy Veh, %	2	2	2	2	2	2	2	2	2	2	2	2
Cap, veh/h	366	1672	9	138	1611	60	226	965	265	393	644	359
Arrive On Green	0.46	0.46	0.46	0.46	0.46	0.46	0.43	0.43	0.43	0.43	0.43	0.43
Sat Flow, veh/h	809	3610	19	402	3479	130	411	2267	622	781	1514	843
Grp Volume(v), veh/h	71	658	692	7	298	311	14	0	13	25	0	22
Grp Sat Flow(s),veh/h/ln	809	1770	1859	402	1770	1840	1714	0	1585	1592	0	1546
Q Serve(g_s), s	5.6	28.6	28.6	1.4	9.8	9.8	0.0	0.0	0.4	0.0	0.0	0.7
Cycle Q Clear(g_c), s	15.4	28.6	28.6	30.0	9.8	9.8	0.4	0.0	0.4	0.7	0.0	0.7
Prop In Lane	1.00		0.01	1.00		0.07	0.28		0.39	0.52		0.55
Lane Grp Cap(c), veh/h	366	820	861	138	820	852	781	0	675	738	0	658
V/C Ratio(X)	0.19	0.80	0.80	0.05	0.36	0.36	0.02	0.00	0.02	0.03	0.00	0.03
Avail Cap(c_a), veh/h	477	1062	1116	193	1062	1104	781	0	675	738	0	658
HCM Platoon Ratio	1.00	1.00	1.00	1.00	1.00	1.00	1.00	1.00	1.00	1.00	1.00	1.00
Upstream Filter(I)	1.00	1.00	1.00	0.95	0.95	0.95	1.00	0.00	1.00	1.00	0.00	1.00
Uniform Delay (d), s/veh	20.6	20.6	20.7	33.5	15.6	15.6	15.0	0.0	15.0	15.0	0.0	15.1
Incr Delay (d2), s/veh	0.3	3.5	3.3	0.1	0.3	0.2	0.0	0.0	0.1	0.1	0.0	0.1
Initial Q Delay(d3),s/veh	0.0	0.0	0.0	0.0	0.0	0.0	0.0	0.0	0.0	0.0	0.0	0.0
%ile BackOfQ(50%),veh/ln	1.3	14.7	15.4	0.2	4.9	5.1	0.2	0.0	0.2	0.4	0.0	0.3
LnGrp Delay(d),s/veh	20.8	24.1	24.0	33.6	15.9	15.9	15.0	0.0	15.0	15.1	0.0	15.2
LnGrp LOS	C	C	C	C	B	B	B		B	B		B
Approach Vol, veh/h		1421			616			27			47	
Approach Delay, s/veh		23.9			16.1			15.0			15.1	
Approach LOS		C			B			B			B	

Timer	1	2	3	4	5	6	7	8
Assigned Phs		2		4		6		8
Phs Duration (G+Y+Rc), s		43.3		46.7		43.3		46.7
Change Period (Y+Rc), s		5.0		5.0		5.0		5.0
Max Green Setting (Gmax), s		26.0		54.0		26.0		54.0
Max Q Clear Time (g_c+I1), s		2.4		30.6		2.7		32.0
Green Ext Time (p_c), s		0.1		11.1		0.2		3.9

Intersection Summary	
HCM 2010 Ctrl Delay	21.3
HCM 2010 LOS	C

This document was created by an application that isn't licensed to use novaPDF.
Purchase a license to generate PDF files without this notice.

Movement	EBL	EBT	EBR	WBL	WBT	WBR	NBL	NBT	NBR	SBL	SBT	SBR
Lane Configurations												
Traffic Volume (veh/h)	36	329	22	29	395	53	25	243	33	38	170	28
Future Volume (veh/h)	36	329	22	29	395	53	25	243	33	38	170	28
Number	7	4	14	3	8	18	5	2	12	1	6	16
Initial Q (Qb), veh	0	0	0	0	0	0	0	0	0	0	0	0
Ped-Bike Adj(A_pbT)	1.00		1.00	1.00		1.00	1.00		1.00	1.00		1.00
Parking Bus, Adj	1.00	1.00	1.00	1.00	1.00	1.00	1.00	1.00	1.00	1.00	1.00	1.00
Adj Sat Flow, veh/h/ln	1569	1569	1600	1569	1569	1600	1569	1569	1600	1569	1569	1600
Adj Flow Rate, veh/h	39	358	24	32	429	58	27	264	36	41	185	30
Adj No. of Lanes	1	2	0	1	2	0	1	1	0	1	1	0
Peak Hour Factor	0.92	0.92	0.92	0.92	0.92	0.92	0.92	0.92	0.92	0.92	0.92	0.92
Percent Heavy Veh, %	2	2	2	2	2	2	2	2	2	2	2	2
Cap, veh/h	311	788	53	358	763	103	133	449	61	149	452	73
Arrive On Green	0.08	0.28	0.28	0.09	0.29	0.29	0.18	0.66	0.66	0.10	0.34	0.34
Sat Flow, veh/h	1494	2836	189	1494	2641	355	1494	1352	184	1494	1317	214
Grp Volume(v), veh/h	39	187	195	32	241	246	27	0	300	41	0	215
Grp Sat Flow(s),veh/h/ln	1494	1490	1535	1494	1490	1506	1494	0	1536	1494	0	1531
Q Serve(g_s), s	1.6	9.4	9.4	1.2	12.3	12.5	1.4	0.0	9.7	2.3	0.0	9.7
Cycle Q Clear(g_c), s	1.6	9.4	9.4	1.2	12.3	12.5	1.4	0.0	9.7	2.3	0.0	9.7
Prop In Lane	1.00		0.12	1.00		0.24	1.00		0.12	1.00		0.14
Lane Grp Cap(c), veh/h	311	414	426	358	431	435	133	0	510	149	0	526
V/C Ratio(X)	0.13	0.45	0.46	0.09	0.56	0.57	0.20	0.00	0.59	0.27	0.00	0.41
Avail Cap(c_a), veh/h	311	414	426	358	431	435	133	0	510	149	0	526
HCM Platoon Ratio	1.00	1.00	1.00	1.00	1.00	1.00	2.00	2.00	2.00	1.00	1.00	1.00
Upstream Filter(I)	0.96	0.96	0.96	1.00	1.00	1.00	0.96	0.00	0.96	1.00	0.00	1.00
Uniform Delay (d), s/veh	20.0	26.8	26.9	19.0	27.1	27.2	34.3	0.0	11.7	37.5	0.0	22.6
Incr Delay (d2), s/veh	0.8	3.4	3.3	0.5	5.2	5.2	3.3	0.0	4.7	4.5	0.0	2.3
Initial Q Delay(d3),s/veh	0.0	0.0	0.0	0.0	0.0	0.0	0.0	0.0	0.0	0.0	0.0	0.0
%ile BackOfQ(50%),veh/ln	0.7	4.2	4.4	0.6	5.7	5.8	0.7	0.0	4.7	1.1	0.0	4.4
LnGrp Delay(d),s/veh	20.8	30.2	30.2	19.5	32.3	32.4	37.6	0.0	16.4	42.0	0.0	24.9
LnGrp LOS	C	C	C	B	C	C	D		B	D		C
Approach Vol, veh/h		421			519			327			256	
Approach Delay, s/veh		29.4			31.6			18.2			27.7	
Approach LOS		C			C			B			C	

Timer	1	2	3	4	5	6	7	8
Assigned Phs	1	2	3	4	5	6	7	8
Phs Duration (G+Y+Rc), s	13.0	35.0	12.0	30.0	12.0	36.0	11.0	31.0
Change Period (Y+Rc), s	4.0	5.1	4.0	5.0	4.0	5.1	4.0	5.0
Max Green Setting (Gmax), s	9.0	29.9	8.0	25.0	8.0	30.9	7.0	26.0
Max Q Clear Time (g_c+I1), s	4.3	11.7	3.2	11.4	3.4	11.7	3.6	14.5
Green Ext Time (p_c), s	0.0	1.6	0.0	1.8	0.0	1.1	0.0	2.2

Intersection Summary	
HCM 2010 Ctrl Delay	27.4
HCM 2010 LOS	C

This document was created by an application that isn't licensed to use novaPDF.
Purchase a license to generate PDF files without this notice.

Movement	EBL	EBT	EBR	WBL	WBT	WBR	NBL	NBT	NBR	SBL	SBT	SBR
Lane Configurations												
Traffic Volume (veh/h)	17	25	11	9	23	14	17	277	9	4	217	8
Future Volume (veh/h)	17	25	11	9	23	14	17	277	9	4	217	8
Number	7	4	14	3	8	18	5	2	12	1	6	16
Initial Q (Qb), veh	0	0	0	0	0	0	0	0	0	0	0	0
Ped-Bike Adj(A_pbT)	1.00		1.00	1.00		1.00	1.00		1.00	1.00		1.00
Parking Bus, Adj	1.00	1.00	1.00	1.00	1.00	1.00	1.00	1.00	1.00	1.00	1.00	1.00
Adj Sat Flow, veh/h/ln	1600	1569	1600	1600	1569	1600	1569	1569	1600	1569	1569	1600
Adj Flow Rate, veh/h	18	27	12	10	25	15	18	301	10	4	236	9
Adj No. of Lanes	0	1	0	0	1	0	1	1	0	1	1	0
Peak Hour Factor	0.92	0.92	0.92	0.92	0.92	0.92	0.92	0.92	0.92	0.92	0.92	0.92
Percent Heavy Veh, %	2	2	2	2	2	2	2	2	2	2	2	2
Cap, veh/h	76	64	23	61	66	34	133	1013	34	149	1024	39
Arrive On Green	0.08	0.08	0.08	0.08	0.08	0.08	0.18	1.00	1.00	0.20	1.00	1.00
Sat Flow, veh/h	303	823	300	166	844	433	1494	1510	50	1494	1501	57
Grp Volume(v), veh/h	57	0	0	50	0	0	18	0	311	4	0	245
Grp Sat Flow(s),veh/h/ln	1426	0	0	1442	0	0	1494	0	1560	1494	0	1559
Q Serve(g_s), s	0.4	0.0	0.0	0.0	0.0	0.0	0.9	0.0	0.0	0.2	0.0	0.0
Cycle Q Clear(g_c), s	3.3	0.0	0.0	2.9	0.0	0.0	0.9	0.0	0.0	0.2	0.0	0.0
Prop In Lane	0.32		0.21	0.20		0.30	1.00		0.03	1.00		0.04
Lane Grp Cap(c), veh/h	164	0	0	160	0	0	133	0	1047	149	0	1063
V/C Ratio(X)	0.35	0.00	0.00	0.31	0.00	0.00	0.14	0.00	0.30	0.03	0.00	0.23
Avail Cap(c_a), veh/h	472	0	0	476	0	0	166	0	1047	183	0	1063
HCM Platoon Ratio	1.00	1.00	1.00	1.00	1.00	1.00	2.00	2.00	2.00	2.00	2.00	2.00
Upstream Filter(I)	1.00	0.00	0.00	1.00	0.00	0.00	0.98	0.00	0.98	0.94	0.00	0.94
Uniform Delay (d), s/veh	39.8	0.0	0.0	39.6	0.0	0.0	34.1	0.0	0.0	32.5	0.0	0.0
Incr Delay (d2), s/veh	1.3	0.0	0.0	1.1	0.0	0.0	0.4	0.0	0.7	0.1	0.0	0.5
Initial Q Delay(d3),s/veh	0.0	0.0	0.0	0.0	0.0	0.0	0.0	0.0	0.0	0.0	0.0	0.0
%ile BackOfQ(50%),veh/ln	1.4	0.0	0.0	1.2	0.0	0.0	0.4	0.0	0.2	0.1	0.0	0.1
LnGrp Delay(d),s/veh	41.0	0.0	0.0	40.7	0.0	0.0	34.5	0.0	0.7	32.5	0.0	0.5
LnGrp LOS	D			D			C		A	C		A
Approach Vol, veh/h		57			50			329			249	
Approach Delay, s/veh		41.0			40.7			2.6			1.0	
Approach LOS		D			D			A			A	

Timer	1	2	3	4	5	6	7	8
Assigned Phs	1	2		4	5	6		8
Phs Duration (G+Y+Rc), s	13.0	65.4		11.6	12.0	66.4		11.6
Change Period (Y+Rc), s	4.0	5.0		4.6	4.0	5.0		4.6
Max Green Setting (Gmax), s	11.0	38.0		27.4	10.0	39.0		27.4
Max Q Clear Time (g_c+I1), s	2.2	2.0		5.3	2.9	2.0		4.9
Green Ext Time (p_c), s	0.0	2.0		0.2	0.0	1.5		0.2

Intersection Summary	
HCM 2010 Ctrl Delay	8.0
HCM 2010 LOS	A

This document was created by an application that isn't licensed to use novaPDF.
Purchase a license to generate PDF files without this notice.

Movement	EBL	EBT	EBR	WBL	WBT	WBR	NBL	NBT	NBR	SBL	SBT	SBR
Lane Configurations												
Traffic Volume (veh/h)	6	49	8	42	153	11	19	267	19	14	239	24
Future Volume (veh/h)	6	49	8	42	153	11	19	267	19	14	239	24
Number	7	4	14	3	8	18	5	2	12	1	6	16
Initial Q (Qb), veh	0	0	0	0	0	0	0	0	0	0	0	0
Ped-Bike Adj(A_pbT)	1.00		1.00	1.00		1.00	1.00		1.00	1.00		1.00
Parking Bus, Adj	1.00	1.00	1.00	1.00	1.00	1.00	1.00	1.00	1.00	1.00	1.00	1.00
Adj Sat Flow, veh/h/ln	1863	1863	1900	1863	1863	1900	1863	1863	1900	1863	1863	1900
Adj Flow Rate, veh/h	7	53	9	46	166	12	21	290	21	15	260	26
Adj No. of Lanes	1	2	0	1	2	0	1	1	0	1	1	0
Peak Hour Factor	0.92	0.92	0.92	0.92	0.92	0.92	0.92	0.92	0.92	0.92	0.92	0.92
Percent Heavy Veh, %	2	2	2	2	2	2	2	2	2	2	2	2
Cap, veh/h	123	255	42	170	281	20	158	1134	82	177	1119	112
Arrive On Green	0.08	0.08	0.08	0.08	0.08	0.08	0.18	1.00	1.00	0.20	1.00	1.00
Sat Flow, veh/h	1201	3040	504	1335	3350	240	1774	1717	124	1774	1667	167
Grp Volume(v), veh/h	7	30	32	46	87	91	21	0	311	15	0	286
Grp Sat Flow(s),veh/h/ln	1201	1770	1774	1335	1770	1820	1774	0	1841	1774	0	1833
Q Serve(g_s), s	0.5	1.4	1.5	3.0	4.3	4.3	0.9	0.0	0.0	0.6	0.0	0.0
Cycle Q Clear(g_c), s	4.8	1.4	1.5	4.5	4.3	4.3	0.9	0.0	0.0	0.6	0.0	0.0
Prop In Lane	1.00		0.28	1.00		0.13	1.00		0.07	1.00		0.09
Lane Grp Cap(c), veh/h	123	149	149	170	149	153	158	0	1216	177	0	1231
V/C Ratio(X)	0.06	0.20	0.21	0.27	0.59	0.59	0.13	0.00	0.26	0.08	0.00	0.23
Avail Cap(c_a), veh/h	409	570	572	488	570	587	217	0	1216	217	0	1231
HCM Platoon Ratio	1.00	1.00	1.00	1.00	1.00	1.00	2.00	2.00	2.00	2.00	2.00	2.00
Upstream Filter(I)	1.00	1.00	1.00	1.00	1.00	1.00	0.91	0.00	0.91	0.98	0.00	0.98
Uniform Delay (d), s/veh	42.1	38.4	38.4	40.5	39.7	39.7	34.1	0.0	0.0	32.6	0.0	0.0
Incr Delay (d2), s/veh	0.2	0.7	0.7	0.8	3.6	3.7	0.3	0.0	0.5	0.2	0.0	0.4
Initial Q Delay(d3),s/veh	0.0	0.0	0.0	0.0	0.0	0.0	0.0	0.0	0.0	0.0	0.0	0.0
%ile BackOfQ(50%),veh/ln	0.2	0.7	0.8	1.1	2.2	2.3	0.4	0.0	0.2	0.3	0.0	0.1
LnGrp Delay(d),s/veh	42.3	39.1	39.1	41.4	43.3	43.4	34.4	0.0	0.5	32.8	0.0	0.4
LnGrp LOS	D	D	D	D	D	D	C		A	C		A
Approach Vol, veh/h		69			224			332			301	
Approach Delay, s/veh		39.4			43.0			2.6			2.0	
Approach LOS		D			D			A			A	

Timer	1	2	3	4	5	6	7	8
Assigned Phs	1	2		4	5	6		8
Phs Duration (G+Y+Rc), s	13.0	64.4		12.6	12.0	65.4		12.6
Change Period (Y+Rc), s	4.0	5.0		5.0	4.0	5.0		5.0
Max Green Setting (Gmax), s	11.0	36.0		29.0	11.0	36.0		29.0
Max Q Clear Time (g_c+I1), s	2.6	2.0		6.8	2.9	2.0		6.5
Green Ext Time (p_c), s	0.0	2.0		0.3	0.0	1.8		1.1

Intersection Summary	
HCM 2010 Ctrl Delay	14.9
HCM 2010 LOS	B

This document was created by an application that isn't licensed to use novaPDF.
Purchase a license to generate PDF files without this notice.

Movement	EBL	EBT	EBR	WBL	WBT	WBR	NBL	NBT	NBR	SBL	SBT	SBR
Lane Configurations												
Traffic Volume (veh/h)	21	703	36	30	885	31	69	259	46	40	163	53
Future Volume (veh/h)	21	703	36	30	885	31	69	259	46	40	163	53
Number	7	4	14	3	8	18	5	2	12	1	6	16
Initial Q (Qb), veh	0	0	0	0	0	0	0	0	0	0	0	0
Ped-Bike Adj(A_pbT)	1.00		1.00	1.00		1.00	1.00		1.00	1.00		1.00
Parking Bus, Adj	1.00	1.00	1.00	1.00	1.00	1.00	1.00	1.00	1.00	1.00	1.00	1.00
Adj Sat Flow, veh/h/ln	1863	1863	1900	1863	1863	1900	1863	1863	1900	1863	1863	1900
Adj Flow Rate, veh/h	23	764	39	33	962	34	75	282	50	43	177	58
Adj No. of Lanes	1	2	0	1	2	0	1	1	0	1	1	0
Peak Hour Factor	0.92	0.92	0.92	0.92	0.92	0.92	0.92	0.92	0.92	0.92	0.92	0.92
Percent Heavy Veh, %	2	2	2	2	2	2	2	2	2	2	2	2
Cap, veh/h	137	1195	61	233	1217	43	150	645	114	117	538	176
Arrive On Green	0.70	0.70	0.70	0.35	0.35	0.35	0.08	0.42	0.42	0.13	0.80	0.80
Sat Flow, veh/h	563	3427	175	675	3487	123	1774	1541	273	1774	1344	441
Grp Volume(v), veh/h	23	394	409	33	488	508	75	0	332	43	0	235
Grp Sat Flow(s),veh/h/ln	563	1770	1832	675	1770	1841	1774	0	1815	1774	0	1785
Q Serve(g_s), s	3.2	10.9	11.0	3.6	22.3	22.3	3.6	0.0	11.7	2.0	0.0	3.2
Cycle Q Clear(g_c), s	25.5	10.9	11.0	14.5	22.3	22.3	3.6	0.0	11.7	2.0	0.0	3.2
Prop In Lane	1.00		0.10	1.00		0.07	1.00		0.15	1.00		0.25
Lane Grp Cap(c), veh/h	137	617	639	233	617	642	150	0	760	117	0	714
V/C Ratio(X)	0.17	0.64	0.64	0.14	0.79	0.79	0.50	0.00	0.44	0.37	0.00	0.33
Avail Cap(c_a), veh/h	159	688	712	260	688	716	189	0	760	197	0	714
HCM Platoon Ratio	2.00	2.00	2.00	1.00	1.00	1.00	1.00	1.00	1.00	2.00	2.00	2.00
Upstream Filter(I)	0.84	0.84	0.84	1.00	1.00	1.00	1.00	0.00	1.00	0.98	0.00	0.98
Uniform Delay (d), s/veh	22.4	10.5	10.5	28.3	26.3	26.3	39.4	0.0	18.6	37.4	0.0	5.7
Incr Delay (d2), s/veh	0.7	1.7	1.7	0.4	6.2	6.0	2.6	0.0	1.8	1.9	0.0	1.2
Initial Q Delay(d3),s/veh	0.0	0.0	0.0	0.0	0.0	0.0	0.0	0.0	0.0	0.0	0.0	0.0
%ile BackOfQ(50%),veh/ln	0.5	5.3	5.5	0.7	11.9	12.3	1.9	0.0	6.2	1.0	0.0	1.7
LnGrp Delay(d),s/veh	23.1	12.3	12.2	28.7	32.5	32.3	41.9	0.0	20.4	39.2	0.0	6.9
LnGrp LOS	C	B	B	C	C	C	D		C	D		A
Approach Vol, veh/h		826			1029			407			278	
Approach Delay, s/veh		12.5			32.3			24.4			11.9	
Approach LOS		B			C			C			B	

Timer	1	2	3	4	5	6	7	8
Assigned Phs	1	2		4	5	6		8
Phs Duration (G+Y+Rc), s	9.9	43.7		36.4	11.6	42.0		36.4
Change Period (Y+Rc), s	4.0	6.0		5.0	4.0	6.0		5.0
Max Green Setting (Gmax), s	10.0	30.0		35.0	9.6	30.4		35.0
Max Q Clear Time (g_c+I1), s	4.0	13.7		27.5	5.6	5.2		24.3
Green Ext Time (p_c), s	0.0	2.5		3.9	0.0	2.0		6.2

Intersection Summary	
HCM 2010 Ctrl Delay	22.4
HCM 2010 LOS	C

This document was created by an application that isn't licensed to use novaPDF.
Purchase a license to generate PDF files without this notice.

Movement	EBL	EBT	EBR	WBL	WBT	WBR	NBL	NBT	NBR	SBL	SBT	SBR
Lane Configurations												
Traffic Volume (veh/h)	12	364	28	8	439	18	33	63	14	9	25	20
Future Volume (veh/h)	12	364	28	8	439	18	33	63	14	9	25	20
Number	7	4	14	3	8	18	5	2	12	1	6	16
Initial Q (Qb), veh	0	0	0	0	0	0	0	0	0	0	0	0
Ped-Bike Adj(A_pbT)	1.00		1.00	1.00		1.00	1.00		1.00	1.00		1.00
Parking Bus, Adj	1.00	1.00	1.00	1.00	1.00	1.00	1.00	1.00	1.00	1.00	1.00	1.00
Adj Sat Flow, veh/h/ln	1900	1863	1900	1900	1863	1900	1900	1863	1900	1900	1863	1900
Adj Flow Rate, veh/h	13	396	30	9	477	20	36	68	15	10	27	22
Adj No. of Lanes	0	2	0	0	2	0	0	2	0	0	2	0
Peak Hour Factor	0.92	0.92	0.92	0.92	0.92	0.92	0.92	0.92	0.92	0.92	0.92	0.92
Percent Heavy Veh, %	2	2	2	2	2	2	2	2	2	2	2	2
Cap, veh/h	89	1349	100	82	1412	58	414	739	168	249	600	453
Arrive On Green	0.42	0.42	0.42	0.42	0.42	0.42	0.38	0.38	0.38	0.38	0.38	0.38
Sat Flow, veh/h	32	3211	238	17	3361	139	793	1945	441	405	1580	1191
Grp Volume(v), veh/h	231	0	208	266	0	240	64	0	55	32	0	27
Grp Sat Flow(s),veh/h/ln	1828	0	1653	1847	0	1671	1562	0	1617	1692	0	1485
Q Serve(g_s), s	0.0	0.0	4.2	0.0	0.0	4.9	0.0	0.0	1.1	0.0	0.0	0.6
Cycle Q Clear(g_c), s	4.1	0.0	4.2	4.8	0.0	4.9	1.1	0.0	1.1	0.5	0.0	0.6
Prop In Lane	0.06		0.14	0.03		0.08	0.56		0.27	0.32		0.80
Lane Grp Cap(c), veh/h	844	0	694	850	0	702	706	0	615	738	0	564
V/C Ratio(X)	0.27	0.00	0.30	0.31	0.00	0.34	0.09	0.00	0.09	0.04	0.00	0.05
Avail Cap(c_a), veh/h	844	0	694	850	0	702	706	0	615	738	0	564
HCM Platoon Ratio	1.00	1.00	1.00	1.00	1.00	1.00	1.00	1.00	1.00	1.00	1.00	1.00
Upstream Filter(I)	1.00	0.00	1.00	0.82	0.00	0.82	1.00	0.00	1.00	1.00	0.00	1.00
Uniform Delay (d), s/veh	9.6	0.0	9.6	9.8	0.0	9.8	10.0	0.0	9.9	9.8	0.0	9.8
Incr Delay (d2), s/veh	0.2	0.0	0.2	0.2	0.0	0.2	0.3	0.0	0.3	0.1	0.0	0.2
Initial Q Delay(d3),s/veh	0.0	0.0	0.0	0.0	0.0	0.0	0.0	0.0	0.0	0.0	0.0	0.0
%ile BackOfQ(50%),veh/ln	2.1	0.0	2.0	2.5	0.0	2.2	0.6	0.0	0.5	0.3	0.0	0.3
LnGrp Delay(d),s/veh	9.8	0.0	9.9	10.0	0.0	10.1	10.2	0.0	10.2	9.9	0.0	10.0
LnGrp LOS	A		A	A		B	B		B	A		A
Approach Vol, veh/h		439			506			119			59	
Approach Delay, s/veh		9.8			10.0			10.2			9.9	
Approach LOS		A			B			B			A	

Timer	1	2	3	4	5	6	7	8
Assigned Phs		2		4		6		8
Phs Duration (G+Y+Rc), s		24.0		26.0		24.0		26.0
Change Period (Y+Rc), s		5.0		5.0		5.0		5.0
Max Green Setting (Gmax), s		19.0		21.0		19.0		21.0
Max Q Clear Time (g_c+I1), s		3.1		6.2		2.6		6.9
Green Ext Time (p_c), s		0.5		2.3		0.2		2.6

Intersection Summary	
HCM 2010 Ctrl Delay	10.0
HCM 2010 LOS	A

This document was created by an application that isn't licensed to use novaPDF.
Purchase a license to generate PDF files without this notice.

Intersection	
Int Delay, s/veh	4.3

Movement	EBL	EBT	EBR	WBL	WBT	WBR	NBL	NBT	NBR	SBL	SBT	SBR
Lane Configurations												
Traffic Vol, veh/h	3	12	7	16	25	26	13	84	5	11	34	11
Future Vol, veh/h	3	12	7	16	25	26	13	84	5	11	34	11
Conflicting Peds, #/hr	0	0	0	0	0	0	0	0	0	0	0	0
Sign Control	Stop	Stop	Stop	Stop	Stop	Stop	Free	Free	Free	Free	Free	Free
RT Channelized	-	-	None	-	-	None	-	-	None	-	-	None
Storage Length	-	-	-	-	-	-	-	-	0	-	-	0
Veh in Median Storage, #	-	0	-	-	0	-	-	0	-	-	0	-
Grade, %	-	0	-	-	0	-	-	0	-	-	0	-
Peak Hour Factor	92	92	92	92	92	92	92	92	92	92	92	92
Heavy Vehicles, %	2	2	2	2	2	2	2	2	2	2	2	2
Mvmt Flow	3	13	8	17	27	28	14	91	5	12	37	12

Major/Minor	Minor2			Minor1			Major1			Major2		
Conflicting Flow All	210	185	37	197	192	91	49	0	0	96	0	0
Stage 1	61	61	-	119	119	-	-	-	-	-	-	-
Stage 2	149	124	-	78	73	-	-	-	-	-	-	-
Critical Hdwy	7.12	6.52	6.22	7.12	6.52	6.22	4.12	-	-	4.12	-	-
Critical Hdwy Stg 1	6.12	5.52	-	6.12	5.52	-	-	-	-	-	-	-
Critical Hdwy Stg 2	6.12	5.52	-	6.12	5.52	-	-	-	-	-	-	-
Follow-up Hdwy	3.518	4.018	3.318	3.518	4.018	3.318	2.218	-	-	2.218	-	-
Pot Cap-1 Maneuver	747	709	1035	762	703	967	1558	-	-	1498	-	-
Stage 1	950	844	-	885	797	-	-	-	-	-	-	-
Stage 2	854	793	-	931	834	-	-	-	-	-	-	-
Platoon blocked, %								-	-		-	-
Mov Cap-1 Maneuver	694	696	1035	735	690	967	1558	-	-	1498	-	-
Mov Cap-2 Maneuver	694	696	-	735	690	-	-	-	-	-	-	-
Stage 1	941	837	-	876	789	-	-	-	-	-	-	-
Stage 2	792	785	-	902	827	-	-	-	-	-	-	-

Approach	EB	WB	NB	SB
HCM Control Delay, s	9.8	10	0.9	1.5
HCM LOS	A	B		

Minor Lane/Major Mvmt	NBL	NBT	NBR	EBLn1	WBLn1	SBL	SBT	SBR
Capacity (veh/h)	1558	-	-	777	789	1498	-	-
HCM Lane V/C Ratio	0.009	-	-	0.031	0.092	0.008	-	-
HCM Control Delay (s)	7.3	0	-	9.8	10	7.4	0	-
HCM Lane LOS	A	A	-	A	B	A	A	-
HCM 95th %tile Q(veh)	0	-	-	0.1	0.3	0	-	-

This document was created by an application that isn't licensed to use novaPDF.
Purchase a license to generate PDF files without this notice.

Movement	EBL	EBT	EBR	WBL	WBT	WBR	NBL	NBT	NBR	SBL	SBT	SBR
Lane Configurations												
Traffic Volume (veh/h)	13	46	13	12	170	14	30	59	14	5	54	30
Future Volume (veh/h)	13	46	13	12	170	14	30	59	14	5	54	30
Number	7	4	14	3	8	18	5	2	12	1	6	16
Initial Q (Qb), veh	0	0	0	0	0	0	0	0	0	0	0	0
Ped-Bike Adj(A_pbT)	1.00		1.00	1.00		1.00	1.00		1.00	1.00		1.00
Parking Bus, Adj	1.00	1.00	1.00	1.00	1.00	1.00	1.00	1.00	1.00	1.00	1.00	1.00
Adj Sat Flow, veh/h/ln	1863	1863	1863	1863	1863	1863	1900	1863	1900	1900	1863	1900
Adj Flow Rate, veh/h	14	50	14	13	185	15	33	64	15	5	59	33
Adj No. of Lanes	1	1	1	1	1	1	0	2	0	0	2	0
Peak Hour Factor	0.92	0.92	0.92	0.92	0.92	0.92	0.92	0.92	0.92	0.92	0.92	0.92
Percent Heavy Veh, %	2	2	2	2	2	2	2	2	2	2	2	2
Cap, veh/h	589	820	697	710	820	697	398	732	177	105	828	415
Arrive On Green	0.44	0.44	0.44	0.44	0.44	0.44	0.38	0.38	0.38	0.38	0.38	0.38
Sat Flow, veh/h	1178	1863	1583	1332	1863	1583	755	1927	466	68	2178	1091
Grp Volume(v), veh/h	14	50	14	13	185	15	60	0	52	52	0	45
Grp Sat Flow(s),veh/h/ln	1178	1863	1583	1332	1863	1583	1535	0	1613	1834	0	1503
Q Serve(g_s), s	0.4	0.8	0.2	0.3	3.1	0.3	0.0	0.0	1.0	0.0	0.0	1.0
Cycle Q Clear(g_c), s	3.5	0.8	0.2	1.1	3.1	0.3	1.0	0.0	1.0	0.9	0.0	1.0
Prop In Lane	1.00		1.00	1.00		1.00	0.55		0.29	0.10		0.73
Lane Grp Cap(c), veh/h	589	820	697	710	820	697	695	0	613	776	0	571
V/C Ratio(X)	0.02	0.06	0.02	0.02	0.23	0.02	0.09	0.00	0.08	0.07	0.00	0.08
Avail Cap(c_a), veh/h	589	820	697	710	820	697	695	0	613	776	0	571
HCM Platoon Ratio	1.00	1.00	1.00	1.00	1.00	1.00	1.00	1.00	1.00	1.00	1.00	1.00
Upstream Filter(I)	1.00	1.00	1.00	0.91	0.91	0.91	0.96	0.00	0.96	1.00	0.00	1.00
Uniform Delay (d), s/veh	9.8	8.1	7.9	8.4	8.7	7.9	9.9	0.0	9.9	9.9	0.0	9.9
Incr Delay (d2), s/veh	0.0	0.0	0.0	0.0	0.0	0.0	0.2	0.0	0.3	0.2	0.0	0.3
Initial Q Delay(d3),s/veh	0.0	0.0	0.0	0.0	0.0	0.0	0.0	0.0	0.0	0.0	0.0	0.0
%ile BackOfQ(50%),veh/ln	0.1	0.4	0.1	0.1	1.6	0.1	0.6	0.0	0.5	0.5	0.0	0.4
LnGrp Delay(d),s/veh	9.8	8.1	7.9	8.4	8.8	7.9	10.2	0.0	10.2	10.0	0.0	10.2
LnGrp LOS	A	A	A	A	A	A	B		B	B		B
Approach Vol, veh/h		78			213			112			97	
Approach Delay, s/veh		8.3			8.7			10.2			10.1	
Approach LOS		A			A			B			B	

Timer	1	2	3	4	5	6	7	8
Assigned Phs		2		4		6		8
Phs Duration (G+Y+Rc), s		23.5		26.5		23.5		26.5
Change Period (Y+Rc), s		4.5		4.5		4.5		4.5
Max Green Setting (Gmax), s		19.0		22.0		19.0		22.0
Max Q Clear Time (g_c+I1), s		3.0		5.5		3.0		5.1
Green Ext Time (p_c), s		0.3		0.1		0.2		0.6

Intersection Summary	
HCM 2010 Ctrl Delay	9.2
HCM 2010 LOS	A

This document was created by an application that isn't licensed to use novaPDF.
Purchase a license to generate PDF files without this notice.

Movement	EBL	EBT	EBR	WBL	WBT	WBR	NBL	NBT	NBR	SBL	SBT	SBR
Lane Configurations												
Traffic Volume (veh/h)	59	694	34	9	964	16	23	30	13	18	35	74
Future Volume (veh/h)	59	694	34	9	964	16	23	30	13	18	35	74
Number	7	4	14	3	8	18	5	2	12	1	6	16
Initial Q (Qb), veh	0	0	0	0	0	0	0	0	0	0	0	0
Ped-Bike Adj(A_pbT)	1.00		1.00	1.00		1.00	1.00		1.00	1.00		1.00
Parking Bus, Adj	1.00	1.00	1.00	1.00	1.00	1.00	1.00	1.00	1.00	1.00	1.00	1.00
Adj Sat Flow, veh/h/ln	1863	1863	1900	1863	1863	1900	1900	1863	1900	1900	1863	1900
Adj Flow Rate, veh/h	64	754	37	10	1048	17	25	33	14	20	38	80
Adj No. of Lanes	1	2	0	1	2	0	0	2	0	0	2	0
Peak Hour Factor	0.92	0.92	0.92	0.92	0.92	0.92	0.92	0.92	0.92	0.92	0.92	0.92
Percent Heavy Veh, %	2	2	2	2	2	2	2	2	2	2	2	2
Cap, veh/h	184	1488	73	267	1544	25	469	649	292	289	525	657
Arrive On Green	0.43	0.43	0.43	0.43	0.43	0.43	0.46	0.46	0.46	0.46	0.46	0.46
Sat Flow, veh/h	528	3434	168	683	3564	58	882	1424	640	516	1153	1441
Grp Volume(v), veh/h	64	388	403	10	520	545	37	0	35	58	0	80
Grp Sat Flow(s),veh/h/ln	528	1770	1833	683	1770	1853	1364	0	1582	1668	0	1441
Q Serve(g_s), s	10.0	14.3	14.4	1.0	21.2	21.2	0.1	0.0	1.1	0.0	0.0	2.9
Cycle Q Clear(g_c), s	31.2	14.3	14.4	15.3	21.2	21.2	2.9	0.0	1.1	1.6	0.0	2.9
Prop In Lane	1.00		0.09	1.00		0.03	0.67		0.40	0.34		1.00
Lane Grp Cap(c), veh/h	184	767	794	267	767	802	688	0	721	814	0	657
V/C Ratio(X)	0.35	0.51	0.51	0.04	0.68	0.68	0.05	0.00	0.05	0.07	0.00	0.12
Avail Cap(c_a), veh/h	266	1042	1079	373	1042	1091	688	0	721	814	0	657
HCM Platoon Ratio	1.00	1.00	1.00	1.00	1.00	1.00	1.00	1.00	1.00	1.00	1.00	1.00
Upstream Filter(I)	1.00	1.00	1.00	0.62	0.62	0.62	1.00	0.00	1.00	1.00	0.00	1.00
Uniform Delay (d), s/veh	33.0	18.5	18.5	24.1	20.5	20.5	13.6	0.0	13.6	13.8	0.0	14.1
Incr Delay (d2), s/veh	1.1	0.5	0.5	0.0	0.7	0.6	0.2	0.0	0.1	0.2	0.0	0.4
Initial Q Delay(d3),s/veh	0.0	0.0	0.0	0.0	0.0	0.0	0.0	0.0	0.0	0.0	0.0	0.0
%ile BackOfQ(50%),veh/ln	1.5	7.1	7.4	0.2	10.4	10.9	0.5	0.0	0.5	0.8	0.0	1.2
LnGrp Delay(d),s/veh	34.1	19.0	19.0	24.1	21.1	21.1	13.8	0.0	13.8	13.9	0.0	14.5
LnGrp LOS	C	B	B	C	C	C	B		B	B		B
Approach Vol, veh/h		855			1075			72			138	
Approach Delay, s/veh		20.2			21.2			13.8			14.3	
Approach LOS		C			C			B			B	

Timer	1	2	3	4	5	6	7	8
Assigned Phs		2		4		6		8
Phs Duration (G+Y+Rc), s		46.0		44.0		46.0		44.0
Change Period (Y+Rc), s		5.0		5.0		5.0		5.0
Max Green Setting (Gmax), s		27.0		53.0		27.0		53.0
Max Q Clear Time (g_c+I1), s		4.9		33.2		4.9		23.2
Green Ext Time (p_c), s		0.3		5.8		0.7		8.4

Intersection Summary	
HCM 2010 Ctrl Delay	20.1
HCM 2010 LOS	C

This document was created by an application that isn't licensed to use novaPDF.
Purchase a license to generate PDF files without this notice.

Movement	EBL	EBT	EBR	WBL	WBT	WBR	NBL	NBT	NBR	SBL	SBT	SBR
Lane Configurations												
Traffic Volume (veh/h)	12	353	26	39	323	55	7	96	11	43	162	20
Future Volume (veh/h)	12	353	26	39	323	55	7	96	11	43	162	20
Number	7	4	14	3	8	18	5	2	12	1	6	16
Initial Q (Qb), veh	0	0	0	0	0	0	0	0	0	0	0	0
Ped-Bike Adj(A_pbT)	1.00		1.00	1.00		1.00	1.00		1.00	1.00		1.00
Parking Bus, Adj	1.00	1.00	1.00	1.00	1.00	1.00	1.00	1.00	1.00	1.00	1.00	1.00
Adj Sat Flow, veh/h/ln	1569	1569	1600	1569	1569	1600	1569	1569	1600	1569	1569	1600
Adj Flow Rate, veh/h	13	384	28	42	351	60	8	104	12	47	176	22
Adj No. of Lanes	1	2	0	1	2	0	1	1	0	1	1	0
Peak Hour Factor	0.92	0.92	0.92	0.92	0.92	0.92	0.92	0.92	0.92	0.92	0.92	0.92
Percent Heavy Veh, %	2	2	2	2	2	2	2	2	2	2	2	2
Cap, veh/h	349	814	59	357	765	130	133	444	51	149	454	57
Arrive On Green	0.08	0.29	0.29	0.09	0.30	0.30	0.18	0.64	0.64	0.10	0.33	0.33
Sat Flow, veh/h	1494	2818	205	1494	2551	432	1494	1381	159	1494	1368	171
Grp Volume(v), veh/h	13	202	210	42	204	207	8	0	116	47	0	198
Grp Sat Flow(s),veh/h/ln	1494	1490	1533	1494	1490	1492	1494	0	1541	1494	0	1538
Q Serve(g_s), s	0.5	10.1	10.1	1.6	10.0	10.2	0.4	0.0	2.9	2.6	0.0	8.9
Cycle Q Clear(g_c), s	0.5	10.1	10.1	1.6	10.0	10.2	0.4	0.0	2.9	2.6	0.0	8.9
Prop In Lane	1.00		0.13	1.00		0.29	1.00		0.10	1.00		0.11
Lane Grp Cap(c), veh/h	349	431	443	357	447	448	133	0	495	149	0	511
V/C Ratio(X)	0.04	0.47	0.47	0.12	0.46	0.46	0.06	0.00	0.23	0.31	0.00	0.39
Avail Cap(c_a), veh/h	349	431	443	357	447	448	133	0	495	149	0	511
HCM Platoon Ratio	1.00	1.00	1.00	1.00	1.00	1.00	2.00	2.00	2.00	1.00	1.00	1.00
Upstream Filter(I)	0.95	0.95	0.95	1.00	1.00	1.00	0.99	0.00	0.99	1.00	0.00	1.00
Uniform Delay (d), s/veh	18.7	26.3	26.4	18.5	25.5	25.6	33.9	0.0	11.4	37.6	0.0	23.0
Incr Delay (d2), s/veh	0.2	3.5	3.4	0.7	3.3	3.4	0.9	0.0	1.1	5.4	0.0	2.2
Initial Q Delay(d3),s/veh	0.0	0.0	0.0	0.0	0.0	0.0	0.0	0.0	0.0	0.0	0.0	0.0
%ile BackOfQ(50%),veh/ln	0.2	4.5	4.7	0.7	4.5	4.6	0.2	0.0	1.3	1.3	0.0	4.1
LnGrp Delay(d),s/veh	18.9	29.8	29.8	19.2	28.9	29.0	34.7	0.0	12.5	43.1	0.0	25.2
LnGrp LOS	B	C	C	B	C	C	C		B	D		C
Approach Vol, veh/h		425			453			124			245	
Approach Delay, s/veh		29.5			28.0			14.0			28.7	
Approach LOS		C			C			B			C	

Timer	1	2	3	4	5	6	7	8
Assigned Phs	1	2	3	4	5	6	7	8
Phs Duration (G+Y+Rc), s	13.0	34.0	12.0	31.0	12.0	35.0	11.0	32.0
Change Period (Y+Rc), s	4.0	5.1	4.0	5.0	4.0	5.1	4.0	5.0
Max Green Setting (Gmax), s	9.0	28.9	8.0	26.0	8.0	29.9	7.0	27.0
Max Q Clear Time (g_c+I1), s	4.6	4.9	3.6	12.1	2.4	10.9	2.5	12.2
Green Ext Time (p_c), s	0.0	0.6	0.0	2.0	0.0	1.0	0.0	2.1

Intersection Summary	
HCM 2010 Ctrl Delay	27.2
HCM 2010 LOS	C

This document was created by an application that isn't licensed to use novaPDF.
Purchase a license to generate PDF files without this notice.

Movement	EBL	EBT	EBR	WBL	WBT	WBR	NBL	NBT	NBR	SBL	SBT	SBR
Lane Configurations												
Traffic Volume (veh/h)	3	16	5	3	23	5	3	128	15	4	195	13
Future Volume (veh/h)	3	16	5	3	23	5	3	128	15	4	195	13
Number	7	4	14	3	8	18	5	2	12	1	6	16
Initial Q (Qb), veh	0	0	0	0	0	0	0	0	0	0	0	0
Ped-Bike Adj(A_pbT)	1.00		1.00	1.00		1.00	1.00		1.00	1.00		1.00
Parking Bus, Adj	1.00	1.00	1.00	1.00	1.00	1.00	1.00	1.00	1.00	1.00	1.00	1.00
Adj Sat Flow, veh/h/ln	1600	1569	1600	1600	1569	1600	1569	1569	1600	1569	1569	1600
Adj Flow Rate, veh/h	3	17	5	3	25	5	3	139	16	4	212	14
Adj No. of Lanes	0	1	0	0	1	0	1	1	0	1	1	0
Peak Hour Factor	0.92	0.92	0.92	0.92	0.92	0.92	0.92	0.92	0.92	0.92	0.92	0.92
Percent Heavy Veh, %	2	2	2	2	2	2	2	2	2	2	2	2
Cap, veh/h	51	87	23	48	95	18	133	927	107	149	993	66
Arrive On Green	0.08	0.08	0.08	0.08	0.08	0.08	0.18	1.00	1.00	0.20	1.00	1.00
Sat Flow, veh/h	77	1114	298	59	1220	228	1494	1382	159	1494	1456	96
Grp Volume(v), veh/h	25	0	0	33	0	0	3	0	155	4	0	226
Grp Sat Flow(s),veh/h/ln	1489	0	0	1508	0	0	1494	0	1541	1494	0	1552
Q Serve(g_s), s	0.0	0.0	0.0	0.0	0.0	0.0	0.1	0.0	0.0	0.2	0.0	0.0
Cycle Q Clear(g_c), s	1.4	0.0	0.0	1.8	0.0	0.0	0.1	0.0	0.0	0.2	0.0	0.0
Prop In Lane	0.12		0.20	0.09		0.15	1.00		0.10	1.00		0.06
Lane Grp Cap(c), veh/h	161	0	0	161	0	0	133	0	1034	149	0	1059
V/C Ratio(X)	0.16	0.00	0.00	0.21	0.00	0.00	0.02	0.00	0.15	0.03	0.00	0.21
Avail Cap(c_a), veh/h	490	0	0	497	0	0	183	0	1034	199	0	1059
HCM Platoon Ratio	1.00	1.00	1.00	1.00	1.00	1.00	2.00	2.00	2.00	2.00	2.00	2.00
Upstream Filter(I)	1.00	0.00	0.00	1.00	0.00	0.00	0.99	0.00	0.99	0.80	0.00	0.80
Uniform Delay (d), s/veh	38.9	0.0	0.0	39.1	0.0	0.0	33.8	0.0	0.0	32.5	0.0	0.0
Incr Delay (d2), s/veh	0.4	0.0	0.0	0.6	0.0	0.0	0.1	0.0	0.3	0.1	0.0	0.4
Initial Q Delay(d3),s/veh	0.0	0.0	0.0	0.0	0.0	0.0	0.0	0.0	0.0	0.0	0.0	0.0
%ile BackOfQ(50%),veh/ln	0.6	0.0	0.0	0.8	0.0	0.0	0.1	0.0	0.1	0.1	0.0	0.1
LnGrp Delay(d),s/veh	39.4	0.0	0.0	39.7	0.0	0.0	33.8	0.0	0.3	32.5	0.0	0.4
LnGrp LOS	D			D			C		A	C		A
Approach Vol, veh/h		25			33			158			230	
Approach Delay, s/veh		39.4			39.7			0.9			0.9	
Approach LOS		D			D			A			A	

Timer	1	2	3	4	5	6	7	8
Assigned Phs	1	2		4	5	6		8
Phs Duration (G+Y+Rc), s	13.0	65.4		11.6	12.0	66.4		11.6
Change Period (Y+Rc), s	4.0	5.0		4.6	4.0	5.0		4.6
Max Green Setting (Gmax), s	12.0	37.0		27.4	11.0	38.0		27.4
Max Q Clear Time (g_c+I1), s	2.2	2.0		3.4	2.1	2.0		3.8
Green Ext Time (p_c), s	0.0	0.9		0.1	0.0	1.4		0.1

Intersection Summary	
HCM 2010 Ctrl Delay	6.0
HCM 2010 LOS	A

This document was created by an application that isn't licensed to use novaPDF.
Purchase a license to generate PDF files without this notice.

Movement	EBL	EBT	EBR	WBL	WBT	WBR	NBL	NBT	NBR	SBL	SBT	SBR
Lane Configurations												
Traffic Volume (veh/h)	15	98	27	12	45	8	15	131	46	13	185	11
Future Volume (veh/h)	15	98	27	12	45	8	15	131	46	13	185	11
Number	7	4	14	3	8	18	5	2	12	1	6	16
Initial Q (Qb), veh	0	0	0	0	0	0	0	0	0	0	0	0
Ped-Bike Adj(A_pbT)	1.00		1.00	1.00		1.00	1.00		1.00	1.00		1.00
Parking Bus, Adj	1.00	1.00	1.00	1.00	1.00	1.00	1.00	1.00	1.00	1.00	1.00	1.00
Adj Sat Flow, veh/h/ln	1863	1863	1900	1863	1863	1900	1863	1863	1900	1863	1863	1900
Adj Flow Rate, veh/h	16	107	29	13	49	9	16	142	50	14	201	12
Adj No. of Lanes	1	2	0	1	2	0	1	1	0	1	1	0
Peak Hour Factor	0.92	0.92	0.92	0.92	0.92	0.92	0.92	0.92	0.92	0.92	0.92	0.92
Percent Heavy Veh, %	2	2	2	2	2	2	2	2	2	2	2	2
Cap, veh/h	163	216	57	129	233	42	158	878	309	177	1180	70
Arrive On Green	0.08	0.08	0.08	0.08	0.08	0.08	0.18	1.00	1.00	0.20	1.00	1.00
Sat Flow, veh/h	1340	2776	728	1248	3001	537	1774	1317	464	1774	1740	104
Grp Volume(v), veh/h	16	67	69	13	28	30	16	0	192	14	0	213
Grp Sat Flow(s),veh/h/ln	1340	1770	1734	1248	1770	1768	1774	0	1781	1774	0	1844
Q Serve(g_s), s	1.0	3.3	3.4	0.9	1.4	1.4	0.7	0.0	0.0	0.6	0.0	0.0
Cycle Q Clear(g_c), s	2.4	3.3	3.4	4.4	1.4	1.4	0.7	0.0	0.0	0.6	0.0	0.0
Prop In Lane	1.00		0.42	1.00		0.30	1.00		0.26	1.00		0.06
Lane Grp Cap(c), veh/h	163	138	135	129	138	138	158	0	1187	177	0	1250
V/C Ratio(X)	0.10	0.49	0.51	0.10	0.21	0.22	0.10	0.00	0.16	0.08	0.00	0.17
Avail Cap(c_a), veh/h	491	570	559	434	570	570	217	0	1187	217	0	1250
HCM Platoon Ratio	1.00	1.00	1.00	1.00	1.00	1.00	2.00	2.00	2.00	2.00	2.00	2.00
Upstream Filter(I)	1.00	1.00	1.00	1.00	1.00	1.00	0.98	0.00	0.98	0.99	0.00	0.99
Uniform Delay (d), s/veh	40.1	39.8	39.9	42.0	38.9	38.9	34.0	0.0	0.0	32.6	0.0	0.0
Incr Delay (d2), s/veh	0.3	2.6	3.0	0.3	0.7	0.8	0.3	0.0	0.3	0.2	0.0	0.3
Initial Q Delay(d3),s/veh	0.0	0.0	0.0	0.0	0.0	0.0	0.0	0.0	0.0	0.0	0.0	0.0
%ile BackOfQ(50%),veh/ln	0.4	1.7	1.8	0.3	0.7	0.7	0.3	0.0	0.1	0.3	0.0	0.1
LnGrp Delay(d),s/veh	40.3	42.4	42.8	42.3	39.6	39.7	34.3	0.0	0.3	32.8	0.0	0.3
LnGrp LOS	D	D	D	D	D	D	C		A	C		A
Approach Vol, veh/h		152			71			208			227	
Approach Delay, s/veh		42.4			40.1			2.9			2.3	
Approach LOS		D			D			A			A	

Timer	1	2	3	4	5	6	7	8
Assigned Phs	1	2		4	5	6		8
Phs Duration (G+Y+Rc), s	13.0	65.0		12.0	12.0	66.0		12.0
Change Period (Y+Rc), s	4.0	5.0		5.0	4.0	5.0		5.0
Max Green Setting (Gmax), s	11.0	36.0		29.0	11.0	36.0		29.0
Max Q Clear Time (g_c+I1), s	2.6	2.0		5.4	2.7	2.0		6.4
Green Ext Time (p_c), s	0.0	1.2		0.7	0.0	1.3		0.3

Intersection Summary	
HCM 2010 Ctrl Delay	15.8
HCM 2010 LOS	B

This document was created by an application that isn't licensed to use novaPDF.
Purchase a license to generate PDF files without this notice.

Movement	EBL	EBT	EBR	WBL	WBT	WBR	NBL	NBT	NBR	SBL	SBT	SBR
Lane Configurations												
Traffic Volume (veh/h)	91	1172	39	13	545	11	22	89	28	27	150	30
Future Volume (veh/h)	91	1172	39	13	545	11	22	89	28	27	150	30
Number	7	4	14	3	8	18	5	2	12	1	6	16
Initial Q (Qb), veh	0	0	0	0	0	0	0	0	0	0	0	0
Ped-Bike Adj(A_pbT)	1.00		1.00	1.00		1.00	1.00		1.00	1.00		1.00
Parking Bus, Adj	1.00	1.00	1.00	1.00	1.00	1.00	1.00	1.00	1.00	1.00	1.00	1.00
Adj Sat Flow, veh/h/ln	1863	1863	1900	1863	1863	1900	1863	1863	1900	1863	1863	1900
Adj Flow Rate, veh/h	99	1274	42	14	592	12	24	97	30	29	163	33
Adj No. of Lanes	1	2	0	1	2	0	1	1	0	1	1	0
Peak Hour Factor	0.92	0.92	0.92	0.92	0.92	0.92	0.92	0.92	0.92	0.92	0.92	0.92
Percent Heavy Veh, %	2	2	2	2	2	2	2	2	2	2	2	2
Cap, veh/h	298	1364	45	119	1384	28	80	535	165	91	599	121
Arrive On Green	0.78	0.78	0.78	0.39	0.39	0.39	0.05	0.39	0.39	0.10	0.80	0.80
Sat Flow, veh/h	812	3497	115	416	3548	72	1774	1366	422	1774	1504	305
Grp Volume(v), veh/h	99	644	672	14	295	309	24	0	127	29	0	196
Grp Sat Flow(s),veh/h/ln	812	1770	1842	416	1770	1850	1774	0	1788	1774	0	1809
Q Serve(g_s), s	6.7	26.5	26.7	2.8	11.0	11.0	1.2	0.0	4.2	1.4	0.0	2.5
Cycle Q Clear(g_c), s	17.7	26.5	26.7	29.5	11.0	11.0	1.2	0.0	4.2	1.4	0.0	2.5
Prop In Lane	1.00		0.06	1.00		0.04	1.00		0.24	1.00		0.17
Lane Grp Cap(c), veh/h	298	690	719	119	690	722	80	0	701	91	0	720
V/C Ratio(X)	0.33	0.93	0.93	0.12	0.43	0.43	0.30	0.00	0.18	0.32	0.00	0.27
Avail Cap(c_a), veh/h	315	728	757	128	728	761	189	0	701	197	0	720
HCM Platoon Ratio	2.00	2.00	2.00	1.00	1.00	1.00	1.00	1.00	1.00	2.00	2.00	2.00
Upstream Filter(I)	0.59	0.59	0.59	1.00	1.00	1.00	1.00	0.00	1.00	0.99	0.00	0.99
Uniform Delay (d), s/veh	11.4	9.0	9.0	38.2	20.1	20.1	41.6	0.0	17.9	38.9	0.0	5.8
Incr Delay (d2), s/veh	0.5	12.8	12.6	0.6	0.6	0.6	2.1	0.0	0.6	1.9	0.0	0.9
Initial Q Delay(d3),s/veh	0.0	0.0	0.0	0.0	0.0	0.0	0.0	0.0	0.0	0.0	0.0	0.0
%ile BackOfQ(50%),veh/ln	1.5	14.2	15.2	0.3	5.4	5.7	0.6	0.0	2.2	0.7	0.0	1.4
LnGrp Delay(d),s/veh	11.9	21.8	21.5	38.9	20.7	20.7	43.7	0.0	18.5	40.8	0.0	6.7
LnGrp LOS	B	C	C	D	C	C	D		B	D		A
Approach Vol, veh/h		1415			618			151			225	
Approach Delay, s/veh		21.0			21.1			22.5			11.1	
Approach LOS		C			C			C			B	

Timer	1	2	3	4	5	6	7	8
Assigned Phs	1	2		4	5	6		8
Phs Duration (G+Y+Rc), s	8.6	41.3		40.1	8.1	41.8		40.1
Change Period (Y+Rc), s	4.0	6.0		5.0	4.0	6.0		5.0
Max Green Setting (Gmax), s	10.0	28.0		37.0	9.6	28.4		37.0
Max Q Clear Time (g_c+I1), s	3.4	6.2		28.7	3.2	4.5		31.5
Green Ext Time (p_c), s	0.0	0.9		6.4	0.0	1.5		2.3

Intersection Summary	
HCM 2010 Ctrl Delay	20.2
HCM 2010 LOS	C

This document was created by an application that isn't licensed to use novaPDF.
Purchase a license to generate PDF files without this notice.

Movement	EBL	EBT	EBR	WBL	WBT	WBR	NBL	NBT	NBR	SBL	SBT	SBR
Lane Configurations												
Traffic Volume (veh/h)	8	371	67	24	302	17	9	27	11	11	68	13
Future Volume (veh/h)	8	371	67	24	302	17	9	27	11	11	68	13
Number	7	4	14	3	8	18	5	2	12	1	6	16
Initial Q (Qb), veh	0	0	0	0	0	0	0	0	0	0	0	0
Ped-Bike Adj(A_pbT)	1.00		1.00	1.00		1.00	1.00		1.00	1.00		1.00
Parking Bus, Adj	1.00	1.00	1.00	1.00	1.00	1.00	1.00	1.00	1.00	1.00	1.00	1.00
Adj Sat Flow, veh/h/ln	1900	1863	1900	1900	1863	1900	1900	1863	1900	1900	1863	1900
Adj Flow Rate, veh/h	9	403	73	26	328	18	10	29	12	12	74	14
Adj No. of Lanes	0	2	0	0	2	0	0	2	0	0	2	0
Peak Hour Factor	0.92	0.92	0.92	0.92	0.92	0.92	0.92	0.92	0.92	0.92	0.92	0.92
Percent Heavy Veh, %	2	2	2	2	2	2	2	2	2	2	2	2
Cap, veh/h	82	1226	217	130	1313	70	282	737	299	188	1001	182
Arrive On Green	0.42	0.42	0.42	0.42	0.42	0.42	0.38	0.38	0.38	0.38	0.38	0.38
Sat Flow, veh/h	17	2918	517	115	3127	168	484	1940	788	261	2635	480
Grp Volume(v), veh/h	259	0	226	193	0	179	27	0	24	53	0	47
Grp Sat Flow(s),veh/h/ln	1849	0	1604	1744	0	1666	1655	0	1556	1766	0	1610
Q Serve(g_s), s	0.0	0.0	4.8	0.0	0.0	3.5	0.0	0.0	0.5	0.0	0.0	0.9
Cycle Q Clear(g_c), s	4.7	0.0	4.8	3.4	0.0	3.5	0.5	0.0	0.5	0.9	0.0	0.9
Prop In Lane	0.03		0.32	0.13		0.10	0.37		0.51	0.23		0.30
Lane Grp Cap(c), veh/h	851	0	674	814	0	700	727	0	591	759	0	612
V/C Ratio(X)	0.30	0.00	0.34	0.24	0.00	0.26	0.04	0.00	0.04	0.07	0.00	0.08
Avail Cap(c_a), veh/h	851	0	674	814	0	700	727	0	591	759	0	612
HCM Platoon Ratio	1.00	1.00	1.00	1.00	1.00	1.00	1.00	1.00	1.00	1.00	1.00	1.00
Upstream Filter(I)	1.00	0.00	1.00	0.89	0.00	0.89	1.00	0.00	1.00	1.00	0.00	1.00
Uniform Delay (d), s/veh	9.8	0.0	9.8	9.4	0.0	9.4	9.8	0.0	9.8	9.9	0.0	9.9
Incr Delay (d2), s/veh	0.2	0.0	0.3	0.1	0.0	0.2	0.1	0.0	0.1	0.2	0.0	0.2
Initial Q Delay(d3),s/veh	0.0	0.0	0.0	0.0	0.0	0.0	0.0	0.0	0.0	0.0	0.0	0.0
%ile BackOfQ(50%),veh/ln	2.4	0.0	2.1	1.7	0.0	1.6	0.3	0.0	0.2	0.5	0.0	0.4
LnGrp Delay(d),s/veh	10.0	0.0	10.1	9.5	0.0	9.6	9.8	0.0	9.9	10.1	0.0	10.1
LnGrp LOS	A		B	A		A	A		A	B		B
Approach Vol, veh/h		485			372			51			100	
Approach Delay, s/veh		10.0			9.6			9.9			10.1	
Approach LOS		B			A			A			B	

Timer	1	2	3	4	5	6	7	8
Assigned Phs		2		4		6		8
Phs Duration (G+Y+Rc), s		24.0		26.0		24.0		26.0
Change Period (Y+Rc), s		5.0		5.0		5.0		5.0
Max Green Setting (Gmax), s		19.0		21.0		19.0		21.0
Max Q Clear Time (g_c+I1), s		2.5		6.8		2.9		5.5
Green Ext Time (p_c), s		0.2		2.5		0.4		1.9

Intersection Summary	
HCM 2010 Ctrl Delay	9.8
HCM 2010 LOS	A

This document was created by an application that isn't licensed to use novaPDF.
Purchase a license to generate PDF files without this notice.

Intersection	
Int Delay, s/veh	2.9

Movement	EBL	EBT	EBR	WBL	WBT	WBR	NBL	NBT	NBR	SBL	SBT	SBR
Lane Configurations												
Traffic Vol, veh/h	4	10	25	20	10	6	11	57	10	5	143	3
Future Vol, veh/h	4	10	25	20	10	6	11	57	10	5	143	3
Conflicting Peds, #/hr	0	0	0	0	0	0	0	0	0	0	0	0
Sign Control	Stop	Stop	Stop	Stop	Stop	Stop	Free	Free	Free	Free	Free	Free
RT Channelized	-	-	None	-	-	None	-	-	None	-	-	None
Storage Length	-	-	-	-	-	-	-	-	0	-	-	0
Veh in Median Storage, #	-	0	-	-	0	-	-	0	-	-	0	-
Grade, %	-	0	-	-	0	-	-	0	-	-	0	-
Peak Hour Factor	92	92	92	92	92	92	92	92	92	92	92	92
Heavy Vehicles, %	2	2	2	2	2	2	2	2	2	2	2	2
Mvmt Flow	4	11	27	22	11	7	12	62	11	5	155	3

Major/Minor	Minor2			Minor1			Major1			Major2		
Conflicting Flow All	266	262	155	272	254	62	158	0	0	73	0	0
Stage 1	165	165	-	86	86	-	-	-	-	-	-	-
Stage 2	101	97	-	186	168	-	-	-	-	-	-	-
Critical Hdwy	7.12	6.52	6.22	7.12	6.52	6.22	4.12	-	-	4.12	-	-
Critical Hdwy Stg 1	6.12	5.52	-	6.12	5.52	-	-	-	-	-	-	-
Critical Hdwy Stg 2	6.12	5.52	-	6.12	5.52	-	-	-	-	-	-	-
Follow-up Hdwy	3.518	4.018	3.318	3.518	4.018	3.318	2.218	-	-	2.218	-	-
Pot Cap-1 Maneuver	687	643	891	680	650	1003	1422	-	-	1527	-	-
Stage 1	837	762	-	922	824	-	-	-	-	-	-	-
Stage 2	905	815	-	816	759	-	-	-	-	-	-	-
Platoon blocked, %								-	-		-	-
Mov Cap-1 Maneuver	667	635	891	644	642	1003	1422	-	-	1527	-	-
Mov Cap-2 Maneuver	667	635	-	644	642	-	-	-	-	-	-	-
Stage 1	829	759	-	914	817	-	-	-	-	-	-	-
Stage 2	879	808	-	777	756	-	-	-	-	-	-	-

Approach	EB	WB	NB	SB
HCM Control Delay, s	9.9	10.6	1.1	0.2
HCM LOS	A	B		

Minor Lane/Major Mvmt	NBL	NBT	NBR	EBLn1	WBLn1	SBL	SBT	SBR
Capacity (veh/h)	1422	-	-	783	684	1527	-	-
HCM Lane V/C Ratio	0.008	-	-	0.054	0.057	0.004	-	-
HCM Control Delay (s)	7.6	0	-	9.9	10.6	7.4	0	-
HCM Lane LOS	A	A	-	A	B	A	A	-
HCM 95th %tile Q(veh)	0	-	-	0.2	0.2	0	-	-

This document was created by an application that isn't licensed to use novaPDF.
Purchase a license to generate PDF files without this notice.

Movement	EBL	EBT	EBR	WBL	WBT	WBR	NBL	NBT	NBR	SBL	SBT	SBR
Lane Configurations												
Traffic Volume (veh/h)	23	87	20	12	47	13	16	57	41	16	47	56
Future Volume (veh/h)	23	87	20	12	47	13	16	57	41	16	47	56
Number	7	4	14	3	8	18	5	2	12	1	6	16
Initial Q (Qb), veh	0	0	0	0	0	0	0	0	0	0	0	0
Ped-Bike Adj(A_pbT)	1.00		1.00	1.00		1.00	1.00		1.00	1.00		1.00
Parking Bus, Adj	1.00	1.00	1.00	1.00	1.00	1.00	1.00	1.00	1.00	1.00	1.00	1.00
Adj Sat Flow, veh/h/ln	1863	1863	1863	1863	1863	1863	1900	1863	1900	1900	1863	1900
Adj Flow Rate, veh/h	25	95	22	13	51	14	17	62	45	17	51	61
Adj No. of Lanes	1	1	1	1	1	1	0	2	0	0	2	0
Peak Hour Factor	0.92	0.92	0.92	0.92	0.92	0.92	0.92	0.92	0.92	0.92	0.92	0.92
Percent Heavy Veh, %	2	2	2	2	2	2	2	2	2	2	2	2
Cap, veh/h	709	820	697	665	820	697	206	663	442	202	545	548
Arrive On Green	0.44	0.44	0.44	0.44	0.44	0.44	0.38	0.38	0.38	0.38	0.38	0.38
Sat Flow, veh/h	1331	1863	1583	1270	1863	1583	304	1746	1163	295	1434	1441
Grp Volume(v), veh/h	25	95	22	13	51	14	66	0	58	68	0	61
Grp Sat Flow(s),veh/h/ln	1331	1863	1583	1270	1863	1583	1723	0	1490	1729	0	1441
Q Serve(g_s), s	0.6	1.5	0.4	0.3	0.8	0.2	0.0	0.0	1.2	0.0	0.0	1.4
Cycle Q Clear(g_c), s	1.3	1.5	0.4	1.8	0.8	0.2	1.1	0.0	1.2	1.2	0.0	1.4
Prop In Lane	1.00		1.00	1.00		1.00	0.26		0.78	0.25		1.00
Lane Grp Cap(c), veh/h	709	820	697	665	820	697	745	0	566	747	0	548
V/C Ratio(X)	0.04	0.12	0.03	0.02	0.06	0.02	0.09	0.00	0.10	0.09	0.00	0.11
Avail Cap(c_a), veh/h	709	820	697	665	820	697	745	0	566	747	0	548
HCM Platoon Ratio	1.00	1.00	1.00	1.00	1.00	1.00	1.00	1.00	1.00	1.00	1.00	1.00
Upstream Filter(I)	1.00	1.00	1.00	0.99	0.99	0.99	0.99	0.00	0.99	1.00	0.00	1.00
Uniform Delay (d), s/veh	8.4	8.3	8.0	8.8	8.1	7.9	10.0	0.0	10.0	10.0	0.0	10.0
Incr Delay (d2), s/veh	0.0	0.0	0.0	0.0	0.0	0.0	0.2	0.0	0.4	0.2	0.0	0.4
Initial Q Delay(d3),s/veh	0.0	0.0	0.0	0.0	0.0	0.0	0.0	0.0	0.0	0.0	0.0	0.0
%ile BackOfQ(50%),veh/ln	0.2	0.8	0.2	0.1	0.4	0.1	0.6	0.0	0.6	0.7	0.0	0.6
LnGrp Delay(d),s/veh	8.5	8.3	8.0	8.8	8.1	7.9	10.2	0.0	10.4	10.2	0.0	10.4
LnGrp LOS	A	A	A	A	A	A	B		B	B		B
Approach Vol, veh/h		142			78			124			129	
Approach Delay, s/veh		8.3			8.2			10.3			10.3	
Approach LOS		A			A			B			B	

Timer	1	2	3	4	5	6	7	8
Assigned Phs		2		4		6		8
Phs Duration (G+Y+Rc), s		23.5		26.5		23.5		26.5
Change Period (Y+Rc), s		4.5		4.5		4.5		4.5
Max Green Setting (Gmax), s		19.0		22.0		19.0		22.0
Max Q Clear Time (g_c+I1), s		3.2		3.5		3.4		3.8
Green Ext Time (p_c), s		0.3		0.3		0.4		0.1

Intersection Summary	
HCM 2010 Ctrl Delay	9.3
HCM 2010 LOS	A

This document was created by an application that isn't licensed to use novaPDF.
Purchase a license to generate PDF files without this notice.

Movement	EBL	EBT	EBR	WBL	WBT	WBR	NBL	NBT	NBR	SBL	SBT	SBR
Lane Configurations												
Traffic Volume (veh/h)	69	1312	7	7	573	22	5	19	6	13	22	12
Future Volume (veh/h)	69	1312	7	7	573	22	5	19	6	13	22	12
Number	7	4	14	3	8	18	5	2	12	1	6	16
Initial Q (Qb), veh	0	0	0	0	0	0	0	0	0	0	0	0
Ped-Bike Adj(A_pbT)	1.00		1.00	1.00		1.00	1.00		1.00	1.00		1.00
Parking Bus, Adj	1.00	1.00	1.00	1.00	1.00	1.00	1.00	1.00	1.00	1.00	1.00	1.00
Adj Sat Flow, veh/h/ln	1863	1863	1900	1863	1863	1900	1900	1863	1900	1900	1863	1900
Adj Flow Rate, veh/h	75	1426	8	8	623	24	5	21	7	14	24	13
Adj No. of Lanes	1	2	0	1	2	0	0	2	0	0	2	0
Peak Hour Factor	0.92	0.92	0.92	0.92	0.92	0.92	0.92	0.92	0.92	0.92	0.92	0.92
Percent Heavy Veh, %	2	2	2	2	2	2	2	2	2	2	2	2
Cap, veh/h	372	1754	10	136	1689	65	220	869	284	371	614	339
Arrive On Green	0.49	0.49	0.49	0.49	0.49	0.49	0.40	0.40	0.40	0.40	0.40	0.40
Sat Flow, veh/h	781	3609	20	371	3475	134	417	2157	706	771	1524	842
Grp Volume(v), veh/h	75	699	735	8	317	330	17	0	16	27	0	24
Grp Sat Flow(s),veh/h/ln	781	1770	1859	371	1770	1839	1711	0	1570	1590	0	1546
Q Serve(g_s), s	6.0	30.2	30.2	1.7	10.1	10.1	0.0	0.0	0.5	0.0	0.0	0.8
Cycle Q Clear(g_c), s	16.1	30.2	30.2	31.9	10.1	10.1	0.5	0.0	0.5	0.8	0.0	0.8
Prop In Lane	1.00		0.01	1.00		0.07	0.29		0.45	0.52		0.54
Lane Grp Cap(c), veh/h	372	860	904	136	860	894	740	0	632	701	0	623
V/C Ratio(X)	0.20	0.81	0.81	0.06	0.37	0.37	0.02	0.00	0.02	0.04	0.00	0.04
Avail Cap(c_a), veh/h	461	1062	1116	178	1062	1103	740	0	632	701	0	623
HCM Platoon Ratio	1.00	1.00	1.00	1.00	1.00	1.00	1.00	1.00	1.00	1.00	1.00	1.00
Upstream Filter(I)	1.00	1.00	1.00	0.95	0.95	0.95	1.00	0.00	1.00	1.00	0.00	1.00
Uniform Delay (d), s/veh	19.5	19.6	19.6	33.2	14.5	14.5	16.2	0.0	16.2	16.3	0.0	16.3
Incr Delay (d2), s/veh	0.3	4.0	3.8	0.2	0.3	0.2	0.1	0.0	0.1	0.1	0.0	0.1
Initial Q Delay(d3),s/veh	0.0	0.0	0.0	0.0	0.0	0.0	0.0	0.0	0.0	0.0	0.0	0.0
%ile BackOfQ(50%),veh/ln	1.3	15.5	16.3	0.2	5.0	5.2	0.3	0.0	0.2	0.4	0.0	0.4
LnGrp Delay(d),s/veh	19.8	23.7	23.5	33.4	14.7	14.7	16.3	0.0	16.3	16.4	0.0	16.4
LnGrp LOS	B	C	C	C	B	B	B		B	B		B
Approach Vol, veh/h		1509			655			33			51	
Approach Delay, s/veh		23.4			15.0			16.3			16.4	
Approach LOS		C			B			B			B	

Timer	1	2	3	4	5	6	7	8
Assigned Phs		2		4		6		8
Phs Duration (G+Y+Rc), s		41.2		48.8		41.2		48.8
Change Period (Y+Rc), s		5.0		5.0		5.0		5.0
Max Green Setting (Gmax), s		26.0		54.0		26.0		54.0
Max Q Clear Time (g_c+I1), s		2.5		32.2		2.8		33.9
Green Ext Time (p_c), s		0.1		11.5		0.2		4.1

Intersection Summary	
HCM 2010 Ctrl Delay	20.7
HCM 2010 LOS	C

This document was created by an application that isn't licensed to use novaPDF.
Purchase a license to generate PDF files without this notice.

Movement	EBL	EBT	EBR	WBL	WBT	WBR	NBL	NBT	NBR	SBL	SBT	SBR
Lane Configurations												
Traffic Volume (veh/h)	39	350	24	31	420	57	27	258	36	41	181	30
Future Volume (veh/h)	39	350	24	31	420	57	27	258	36	41	181	30
Number	7	4	14	3	8	18	5	2	12	1	6	16
Initial Q (Qb), veh	0	0	0	0	0	0	0	0	0	0	0	0
Ped-Bike Adj(A_pbT)	1.00		1.00	1.00		1.00	1.00		1.00	1.00		1.00
Parking Bus, Adj	1.00	1.00	1.00	1.00	1.00	1.00	1.00	1.00	1.00	1.00	1.00	1.00
Adj Sat Flow, veh/h/ln	1569	1569	1600	1569	1569	1600	1569	1569	1600	1569	1569	1600
Adj Flow Rate, veh/h	42	380	26	34	457	62	29	280	39	45	197	33
Adj No. of Lanes	1	2	0	1	2	0	1	1	0	1	1	0
Peak Hour Factor	0.92	0.92	0.92	0.92	0.92	0.92	0.92	0.92	0.92	0.92	0.92	0.92
Percent Heavy Veh, %	2	2	2	2	2	2	2	2	2	2	2	2
Cap, veh/h	299	787	54	349	763	103	133	448	62	149	450	75
Arrive On Green	0.08	0.28	0.28	0.09	0.29	0.29	0.18	0.66	0.66	0.10	0.34	0.34
Sat Flow, veh/h	1494	2832	193	1494	2640	356	1494	1348	188	1494	1310	220
Grp Volume(v), veh/h	42	199	207	34	257	262	29	0	319	45	0	230
Grp Sat Flow(s),veh/h/ln	1494	1490	1535	1494	1490	1506	1494	0	1535	1494	0	1530
Q Serve(g_s), s	1.7	10.0	10.1	1.3	13.3	13.5	1.5	0.0	10.7	2.5	0.0	10.5
Cycle Q Clear(g_c), s	1.7	10.0	10.1	1.3	13.3	13.5	1.5	0.0	10.7	2.5	0.0	10.5
Prop In Lane	1.00		0.13	1.00		0.24	1.00		0.12	1.00		0.14
Lane Grp Cap(c), veh/h	299	414	426	349	431	435	133	0	510	149	0	525
V/C Ratio(X)	0.14	0.48	0.48	0.10	0.60	0.60	0.22	0.00	0.63	0.30	0.00	0.44
Avail Cap(c_a), veh/h	299	414	426	349	431	435	133	0	510	149	0	525
HCM Platoon Ratio	1.00	1.00	1.00	1.00	1.00	1.00	2.00	2.00	2.00	1.00	1.00	1.00
Upstream Filter(I)	0.95	0.95	0.95	1.00	1.00	1.00	0.95	0.00	0.95	1.00	0.00	1.00
Uniform Delay (d), s/veh	20.1	27.1	27.1	19.1	27.5	27.5	34.3	0.0	11.9	37.6	0.0	22.8
Incr Delay (d2), s/veh	0.9	3.8	3.7	0.6	6.0	6.1	3.6	0.0	5.4	5.1	0.0	2.6
Initial Q Delay(d3),s/veh	0.0	0.0	0.0	0.0	0.0	0.0	0.0	0.0	0.0	0.0	0.0	0.0
%ile BackOfQ(50%),veh/ln	0.8	4.5	4.7	0.6	6.2	6.3	0.7	0.0	5.2	1.2	0.0	4.8
LnGrp Delay(d),s/veh	21.1	30.9	30.8	19.6	33.5	33.6	37.9	0.0	17.3	42.7	0.0	25.5
LnGrp LOS	C	C	C	B	C	C	D		B	D		C
Approach Vol, veh/h		448			553			348			275	
Approach Delay, s/veh		29.9			32.7			19.0			28.3	
Approach LOS		C			C			B			C	

Timer	1	2	3	4	5	6	7	8
Assigned Phs	1	2	3	4	5	6	7	8
Phs Duration (G+Y+Rc), s	13.0	35.0	12.0	30.0	12.0	36.0	11.0	31.0
Change Period (Y+Rc), s	4.0	5.1	4.0	5.0	4.0	5.1	4.0	5.0
Max Green Setting (Gmax), s	9.0	29.9	8.0	25.0	8.0	30.9	7.0	26.0
Max Q Clear Time (g_c+I1), s	4.5	12.7	3.3	12.1	3.5	12.5	3.7	15.5
Green Ext Time (p_c), s	0.0	1.7	0.0	1.9	0.0	1.2	0.0	2.3

Intersection Summary	
HCM 2010 Ctrl Delay	28.3
HCM 2010 LOS	C

This document was created by an application that isn't licensed to use novaPDF.
Purchase a license to generate PDF files without this notice.

Movement	EBL	EBT	EBR	WBL	WBT	WBR	NBL	NBT	NBR	SBL	SBT	SBR
Lane Configurations												
Traffic Volume (veh/h)	19	27	12	10	25	15	19	294	10	5	231	9
Future Volume (veh/h)	19	27	12	10	25	15	19	294	10	5	231	9
Number	7	4	14	3	8	18	5	2	12	1	6	16
Initial Q (Qb), veh	0	0	0	0	0	0	0	0	0	0	0	0
Ped-Bike Adj(A_pbT)	1.00		1.00	1.00		1.00	1.00		1.00	1.00		1.00
Parking Bus, Adj	1.00	1.00	1.00	1.00	1.00	1.00	1.00	1.00	1.00	1.00	1.00	1.00
Adj Sat Flow, veh/h/ln	1600	1569	1600	1600	1569	1600	1569	1569	1600	1569	1569	1600
Adj Flow Rate, veh/h	21	29	13	11	27	16	21	320	11	5	251	10
Adj No. of Lanes	0	1	0	0	1	0	1	1	0	1	1	0
Peak Hour Factor	0.92	0.92	0.92	0.92	0.92	0.92	0.92	0.92	0.92	0.92	0.92	0.92
Percent Heavy Veh, %	2	2	2	2	2	2	2	2	2	2	2	2
Cap, veh/h	79	62	23	62	66	33	133	1012	35	149	1022	41
Arrive On Green	0.08	0.08	0.08	0.08	0.08	0.08	0.18	1.00	1.00	0.20	1.00	1.00
Sat Flow, veh/h	336	798	295	175	846	430	1494	1508	52	1494	1498	60
Grp Volume(v), veh/h	63	0	0	54	0	0	21	0	331	5	0	261
Grp Sat Flow(s),veh/h/ln	1428	0	0	1450	0	0	1494	0	1559	1494	0	1558
Q Serve(g_s), s	0.5	0.0	0.0	0.0	0.0	0.0	1.1	0.0	0.0	0.2	0.0	0.0
Cycle Q Clear(g_c), s	3.6	0.0	0.0	3.1	0.0	0.0	1.1	0.0	0.0	0.2	0.0	0.0
Prop In Lane	0.33		0.21	0.20		0.30	1.00		0.03	1.00		0.04
Lane Grp Cap(c), veh/h	164	0	0	161	0	0	133	0	1047	149	0	1063
V/C Ratio(X)	0.38	0.00	0.00	0.34	0.00	0.00	0.16	0.00	0.32	0.03	0.00	0.25
Avail Cap(c_a), veh/h	471	0	0	476	0	0	166	0	1047	166	0	1063
HCM Platoon Ratio	1.00	1.00	1.00	1.00	1.00	1.00	2.00	2.00	2.00	2.00	2.00	2.00
Upstream Filter(I)	1.00	0.00	0.00	1.00	0.00	0.00	0.97	0.00	0.97	0.93	0.00	0.93
Uniform Delay (d), s/veh	39.9	0.0	0.0	39.7	0.0	0.0	34.2	0.0	0.0	32.5	0.0	0.0
Incr Delay (d2), s/veh	1.5	0.0	0.0	1.2	0.0	0.0	0.5	0.0	0.8	0.1	0.0	0.5
Initial Q Delay(d3),s/veh	0.0	0.0	0.0	0.0	0.0	0.0	0.0	0.0	0.0	0.0	0.0	0.0
%ile BackOfQ(50%),veh/ln	1.6	0.0	0.0	1.3	0.0	0.0	0.5	0.0	0.2	0.1	0.0	0.2
LnGrp Delay(d),s/veh	41.4	0.0	0.0	40.9	0.0	0.0	34.7	0.0	0.8	32.6	0.0	0.5
LnGrp LOS	D			D			C		A	C		A
Approach Vol, veh/h		63			54			352			266	
Approach Delay, s/veh		41.4			40.9			2.8			1.1	
Approach LOS		D			D			A			A	

Timer	1	2	3	4	5	6	7	8
Assigned Phs	1	2		4	5	6		8
Phs Duration (G+Y+Rc), s	13.0	65.4		11.6	12.0	66.4		11.6
Change Period (Y+Rc), s	4.0	5.0		4.6	4.0	5.0		4.6
Max Green Setting (Gmax), s	10.0	39.0		27.4	10.0	39.0		27.4
Max Q Clear Time (g_c+I1), s	2.2	2.0		5.6	3.1	2.0		5.1
Green Ext Time (p_c), s	0.0	2.2		0.2	0.0	1.7		0.2

Intersection Summary	
HCM 2010 Ctrl Delay	8.3
HCM 2010 LOS	A

This document was created by an application that isn't licensed to use novaPDF.
Purchase a license to generate PDF files without this notice.

Movement	EBL	EBT	EBR	WBL	WBT	WBR	NBL	NBT	NBR	SBL	SBT	SBR
Lane Configurations												
Traffic Volume (veh/h)	7	52	9	45	163	12	21	284	21	15	254	26
Future Volume (veh/h)	7	52	9	45	163	12	21	284	21	15	254	26
Number	7	4	14	3	8	18	5	2	12	1	6	16
Initial Q (Qb), veh	0	0	0	0	0	0	0	0	0	0	0	0
Ped-Bike Adj(A_pbT)	1.00		1.00	1.00		1.00	1.00		1.00	1.00		1.00
Parking Bus, Adj	1.00	1.00	1.00	1.00	1.00	1.00	1.00	1.00	1.00	1.00	1.00	1.00
Adj Sat Flow, veh/h/ln	1863	1863	1900	1863	1863	1900	1863	1863	1900	1863	1863	1900
Adj Flow Rate, veh/h	8	57	10	49	177	13	23	309	23	16	276	28
Adj No. of Lanes	1	2	0	1	2	0	1	1	0	1	1	0
Peak Hour Factor	0.92	0.92	0.92	0.92	0.92	0.92	0.92	0.92	0.92	0.92	0.92	0.92
Percent Heavy Veh, %	2	2	2	2	2	2	2	2	2	2	2	2
Cap, veh/h	124	267	46	173	295	22	158	1124	84	177	1110	113
Arrive On Green	0.09	0.09	0.09	0.09	0.09	0.09	0.18	1.00	1.00	0.20	1.00	1.00
Sat Flow, veh/h	1188	3024	517	1329	3346	244	1774	1713	127	1774	1664	169
Grp Volume(v), veh/h	8	33	34	49	93	97	23	0	332	16	0	304
Grp Sat Flow(s),veh/h/ln	1188	1770	1771	1329	1770	1820	1774	0	1840	1774	0	1833
Q Serve(g_s), s	0.6	1.5	1.6	3.2	4.5	4.6	1.0	0.0	0.0	0.7	0.0	0.0
Cycle Q Clear(g_c), s	5.2	1.5	1.6	4.8	4.5	4.6	1.0	0.0	0.0	0.7	0.0	0.0
Prop In Lane	1.00		0.29	1.00		0.13	1.00		0.07	1.00		0.09
Lane Grp Cap(c), veh/h	124	156	156	173	156	161	158	0	1207	177	0	1223
V/C Ratio(X)	0.06	0.21	0.22	0.28	0.59	0.60	0.15	0.00	0.27	0.09	0.00	0.25
Avail Cap(c_a), veh/h	389	551	551	470	551	566	217	0	1207	217	0	1223
HCM Platoon Ratio	1.00	1.00	1.00	1.00	1.00	1.00	2.00	2.00	2.00	2.00	2.00	2.00
Upstream Filter(I)	1.00	1.00	1.00	1.00	1.00	1.00	0.88	0.00	0.88	0.98	0.00	0.98
Uniform Delay (d), s/veh	42.0	38.1	38.1	40.4	39.5	39.5	34.1	0.0	0.0	32.7	0.0	0.0
Incr Delay (d2), s/veh	0.2	0.7	0.7	0.9	3.6	3.6	0.4	0.0	0.5	0.2	0.0	0.5
Initial Q Delay(d3),s/veh	0.0	0.0	0.0	0.0	0.0	0.0	0.0	0.0	0.0	0.0	0.0	0.0
%ile BackOfQ(50%),veh/ln	0.2	0.8	0.8	1.2	2.4	2.5	0.5	0.0	0.2	0.3	0.0	0.2
LnGrp Delay(d),s/veh	42.2	38.8	38.8	41.3	43.1	43.1	34.5	0.0	0.5	32.9	0.0	0.5
LnGrp LOS	D	D	D	D	D	D	C		A	C		A
Approach Vol, veh/h		75			239			355			320	
Approach Delay, s/veh		39.2			42.7			2.7			2.1	
Approach LOS		D			D			A			A	

Timer	1	2	3	4	5	6	7	8
Assigned Phs	1	2		4	5	6		8
Phs Duration (G+Y+Rc), s	13.0	64.1		12.9	12.0	65.1		12.9
Change Period (Y+Rc), s	4.0	5.0		5.0	4.0	5.0		5.0
Max Green Setting (Gmax), s	11.0	37.0		28.0	11.0	37.0		28.0
Max Q Clear Time (g_c+I1), s	7.2	2.0		7.2	3.0	2.0		6.8
Green Ext Time (p_c), s	0.0	2.2		0.3	0.0	2.0		1.1

Intersection Summary	
HCM 2010 Ctrl Delay	14.9
HCM 2010 LOS	B

This document was created by an application that isn't licensed to use novaPDF.
Purchase a license to generate PDF files without this notice.

Movement	EBL	EBT	EBR	WBL	WBT	WBR	NBL	NBT	NBR	SBL	SBT	SBR
Lane Configurations												
Traffic Volume (veh/h)	23	746	39	32	939	33	74	275	49	43	173	57
Future Volume (veh/h)	23	746	39	32	939	33	74	275	49	43	173	57
Number	7	4	14	3	8	18	5	2	12	1	6	16
Initial Q (Qb), veh	0	0	0	0	0	0	0	0	0	0	0	0
Ped-Bike Adj(A_pbT)	1.00		1.00	1.00		1.00	1.00		1.00	1.00		1.00
Parking Bus, Adj	1.00	1.00	1.00	1.00	1.00	1.00	1.00	1.00	1.00	1.00	1.00	1.00
Adj Sat Flow, veh/h/ln	1863	1863	1900	1863	1863	1900	1863	1863	1900	1863	1863	1900
Adj Flow Rate, veh/h	25	811	42	35	1021	36	80	299	53	47	188	62
Adj No. of Lanes	1	2	0	1	2	0	1	1	0	1	1	0
Peak Hour Factor	0.92	0.92	0.92	0.92	0.92	0.92	0.92	0.92	0.92	0.92	0.92	0.92
Percent Heavy Veh, %	2	2	2	2	2	2	2	2	2	2	2	2
Cap, veh/h	133	1243	64	234	1266	45	153	618	110	123	515	170
Arrive On Green	0.73	0.73	0.73	0.36	0.36	0.36	0.09	0.40	0.40	0.14	0.77	0.77
Sat Flow, veh/h	532	3424	177	644	3488	123	1774	1541	273	1774	1342	443
Grp Volume(v), veh/h	25	419	434	35	518	539	80	0	352	47	0	250
Grp Sat Flow(s),veh/h/ln	532	1770	1831	644	1770	1841	1774	0	1815	1774	0	1785
Q Serve(g_s), s	3.7	11.1	11.1	3.9	23.7	23.7	3.9	0.0	13.0	2.2	0.0	4.1
Cycle Q Clear(g_c), s	27.5	11.1	11.1	15.0	23.7	23.7	3.9	0.0	13.0	2.2	0.0	4.1
Prop In Lane	1.00		0.10	1.00		0.07	1.00		0.15	1.00		0.25
Lane Grp Cap(c), veh/h	133	643	665	234	643	668	153	0	728	123	0	685
V/C Ratio(X)	0.19	0.65	0.65	0.15	0.81	0.81	0.52	0.00	0.48	0.38	0.00	0.37
Avail Cap(c_a), veh/h	147	688	712	251	688	716	189	0	728	197	0	685
HCM Platoon Ratio	2.00	2.00	2.00	1.00	1.00	1.00	1.00	1.00	1.00	2.00	2.00	2.00
Upstream Filter(I)	0.83	0.83	0.83	1.00	1.00	1.00	1.00	0.00	1.00	0.97	0.00	0.97
Uniform Delay (d), s/veh	22.1	9.4	9.4	27.5	25.8	25.8	39.3	0.0	20.0	37.0	0.0	6.9
Incr Delay (d2), s/veh	0.8	2.0	1.9	0.4	7.1	6.8	2.7	0.0	2.3	1.9	0.0	1.5
Initial Q Delay(d3),s/veh	0.0	0.0	0.0	0.0	0.0	0.0	0.0	0.0	0.0	0.0	0.0	0.0
%ile BackOfQ(50%),veh/ln	0.6	5.5	5.6	0.7	12.8	13.2	2.0	0.0	6.9	1.1	0.0	2.2
LnGrp Delay(d),s/veh	22.9	11.4	11.3	27.9	32.9	32.6	42.1	0.0	22.3	38.9	0.0	8.4
LnGrp LOS	C	B	B	C	C	C	D		C	D		A
Approach Vol, veh/h		878			1092			432			297	
Approach Delay, s/veh		11.6			32.6			26.0			13.2	
Approach LOS		B			C			C			B	

Timer	1	2	3	4	5	6	7	8
Assigned Phs	1	2		4	5	6		8
Phs Duration (G+Y+Rc), s	16.2	42.1		37.7	11.8	40.5		37.7
Change Period (Y+Rc), s	4.0	6.0		5.0	4.0	6.0		5.0
Max Green Setting (Gmax), s	10.0	30.0		35.0	9.6	30.4		35.0
Max Q Clear Time (g_c+I1), s	4.7	15.0		29.5	5.9	6.1		25.7
Green Ext Time (p_c), s	0.0	2.6		3.2	0.0	2.1		5.8

Intersection Summary	
HCM 2010 Ctrl Delay	22.6
HCM 2010 LOS	C

This document was created by an application that isn't licensed to use novaPDF.
Purchase a license to generate PDF files without this notice.

Movement	EBL	EBT	EBR	WBL	WBT	WBR	NBL	NBT	NBR	SBL	SBT	SBR
Lane Configurations												
Traffic Volume (veh/h)	13	387	30	9	466	20	36	67	15	10	27	22
Future Volume (veh/h)	13	387	30	9	466	20	36	67	15	10	27	22
Number	7	4	14	3	8	18	5	2	12	1	6	16
Initial Q (Qb), veh	0	0	0	0	0	0	0	0	0	0	0	0
Ped-Bike Adj(A_pbT)	1.00		1.00	1.00		1.00	1.00		1.00	1.00		1.00
Parking Bus, Adj	1.00	1.00	1.00	1.00	1.00	1.00	1.00	1.00	1.00	1.00	1.00	1.00
Adj Sat Flow, veh/h/ln	1900	1863	1900	1900	1863	1900	1900	1863	1900	1900	1863	1900
Adj Flow Rate, veh/h	14	421	33	10	507	22	39	73	16	11	29	24
Adj No. of Lanes	0	2	0	0	2	0	0	2	0	0	2	0
Peak Hour Factor	0.92	0.92	0.92	0.92	0.92	0.92	0.92	0.92	0.92	0.92	0.92	0.92
Percent Heavy Veh, %	2	2	2	2	2	2	2	2	2	2	2	2
Cap, veh/h	90	1343	103	82	1408	60	416	737	166	251	593	455
Arrive On Green	0.42	0.42	0.42	0.42	0.42	0.42	0.38	0.38	0.38	0.38	0.38	0.38
Sat Flow, veh/h	33	3198	246	18	3352	144	798	1939	437	412	1561	1197
Grp Volume(v), veh/h	246	0	222	283	0	256	69	0	59	34	0	30
Grp Sat Flow(s),veh/h/ln	1825	0	1652	1845	0	1670	1556	0	1618	1686	0	1484
Q Serve(g_s), s	0.0	0.0	4.5	0.0	0.0	5.2	0.0	0.0	1.2	0.0	0.0	0.6
Cycle Q Clear(g_c), s	4.4	0.0	4.5	5.2	0.0	5.2	1.2	0.0	1.2	0.6	0.0	0.6
Prop In Lane	0.06		0.15	0.04		0.09	0.57		0.27	0.32		0.81
Lane Grp Cap(c), veh/h	843	0	694	849	0	701	704	0	615	736	0	564
V/C Ratio(X)	0.29	0.00	0.32	0.33	0.00	0.36	0.10	0.00	0.10	0.05	0.00	0.05
Avail Cap(c_a), veh/h	843	0	694	849	0	701	704	0	615	736	0	564
HCM Platoon Ratio	1.00	1.00	1.00	1.00	1.00	1.00	1.00	1.00	1.00	1.00	1.00	1.00
Upstream Filter(I)	1.00	0.00	1.00	0.78	0.00	0.78	1.00	0.00	1.00	1.00	0.00	1.00
Uniform Delay (d), s/veh	9.7	0.0	9.7	9.9	0.0	9.9	10.0	0.0	10.0	9.8	0.0	9.8
Incr Delay (d2), s/veh	0.2	0.0	0.3	0.2	0.0	0.2	0.3	0.0	0.3	0.1	0.0	0.2
Initial Q Delay(d3),s/veh	0.0	0.0	0.0	0.0	0.0	0.0	0.0	0.0	0.0	0.0	0.0	0.0
%ile BackOfQ(50%),veh/ln	2.3	0.0	2.1	2.7	0.0	2.5	0.7	0.0	0.6	0.3	0.0	0.3
LnGrp Delay(d),s/veh	9.9	0.0	10.0	10.1	0.0	10.2	10.3	0.0	10.3	9.9	0.0	10.0
LnGrp LOS	A		A	B		B	B		B	A		A
Approach Vol, veh/h		468			539			128			64	
Approach Delay, s/veh		9.9			10.1			10.3			9.9	
Approach LOS		A			B			B			A	

Timer	1	2	3	4	5	6	7	8
Assigned Phs		2		4		6		8
Phs Duration (G+Y+Rc), s		24.0		26.0		24.0		26.0
Change Period (Y+Rc), s		5.0		5.0		5.0		5.0
Max Green Setting (Gmax), s		19.0		21.0		19.0		21.0
Max Q Clear Time (g_c+I1), s		3.2		6.5		2.6		7.2
Green Ext Time (p_c), s		0.5		2.4		0.2		2.8

Intersection Summary	
HCM 2010 Ctrl Delay	10.1
HCM 2010 LOS	B

This document was created by an application that isn't licensed to use novaPDF.
Purchase a license to generate PDF files without this notice.

Intersection	
Int Delay, s/veh	4.4

Movement	EBL	EBT	EBR	WBL	WBT	WBR	NBL	NBT	NBR	SBL	SBT	SBR
Lane Configurations												
Traffic Vol, veh/h	4	13	8	17	27	28	14	90	6	12	37	12
Future Vol, veh/h	4	13	8	17	27	28	14	90	6	12	37	12
Conflicting Peds, #/hr	0	0	0	0	0	0	0	0	0	0	0	0
Sign Control	Stop	Stop	Stop	Stop	Stop	Stop	Free	Free	Free	Free	Free	Free
RT Channelized	-	-	None	-	-	None	-	-	None	-	-	None
Storage Length	-	-	-	-	-	-	-	-	0	-	-	0
Veh in Median Storage, #	-	0	-	-	0	-	-	0	-	-	0	-
Grade, %	-	0	-	-	0	-	-	0	-	-	0	-
Peak Hour Factor	92	92	92	92	92	92	92	92	92	92	92	92
Heavy Vehicles, %	2	2	2	2	2	2	2	2	2	2	2	2
Mvmt Flow	4	14	9	18	29	30	15	98	7	13	40	13

Major/Minor	Minor2			Minor1			Major1			Major2		
Conflicting Flow All	227	201	40	212	207	98	53	0	0	105	0	0
Stage 1	66	66	-	128	128	-	-	-	-	-	-	-
Stage 2	161	135	-	84	79	-	-	-	-	-	-	-
Critical Hdwy	7.12	6.52	6.22	7.12	6.52	6.22	4.12	-	-	4.12	-	-
Critical Hdwy Stg 1	6.12	5.52	-	6.12	5.52	-	-	-	-	-	-	-
Critical Hdwy Stg 2	6.12	5.52	-	6.12	5.52	-	-	-	-	-	-	-
Follow-up Hdwy	3.518	4.018	3.318	3.518	4.018	3.318	2.218	-	-	2.218	-	-
Pot Cap-1 Maneuver	728	695	1031	745	690	958	1553	-	-	1486	-	-
Stage 1	945	840	-	876	790	-	-	-	-	-	-	-
Stage 2	841	785	-	924	829	-	-	-	-	-	-	-
Platoon blocked, %								-	-		-	-
Mov Cap-1 Maneuver	672	682	1031	717	677	958	1553	-	-	1486	-	-
Mov Cap-2 Maneuver	672	682	-	717	677	-	-	-	-	-	-	-
Stage 1	936	832	-	867	782	-	-	-	-	-	-	-
Stage 2	776	777	-	893	822	-	-	-	-	-	-	-

Approach	EB	WB	NB	SB
HCM Control Delay, s	9.9	10.2	0.9	1.5
HCM LOS	A	B		

Minor Lane/Major Mvmt	NBL	NBT	NBR	EBLn1	WBLn1	SBL	SBT	SBR
Capacity (veh/h)	1553	-	-	763	776	1486	-	-
HCM Lane V/C Ratio	0.01	-	-	0.036	0.101	0.009	-	-
HCM Control Delay (s)	7.3	0	-	9.9	10.2	7.4	0	-
HCM Lane LOS	A	A	-	A	B	A	A	-
HCM 95th %tile Q(veh)	0	-	-	0.1	0.3	0	-	-

This document was created by an application that isn't licensed to use novaPDF.
Purchase a license to generate PDF files without this notice.

Movement	EBL	EBT	EBR	WBL	WBT	WBR	NBL	NBT	NBR	SBL	SBT	SBR
Lane Configurations												
Traffic Volume (veh/h)	14	49	14	13	181	15	32	63	15	6	58	32
Future Volume (veh/h)	14	49	14	13	181	15	32	63	15	6	58	32
Number	7	4	14	3	8	18	5	2	12	1	6	16
Initial Q (Qb), veh	0	0	0	0	0	0	0	0	0	0	0	0
Ped-Bike Adj(A_pbT)	1.00		1.00	1.00		1.00	1.00		1.00	1.00		1.00
Parking Bus, Adj	1.00	1.00	1.00	1.00	1.00	1.00	1.00	1.00	1.00	1.00	1.00	1.00
Adj Sat Flow, veh/h/ln	1863	1863	1863	1863	1863	1863	1900	1863	1900	1900	1863	1900
Adj Flow Rate, veh/h	15	53	15	14	197	16	35	68	16	7	63	35
Adj No. of Lanes	1	1	1	1	1	1	0	2	0	0	2	0
Peak Hour Factor	0.92	0.92	0.92	0.92	0.92	0.92	0.92	0.92	0.92	0.92	0.92	0.92
Percent Heavy Veh, %	2	2	2	2	2	2	2	2	2	2	2	2
Cap, veh/h	579	820	697	706	820	697	397	731	178	121	816	408
Arrive On Green	0.44	0.44	0.44	0.44	0.44	0.44	0.38	0.38	0.38	0.38	0.38	0.38
Sat Flow, veh/h	1164	1863	1583	1328	1863	1583	752	1924	467	104	2147	1073
Grp Volume(v), veh/h	15	53	15	14	197	16	64	0	55	56	0	49
Grp Sat Flow(s),veh/h/ln	1164	1863	1583	1328	1863	1583	1531	0	1613	1819	0	1506
Q Serve(g_s), s	0.4	0.8	0.3	0.3	3.3	0.3	0.0	0.0	1.1	0.0	0.0	1.0
Cycle Q Clear(g_c), s	3.7	0.8	0.3	1.1	3.3	0.3	1.1	0.0	1.1	1.0	0.0	1.0
Prop In Lane	1.00		1.00	1.00		1.00	0.55		0.29	0.13		0.71
Lane Grp Cap(c), veh/h	579	820	697	706	820	697	693	0	613	772	0	572
V/C Ratio(X)	0.03	0.06	0.02	0.02	0.24	0.02	0.09	0.00	0.09	0.07	0.00	0.09
Avail Cap(c_a), veh/h	579	820	697	706	820	697	693	0	613	772	0	572
HCM Platoon Ratio	1.00	1.00	1.00	1.00	1.00	1.00	1.00	1.00	1.00	1.00	1.00	1.00
Upstream Filter(I)	1.00	1.00	1.00	0.90	0.90	0.90	0.96	0.00	0.96	1.00	0.00	1.00
Uniform Delay (d), s/veh	9.9	8.1	7.9	8.4	8.8	7.9	10.0	0.0	10.0	9.9	0.0	9.9
Incr Delay (d2), s/veh	0.0	0.0	0.0	0.0	0.1	0.0	0.3	0.0	0.3	0.2	0.0	0.3
Initial Q Delay(d3),s/veh	0.0	0.0	0.0	0.0	0.0	0.0	0.0	0.0	0.0	0.0	0.0	0.0
%ile BackOfQ(50%),veh/ln	0.1	0.4	0.1	0.1	1.7	0.1	0.6	0.0	0.5	0.5	0.0	0.5
LnGrp Delay(d),s/veh	9.9	8.1	7.9	8.4	8.8	7.9	10.2	0.0	10.2	10.1	0.0	10.2
LnGrp LOS	A	A	A	A	A	A	B		B	B		B
Approach Vol, veh/h		83			227			119			105	
Approach Delay, s/veh		8.4			8.7			10.2			10.2	
Approach LOS		A			A			B			B	

Timer	1	2	3	4	5	6	7	8
Assigned Phs		2		4		6		8
Phs Duration (G+Y+Rc), s		23.5		26.5		23.5		26.5
Change Period (Y+Rc), s		4.5		4.5		4.5		4.5
Max Green Setting (Gmax), s		19.0		22.0		19.0		22.0
Max Q Clear Time (g_c+I1), s		3.1		5.7		3.0		5.3
Green Ext Time (p_c), s		0.3		0.2		0.3		0.7

Intersection Summary	
HCM 2010 Ctrl Delay	9.3
HCM 2010 LOS	A

This document was created by an application that isn't licensed to use novaPDF.
Purchase a license to generate PDF files without this notice.

Movement	EBL	EBT	EBR	WBL	WBT	WBR	NBL	NBT	NBR	SBL	SBT	SBR
Lane Configurations												
Traffic Volume (veh/h)	63	737	37	10	1023	17	25	32	14	20	38	79
Future Volume (veh/h)	63	737	37	10	1023	17	25	32	14	20	38	79
Number	7	4	14	3	8	18	5	2	12	1	6	16
Initial Q (Qb), veh	0	0	0	0	0	0	0	0	0	0	0	0
Ped-Bike Adj(A_pbT)	1.00		1.00	1.00		1.00	1.00		1.00	1.00		1.00
Parking Bus, Adj	1.00	1.00	1.00	1.00	1.00	1.00	1.00	1.00	1.00	1.00	1.00	1.00
Adj Sat Flow, veh/h/ln	1863	1863	1900	1863	1863	1900	1900	1863	1900	1900	1863	1900
Adj Flow Rate, veh/h	68	801	40	11	1112	18	27	35	15	22	41	86
Adj No. of Lanes	1	2	0	1	2	0	0	2	0	0	2	0
Peak Hour Factor	0.92	0.92	0.92	0.92	0.92	0.92	0.92	0.92	0.92	0.92	0.92	0.92
Percent Heavy Veh, %	2	2	2	2	2	2	2	2	2	2	2	2
Cap, veh/h	186	1574	79	271	1635	26	443	604	274	277	493	620
Arrive On Green	0.46	0.46	0.46	0.46	0.46	0.46	0.43	0.43	0.43	0.43	0.43	0.43
Sat Flow, veh/h	496	3431	171	651	3564	58	873	1404	638	519	1146	1441
Grp Volume(v), veh/h	68	413	428	11	552	578	40	0	37	63	0	86
Grp Sat Flow(s),veh/h/ln	496	1770	1833	651	1770	1853	1332	0	1583	1665	0	1441
Q Serve(g_s), s	11.2	14.8	14.8	1.1	22.1	22.1	0.3	0.0	1.2	0.0	0.0	3.3
Cycle Q Clear(g_c), s	33.3	14.8	14.8	15.9	22.1	22.1	3.6	0.0	1.2	1.8	0.0	3.3
Prop In Lane	1.00		0.09	1.00		0.03	0.68		0.40	0.35		1.00
Lane Grp Cap(c), veh/h	186	812	841	271	812	850	640	0	681	770	0	620
V/C Ratio(X)	0.37	0.51	0.51	0.04	0.68	0.68	0.06	0.00	0.05	0.08	0.00	0.14
Avail Cap(c_a), veh/h	250	1042	1079	356	1042	1091	640	0	681	770	0	620
HCM Platoon Ratio	1.00	1.00	1.00	1.00	1.00	1.00	1.00	1.00	1.00	1.00	1.00	1.00
Upstream Filter(I)	1.00	1.00	1.00	0.58	0.58	0.58	1.00	0.00	1.00	1.00	0.00	1.00
Uniform Delay (d), s/veh	32.3	17.2	17.2	22.8	19.2	19.2	15.2	0.0	15.0	15.1	0.0	15.5
Incr Delay (d2), s/veh	1.2	0.5	0.5	0.0	0.7	0.7	0.2	0.0	0.2	0.2	0.0	0.5
Initial Q Delay(d3),s/veh	0.0	0.0	0.0	0.0	0.0	0.0	0.0	0.0	0.0	0.0	0.0	0.0
%ile BackOfQ(50%),veh/ln	1.6	7.3	7.6	0.2	10.9	11.4	0.6	0.0	0.6	1.0	0.0	1.4
LnGrp Delay(d),s/veh	33.5	17.7	17.7	22.9	19.9	19.8	15.4	0.0	15.1	15.3	0.0	16.0
LnGrp LOS	C	B	B	C	B	B	B		B	B		B
Approach Vol, veh/h		909			1141			77			149	
Approach Delay, s/veh		18.9			19.9			15.2			15.7	
Approach LOS		B			B			B			B	

Timer	1	2	3	4	5	6	7	8
Assigned Phs		2		4		6		8
Phs Duration (G+Y+Rc), s		43.7		46.3		43.7		46.3
Change Period (Y+Rc), s		5.0		5.0		5.0		5.0
Max Green Setting (Gmax), s		27.0		53.0		27.0		53.0
Max Q Clear Time (g_c+I1), s		5.6		35.3		5.3		24.1
Green Ext Time (p_c), s		0.3		6.0		0.8		9.1

Intersection Summary	
HCM 2010 Ctrl Delay	19.0
HCM 2010 LOS	B

This document was created by an application that isn't licensed to use novaPDF.
Purchase a license to generate PDF files without this notice.

Movement	EBL	EBT	EBR	WBL	WBT	WBR	NBL	NBT	NBR	SBL	SBT	SBR
Lane Configurations												
Traffic Volume (veh/h)	16	455	34	51	416	71	10	124	15	56	209	26
Future Volume (veh/h)	16	455	34	51	416	71	10	124	15	56	209	26
Number	7	4	14	3	8	18	5	2	12	1	6	16
Initial Q (Qb), veh	0	0	0	0	0	0	0	0	0	0	0	0
Ped-Bike Adj(A_pbT)	1.00		1.00	1.00		1.00	1.00		1.00	1.00		1.00
Parking Bus, Adj	1.00	1.00	1.00	1.00	1.00	1.00	1.00	1.00	1.00	1.00	1.00	1.00
Adj Sat Flow, veh/h/ln	1569	1569	1600	1569	1569	1600	1569	1569	1600	1569	1569	1600
Adj Flow Rate, veh/h	17	495	37	55	452	77	11	135	16	61	227	28
Adj No. of Lanes	1	2	0	1	2	0	1	1	0	1	1	0
Peak Hour Factor	0.92	0.92	0.92	0.92	0.92	0.92	0.92	0.92	0.92	0.92	0.92	0.92
Percent Heavy Veh, %	2	2	2	2	2	2	2	2	2	2	2	2
Cap, veh/h	305	812	61	313	765	130	133	427	51	166	455	56
Arrive On Green	0.08	0.29	0.29	0.09	0.30	0.30	0.18	0.62	0.62	0.11	0.33	0.33
Sat Flow, veh/h	1494	2812	210	1494	2551	432	1494	1377	163	1494	1370	169
Grp Volume(v), veh/h	17	262	270	55	263	266	11	0	151	61	0	255
Grp Sat Flow(s),veh/h/ln	1494	1490	1532	1494	1490	1492	1494	0	1540	1494	0	1539
Q Serve(g_s), s	0.7	13.6	13.7	2.1	13.5	13.7	0.6	0.0	4.2	3.4	0.0	11.9
Cycle Q Clear(g_c), s	0.7	13.6	13.7	2.1	13.5	13.7	0.6	0.0	4.2	3.4	0.0	11.9
Prop In Lane	1.00		0.14	1.00		0.29	1.00		0.11	1.00		0.11
Lane Grp Cap(c), veh/h	305	431	442	313	447	448	133	0	477	166	0	511
V/C Ratio(X)	0.06	0.61	0.61	0.18	0.59	0.59	0.08	0.00	0.32	0.37	0.00	0.50
Avail Cap(c_a), veh/h	305	431	442	313	447	448	133	0	477	166	0	511
HCM Platoon Ratio	1.00	1.00	1.00	1.00	1.00	1.00	2.00	2.00	2.00	1.00	1.00	1.00
Upstream Filter(I)	0.89	0.89	0.89	1.00	1.00	1.00	0.99	0.00	0.99	1.00	0.00	1.00
Uniform Delay (d), s/veh	19.2	27.6	27.6	19.2	26.8	26.8	33.9	0.0	12.6	37.1	0.0	24.1
Incr Delay (d2), s/veh	0.3	5.6	5.5	1.2	5.6	5.7	1.2	0.0	1.7	6.2	0.0	3.5
Initial Q Delay(d3),s/veh	0.0	0.0	0.0	0.0	0.0	0.0	0.0	0.0	0.0	0.0	0.0	0.0
%ile BackOfQ(50%),veh/ln	0.3	6.3	6.5	1.0	6.2	6.3	0.3	0.0	2.0	1.7	0.0	5.5
LnGrp Delay(d),s/veh	19.5	33.2	33.2	20.4	32.4	32.5	35.1	0.0	14.3	43.2	0.0	27.5
LnGrp LOS	B	C	C	C	C	C	D		B	D		C
Approach Vol, veh/h		549			584			162			316	
Approach Delay, s/veh		32.8			31.3			15.7			30.5	
Approach LOS		C			C			B			C	

Timer	1	2	3	4	5	6	7	8
Assigned Phs	1	2	3	4	5	6	7	8
Phs Duration (G+Y+Rc), s	14.0	33.0	12.0	31.0	12.0	35.0	11.0	32.0
Change Period (Y+Rc), s	4.0	5.1	4.0	5.0	4.0	5.1	4.0	5.0
Max Green Setting (Gmax), s	10.0	27.9	8.0	26.0	8.0	29.9	7.0	27.0
Max Q Clear Time (g_c+I1), s	5.4	6.2	4.1	15.7	2.6	13.9	2.7	15.7
Green Ext Time (p_c), s	0.0	0.8	0.0	2.3	0.0	1.3	0.0	2.5

Intersection Summary	
HCM 2010 Ctrl Delay	30.1
HCM 2010 LOS	C

This document was created by an application that isn't licensed to use novaPDF.
Purchase a license to generate PDF files without this notice.

Movement	EBL	EBT	EBR	WBL	WBT	WBR	NBL	NBT	NBR	SBL	SBT	SBR
Lane Configurations												
Traffic Volume (veh/h)	4	21	7	4	30	7	4	165	20	6	252	17
Future Volume (veh/h)	4	21	7	4	30	7	4	165	20	6	252	17
Number	7	4	14	3	8	18	5	2	12	1	6	16
Initial Q (Qb), veh	0	0	0	0	0	0	0	0	0	0	0	0
Ped-Bike Adj(A_pbT)	1.00		1.00	1.00		1.00	1.00		1.00	1.00		1.00
Parking Bus, Adj	1.00	1.00	1.00	1.00	1.00	1.00	1.00	1.00	1.00	1.00	1.00	1.00
Adj Sat Flow, veh/h/ln	1600	1569	1600	1600	1569	1600	1569	1569	1600	1569	1569	1600
Adj Flow Rate, veh/h	4	23	8	4	33	8	4	179	22	7	274	18
Adj No. of Lanes	0	1	0	0	1	0	1	1	0	1	1	0
Peak Hour Factor	0.92	0.92	0.92	0.92	0.92	0.92	0.92	0.92	0.92	0.92	0.92	0.92
Percent Heavy Veh, %	2	2	2	2	2	2	2	2	2	2	2	2
Cap, veh/h	51	83	26	48	91	21	133	920	113	149	993	65
Arrive On Green	0.08	0.08	0.08	0.08	0.08	0.08	0.18	1.00	1.00	0.20	1.00	1.00
Sat Flow, veh/h	78	1064	338	61	1172	267	1494	1370	168	1494	1456	96
Grp Volume(v), veh/h	35	0	0	45	0	0	4	0	201	7	0	292
Grp Sat Flow(s),veh/h/ln	1480	0	0	1500	0	0	1494	0	1539	1494	0	1552
Q Serve(g_s), s	0.0	0.0	0.0	0.0	0.0	0.0	0.2	0.0	0.0	0.3	0.0	0.0
Cycle Q Clear(g_c), s	2.0	0.0	0.0	2.5	0.0	0.0	0.2	0.0	0.0	0.3	0.0	0.0
Prop In Lane	0.11		0.23	0.09		0.18	1.00		0.11	1.00		0.06
Lane Grp Cap(c), veh/h	160	0	0	160	0	0	133	0	1033	149	0	1059
V/C Ratio(X)	0.22	0.00	0.00	0.28	0.00	0.00	0.03	0.00	0.19	0.05	0.00	0.28
Avail Cap(c_a), veh/h	504	0	0	511	0	0	166	0	1033	183	0	1059
HCM Platoon Ratio	1.00	1.00	1.00	1.00	1.00	1.00	2.00	2.00	2.00	2.00	2.00	2.00
Upstream Filter(I)	1.00	0.00	0.00	1.00	0.00	0.00	0.99	0.00	0.99	0.90	0.00	0.90
Uniform Delay (d), s/veh	39.2	0.0	0.0	39.4	0.0	0.0	33.8	0.0	0.0	32.5	0.0	0.0
Incr Delay (d2), s/veh	0.7	0.0	0.0	0.9	0.0	0.0	0.1	0.0	0.4	0.1	0.0	0.6
Initial Q Delay(d3),s/veh	0.0	0.0	0.0	0.0	0.0	0.0	0.0	0.0	0.0	0.0	0.0	0.0
%ile BackOfQ(50%),veh/ln	0.8	0.0	0.0	1.1	0.0	0.0	0.1	0.0	0.1	0.1	0.0	0.2
LnGrp Delay(d),s/veh	39.9	0.0	0.0	40.4	0.0	0.0	33.9	0.0	0.4	32.7	0.0	0.6
LnGrp LOS	D			D			C		A	C		A
Approach Vol, veh/h		35			45			205			299	
Approach Delay, s/veh		39.9			40.4			1.1			1.3	
Approach LOS		D			D			A			A	

Timer	1	2	3	4	5	6	7	8
Assigned Phs	1	2		4	5	6		8
Phs Duration (G+Y+Rc), s	13.0	65.4		11.6	12.0	66.4		11.6
Change Period (Y+Rc), s	4.0	5.0		4.6	4.0	5.0		4.6
Max Green Setting (Gmax), s	11.0	37.0		28.4	10.0	38.0		28.4
Max Q Clear Time (g_c+I1), s	2.3	2.0		4.0	2.2	2.0		4.5
Green Ext Time (p_c), s	0.0	1.2		0.1	0.0	1.9		0.2

Intersection Summary	
HCM 2010 Ctrl Delay	6.6
HCM 2010 LOS	A

This document was created by an application that isn't licensed to use novaPDF.
Purchase a license to generate PDF files without this notice.

Movement	EBL	EBT	EBR	WBL	WBT	WBR	NBL	NBT	NBR	SBL	SBT	SBR
Lane Configurations												
Traffic Volume (veh/h)	20	127	35	16	58	11	20	169	60	17	239	15
Future Volume (veh/h)	20	127	35	16	58	11	20	169	60	17	239	15
Number	7	4	14	3	8	18	5	2	12	1	6	16
Initial Q (Qb), veh	0	0	0	0	0	0	0	0	0	0	0	0
Ped-Bike Adj(A_pbT)	1.00		1.00	1.00		1.00	1.00		1.00	1.00		1.00
Parking Bus, Adj	1.00	1.00	1.00	1.00	1.00	1.00	1.00	1.00	1.00	1.00	1.00	1.00
Adj Sat Flow, veh/h/ln	1863	1863	1900	1863	1863	1900	1863	1863	1900	1863	1863	1900
Adj Flow Rate, veh/h	22	138	38	17	63	12	22	184	65	18	260	16
Adj No. of Lanes	1	2	0	1	2	0	1	1	0	1	1	0
Peak Hour Factor	0.92	0.92	0.92	0.92	0.92	0.92	0.92	0.92	0.92	0.92	0.92	0.92
Percent Heavy Veh, %	2	2	2	2	2	2	2	2	2	2	2	2
Cap, veh/h	171	247	66	128	267	49	158	862	304	177	1157	71
Arrive On Green	0.09	0.09	0.09	0.09	0.09	0.09	0.18	1.00	1.00	0.20	1.00	1.00
Sat Flow, veh/h	1319	2764	738	1204	2982	553	1774	1316	465	1774	1737	107
Grp Volume(v), veh/h	22	87	89	17	37	38	22	0	249	18	0	276
Grp Sat Flow(s),veh/h/ln	1319	1770	1732	1204	1770	1765	1774	0	1781	1774	0	1844
Q Serve(g_s), s	1.4	4.2	4.4	1.2	1.7	1.8	0.9	0.0	0.0	0.7	0.0	0.0
Cycle Q Clear(g_c), s	3.2	4.2	4.4	5.7	1.7	1.8	0.9	0.0	0.0	0.7	0.0	0.0
Prop In Lane	1.00		0.43	1.00		0.31	1.00		0.26	1.00		0.06
Lane Grp Cap(c), veh/h	171	158	155	128	158	158	158	0	1166	177	0	1228
V/C Ratio(X)	0.13	0.55	0.58	0.13	0.23	0.24	0.14	0.00	0.21	0.10	0.00	0.22
Avail Cap(c_a), veh/h	478	570	558	408	570	569	217	0	1166	217	0	1228
HCM Platoon Ratio	1.00	1.00	1.00	1.00	1.00	1.00	2.00	2.00	2.00	2.00	2.00	2.00
Upstream Filter(I)	0.99	0.99	0.99	1.00	1.00	1.00	0.93	0.00	0.93	0.97	0.00	0.97
Uniform Delay (d), s/veh	39.6	39.2	39.3	42.1	38.1	38.1	34.1	0.0	0.0	32.7	0.0	0.0
Incr Delay (d2), s/veh	0.3	2.9	3.3	0.5	0.7	0.8	0.4	0.0	0.4	0.2	0.0	0.4
Initial Q Delay(d3),s/veh	0.0	0.0	0.0	0.0	0.0	0.0	0.0	0.0	0.0	0.0	0.0	0.0
%ile BackOfQ(50%),veh/ln	0.5	2.2	2.3	0.4	0.9	0.9	0.5	0.0	0.1	0.4	0.0	0.1
LnGrp Delay(d),s/veh	40.0	42.2	42.7	42.5	38.8	38.9	34.5	0.0	0.4	32.9	0.0	0.4
LnGrp LOS	D	D	D	D	D	D	C		A	C		A
Approach Vol, veh/h		198			92			271			294	
Approach Delay, s/veh		42.1			39.6			3.2			2.4	
Approach LOS		D			D			A			A	

Timer	1	2	3	4	5	6	7	8
Assigned Phs	1	2		4	5	6		8
Phs Duration (G+Y+Rc), s	13.0	63.9		13.1	12.0	64.9		13.1
Change Period (Y+Rc), s	4.0	5.0		5.0	4.0	5.0		5.0
Max Green Setting (Gmax), s	11.0	36.0		29.0	11.0	36.0		29.0
Max Q Clear Time (g_c+I1), s	2.7	2.0		6.4	2.9	2.0		7.7
Green Ext Time (p_c), s	0.0	1.6		1.0	0.0	1.7		0.4

Intersection Summary	
HCM 2010 Ctrl Delay	15.8
HCM 2010 LOS	B

This document was created by an application that isn't licensed to use novaPDF.
Purchase a license to generate PDF files without this notice.

Movement	EBL	EBT	EBR	WBL	WBT	WBR	NBL	NBT	NBR	SBL	SBT	SBR
Lane Configurations												
Traffic Volume (veh/h)	118	1510	51	17	702	15	29	115	37	35	194	39
Future Volume (veh/h)	118	1510	51	17	702	15	29	115	37	35	194	39
Number	7	4	14	3	8	18	5	2	12	1	6	16
Initial Q (Qb), veh	0	0	0	0	0	0	0	0	0	0	0	0
Ped-Bike Adj(A_pbT)	1.00		1.00	1.00		1.00	1.00		1.00	1.00		1.00
Parking Bus, Adj	1.00	1.00	1.00	1.00	1.00	1.00	1.00	1.00	1.00	1.00	1.00	1.00
Adj Sat Flow, veh/h/ln	1863	1863	1900	1863	1863	1900	1863	1863	1900	1863	1863	1900
Adj Flow Rate, veh/h	128	1641	55	18	763	16	32	125	40	38	211	42
Adj No. of Lanes	1	2	0	1	2	0	1	1	0	1	1	0
Peak Hour Factor	0.92	0.92	0.92	0.92	0.92	0.92	0.92	0.92	0.92	0.92	0.92	0.92
Percent Heavy Veh, %	2	2	2	2	2	2	2	2	2	2	2	2
Cap, veh/h	243	1398	47	80	1418	30	98	503	161	109	571	114
Arrive On Green	0.80	0.80	0.80	0.40	0.40	0.40	0.06	0.37	0.37	0.12	0.76	0.76
Sat Flow, veh/h	690	3495	117	288	3545	74	1774	1353	433	1774	1509	300
Grp Volume(v), veh/h	128	828	868	18	381	398	32	0	165	38	0	253
Grp Sat Flow(s),veh/h/ln	690	1770	1842	288	1770	1850	1774	0	1786	1774	0	1810
Q Serve(g_s), s	14.0	36.0	36.0	0.0	14.8	14.8	1.6	0.0	5.8	1.8	0.0	4.3
Cycle Q Clear(g_c), s	28.8	36.0	36.0	36.0	14.8	14.8	1.6	0.0	5.8	1.8	0.0	4.3
Prop In Lane	1.00		0.06	1.00		0.04	1.00		0.24	1.00		0.17
Lane Grp Cap(c), veh/h	243	708	737	80	708	740	98	0	665	109	0	685
V/C Ratio(X)	0.53	1.17	1.18	0.22	0.54	0.54	0.33	0.00	0.25	0.35	0.00	0.37
Avail Cap(c_a), veh/h	243	708	737	80	708	740	187	0	665	197	0	685
HCM Platoon Ratio	2.00	2.00	2.00	1.00	1.00	1.00	1.00	1.00	1.00	2.00	2.00	2.00
Upstream Filter(I)	0.41	0.41	0.41	1.00	1.00	1.00	1.00	0.00	1.00	0.98	0.00	0.98
Uniform Delay (d), s/veh	14.5	9.0	9.0	45.0	20.6	20.6	40.9	0.0	19.6	37.8	0.0	7.3
Incr Delay (d2), s/veh	1.2	83.3	86.1	2.0	1.1	1.0	1.9	0.0	0.9	1.9	0.0	1.5
Initial Q Delay(d3),s/veh	0.0	0.0	0.0	0.0	0.0	0.0	0.0	0.0	0.0	0.0	0.0	0.0
%ile BackOfQ(50%),veh/ln	2.7	32.1	34.4	0.5	7.4	7.7	0.8	0.0	3.0	0.9	0.0	2.2
LnGrp Delay(d),s/veh	15.7	92.3	95.1	47.0	21.7	21.7	42.8	0.0	20.4	39.7	0.0	8.8
LnGrp LOS	B	F	F	D	C	C	D		C	D		A
Approach Vol, veh/h		1824			797			197			291	
Approach Delay, s/veh		88.2			22.3			24.1			12.9	
Approach LOS		F			C			C			B	

Timer	1	2	3	4	5	6	7	8
Assigned Phs	1	2		4	5	6		8
Phs Duration (G+Y+Rc), s	9.5	39.5		41.0	9.0	40.0		41.0
Change Period (Y+Rc), s	4.0	6.0		5.0	4.0	6.0		5.0
Max Green Setting (Gmax), s	5.0	29.0		36.0	9.5	29.5		36.0
Max Q Clear Time (g_c+I1), s	3.8	7.8		38.0	3.6	6.3		38.0
Green Ext Time (p_c), s	0.0	1.2		0.0	0.0	2.1		0.0

Intersection Summary	
HCM 2010 Ctrl Delay	60.2
HCM 2010 LOS	E

This document was created by an application that isn't licensed to use novaPDF.
Purchase a license to generate PDF files without this notice.

Movement	EBL	EBT	EBR	WBL	WBT	WBR	NBL	NBT	NBR	SBL	SBT	SBR
Lane Configurations												
Traffic Volume (veh/h)	11	478	87	31	389	22	12	35	15	15	88	17
Future Volume (veh/h)	11	478	87	31	389	22	12	35	15	15	88	17
Number	7	4	14	3	8	18	5	2	12	1	6	16
Initial Q (Qb), veh	0	0	0	0	0	0	0	0	0	0	0	0
Ped-Bike Adj(A_pbT)	1.00		1.00	1.00		1.00	1.00		1.00	1.00		1.00
Parking Bus, Adj	1.00	1.00	1.00	1.00	1.00	1.00	1.00	1.00	1.00	1.00	1.00	1.00
Adj Sat Flow, veh/h/ln	1900	1863	1900	1900	1863	1900	1900	1863	1900	1900	1863	1900
Adj Flow Rate, veh/h	12	520	95	34	423	24	13	38	16	16	96	18
Adj No. of Lanes	0	2	0	0	2	0	0	2	0	0	2	0
Peak Hour Factor	0.92	0.92	0.92	0.92	0.92	0.92	0.92	0.92	0.92	0.92	0.92	0.92
Percent Heavy Veh, %	2	2	2	2	2	2	2	2	2	2	2	2
Cap, veh/h	83	1220	219	130	1298	72	278	732	303	191	998	180
Arrive On Green	0.42	0.42	0.42	0.42	0.42	0.42	0.38	0.38	0.38	0.38	0.38	0.38
Sat Flow, veh/h	20	2904	522	115	3091	171	473	1927	797	270	2625	475
Grp Volume(v), veh/h	335	0	292	247	0	234	36	0	31	69	0	61
Grp Sat Flow(s),veh/h/ln	1843	0	1603	1712	0	1665	1644	0	1554	1759	0	1611
Q Serve(g_s), s	0.0	0.0	6.5	0.0	0.0	4.7	0.0	0.0	0.6	0.0	0.0	1.2
Cycle Q Clear(g_c), s	6.4	0.0	6.5	4.4	0.0	4.7	0.6	0.0	0.6	1.2	0.0	1.2
Prop In Lane	0.04		0.33	0.14		0.10	0.36		0.51	0.23		0.29
Lane Grp Cap(c), veh/h	849	0	673	801	0	699	723	0	591	757	0	612
V/C Ratio(X)	0.39	0.00	0.43	0.31	0.00	0.33	0.05	0.00	0.05	0.09	0.00	0.10
Avail Cap(c_a), veh/h	849	0	673	801	0	699	723	0	591	757	0	612
HCM Platoon Ratio	1.00	1.00	1.00	1.00	1.00	1.00	1.00	1.00	1.00	1.00	1.00	1.00
Upstream Filter(I)	1.00	0.00	1.00	0.78	0.00	0.78	1.00	0.00	1.00	1.00	0.00	1.00
Uniform Delay (d), s/veh	10.3	0.0	10.3	9.7	0.0	9.8	9.8	0.0	9.8	10.0	0.0	10.0
Incr Delay (d2), s/veh	0.3	0.0	0.4	0.2	0.0	0.2	0.1	0.0	0.2	0.2	0.0	0.3
Initial Q Delay(d3),s/veh	0.0	0.0	0.0	0.0	0.0	0.0	0.0	0.0	0.0	0.0	0.0	0.0
%ile BackOfQ(50%),veh/ln	3.3	0.0	2.9	2.3	0.0	2.2	0.3	0.0	0.3	0.7	0.0	0.6
LnGrp Delay(d),s/veh	10.6	0.0	10.7	9.9	0.0	10.0	9.9	0.0	10.0	10.2	0.0	10.3
LnGrp LOS	B		B	A		B	A		A	B		B
Approach Vol, veh/h		627			481			67			130	
Approach Delay, s/veh		10.6			9.9			10.0			10.3	
Approach LOS		B			A			A			B	

Timer	1	2	3	4	5	6	7	8
Assigned Phs		2		4		6		8
Phs Duration (G+Y+Rc), s		24.0		26.0		24.0		26.0
Change Period (Y+Rc), s		5.0		5.0		5.0		5.0
Max Green Setting (Gmax), s		19.0		21.0		19.0		21.0
Max Q Clear Time (g_c+I1), s		2.6		8.5		3.2		6.7
Green Ext Time (p_c), s		0.2		3.2		0.5		2.6

Intersection Summary	
HCM 2010 Ctrl Delay	10.3
HCM 2010 LOS	B

This document was created by an application that isn't licensed to use novaPDF.
Purchase a license to generate PDF files without this notice.

Intersection	
Int Delay, s/veh	3.2

Movement	EBL	EBT	EBR	WBL	WBT	WBR	NBL	NBT	NBR	SBL	SBT	SBR
Lane Configurations												
Traffic Vol, veh/h	6	13	33	26	13	8	15	74	13	7	185	4
Future Vol, veh/h	6	13	33	26	13	8	15	74	13	7	185	4
Conflicting Peds, #/hr	0	0	0	0	0	0	0	0	0	0	0	0
Sign Control	Stop	Stop	Stop	Stop	Stop	Stop	Free	Free	Free	Free	Free	Free
RT Channelized	-	-	None	-	-	None	-	-	None	-	-	None
Storage Length	-	-	-	-	-	-	-	-	0	-	-	0
Veh in Median Storage, #	-	0	-	-	0	-	-	0	-	-	0	-
Grade, %	-	0	-	-	0	-	-	0	-	-	0	-
Peak Hour Factor	92	92	92	92	92	92	92	92	92	92	92	92
Heavy Vehicles, %	2	2	2	2	2	2	2	2	2	2	2	2
Mvmt Flow	7	14	36	28	14	9	16	80	14	8	201	4

Major/Minor	Minor2			Minor1			Major1			Major2		
Conflicting Flow All	348	343	201	356	333	80	205	0	0	94	0	0
Stage 1	217	217	-	112	112	-	-	-	-	-	-	-
Stage 2	131	126	-	244	221	-	-	-	-	-	-	-
Critical Hdwy	7.12	6.52	6.22	7.12	6.52	6.22	4.12	-	-	4.12	-	-
Critical Hdwy Stg 1	6.12	5.52	-	6.12	5.52	-	-	-	-	-	-	-
Critical Hdwy Stg 2	6.12	5.52	-	6.12	5.52	-	-	-	-	-	-	-
Follow-up Hdwy	3.518	4.018	3.318	3.518	4.018	3.318	2.218	-	-	2.218	-	-
Pot Cap-1 Maneuver	607	579	840	599	587	980	1366	-	-	1500	-	-
Stage 1	785	723	-	893	803	-	-	-	-	-	-	-
Stage 2	873	792	-	760	720	-	-	-	-	-	-	-
Platoon blocked, %								-	-		-	-
Mov Cap-1 Maneuver	582	569	840	555	576	980	1366	-	-	1500	-	-
Mov Cap-2 Maneuver	582	569	-	555	576	-	-	-	-	-	-	-
Stage 1	776	719	-	882	793	-	-	-	-	-	-	-
Stage 2	840	782	-	709	716	-	-	-	-	-	-	-

Approach	EB	WB	NB	SB
HCM Control Delay, s	10.4	11.5	1.1	0.3
HCM LOS	B	B		

Minor Lane/Major Mvmt	NBL	NBT	NBR	EBLn1	WBLn1	SBL	SBT	SBR
Capacity (veh/h)	1366	-	-	718	606	1500	-	-
HCM Lane V/C Ratio	0.012	-	-	0.079	0.084	0.005	-	-
HCM Control Delay (s)	7.7	0	-	10.4	11.5	7.4	0	-
HCM Lane LOS	A	A	-	B	B	A	A	-
HCM 95th %tile Q(veh)	0	-	-	0.3	0.3	0	-	-

This document was created by an application that isn't licensed to use novaPDF.
Purchase a license to generate PDF files without this notice.

Movement	EBL	EBT	EBR	WBL	WBT	WBR	NBL	NBT	NBR	SBL	SBT	SBR
Lane Configurations												
Traffic Volume (veh/h)	30	113	26	16	61	17	21	74	53	21	61	73
Future Volume (veh/h)	30	113	26	16	61	17	21	74	53	21	61	73
Number	7	4	14	3	8	18	5	2	12	1	6	16
Initial Q (Qb), veh	0	0	0	0	0	0	0	0	0	0	0	0
Ped-Bike Adj(A_pbT)	1.00		1.00	1.00		1.00	1.00		1.00	1.00		1.00
Parking Bus, Adj	1.00	1.00	1.00	1.00	1.00	1.00	1.00	1.00	1.00	1.00	1.00	1.00
Adj Sat Flow, veh/h/ln	1863	1863	1863	1863	1863	1863	1900	1863	1900	1900	1863	1900
Adj Flow Rate, veh/h	33	123	28	17	66	18	23	80	58	23	66	79
Adj No. of Lanes	1	1	1	1	1	1	0	2	0	0	2	0
Peak Hour Factor	0.92	0.92	0.92	0.92	0.92	0.92	0.92	0.92	0.92	0.92	0.92	0.92
Percent Heavy Veh, %	2	2	2	2	2	2	2	2	2	2	2	2
Cap, veh/h	693	820	697	637	820	697	212	653	439	207	534	548
Arrive On Green	0.44	0.44	0.44	0.44	0.44	0.44	0.38	0.38	0.38	0.38	0.38	0.38
Sat Flow, veh/h	1308	1863	1583	1231	1863	1583	318	1720	1156	305	1406	1441
Grp Volume(v), veh/h	33	123	28	17	66	18	86	0	75	89	0	79
Grp Sat Flow(s),veh/h/ln	1308	1863	1583	1231	1863	1583	1702	0	1491	1712	0	1441
Q Serve(g_s), s	0.8	2.0	0.5	0.4	1.0	0.3	0.0	0.0	1.6	0.0	0.0	1.8
Cycle Q Clear(g_c), s	1.8	2.0	0.5	2.4	1.0	0.3	1.5	0.0	1.6	1.6	0.0	1.8
Prop In Lane	1.00		1.00	1.00		1.00	0.27		0.77	0.26		1.00
Lane Grp Cap(c), veh/h	693	820	697	637	820	697	738	0	567	741	0	548
V/C Ratio(X)	0.05	0.15	0.04	0.03	0.08	0.03	0.12	0.00	0.13	0.12	0.00	0.14
Avail Cap(c_a), veh/h	693	820	697	637	820	697	738	0	567	741	0	548
HCM Platoon Ratio	1.00	1.00	1.00	1.00	1.00	1.00	1.00	1.00	1.00	1.00	1.00	1.00
Upstream Filter(I)	1.00	1.00	1.00	0.99	0.99	0.99	0.99	0.00	0.99	1.00	0.00	1.00
Uniform Delay (d), s/veh	8.6	8.4	8.0	9.1	8.1	7.9	10.1	0.0	10.1	10.1	0.0	10.2
Incr Delay (d2), s/veh	0.0	0.0	0.0	0.0	0.0	0.0	0.3	0.0	0.5	0.3	0.0	0.6
Initial Q Delay(d3),s/veh	0.0	0.0	0.0	0.0	0.0	0.0	0.0	0.0	0.0	0.0	0.0	0.0
%ile BackOfQ(50%),veh/ln	0.3	1.0	0.2	0.1	0.5	0.1	0.8	0.0	0.7	0.9	0.0	0.8
LnGrp Delay(d),s/veh	8.7	8.4	8.0	9.1	8.1	7.9	10.4	0.0	10.6	10.4	0.0	10.7
LnGrp LOS	A	A	A	A	A	A	B		B	B		B
Approach Vol, veh/h		184			101			161			168	
Approach Delay, s/veh		8.4			8.3			10.5			10.6	
Approach LOS		A			A			B			B	

Timer	1	2	3	4	5	6	7	8
Assigned Phs		2		4		6		8
Phs Duration (G+Y+Rc), s		23.5		26.5		23.5		26.5
Change Period (Y+Rc), s		4.5		4.5		4.5		4.5
Max Green Setting (Gmax), s		19.0		22.0		19.0		22.0
Max Q Clear Time (g_c+I1), s		3.6		4.0		3.8		4.4
Green Ext Time (p_c), s		0.5		0.5		0.5		0.2

Intersection Summary	
HCM 2010 Ctrl Delay	9.5
HCM 2010 LOS	A

This document was created by an application that isn't licensed to use novaPDF.
Purchase a license to generate PDF files without this notice.

Movement	EBL	EBT	EBR	WBL	WBT	WBR	NBL	NBT	NBR	SBL	SBT	SBR
Lane Configurations												
Traffic Volume (veh/h)	89	1690	10	10	738	29	7	25	8	17	29	16
Future Volume (veh/h)	89	1690	10	10	738	29	7	25	8	17	29	16
Number	7	4	14	3	8	18	5	2	12	1	6	16
Initial Q (Qb), veh	0	0	0	0	0	0	0	0	0	0	0	0
Ped-Bike Adj(A_pbT)	1.00		1.00	1.00		1.00	1.00		1.00	1.00		1.00
Parking Bus, Adj	1.00	1.00	1.00	1.00	1.00	1.00	1.00	1.00	1.00	1.00	1.00	1.00
Adj Sat Flow, veh/h/ln	1863	1863	1900	1863	1863	1900	1900	1863	1900	1900	1863	1900
Adj Flow Rate, veh/h	97	1837	11	11	802	32	8	27	9	18	32	17
Adj No. of Lanes	1	2	0	1	2	0	0	2	0	0	2	0
Peak Hour Factor	0.92	0.92	0.92	0.92	0.92	0.92	0.92	0.92	0.92	0.92	0.92	0.92
Percent Heavy Veh, %	2	2	2	2	2	2	2	2	2	2	2	2
Cap, veh/h	382	2110	13	118	2030	81	201	632	209	283	476	256
Arrive On Green	0.58	0.58	0.58	0.58	0.58	0.58	0.30	0.30	0.30	0.30	0.30	0.30
Sat Flow, veh/h	656	3607	22	249	3470	138	486	2081	686	735	1565	843
Grp Volume(v), veh/h	97	900	948	11	409	425	23	0	21	36	0	31
Grp Sat Flow(s),veh/h/ln	656	1770	1859	249	1770	1838	1679	0	1574	1596	0	1546
Q Serve(g_s), s	8.4	38.7	38.8	3.5	11.2	11.2	0.0	0.0	0.8	0.0	0.0	1.3
Cycle Q Clear(g_c), s	19.7	38.7	38.8	42.4	11.2	11.2	0.8	0.0	0.8	1.2	0.0	1.3
Prop In Lane	1.00		0.01	1.00		0.08	0.34		0.44	0.50		0.54
Lane Grp Cap(c), veh/h	382	1035	1087	118	1035	1075	564	0	478	545	0	470
V/C Ratio(X)	0.25	0.87	0.87	0.09	0.40	0.40	0.04	0.00	0.04	0.07	0.00	0.07
Avail Cap(c_a), veh/h	406	1101	1157	127	1101	1144	564	0	478	545	0	470
HCM Platoon Ratio	1.00	1.00	1.00	1.00	1.00	1.00	1.00	1.00	1.00	1.00	1.00	1.00
Upstream Filter(I)	1.00	1.00	1.00	0.92	0.92	0.92	1.00	0.00	1.00	1.00	0.00	1.00
Uniform Delay (d), s/veh	15.4	15.8	15.8	33.7	10.1	10.1	22.1	0.0	22.1	22.2	0.0	22.3
Incr Delay (d2), s/veh	0.3	7.4	7.1	0.3	0.2	0.2	0.1	0.0	0.2	0.2	0.0	0.3
Initial Q Delay(d3),s/veh	0.0	0.0	0.0	0.0	0.0	0.0	0.0	0.0	0.0	0.0	0.0	0.0
%ile BackOfQ(50%),veh/ln	1.5	20.9	21.9	0.3	5.5	5.7	0.4	0.0	0.4	0.7	0.0	0.6
LnGrp Delay(d),s/veh	15.7	23.2	23.0	34.0	10.3	10.3	22.2	0.0	22.3	22.5	0.0	22.5
LnGrp LOS	B	C	C	C	B	B	C		C	C		C
Approach Vol, veh/h		1945			845			44			67	
Approach Delay, s/veh		22.7			10.6			22.2			22.5	
Approach LOS		C			B			C			C	

Timer	1	2	3	4	5	6	7	8
Assigned Phs		2		4		6		8
Phs Duration (G+Y+Rc), s		32.4		57.6		32.4		57.6
Change Period (Y+Rc), s		5.0		5.0		5.0		5.0
Max Green Setting (Gmax), s		24.0		56.0		24.0		56.0
Max Q Clear Time (g_c+I1), s		2.8		40.8		3.3		44.4
Green Ext Time (p_c), s		0.1		11.8		0.3		4.3

Intersection Summary	
HCM 2010 Ctrl Delay	19.2
HCM 2010 LOS	B

This document was created by an application that isn't licensed to use novaPDF.
Purchase a license to generate PDF files without this notice.

Movement	EBL	EBT	EBR	WBL	WBT	WBR	NBL	NBT	NBR	SBL	SBT	SBR
Lane Configurations												
Traffic Volume (veh/h)	53	472	33	42	566	77	37	348	49	56	244	41
Future Volume (veh/h)	53	472	33	42	566	77	37	348	49	56	244	41
Number	7	4	14	3	8	18	5	2	12	1	6	16
Initial Q (Qb), veh	0	0	0	0	0	0	0	0	0	0	0	0
Ped-Bike Adj(A_pbT)	1.00		1.00	1.00		1.00	1.00		1.00	1.00		1.00
Parking Bus, Adj	1.00	1.00	1.00	1.00	1.00	1.00	1.00	1.00	1.00	1.00	1.00	1.00
Adj Sat Flow, veh/h/ln	1569	1569	1600	1569	1569	1600	1569	1569	1600	1569	1569	1600
Adj Flow Rate, veh/h	58	513	36	46	615	84	40	378	53	61	265	45
Adj No. of Lanes	1	2	0	1	2	0	1	1	0	1	1	0
Peak Hour Factor	0.92	0.92	0.92	0.92	0.92	0.92	0.92	0.92	0.92	0.92	0.92	0.92
Percent Heavy Veh, %	2	2	2	2	2	2	2	2	2	2	2	2
Cap, veh/h	250	785	55	305	762	104	133	423	59	168	442	75
Arrive On Green	0.08	0.28	0.28	0.09	0.29	0.29	0.18	0.63	0.63	0.11	0.34	0.34
Sat Flow, veh/h	1494	2826	198	1494	2636	359	1494	1347	189	1494	1307	222
Grp Volume(v), veh/h	58	270	279	46	347	352	40	0	431	61	0	310
Grp Sat Flow(s),veh/h/ln	1494	1490	1534	1494	1490	1505	1494	0	1535	1494	0	1529
Q Serve(g_s), s	2.3	14.4	14.5	1.8	19.4	19.5	2.1	0.0	21.4	3.4	0.0	15.2
Cycle Q Clear(g_c), s	2.3	14.4	14.5	1.8	19.4	19.5	2.1	0.0	21.4	3.4	0.0	15.2
Prop In Lane	1.00		0.13	1.00		0.24	1.00		0.12	1.00		0.15
Lane Grp Cap(c), veh/h	250	414	426	305	431	435	133	0	483	168	0	517
V/C Ratio(X)	0.23	0.65	0.65	0.15	0.81	0.81	0.30	0.00	0.89	0.36	0.00	0.60
Avail Cap(c_a), veh/h	250	414	426	305	431	435	133	0	483	168	0	517
HCM Platoon Ratio	1.00	1.00	1.00	1.00	1.00	1.00	2.00	2.00	2.00	1.00	1.00	1.00
Upstream Filter(I)	0.89	0.89	0.89	1.00	1.00	1.00	0.89	0.00	0.89	1.00	0.00	1.00
Uniform Delay (d), s/veh	21.2	28.7	28.7	19.5	29.7	29.7	34.6	0.0	15.4	37.0	0.0	24.8
Incr Delay (d2), s/veh	1.9	7.0	6.8	1.0	14.9	14.9	5.1	0.0	19.7	6.0	0.0	5.1
Initial Q Delay(d3),s/veh	0.0	0.0	0.0	0.0	0.0	0.0	0.0	0.0	0.0	0.0	0.0	0.0
%ile BackOfQ(50%),veh/ln	1.1	6.7	6.9	0.8	9.8	9.9	1.1	0.0	11.2	1.7	0.0	7.1
LnGrp Delay(d),s/veh	23.1	35.6	35.5	20.6	44.5	44.6	39.7	0.0	35.1	43.0	0.0	29.8
LnGrp LOS	C	D	D	C	D	D	D		D	D		C
Approach Vol, veh/h		607			745			471			371	
Approach Delay, s/veh		34.4			43.1			35.5			32.0	
Approach LOS		C			D			D			C	

Timer	1	2	3	4	5	6	7	8
Assigned Phs	1	2	3	4	5	6	7	8
Phs Duration (G+Y+Rc), s	14.1	33.4	12.5	30.0	12.0	35.5	11.5	31.0
Change Period (Y+Rc), s	4.0	5.1	4.0	5.0	4.0	5.1	4.0	5.0
Max Green Setting (Gmax), s	10.1	28.3	8.5	25.0	8.0	30.4	7.5	26.0
Max Q Clear Time (g_c+I1), s	5.4	23.4	3.8	16.5	4.1	17.2	4.3	21.5
Green Ext Time (p_c), s	0.0	1.2	0.0	2.2	0.0	1.5	0.0	1.8

Intersection Summary	
HCM 2010 Ctrl Delay	37.2
HCM 2010 LOS	D

This document was created by an application that isn't licensed to use novaPDF.
Purchase a license to generate PDF files without this notice.

Movement	EBL	EBT	EBR	WBL	WBT	WBR	NBL	NBT	NBR	SBL	SBT	SBR
Lane Configurations												
Traffic Volume (veh/h)	26	37	17	14	34	21	26	396	14	7	311	13
Future Volume (veh/h)	26	37	17	14	34	21	26	396	14	7	311	13
Number	7	4	14	3	8	18	5	2	12	1	6	16
Initial Q (Qb), veh	0	0	0	0	0	0	0	0	0	0	0	0
Ped-Bike Adj(A_pbT)	1.00		1.00	1.00		1.00	1.00		1.00	1.00		1.00
Parking Bus, Adj	1.00	1.00	1.00	1.00	1.00	1.00	1.00	1.00	1.00	1.00	1.00	1.00
Adj Sat Flow, veh/h/ln	1600	1569	1600	1600	1569	1600	1569	1569	1600	1569	1569	1600
Adj Flow Rate, veh/h	28	40	18	15	37	23	28	430	15	8	338	14
Adj No. of Lanes	0	1	0	0	1	0	1	1	0	1	1	0
Peak Hour Factor	0.92	0.92	0.92	0.92	0.92	0.92	0.92	0.92	0.92	0.92	0.92	0.92
Percent Heavy Veh, %	2	2	2	2	2	2	2	2	2	2	2	2
Cap, veh/h	82	65	25	63	68	37	133	1005	35	149	1014	42
Arrive On Green	0.08	0.08	0.08	0.08	0.08	0.08	0.18	1.00	1.00	0.20	1.00	1.00
Sat Flow, veh/h	360	791	304	189	835	453	1494	1507	53	1494	1496	62
Grp Volume(v), veh/h	86	0	0	75	0	0	28	0	445	8	0	352
Grp Sat Flow(s),veh/h/ln	1455	0	0	1476	0	0	1494	0	1559	1494	0	1558
Q Serve(g_s), s	0.7	0.0	0.0	0.0	0.0	0.0	1.4	0.0	0.0	0.4	0.0	0.0
Cycle Q Clear(g_c), s	5.0	0.0	0.0	4.3	0.0	0.0	1.4	0.0	0.0	0.4	0.0	0.0
Prop In Lane	0.33		0.21	0.20		0.31	1.00		0.03	1.00		0.04
Lane Grp Cap(c), veh/h	172	0	0	169	0	0	133	0	1040	149	0	1056
V/C Ratio(X)	0.50	0.00	0.00	0.44	0.00	0.00	0.21	0.00	0.43	0.05	0.00	0.33
Avail Cap(c_a), veh/h	457	0	0	462	0	0	143	0	1040	159	0	1056
HCM Platoon Ratio	1.00	1.00	1.00	1.00	1.00	1.00	2.00	2.00	2.00	2.00	2.00	2.00
Upstream Filter(I)	1.00	0.00	0.00	1.00	0.00	0.00	0.93	0.00	0.93	0.83	0.00	0.83
Uniform Delay (d), s/veh	40.2	0.0	0.0	39.9	0.0	0.0	34.3	0.0	0.0	32.6	0.0	0.0
Incr Delay (d2), s/veh	2.2	0.0	0.0	1.8	0.0	0.0	0.7	0.0	1.2	0.1	0.0	0.7
Initial Q Delay(d3),s/veh	0.0	0.0	0.0	0.0	0.0	0.0	0.0	0.0	0.0	0.0	0.0	0.0
%ile BackOfQ(50%),veh/ln	2.2	0.0	0.0	1.9	0.0	0.0	0.6	0.0	0.3	0.2	0.0	0.2
LnGrp Delay(d),s/veh	42.4	0.0	0.0	41.8	0.0	0.0	35.0	0.0	1.2	32.7	0.0	0.7
LnGrp LOS	D			D			D		A	C		A
Approach Vol, veh/h		86			75			473			360	
Approach Delay, s/veh		42.4			41.8			3.2			1.4	
Approach LOS		D			D			A			A	

Timer	1	2	3	4	5	6	7	8
Assigned Phs	1	2		4	5	6		8
Phs Duration (G+Y+Rc), s	13.0	65.0		12.0	12.0	66.0		12.0
Change Period (Y+Rc), s	4.0	5.0		4.6	4.0	5.0		4.6
Max Green Setting (Gmax), s	9.0	40.4		26.4	8.6	41.4		26.4
Max Q Clear Time (g_c+I1), s	2.4	2.0		7.0	3.4	2.0		6.3
Green Ext Time (p_c), s	0.0	3.1		0.4	0.0	2.4		0.3

Intersection Summary	
HCM 2010 Ctrl Delay	8.9
HCM 2010 LOS	A

This document was created by an application that isn't licensed to use novaPDF.
Purchase a license to generate PDF files without this notice.

Movement	EBL	EBT	EBR	WBL	WBT	WBR	NBL	NBT	NBR	SBL	SBT	SBR
Lane Configurations												
Traffic Volume (veh/h)	10	70	13	61	220	17	29	383	29	21	342	35
Future Volume (veh/h)	10	70	13	61	220	17	29	383	29	21	342	35
Number	7	4	14	3	8	18	5	2	12	1	6	16
Initial Q (Qb), veh	0	0	0	0	0	0	0	0	0	0	0	0
Ped-Bike Adj(A_pbT)	1.00		1.00	1.00		1.00	1.00		1.00	1.00		1.00
Parking Bus, Adj	1.00	1.00	1.00	1.00	1.00	1.00	1.00	1.00	1.00	1.00	1.00	1.00
Adj Sat Flow, veh/h/ln	1863	1863	1900	1863	1863	1900	1863	1863	1900	1863	1863	1900
Adj Flow Rate, veh/h	11	76	14	66	239	18	32	416	32	23	372	38
Adj No. of Lanes	1	2	0	1	2	0	1	1	0	1	1	0
Peak Hour Factor	0.92	0.92	0.92	0.92	0.92	0.92	0.92	0.92	0.92	0.92	0.92	0.92
Percent Heavy Veh, %	2	2	2	2	2	2	2	2	2	2	2	2
Cap, veh/h	128	335	60	194	373	28	158	1081	83	177	1071	109
Arrive On Green	0.11	0.11	0.11	0.11	0.11	0.11	0.18	1.00	1.00	0.20	1.00	1.00
Sat Flow, veh/h	1118	2999	539	1301	3339	250	1774	1708	131	1774	1663	170
Grp Volume(v), veh/h	11	44	46	66	126	131	32	0	448	23	0	410
Grp Sat Flow(s),veh/h/ln	1118	1770	1768	1301	1770	1819	1774	0	1840	1774	0	1833
Q Serve(g_s), s	0.9	2.0	2.1	4.4	6.1	6.2	1.4	0.0	0.0	1.0	0.0	0.0
Cycle Q Clear(g_c), s	7.1	2.0	2.1	6.5	6.1	6.2	1.4	0.0	0.0	1.0	0.0	0.0
Prop In Lane	1.00		0.30	1.00		0.14	1.00		0.07	1.00		0.09
Lane Grp Cap(c), veh/h	128	198	197	194	198	203	158	0	1164	177	0	1180
V/C Ratio(X)	0.09	0.22	0.23	0.34	0.64	0.65	0.20	0.00	0.38	0.13	0.00	0.35
Avail Cap(c_a), veh/h	338	531	530	440	531	546	177	0	1164	197	0	1180
HCM Platoon Ratio	1.00	1.00	1.00	1.00	1.00	1.00	2.00	2.00	2.00	2.00	2.00	2.00
Upstream Filter(I)	1.00	1.00	1.00	1.00	1.00	1.00	0.56	0.00	0.56	0.95	0.00	0.95
Uniform Delay (d), s/veh	41.7	36.4	36.5	39.4	38.2	38.3	34.3	0.0	0.0	32.8	0.0	0.0
Incr Delay (d2), s/veh	0.3	0.6	0.6	1.0	3.4	3.4	0.3	0.0	0.5	0.3	0.0	0.8
Initial Q Delay(d3),s/veh	0.0	0.0	0.0	0.0	0.0	0.0	0.0	0.0	0.0	0.0	0.0	0.0
%ile BackOfQ(50%),veh/ln	0.3	1.0	1.1	1.6	3.2	3.3	0.7	0.0	0.2	0.5	0.0	0.3
LnGrp Delay(d),s/veh	41.9	37.0	37.1	40.5	41.6	41.7	34.6	0.0	0.5	33.1	0.0	0.8
LnGrp LOS	D	D	D	D	D	D	C		A	C		A
Approach Vol, veh/h		101			323			480			433	
Approach Delay, s/veh		37.6			41.4			2.8			2.5	
Approach LOS		D			D			A			A	

Timer	1	2	3	4	5	6	7	8
Assigned Phs	1	2		4	5	6		8
Phs Duration (G+Y+Rc), s	13.0	62.0		15.0	12.0	63.0		15.0
Change Period (Y+Rc), s	4.0	5.0		5.0	4.0	5.0		5.0
Max Green Setting (Gmax), s	10.0	39.0		27.0	9.0	40.0		27.0
Max Q Clear Time (g_c+I1), s	3.1	2.0		9.1	3.4	2.0		8.5
Green Ext Time (p_c), s	0.0	3.2		0.4	0.0	2.9		1.5

Intersection Summary	
HCM 2010 Ctrl Delay	14.7
HCM 2010 LOS	B

This document was created by an application that isn't licensed to use novaPDF.
Purchase a license to generate PDF files without this notice.

Movement	EBL	EBT	EBR	WBL	WBT	WBR	NBL	NBT	NBR	SBL	SBT	SBR
Lane Configurations												
Traffic Volume (veh/h)	31	1005	53	44	1264	45	100	371	66	58	233	77
Future Volume (veh/h)	31	1005	53	44	1264	45	100	371	66	58	233	77
Number	7	4	14	3	8	18	5	2	12	1	6	16
Initial Q (Qb), veh	0	0	0	0	0	0	0	0	0	0	0	0
Ped-Bike Adj(A_pbT)	1.00		1.00	1.00		1.00	1.00		1.00	1.00		1.00
Parking Bus, Adj	1.00	1.00	1.00	1.00	1.00	1.00	1.00	1.00	1.00	1.00	1.00	1.00
Adj Sat Flow, veh/h/ln	1863	1863	1900	1863	1863	1900	1863	1863	1900	1863	1863	1900
Adj Flow Rate, veh/h	34	1092	58	48	1374	49	109	403	72	63	253	84
Adj No. of Lanes	1	2	0	1	2	0	1	1	0	1	1	0
Peak Hour Factor	0.92	0.92	0.92	0.92	0.92	0.92	0.92	0.92	0.92	0.92	0.92	0.92
Percent Heavy Veh, %	2	2	2	2	2	2	2	2	2	2	2	2
Cap, veh/h	90	1406	75	204	1433	51	166	528	94	141	440	146
Arrive On Green	0.82	0.82	0.82	0.41	0.41	0.41	0.09	0.34	0.34	0.16	0.66	0.66
Sat Flow, veh/h	375	3419	182	487	3486	124	1774	1539	275	1774	1340	445
Grp Volume(v), veh/h	34	565	585	48	697	726	109	0	475	63	0	337
Grp Sat Flow(s),veh/h/ln	375	1770	1831	487	1770	1841	1774	0	1814	1774	0	1784
Q Serve(g_s), s	2.5	14.1	14.2	7.3	34.4	34.5	5.3	0.0	21.0	2.9	0.0	9.4
Cycle Q Clear(g_c), s	37.0	14.1	14.2	21.5	34.4	34.5	5.3	0.0	21.0	2.9	0.0	9.4
Prop In Lane	1.00		0.10	1.00		0.07	1.00		0.15	1.00		0.25
Lane Grp Cap(c), veh/h	90	728	753	204	728	757	166	0	622	141	0	587
V/C Ratio(X)	0.38	0.78	0.78	0.24	0.96	0.96	0.66	0.00	0.76	0.45	0.00	0.57
Avail Cap(c_a), veh/h	90	728	753	204	728	757	203	0	622	197	0	587
HCM Platoon Ratio	2.00	2.00	2.00	1.00	1.00	1.00	1.00	1.00	1.00	2.00	2.00	2.00
Upstream Filter(I)	0.81	0.81	0.81	1.00	1.00	1.00	1.00	0.00	1.00	0.94	0.00	0.94
Uniform Delay (d), s/veh	26.1	6.0	6.0	27.8	25.7	25.8	39.4	0.0	26.3	36.1	0.0	11.9
Incr Delay (d2), s/veh	3.0	4.6	4.5	0.8	23.5	23.4	5.5	0.0	8.6	2.1	0.0	3.8
Initial Q Delay(d3),s/veh	0.0	0.0	0.0	0.0	0.0	0.0	0.0	0.0	0.0	0.0	0.0	0.0
%ile BackOfQ(50%),veh/ln	0.9	7.2	7.4	1.0	21.4	22.3	2.9	0.0	11.9	1.5	0.0	5.1
LnGrp Delay(d),s/veh	29.1	10.6	10.5	28.6	49.3	49.2	44.9	0.0	35.0	38.2	0.0	15.8
LnGrp LOS	C	B	B	C	D	D	D		C	D		B
Approach Vol, veh/h		1184			1471			584			400	
Approach Delay, s/veh		11.1			48.5			36.8			19.3	
Approach LOS		B			D			D			B	

Timer	1	2	3	4	5	6	7	8
Assigned Phs	1	2		4	5	6		8
Phs Duration (G+Y+Rc), s	11.1	36.9		42.0	12.4	35.6		42.0
Change Period (Y+Rc), s	4.0	6.0		5.0	4.0	6.0		5.0
Max Green Setting (Gmax), s	10.0	28.0		37.0	10.3	27.7		37.0
Max Q Clear Time (g_c+I1), s	4.9	23.0		39.0	7.3	11.4		36.5
Green Ext Time (p_c), s	0.0	1.7		0.0	0.1	2.5		0.4

Intersection Summary	
HCM 2010 Ctrl Delay	31.3
HCM 2010 LOS	C

This document was created by an application that isn't licensed to use novaPDF.
Purchase a license to generate PDF files without this notice.

Movement	EBL	EBT	EBR	WBL	WBT	WBR	NBL	NBT	NBR	SBL	SBT	SBR
Lane Configurations												
Traffic Volume (veh/h)	18	521	41	13	628	27	49	91	21	14	37	30
Future Volume (veh/h)	18	521	41	13	628	27	49	91	21	14	37	30
Number	7	4	14	3	8	18	5	2	12	1	6	16
Initial Q (Qb), veh	0	0	0	0	0	0	0	0	0	0	0	0
Ped-Bike Adj(A_pbT)	1.00		1.00	1.00		1.00	1.00		1.00	1.00		1.00
Parking Bus, Adj	1.00	1.00	1.00	1.00	1.00	1.00	1.00	1.00	1.00	1.00	1.00	1.00
Adj Sat Flow, veh/h/ln	1900	1863	1900	1900	1863	1900	1900	1863	1900	1900	1863	1900
Adj Flow Rate, veh/h	20	566	45	14	683	29	53	99	23	15	40	33
Adj No. of Lanes	0	2	0	0	2	0	0	2	0	0	2	0
Peak Hour Factor	0.92	0.92	0.92	0.92	0.92	0.92	0.92	0.92	0.92	0.92	0.92	0.92
Percent Heavy Veh, %	2	2	2	2	2	2	2	2	2	2	2	2
Cap, veh/h	93	1329	104	84	1404	59	413	726	173	248	591	455
Arrive On Green	0.42	0.42	0.42	0.42	0.42	0.42	0.38	0.38	0.38	0.38	0.38	0.38
Sat Flow, veh/h	40	3165	247	22	3342	140	789	1911	455	402	1556	1197
Grp Volume(v), veh/h	330	0	301	381	0	345	93	0	82	47	0	41
Grp Sat Flow(s),veh/h/ln	1801	0	1651	1834	0	1670	1540	0	1615	1672	0	1484
Q Serve(g_s), s	0.0	0.0	6.5	0.0	0.0	7.6	0.1	0.0	1.6	0.0	0.0	0.9
Cycle Q Clear(g_c), s	6.2	0.0	6.5	7.4	0.0	7.6	1.7	0.0	1.6	0.8	0.0	0.9
Prop In Lane	0.06		0.15	0.04		0.08	0.57		0.28	0.32		0.81
Lane Grp Cap(c), veh/h	833	0	694	845	0	702	698	0	614	730	0	564
V/C Ratio(X)	0.40	0.00	0.43	0.45	0.00	0.49	0.13	0.00	0.13	0.06	0.00	0.07
Avail Cap(c_a), veh/h	833	0	694	845	0	702	698	0	614	730	0	564
HCM Platoon Ratio	1.00	1.00	1.00	1.00	1.00	1.00	1.00	1.00	1.00	1.00	1.00	1.00
Upstream Filter(I)	1.00	0.00	1.00	0.52	0.00	0.52	1.00	0.00	1.00	1.00	0.00	1.00
Uniform Delay (d), s/veh	10.2	0.0	10.3	10.6	0.0	10.6	10.1	0.0	10.1	9.9	0.0	9.9
Incr Delay (d2), s/veh	0.3	0.0	0.4	0.2	0.0	0.3	0.4	0.0	0.4	0.2	0.0	0.2
Initial Q Delay(d3),s/veh	0.0	0.0	0.0	0.0	0.0	0.0	0.0	0.0	0.0	0.0	0.0	0.0
%ile BackOfQ(50%),veh/ln	3.3	0.0	3.0	3.9	0.0	3.5	0.9	0.0	0.8	0.4	0.0	0.4
LnGrp Delay(d),s/veh	10.5	0.0	10.7	10.8	0.0	10.9	10.5	0.0	10.6	10.0	0.0	10.1
LnGrp LOS	B		B	B		B	B		B	B		B
Approach Vol, veh/h		631			726			175			88	
Approach Delay, s/veh		10.6			10.8			10.5			10.1	
Approach LOS		B			B			B			B	

Timer	1	2	3	4	5	6	7	8
Assigned Phs		2		4		6		8
Phs Duration (G+Y+Rc), s		24.0		26.0		24.0		26.0
Change Period (Y+Rc), s		5.0		5.0		5.0		5.0
Max Green Setting (Gmax), s		19.0		21.0		19.0		21.0
Max Q Clear Time (g_c+I1), s		3.7		8.5		2.9		9.6
Green Ext Time (p_c), s		0.8		3.2		0.3		3.5

Intersection Summary	
HCM 2010 Ctrl Delay	10.7
HCM 2010 LOS	B

This document was created by an application that isn't licensed to use novaPDF.
Purchase a license to generate PDF files without this notice.

Intersection	
Int Delay, s/veh	4.6

Movement	EBL	EBT	EBR	WBL	WBT	WBR	NBL	NBT	NBR	SBL	SBT	SBR
Lane Configurations												
Traffic Vol, veh/h	6	18	11	23	37	38	19	122	9	17	50	17
Future Vol, veh/h	6	18	11	23	37	38	19	122	9	17	50	17
Conflicting Peds, #/hr	0	0	0	0	0	0	0	0	0	0	0	0
Sign Control	Stop	Stop	Stop	Stop	Stop	Stop	Free	Free	Free	Free	Free	Free
RT Channelized	-	-	None	-	-	None	-	-	None	-	-	None
Storage Length	-	-	-	-	-	-	-	-	0	-	-	0
Veh in Median Storage, #	-	0	-	-	0	-	-	0	-	-	0	-
Grade, %	-	0	-	-	0	-	-	0	-	-	0	-
Peak Hour Factor	92	92	92	92	92	92	92	92	92	92	92	92
Heavy Vehicles, %	2	2	2	2	2	2	2	2	2	2	2	2
Mvmt Flow	7	20	12	25	40	41	21	133	10	18	54	18

Major/Minor	Minor2			Minor1			Major1			Major2		
Conflicting Flow All	311	275	54	290	283	133	72	0	0	143	0	0
Stage 1	90	90	-	175	175	-	-	-	-	-	-	-
Stage 2	221	185	-	115	108	-	-	-	-	-	-	-
Critical Hdwy	7.12	6.52	6.22	7.12	6.52	6.22	4.12	-	-	4.12	-	-
Critical Hdwy Stg 1	6.12	5.52	-	6.12	5.52	-	-	-	-	-	-	-
Critical Hdwy Stg 2	6.12	5.52	-	6.12	5.52	-	-	-	-	-	-	-
Follow-up Hdwy	3.518	4.018	3.318	3.518	4.018	3.318	2.218	-	-	2.218	-	-
Pot Cap-1 Maneuver	642	632	1013	662	626	916	1528	-	-	1440	-	-
Stage 1	917	820	-	827	754	-	-	-	-	-	-	-
Stage 2	781	747	-	890	806	-	-	-	-	-	-	-
Platoon blocked, %								-	-		-	-
Mov Cap-1 Maneuver	570	614	1013	625	608	916	1528	-	-	1440	-	-
Mov Cap-2 Maneuver	570	614	-	625	608	-	-	-	-	-	-	-
Stage 1	903	809	-	815	743	-	-	-	-	-	-	-
Stage 2	695	736	-	847	796	-	-	-	-	-	-	-

Approach	EB	WB	NB	SB
HCM Control Delay, s	10.5	11	0.9	1.5
HCM LOS	B	B		

Minor Lane/Major Mvmt	NBL	NBT	NBR	EBLn1	WBLn1	SBL	SBT	SBR
Capacity (veh/h)	1528	-	-	690	704	1440	-	-
HCM Lane V/C Ratio	0.014	-	-	0.055	0.151	0.013	-	-
HCM Control Delay (s)	7.4	0	-	10.5	11	7.5	0	-
HCM Lane LOS	A	A	-	B	B	A	A	-
HCM 95th %tile Q(veh)	0	-	-	0.2	0.5	0	-	-

This document was created by an application that isn't licensed to use novaPDF.
Purchase a license to generate PDF files without this notice.

Movement	EBL	EBT	EBR	WBL	WBT	WBR	NBL	NBT	NBR	SBL	SBT	SBR
Lane Configurations												
Traffic Volume (veh/h)	19	66	19	18	244	21	44	85	21	9	79	44
Future Volume (veh/h)	19	66	19	18	244	21	44	85	21	9	79	44
Number	7	4	14	3	8	18	5	2	12	1	6	16
Initial Q (Qb), veh	0	0	0	0	0	0	0	0	0	0	0	0
Ped-Bike Adj(A_pbT)	1.00		1.00	1.00		1.00	1.00		1.00	1.00		1.00
Parking Bus, Adj	1.00	1.00	1.00	1.00	1.00	1.00	1.00	1.00	1.00	1.00	1.00	1.00
Adj Sat Flow, veh/h/ln	1863	1863	1863	1863	1863	1863	1900	1863	1900	1900	1863	1900
Adj Flow Rate, veh/h	21	72	21	20	265	23	48	92	23	10	86	48
Adj No. of Lanes	1	1	1	1	1	1	0	2	0	0	2	0
Peak Hour Factor	0.92	0.92	0.92	0.92	0.92	0.92	0.92	0.92	0.92	0.92	0.92	0.92
Percent Heavy Veh, %	2	2	2	2	2	2	2	2	2	2	2	2
Cap, veh/h	521	820	697	686	820	697	394	715	184	123	809	409
Arrive On Green	0.44	0.44	0.44	0.44	0.44	0.44	0.38	0.38	0.38	0.38	0.38	0.38
Sat Flow, veh/h	1087	1863	1583	1298	1863	1583	743	1881	485	110	2130	1076
Grp Volume(v), veh/h	21	72	21	20	265	23	87	0	76	77	0	67
Grp Sat Flow(s),veh/h/ln	1087	1863	1583	1298	1863	1583	1499	0	1609	1811	0	1505
Q Serve(g_s), s	0.6	1.1	0.4	0.5	4.6	0.4	0.0	0.0	1.5	0.0	0.0	1.4
Cycle Q Clear(g_c), s	5.3	1.1	0.4	1.6	4.6	0.4	1.5	0.0	1.5	1.3	0.0	1.4
Prop In Lane	1.00		1.00	1.00		1.00	0.55		0.30	0.13		0.71
Lane Grp Cap(c), veh/h	521	820	697	686	820	697	682	0	612	770	0	572
V/C Ratio(X)	0.04	0.09	0.03	0.03	0.32	0.03	0.13	0.00	0.12	0.10	0.00	0.12
Avail Cap(c_a), veh/h	521	820	697	686	820	697	682	0	612	770	0	572
HCM Platoon Ratio	1.00	1.00	1.00	1.00	1.00	1.00	1.00	1.00	1.00	1.00	1.00	1.00
Upstream Filter(I)	1.00	1.00	1.00	0.85	0.85	0.85	0.84	0.00	0.84	1.00	0.00	1.00
Uniform Delay (d), s/veh	10.9	8.2	7.9	8.6	9.1	8.0	10.1	0.0	10.1	10.0	0.0	10.1
Incr Delay (d2), s/veh	0.0	0.0	0.0	0.0	0.1	0.0	0.3	0.0	0.4	0.3	0.0	0.4
Initial Q Delay(d3),s/veh	0.0	0.0	0.0	0.0	0.0	0.0	0.0	0.0	0.0	0.0	0.0	0.0
%ile BackOfQ(50%),veh/ln	0.2	0.6	0.2	0.2	2.4	0.2	0.8	0.0	0.7	0.7	0.0	0.7
LnGrp Delay(d),s/veh	10.9	8.2	8.0	8.6	9.2	8.0	10.4	0.0	10.4	10.3	0.0	10.5
LnGrp LOS	B	A	A	A	A	A	B		B	B		B
Approach Vol, veh/h		114			308			163			144	
Approach Delay, s/veh		8.6			9.1			10.4			10.4	
Approach LOS		A			A			B			B	

Timer	1	2	3	4	5	6	7	8
Assigned Phs		2		4		6		8
Phs Duration (G+Y+Rc), s		23.5		26.5		23.5		26.5
Change Period (Y+Rc), s		4.5		4.5		4.5		4.5
Max Green Setting (Gmax), s		19.0		22.0		19.0		22.0
Max Q Clear Time (g_c+I1), s		3.5		7.3		3.4		6.6
Green Ext Time (p_c), s		0.5		0.2		0.4		0.9

Intersection Summary	
HCM 2010 Ctrl Delay	9.6
HCM 2010 LOS	A

This document was created by an application that isn't licensed to use novaPDF.
Purchase a license to generate PDF files without this notice.

Movement	EBL	EBT	EBR	WBL	WBT	WBR	NBL	NBT	NBR	SBL	SBT	SBR
Lane Configurations												
Traffic Volume (veh/h)	85	992	50	14	1377	23	34	44	19	27	52	107
Future Volume (veh/h)	85	992	50	14	1377	23	34	44	19	27	52	107
Number	7	4	14	3	8	18	5	2	12	1	6	16
Initial Q (Qb), veh	0	0	0	0	0	0	0	0	0	0	0	0
Ped-Bike Adj(A_pbT)	1.00		1.00	1.00		1.00	1.00		1.00	1.00		1.00
Parking Bus, Adj	1.00	1.00	1.00	1.00	1.00	1.00	1.00	1.00	1.00	1.00	1.00	1.00
Adj Sat Flow, veh/h/ln	1863	1863	1900	1863	1863	1900	1900	1863	1900	1900	1863	1900
Adj Flow Rate, veh/h	92	1078	54	15	1497	25	37	48	21	29	57	116
Adj No. of Lanes	1	2	0	1	2	0	0	2	0	0	2	0
Peak Hour Factor	0.92	0.92	0.92	0.92	0.92	0.92	0.92	0.92	0.92	0.92	0.92	0.92
Percent Heavy Veh, %	2	2	2	2	2	2	2	2	2	2	2	2
Cap, veh/h	188	2070	104	289	2150	36	280	381	178	187	344	411
Arrive On Green	0.60	0.60	0.60	0.60	0.60	0.60	0.29	0.29	0.29	0.29	0.29	0.29
Sat Flow, veh/h	341	3430	172	495	3562	59	741	1335	623	469	1205	1441
Grp Volume(v), veh/h	92	556	576	15	743	779	53	0	53	86	0	116
Grp Sat Flow(s),veh/h/ln	341	1770	1832	495	1770	1852	1113	0	1585	1673	0	1441
Q Serve(g_s), s	22.7	16.4	16.4	1.6	25.8	25.9	1.6	0.0	2.2	0.0	0.0	5.6
Cycle Q Clear(g_c), s	48.7	16.4	16.4	18.0	25.8	25.9	7.3	0.0	2.2	3.1	0.0	5.6
Prop In Lane	1.00		0.09	1.00		0.03	0.70		0.39	0.34		1.00
Lane Grp Cap(c), veh/h	188	1068	1106	289	1068	1118	386	0	453	531	0	411
V/C Ratio(X)	0.49	0.52	0.52	0.05	0.70	0.70	0.14	0.00	0.12	0.16	0.00	0.28
Avail Cap(c_a), veh/h	194	1101	1140	298	1101	1153	386	0	453	531	0	411
HCM Platoon Ratio	1.00	1.00	1.00	1.00	1.00	1.00	1.00	1.00	1.00	1.00	1.00	1.00
Upstream Filter(I)	1.00	1.00	1.00	0.29	0.29	0.29	1.00	0.00	1.00	1.00	0.00	1.00
Uniform Delay (d), s/veh	28.9	10.3	10.3	15.5	12.2	12.2	25.8	0.0	23.8	24.1	0.0	25.0
Incr Delay (d2), s/veh	2.0	0.4	0.4	0.0	0.6	0.5	0.7	0.0	0.5	0.7	0.0	1.7
Initial Q Delay(d3),s/veh	0.0	0.0	0.0	0.0	0.0	0.0	0.0	0.0	0.0	0.0	0.0	0.0
%ile BackOfQ(50%),veh/ln	2.2	8.0	8.3	0.2	12.5	13.1	1.1	0.0	1.0	1.7	0.0	2.4
LnGrp Delay(d),s/veh	30.8	10.7	10.7	15.5	12.8	12.7	26.5	0.0	24.3	24.7	0.0	26.7
LnGrp LOS	C	B	B	B	B	B	C		C	C		C
Approach Vol, veh/h		1224			1537			106			202	
Approach Delay, s/veh		12.2			12.8			25.4			25.9	
Approach LOS		B			B			C			C	

Timer	1	2	3	4	5	6	7	8
Assigned Phs		2		4		6		8
Phs Duration (G+Y+Rc), s		30.7		59.3		30.7		59.3
Change Period (Y+Rc), s		5.0		5.0		5.0		5.0
Max Green Setting (Gmax), s		24.0		56.0		24.0		56.0
Max Q Clear Time (g_c+I1), s		9.3		50.7		7.6		27.9
Green Ext Time (p_c), s		0.4		3.6		1.0		13.9

Intersection Summary	
HCM 2010 Ctrl Delay	13.9
HCM 2010 LOS	B

This document was created by an application that isn't licensed to use novaPDF.
Purchase a license to generate PDF files without this notice.

Movement	EBL	EBT	EBR	WBL	WBT	WBR	NBL	NBT	NBR	SBL	SBT	SBR
Lane Configurations												
Traffic Volume (veh/h)	11	332	24	36	306	51	11	96	15	40	152	18
Future Volume (veh/h)	11	332	24	36	306	51	11	96	15	40	152	18
Number	7	4	14	3	8	18	5	2	12	1	6	16
Initial Q (Qb), veh	0	0	0	0	0	0	0	0	0	0	0	0
Ped-Bike Adj(A_pbT)	1.00		1.00	1.00		1.00	1.00		1.00	1.00		1.00
Parking Bus, Adj	1.00	1.00	1.00	1.00	1.00	1.00	1.00	1.00	1.00	1.00	1.00	1.00
Adj Sat Flow, veh/h/ln	1569	1569	1600	1569	1569	1600	1569	1569	1600	1569	1569	1600
Adj Flow Rate, veh/h	12	361	26	39	333	55	12	104	16	43	165	20
Adj No. of Lanes	1	2	0	1	2	0	1	1	0	1	1	0
Peak Hour Factor	0.92	0.92	0.92	0.92	0.92	0.92	0.92	0.92	0.92	0.92	0.92	0.92
Percent Heavy Veh, %	2	2	2	2	2	2	2	2	2	2	2	2
Cap, veh/h	359	815	58	367	770	126	133	427	66	149	456	55
Arrive On Green	0.08	0.29	0.29	0.09	0.30	0.30	0.18	0.64	0.64	0.10	0.33	0.33
Sat Flow, veh/h	1494	2821	202	1494	2565	419	1494	1328	204	1494	1373	166
Grp Volume(v), veh/h	12	190	197	39	192	196	12	0	120	43	0	185
Grp Sat Flow(s),veh/h/ln	1494	1490	1533	1494	1490	1495	1494	0	1533	1494	0	1539
Q Serve(g_s), s	0.5	9.4	9.4	1.5	9.3	9.5	0.6	0.0	3.0	2.4	0.0	8.2
Cycle Q Clear(g_c), s	0.5	9.4	9.4	1.5	9.3	9.5	0.6	0.0	3.0	2.4	0.0	8.2
Prop In Lane	1.00		0.13	1.00		0.28	1.00		0.13	1.00		0.11
Lane Grp Cap(c), veh/h	359	431	443	367	447	448	133	0	492	149	0	511
V/C Ratio(X)	0.03	0.44	0.44	0.11	0.43	0.44	0.09	0.00	0.24	0.29	0.00	0.36
Avail Cap(c_a), veh/h	359	431	443	367	447	448	133	0	492	149	0	511
HCM Platoon Ratio	1.00	1.00	1.00	1.00	1.00	1.00	2.00	2.00	2.00	1.00	1.00	1.00
Upstream Filter(I)	0.95	0.95	0.95	1.00	1.00	1.00	0.99	0.00	0.99	1.00	0.00	1.00
Uniform Delay (d), s/veh	18.6	26.1	26.1	18.4	25.3	25.4	34.0	0.0	11.5	37.5	0.0	22.8
Incr Delay (d2), s/veh	0.2	3.1	3.1	0.6	3.0	3.1	1.3	0.0	1.2	4.8	0.0	2.0
Initial Q Delay(d3),s/veh	0.0	0.0	0.0	0.0	0.0	0.0	0.0	0.0	0.0	0.0	0.0	0.0
%ile BackOfQ(50%),veh/ln	0.2	4.2	4.4	0.7	4.2	4.3	0.3	0.0	1.4	1.2	0.0	3.8
LnGrp Delay(d),s/veh	18.8	29.2	29.2	19.0	28.3	28.5	35.3	0.0	12.6	42.3	0.0	24.8
LnGrp LOS	B	C	C	B	C	C	D		B	D		C
Approach Vol, veh/h		399			427			132			228	
Approach Delay, s/veh		28.9			27.5			14.7			28.1	
Approach LOS		C			C			B			C	

Timer	1	2	3	4	5	6	7	8
Assigned Phs	1	2	3	4	5	6	7	8
Phs Duration (G+Y+Rc), s	13.0	34.0	12.0	31.0	12.0	35.0	11.0	32.0
Change Period (Y+Rc), s	4.0	5.1	4.0	5.0	4.0	5.1	4.0	5.0
Max Green Setting (Gmax), s	9.0	28.9	8.0	26.0	8.0	29.9	7.0	27.0
Max Q Clear Time (g_c+I1), s	4.4	5.0	3.5	11.4	2.6	10.2	2.5	11.5
Green Ext Time (p_c), s	0.0	0.6	0.0	1.9	0.0	0.9	0.0	2.0

Intersection Summary	
HCM 2010 Ctrl Delay	26.7
HCM 2010 LOS	C

Movement	EBL	EBT	EBR	WBL	WBT	WBR	NBL	NBT	NBR	SBL	SBT	SBR
Lane Configurations												
Traffic Volume (veh/h)	2	15	4	2	21	4	13	136	19	3	183	12
Future Volume (veh/h)	2	15	4	2	21	4	13	136	19	3	183	12
Number	7	4	14	3	8	18	5	2	12	1	6	16
Initial Q (Qb), veh	0	0	0	0	0	0	0	0	0	0	0	0
Ped-Bike Adj(A_pbT)	1.00		1.00	1.00		1.00	1.00		1.00	1.00		1.00
Parking Bus, Adj	1.00	1.00	1.00	1.00	1.00	1.00	1.00	1.00	1.00	1.00	1.00	1.00
Adj Sat Flow, veh/h/ln	1600	1569	1600	1600	1569	1600	1569	1569	1600	1569	1569	1600
Adj Flow Rate, veh/h	2	16	4	2	23	4	14	148	21	3	199	13
Adj No. of Lanes	0	1	0	0	1	0	1	1	0	1	1	0
Peak Hour Factor	0.92	0.92	0.92	0.92	0.92	0.92	0.92	0.92	0.92	0.92	0.92	0.92
Percent Heavy Veh, %	2	2	2	2	2	2	2	2	2	2	2	2
Cap, veh/h	48	91	21	46	98	16	133	902	128	149	994	65
Arrive On Green	0.08	0.08	0.08	0.08	0.08	0.08	0.18	1.00	1.00	0.20	1.00	1.00
Sat Flow, veh/h	55	1174	273	42	1266	209	1494	1344	191	1494	1457	95
Grp Volume(v), veh/h	22	0	0	29	0	0	14	0	169	3	0	212
Grp Sat Flow(s),veh/h/ln	1501	0	0	1517	0	0	1494	0	1535	1494	0	1552
Q Serve(g_s), s	0.0	0.0	0.0	0.0	0.0	0.0	0.7	0.0	0.0	0.1	0.0	0.0
Cycle Q Clear(g_c), s	1.2	0.0	0.0	1.6	0.0	0.0	0.7	0.0	0.0	0.1	0.0	0.0
Prop In Lane	0.09		0.18	0.07		0.14	1.00		0.12	1.00		0.06
Lane Grp Cap(c), veh/h	160	0	0	161	0	0	133	0	1030	149	0	1059
V/C Ratio(X)	0.14	0.00	0.00	0.18	0.00	0.00	0.11	0.00	0.16	0.02	0.00	0.20
Avail Cap(c_a), veh/h	495	0	0	500	0	0	183	0	1030	199	0	1059
HCM Platoon Ratio	1.00	1.00	1.00	1.00	1.00	1.00	2.00	2.00	2.00	2.00	2.00	2.00
Upstream Filter(I)	1.00	0.00	0.00	1.00	0.00	0.00	0.99	0.00	0.99	0.96	0.00	0.96
Uniform Delay (d), s/veh	38.8	0.0	0.0	39.0	0.0	0.0	34.0	0.0	0.0	32.5	0.0	0.0
Incr Delay (d2), s/veh	0.4	0.0	0.0	0.5	0.0	0.0	0.3	0.0	0.3	0.1	0.0	0.4
Initial Q Delay(d3),s/veh	0.0	0.0	0.0	0.0	0.0	0.0	0.0	0.0	0.0	0.0	0.0	0.0
%ile BackOfQ(50%),veh/ln	0.5	0.0	0.0	0.7	0.0	0.0	0.3	0.0	0.1	0.1	0.0	0.1
LnGrp Delay(d),s/veh	39.2	0.0	0.0	39.5	0.0	0.0	34.3	0.0	0.3	32.5	0.0	0.4
LnGrp LOS	D			D			C		A	C		A
Approach Vol, veh/h		22			29			183			215	
Approach Delay, s/veh		39.2			39.5			2.9			0.9	
Approach LOS		D			D			A			A	

Timer	1	2	3	4	5	6	7	8
Assigned Phs	1	2		4	5	6		8
Phs Duration (G+Y+Rc), s	13.0	65.4		11.6	12.0	66.4		11.6
Change Period (Y+Rc), s	4.0	5.0		4.6	4.0	5.0		4.6
Max Green Setting (Gmax), s	12.0	37.0		27.4	11.0	38.0		27.4
Max Q Clear Time (g_c+I1), s	2.1	2.0		3.2	2.7	2.0		3.6
Green Ext Time (p_c), s	0.0	1.0		0.1	0.0	1.3		0.1

Intersection Summary	
HCM 2010 Ctrl Delay	6.1
HCM 2010 LOS	A

Movement	EBL	EBT	EBR	WBL	WBT	WBR	NBL	NBT	NBR	SBL	SBT	SBR
Lane Configurations												
Traffic Volume (veh/h)	30	92	25	11	42	9	14	151	43	12	174	10
Future Volume (veh/h)	30	92	25	11	42	9	14	151	43	12	174	10
Number	7	4	14	3	8	18	5	2	12	1	6	16
Initial Q (Qb), veh	0	0	0	0	0	0	0	0	0	0	0	0
Ped-Bike Adj(A_pbT)	1.00		1.00	1.00		1.00	1.00		1.00	1.00		1.00
Parking Bus, Adj	1.00	1.00	1.00	1.00	1.00	1.00	1.00	1.00	1.00	1.00	1.00	1.00
Adj Sat Flow, veh/h/ln	1863	1863	1900	1863	1863	1900	1863	1863	1900	1863	1863	1900
Adj Flow Rate, veh/h	33	100	27	12	46	10	15	164	47	13	189	11
Adj No. of Lanes	1	2	0	1	2	0	1	1	0	1	1	0
Peak Hour Factor	0.92	0.92	0.92	0.92	0.92	0.92	0.92	0.92	0.92	0.92	0.92	0.92
Percent Heavy Veh, %	2	2	2	2	2	2	2	2	2	2	2	2
Cap, veh/h	164	216	56	133	226	48	158	929	266	177	1182	69
Arrive On Green	0.08	0.08	0.08	0.08	0.08	0.08	0.18	1.00	1.00	0.20	1.00	1.00
Sat Flow, veh/h	1342	2779	725	1258	2911	613	1774	1393	399	1774	1743	101
Grp Volume(v), veh/h	33	62	65	12	27	29	15	0	211	13	0	200
Grp Sat Flow(s),veh/h/ln	1342	1770	1735	1258	1770	1755	1774	0	1792	1774	0	1845
Q Serve(g_s), s	2.1	3.0	3.2	0.8	1.3	1.4	0.6	0.0	0.0	0.5	0.0	0.0
Cycle Q Clear(g_c), s	3.5	3.0	3.2	4.0	1.3	1.4	0.6	0.0	0.0	0.5	0.0	0.0
Prop In Lane	1.00		0.42	1.00		0.35	1.00		0.22	1.00		0.05
Lane Grp Cap(c), veh/h	164	138	135	133	138	136	158	0	1195	177	0	1250
V/C Ratio(X)	0.20	0.45	0.48	0.09	0.20	0.21	0.10	0.00	0.18	0.07	0.00	0.16
Avail Cap(c_a), veh/h	492	570	559	441	570	565	217	0	1195	237	0	1250
HCM Platoon Ratio	1.00	1.00	1.00	1.00	1.00	1.00	2.00	2.00	2.00	2.00	2.00	2.00
Upstream Filter(I)	1.00	1.00	1.00	1.00	1.00	1.00	0.98	0.00	0.98	0.99	0.00	0.99
Uniform Delay (d), s/veh	40.5	39.7	39.8	41.7	38.9	38.9	34.0	0.0	0.0	32.6	0.0	0.0
Incr Delay (d2), s/veh	0.6	2.3	2.6	0.3	0.7	0.8	0.3	0.0	0.3	0.2	0.0	0.3
Initial Q Delay(d3),s/veh	0.0	0.0	0.0	0.0	0.0	0.0	0.0	0.0	0.0	0.0	0.0	0.0
%ile BackOfQ(50%),veh/ln	0.8	1.6	1.6	0.3	0.7	0.7	0.3	0.0	0.1	0.3	0.0	0.1
LnGrp Delay(d),s/veh	41.1	42.0	42.4	42.0	39.6	39.7	34.2	0.0	0.3	32.8	0.0	0.3
LnGrp LOS	D	D	D	D	D	D	C		A	C		A
Approach Vol, veh/h		160			68			226			213	
Approach Delay, s/veh		42.0			40.0			2.6			2.3	
Approach LOS		D			D			A			A	

Timer	1	2	3	4	5	6	7	8
Assigned Phs	1	2		4	5	6		8
Phs Duration (G+Y+Rc), s	13.0	65.0		12.0	12.0	66.0		12.0
Change Period (Y+Rc), s	4.0	5.0		5.0	4.0	5.0		5.0
Max Green Setting (Gmax), s	12.0	35.0		29.0	11.0	36.0		29.0
Max Q Clear Time (g_c+I1), s	2.5	2.0		5.5	2.6	2.0		6.0
Green Ext Time (p_c), s	0.0	1.3		0.7	0.0	1.2		0.3

Intersection Summary	
HCM 2010 Ctrl Delay	15.7
HCM 2010 LOS	B

Movement	EBL	EBT	EBR	WBL	WBT	WBR	NBL	NBT	NBR	SBL	SBT	SBR
Lane Configurations												
Traffic Volume (veh/h)	99	1104	36	12	513	15	20	92	26	25	141	28
Future Volume (veh/h)	99	1104	36	12	513	15	20	92	26	25	141	28
Number	7	4	14	3	8	18	5	2	12	1	6	16
Initial Q (Qb), veh	0	0	0	0	0	0	0	0	0	0	0	0
Ped-Bike Adj(A_pbT)	1.00		1.00	1.00		1.00	1.00		1.00	1.00		1.00
Parking Bus, Adj	1.00	1.00	1.00	1.00	1.00	1.00	1.00	1.00	1.00	1.00	1.00	1.00
Adj Sat Flow, veh/h/ln	1863	1863	1900	1863	1863	1900	1863	1863	1900	1863	1863	1900
Adj Flow Rate, veh/h	108	1200	39	13	558	16	22	100	28	27	153	30
Adj No. of Lanes	1	2	0	1	2	0	1	1	0	1	1	0
Peak Hour Factor	0.92	0.92	0.92	0.92	0.92	0.92	0.92	0.92	0.92	0.92	0.92	0.92
Percent Heavy Veh, %	2	2	2	2	2	2	2	2	2	2	2	2
Cap, veh/h	297	1319	43	128	1325	38	75	571	160	87	627	123
Arrive On Green	0.75	0.75	0.75	0.38	0.38	0.38	0.04	0.41	0.41	0.10	0.83	0.83
Sat Flow, veh/h	835	3499	114	447	3514	101	1774	1401	392	1774	1514	297
Grp Volume(v), veh/h	108	607	632	13	281	293	22	0	128	27	0	183
Grp Sat Flow(s),veh/h/ln	835	1770	1843	447	1770	1845	1774	0	1794	1774	0	1810
Q Serve(g_s), s	7.6	24.2	24.2	2.4	10.6	10.6	1.1	0.0	4.1	1.3	0.0	2.0
Cycle Q Clear(g_c), s	18.2	24.2	24.2	26.6	10.6	10.6	1.1	0.0	4.1	1.3	0.0	2.0
Prop In Lane	1.00		0.06	1.00		0.05	1.00		0.22	1.00		0.16
Lane Grp Cap(c), veh/h	297	667	695	128	667	695	75	0	731	87	0	750
V/C Ratio(X)	0.36	0.91	0.91	0.10	0.42	0.42	0.29	0.00	0.18	0.31	0.00	0.24
Avail Cap(c_a), veh/h	325	728	758	144	728	758	189	0	731	197	0	750
HCM Platoon Ratio	2.00	2.00	2.00	1.00	1.00	1.00	1.00	1.00	1.00	2.00	2.00	2.00
Upstream Filter(I)	0.61	0.61	0.61	1.00	1.00	1.00	1.00	0.00	1.00	0.99	0.00	0.99
Uniform Delay (d), s/veh	12.6	9.9	9.9	36.9	20.8	20.8	41.8	0.0	17.0	39.2	0.0	4.7
Incr Delay (d2), s/veh	0.7	10.2	10.0	0.5	0.6	0.6	2.1	0.0	0.5	2.0	0.0	0.8
Initial Q Delay(d3),s/veh	0.0	0.0	0.0	0.0	0.0	0.0	0.0	0.0	0.0	0.0	0.0	0.0
%ile BackOfQ(50%),veh/ln	1.7	13.0	13.5	0.3	5.3	5.5	0.6	0.0	2.1	0.7	0.0	1.1
LnGrp Delay(d),s/veh	13.2	20.1	19.8	37.4	21.4	21.3	43.9	0.0	17.5	41.1	0.0	5.5
LnGrp LOS	B	C	B	D	C	C	D		B	D		A
Approach Vol, veh/h		1347			587			150			210	
Approach Delay, s/veh		19.4			21.7			21.4			10.1	
Approach LOS		B			C			C			B	

Timer	1	2	3	4	5	6	7	8
Assigned Phs	1	2		4	5	6		8
Phs Duration (G+Y+Rc), s	8.4	42.7		38.9	7.8	43.3		38.9
Change Period (Y+Rc), s	4.0	6.0		5.0	4.0	6.0		5.0
Max Green Setting (Gmax), s	10.0	28.0		37.0	9.6	28.4		37.0
Max Q Clear Time (g_c+I1), s	13.3	6.1		26.2	3.1	4.0		28.6
Green Ext Time (p_c), s	0.0	0.9		7.7	0.0	1.4		3.0

Intersection Summary	
HCM 2010 Ctrl Delay	19.3
HCM 2010 LOS	B

Movement	EBL	EBT	EBR	WBL	WBT	WBR	NBL	NBT	NBR	SBL	SBT	SBR
Lane Configurations												
Traffic Volume (veh/h)	7	349	68	24	289	16	8	25	10	10	73	12
Future Volume (veh/h)	7	349	68	24	289	16	8	25	10	10	73	12
Number	7	4	14	3	8	18	5	2	12	1	6	16
Initial Q (Qb), veh	0	0	0	0	0	0	0	0	0	0	0	0
Ped-Bike Adj(A_pbT)	1.00		1.00	1.00		1.00	1.00		1.00	1.00		1.00
Parking Bus, Adj	1.00	1.00	1.00	1.00	1.00	1.00	1.00	1.00	1.00	1.00	1.00	1.00
Adj Sat Flow, veh/h/ln	1900	1863	1900	1900	1863	1900	1900	1863	1900	1900	1863	1900
Adj Flow Rate, veh/h	8	379	74	26	314	17	9	27	11	11	79	13
Adj No. of Lanes	0	2	0	0	2	0	0	2	0	0	2	0
Peak Hour Factor	0.92	0.92	0.92	0.92	0.92	0.92	0.92	0.92	0.92	0.92	0.92	0.92
Percent Heavy Veh, %	2	2	2	2	2	2	2	2	2	2	2	2
Cap, veh/h	81	1211	231	134	1310	69	276	746	298	171	1043	165
Arrive On Green	0.42	0.42	0.42	0.42	0.42	0.42	0.38	0.38	0.38	0.38	0.38	0.38
Sat Flow, veh/h	15	2883	550	123	3119	165	470	1962	783	221	2745	434
Grp Volume(v), veh/h	246	0	215	185	0	172	25	0	22	55	0	48
Grp Sat Flow(s),veh/h/ln	1851	0	1598	1741	0	1666	1659	0	1557	1782	0	1618
Q Serve(g_s), s	0.0	0.0	4.5	0.0	0.0	3.3	0.0	0.0	0.4	0.0	0.0	1.0
Cycle Q Clear(g_c), s	4.4	0.0	4.5	3.2	0.0	3.3	0.4	0.0	0.4	0.9	0.0	1.0
Prop In Lane	0.03		0.34	0.14		0.10	0.36		0.50	0.20		0.27
Lane Grp Cap(c), veh/h	852	0	671	813	0	700	728	0	592	764	0	615
V/C Ratio(X)	0.29	0.00	0.32	0.23	0.00	0.25	0.03	0.00	0.04	0.07	0.00	0.08
Avail Cap(c_a), veh/h	852	0	671	813	0	700	728	0	592	764	0	615
HCM Platoon Ratio	1.00	1.00	1.00	1.00	1.00	1.00	1.00	1.00	1.00	1.00	1.00	1.00
Upstream Filter(I)	1.00	0.00	1.00	0.91	0.00	0.91	1.00	0.00	1.00	1.00	0.00	1.00
Uniform Delay (d), s/veh	9.7	0.0	9.7	9.3	0.0	9.4	9.7	0.0	9.7	9.9	0.0	9.9
Incr Delay (d2), s/veh	0.2	0.0	0.3	0.1	0.0	0.2	0.1	0.0	0.1	0.2	0.0	0.3
Initial Q Delay(d3),s/veh	0.0	0.0	0.0	0.0	0.0	0.0	0.0	0.0	0.0	0.0	0.0	0.0
%ile BackOfQ(50%),veh/ln	2.3	0.0	2.0	1.7	0.0	1.6	0.2	0.0	0.2	0.5	0.0	0.5
LnGrp Delay(d),s/veh	9.9	0.0	10.0	9.5	0.0	9.5	9.8	0.0	9.9	10.1	0.0	10.2
LnGrp LOS	A		A	A		A	A		A	B		B
Approach Vol, veh/h		461			357			47			103	
Approach Delay, s/veh		9.9			9.5			9.8			10.1	
Approach LOS		A			A			A			B	

Timer	1	2	3	4	5	6	7	8
Assigned Phs		2		4		6		8
Phs Duration (G+Y+Rc), s		24.0		26.0		24.0		26.0
Change Period (Y+Rc), s		5.0		5.0		5.0		5.0
Max Green Setting (Gmax), s		19.0		21.0		19.0		21.0
Max Q Clear Time (g_c+I1), s		2.4		6.5		3.0		5.3
Green Ext Time (p_c), s		0.1		2.4		0.4		1.9

Intersection Summary	
HCM 2010 Ctrl Delay	9.8
HCM 2010 LOS	A

Intersection	
Int Delay, s/veh	3

Movement	EBL	EBT	EBR	WBL	WBT	WBR	NBL	NBT	NBR	SBL	SBT	SBR
Lane Configurations												
Traffic Vol, veh/h	3	9	23	29	9	5	10	53	9	4	150	2
Future Vol, veh/h	3	9	23	29	9	5	10	53	9	4	150	2
Conflicting Peds, #/hr	0	0	0	0	0	0	0	0	0	0	0	0
Sign Control	Stop	Stop	Stop	Stop	Stop	Stop	Free	Free	Free	Free	Free	Free
RT Channelized	-	-	None	-	-	None	-	-	None	-	-	None
Storage Length	-	-	-	-	-	-	-	-	0	-	-	0
Veh in Median Storage, #	-	0	-	-	0	-	-	0	-	-	0	-
Grade, %	-	0	-	-	0	-	-	0	-	-	0	-
Peak Hour Factor	92	92	92	92	92	92	92	92	92	92	92	92
Heavy Vehicles, %	2	2	2	2	2	2	2	2	2	2	2	2
Mvmt Flow	3	10	25	32	10	5	11	58	10	4	163	2

Major/Minor	Minor2			Minor1			Major1			Major2		
Conflicting Flow All	264	261	163	270	253	58	165	0	0	68	0	0
Stage 1	171	171	-	80	80	-	-	-	-	-	-	-
Stage 2	93	90	-	190	173	-	-	-	-	-	-	-
Critical Hdwy	7.12	6.52	6.22	7.12	6.52	6.22	4.12	-	-	4.12	-	-
Critical Hdwy Stg 1	6.12	5.52	-	6.12	5.52	-	-	-	-	-	-	-
Critical Hdwy Stg 2	6.12	5.52	-	6.12	5.52	-	-	-	-	-	-	-
Follow-up Hdwy	3.518	4.018	3.318	3.518	4.018	3.318	2.218	-	-	2.218	-	-
Pot Cap-1 Maneuver	689	644	882	683	650	1008	1413	-	-	1533	-	-
Stage 1	831	757	-	929	828	-	-	-	-	-	-	-
Stage 2	914	820	-	812	756	-	-	-	-	-	-	-
Platoon blocked, %								-	-		-	-
Mov Cap-1 Maneuver	672	637	882	650	643	1008	1413	-	-	1533	-	-
Mov Cap-2 Maneuver	672	637	-	650	643	-	-	-	-	-	-	-
Stage 1	824	755	-	922	821	-	-	-	-	-	-	-
Stage 2	891	813	-	776	754	-	-	-	-	-	-	-

Approach	EB	WB	NB	SB
HCM Control Delay, s	9.8	10.7	1.1	0.2
HCM LOS	A	B		

Minor Lane/Major Mvmt	NBL	NBT	NBR	EBLn1	WBLn1	SBL	SBT	SBR
Capacity (veh/h)	1413	-	-	784	676	1533	-	-
HCM Lane V/C Ratio	0.008	-	-	0.049	0.069	0.003	-	-
HCM Control Delay (s)	7.6	0	-	9.8	10.7	7.4	0	-
HCM Lane LOS	A	A	-	A	B	A	A	-
HCM 95th %tile Q(veh)	0	-	-	0.2	0.2	0	-	-

Movement	EBL	EBT	EBR	WBL	WBT	WBR	NBL	NBT	NBR	SBL	SBT	SBR
Lane Configurations												
Traffic Volume (veh/h)	21	82	18	11	44	12	15	53	38	31	55	52
Future Volume (veh/h)	21	82	18	11	44	12	15	53	38	31	55	52
Number	7	4	14	3	8	18	5	2	12	1	6	16
Initial Q (Qb), veh	0	0	0	0	0	0	0	0	0	0	0	0
Ped-Bike Adj(A_pbT)	1.00		1.00	1.00		1.00	1.00		1.00	1.00		1.00
Parking Bus, Adj	1.00	1.00	1.00	1.00	1.00	1.00	1.00	1.00	1.00	1.00	1.00	1.00
Adj Sat Flow, veh/h/ln	1863	1863	1863	1863	1863	1863	1900	1863	1900	1900	1863	1900
Adj Flow Rate, veh/h	23	89	20	12	48	13	16	58	41	34	60	57
Adj No. of Lanes	1	1	1	1	1	1	0	2	0	0	2	0
Peak Hour Factor	0.92	0.92	0.92	0.92	0.92	0.92	0.92	0.92	0.92	0.92	0.92	0.92
Percent Heavy Veh, %	2	2	2	2	2	2	2	2	2	2	2	2
Cap, veh/h	712	820	697	671	820	697	209	668	435	316	503	460
Arrive On Green	0.44	0.44	0.44	0.44	0.44	0.44	0.38	0.38	0.38	0.38	0.38	0.38
Sat Flow, veh/h	1336	1863	1583	1279	1863	1583	310	1757	1144	562	1323	1210
Grp Volume(v), veh/h	23	89	20	12	48	13	61	0	54	81	0	70
Grp Sat Flow(s),veh/h/ln	1336	1863	1583	1279	1863	1583	1718	0	1493	1614	0	1482
Q Serve(g_s), s	0.5	1.4	0.4	0.3	0.7	0.2	0.0	0.0	1.2	0.0	0.0	1.5
Cycle Q Clear(g_c), s	1.2	1.4	0.4	1.7	0.7	0.2	1.1	0.0	1.2	1.4	0.0	1.5
Prop In Lane	1.00		1.00	1.00		1.00	0.26		0.77	0.42		0.82
Lane Grp Cap(c), veh/h	712	820	697	671	820	697	744	0	567	715	0	563
V/C Ratio(X)	0.03	0.11	0.03	0.02	0.06	0.02	0.08	0.00	0.09	0.11	0.00	0.12
Avail Cap(c_a), veh/h	712	820	697	671	820	697	744	0	567	715	0	563
HCM Platoon Ratio	1.00	1.00	1.00	1.00	1.00	1.00	1.00	1.00	1.00	1.00	1.00	1.00
Upstream Filter(I)	1.00	1.00	1.00	0.99	0.99	0.99	1.00	0.00	1.00	1.00	0.00	1.00
Uniform Delay (d), s/veh	8.4	8.2	7.9	8.7	8.0	7.9	9.9	0.0	10.0	10.0	0.0	10.1
Incr Delay (d2), s/veh	0.0	0.0	0.0	0.0	0.0	0.0	0.2	0.0	0.3	0.3	0.0	0.5
Initial Q Delay(d3),s/veh	0.0	0.0	0.0	0.0	0.0	0.0	0.0	0.0	0.0	0.0	0.0	0.0
%ile BackOfQ(50%),veh/ln	0.2	0.7	0.2	0.1	0.4	0.1	0.6	0.0	0.5	0.8	0.0	0.7
LnGrp Delay(d),s/veh	8.4	8.3	7.9	8.7	8.1	7.9	10.2	0.0	10.3	10.4	0.0	10.5
LnGrp LOS	A	A	A	A	A	A	B		B	B		B
Approach Vol, veh/h		132			73			115			151	
Approach Delay, s/veh		8.2			8.1			10.2			10.4	
Approach LOS		A			A			B			B	

Timer	1	2	3	4	5	6	7	8
Assigned Phs		2		4		6		8
Phs Duration (G+Y+Rc), s		23.5		26.5		23.5		26.5
Change Period (Y+Rc), s		4.5		4.5		4.5		4.5
Max Green Setting (Gmax), s		19.0		22.0		19.0		22.0
Max Q Clear Time (g_c+I1), s		3.2		3.4		3.5		3.7
Green Ext Time (p_c), s		0.3		0.3		0.4		0.1

Intersection Summary	
HCM 2010 Ctrl Delay	9.4
HCM 2010 LOS	A

Movement	EBL	EBT	EBR	WBL	WBT	WBR	NBL	NBT	NBR	SBL	SBT	SBR
Lane Configurations												
Traffic Volume (veh/h)	65	1250	6	6	540	20	4	17	5	12	23	19
Future Volume (veh/h)	65	1250	6	6	540	20	4	17	5	12	23	19
Number	7	4	14	3	8	18	5	2	12	1	6	16
Initial Q (Qb), veh	0	0	0	0	0	0	0	0	0	0	0	0
Ped-Bike Adj(A_pbT)	1.00		1.00	1.00		1.00	1.00		1.00	1.00		1.00
Parking Bus, Adj	1.00	1.00	1.00	1.00	1.00	1.00	1.00	1.00	1.00	1.00	1.00	1.00
Adj Sat Flow, veh/h/ln	1863	1863	1900	1863	1863	1900	1900	1863	1900	1900	1863	1900
Adj Flow Rate, veh/h	71	1359	7	7	587	22	4	18	5	13	25	21
Adj No. of Lanes	1	2	0	1	2	0	0	2	0	0	2	0
Peak Hour Factor	0.92	0.92	0.92	0.92	0.92	0.92	0.92	0.92	0.92	0.92	0.92	0.92
Percent Heavy Veh, %	2	2	2	2	2	2	2	2	2	2	2	2
Cap, veh/h	371	1688	9	138	1627	61	224	954	262	320	582	478
Arrive On Green	0.47	0.47	0.47	0.47	0.47	0.47	0.42	0.42	0.42	0.42	0.42	0.42
Sat Flow, veh/h	809	3610	19	396	3479	130	409	2264	622	625	1381	1135
Grp Volume(v), veh/h	71	666	700	7	298	311	14	0	13	31	0	28
Grp Sat Flow(s),veh/h/ln	809	1770	1859	396	1770	1840	1709	0	1585	1646	0	1495
Q Serve(g_s), s	5.5	28.9	28.9	1.4	9.7	9.7	0.0	0.0	0.4	0.0	0.0	1.0
Cycle Q Clear(g_c), s	15.3	28.9	28.9	30.3	9.7	9.7	0.4	0.0	0.4	0.9	0.0	1.0
Prop In Lane	1.00		0.01	1.00		0.07	0.28		0.39	0.41		0.76
Lane Grp Cap(c), veh/h	371	827	869	138	827	860	771	0	668	750	0	630
V/C Ratio(X)	0.19	0.80	0.81	0.05	0.36	0.36	0.02	0.00	0.02	0.04	0.00	0.04
Avail Cap(c_a), veh/h	478	1062	1116	190	1062	1104	771	0	668	750	0	630
HCM Platoon Ratio	1.00	1.00	1.00	1.00	1.00	1.00	1.00	1.00	1.00	1.00	1.00	1.00
Upstream Filter(I)	1.00	1.00	1.00	0.95	0.95	0.95	1.00	0.00	1.00	1.00	0.00	1.00
Uniform Delay (d), s/veh	20.2	20.5	20.5	33.4	15.3	15.3	15.2	0.0	15.2	15.3	0.0	15.4
Incr Delay (d2), s/veh	0.2	3.6	3.4	0.1	0.3	0.2	0.0	0.0	0.1	0.1	0.0	0.1
Initial Q Delay(d3),s/veh	0.0	0.0	0.0	0.0	0.0	0.0	0.0	0.0	0.0	0.0	0.0	0.0
%ile BackOfQ(50%),veh/ln	1.3	14.9	15.6	0.2	4.8	5.0	0.2	0.0	0.2	0.5	0.0	0.4
LnGrp Delay(d),s/veh	20.5	24.0	23.9	33.5	15.6	15.6	15.2	0.0	15.2	15.4	0.0	15.5
LnGrp LOS	C	C	C	C	B	B	B		B	B		B
Approach Vol, veh/h		1437			616			27			59	
Approach Delay, s/veh		23.8			15.8			15.2			15.5	
Approach LOS		C			B			B			B	

Timer	1	2	3	4	5	6	7	8
Assigned Phs		2		4		6		8
Phs Duration (G+Y+Rc), s		42.9		47.1		42.9		47.1
Change Period (Y+Rc), s		5.0		5.0		5.0		5.0
Max Green Setting (Gmax), s		26.0		54.0		26.0		54.0
Max Q Clear Time (g_c+I1), s		2.4		30.9		3.0		32.3
Green Ext Time (p_c), s		0.1		11.2		0.2		3.9

Intersection Summary	
HCM 2010 Ctrl Delay	21.1
HCM 2010 LOS	C

HCM 2010 Signalized Intersection Summary
1: E Street & 9th Street

08-14-2024

Movement	EBL	EBT	EBR	WBL	WBT	WBR	NBL	NBT	NBR	SBL	SBT	SBR
Lane Configurations												
Traffic Volume (veh/h)	36	329	22	29	396	53	30	250	38	38	170	28
Future Volume (veh/h)	36	329	22	29	396	53	30	250	38	38	170	28
Number	7	4	14	3	8	18	5	2	12	1	6	16
Initial Q (Qb), veh	0	0	0	0	0	0	0	0	0	0	0	0
Ped-Bike Adj(A_pbT)	1.00		1.00	1.00		1.00	1.00		1.00	1.00		1.00
Parking Bus, Adj	1.00	1.00	1.00	1.00	1.00	1.00	1.00	1.00	1.00	1.00	1.00	1.00
Adj Sat Flow, veh/h/ln	1569	1569	1600	1569	1569	1600	1569	1569	1600	1569	1569	1600
Adj Flow Rate, veh/h	39	358	24	32	430	58	33	272	41	41	185	30
Adj No. of Lanes	1	2	0	1	2	0	1	1	0	1	1	0
Peak Hour Factor	0.92	0.92	0.92	0.92	0.92	0.92	0.92	0.92	0.92	0.92	0.92	0.92
Percent Heavy Veh, %	2	2	2	2	2	2	2	2	2	2	2	2
Cap, veh/h	310	788	53	358	763	102	133	443	67	149	452	73
Arrive On Green	0.08	0.28	0.28	0.09	0.29	0.29	0.18	0.66	0.66	0.10	0.34	0.34
Sat Flow, veh/h	1494	2836	189	1494	2642	354	1494	1332	201	1494	1317	214
Grp Volume(v), veh/h	39	187	195	32	241	247	33	0	313	41	0	215
Grp Sat Flow(s),veh/h/ln	1494	1490	1535	1494	1490	1506	1494	0	1533	1494	0	1531
Q Serve(g_s), s	1.6	9.4	9.4	1.2	12.4	12.5	1.7	0.0	10.4	2.3	0.0	9.7
Cycle Q Clear(g_c), s	1.6	9.4	9.4	1.2	12.4	12.5	1.7	0.0	10.4	2.3	0.0	9.7
Prop In Lane	1.00		0.12	1.00		0.24	1.00		0.13	1.00		0.14
Lane Grp Cap(c), veh/h	310	414	426	358	431	435	133	0	509	149	0	526
V/C Ratio(X)	0.13	0.45	0.46	0.09	0.56	0.57	0.25	0.00	0.61	0.27	0.00	0.41
Avail Cap(c_a), veh/h	310	414	426	358	431	435	133	0	509	149	0	526
HCM Platoon Ratio	1.00	1.00	1.00	1.00	1.00	1.00	2.00	2.00	2.00	1.00	1.00	1.00
Upstream Filter(I)	0.96	0.96	0.96	1.00	1.00	1.00	0.95	0.00	0.95	1.00	0.00	1.00
Uniform Delay (d), s/veh	20.0	26.8	26.9	19.0	27.2	27.2	34.4	0.0	11.8	37.5	0.0	22.6
Incr Delay (d2), s/veh	0.8	3.4	3.3	0.5	5.2	5.3	4.2	0.0	5.2	4.5	0.0	2.3
Initial Q Delay(d3),s/veh	0.0	0.0	0.0	0.0	0.0	0.0	0.0	0.0	0.0	0.0	0.0	0.0
%ile BackOfQ(50%),veh/ln	0.7	4.2	4.4	0.6	5.7	5.8	0.9	0.0	4.9	1.1	0.0	4.4
LnGrp Delay(d),s/veh	20.8	30.2	30.2	19.5	32.4	32.5	38.6	0.0	17.0	42.0	0.0	24.9
LnGrp LOS	C	C	C	B	C	C	D		B	D		C
Approach Vol, veh/h		421			520			346			256	
Approach Delay, s/veh		29.4			31.6			19.1			27.7	
Approach LOS		C			C			B			C	

Timer	1	2	3	4	5	6	7	8
Assigned Phs	1	2	3	4	5	6	7	8
Phs Duration (G+Y+Rc), s	13.0	35.0	12.0	30.0	12.0	36.0	11.0	31.0
Change Period (Y+Rc), s	4.0	5.1	4.0	5.0	4.0	5.1	4.0	5.0
Max Green Setting (Gmax), s	9.0	29.9	8.0	25.0	8.0	30.9	7.0	26.0
Max Q Clear Time (g_c+I1), s	4.3	12.4	3.2	11.4	3.7	11.7	3.6	14.5
Green Ext Time (p_c), s	0.0	1.7	0.0	1.8	0.0	1.1	0.0	2.2

Intersection Summary	
HCM 2010 Ctrl Delay	27.5
HCM 2010 LOS	C

Movement	EBL	EBT	EBR	WBL	WBT	WBR	NBL	NBT	NBR	SBL	SBT	SBR
Lane Configurations												
Traffic Volume (veh/h)	17	25	11	9	23	14	29	294	14	4	217	8
Future Volume (veh/h)	17	25	11	9	23	14	29	294	14	4	217	8
Number	7	4	14	3	8	18	5	2	12	1	6	16
Initial Q (Qb), veh	0	0	0	0	0	0	0	0	0	0	0	0
Ped-Bike Adj(A_pbT)	1.00		1.00	1.00		1.00	1.00		1.00	1.00		1.00
Parking Bus, Adj	1.00	1.00	1.00	1.00	1.00	1.00	1.00	1.00	1.00	1.00	1.00	1.00
Adj Sat Flow, veh/h/ln	1600	1569	1600	1600	1569	1600	1569	1569	1600	1569	1569	1600
Adj Flow Rate, veh/h	18	27	12	10	25	15	32	320	15	4	236	9
Adj No. of Lanes	0	1	0	0	1	0	1	1	0	1	1	0
Peak Hour Factor	0.92	0.92	0.92	0.92	0.92	0.92	0.92	0.92	0.92	0.92	0.92	0.92
Percent Heavy Veh, %	2	2	2	2	2	2	2	2	2	2	2	2
Cap, veh/h	76	64	23	61	66	34	133	998	47	149	1024	39
Arrive On Green	0.08	0.08	0.08	0.08	0.08	0.08	0.18	1.00	1.00	0.20	1.00	1.00
Sat Flow, veh/h	303	823	300	166	844	433	1494	1487	70	1494	1501	57
Grp Volume(v), veh/h	57	0	0	50	0	0	32	0	335	4	0	245
Grp Sat Flow(s),veh/h/ln	1426	0	0	1442	0	0	1494	0	1556	1494	0	1559
Q Serve(g_s), s	0.4	0.0	0.0	0.0	0.0	0.0	1.7	0.0	0.0	0.2	0.0	0.0
Cycle Q Clear(g_c), s	3.3	0.0	0.0	2.9	0.0	0.0	1.7	0.0	0.0	0.2	0.0	0.0
Prop In Lane	0.32		0.21	0.20		0.30	1.00		0.04	1.00		0.04
Lane Grp Cap(c), veh/h	164	0	0	160	0	0	133	0	1044	149	0	1063
V/C Ratio(X)	0.35	0.00	0.00	0.31	0.00	0.00	0.24	0.00	0.32	0.03	0.00	0.23
Avail Cap(c_a), veh/h	472	0	0	476	0	0	166	0	1044	183	0	1063
HCM Platoon Ratio	1.00	1.00	1.00	1.00	1.00	1.00	2.00	2.00	2.00	2.00	2.00	2.00
Upstream Filter(I)	1.00	0.00	0.00	1.00	0.00	0.00	0.97	0.00	0.97	0.94	0.00	0.94
Uniform Delay (d), s/veh	39.8	0.0	0.0	39.6	0.0	0.0	34.4	0.0	0.0	32.5	0.0	0.0
Incr Delay (d2), s/veh	1.3	0.0	0.0	1.1	0.0	0.0	0.9	0.0	0.8	0.1	0.0	0.5
Initial Q Delay(d3),s/veh	0.0	0.0	0.0	0.0	0.0	0.0	0.0	0.0	0.0	0.0	0.0	0.0
%ile BackOfQ(50%),veh/ln	1.4	0.0	0.0	1.2	0.0	0.0	0.7	0.0	0.2	0.1	0.0	0.1
LnGrp Delay(d),s/veh	41.0	0.0	0.0	40.7	0.0	0.0	35.3	0.0	0.8	32.5	0.0	0.5
LnGrp LOS	D			D			D		A	C		A
Approach Vol, veh/h		57			50			367			249	
Approach Delay, s/veh		41.0			40.7			3.8			1.0	
Approach LOS		D			D			A			A	

Timer	1	2	3	4	5	6	7	8
Assigned Phs	1	2		4	5	6		8
Phs Duration (G+Y+Rc), s	13.0	65.4		11.6	12.0	66.4		11.6
Change Period (Y+Rc), s	4.0	5.0		4.6	4.0	5.0		4.6
Max Green Setting (Gmax), s	11.0	38.0		27.4	10.0	39.0		27.4
Max Q Clear Time (g_c+I1), s	2.2	2.0		5.3	3.7	2.0		4.9
Green Ext Time (p_c), s	0.0	2.2		0.2	0.0	1.5		0.2

Intersection Summary	
HCM 2010 Ctrl Delay	8.3
HCM 2010 LOS	A

Movement	EBL	EBT	EBR	WBL	WBT	WBR	NBL	NBT	NBR	SBL	SBT	SBR
Lane Configurations												
Traffic Volume (veh/h)	14	49	8	42	153	12	19	280	19	14	239	24
Future Volume (veh/h)	14	49	8	42	153	12	19	280	19	14	239	24
Number	7	4	14	3	8	18	5	2	12	1	6	16
Initial Q (Qb), veh	0	0	0	0	0	0	0	0	0	0	0	0
Ped-Bike Adj(A_pbT)	1.00		1.00	1.00		1.00	1.00		1.00	1.00		1.00
Parking Bus, Adj	1.00	1.00	1.00	1.00	1.00	1.00	1.00	1.00	1.00	1.00	1.00	1.00
Adj Sat Flow, veh/h/ln	1863	1863	1900	1863	1863	1900	1863	1863	1900	1863	1863	1900
Adj Flow Rate, veh/h	15	53	9	46	166	13	21	304	21	15	260	26
Adj No. of Lanes	1	2	0	1	2	0	1	1	0	1	1	0
Peak Hour Factor	0.92	0.92	0.92	0.92	0.92	0.92	0.92	0.92	0.92	0.92	0.92	0.92
Percent Heavy Veh, %	2	2	2	2	2	2	2	2	2	2	2	2
Cap, veh/h	125	262	43	173	286	22	158	1134	78	177	1116	112
Arrive On Green	0.09	0.09	0.09	0.09	0.09	0.09	0.18	1.00	1.00	0.20	1.00	1.00
Sat Flow, veh/h	1200	3040	504	1335	3328	258	1774	1723	119	1774	1667	167
Grp Volume(v), veh/h	15	30	32	46	88	91	21	0	325	15	0	286
Grp Sat Flow(s),veh/h/ln	1200	1770	1774	1335	1770	1817	1774	0	1842	1774	0	1833
Q Serve(g_s), s	1.1	1.4	1.5	3.0	4.3	4.4	0.9	0.0	0.0	0.6	0.0	0.0
Cycle Q Clear(g_c), s	5.5	1.4	1.5	4.5	4.3	4.4	0.9	0.0	0.0	0.6	0.0	0.0
Prop In Lane	1.00		0.28	1.00		0.14	1.00		0.06	1.00		0.09
Lane Grp Cap(c), veh/h	125	152	153	173	152	156	158	0	1213	177	0	1227
V/C Ratio(X)	0.12	0.20	0.21	0.27	0.58	0.58	0.13	0.00	0.27	0.08	0.00	0.23
Avail Cap(c_a), veh/h	409	570	572	488	570	586	217	0	1213	217	0	1227
HCM Platoon Ratio	1.00	1.00	1.00	1.00	1.00	1.00	2.00	2.00	2.00	2.00	2.00	2.00
Upstream Filter(I)	1.00	1.00	1.00	1.00	1.00	1.00	0.90	0.00	0.90	0.98	0.00	0.98
Uniform Delay (d), s/veh	42.2	38.2	38.3	40.4	39.5	39.6	34.1	0.0	0.0	32.6	0.0	0.0
Incr Delay (d2), s/veh	0.4	0.6	0.7	0.8	3.4	3.4	0.3	0.0	0.5	0.2	0.0	0.4
Initial Q Delay(d3),s/veh	0.0	0.0	0.0	0.0	0.0	0.0	0.0	0.0	0.0	0.0	0.0	0.0
%ile BackOfQ(50%),veh/ln	0.4	0.7	0.8	1.1	2.2	2.3	0.4	0.0	0.2	0.3	0.0	0.1
LnGrp Delay(d),s/veh	42.6	38.9	38.9	41.2	42.9	43.0	34.4	0.0	0.5	32.8	0.0	0.4
LnGrp LOS	D	D	D	D	D	D	C		A	C		A
Approach Vol, veh/h		77			225			346			301	
Approach Delay, s/veh		39.6			42.6			2.5			2.1	
Approach LOS		D			D			A			A	

Timer	1	2	3	4	5	6	7	8
Assigned Phs	1	2		4	5	6		8
Phs Duration (G+Y+Rc), s	13.0	64.3		12.7	12.0	65.3		12.7
Change Period (Y+Rc), s	4.0	5.0		5.0	4.0	5.0		5.0
Max Green Setting (Gmax), s	11.0	36.0		29.0	11.0	36.0		29.0
Max Q Clear Time (g_c+I1), s	2.6	2.0		7.5	2.9	2.0		6.5
Green Ext Time (p_c), s	0.0	2.1		0.3	0.0	1.8		1.1

Intersection Summary	
HCM 2010 Ctrl Delay	14.9
HCM 2010 LOS	B

Movement	EBL	EBT	EBR	WBL	WBT	WBR	NBL	NBT	NBR	SBL	SBT	SBR
Lane Configurations												
Traffic Volume (veh/h)	28	703	36	30	885	33	69	263	46	40	163	53
Future Volume (veh/h)	28	703	36	30	885	33	69	263	46	40	163	53
Number	7	4	14	3	8	18	5	2	12	1	6	16
Initial Q (Qb), veh	0	0	0	0	0	0	0	0	0	0	0	0
Ped-Bike Adj(A_pbT)	1.00		1.00	1.00		1.00	1.00		1.00	1.00		1.00
Parking Bus, Adj	1.00	1.00	1.00	1.00	1.00	1.00	1.00	1.00	1.00	1.00	1.00	1.00
Adj Sat Flow, veh/h/ln	1863	1863	1900	1863	1863	1900	1863	1863	1900	1863	1863	1900
Adj Flow Rate, veh/h	30	764	39	33	962	36	75	286	50	43	177	58
Adj No. of Lanes	1	2	0	1	2	0	1	1	0	1	1	0
Peak Hour Factor	0.92	0.92	0.92	0.92	0.92	0.92	0.92	0.92	0.92	0.92	0.92	0.92
Percent Heavy Veh, %	2	2	2	2	2	2	2	2	2	2	2	2
Cap, veh/h	141	1216	62	241	1235	46	150	637	111	117	529	173
Arrive On Green	0.71	0.71	0.71	0.35	0.35	0.35	0.08	0.41	0.41	0.13	0.79	0.79
Sat Flow, veh/h	562	3427	175	675	3479	130	1774	1545	270	1774	1344	441
Grp Volume(v), veh/h	30	394	409	33	489	509	75	0	336	43	0	235
Grp Sat Flow(s),veh/h/ln	562	1770	1832	675	1770	1840	1774	0	1815	1774	0	1785
Q Serve(g_s), s	4.2	10.5	10.5	3.5	22.2	22.2	3.6	0.0	12.0	2.0	0.0	3.4
Cycle Q Clear(g_c), s	26.4	10.5	10.5	14.0	22.2	22.2	3.6	0.0	12.0	2.0	0.0	3.4
Prop In Lane	1.00		0.10	1.00		0.07	1.00		0.15	1.00		0.25
Lane Grp Cap(c), veh/h	141	628	650	241	628	653	150	0	749	117	0	703
V/C Ratio(X)	0.21	0.63	0.63	0.14	0.78	0.78	0.50	0.00	0.45	0.37	0.00	0.33
Avail Cap(c_a), veh/h	160	688	712	264	688	715	189	0	749	197	0	703
HCM Platoon Ratio	2.00	2.00	2.00	1.00	1.00	1.00	1.00	1.00	1.00	2.00	2.00	2.00
Upstream Filter(I)	0.83	0.83	0.83	1.00	1.00	1.00	1.00	0.00	1.00	0.98	0.00	0.98
Uniform Delay (d), s/veh	22.0	9.9	9.9	27.5	25.9	25.9	39.4	0.0	19.1	37.4	0.0	6.2
Incr Delay (d2), s/veh	0.9	1.6	1.6	0.4	5.7	5.5	2.6	0.0	1.9	1.9	0.0	1.3
Initial Q Delay(d3),s/veh	0.0	0.0	0.0	0.0	0.0	0.0	0.0	0.0	0.0	0.0	0.0	0.0
%ile BackOfQ(50%),veh/ln	0.7	5.1	5.3	0.7	11.7	12.2	1.9	0.0	6.4	1.0	0.0	1.8
LnGrp Delay(d),s/veh	22.9	11.6	11.5	27.8	31.6	31.4	41.9	0.0	21.0	39.2	0.0	7.4
LnGrp LOS	C	B	B	C	C	C	D		C	D		A
Approach Vol, veh/h		833			1031			411			278	
Approach Delay, s/veh		12.0			31.4			24.8			12.3	
Approach LOS		B			C			C			B	

Timer	1	2	3	4	5	6	7	8
Assigned Phs	1	2		4	5	6		8
Phs Duration (G+Y+Rc), s	9.9	43.1		36.9	11.6	41.4		36.9
Change Period (Y+Rc), s	4.0	6.0		5.0	4.0	6.0		5.0
Max Green Setting (Gmax), s	10.0	30.0		35.0	9.6	30.4		35.0
Max Q Clear Time (g_c+I1), s	14.0	14.0		28.4	5.6	5.4		24.2
Green Ext Time (p_c), s	0.0	2.5		3.5	0.0	2.0		6.2

Intersection Summary	
HCM 2010 Ctrl Delay	21.9
HCM 2010 LOS	C

Movement	EBL	EBT	EBR	WBL	WBT	WBR	NBL	NBT	NBR	SBL	SBT	SBR
Lane Configurations												
Traffic Volume (veh/h)	12	364	30	9	444	18	33	63	14	9	29	20
Future Volume (veh/h)	12	364	30	9	444	18	33	63	14	9	29	20
Number	7	4	14	3	8	18	5	2	12	1	6	16
Initial Q (Qb), veh	0	0	0	0	0	0	0	0	0	0	0	0
Ped-Bike Adj(A_pbT)	1.00		1.00	1.00		1.00	1.00		1.00	1.00		1.00
Parking Bus, Adj	1.00	1.00	1.00	1.00	1.00	1.00	1.00	1.00	1.00	1.00	1.00	1.00
Adj Sat Flow, veh/h/ln	1900	1863	1900	1900	1863	1900	1900	1863	1900	1900	1863	1900
Adj Flow Rate, veh/h	13	396	33	10	483	20	36	68	15	10	32	22
Adj No. of Lanes	0	2	0	0	2	0	0	2	0	0	2	0
Peak Hour Factor	0.92	0.92	0.92	0.92	0.92	0.92	0.92	0.92	0.92	0.92	0.92	0.92
Percent Heavy Veh, %	2	2	2	2	2	2	2	2	2	2	2	2
Cap, veh/h	89	1338	109	83	1411	58	413	738	167	232	659	421
Arrive On Green	0.42	0.42	0.42	0.42	0.42	0.42	0.38	0.38	0.38	0.38	0.38	0.38
Sat Flow, veh/h	32	3186	260	19	3359	137	791	1943	441	366	1735	1107
Grp Volume(v), veh/h	233	0	209	269	0	244	64	0	55	34	0	30
Grp Sat Flow(s),veh/h/ln	1828	0	1649	1844	0	1671	1558	0	1617	1708	0	1500
Q Serve(g_s), s	0.0	0.0	4.2	0.0	0.0	4.9	0.0	0.0	1.1	0.0	0.0	0.6
Cycle Q Clear(g_c), s	4.1	0.0	4.2	4.9	0.0	4.9	1.1	0.0	1.1	0.6	0.0	0.6
Prop In Lane	0.06		0.16	0.04		0.08	0.56		0.27	0.29		0.74
Lane Grp Cap(c), veh/h	844	0	693	849	0	702	704	0	615	742	0	570
V/C Ratio(X)	0.28	0.00	0.30	0.32	0.00	0.35	0.09	0.00	0.09	0.05	0.00	0.05
Avail Cap(c_a), veh/h	844	0	693	849	0	702	704	0	615	742	0	570
HCM Platoon Ratio	1.00	1.00	1.00	1.00	1.00	1.00	1.00	1.00	1.00	1.00	1.00	1.00
Upstream Filter(I)	1.00	0.00	1.00	0.82	0.00	0.82	1.00	0.00	1.00	1.00	0.00	1.00
Uniform Delay (d), s/veh	9.6	0.0	9.6	9.8	0.0	9.8	10.0	0.0	9.9	9.8	0.0	9.8
Incr Delay (d2), s/veh	0.2	0.0	0.2	0.2	0.0	0.2	0.3	0.0	0.3	0.1	0.0	0.2
Initial Q Delay(d3),s/veh	0.0	0.0	0.0	0.0	0.0	0.0	0.0	0.0	0.0	0.0	0.0	0.0
%ile BackOfQ(50%),veh/ln	2.1	0.0	2.0	2.5	0.0	2.3	0.6	0.0	0.5	0.3	0.0	0.3
LnGrp Delay(d),s/veh	9.8	0.0	9.9	10.0	0.0	10.1	10.2	0.0	10.2	9.9	0.0	10.0
LnGrp LOS	A		A	B		B	B		B	A		A
Approach Vol, veh/h		442			513			119			64	
Approach Delay, s/veh		9.8			10.0			10.2			9.9	
Approach LOS		A			B			B			A	

Timer	1	2	3	4	5	6	7	8
Assigned Phs		2		4		6		8
Phs Duration (G+Y+Rc), s		24.0		26.0		24.0		26.0
Change Period (Y+Rc), s		5.0		5.0		5.0		5.0
Max Green Setting (Gmax), s		19.0		21.0		19.0		21.0
Max Q Clear Time (g_c+I1), s		3.1		6.2		2.6		6.9
Green Ext Time (p_c), s		0.5		2.3		0.2		2.6

Intersection Summary	
HCM 2010 Ctrl Delay	10.0
HCM 2010 LOS	A

Intersection	
Int Delay, s/veh	4.5

Movement	EBL	EBT	EBR	WBL	WBT	WBR	NBL	NBT	NBR	SBL	SBT	SBR
Lane Configurations												
Traffic Vol, veh/h	3	12	7	28	25	26	13	84	5	11	42	11
Future Vol, veh/h	3	12	7	28	25	26	13	84	5	11	42	11
Conflicting Peds, #/hr	0	0	0	0	0	0	0	0	0	0	0	0
Sign Control	Stop	Stop	Stop	Stop	Stop	Stop	Free	Free	Free	Free	Free	Free
RT Channelized	-	-	None	-	-	None	-	-	None	-	-	None
Storage Length	-	-	-	-	-	-	-	-	0	-	-	0
Veh in Median Storage, #	-	0	-	-	0	-	-	0	-	-	0	-
Grade, %	-	0	-	-	0	-	-	0	-	-	0	-
Peak Hour Factor	92	92	92	92	92	92	92	92	92	92	92	92
Heavy Vehicles, %	2	2	2	2	2	2	2	2	2	2	2	2
Mvmt Flow	3	13	8	30	27	28	14	91	5	12	46	12

Major/Minor	Minor2			Minor1			Major1			Major2		
Conflicting Flow All	219	194	46	206	201	91	58	0	0	96	0	0
Stage 1	70	70	-	119	119	-	-	-	-	-	-	-
Stage 2	149	124	-	87	82	-	-	-	-	-	-	-
Critical Hdwy	7.12	6.52	6.22	7.12	6.52	6.22	4.12	-	-	4.12	-	-
Critical Hdwy Stg 1	6.12	5.52	-	6.12	5.52	-	-	-	-	-	-	-
Critical Hdwy Stg 2	6.12	5.52	-	6.12	5.52	-	-	-	-	-	-	-
Follow-up Hdwy	3.518	4.018	3.318	3.518	4.018	3.318	2.218	-	-	2.218	-	-
Pot Cap-1 Maneuver	737	701	1023	752	695	967	1546	-	-	1498	-	-
Stage 1	940	837	-	885	797	-	-	-	-	-	-	-
Stage 2	854	793	-	921	827	-	-	-	-	-	-	-
Platoon blocked, %								-	-		-	-
Mov Cap-1 Maneuver	684	688	1023	726	682	967	1546	-	-	1498	-	-
Mov Cap-2 Maneuver	684	688	-	726	682	-	-	-	-	-	-	-
Stage 1	931	830	-	876	789	-	-	-	-	-	-	-
Stage 2	792	785	-	893	820	-	-	-	-	-	-	-

Approach	EB	WB	NB	SB
HCM Control Delay, s	9.8	10.2	0.9	1.3
HCM LOS	A	B		

Minor Lane/Major Mvmt	NBL	NBT	NBR	EBLn1	WBLn1	SBL	SBT	SBR
Capacity (veh/h)	1546	-	-	767	774	1498	-	-
HCM Lane V/C Ratio	0.009	-	-	0.031	0.111	0.008	-	-
HCM Control Delay (s)	7.3	0	-	9.8	10.2	7.4	0	-
HCM Lane LOS	A	A	-	A	B	A	A	-
HCM 95th %tile Q(veh)	0	-	-	0.1	0.4	0	-	-

Movement	EBL	EBT	EBR	WBL	WBT	WBR	NBL	NBT	NBR	SBL	SBT	SBR
Lane Configurations												
Traffic Volume (veh/h)	13	46	13	12	170	14	30	59	14	13	66	30
Future Volume (veh/h)	13	46	13	12	170	14	30	59	14	13	66	30
Number	7	4	14	3	8	18	5	2	12	1	6	16
Initial Q (Qb), veh	0	0	0	0	0	0	0	0	0	0	0	0
Ped-Bike Adj(A_pbT)	1.00		1.00	1.00		1.00	1.00		1.00	1.00		1.00
Parking Bus, Adj	1.00	1.00	1.00	1.00	1.00	1.00	1.00	1.00	1.00	1.00	1.00	1.00
Adj Sat Flow, veh/h/ln	1863	1863	1863	1863	1863	1863	1900	1863	1900	1900	1863	1900
Adj Flow Rate, veh/h	14	50	14	13	185	15	33	64	15	14	72	33
Adj No. of Lanes	1	1	1	1	1	1	0	2	0	0	2	0
Peak Hour Factor	0.92	0.92	0.92	0.92	0.92	0.92	0.92	0.92	0.92	0.92	0.92	0.92
Percent Heavy Veh, %	2	2	2	2	2	2	2	2	2	2	2	2
Cap, veh/h	589	820	697	710	820	697	396	730	177	183	810	346
Arrive On Green	0.44	0.44	0.44	0.44	0.44	0.44	0.38	0.38	0.38	0.38	0.38	0.38
Sat Flow, veh/h	1178	1863	1583	1332	1863	1583	750	1922	466	250	2132	911
Grp Volume(v), veh/h	14	50	14	13	185	15	60	0	52	63	0	56
Grp Sat Flow(s),veh/h/ln	1178	1863	1583	1332	1863	1583	1525	0	1613	1759	0	1534
Q Serve(g_s), s	0.4	0.8	0.2	0.3	3.1	0.3	0.0	0.0	1.0	0.0	0.0	1.2
Cycle Q Clear(g_c), s	3.5	0.8	0.2	1.1	3.1	0.3	1.0	0.0	1.0	1.1	0.0	1.2
Prop In Lane	1.00		1.00	1.00		1.00	0.55		0.29	0.22		0.59
Lane Grp Cap(c), veh/h	589	820	697	710	820	697	691	0	613	756	0	583
V/C Ratio(X)	0.02	0.06	0.02	0.02	0.23	0.02	0.09	0.00	0.08	0.08	0.00	0.10
Avail Cap(c_a), veh/h	589	820	697	710	820	697	691	0	613	756	0	583
HCM Platoon Ratio	1.00	1.00	1.00	1.00	1.00	1.00	1.00	1.00	1.00	1.00	1.00	1.00
Upstream Filter(I)	1.00	1.00	1.00	0.91	0.91	0.91	0.96	0.00	0.96	1.00	0.00	1.00
Uniform Delay (d), s/veh	9.8	8.1	7.9	8.4	8.7	7.9	9.9	0.0	9.9	9.9	0.0	10.0
Incr Delay (d2), s/veh	0.0	0.0	0.0	0.0	0.0	0.0	0.2	0.0	0.3	0.2	0.0	0.3
Initial Q Delay(d3),s/veh	0.0	0.0	0.0	0.0	0.0	0.0	0.0	0.0	0.0	0.0	0.0	0.0
%ile BackOfQ(50%),veh/ln	0.1	0.4	0.1	0.1	1.6	0.1	0.6	0.0	0.5	0.6	0.0	0.5
LnGrp Delay(d),s/veh	9.8	8.1	7.9	8.4	8.8	7.9	10.2	0.0	10.2	10.2	0.0	10.3
LnGrp LOS	A	A	A	A	A	A	B		B	B		B
Approach Vol, veh/h		78			213			112			119	
Approach Delay, s/veh		8.3			8.7			10.2			10.2	
Approach LOS		A			A			B			B	

Timer	1	2	3	4	5	6	7	8
Assigned Phs		2		4		6		8
Phs Duration (G+Y+Rc), s		23.5		26.5		23.5		26.5
Change Period (Y+Rc), s		4.5		4.5		4.5		4.5
Max Green Setting (Gmax), s		19.0		22.0		19.0		22.0
Max Q Clear Time (g_c+I1), s		3.0		5.5		3.2		5.1
Green Ext Time (p_c), s		0.3		0.1		0.3		0.6

Intersection Summary	
HCM 2010 Ctrl Delay	9.3
HCM 2010 LOS	A

Movement	EBL	EBT	EBR	WBL	WBT	WBR	NBL	NBT	NBR	SBL	SBT	SBR
Lane Configurations												
Traffic Volume (veh/h)	59	701	34	9	964	16	23	30	13	18	38	83
Future Volume (veh/h)	59	701	34	9	964	16	23	30	13	18	38	83
Number	7	4	14	3	8	18	5	2	12	1	6	16
Initial Q (Qb), veh	0	0	0	0	0	0	0	0	0	0	0	0
Ped-Bike Adj(A_pbT)	1.00		1.00	1.00		1.00	1.00		1.00	1.00		1.00
Parking Bus, Adj	1.00	1.00	1.00	1.00	1.00	1.00	1.00	1.00	1.00	1.00	1.00	1.00
Adj Sat Flow, veh/h/ln	1863	1863	1900	1863	1863	1900	1900	1863	1900	1900	1863	1900
Adj Flow Rate, veh/h	64	762	37	10	1048	17	25	33	14	20	41	90
Adj No. of Lanes	1	2	0	1	2	0	0	2	0	0	2	0
Peak Hour Factor	0.92	0.92	0.92	0.92	0.92	0.92	0.92	0.92	0.92	0.92	0.92	0.92
Percent Heavy Veh, %	2	2	2	2	2	2	2	2	2	2	2	2
Cap, veh/h	184	1490	72	264	1546	25	462	644	290	276	541	656
Arrive On Green	0.43	0.43	0.43	0.43	0.43	0.43	0.46	0.46	0.46	0.46	0.46	0.46
Sat Flow, veh/h	528	3436	167	678	3564	58	868	1414	637	489	1189	1441
Grp Volume(v), veh/h	64	392	407	10	520	545	37	0	35	61	0	90
Grp Sat Flow(s),veh/h/ln	528	1770	1833	678	1770	1853	1337	0	1583	1678	0	1441
Q Serve(g_s), s	10.0	14.5	14.5	1.0	21.2	21.2	0.1	0.0	1.1	0.0	0.0	3.3
Cycle Q Clear(g_c), s	31.2	14.5	14.5	15.5	21.2	21.2	3.4	0.0	1.1	1.7	0.0	3.3
Prop In Lane	1.00		0.09	1.00		0.03	0.67		0.40	0.33		1.00
Lane Grp Cap(c), veh/h	184	767	795	264	767	803	676	0	721	817	0	656
V/C Ratio(X)	0.35	0.51	0.51	0.04	0.68	0.68	0.06	0.00	0.05	0.07	0.00	0.14
Avail Cap(c_a), veh/h	266	1042	1080	370	1042	1091	676	0	721	817	0	656
HCM Platoon Ratio	1.00	1.00	1.00	1.00	1.00	1.00	1.00	1.00	1.00	1.00	1.00	1.00
Upstream Filter(I)	1.00	1.00	1.00	0.62	0.62	0.62	1.00	0.00	1.00	1.00	0.00	1.00
Uniform Delay (d), s/veh	33.0	18.5	18.6	24.2	20.4	20.4	13.7	0.0	13.7	13.8	0.0	14.2
Incr Delay (d2), s/veh	1.1	0.5	0.5	0.0	0.7	0.6	0.2	0.0	0.1	0.2	0.0	0.4
Initial Q Delay(d3),s/veh	0.0	0.0	0.0	0.0	0.0	0.0	0.0	0.0	0.0	0.0	0.0	0.0
%ile BackOfQ(50%),veh/ln	1.5	7.2	7.5	0.2	10.4	10.9	0.5	0.0	0.5	0.9	0.0	1.4
LnGrp Delay(d),s/veh	34.1	19.1	19.1	24.2	21.1	21.1	13.8	0.0	13.8	14.0	0.0	14.7
LnGrp LOS	C	B	B	C	C	C	B		B	B		B
Approach Vol, veh/h		863			1075			72			151	
Approach Delay, s/veh		20.2			21.1			13.8			14.4	
Approach LOS		C			C			B			B	

Timer	1	2	3	4	5	6	7	8
Assigned Phs		2		4		6		8
Phs Duration (G+Y+Rc), s		46.0		44.0		46.0		44.0
Change Period (Y+Rc), s		5.0		5.0		5.0		5.0
Max Green Setting (Gmax), s		27.0		53.0		27.0		53.0
Max Q Clear Time (g_c+I1), s		5.4		33.2		5.3		23.2
Green Ext Time (p_c), s		0.3		5.8		0.8		8.4

Intersection Summary	
HCM 2010 Ctrl Delay	20.0
HCM 2010 LOS	C

HCM 2010 Signalized Intersection Summary
1: E Street & 9th Street

08-14-2024

Movement	EBL	EBT	EBR	WBL	WBT	WBR	NBL	NBT	NBR	SBL	SBT	SBR
Lane Configurations												
Traffic Volume (veh/h)	12	353	26	39	325	55	12	102	16	43	162	20
Future Volume (veh/h)	12	353	26	39	325	55	12	102	16	43	162	20
Number	7	4	14	3	8	18	5	2	12	1	6	16
Initial Q (Qb), veh	0	0	0	0	0	0	0	0	0	0	0	0
Ped-Bike Adj(A_pbT)	1.00		1.00	1.00		1.00	1.00		1.00	1.00		1.00
Parking Bus, Adj	1.00	1.00	1.00	1.00	1.00	1.00	1.00	1.00	1.00	1.00	1.00	1.00
Adj Sat Flow, veh/h/ln	1569	1569	1600	1569	1569	1600	1569	1569	1600	1569	1569	1600
Adj Flow Rate, veh/h	13	384	28	42	353	60	13	111	17	47	176	22
Adj No. of Lanes	1	2	0	1	2	0	1	1	0	1	1	0
Peak Hour Factor	0.92	0.92	0.92	0.92	0.92	0.92	0.92	0.92	0.92	0.92	0.92	0.92
Percent Heavy Veh, %	2	2	2	2	2	2	2	2	2	2	2	2
Cap, veh/h	348	814	59	357	766	129	133	427	65	149	454	57
Arrive On Green	0.08	0.29	0.29	0.09	0.30	0.30	0.18	0.64	0.64	0.10	0.33	0.33
Sat Flow, veh/h	1494	2818	205	1494	2553	430	1494	1329	204	1494	1368	171
Grp Volume(v), veh/h	13	202	210	42	205	208	13	0	128	47	0	198
Grp Sat Flow(s),veh/h/ln	1494	1490	1533	1494	1490	1493	1494	0	1533	1494	0	1538
Q Serve(g_s), s	0.5	10.1	10.1	1.6	10.0	10.2	0.7	0.0	3.2	2.6	0.0	8.9
Cycle Q Clear(g_c), s	0.5	10.1	10.1	1.6	10.0	10.2	0.7	0.0	3.2	2.6	0.0	8.9
Prop In Lane	1.00		0.13	1.00		0.29	1.00		0.13	1.00		0.11
Lane Grp Cap(c), veh/h	348	431	443	357	447	448	133	0	492	149	0	511
V/C Ratio(X)	0.04	0.47	0.47	0.12	0.46	0.47	0.10	0.00	0.26	0.31	0.00	0.39
Avail Cap(c_a), veh/h	348	431	443	357	447	448	133	0	492	149	0	511
HCM Platoon Ratio	1.00	1.00	1.00	1.00	1.00	1.00	2.00	2.00	2.00	1.00	1.00	1.00
Upstream Filter(I)	0.95	0.95	0.95	1.00	1.00	1.00	0.99	0.00	0.99	1.00	0.00	1.00
Uniform Delay (d), s/veh	18.7	26.3	26.4	18.5	25.6	25.6	34.0	0.0	11.5	37.6	0.0	23.0
Incr Delay (d2), s/veh	0.2	3.5	3.4	0.7	3.4	3.4	1.5	0.0	1.3	5.4	0.0	2.2
Initial Q Delay(d3),s/veh	0.0	0.0	0.0	0.0	0.0	0.0	0.0	0.0	0.0	0.0	0.0	0.0
%ile BackOfQ(50%),veh/ln	0.2	4.5	4.7	0.7	4.5	4.7	0.3	0.0	1.5	1.3	0.0	4.1
LnGrp Delay(d),s/veh	18.9	29.8	29.8	19.2	28.9	29.1	35.4	0.0	12.8	43.1	0.0	25.2
LnGrp LOS	B	C	C	B	C	C	D		B	D		C
Approach Vol, veh/h		425			455			141			245	
Approach Delay, s/veh		29.4			28.1			14.9			28.7	
Approach LOS		C			C			B			C	

Timer	1	2	3	4	5	6	7	8
Assigned Phs	1	2	3	4	5	6	7	8
Phs Duration (G+Y+Rc), s	13.0	34.0	12.0	31.0	12.0	35.0	11.0	32.0
Change Period (Y+Rc), s	4.0	5.1	4.0	5.0	4.0	5.1	4.0	5.0
Max Green Setting (Gmax), s	9.0	28.9	8.0	26.0	8.0	29.9	7.0	27.0
Max Q Clear Time (g_c+I1), s	4.6	5.2	3.6	12.1	2.7	10.9	2.5	12.2
Green Ext Time (p_c), s	0.0	0.6	0.0	2.0	0.0	1.0	0.0	2.1

Intersection Summary	
HCM 2010 Ctrl Delay	27.2
HCM 2010 LOS	C

Movement	EBL	EBT	EBR	WBL	WBT	WBR	NBL	NBT	NBR	SBL	SBT	SBR
Lane Configurations												
Traffic Volume (veh/h)	3	16	5	3	23	5	14	144	20	4	195	13
Future Volume (veh/h)	3	16	5	3	23	5	14	144	20	4	195	13
Number	7	4	14	3	8	18	5	2	12	1	6	16
Initial Q (Qb), veh	0	0	0	0	0	0	0	0	0	0	0	0
Ped-Bike Adj(A_pbT)	1.00		1.00	1.00		1.00	1.00		1.00	1.00		1.00
Parking Bus, Adj	1.00	1.00	1.00	1.00	1.00	1.00	1.00	1.00	1.00	1.00	1.00	1.00
Adj Sat Flow, veh/h/ln	1600	1569	1600	1600	1569	1600	1569	1569	1600	1569	1569	1600
Adj Flow Rate, veh/h	3	17	5	3	25	5	15	157	22	4	212	14
Adj No. of Lanes	0	1	0	0	1	0	1	1	0	1	1	0
Peak Hour Factor	0.92	0.92	0.92	0.92	0.92	0.92	0.92	0.92	0.92	0.92	0.92	0.92
Percent Heavy Veh, %	2	2	2	2	2	2	2	2	2	2	2	2
Cap, veh/h	51	87	23	48	95	18	133	904	127	149	993	66
Arrive On Green	0.08	0.08	0.08	0.08	0.08	0.08	0.18	1.00	1.00	0.20	1.00	1.00
Sat Flow, veh/h	77	1114	298	59	1220	228	1494	1347	189	1494	1456	96
Grp Volume(v), veh/h	25	0	0	33	0	0	15	0	179	4	0	226
Grp Sat Flow(s),veh/h/ln	1489	0	0	1508	0	0	1494	0	1535	1494	0	1552
Q Serve(g_s), s	0.0	0.0	0.0	0.0	0.0	0.0	0.8	0.0	0.0	0.2	0.0	0.0
Cycle Q Clear(g_c), s	1.4	0.0	0.0	1.8	0.0	0.0	0.8	0.0	0.0	0.2	0.0	0.0
Prop In Lane	0.12		0.20	0.09		0.15	1.00		0.12	1.00		0.06
Lane Grp Cap(c), veh/h	161	0	0	161	0	0	133	0	1030	149	0	1059
V/C Ratio(X)	0.16	0.00	0.00	0.21	0.00	0.00	0.11	0.00	0.17	0.03	0.00	0.21
Avail Cap(c_a), veh/h	490	0	0	497	0	0	183	0	1030	199	0	1059
HCM Platoon Ratio	1.00	1.00	1.00	1.00	1.00	1.00	2.00	2.00	2.00	2.00	2.00	2.00
Upstream Filter(I)	1.00	0.00	0.00	1.00	0.00	0.00	0.99	0.00	0.99	0.95	0.00	0.95
Uniform Delay (d), s/veh	38.9	0.0	0.0	39.1	0.0	0.0	34.0	0.0	0.0	32.5	0.0	0.0
Incr Delay (d2), s/veh	0.4	0.0	0.0	0.6	0.0	0.0	0.4	0.0	0.4	0.1	0.0	0.4
Initial Q Delay(d3),s/veh	0.0	0.0	0.0	0.0	0.0	0.0	0.0	0.0	0.0	0.0	0.0	0.0
%ile BackOfQ(50%),veh/ln	0.6	0.0	0.0	0.8	0.0	0.0	0.3	0.0	0.1	0.1	0.0	0.1
LnGrp Delay(d),s/veh	39.4	0.0	0.0	39.7	0.0	0.0	34.4	0.0	0.4	32.5	0.0	0.4
LnGrp LOS	D			D			C		A	C		A
Approach Vol, veh/h		25			33			194			230	
Approach Delay, s/veh		39.4			39.7			3.0			1.0	
Approach LOS		D			D			A			A	

Timer	1	2	3	4	5	6	7	8
Assigned Phs	1	2		4	5	6		8
Phs Duration (G+Y+Rc), s	13.0	65.4		11.6	12.0	66.4		11.6
Change Period (Y+Rc), s	4.0	5.0		4.6	4.0	5.0		4.6
Max Green Setting (Gmax), s	12.0	37.0		27.4	11.0	38.0		27.4
Max Q Clear Time (g_c+I1), s	2.2	2.0		3.4	2.8	2.0		3.8
Green Ext Time (p_c), s	0.0	1.1		0.1	0.0	1.4		0.1

Intersection Summary	
HCM 2010 Ctrl Delay	6.4
HCM 2010 LOS	A

Movement	EBL	EBT	EBR	WBL	WBT	WBR	NBL	NBT	NBR	SBL	SBT	SBR
Lane Configurations												
Traffic Volume (veh/h)	31	98	27	12	45	10	15	159	46	13	185	11
Future Volume (veh/h)	31	98	27	12	45	10	15	159	46	13	185	11
Number	7	4	14	3	8	18	5	2	12	1	6	16
Initial Q (Qb), veh	0	0	0	0	0	0	0	0	0	0	0	0
Ped-Bike Adj(A_pbT)	1.00		1.00	1.00		1.00	1.00		1.00	1.00		1.00
Parking Bus, Adj	1.00	1.00	1.00	1.00	1.00	1.00	1.00	1.00	1.00	1.00	1.00	1.00
Adj Sat Flow, veh/h/ln	1863	1863	1900	1863	1863	1900	1863	1863	1900	1863	1863	1900
Adj Flow Rate, veh/h	34	107	29	13	49	11	16	173	50	14	201	12
Adj No. of Lanes	1	2	0	1	2	0	1	1	0	1	1	0
Peak Hour Factor	0.92	0.92	0.92	0.92	0.92	0.92	0.92	0.92	0.92	0.92	0.92	0.92
Percent Heavy Veh, %	2	2	2	2	2	2	2	2	2	2	2	2
Cap, veh/h	162	216	57	129	225	49	158	927	268	177	1180	70
Arrive On Green	0.08	0.08	0.08	0.08	0.08	0.08	0.18	1.00	1.00	0.20	1.00	1.00
Sat Flow, veh/h	1337	2776	728	1248	2893	629	1774	1390	402	1774	1740	104
Grp Volume(v), veh/h	34	67	69	13	29	31	16	0	223	14	0	213
Grp Sat Flow(s),veh/h/ln	1337	1770	1734	1248	1770	1752	1774	0	1792	1774	0	1844
Q Serve(g_s), s	2.2	3.3	3.4	0.9	1.4	1.5	0.7	0.0	0.0	0.6	0.0	0.0
Cycle Q Clear(g_c), s	3.7	3.3	3.4	4.4	1.4	1.5	0.7	0.0	0.0	0.6	0.0	0.0
Prop In Lane	1.00		0.42	1.00		0.36	1.00		0.22	1.00		0.06
Lane Grp Cap(c), veh/h	162	138	135	129	138	136	158	0	1195	177	0	1250
V/C Ratio(X)	0.21	0.49	0.51	0.10	0.21	0.22	0.10	0.00	0.19	0.08	0.00	0.17
Avail Cap(c_a), veh/h	489	570	559	434	570	564	217	0	1195	217	0	1250
HCM Platoon Ratio	1.00	1.00	1.00	1.00	1.00	1.00	2.00	2.00	2.00	2.00	2.00	2.00
Upstream Filter(I)	1.00	1.00	1.00	1.00	1.00	1.00	0.97	0.00	0.97	0.99	0.00	0.99
Uniform Delay (d), s/veh	40.7	39.8	39.9	42.0	38.9	39.0	34.0	0.0	0.0	32.6	0.0	0.0
Incr Delay (d2), s/veh	0.6	2.6	3.0	0.3	0.8	0.8	0.3	0.0	0.3	0.2	0.0	0.3
Initial Q Delay(d3),s/veh	0.0	0.0	0.0	0.0	0.0	0.0	0.0	0.0	0.0	0.0	0.0	0.0
%ile BackOfQ(50%),veh/ln	0.8	1.7	1.8	0.3	0.7	0.7	0.3	0.0	0.1	0.3	0.0	0.1
LnGrp Delay(d),s/veh	41.3	42.4	42.8	42.3	39.7	39.8	34.3	0.0	0.3	32.8	0.0	0.3
LnGrp LOS	D	D	D	D	D	D	C		A	C		A
Approach Vol, veh/h		170			73			239			227	
Approach Delay, s/veh		42.4			40.2			2.6			2.3	
Approach LOS		D			D			A			A	

Timer	1	2	3	4	5	6	7	8
Assigned Phs	1	2		4	5	6		8
Phs Duration (G+Y+Rc), s	13.0	65.0		12.0	12.0	66.0		12.0
Change Period (Y+Rc), s	4.0	5.0		5.0	4.0	5.0		5.0
Max Green Setting (Gmax), s	11.0	36.0		29.0	11.0	36.0		29.0
Max Q Clear Time (g_c+I1), s	2.6	2.0		5.7	2.7	2.0		6.4
Green Ext Time (p_c), s	0.0	1.4		0.8	0.0	1.3		0.3

Intersection Summary	
HCM 2010 Ctrl Delay	15.9
HCM 2010 LOS	B

Movement	EBL	EBT	EBR	WBL	WBT	WBR	NBL	NBT	NBR	SBL	SBT	SBR
Lane Configurations												
Traffic Volume (veh/h)	105	1172	39	13	545	16	22	98	28	27	150	30
Future Volume (veh/h)	105	1172	39	13	545	16	22	98	28	27	150	30
Number	7	4	14	3	8	18	5	2	12	1	6	16
Initial Q (Qb), veh	0	0	0	0	0	0	0	0	0	0	0	0
Ped-Bike Adj(A_pbT)	1.00		1.00	1.00		1.00	1.00		1.00	1.00		1.00
Parking Bus, Adj	1.00	1.00	1.00	1.00	1.00	1.00	1.00	1.00	1.00	1.00	1.00	1.00
Adj Sat Flow, veh/h/ln	1863	1863	1900	1863	1863	1900	1863	1863	1900	1863	1863	1900
Adj Flow Rate, veh/h	114	1274	42	14	592	17	24	107	30	29	163	33
Adj No. of Lanes	1	2	0	1	2	0	1	1	0	1	1	0
Peak Hour Factor	0.92	0.92	0.92	0.92	0.92	0.92	0.92	0.92	0.92	0.92	0.92	0.92
Percent Heavy Veh, %	2	2	2	2	2	2	2	2	2	2	2	2
Cap, veh/h	296	1364	45	119	1371	39	80	548	154	91	599	121
Arrive On Green	0.78	0.78	0.78	0.39	0.39	0.39	0.05	0.39	0.39	0.10	0.80	0.80
Sat Flow, veh/h	809	3497	115	416	3514	101	1774	1401	393	1774	1504	305
Grp Volume(v), veh/h	114	644	672	14	298	311	24	0	137	29	0	196
Grp Sat Flow(s),veh/h/ln	809	1770	1842	416	1770	1845	1774	0	1793	1774	0	1809
Q Serve(g_s), s	8.2	26.5	26.6	2.8	11.1	11.1	1.2	0.0	4.5	1.4	0.0	2.5
Cycle Q Clear(g_c), s	19.4	26.5	26.6	29.4	11.1	11.1	1.2	0.0	4.5	1.4	0.0	2.5
Prop In Lane	1.00		0.06	1.00		0.05	1.00		0.22	1.00		0.17
Lane Grp Cap(c), veh/h	296	691	719	119	691	720	80	0	702	91	0	720
V/C Ratio(X)	0.39	0.93	0.93	0.12	0.43	0.43	0.30	0.00	0.20	0.32	0.00	0.27
Avail Cap(c_a), veh/h	312	728	757	128	728	758	189	0	702	197	0	720
HCM Platoon Ratio	2.00	2.00	2.00	1.00	1.00	1.00	1.00	1.00	1.00	2.00	2.00	2.00
Upstream Filter(I)	0.59	0.59	0.59	1.00	1.00	1.00	1.00	0.00	1.00	0.99	0.00	0.99
Uniform Delay (d), s/veh	11.8	8.9	8.9	38.2	20.1	20.1	41.6	0.0	18.0	38.9	0.0	5.8
Incr Delay (d2), s/veh	0.7	12.7	12.4	0.6	0.6	0.6	2.1	0.0	0.6	1.9	0.0	0.9
Initial Q Delay(d3),s/veh	0.0	0.0	0.0	0.0	0.0	0.0	0.0	0.0	0.0	0.0	0.0	0.0
%ile BackOfQ(50%),veh/ln	1.8	14.2	14.8	0.3	5.5	5.7	0.6	0.0	2.4	0.7	0.0	1.4
LnGrp Delay(d),s/veh	12.5	21.6	21.4	38.8	20.7	20.7	43.7	0.0	18.7	40.8	0.0	6.7
LnGrp LOS	B	C	C	D	C	C	D		B	D		A
Approach Vol, veh/h		1430			623			161			225	
Approach Delay, s/veh		20.8			21.1			22.4			11.1	
Approach LOS		C			C			C			B	

Timer	1	2	3	4	5	6	7	8
Assigned Phs	1	2		4	5	6		8
Phs Duration (G+Y+Rc), s	8.6	41.2		40.1	8.1	41.8		40.1
Change Period (Y+Rc), s	4.0	6.0		5.0	4.0	6.0		5.0
Max Green Setting (Gmax), s	10.6	28.0		37.0	9.6	28.4		37.0
Max Q Clear Time (g_c+I1), s	3.4	6.5		28.6	3.2	4.5		31.4
Green Ext Time (p_c), s	0.0	1.0		6.5	0.0	1.5		2.4

Intersection Summary	
HCM 2010 Ctrl Delay	20.1
HCM 2010 LOS	C

Movement	EBL	EBT	EBR	WBL	WBT	WBR	NBL	NBT	NBR	SBL	SBT	SBR
Lane Configurations												
Traffic Volume (veh/h)	8	371	72	26	307	17	9	27	11	11	77	13
Future Volume (veh/h)	8	371	72	26	307	17	9	27	11	11	77	13
Number	7	4	14	3	8	18	5	2	12	1	6	16
Initial Q (Qb), veh	0	0	0	0	0	0	0	0	0	0	0	0
Ped-Bike Adj(A_pbT)	1.00		1.00	1.00		1.00	1.00		1.00	1.00		1.00
Parking Bus, Adj	1.00	1.00	1.00	1.00	1.00	1.00	1.00	1.00	1.00	1.00	1.00	1.00
Adj Sat Flow, veh/h/ln	1900	1863	1900	1900	1863	1900	1900	1863	1900	1900	1863	1900
Adj Flow Rate, veh/h	9	403	78	28	334	18	10	29	12	12	84	14
Adj No. of Lanes	0	2	0	0	2	0	0	2	0	0	2	0
Peak Hour Factor	0.92	0.92	0.92	0.92	0.92	0.92	0.92	0.92	0.92	0.92	0.92	0.92
Percent Heavy Veh, %	2	2	2	2	2	2	2	2	2	2	2	2
Cap, veh/h	82	1211	229	135	1306	69	282	736	299	173	1038	166
Arrive On Green	0.42	0.42	0.42	0.42	0.42	0.42	0.38	0.38	0.38	0.38	0.38	0.38
Sat Flow, veh/h	17	2884	546	125	3110	164	482	1936	787	228	2731	438
Grp Volume(v), veh/h	262	0	228	197	0	183	27	0	24	58	0	52
Grp Sat Flow(s),veh/h/ln	1849	0	1599	1732	0	1666	1650	0	1556	1779	0	1618
Q Serve(g_s), s	0.0	0.0	4.8	0.0	0.0	3.6	0.0	0.0	0.5	0.0	0.0	1.0
Cycle Q Clear(g_c), s	4.7	0.0	4.8	3.4	0.0	3.6	0.5	0.0	0.5	1.0	0.0	1.0
Prop In Lane	0.03		0.34	0.14		0.10	0.37		0.51	0.21		0.27
Lane Grp Cap(c), veh/h	851	0	671	810	0	700	725	0	591	763	0	615
V/C Ratio(X)	0.31	0.00	0.34	0.24	0.00	0.26	0.04	0.00	0.04	0.08	0.00	0.08
Avail Cap(c_a), veh/h	851	0	671	810	0	700	725	0	591	763	0	615
HCM Platoon Ratio	1.00	1.00	1.00	1.00	1.00	1.00	1.00	1.00	1.00	1.00	1.00	1.00
Upstream Filter(I)	1.00	0.00	1.00	0.89	0.00	0.89	1.00	0.00	1.00	1.00	0.00	1.00
Uniform Delay (d), s/veh	9.8	0.0	9.8	9.4	0.0	9.4	9.8	0.0	9.8	9.9	0.0	9.9
Incr Delay (d2), s/veh	0.2	0.0	0.3	0.1	0.0	0.2	0.1	0.0	0.1	0.2	0.0	0.3
Initial Q Delay(d3),s/veh	0.0	0.0	0.0	0.0	0.0	0.0	0.0	0.0	0.0	0.0	0.0	0.0
%ile BackOfQ(50%),veh/ln	2.4	0.0	2.1	1.8	0.0	1.7	0.3	0.0	0.2	0.5	0.0	0.5
LnGrp Delay(d),s/veh	10.0	0.0	10.1	9.5	0.0	9.6	9.9	0.0	9.9	10.1	0.0	10.2
LnGrp LOS	A		B	A		A	A		A	B		B
Approach Vol, veh/h		490			380			51			110	
Approach Delay, s/veh		10.0			9.6			9.9			10.2	
Approach LOS		B			A			A			B	

Timer	1	2	3	4	5	6	7	8
Assigned Phs		2		4		6		8
Phs Duration (G+Y+Rc), s		24.0		26.0		24.0		26.0
Change Period (Y+Rc), s		5.0		5.0		5.0		5.0
Max Green Setting (Gmax), s		19.0		21.0		19.0		21.0
Max Q Clear Time (g_c+I1), s		2.5		6.8		3.0		5.6
Green Ext Time (p_c), s		0.2		2.5		0.4		2.0

Intersection Summary	
HCM 2010 Ctrl Delay	9.9
HCM 2010 LOS	A

Intersection	
Int Delay, s/veh	3.1

Movement	EBL	EBT	EBR	WBL	WBT	WBR	NBL	NBT	NBR	SBL	SBT	SBR
Lane Configurations												
Traffic Vol, veh/h	4	10	25	31	10	6	11	57	10	5	159	3
Future Vol, veh/h	4	10	25	31	10	6	11	57	10	5	159	3
Conflicting Peds, #/hr	0	0	0	0	0	0	0	0	0	0	0	0
Sign Control	Stop	Stop	Stop	Stop	Stop	Stop	Free	Free	Free	Free	Free	Free
RT Channelized	-	-	None	-	-	None	-	-	None	-	-	None
Storage Length	-	-	-	-	-	-	-	-	0	-	-	0
Veh in Median Storage, #	-	0	-	-	0	-	-	0	-	-	0	-
Grade, %	-	0	-	-	0	-	-	0	-	-	0	-
Peak Hour Factor	92	92	92	92	92	92	92	92	92	92	92	92
Heavy Vehicles, %	2	2	2	2	2	2	2	2	2	2	2	2
Mvmt Flow	4	11	27	34	11	7	12	62	11	5	173	3

Major/Minor	Minor2			Minor1			Major1			Major2		
Conflicting Flow All	284	280	173	290	272	62	176	0	0	73	0	0
Stage 1	183	183	-	86	86	-	-	-	-	-	-	-
Stage 2	101	97	-	204	186	-	-	-	-	-	-	-
Critical Hdwy	7.12	6.52	6.22	7.12	6.52	6.22	4.12	-	-	4.12	-	-
Critical Hdwy Stg 1	6.12	5.52	-	6.12	5.52	-	-	-	-	-	-	-
Critical Hdwy Stg 2	6.12	5.52	-	6.12	5.52	-	-	-	-	-	-	-
Follow-up Hdwy	3.518	4.018	3.318	3.518	4.018	3.318	2.218	-	-	2.218	-	-
Pot Cap-1 Maneuver	668	628	871	662	635	1003	1400	-	-	1527	-	-
Stage 1	819	748	-	922	824	-	-	-	-	-	-	-
Stage 2	905	815	-	798	746	-	-	-	-	-	-	-
Platoon blocked, %								-	-		-	-
Mov Cap-1 Maneuver	649	620	871	626	627	1003	1400	-	-	1527	-	-
Mov Cap-2 Maneuver	649	620	-	626	627	-	-	-	-	-	-	-
Stage 1	812	745	-	914	817	-	-	-	-	-	-	-
Stage 2	879	808	-	759	743	-	-	-	-	-	-	-

Approach	EB	WB	NB	SB
HCM Control Delay, s	10	10.9	1.1	0.2
HCM LOS	B	B		

Minor Lane/Major Mvmt	NBL	NBT	NBR	EBLn1	WBLn1	SBL	SBT	SBR
Capacity (veh/h)	1400	-	-	765	658	1527	-	-
HCM Lane V/C Ratio	0.009	-	-	0.055	0.078	0.004	-	-
HCM Control Delay (s)	7.6	0	-	10	10.9	7.4	0	-
HCM Lane LOS	A	A	-	B	B	A	A	-
HCM 95th %tile Q(veh)	0	-	-	0.2	0.3	0	-	-

Movement	EBL	EBT	EBR	WBL	WBT	WBR	NBL	NBT	NBR	SBL	SBT	SBR
Lane Configurations												
Traffic Volume (veh/h)	23	87	20	12	47	13	16	57	41	32	58	56
Future Volume (veh/h)	23	87	20	12	47	13	16	57	41	32	58	56
Number	7	4	14	3	8	18	5	2	12	1	6	16
Initial Q (Qb), veh	0	0	0	0	0	0	0	0	0	0	0	0
Ped-Bike Adj(A_pbT)	1.00		1.00	1.00		1.00	1.00		1.00	1.00		1.00
Parking Bus, Adj	1.00	1.00	1.00	1.00	1.00	1.00	1.00	1.00	1.00	1.00	1.00	1.00
Adj Sat Flow, veh/h/ln	1863	1863	1863	1863	1863	1863	1900	1863	1900	1900	1863	1900
Adj Flow Rate, veh/h	25	95	22	13	51	14	17	62	45	35	63	61
Adj No. of Lanes	1	1	1	1	1	1	0	2	0	0	2	0
Peak Hour Factor	0.92	0.92	0.92	0.92	0.92	0.92	0.92	0.92	0.92	0.92	0.92	0.92
Percent Heavy Veh, %	2	2	2	2	2	2	2	2	2	2	2	2
Cap, veh/h	709	820	697	665	820	697	206	662	442	309	502	466
Arrive On Green	0.44	0.44	0.44	0.44	0.44	0.44	0.38	0.38	0.38	0.38	0.38	0.38
Sat Flow, veh/h	1331	1863	1583	1270	1863	1583	303	1743	1162	546	1320	1227
Grp Volume(v), veh/h	25	95	22	13	51	14	66	0	58	85	0	74
Grp Sat Flow(s),veh/h/ln	1331	1863	1583	1270	1863	1583	1718	0	1490	1615	0	1479
Q Serve(g_s), s	0.6	1.5	0.4	0.3	0.8	0.2	0.0	0.0	1.2	0.0	0.0	1.6
Cycle Q Clear(g_c), s	1.3	1.5	0.4	1.8	0.8	0.2	1.1	0.0	1.2	1.5	0.0	1.6
Prop In Lane	1.00		1.00	1.00		1.00	0.26		0.78	0.41		0.83
Lane Grp Cap(c), veh/h	709	820	697	665	820	697	743	0	566	715	0	562
V/C Ratio(X)	0.04	0.12	0.03	0.02	0.06	0.02	0.09	0.00	0.10	0.12	0.00	0.13
Avail Cap(c_a), veh/h	709	820	697	665	820	697	743	0	566	715	0	562
HCM Platoon Ratio	1.00	1.00	1.00	1.00	1.00	1.00	1.00	1.00	1.00	1.00	1.00	1.00
Upstream Filter(I)	1.00	1.00	1.00	0.99	0.99	0.99	0.99	0.00	0.99	1.00	0.00	1.00
Uniform Delay (d), s/veh	8.4	8.3	8.0	8.8	8.1	7.9	10.0	0.0	10.0	10.1	0.0	10.1
Incr Delay (d2), s/veh	0.0	0.0	0.0	0.0	0.0	0.0	0.2	0.0	0.4	0.3	0.0	0.5
Initial Q Delay(d3),s/veh	0.0	0.0	0.0	0.0	0.0	0.0	0.0	0.0	0.0	0.0	0.0	0.0
%ile BackOfQ(50%),veh/ln	0.2	0.8	0.2	0.1	0.4	0.1	0.6	0.0	0.6	0.8	0.0	0.7
LnGrp Delay(d),s/veh	8.5	8.3	8.0	8.8	8.1	7.9	10.2	0.0	10.4	10.4	0.0	10.6
LnGrp LOS	A	A	A	A	A	A	B		B	B		B
Approach Vol, veh/h		142			78			124			159	
Approach Delay, s/veh		8.3			8.2			10.3			10.5	
Approach LOS		A			A			B			B	

Timer	1	2	3	4	5	6	7	8
Assigned Phs		2		4		6		8
Phs Duration (G+Y+Rc), s		23.5		26.5		23.5		26.5
Change Period (Y+Rc), s		4.5		4.5		4.5		4.5
Max Green Setting (Gmax), s		19.0		22.0		19.0		22.0
Max Q Clear Time (g_c+I1), s		3.2		3.5		3.6		3.8
Green Ext Time (p_c), s		0.3		0.3		0.5		0.1

Intersection Summary	
HCM 2010 Ctrl Delay	9.4
HCM 2010 LOS	A

Movement	EBL	EBT	EBR	WBL	WBT	WBR	NBL	NBT	NBR	SBL	SBT	SBR
Lane Configurations												
Traffic Volume (veh/h)	69	1326	7	7	573	22	5	19	6	13	25	20
Future Volume (veh/h)	69	1326	7	7	573	22	5	19	6	13	25	20
Number	7	4	14	3	8	18	5	2	12	1	6	16
Initial Q (Qb), veh	0	0	0	0	0	0	0	0	0	0	0	0
Ped-Bike Adj(A_pbT)	1.00		1.00	1.00		1.00	1.00		1.00	1.00		1.00
Parking Bus, Adj	1.00	1.00	1.00	1.00	1.00	1.00	1.00	1.00	1.00	1.00	1.00	1.00
Adj Sat Flow, veh/h/ln	1863	1863	1900	1863	1863	1900	1900	1863	1900	1900	1863	1900
Adj Flow Rate, veh/h	75	1441	8	8	623	24	5	21	7	14	27	22
Adj No. of Lanes	1	2	0	1	2	0	0	2	0	0	2	0
Peak Hour Factor	0.92	0.92	0.92	0.92	0.92	0.92	0.92	0.92	0.92	0.92	0.92	0.92
Percent Heavy Veh, %	2	2	2	2	2	2	2	2	2	2	2	2
Cap, veh/h	376	1768	10	135	1703	66	217	859	282	306	557	445
Arrive On Green	0.49	0.49	0.49	0.49	0.49	0.49	0.40	0.40	0.40	0.40	0.40	0.40
Sat Flow, veh/h	781	3609	20	366	3475	134	415	2154	706	626	1397	1116
Grp Volume(v), veh/h	75	706	743	8	317	330	17	0	16	33	0	30
Grp Sat Flow(s),veh/h/ln	781	1770	1859	366	1770	1839	1705	0	1570	1642	0	1498
Q Serve(g_s), s	5.9	30.5	30.5	1.7	10.0	10.0	0.0	0.0	0.5	0.0	0.0	1.1
Cycle Q Clear(g_c), s	16.0	30.5	30.5	32.2	10.0	10.0	0.5	0.0	0.5	1.0	0.0	1.1
Prop In Lane	1.00		0.01	1.00		0.07	0.29		0.45	0.42		0.75
Lane Grp Cap(c), veh/h	376	867	911	135	867	901	732	0	626	711	0	598
V/C Ratio(X)	0.20	0.81	0.82	0.06	0.37	0.37	0.02	0.00	0.02	0.05	0.00	0.05
Avail Cap(c_a), veh/h	461	1062	1116	175	1062	1103	732	0	626	711	0	598
HCM Platoon Ratio	1.00	1.00	1.00	1.00	1.00	1.00	1.00	1.00	1.00	1.00	1.00	1.00
Upstream Filter(I)	1.00	1.00	1.00	0.95	0.95	0.95	1.00	0.00	1.00	1.00	0.00	1.00
Uniform Delay (d), s/veh	19.2	19.5	19.5	33.2	14.3	14.3	16.4	0.0	16.4	16.6	0.0	16.6
Incr Delay (d2), s/veh	0.3	4.1	4.0	0.2	0.2	0.2	0.1	0.0	0.1	0.1	0.0	0.2
Initial Q Delay(d3),s/veh	0.0	0.0	0.0	0.0	0.0	0.0	0.0	0.0	0.0	0.0	0.0	0.0
%ile BackOfQ(50%),veh/ln	1.3	15.7	16.5	0.2	4.9	5.1	0.3	0.0	0.2	0.5	0.0	0.5
LnGrp Delay(d),s/veh	19.5	23.6	23.4	33.3	14.5	14.5	16.5	0.0	16.5	16.7	0.0	16.7
LnGrp LOS	B	C	C	C	B	B	B		B	B		B
Approach Vol, veh/h		1524			655			33			63	
Approach Delay, s/veh		23.3			14.7			16.5			16.7	
Approach LOS		C			B			B			B	

Timer	1	2	3	4	5	6	7	8
Assigned Phs		2		4		6		8
Phs Duration (G+Y+Rc), s		40.9		49.1		40.9		49.1
Change Period (Y+Rc), s		5.0		5.0		5.0		5.0
Max Green Setting (Gmax), s		26.0		54.0		26.0		54.0
Max Q Clear Time (g_c+I1), s		2.5		32.5		3.1		34.2
Green Ext Time (p_c), s		0.1		11.6		0.3		4.1

Intersection Summary	
HCM 2010 Ctrl Delay	20.6
HCM 2010 LOS	C

HCM 2010 Signalized Intersection Summary
1: E Street & 9th Street

08-14-2024

Movement	EBL	EBT	EBR	WBL	WBT	WBR	NBL	NBT	NBR	SBL	SBT	SBR
Lane Configurations												
Traffic Volume (veh/h)	39	350	24	31	421	57	32	265	41	41	181	30
Future Volume (veh/h)	39	350	24	31	421	57	32	265	41	41	181	30
Number	7	4	14	3	8	18	5	2	12	1	6	16
Initial Q (Qb), veh	0	0	0	0	0	0	0	0	0	0	0	0
Ped-Bike Adj(A_pbT)	1.00		1.00	1.00		1.00	1.00		1.00	1.00		1.00
Parking Bus, Adj	1.00	1.00	1.00	1.00	1.00	1.00	1.00	1.00	1.00	1.00	1.00	1.00
Adj Sat Flow, veh/h/ln	1569	1569	1600	1569	1569	1600	1569	1569	1600	1569	1569	1600
Adj Flow Rate, veh/h	42	380	26	34	458	62	35	288	45	45	197	33
Adj No. of Lanes	1	2	0	1	2	0	1	1	0	1	1	0
Peak Hour Factor	0.92	0.92	0.92	0.92	0.92	0.92	0.92	0.92	0.92	0.92	0.92	0.92
Percent Heavy Veh, %	2	2	2	2	2	2	2	2	2	2	2	2
Cap, veh/h	299	787	54	349	763	103	133	440	69	149	450	75
Arrive On Green	0.08	0.28	0.28	0.09	0.29	0.29	0.18	0.66	0.66	0.10	0.34	0.34
Sat Flow, veh/h	1494	2832	193	1494	2640	356	1494	1325	207	1494	1310	220
Grp Volume(v), veh/h	42	199	207	34	258	262	35	0	333	45	0	230
Grp Sat Flow(s),veh/h/ln	1494	1490	1535	1494	1490	1506	1494	0	1532	1494	0	1530
Q Serve(g_s), s	1.7	10.0	10.1	1.3	13.4	13.5	1.8	0.0	11.6	2.5	0.0	10.5
Cycle Q Clear(g_c), s	1.7	10.0	10.1	1.3	13.4	13.5	1.8	0.0	11.6	2.5	0.0	10.5
Prop In Lane	1.00		0.13	1.00		0.24	1.00		0.14	1.00		0.14
Lane Grp Cap(c), veh/h	299	414	426	349	431	435	133	0	509	149	0	525
V/C Ratio(X)	0.14	0.48	0.48	0.10	0.60	0.60	0.26	0.00	0.65	0.30	0.00	0.44
Avail Cap(c_a), veh/h	299	414	426	349	431	435	133	0	509	149	0	525
HCM Platoon Ratio	1.00	1.00	1.00	1.00	1.00	1.00	2.00	2.00	2.00	1.00	1.00	1.00
Upstream Filter(I)	0.95	0.95	0.95	1.00	1.00	1.00	0.95	0.00	0.95	1.00	0.00	1.00
Uniform Delay (d), s/veh	20.2	27.1	27.1	19.1	27.5	27.6	34.5	0.0	12.0	37.6	0.0	22.8
Incr Delay (d2), s/veh	0.9	3.8	3.7	0.6	6.0	6.1	4.5	0.0	6.1	5.1	0.0	2.6
Initial Q Delay(d3),s/veh	0.0	0.0	0.0	0.0	0.0	0.0	0.0	0.0	0.0	0.0	0.0	0.0
%ile BackOfQ(50%),veh/ln	0.8	4.5	4.7	0.6	6.2	6.4	0.9	0.0	5.5	1.2	0.0	4.8
LnGrp Delay(d),s/veh	21.1	30.9	30.8	19.6	33.5	33.6	39.0	0.0	18.1	42.7	0.0	25.5
LnGrp LOS	C	C	C	B	C	C	D		B	D		C
Approach Vol, veh/h		448			554			368			275	
Approach Delay, s/veh		29.9			32.7			20.1			28.3	
Approach LOS		C			C			C			C	

Timer	1	2	3	4	5	6	7	8
Assigned Phs	1	2	3	4	5	6	7	8
Phs Duration (G+Y+Rc), s	13.0	35.0	12.0	30.0	12.0	36.0	11.0	31.0
Change Period (Y+Rc), s	4.0	5.1	4.0	5.0	4.0	5.1	4.0	5.0
Max Green Setting (Gmax), s	9.0	29.9	8.0	25.0	8.0	30.9	7.0	26.0
Max Q Clear Time (g_c+I1), s	4.5	13.6	3.3	12.1	3.8	12.5	3.7	15.5
Green Ext Time (p_c), s	0.0	1.8	0.0	1.9	0.0	1.2	0.0	2.3

Intersection Summary	
HCM 2010 Ctrl Delay	28.4
HCM 2010 LOS	C

Movement	EBL	EBT	EBR	WBL	WBT	WBR	NBL	NBT	NBR	SBL	SBT	SBR
Lane Configurations												
Traffic Volume (veh/h)	19	27	12	10	25	15	31	311	15	5	231	9
Future Volume (veh/h)	19	27	12	10	25	15	31	311	15	5	231	9
Number	7	4	14	3	8	18	5	2	12	1	6	16
Initial Q (Qb), veh	0	0	0	0	0	0	0	0	0	0	0	0
Ped-Bike Adj(A_pbT)	1.00		1.00	1.00		1.00	1.00		1.00	1.00		1.00
Parking Bus, Adj	1.00	1.00	1.00	1.00	1.00	1.00	1.00	1.00	1.00	1.00	1.00	1.00
Adj Sat Flow, veh/h/ln	1600	1569	1600	1600	1569	1600	1569	1569	1600	1569	1569	1600
Adj Flow Rate, veh/h	21	29	13	11	27	16	34	338	16	5	251	10
Adj No. of Lanes	0	1	0	0	1	0	1	1	0	1	1	0
Peak Hour Factor	0.92	0.92	0.92	0.92	0.92	0.92	0.92	0.92	0.92	0.92	0.92	0.92
Percent Heavy Veh, %	2	2	2	2	2	2	2	2	2	2	2	2
Cap, veh/h	79	62	23	62	66	33	133	997	47	149	1022	41
Arrive On Green	0.08	0.08	0.08	0.08	0.08	0.08	0.18	1.00	1.00	0.20	1.00	1.00
Sat Flow, veh/h	336	798	295	175	846	430	1494	1486	70	1494	1498	60
Grp Volume(v), veh/h	63	0	0	54	0	0	34	0	354	5	0	261
Grp Sat Flow(s),veh/h/ln	1428	0	0	1450	0	0	1494	0	1556	1494	0	1558
Q Serve(g_s), s	0.5	0.0	0.0	0.0	0.0	0.0	1.8	0.0	0.0	0.2	0.0	0.0
Cycle Q Clear(g_c), s	3.6	0.0	0.0	3.1	0.0	0.0	1.8	0.0	0.0	0.2	0.0	0.0
Prop In Lane	0.33		0.21	0.20		0.30	1.00		0.05	1.00		0.04
Lane Grp Cap(c), veh/h	164	0	0	161	0	0	133	0	1044	149	0	1063
V/C Ratio(X)	0.38	0.00	0.00	0.34	0.00	0.00	0.26	0.00	0.34	0.03	0.00	0.25
Avail Cap(c_a), veh/h	471	0	0	476	0	0	166	0	1044	166	0	1063
HCM Platoon Ratio	1.00	1.00	1.00	1.00	1.00	1.00	2.00	2.00	2.00	2.00	2.00	2.00
Upstream Filter(I)	1.00	0.00	0.00	1.00	0.00	0.00	0.97	0.00	0.97	0.93	0.00	0.93
Uniform Delay (d), s/veh	39.9	0.0	0.0	39.7	0.0	0.0	34.4	0.0	0.0	32.5	0.0	0.0
Incr Delay (d2), s/veh	1.5	0.0	0.0	1.2	0.0	0.0	1.0	0.0	0.9	0.1	0.0	0.5
Initial Q Delay(d3),s/veh	0.0	0.0	0.0	0.0	0.0	0.0	0.0	0.0	0.0	0.0	0.0	0.0
%ile BackOfQ(50%),veh/ln	1.6	0.0	0.0	1.3	0.0	0.0	0.8	0.0	0.2	0.1	0.0	0.2
LnGrp Delay(d),s/veh	41.4	0.0	0.0	40.9	0.0	0.0	35.4	0.0	0.9	32.6	0.0	0.5
LnGrp LOS	D			D			D		A	C		A
Approach Vol, veh/h		63			54			388			266	
Approach Delay, s/veh		41.4			40.9			3.9			1.1	
Approach LOS		D			D			A			A	

Timer	1	2	3	4	5	6	7	8
Assigned Phs	1	2		4	5	6		8
Phs Duration (G+Y+Rc), s	13.0	65.4		11.6	12.0	66.4		11.6
Change Period (Y+Rc), s	4.0	5.0		4.6	4.0	5.0		4.6
Max Green Setting (Gmax), s	10.0	39.0		27.4	10.0	39.0		27.4
Max Q Clear Time (g_c+I1), s	2.2	2.0		5.6	3.8	2.0		5.1
Green Ext Time (p_c), s	0.0	2.4		0.2	0.0	1.7		0.2

Intersection Summary	
HCM 2010 Ctrl Delay	8.6
HCM 2010 LOS	A

Movement	EBL	EBT	EBR	WBL	WBT	WBR	NBL	NBT	NBR	SBL	SBT	SBR
Lane Configurations												
Traffic Volume (veh/h)	15	52	9	45	163	13	21	297	21	15	254	26
Future Volume (veh/h)	15	52	9	45	163	13	21	297	21	15	254	26
Number	7	4	14	3	8	18	5	2	12	1	6	16
Initial Q (Qb), veh	0	0	0	0	0	0	0	0	0	0	0	0
Ped-Bike Adj(A_pbT)	1.00		1.00	1.00		1.00	1.00		1.00	1.00		1.00
Parking Bus, Adj	1.00	1.00	1.00	1.00	1.00	1.00	1.00	1.00	1.00	1.00	1.00	1.00
Adj Sat Flow, veh/h/ln	1863	1863	1900	1863	1863	1900	1863	1863	1900	1863	1863	1900
Adj Flow Rate, veh/h	16	57	10	49	177	14	23	323	23	16	276	28
Adj No. of Lanes	1	2	0	1	2	0	1	1	0	1	1	0
Peak Hour Factor	0.92	0.92	0.92	0.92	0.92	0.92	0.92	0.92	0.92	0.92	0.92	0.92
Percent Heavy Veh, %	2	2	2	2	2	2	2	2	2	2	2	2
Cap, veh/h	126	273	47	176	301	24	158	1124	80	177	1107	112
Arrive On Green	0.09	0.09	0.09	0.09	0.09	0.09	0.18	1.00	1.00	0.20	1.00	1.00
Sat Flow, veh/h	1187	3024	517	1329	3326	261	1774	1719	122	1774	1664	169
Grp Volume(v), veh/h	16	33	34	49	93	98	23	0	346	16	0	304
Grp Sat Flow(s),veh/h/ln	1187	1770	1771	1329	1770	1817	1774	0	1841	1774	0	1833
Q Serve(g_s), s	1.2	1.5	1.6	3.2	4.6	4.6	1.0	0.0	0.0	0.7	0.0	0.0
Cycle Q Clear(g_c), s	5.8	1.5	1.6	4.8	4.6	4.6	1.0	0.0	0.0	0.7	0.0	0.0
Prop In Lane	1.00		0.29	1.00		0.14	1.00		0.07	1.00		0.09
Lane Grp Cap(c), veh/h	126	160	160	176	160	164	158	0	1204	177	0	1219
V/C Ratio(X)	0.13	0.20	0.21	0.28	0.58	0.59	0.15	0.00	0.29	0.09	0.00	0.25
Avail Cap(c_a), veh/h	388	551	551	470	551	565	217	0	1204	217	0	1219
HCM Platoon Ratio	1.00	1.00	1.00	1.00	1.00	1.00	2.00	2.00	2.00	2.00	2.00	2.00
Upstream Filter(I)	1.00	1.00	1.00	1.00	1.00	1.00	0.88	0.00	0.88	0.98	0.00	0.98
Uniform Delay (d), s/veh	42.1	37.9	38.0	40.2	39.3	39.3	34.1	0.0	0.0	32.7	0.0	0.0
Incr Delay (d2), s/veh	0.4	0.6	0.7	0.8	3.4	3.4	0.4	0.0	0.5	0.2	0.0	0.5
Initial Q Delay(d3),s/veh	0.0	0.0	0.0	0.0	0.0	0.0	0.0	0.0	0.0	0.0	0.0	0.0
%ile BackOfQ(50%),veh/ln	0.4	0.8	0.8	1.2	2.4	2.5	0.5	0.0	0.2	0.3	0.0	0.2
LnGrp Delay(d),s/veh	42.6	38.6	38.6	41.0	42.7	42.7	34.5	0.0	0.5	32.9	0.0	0.5
LnGrp LOS	D	D	D	D	D	D	C		A	C		A
Approach Vol, veh/h		83			240			369			320	
Approach Delay, s/veh		39.4			42.4			2.6			2.1	
Approach LOS		D			D			A			A	

Timer	1	2	3	4	5	6	7	8
Assigned Phs	1	2		4	5	6		8
Phs Duration (G+Y+Rc), s	13.0	63.9		13.1	12.0	64.9		13.1
Change Period (Y+Rc), s	4.0	5.0		5.0	4.0	5.0		5.0
Max Green Setting (Gmax), s	11.0	37.0		28.0	11.0	37.0		28.0
Max Q Clear Time (g_c+I1), s	2.7	2.0		7.8	3.0	2.0		6.8
Green Ext Time (p_c), s	0.0	2.3		0.3	0.0	2.0		1.1

Intersection Summary	
HCM 2010 Ctrl Delay	14.9
HCM 2010 LOS	B

Movement	EBL	EBT	EBR	WBL	WBT	WBR	NBL	NBT	NBR	SBL	SBT	SBR
Lane Configurations												
Traffic Volume (veh/h)	30	746	39	32	939	35	74	279	49	43	173	57
Future Volume (veh/h)	30	746	39	32	939	35	74	279	49	43	173	57
Number	7	4	14	3	8	18	5	2	12	1	6	16
Initial Q (Qb), veh	0	0	0	0	0	0	0	0	0	0	0	0
Ped-Bike Adj(A_pbT)	1.00		1.00	1.00		1.00	1.00		1.00	1.00		1.00
Parking Bus, Adj	1.00	1.00	1.00	1.00	1.00	1.00	1.00	1.00	1.00	1.00	1.00	1.00
Adj Sat Flow, veh/h/ln	1863	1863	1900	1863	1863	1900	1863	1863	1900	1863	1863	1900
Adj Flow Rate, veh/h	33	811	42	35	1021	38	80	303	53	47	188	62
Adj No. of Lanes	1	2	0	1	2	0	1	1	0	1	1	0
Peak Hour Factor	0.92	0.92	0.92	0.92	0.92	0.92	0.92	0.92	0.92	0.92	0.92	0.92
Percent Heavy Veh, %	2	2	2	2	2	2	2	2	2	2	2	2
Cap, veh/h	137	1265	66	242	1286	48	153	610	107	123	506	167
Arrive On Green	0.74	0.74	0.74	0.37	0.37	0.37	0.09	0.39	0.39	0.14	0.75	0.75
Sat Flow, veh/h	531	3424	177	644	3480	130	1774	1545	270	1774	1342	443
Grp Volume(v), veh/h	33	419	434	35	519	540	80	0	356	47	0	250
Grp Sat Flow(s),veh/h/ln	531	1770	1831	644	1770	1840	1774	0	1815	1774	0	1785
Q Serve(g_s), s	5.0	10.6	10.6	3.9	23.6	23.6	3.9	0.0	13.3	2.2	0.0	4.3
Cycle Q Clear(g_c), s	28.6	10.6	10.6	14.4	23.6	23.6	3.9	0.0	13.3	2.2	0.0	4.3
Prop In Lane	1.00		0.10	1.00		0.07	1.00		0.15	1.00		0.25
Lane Grp Cap(c), veh/h	137	654	677	242	654	680	153	0	716	123	0	673
V/C Ratio(X)	0.24	0.64	0.64	0.14	0.79	0.79	0.52	0.00	0.50	0.38	0.00	0.37
Avail Cap(c_a), veh/h	147	688	712	255	688	716	189	0	716	197	0	673
HCM Platoon Ratio	2.00	2.00	2.00	1.00	1.00	1.00	1.00	1.00	1.00	2.00	2.00	2.00
Upstream Filter(I)	0.83	0.83	0.83	1.00	1.00	1.00	1.00	0.00	1.00	0.97	0.00	0.97
Uniform Delay (d), s/veh	21.7	8.8	8.8	26.6	25.3	25.3	39.3	0.0	20.5	37.0	0.0	7.4
Incr Delay (d2), s/veh	1.1	1.8	1.8	0.4	6.5	6.3	2.7	0.0	2.5	1.9	0.0	1.5
Initial Q Delay(d3),s/veh	0.0	0.0	0.0	0.0	0.0	0.0	0.0	0.0	0.0	0.0	0.0	0.0
%ile BackOfQ(50%),veh/ln	0.8	5.2	5.4	0.7	12.6	13.0	2.0	0.0	7.1	1.1	0.0	2.4
LnGrp Delay(d),s/veh	22.8	10.6	10.6	27.0	31.9	31.6	42.1	0.0	23.0	38.9	0.0	8.9
LnGrp LOS	C	B	B	C	C	C	D		C	D		A
Approach Vol, veh/h		886			1094			436			297	
Approach Delay, s/veh		11.1			31.6			26.5			13.7	
Approach LOS		B			C			C			B	

Timer	1	2	3	4	5	6	7	8
Assigned Phs	1	2		4	5	6		8
Phs Duration (G+Y+Rc), s	10.2	41.5		38.3	11.8	40.0		38.3
Change Period (Y+Rc), s	4.0	6.0		5.0	4.0	6.0		5.0
Max Green Setting (Gmax), s	10.6	30.0		35.0	9.6	30.4		35.0
Max Q Clear Time (g_c+I1), s	14.2	15.3		30.6	5.9	6.3		25.6
Green Ext Time (p_c), s	0.0	2.6		2.7	0.0	2.1		5.9

Intersection Summary	
HCM 2010 Ctrl Delay	22.1
HCM 2010 LOS	C

Movement	EBL	EBT	EBR	WBL	WBT	WBR	NBL	NBT	NBR	SBL	SBT	SBR
Lane Configurations												
Traffic Volume (veh/h)	13	387	32	10	471	20	36	67	15	10	31	22
Future Volume (veh/h)	13	387	32	10	471	20	36	67	15	10	31	22
Number	7	4	14	3	8	18	5	2	12	1	6	16
Initial Q (Qb), veh	0	0	0	0	0	0	0	0	0	0	0	0
Ped-Bike Adj(A_pbT)	1.00		1.00	1.00		1.00	1.00		1.00	1.00		1.00
Parking Bus, Adj	1.00	1.00	1.00	1.00	1.00	1.00	1.00	1.00	1.00	1.00	1.00	1.00
Adj Sat Flow, veh/h/ln	1900	1863	1900	1900	1863	1900	1900	1863	1900	1900	1863	1900
Adj Flow Rate, veh/h	14	421	35	11	512	22	39	73	16	11	34	24
Adj No. of Lanes	0	2	0	0	2	0	0	2	0	0	2	0
Peak Hour Factor	0.92	0.92	0.92	0.92	0.92	0.92	0.92	0.92	0.92	0.92	0.92	0.92
Percent Heavy Veh, %	2	2	2	2	2	2	2	2	2	2	2	2
Cap, veh/h	90	1336	109	83	1407	60	415	736	166	236	648	425
Arrive On Green	0.42	0.42	0.42	0.42	0.42	0.42	0.38	0.38	0.38	0.38	0.38	0.38
Sat Flow, veh/h	33	3182	259	21	3349	142	796	1937	437	375	1706	1119
Grp Volume(v), veh/h	247	0	223	286	0	259	69	0	59	37	0	32
Grp Sat Flow(s),veh/h/ln	1825	0	1649	1842	0	1670	1552	0	1618	1702	0	1498
Q Serve(g_s), s	0.0	0.0	4.5	0.0	0.0	5.3	0.0	0.0	1.2	0.0	0.0	0.7
Cycle Q Clear(g_c), s	4.4	0.0	4.5	5.3	0.0	5.3	1.2	0.0	1.2	0.6	0.0	0.7
Prop In Lane	0.06		0.16	0.04		0.09	0.57		0.27	0.30		0.75
Lane Grp Cap(c), veh/h	842	0	693	848	0	701	703	0	615	740	0	569
V/C Ratio(X)	0.29	0.00	0.32	0.34	0.00	0.37	0.10	0.00	0.10	0.05	0.00	0.06
Avail Cap(c_a), veh/h	842	0	693	848	0	701	703	0	615	740	0	569
HCM Platoon Ratio	1.00	1.00	1.00	1.00	1.00	1.00	1.00	1.00	1.00	1.00	1.00	1.00
Upstream Filter(I)	1.00	0.00	1.00	0.78	0.00	0.78	1.00	0.00	1.00	1.00	0.00	1.00
Uniform Delay (d), s/veh	9.7	0.0	9.7	9.9	0.0	10.0	10.0	0.0	10.0	9.8	0.0	9.8
Incr Delay (d2), s/veh	0.2	0.0	0.3	0.2	0.0	0.3	0.3	0.0	0.3	0.1	0.0	0.2
Initial Q Delay(d3),s/veh	0.0	0.0	0.0	0.0	0.0	0.0	0.0	0.0	0.0	0.0	0.0	0.0
%ile BackOfQ(50%),veh/ln	2.3	0.0	2.1	2.7	0.0	2.5	0.7	0.0	0.6	0.3	0.0	0.3
LnGrp Delay(d),s/veh	9.9	0.0	10.0	10.1	0.0	10.2	10.3	0.0	10.3	9.9	0.0	10.0
LnGrp LOS	A		A	B		B	B		B	A		B
Approach Vol, veh/h		470			545			128			69	
Approach Delay, s/veh		9.9			10.2			10.3			10.0	
Approach LOS		A			B			B			A	

Timer	1	2	3	4	5	6	7	8
Assigned Phs		2		4		6		8
Phs Duration (G+Y+Rc), s		24.0		26.0		24.0		26.0
Change Period (Y+Rc), s		5.0		5.0		5.0		5.0
Max Green Setting (Gmax), s		19.0		21.0		19.0		21.0
Max Q Clear Time (g_c+I1), s		3.2		6.5		2.7		7.3
Green Ext Time (p_c), s		0.5		2.4		0.2		2.8

Intersection Summary	
HCM 2010 Ctrl Delay	10.1
HCM 2010 LOS	B

Intersection	
Int Delay, s/veh	4.6

Movement	EBL	EBT	EBR	WBL	WBT	WBR	NBL	NBT	NBR	SBL	SBT	SBR
Lane Configurations												
Traffic Vol, veh/h	4	13	8	29	27	28	14	90	6	12	45	12
Future Vol, veh/h	4	13	8	29	27	28	14	90	6	12	45	12
Conflicting Peds, #/hr	0	0	0	0	0	0	0	0	0	0	0	0
Sign Control	Stop	Stop	Stop	Stop	Stop	Stop	Free	Free	Free	Free	Free	Free
RT Channelized	-	-	None	-	-	None	-	-	None	-	-	None
Storage Length	-	-	-	-	-	-	-	-	0	-	-	0
Veh in Median Storage, #	-	0	-	-	0	-	-	0	-	-	0	-
Grade, %	-	0	-	-	0	-	-	0	-	-	0	-
Peak Hour Factor	92	92	92	92	92	92	92	92	92	92	92	92
Heavy Vehicles, %	2	2	2	2	2	2	2	2	2	2	2	2
Mvmt Flow	4	14	9	32	29	30	15	98	7	13	49	13

Major/Minor	Minor2			Minor1			Major1			Major2		
Conflicting Flow All	236	210	49	221	216	98	62	0	0	105	0	0
Stage 1	75	75	-	128	128	-	-	-	-	-	-	-
Stage 2	161	135	-	93	88	-	-	-	-	-	-	-
Critical Hdwy	7.12	6.52	6.22	7.12	6.52	6.22	4.12	-	-	4.12	-	-
Critical Hdwy Stg 1	6.12	5.52	-	6.12	5.52	-	-	-	-	-	-	-
Critical Hdwy Stg 2	6.12	5.52	-	6.12	5.52	-	-	-	-	-	-	-
Follow-up Hdwy	3.518	4.018	3.318	3.518	4.018	3.318	2.218	-	-	2.218	-	-
Pot Cap-1 Maneuver	718	687	1020	735	682	958	1541	-	-	1486	-	-
Stage 1	934	833	-	876	790	-	-	-	-	-	-	-
Stage 2	841	785	-	914	822	-	-	-	-	-	-	-
Platoon blocked, %								-	-		-	-
Mov Cap-1 Maneuver	662	674	1020	707	669	958	1541	-	-	1486	-	-
Mov Cap-2 Maneuver	662	674	-	707	669	-	-	-	-	-	-	-
Stage 1	925	826	-	867	782	-	-	-	-	-	-	-
Stage 2	776	777	-	883	815	-	-	-	-	-	-	-

Approach	EB	WB	NB	SB
HCM Control Delay, s	10	10.4	0.9	1.3
HCM LOS	B	B		

Minor Lane/Major Mvmt	NBL	NBT	NBR	EBLn1	WBLn1	SBL	SBT	SBR
Capacity (veh/h)	1541	-	-	754	759	1486	-	-
HCM Lane V/C Ratio	0.01	-	-	0.036	0.12	0.009	-	-
HCM Control Delay (s)	7.4	0	-	10	10.4	7.4	0	-
HCM Lane LOS	A	A	-	B	B	A	A	-
HCM 95th %tile Q(veh)	0	-	-	0.1	0.4	0	-	-

Movement	EBL	EBT	EBR	WBL	WBT	WBR	NBL	NBT	NBR	SBL	SBT	SBR
Lane Configurations												
Traffic Volume (veh/h)	14	49	14	13	181	15	32	63	15	14	70	32
Future Volume (veh/h)	14	49	14	13	181	15	32	63	15	14	70	32
Number	7	4	14	3	8	18	5	2	12	1	6	16
Initial Q (Qb), veh	0	0	0	0	0	0	0	0	0	0	0	0
Ped-Bike Adj(A_pbT)	1.00		1.00	1.00		1.00	1.00		1.00	1.00		1.00
Parking Bus, Adj	1.00	1.00	1.00	1.00	1.00	1.00	1.00	1.00	1.00	1.00	1.00	1.00
Adj Sat Flow, veh/h/ln	1863	1863	1863	1863	1863	1863	1900	1863	1900	1900	1863	1900
Adj Flow Rate, veh/h	15	53	15	14	197	16	35	68	16	15	76	35
Adj No. of Lanes	1	1	1	1	1	1	0	2	0	0	2	0
Peak Hour Factor	0.92	0.92	0.92	0.92	0.92	0.92	0.92	0.92	0.92	0.92	0.92	0.92
Percent Heavy Veh, %	2	2	2	2	2	2	2	2	2	2	2	2
Cap, veh/h	579	820	697	706	820	697	395	729	177	184	807	347
Arrive On Green	0.44	0.44	0.44	0.44	0.44	0.44	0.38	0.38	0.38	0.38	0.38	0.38
Sat Flow, veh/h	1164	1863	1583	1328	1863	1583	747	1919	467	254	2123	912
Grp Volume(v), veh/h	15	53	15	14	197	16	64	0	55	67	0	59
Grp Sat Flow(s),veh/h/ln	1164	1863	1583	1328	1863	1583	1520	0	1613	1755	0	1534
Q Serve(g_s), s	0.4	0.8	0.3	0.3	3.3	0.3	0.0	0.0	1.1	0.0	0.0	1.2
Cycle Q Clear(g_c), s	3.7	0.8	0.3	1.1	3.3	0.3	1.1	0.0	1.1	1.2	0.0	1.2
Prop In Lane	1.00		1.00	1.00		1.00	0.55		0.29	0.22		0.59
Lane Grp Cap(c), veh/h	579	820	697	706	820	697	689	0	613	755	0	583
V/C Ratio(X)	0.03	0.06	0.02	0.02	0.24	0.02	0.09	0.00	0.09	0.09	0.00	0.10
Avail Cap(c_a), veh/h	579	820	697	706	820	697	689	0	613	755	0	583
HCM Platoon Ratio	1.00	1.00	1.00	1.00	1.00	1.00	1.00	1.00	1.00	1.00	1.00	1.00
Upstream Filter(I)	1.00	1.00	1.00	0.90	0.90	0.90	0.96	0.00	0.96	1.00	0.00	1.00
Uniform Delay (d), s/veh	9.9	8.1	7.9	8.4	8.8	7.9	10.0	0.0	10.0	10.0	0.0	10.0
Incr Delay (d2), s/veh	0.0	0.0	0.0	0.0	0.0	0.0	0.3	0.0	0.3	0.2	0.0	0.3
Initial Q Delay(d3),s/veh	0.0	0.0	0.0	0.0	0.0	0.0	0.0	0.0	0.0	0.0	0.0	0.0
%ile BackOfQ(50%),veh/ln	0.1	0.4	0.1	0.1	1.7	0.1	0.6	0.0	0.5	0.6	0.0	0.6
LnGrp Delay(d),s/veh	9.9	8.1	7.9	8.4	8.8	7.9	10.2	0.0	10.2	10.2	0.0	10.3
LnGrp LOS	A	A	A	A	A	A	B		B	B		B
Approach Vol, veh/h		83			227			119			126	
Approach Delay, s/veh		8.4			8.7			10.2			10.3	
Approach LOS		A			A			B			B	

Timer	1	2	3	4	5	6	7	8
Assigned Phs		2		4		6		8
Phs Duration (G+Y+Rc), s		23.5		26.5		23.5		26.5
Change Period (Y+Rc), s		4.5		4.5		4.5		4.5
Max Green Setting (Gmax), s		19.0		22.0		19.0		22.0
Max Q Clear Time (g_c+I1), s		3.1		5.7		3.2		5.3
Green Ext Time (p_c), s		0.3		0.2		0.3		0.7

Intersection Summary	
HCM 2010 Ctrl Delay	9.3
HCM 2010 LOS	A

Movement	EBL	EBT	EBR	WBL	WBT	WBR	NBL	NBT	NBR	SBL	SBT	SBR
Lane Configurations												
Traffic Volume (veh/h)	63	744	37	10	1023	17	25	32	14	20	41	88
Future Volume (veh/h)	63	744	37	10	1023	17	25	32	14	20	41	88
Number	7	4	14	3	8	18	5	2	12	1	6	16
Initial Q (Qb), veh	0	0	0	0	0	0	0	0	0	0	0	0
Ped-Bike Adj(A_pbT)	1.00		1.00	1.00		1.00	1.00		1.00	1.00		1.00
Parking Bus, Adj	1.00	1.00	1.00	1.00	1.00	1.00	1.00	1.00	1.00	1.00	1.00	1.00
Adj Sat Flow, veh/h/ln	1863	1863	1900	1863	1863	1900	1900	1863	1900	1900	1863	1900
Adj Flow Rate, veh/h	68	809	40	11	1112	18	27	35	15	22	45	96
Adj No. of Lanes	1	2	0	1	2	0	0	2	0	0	2	0
Peak Hour Factor	0.92	0.92	0.92	0.92	0.92	0.92	0.92	0.92	0.92	0.92	0.92	0.92
Percent Heavy Veh, %	2	2	2	2	2	2	2	2	2	2	2	2
Cap, veh/h	186	1576	78	269	1637	26	436	599	273	262	512	619
Arrive On Green	0.46	0.46	0.46	0.46	0.46	0.46	0.43	0.43	0.43	0.43	0.43	0.43
Sat Flow, veh/h	496	3433	170	647	3564	58	858	1393	635	486	1192	1441
Grp Volume(v), veh/h	68	417	432	11	552	578	40	0	37	67	0	96
Grp Sat Flow(s),veh/h/ln	496	1770	1833	647	1770	1853	1303	0	1583	1678	0	1441
Q Serve(g_s), s	11.2	15.0	15.0	1.1	22.1	22.1	0.3	0.0	1.2	0.0	0.0	3.7
Cycle Q Clear(g_c), s	33.3	15.0	15.0	16.1	22.1	22.1	4.0	0.0	1.2	1.9	0.0	3.7
Prop In Lane	1.00		0.09	1.00		0.03	0.68		0.40	0.33		1.00
Lane Grp Cap(c), veh/h	186	813	842	269	813	851	627	0	680	774	0	619
V/C Ratio(X)	0.37	0.51	0.51	0.04	0.68	0.68	0.06	0.00	0.06	0.09	0.00	0.16
Avail Cap(c_a), veh/h	251	1042	1079	353	1042	1091	627	0	680	774	0	619
HCM Platoon Ratio	1.00	1.00	1.00	1.00	1.00	1.00	1.00	1.00	1.00	1.00	1.00	1.00
Upstream Filter(I)	1.00	1.00	1.00	0.58	0.58	0.58	1.00	0.00	1.00	1.00	0.00	1.00
Uniform Delay (d), s/veh	32.2	17.2	17.2	22.9	19.1	19.1	15.3	0.0	15.0	15.2	0.0	15.7
Incr Delay (d2), s/veh	1.2	0.5	0.5	0.0	0.7	0.7	0.2	0.0	0.2	0.2	0.0	0.5
Initial Q Delay(d3),s/veh	0.0	0.0	0.0	0.0	0.0	0.0	0.0	0.0	0.0	0.0	0.0	0.0
%ile BackOfQ(50%),veh/ln	1.6	7.4	7.7	0.2	10.9	11.4	0.6	0.0	0.6	1.0	0.0	1.5
LnGrp Delay(d),s/veh	33.4	17.7	17.7	23.0	19.8	19.8	15.5	0.0	15.1	15.4	0.0	16.2
LnGrp LOS	C	B	B	C	B	B	B		B	B		B
Approach Vol, veh/h		917			1141			77			163	
Approach Delay, s/veh		18.9			19.9			15.3			15.9	
Approach LOS		B			B			B			B	

Timer	1	2	3	4	5	6	7	8
Assigned Phs		2		4		6		8
Phs Duration (G+Y+Rc), s		43.7		46.3		43.7		46.3
Change Period (Y+Rc), s		5.0		5.0		5.0		5.0
Max Green Setting (Gmax), s		27.0		53.0		27.0		53.0
Max Q Clear Time (g_c+I1), s		6.0		35.3		5.7		24.1
Green Ext Time (p_c), s		0.3		6.0		0.9		9.1

Intersection Summary	
HCM 2010 Ctrl Delay	19.0
HCM 2010 LOS	B

Movement	EBL	EBT	EBR	WBL	WBT	WBR	NBL	NBT	NBR	SBL	SBT	SBR
Lane Configurations												
Traffic Volume (veh/h)	16	455	34	51	418	71	15	130	20	56	209	26
Future Volume (veh/h)	16	455	34	51	418	71	15	130	20	56	209	26
Number	7	4	14	3	8	18	5	2	12	1	6	16
Initial Q (Qb), veh	0	0	0	0	0	0	0	0	0	0	0	0
Ped-Bike Adj(A_pbT)	1.00		1.00	1.00		1.00	1.00		1.00	1.00		1.00
Parking Bus, Adj	1.00	1.00	1.00	1.00	1.00	1.00	1.00	1.00	1.00	1.00	1.00	1.00
Adj Sat Flow, veh/h/ln	1569	1569	1600	1569	1569	1600	1569	1569	1600	1569	1569	1600
Adj Flow Rate, veh/h	17	495	37	55	454	77	16	141	22	61	227	28
Adj No. of Lanes	1	2	0	1	2	0	1	1	0	1	1	0
Peak Hour Factor	0.92	0.92	0.92	0.92	0.92	0.92	0.92	0.92	0.92	0.92	0.92	0.92
Percent Heavy Veh, %	2	2	2	2	2	2	2	2	2	2	2	2
Cap, veh/h	304	812	61	313	766	129	133	411	64	166	455	56
Arrive On Green	0.08	0.29	0.29	0.09	0.30	0.30	0.18	0.62	0.62	0.11	0.33	0.33
Sat Flow, veh/h	1494	2812	210	1494	2552	430	1494	1325	207	1494	1370	169
Grp Volume(v), veh/h	17	262	270	55	264	267	16	0	163	61	0	255
Grp Sat Flow(s),veh/h/ln	1494	1490	1532	1494	1490	1493	1494	0	1532	1494	0	1539
Q Serve(g_s), s	0.7	13.6	13.7	2.1	13.6	13.7	0.8	0.0	4.6	3.4	0.0	11.9
Cycle Q Clear(g_c), s	0.7	13.6	13.7	2.1	13.6	13.7	0.8	0.0	4.6	3.4	0.0	11.9
Prop In Lane	1.00		0.14	1.00		0.29	1.00		0.13	1.00		0.11
Lane Grp Cap(c), veh/h	304	431	442	313	447	448	133	0	475	166	0	511
V/C Ratio(X)	0.06	0.61	0.61	0.18	0.59	0.60	0.12	0.00	0.34	0.37	0.00	0.50
Avail Cap(c_a), veh/h	304	431	442	313	447	448	133	0	475	166	0	511
HCM Platoon Ratio	1.00	1.00	1.00	1.00	1.00	1.00	2.00	2.00	2.00	1.00	1.00	1.00
Upstream Filter(I)	0.89	0.89	0.89	1.00	1.00	1.00	0.98	0.00	0.98	1.00	0.00	1.00
Uniform Delay (d), s/veh	19.2	27.6	27.6	19.2	26.8	26.9	34.0	0.0	12.7	37.1	0.0	24.1
Incr Delay (d2), s/veh	0.3	5.6	5.5	1.2	5.6	5.8	1.8	0.0	1.9	6.2	0.0	3.5
Initial Q Delay(d3),s/veh	0.0	0.0	0.0	0.0	0.0	0.0	0.0	0.0	0.0	0.0	0.0	0.0
%ile BackOfQ(50%),veh/ln	0.3	6.3	6.5	1.0	6.3	6.4	0.4	0.0	2.2	1.7	0.0	5.5
LnGrp Delay(d),s/veh	19.5	33.2	33.2	20.4	32.4	32.6	35.9	0.0	14.6	43.2	0.0	27.5
LnGrp LOS	B	C	C	C	C	C	D		B	D		C
Approach Vol, veh/h		549			586			179			316	
Approach Delay, s/veh		32.8			31.4			16.5			30.5	
Approach LOS		C			C			B			C	

Timer	1	2	3	4	5	6	7	8
Assigned Phs	1	2	3	4	5	6	7	8
Phs Duration (G+Y+Rc), s	14.0	33.0	12.0	31.0	12.0	35.0	11.0	32.0
Change Period (Y+Rc), s	4.0	5.1	4.0	5.0	4.0	5.1	4.0	5.0
Max Green Setting (Gmax), s	10.0	27.9	8.0	26.0	8.0	29.9	7.0	27.0
Max Q Clear Time (g_c+I1), s	5.4	6.6	4.1	15.7	2.8	13.9	2.7	15.7
Green Ext Time (p_c), s	0.0	0.8	0.0	2.3	0.0	1.3	0.0	2.5

Intersection Summary	
HCM 2010 Ctrl Delay	30.1
HCM 2010 LOS	C

Movement	EBL	EBT	EBR	WBL	WBT	WBR	NBL	NBT	NBR	SBL	SBT	SBR
Lane Configurations												
Traffic Volume (veh/h)	4	21	7	4	30	7	15	181	25	6	252	17
Future Volume (veh/h)	4	21	7	4	30	7	15	181	25	6	252	17
Number	7	4	14	3	8	18	5	2	12	1	6	16
Initial Q (Qb), veh	0	0	0	0	0	0	0	0	0	0	0	0
Ped-Bike Adj(A_pbT)	1.00		1.00	1.00		1.00	1.00		1.00	1.00		1.00
Parking Bus, Adj	1.00	1.00	1.00	1.00	1.00	1.00	1.00	1.00	1.00	1.00	1.00	1.00
Adj Sat Flow, veh/h/ln	1600	1569	1600	1600	1569	1600	1569	1569	1600	1569	1569	1600
Adj Flow Rate, veh/h	4	23	8	4	33	8	16	197	27	7	274	18
Adj No. of Lanes	0	1	0	0	1	0	1	1	0	1	1	0
Peak Hour Factor	0.92	0.92	0.92	0.92	0.92	0.92	0.92	0.92	0.92	0.92	0.92	0.92
Percent Heavy Veh, %	2	2	2	2	2	2	2	2	2	2	2	2
Cap, veh/h	51	83	26	48	91	21	133	907	124	149	993	65
Arrive On Green	0.08	0.08	0.08	0.08	0.08	0.08	0.18	1.00	1.00	0.20	1.00	1.00
Sat Flow, veh/h	78	1064	338	61	1172	267	1494	1351	185	1494	1456	96
Grp Volume(v), veh/h	35	0	0	45	0	0	16	0	224	7	0	292
Grp Sat Flow(s),veh/h/ln	1480	0	0	1500	0	0	1494	0	1536	1494	0	1552
Q Serve(g_s), s	0.0	0.0	0.0	0.0	0.0	0.0	0.8	0.0	0.0	0.3	0.0	0.0
Cycle Q Clear(g_c), s	2.0	0.0	0.0	2.5	0.0	0.0	0.8	0.0	0.0	0.3	0.0	0.0
Prop In Lane	0.11		0.23	0.09		0.18	1.00		0.12	1.00		0.06
Lane Grp Cap(c), veh/h	160	0	0	160	0	0	133	0	1031	149	0	1059
V/C Ratio(X)	0.22	0.00	0.00	0.28	0.00	0.00	0.12	0.00	0.22	0.05	0.00	0.28
Avail Cap(c_a), veh/h	504	0	0	511	0	0	166	0	1031	183	0	1059
HCM Platoon Ratio	1.00	1.00	1.00	1.00	1.00	1.00	2.00	2.00	2.00	2.00	2.00	2.00
Upstream Filter(I)	1.00	0.00	0.00	1.00	0.00	0.00	0.98	0.00	0.98	0.90	0.00	0.90
Uniform Delay (d), s/veh	39.2	0.0	0.0	39.4	0.0	0.0	34.0	0.0	0.0	32.5	0.0	0.0
Incr Delay (d2), s/veh	0.7	0.0	0.0	0.9	0.0	0.0	0.4	0.0	0.5	0.1	0.0	0.6
Initial Q Delay(d3),s/veh	0.0	0.0	0.0	0.0	0.0	0.0	0.0	0.0	0.0	0.0	0.0	0.0
%ile BackOfQ(50%),veh/ln	0.8	0.0	0.0	1.1	0.0	0.0	0.3	0.0	0.1	0.1	0.0	0.2
LnGrp Delay(d),s/veh	39.9	0.0	0.0	40.4	0.0	0.0	34.4	0.0	0.5	32.7	0.0	0.6
LnGrp LOS	D			D			C		A	C		A
Approach Vol, veh/h		35			45			240			299	
Approach Delay, s/veh		39.9			40.4			2.7			1.3	
Approach LOS		D			D			A			A	

Timer	1	2	3	4	5	6	7	8
Assigned Phs	1	2		4	5	6		8
Phs Duration (G+Y+Rc), s	13.0	65.4		11.6	12.0	66.4		11.6
Change Period (Y+Rc), s	4.0	5.0		4.6	4.0	5.0		4.6
Max Green Setting (Gmax), s	11.0	37.0		28.4	10.0	38.0		28.4
Max Q Clear Time (g_c+I1), s	2.3	2.0		4.0	2.8	2.0		4.5
Green Ext Time (p_c), s	0.0	1.4		0.1	0.0	1.9		0.2

Intersection Summary	
HCM 2010 Ctrl Delay	6.9
HCM 2010 LOS	A

Movement	EBL	EBT	EBR	WBL	WBT	WBR	NBL	NBT	NBR	SBL	SBT	SBR
Lane Configurations												
Traffic Volume (veh/h)	36	127	35	16	58	13	20	197	60	17	239	15
Future Volume (veh/h)	36	127	35	16	58	13	20	197	60	17	239	15
Number	7	4	14	3	8	18	5	2	12	1	6	16
Initial Q (Qb), veh	0	0	0	0	0	0	0	0	0	0	0	0
Ped-Bike Adj(A_pbT)	1.00		1.00	1.00		1.00	1.00		1.00	1.00		1.00
Parking Bus, Adj	1.00	1.00	1.00	1.00	1.00	1.00	1.00	1.00	1.00	1.00	1.00	1.00
Adj Sat Flow, veh/h/ln	1863	1863	1900	1863	1863	1900	1863	1863	1900	1863	1863	1900
Adj Flow Rate, veh/h	39	138	38	17	63	14	22	214	65	18	260	16
Adj No. of Lanes	1	2	0	1	2	0	1	1	0	1	1	0
Peak Hour Factor	0.92	0.92	0.92	0.92	0.92	0.92	0.92	0.92	0.92	0.92	0.92	0.92
Percent Heavy Veh, %	2	2	2	2	2	2	2	2	2	2	2	2
Cap, veh/h	170	248	66	128	260	56	158	899	273	177	1157	71
Arrive On Green	0.09	0.09	0.09	0.09	0.09	0.09	0.18	1.00	1.00	0.20	1.00	1.00
Sat Flow, veh/h	1317	2764	738	1204	2898	624	1774	1372	417	1774	1737	107
Grp Volume(v), veh/h	39	87	89	17	38	39	22	0	279	18	0	276
Grp Sat Flow(s),veh/h/ln	1317	1770	1732	1204	1770	1753	1774	0	1789	1774	0	1844
Q Serve(g_s), s	2.6	4.2	4.4	1.2	1.8	1.9	0.9	0.0	0.0	0.7	0.0	0.0
Cycle Q Clear(g_c), s	4.4	4.2	4.4	5.7	1.8	1.9	0.9	0.0	0.0	0.7	0.0	0.0
Prop In Lane	1.00		0.43	1.00		0.36	1.00		0.23	1.00		0.06
Lane Grp Cap(c), veh/h	170	159	155	128	159	157	158	0	1172	177	0	1228
V/C Ratio(X)	0.23	0.55	0.57	0.13	0.24	0.25	0.14	0.00	0.24	0.10	0.00	0.22
Avail Cap(c_a), veh/h	477	570	558	408	570	565	217	0	1172	217	0	1228
HCM Platoon Ratio	1.00	1.00	1.00	1.00	1.00	1.00	2.00	2.00	2.00	2.00	2.00	2.00
Upstream Filter(I)	0.99	0.99	0.99	1.00	1.00	1.00	0.91	0.00	0.91	0.97	0.00	0.97
Uniform Delay (d), s/veh	40.2	39.2	39.3	42.1	38.1	38.2	34.1	0.0	0.0	32.7	0.0	0.0
Incr Delay (d2), s/veh	0.7	2.9	3.3	0.5	0.8	0.8	0.4	0.0	0.4	0.2	0.0	0.4
Initial Q Delay(d3),s/veh	0.0	0.0	0.0	0.0	0.0	0.0	0.0	0.0	0.0	0.0	0.0	0.0
%ile BackOfQ(50%),veh/ln	1.0	2.2	2.3	0.4	0.9	0.9	0.5	0.0	0.1	0.4	0.0	0.1
LnGrp Delay(d),s/veh	40.9	42.1	42.6	42.5	38.9	39.0	34.5	0.0	0.4	32.9	0.0	0.4
LnGrp LOS	D	D	D	D	D	D	C		A	C		A
Approach Vol, veh/h		215			94			301			294	
Approach Delay, s/veh		42.1			39.6			2.9			2.4	
Approach LOS		D			D			A			A	

Timer	1	2	3	4	5	6	7	8
Assigned Phs	1	2		4	5	6		8
Phs Duration (G+Y+Rc), s	13.0	63.9		13.1	12.0	64.9		13.1
Change Period (Y+Rc), s	4.0	5.0		5.0	4.0	5.0		5.0
Max Green Setting (Gmax), s	11.0	36.0		29.0	11.0	36.0		29.0
Max Q Clear Time (g_c+I1), s	2.7	2.0		6.4	2.9	2.0		7.7
Green Ext Time (p_c), s	0.0	1.8		1.0	0.0	1.7		0.4

Intersection Summary	
HCM 2010 Ctrl Delay	15.9
HCM 2010 LOS	B

Movement	EBL	EBT	EBR	WBL	WBT	WBR	NBL	NBT	NBR	SBL	SBT	SBR
Lane Configurations												
Traffic Volume (veh/h)	132	1510	51	17	702	20	29	124	37	35	194	39
Future Volume (veh/h)	132	1510	51	17	702	20	29	124	37	35	194	39
Number	7	4	14	3	8	18	5	2	12	1	6	16
Initial Q (Qb), veh	0	0	0	0	0	0	0	0	0	0	0	0
Ped-Bike Adj(A_pbT)	1.00		1.00	1.00		1.00	1.00		1.00	1.00		1.00
Parking Bus, Adj	1.00	1.00	1.00	1.00	1.00	1.00	1.00	1.00	1.00	1.00	1.00	1.00
Adj Sat Flow, veh/h/ln	1863	1863	1900	1863	1863	1900	1863	1863	1900	1863	1863	1900
Adj Flow Rate, veh/h	143	1641	55	18	763	22	32	135	40	38	211	42
Adj No. of Lanes	1	2	0	1	2	0	1	1	0	1	1	0
Peak Hour Factor	0.92	0.92	0.92	0.92	0.92	0.92	0.92	0.92	0.92	0.92	0.92	0.92
Percent Heavy Veh, %	2	2	2	2	2	2	2	2	2	2	2	2
Cap, veh/h	240	1398	47	80	1405	41	98	514	152	109	571	114
Arrive On Green	0.80	0.80	0.80	0.40	0.40	0.40	0.06	0.37	0.37	0.12	0.76	0.76
Sat Flow, veh/h	686	3495	117	288	3513	101	1774	1381	409	1774	1509	300
Grp Volume(v), veh/h	143	828	868	18	384	401	32	0	175	38	0	253
Grp Sat Flow(s),veh/h/ln	686	1770	1842	288	1770	1845	1774	0	1791	1774	0	1810
Q Serve(g_s), s	17.1	36.0	36.0	0.0	15.0	15.0	1.6	0.0	6.1	1.8	0.0	4.3
Cycle Q Clear(g_c), s	32.1	36.0	36.0	36.0	15.0	15.0	1.6	0.0	6.1	1.8	0.0	4.3
Prop In Lane	1.00		0.06	1.00		0.05	1.00		0.23	1.00		0.17
Lane Grp Cap(c), veh/h	240	708	737	80	708	738	98	0	666	109	0	685
V/C Ratio(X)	0.60	1.17	1.18	0.22	0.54	0.54	0.33	0.00	0.26	0.35	0.00	0.37
Avail Cap(c_a), veh/h	240	708	737	80	708	738	187	0	666	197	0	685
HCM Platoon Ratio	2.00	2.00	2.00	1.00	1.00	1.00	1.00	1.00	1.00	2.00	2.00	2.00
Upstream Filter(I)	0.40	0.40	0.40	1.00	1.00	1.00	1.00	0.00	1.00	0.98	0.00	0.98
Uniform Delay (d), s/veh	15.5	9.0	9.0	45.0	20.7	20.7	40.9	0.0	19.7	37.8	0.0	7.3
Incr Delay (d2), s/veh	1.9	83.1	85.9	2.0	1.1	1.1	1.9	0.0	1.0	1.9	0.0	1.5
Initial Q Delay(d3),s/veh	0.0	0.0	0.0	0.0	0.0	0.0	0.0	0.0	0.0	0.0	0.0	0.0
%ile BackOfQ(50%),veh/ln	3.3	32.1	34.4	0.5	7.5	7.8	0.8	0.0	3.2	0.9	0.0	2.2
LnGrp Delay(d),s/veh	17.4	92.1	94.9	47.0	21.8	21.8	42.8	0.0	20.6	39.7	0.0	8.8
LnGrp LOS	B	F	F	D	C	C	D		C	D		A
Approach Vol, veh/h		1839			803			207			291	
Approach Delay, s/veh		87.6			22.3			24.1			12.9	
Approach LOS		F			C			C			B	

Timer	1	2	3	4	5	6	7	8
Assigned Phs	1	2		4	5	6		8
Phs Duration (G+Y+Rc), s	9.5	39.5		41.0	9.0	40.0		41.0
Change Period (Y+Rc), s	4.0	6.0		5.0	4.0	6.0		5.0
Max Green Setting (Gmax), s	10.0	29.0		36.0	9.5	29.5		36.0
Max Q Clear Time (g_c+I1), s	13.8	8.1		38.0	3.6	6.3		38.0
Green Ext Time (p_c), s	0.0	1.3		0.0	0.0	2.1		0.0

Intersection Summary	
HCM 2010 Ctrl Delay	59.8
HCM 2010 LOS	E

Movement	EBL	EBT	EBR	WBL	WBT	WBR	NBL	NBT	NBR	SBL	SBT	SBR
Lane Configurations												
Traffic Volume (veh/h)	11	478	92	33	394	22	12	35	15	15	97	17
Future Volume (veh/h)	11	478	92	33	394	22	12	35	15	15	97	17
Number	7	4	14	3	8	18	5	2	12	1	6	16
Initial Q (Qb), veh	0	0	0	0	0	0	0	0	0	0	0	0
Ped-Bike Adj(A_pbT)	1.00		1.00	1.00		1.00	1.00		1.00	1.00		1.00
Parking Bus, Adj	1.00	1.00	1.00	1.00	1.00	1.00	1.00	1.00	1.00	1.00	1.00	1.00
Adj Sat Flow, veh/h/ln	1900	1863	1900	1900	1863	1900	1900	1863	1900	1900	1863	1900
Adj Flow Rate, veh/h	12	520	100	36	428	24	13	38	16	16	105	18
Adj No. of Lanes	0	2	0	0	2	0	0	2	0	0	2	0
Peak Hour Factor	0.92	0.92	0.92	0.92	0.92	0.92	0.92	0.92	0.92	0.92	0.92	0.92
Percent Heavy Veh, %	2	2	2	2	2	2	2	2	2	2	2	2
Cap, veh/h	83	1209	228	134	1292	71	277	731	303	181	1024	169
Arrive On Green	0.42	0.42	0.42	0.42	0.42	0.42	0.38	0.38	0.38	0.38	0.38	0.38
Sat Flow, veh/h	20	2878	544	122	3075	168	472	1924	797	246	2694	445
Grp Volume(v), veh/h	338	0	294	250	0	238	36	0	31	74	0	65
Grp Sat Flow(s),veh/h/ln	1843	0	1599	1700	0	1665	1639	0	1554	1768	0	1617
Q Serve(g_s), s	0.0	0.0	6.5	0.0	0.0	4.8	0.0	0.0	0.6	0.0	0.0	1.3
Cycle Q Clear(g_c), s	6.4	0.0	6.5	4.5	0.0	4.8	0.6	0.0	0.6	1.3	0.0	1.3
Prop In Lane	0.04		0.34	0.14		0.10	0.36		0.51	0.22		0.28
Lane Grp Cap(c), veh/h	849	0	672	797	0	699	721	0	591	760	0	614
V/C Ratio(X)	0.40	0.00	0.44	0.31	0.00	0.34	0.05	0.00	0.05	0.10	0.00	0.11
Avail Cap(c_a), veh/h	849	0	672	797	0	699	721	0	591	760	0	614
HCM Platoon Ratio	1.00	1.00	1.00	1.00	1.00	1.00	1.00	1.00	1.00	1.00	1.00	1.00
Upstream Filter(I)	1.00	0.00	1.00	0.79	0.00	0.79	1.00	0.00	1.00	1.00	0.00	1.00
Uniform Delay (d), s/veh	10.3	0.0	10.3	9.7	0.0	9.8	9.8	0.0	9.8	10.0	0.0	10.0
Incr Delay (d2), s/veh	0.3	0.0	0.4	0.2	0.0	0.2	0.1	0.0	0.2	0.3	0.0	0.3
Initial Q Delay(d3),s/veh	0.0	0.0	0.0	0.0	0.0	0.0	0.0	0.0	0.0	0.0	0.0	0.0
%ile BackOfQ(50%),veh/ln	3.4	0.0	2.9	2.3	0.0	2.2	0.3	0.0	0.3	0.7	0.0	0.6
LnGrp Delay(d),s/veh	10.6	0.0	10.8	9.9	0.0	10.0	9.9	0.0	10.0	10.3	0.0	10.4
LnGrp LOS	B		B	A		B	A		A	B		B
Approach Vol, veh/h		632			488			67			139	
Approach Delay, s/veh		10.7			10.0			10.0			10.3	
Approach LOS		B			A			A			B	

Timer	1	2	3	4	5	6	7	8
Assigned Phs		2		4		6		8
Phs Duration (G+Y+Rc), s		24.0		26.0		24.0		26.0
Change Period (Y+Rc), s		5.0		5.0		5.0		5.0
Max Green Setting (Gmax), s		19.0		21.0		19.0		21.0
Max Q Clear Time (g_c+I1), s		2.6		8.5		3.3		6.8
Green Ext Time (p_c), s		0.2		3.2		0.6		2.6

Intersection Summary	
HCM 2010 Ctrl Delay	10.3
HCM 2010 LOS	B

Intersection	
Int Delay, s/veh	3.3

Movement	EBL	EBT	EBR	WBL	WBT	WBR	NBL	NBT	NBR	SBL	SBT	SBR
Lane Configurations												
Traffic Vol, veh/h	6	13	33	37	13	8	15	74	13	7	201	4
Future Vol, veh/h	6	13	33	37	13	8	15	74	13	7	201	4
Conflicting Peds, #/hr	0	0	0	0	0	0	0	0	0	0	0	0
Sign Control	Stop	Stop	Stop	Stop	Stop	Stop	Free	Free	Free	Free	Free	Free
RT Channelized	-	-	None	-	-	None	-	-	None	-	-	None
Storage Length	-	-	-	-	-	-	-	-	0	-	-	0
Veh in Median Storage, #	-	0	-	-	0	-	-	0	-	-	0	-
Grade, %	-	0	-	-	0	-	-	0	-	-	0	-
Peak Hour Factor	92	92	92	92	92	92	92	92	92	92	92	92
Heavy Vehicles, %	2	2	2	2	2	2	2	2	2	2	2	2
Mvmt Flow	7	14	36	40	14	9	16	80	14	8	218	4

Major/Minor	Minor2			Minor1			Major1			Major2		
Conflicting Flow All	365	360	218	373	350	80	222	0	0	94	0	0
Stage 1	234	234	-	112	112	-	-	-	-	-	-	-
Stage 2	131	126	-	261	238	-	-	-	-	-	-	-
Critical Hdwy	7.12	6.52	6.22	7.12	6.52	6.22	4.12	-	-	4.12	-	-
Critical Hdwy Stg 1	6.12	5.52	-	6.12	5.52	-	-	-	-	-	-	-
Critical Hdwy Stg 2	6.12	5.52	-	6.12	5.52	-	-	-	-	-	-	-
Follow-up Hdwy	3.518	4.018	3.318	3.518	4.018	3.318	2.218	-	-	2.218	-	-
Pot Cap-1 Maneuver	591	567	822	584	574	980	1347	-	-	1500	-	-
Stage 1	769	711	-	893	803	-	-	-	-	-	-	-
Stage 2	873	792	-	744	708	-	-	-	-	-	-	-
Platoon blocked, %								-	-		-	-
Mov Cap-1 Maneuver	566	556	822	540	563	980	1347	-	-	1500	-	-
Mov Cap-2 Maneuver	566	556	-	540	563	-	-	-	-	-	-	-
Stage 1	759	707	-	881	793	-	-	-	-	-	-	-
Stage 2	839	782	-	693	704	-	-	-	-	-	-	-

Approach	EB	WB	NB	SB
HCM Control Delay, s	10.6	11.9	1.1	0.2
HCM LOS	B	B		

Minor Lane/Major Mvmt	NBL	NBT	NBR	EBLn1	WBLn1	SBL	SBT	SBR
Capacity (veh/h)	1347	-	-	701	581	1500	-	-
HCM Lane V/C Ratio	0.012	-	-	0.081	0.109	0.005	-	-
HCM Control Delay (s)	7.7	0	-	10.6	11.9	7.4	0	-
HCM Lane LOS	A	A	-	B	B	A	A	-
HCM 95th %tile Q(veh)	0	-	-	0.3	0.4	0	-	-

Movement	EBL	EBT	EBR	WBL	WBT	WBR	NBL	NBT	NBR	SBL	SBT	SBR
Lane Configurations												
Traffic Volume (veh/h)	30	113	26	16	61	17	21	74	53	37	72	73
Future Volume (veh/h)	30	113	26	16	61	17	21	74	53	37	72	73
Number	7	4	14	3	8	18	5	2	12	1	6	16
Initial Q (Qb), veh	0	0	0	0	0	0	0	0	0	0	0	0
Ped-Bike Adj(A_pbT)	1.00		1.00	1.00		1.00	1.00		1.00	1.00		1.00
Parking Bus, Adj	1.00	1.00	1.00	1.00	1.00	1.00	1.00	1.00	1.00	1.00	1.00	1.00
Adj Sat Flow, veh/h/ln	1863	1863	1863	1863	1863	1863	1900	1863	1900	1900	1863	1900
Adj Flow Rate, veh/h	33	123	28	17	66	18	23	80	58	40	78	79
Adj No. of Lanes	1	1	1	1	1	1	0	2	0	0	2	0
Peak Hour Factor	0.92	0.92	0.92	0.92	0.92	0.92	0.92	0.92	0.92	0.92	0.92	0.92
Percent Heavy Veh, %	2	2	2	2	2	2	2	2	2	2	2	2
Cap, veh/h	693	820	697	637	820	697	212	652	439	286	503	484
Arrive On Green	0.44	0.44	0.44	0.44	0.44	0.44	0.38	0.38	0.38	0.38	0.38	0.38
Sat Flow, veh/h	1308	1863	1583	1231	1863	1583	317	1716	1155	492	1324	1274
Grp Volume(v), veh/h	33	123	28	17	66	18	86	0	75	106	0	91
Grp Sat Flow(s),veh/h/ln	1308	1863	1583	1231	1863	1583	1697	0	1491	1619	0	1470
Q Serve(g_s), s	0.8	2.0	0.5	0.4	1.0	0.3	0.0	0.0	1.6	0.0	0.0	2.0
Cycle Q Clear(g_c), s	1.8	2.0	0.5	2.4	1.0	0.3	1.5	0.0	1.6	1.9	0.0	2.0
Prop In Lane	1.00		1.00	1.00		1.00	0.27		0.77	0.38		0.87
Lane Grp Cap(c), veh/h	693	820	697	637	820	697	736	0	567	715	0	559
V/C Ratio(X)	0.05	0.15	0.04	0.03	0.08	0.03	0.12	0.00	0.13	0.15	0.00	0.16
Avail Cap(c_a), veh/h	693	820	697	637	820	697	736	0	567	715	0	559
HCM Platoon Ratio	1.00	1.00	1.00	1.00	1.00	1.00	1.00	1.00	1.00	1.00	1.00	1.00
Upstream Filter(I)	1.00	1.00	1.00	0.99	0.99	0.99	0.99	0.00	0.99	1.00	0.00	1.00
Uniform Delay (d), s/veh	8.6	8.4	8.0	9.1	8.1	7.9	10.1	0.0	10.1	10.2	0.0	10.2
Incr Delay (d2), s/veh	0.0	0.0	0.0	0.0	0.0	0.0	0.3	0.0	0.5	0.4	0.0	0.6
Initial Q Delay(d3),s/veh	0.0	0.0	0.0	0.0	0.0	0.0	0.0	0.0	0.0	0.0	0.0	0.0
%ile BackOfQ(50%),veh/ln	0.3	1.0	0.2	0.1	0.5	0.1	0.8	0.0	0.7	1.0	0.0	0.9
LnGrp Delay(d),s/veh	8.7	8.4	8.0	9.1	8.1	7.9	10.4	0.0	10.6	10.6	0.0	10.9
LnGrp LOS	A	A	A	A	A	A	B		B	B		B
Approach Vol, veh/h		184			101			161			197	
Approach Delay, s/veh		8.4			8.3			10.5			10.7	
Approach LOS		A			A			B			B	

Timer	1	2	3	4	5	6	7	8
Assigned Phs		2		4		6		8
Phs Duration (G+Y+Rc), s		23.5		26.5		23.5		26.5
Change Period (Y+Rc), s		4.5		4.5		4.5		4.5
Max Green Setting (Gmax), s		19.0		22.0		19.0		22.0
Max Q Clear Time (g_c+I1), s		3.6		4.0		4.0		4.4
Green Ext Time (p_c), s		0.5		0.5		0.6		0.2

Intersection Summary	
HCM 2010 Ctrl Delay	9.6
HCM 2010 LOS	A

Movement	EBL	EBT	EBR	WBL	WBT	WBR	NBL	NBT	NBR	SBL	SBT	SBR
Lane Configurations												
Traffic Volume (veh/h)	89	1704	10	10	738	29	7	25	8	17	32	24
Future Volume (veh/h)	89	1704	10	10	738	29	7	25	8	17	32	24
Number	7	4	14	3	8	18	5	2	12	1	6	16
Initial Q (Qb), veh	0	0	0	0	0	0	0	0	0	0	0	0
Ped-Bike Adj(A_pbT)	1.00		1.00	1.00		1.00	1.00		1.00	1.00		1.00
Parking Bus, Adj	1.00	1.00	1.00	1.00	1.00	1.00	1.00	1.00	1.00	1.00	1.00	1.00
Adj Sat Flow, veh/h/ln	1863	1863	1900	1863	1863	1900	1900	1863	1900	1900	1863	1900
Adj Flow Rate, veh/h	97	1852	11	11	802	32	8	27	9	18	35	26
Adj No. of Lanes	1	2	0	1	2	0	0	2	0	0	2	0
Peak Hour Factor	0.92	0.92	0.92	0.92	0.92	0.92	0.92	0.92	0.92	0.92	0.92	0.92
Percent Heavy Veh, %	2	2	2	2	2	2	2	2	2	2	2	2
Cap, veh/h	384	2119	13	117	2038	81	199	626	207	244	440	321
Arrive On Green	0.59	0.59	0.59	0.59	0.59	0.59	0.30	0.30	0.30	0.30	0.30	0.30
Sat Flow, veh/h	656	3607	21	245	3470	138	483	2077	686	620	1460	1064
Grp Volume(v), veh/h	97	908	955	11	409	425	23	0	21	42	0	37
Grp Sat Flow(s),veh/h/ln	656	1770	1859	245	1770	1838	1672	0	1574	1638	0	1507
Q Serve(g_s), s	8.4	39.1	39.2	3.6	11.2	11.2	0.0	0.0	0.8	0.0	0.0	1.6
Cycle Q Clear(g_c), s	19.6	39.1	39.2	42.8	11.2	11.2	0.8	0.0	0.8	1.5	0.0	1.6
Prop In Lane	1.00		0.01	1.00		0.08	0.34		0.44	0.43		0.71
Lane Grp Cap(c), veh/h	384	1040	1092	117	1040	1080	558	0	475	551	0	454
V/C Ratio(X)	0.25	0.87	0.87	0.09	0.39	0.39	0.04	0.00	0.04	0.08	0.00	0.08
Avail Cap(c_a), veh/h	407	1101	1157	126	1101	1144	558	0	475	551	0	454
HCM Platoon Ratio	1.00	1.00	1.00	1.00	1.00	1.00	1.00	1.00	1.00	1.00	1.00	1.00
Upstream Filter(I)	1.00	1.00	1.00	0.92	0.92	0.92	1.00	0.00	1.00	0.99	0.00	0.99
Uniform Delay (d), s/veh	15.2	15.7	15.8	33.9	10.0	10.0	22.2	0.0	22.3	22.5	0.0	22.5
Incr Delay (d2), s/veh	0.3	7.6	7.4	0.3	0.2	0.2	0.1	0.0	0.2	0.3	0.0	0.3
Initial Q Delay(d3),s/veh	0.0	0.0	0.0	0.0	0.0	0.0	0.0	0.0	0.0	0.0	0.0	0.0
%ile BackOfQ(50%),veh/ln	1.5	21.1	22.1	0.3	5.5	5.7	0.4	0.0	0.4	0.8	0.0	0.7
LnGrp Delay(d),s/veh	15.6	23.4	23.2	34.2	10.2	10.2	22.4	0.0	22.4	22.7	0.0	22.9
LnGrp LOS	B	C	C	C	B	B	C		C	C		C
Approach Vol, veh/h		1960			845			44			79	
Approach Delay, s/veh		22.9			10.5			22.4			22.8	
Approach LOS		C			B			C			C	

Timer	1	2	3	4	5	6	7	8
Assigned Phs		2		4		6		8
Phs Duration (G+Y+Rc), s		32.1		57.9		32.1		57.9
Change Period (Y+Rc), s		5.0		5.0		5.0		5.0
Max Green Setting (Gmax), s		24.0		56.0		24.0		56.0
Max Q Clear Time (g_c+I1), s		2.8		41.2		3.6		44.8
Green Ext Time (p_c), s		0.1		11.6		0.3		4.2

Intersection Summary	
HCM 2010 Ctrl Delay	19.3
HCM 2010 LOS	B

HCM 2010 Signalized Intersection Summary
1: E Street & 9th Street

08-14-2024

Movement	EBL	EBT	EBR	WBL	WBT	WBR	NBL	NBT	NBR	SBL	SBT	SBR
Lane Configurations												
Traffic Volume (veh/h)	53	472	33	42	567	77	42	355	54	56	244	41
Future Volume (veh/h)	53	472	33	42	567	77	42	355	54	56	244	41
Number	7	4	14	3	8	18	5	2	12	1	6	16
Initial Q (Qb), veh	0	0	0	0	0	0	0	0	0	0	0	0
Ped-Bike Adj(A_pbT)	1.00		1.00	1.00		1.00	1.00		1.00	1.00		1.00
Parking Bus, Adj	1.00	1.00	1.00	1.00	1.00	1.00	1.00	1.00	1.00	1.00	1.00	1.00
Adj Sat Flow, veh/h/ln	1569	1569	1600	1569	1569	1600	1569	1569	1600	1569	1569	1600
Adj Flow Rate, veh/h	58	513	36	46	616	84	46	386	59	61	265	45
Adj No. of Lanes	1	2	0	1	2	0	1	1	0	1	1	0
Peak Hour Factor	0.92	0.92	0.92	0.92	0.92	0.92	0.92	0.92	0.92	0.92	0.92	0.92
Percent Heavy Veh, %	2	2	2	2	2	2	2	2	2	2	2	2
Cap, veh/h	249	785	55	305	762	104	133	418	64	168	442	75
Arrive On Green	0.08	0.28	0.28	0.09	0.29	0.29	0.18	0.63	0.63	0.11	0.34	0.34
Sat Flow, veh/h	1494	2826	198	1494	2637	359	1494	1330	203	1494	1307	222
Grp Volume(v), veh/h	58	270	279	46	348	352	46	0	445	61	0	310
Grp Sat Flow(s),veh/h/ln	1494	1490	1534	1494	1490	1505	1494	0	1533	1494	0	1529
Q Serve(g_s), s	2.3	14.4	14.5	1.8	19.5	19.6	2.4	0.0	23.1	3.4	0.0	15.2
Cycle Q Clear(g_c), s	2.3	14.4	14.5	1.8	19.5	19.6	2.4	0.0	23.1	3.4	0.0	15.2
Prop In Lane	1.00		0.13	1.00		0.24	1.00		0.13	1.00		0.15
Lane Grp Cap(c), veh/h	249	414	426	305	431	435	133	0	482	168	0	517
V/C Ratio(X)	0.23	0.65	0.65	0.15	0.81	0.81	0.35	0.00	0.92	0.36	0.00	0.60
Avail Cap(c_a), veh/h	249	414	426	305	431	435	133	0	482	168	0	517
HCM Platoon Ratio	1.00	1.00	1.00	1.00	1.00	1.00	2.00	2.00	2.00	1.00	1.00	1.00
Upstream Filter(I)	0.89	0.89	0.89	1.00	1.00	1.00	0.88	0.00	0.88	1.00	0.00	1.00
Uniform Delay (d), s/veh	21.2	28.7	28.7	19.5	29.7	29.7	34.7	0.0	15.7	37.0	0.0	24.8
Incr Delay (d2), s/veh	1.9	7.0	6.8	1.0	15.0	15.0	6.2	0.0	23.4	6.0	0.0	5.1
Initial Q Delay(d3),s/veh	0.0	0.0	0.0	0.0	0.0	0.0	0.0	0.0	0.0	0.0	0.0	0.0
%ile BackOfQ(50%),veh/ln	1.1	6.7	6.9	0.8	9.8	9.9	1.2	0.0	12.5	1.7	0.0	7.1
LnGrp Delay(d),s/veh	23.2	35.6	35.5	20.6	44.6	44.7	40.9	0.0	39.2	43.0	0.0	29.8
LnGrp LOS	C	D	D	C	D	D	D		D	D		C
Approach Vol, veh/h		607			746			491			371	
Approach Delay, s/veh		34.4			43.2			39.3			32.0	
Approach LOS		C			D			D			C	

Timer	1	2	3	4	5	6	7	8
Assigned Phs	1	2	3	4	5	6	7	8
Phs Duration (G+Y+Rc), s	14.1	33.4	12.5	30.0	12.0	35.5	11.5	31.0
Change Period (Y+Rc), s	4.0	5.1	4.0	5.0	4.0	5.1	4.0	5.0
Max Green Setting (Gmax), s	10.1	28.3	8.5	25.0	8.0	30.4	7.5	26.0
Max Q Clear Time (g_c+I1), s	5.4	25.1	3.8	16.5	4.4	17.2	4.3	21.6
Green Ext Time (p_c), s	0.0	0.8	0.0	2.2	0.0	1.5	0.0	1.8

Intersection Summary	
HCM 2010 Ctrl Delay	38.1
HCM 2010 LOS	D

Movement	EBL	EBT	EBR	WBL	WBT	WBR	NBL	NBT	NBR	SBL	SBT	SBR
Lane Configurations												
Traffic Volume (veh/h)	26	37	17	14	34	21	38	413	19	7	311	13
Future Volume (veh/h)	26	37	17	14	34	21	38	413	19	7	311	13
Number	7	4	14	3	8	18	5	2	12	1	6	16
Initial Q (Qb), veh	0	0	0	0	0	0	0	0	0	0	0	0
Ped-Bike Adj(A_pbT)	1.00		1.00	1.00		1.00	1.00		1.00	1.00		1.00
Parking Bus, Adj	1.00	1.00	1.00	1.00	1.00	1.00	1.00	1.00	1.00	1.00	1.00	1.00
Adj Sat Flow, veh/h/ln	1600	1569	1600	1600	1569	1600	1569	1569	1600	1569	1569	1600
Adj Flow Rate, veh/h	28	40	18	15	37	23	41	449	21	8	338	14
Adj No. of Lanes	0	1	0	0	1	0	1	1	0	1	1	0
Peak Hour Factor	0.92	0.92	0.92	0.92	0.92	0.92	0.92	0.92	0.92	0.92	0.92	0.92
Percent Heavy Veh, %	2	2	2	2	2	2	2	2	2	2	2	2
Cap, veh/h	82	65	25	63	68	37	133	992	46	149	1014	42
Arrive On Green	0.08	0.08	0.08	0.08	0.08	0.08	0.18	1.00	1.00	0.20	1.00	1.00
Sat Flow, veh/h	360	791	304	189	835	453	1494	1487	70	1494	1496	62
Grp Volume(v), veh/h	86	0	0	75	0	0	41	0	470	8	0	352
Grp Sat Flow(s),veh/h/ln	1455	0	0	1476	0	0	1494	0	1556	1494	0	1558
Q Serve(g_s), s	0.7	0.0	0.0	0.0	0.0	0.0	2.1	0.0	0.0	0.4	0.0	0.0
Cycle Q Clear(g_c), s	5.0	0.0	0.0	4.3	0.0	0.0	2.1	0.0	0.0	0.4	0.0	0.0
Prop In Lane	0.33		0.21	0.20		0.31	1.00		0.04	1.00		0.04
Lane Grp Cap(c), veh/h	172	0	0	169	0	0	133	0	1038	149	0	1056
V/C Ratio(X)	0.50	0.00	0.00	0.44	0.00	0.00	0.31	0.00	0.45	0.05	0.00	0.33
Avail Cap(c_a), veh/h	457	0	0	462	0	0	143	0	1038	159	0	1056
HCM Platoon Ratio	1.00	1.00	1.00	1.00	1.00	1.00	2.00	2.00	2.00	2.00	2.00	2.00
Upstream Filter(I)	1.00	0.00	0.00	1.00	0.00	0.00	0.92	0.00	0.92	0.82	0.00	0.82
Uniform Delay (d), s/veh	40.2	0.0	0.0	39.9	0.0	0.0	34.6	0.0	0.0	32.6	0.0	0.0
Incr Delay (d2), s/veh	2.2	0.0	0.0	1.8	0.0	0.0	1.2	0.0	1.3	0.1	0.0	0.7
Initial Q Delay(d3),s/veh	0.0	0.0	0.0	0.0	0.0	0.0	0.0	0.0	0.0	0.0	0.0	0.0
%ile BackOfQ(50%),veh/ln	2.2	0.0	0.0	1.9	0.0	0.0	0.9	0.0	0.4	0.2	0.0	0.2
LnGrp Delay(d),s/veh	42.4	0.0	0.0	41.8	0.0	0.0	35.8	0.0	1.3	32.7	0.0	0.7
LnGrp LOS	D			D			D		A	C		A
Approach Vol, veh/h		86			75			511			360	
Approach Delay, s/veh		42.4			41.8			4.1			1.4	
Approach LOS		D			D			A			A	

Timer	1	2	3	4	5	6	7	8
Assigned Phs	1	2		4	5	6		8
Phs Duration (G+Y+Rc), s	13.0	65.0		12.0	12.0	66.0		12.0
Change Period (Y+Rc), s	4.0	5.0		4.6	4.0	5.0		4.6
Max Green Setting (Gmax), s	9.6	40.4		26.4	8.6	41.4		26.4
Max Q Clear Time (g_c+I1), s	2.4	2.0		7.0	4.1	2.0		6.3
Green Ext Time (p_c), s	0.0	3.4		0.4	0.0	2.4		0.3

Intersection Summary	
HCM 2010 Ctrl Delay	9.1
HCM 2010 LOS	A

Movement	EBL	EBT	EBR	WBL	WBT	WBR	NBL	NBT	NBR	SBL	SBT	SBR
Lane Configurations												
Traffic Volume (veh/h)	18	70	13	61	220	18	29	396	29	21	342	35
Future Volume (veh/h)	18	70	13	61	220	18	29	396	29	21	342	35
Number	7	4	14	3	8	18	5	2	12	1	6	16
Initial Q (Qb), veh	0	0	0	0	0	0	0	0	0	0	0	0
Ped-Bike Adj(A_pbT)	1.00		1.00	1.00		1.00	1.00		1.00	1.00		1.00
Parking Bus, Adj	1.00	1.00	1.00	1.00	1.00	1.00	1.00	1.00	1.00	1.00	1.00	1.00
Adj Sat Flow, veh/h/ln	1863	1863	1900	1863	1863	1900	1863	1863	1900	1863	1863	1900
Adj Flow Rate, veh/h	20	76	14	66	239	20	32	430	32	23	372	38
Adj No. of Lanes	1	2	0	1	2	0	1	1	0	1	1	0
Peak Hour Factor	0.92	0.92	0.92	0.92	0.92	0.92	0.92	0.92	0.92	0.92	0.92	0.92
Percent Heavy Veh, %	2	2	2	2	2	2	2	2	2	2	2	2
Cap, veh/h	129	341	61	197	377	31	158	1080	80	177	1067	109
Arrive On Green	0.11	0.11	0.11	0.11	0.11	0.11	0.18	1.00	1.00	0.20	1.00	1.00
Sat Flow, veh/h	1116	2999	539	1301	3309	275	1774	1713	127	1774	1663	170
Grp Volume(v), veh/h	20	44	46	66	127	132	32	0	462	23	0	410
Grp Sat Flow(s),veh/h/ln	1116	1770	1768	1301	1770	1814	1774	0	1840	1774	0	1833
Q Serve(g_s), s	1.6	2.0	2.1	4.4	6.2	6.3	1.4	0.0	0.0	1.0	0.0	0.0
Cycle Q Clear(g_c), s	7.8	2.0	2.1	6.5	6.2	6.3	1.4	0.0	0.0	1.0	0.0	0.0
Prop In Lane	1.00		0.30	1.00		0.15	1.00		0.07	1.00		0.09
Lane Grp Cap(c), veh/h	129	201	201	197	201	207	158	0	1160	177	0	1176
V/C Ratio(X)	0.15	0.22	0.23	0.33	0.63	0.64	0.20	0.00	0.40	0.13	0.00	0.35
Avail Cap(c_a), veh/h	337	531	530	440	531	544	177	0	1160	197	0	1176
HCM Platoon Ratio	1.00	1.00	1.00	1.00	1.00	1.00	2.00	2.00	2.00	2.00	2.00	2.00
Upstream Filter(I)	1.00	1.00	1.00	1.00	1.00	1.00	0.54	0.00	0.54	0.94	0.00	0.94
Uniform Delay (d), s/veh	41.9	36.2	36.3	39.2	38.1	38.1	34.3	0.0	0.0	32.8	0.0	0.0
Incr Delay (d2), s/veh	0.5	0.5	0.6	1.0	3.2	3.3	0.3	0.0	0.6	0.3	0.0	0.8
Initial Q Delay(d3),s/veh	0.0	0.0	0.0	0.0	0.0	0.0	0.0	0.0	0.0	0.0	0.0	0.0
%ile BackOfQ(50%),veh/ln	0.5	1.0	1.1	1.6	3.2	3.3	0.7	0.0	0.2	0.5	0.0	0.3
LnGrp Delay(d),s/veh	42.4	36.8	36.8	40.2	41.3	41.4	34.6	0.0	0.6	33.1	0.0	0.8
LnGrp LOS	D	D	D	D	D	D	C		A	C		A
Approach Vol, veh/h		110			325			494			433	
Approach Delay, s/veh		37.8			41.1			2.8			2.5	
Approach LOS		D			D			A			A	

Timer	1	2	3	4	5	6	7	8
Assigned Phs	1	2		4	5	6		8
Phs Duration (G+Y+Rc), s	13.0	61.8		15.2	12.0	62.8		15.2
Change Period (Y+Rc), s	4.0	5.0		5.0	4.0	5.0		5.0
Max Green Setting (Gmax), s	10.0	39.0		27.0	9.0	40.0		27.0
Max Q Clear Time (g_c+I1), s	3.0	2.0		9.8	3.4	2.0		8.5
Green Ext Time (p_c), s	0.0	3.3		0.4	0.0	2.9		1.5

Intersection Summary	
HCM 2010 Ctrl Delay	14.7
HCM 2010 LOS	B

Movement	EBL	EBT	EBR	WBL	WBT	WBR	NBL	NBT	NBR	SBL	SBT	SBR
Lane Configurations												
Traffic Volume (veh/h)	38	1005	53	44	1264	47	100	375	66	58	233	77
Future Volume (veh/h)	38	1005	53	44	1264	47	100	375	66	58	233	77
Number	7	4	14	3	8	18	5	2	12	1	6	16
Initial Q (Qb), veh	0	0	0	0	0	0	0	0	0	0	0	0
Ped-Bike Adj(A_pbT)	1.00		1.00	1.00		1.00	1.00		1.00	1.00		1.00
Parking Bus, Adj	1.00	1.00	1.00	1.00	1.00	1.00	1.00	1.00	1.00	1.00	1.00	1.00
Adj Sat Flow, veh/h/ln	1863	1863	1900	1863	1863	1900	1863	1863	1900	1863	1863	1900
Adj Flow Rate, veh/h	41	1092	58	48	1374	51	109	408	72	63	253	84
Adj No. of Lanes	1	2	0	1	2	0	1	1	0	1	1	0
Peak Hour Factor	0.92	0.92	0.92	0.92	0.92	0.92	0.92	0.92	0.92	0.92	0.92	0.92
Percent Heavy Veh, %	2	2	2	2	2	2	2	2	2	2	2	2
Cap, veh/h	90	1406	75	204	1431	53	166	529	93	141	440	146
Arrive On Green	0.82	0.82	0.82	0.41	0.41	0.41	0.09	0.34	0.34	0.16	0.66	0.66
Sat Flow, veh/h	375	3419	182	487	3481	129	1774	1543	272	1774	1340	445
Grp Volume(v), veh/h	41	565	585	48	698	727	109	0	480	63	0	337
Grp Sat Flow(s),veh/h/ln	375	1770	1831	487	1770	1840	1774	0	1815	1774	0	1784
Q Serve(g_s), s	2.4	14.1	14.2	7.3	34.5	34.6	5.3	0.0	21.3	2.9	0.0	9.4
Cycle Q Clear(g_c), s	37.0	14.1	14.2	21.5	34.5	34.6	5.3	0.0	21.3	2.9	0.0	9.4
Prop In Lane	1.00		0.10	1.00		0.07	1.00		0.15	1.00		0.25
Lane Grp Cap(c), veh/h	90	728	753	204	728	756	166	0	622	141	0	587
V/C Ratio(X)	0.46	0.78	0.78	0.24	0.96	0.96	0.66	0.00	0.77	0.45	0.00	0.57
Avail Cap(c_a), veh/h	90	728	753	204	728	756	203	0	622	197	0	587
HCM Platoon Ratio	2.00	2.00	2.00	1.00	1.00	1.00	1.00	1.00	1.00	2.00	2.00	2.00
Upstream Filter(I)	0.81	0.81	0.81	1.00	1.00	1.00	1.00	0.00	1.00	0.94	0.00	0.94
Uniform Delay (d), s/veh	26.2	6.0	6.0	27.8	25.8	25.8	39.4	0.0	26.4	36.1	0.0	11.9
Incr Delay (d2), s/veh	4.1	4.6	4.5	0.8	23.8	23.7	5.5	0.0	9.0	2.1	0.0	3.8
Initial Q Delay(d3),s/veh	0.0	0.0	0.0	0.0	0.0	0.0	0.0	0.0	0.0	0.0	0.0	0.0
%ile BackOfQ(50%),veh/ln	1.1	7.2	7.4	1.0	21.5	22.4	2.9	0.0	12.2	1.5	0.0	5.1
LnGrp Delay(d),s/veh	30.3	10.6	10.4	28.6	49.6	49.5	44.9	0.0	35.4	38.2	0.0	15.8
LnGrp LOS	C	B	B	C	D	D	D		D	D		B
Approach Vol, veh/h		1191			1473			589			400	
Approach Delay, s/veh		11.2			48.9			37.2			19.3	
Approach LOS		B			D			D			B	

Timer	1	2	3	4	5	6	7	8
Assigned Phs	1	2		4	5	6		8
Phs Duration (G+Y+Rc), s	11.1	36.9		42.0	12.4	35.6		42.0
Change Period (Y+Rc), s	4.0	6.0		5.0	4.0	6.0		5.0
Max Green Setting (Gmax), s	10.0	28.0		37.0	10.3	27.7		37.0
Max Q Clear Time (g_c+I1), s	11.9	23.3		39.0	7.3	11.4		36.6
Green Ext Time (p_c), s	0.0	1.7		0.0	0.1	2.5		0.3

Intersection Summary	
HCM 2010 Ctrl Delay	31.5
HCM 2010 LOS	C

Movement	EBL	EBT	EBR	WBL	WBT	WBR	NBL	NBT	NBR	SBL	SBT	SBR
Lane Configurations												
Traffic Volume (veh/h)	18	521	43	14	633	27	49	91	21	14	41	30
Future Volume (veh/h)	18	521	43	14	633	27	49	91	21	14	41	30
Number	7	4	14	3	8	18	5	2	12	1	6	16
Initial Q (Qb), veh	0	0	0	0	0	0	0	0	0	0	0	0
Ped-Bike Adj(A_pbT)	1.00		1.00	1.00		1.00	1.00		1.00	1.00		1.00
Parking Bus, Adj	1.00	1.00	1.00	1.00	1.00	1.00	1.00	1.00	1.00	1.00	1.00	1.00
Adj Sat Flow, veh/h/ln	1900	1863	1900	1900	1863	1900	1900	1863	1900	1900	1863	1900
Adj Flow Rate, veh/h	20	566	47	15	688	29	53	99	23	15	45	33
Adj No. of Lanes	0	2	0	0	2	0	0	2	0	0	2	0
Peak Hour Factor	0.92	0.92	0.92	0.92	0.92	0.92	0.92	0.92	0.92	0.92	0.92	0.92
Percent Heavy Veh, %	2	2	2	2	2	2	2	2	2	2	2	2
Cap, veh/h	93	1324	108	85	1402	58	412	725	173	237	632	433
Arrive On Green	0.42	0.42	0.42	0.42	0.42	0.42	0.38	0.38	0.38	0.38	0.38	0.38
Sat Flow, veh/h	40	3153	257	24	3339	139	787	1909	455	376	1664	1139
Grp Volume(v), veh/h	331	0	302	384	0	348	93	0	82	50	0	43
Grp Sat Flow(s),veh/h/ln	1800	0	1650	1831	0	1671	1536	0	1615	1685	0	1494
Q Serve(g_s), s	0.0	0.0	6.5	0.0	0.0	7.6	0.1	0.0	1.7	0.0	0.0	0.9
Cycle Q Clear(g_c), s	6.3	0.0	6.5	7.5	0.0	7.6	1.7	0.0	1.7	0.9	0.0	0.9
Prop In Lane	0.06		0.16	0.04		0.08	0.57		0.28	0.30		0.76
Lane Grp Cap(c), veh/h	833	0	693	844	0	702	696	0	614	734	0	568
V/C Ratio(X)	0.40	0.00	0.44	0.45	0.00	0.50	0.13	0.00	0.13	0.07	0.00	0.08
Avail Cap(c_a), veh/h	833	0	693	844	0	702	696	0	614	734	0	568
HCM Platoon Ratio	1.00	1.00	1.00	1.00	1.00	1.00	1.00	1.00	1.00	1.00	1.00	1.00
Upstream Filter(I)	1.00	0.00	1.00	0.52	0.00	0.52	1.00	0.00	1.00	1.00	0.00	1.00
Uniform Delay (d), s/veh	10.2	0.0	10.3	10.6	0.0	10.6	10.1	0.0	10.1	9.9	0.0	9.9
Incr Delay (d2), s/veh	0.3	0.0	0.4	0.2	0.0	0.3	0.4	0.0	0.4	0.2	0.0	0.3
Initial Q Delay(d3),s/veh	0.0	0.0	0.0	0.0	0.0	0.0	0.0	0.0	0.0	0.0	0.0	0.0
%ile BackOfQ(50%),veh/ln	3.3	0.0	3.0	3.9	0.0	3.5	0.9	0.0	0.8	0.5	0.0	0.4
LnGrp Delay(d),s/veh	10.5	0.0	10.7	10.8	0.0	10.9	10.5	0.0	10.6	10.1	0.0	10.2
LnGrp LOS	B		B	B		B	B		B	B		B
Approach Vol, veh/h		633			732			175			93	
Approach Delay, s/veh		10.6			10.8			10.5			10.1	
Approach LOS		B			B			B			B	

Timer	1	2	3	4	5	6	7	8
Assigned Phs		2		4		6		8
Phs Duration (G+Y+Rc), s		24.0		26.0		24.0		26.0
Change Period (Y+Rc), s		5.0		5.0		5.0		5.0
Max Green Setting (Gmax), s		19.0		21.0		19.0		21.0
Max Q Clear Time (g_c+I1), s		3.7		8.5		2.9		9.6
Green Ext Time (p_c), s		0.8		3.2		0.4		3.6

Intersection Summary	
HCM 2010 Ctrl Delay	10.7
HCM 2010 LOS	B

Intersection	
Int Delay, s/veh	4.9

Movement	EBL	EBT	EBR	WBL	WBT	WBR	NBL	NBT	NBR	SBL	SBT	SBR
Lane Configurations												
Traffic Vol, veh/h	6	18	11	35	37	38	19	122	9	17	58	17
Future Vol, veh/h	6	18	11	35	37	38	19	122	9	17	58	17
Conflicting Peds, #/hr	0	0	0	0	0	0	0	0	0	0	0	0
Sign Control	Stop	Stop	Stop	Stop	Stop	Stop	Free	Free	Free	Free	Free	Free
RT Channelized	-	-	None	-	-	None	-	-	None	-	-	None
Storage Length	-	-	-	-	-	-	-	-	0	-	-	0
Veh in Median Storage, #	-	0	-	-	0	-	-	0	-	-	0	-
Grade, %	-	0	-	-	0	-	-	0	-	-	0	-
Peak Hour Factor	92	92	92	92	92	92	92	92	92	92	92	92
Heavy Vehicles, %	2	2	2	2	2	2	2	2	2	2	2	2
Mvmt Flow	7	20	12	38	40	41	21	133	10	18	63	18

Major/Minor	Minor2			Minor1			Major1			Major2		
Conflicting Flow All	320	284	63	299	292	133	81	0	0	143	0	0
Stage 1	99	99	-	175	175	-	-	-	-	-	-	-
Stage 2	221	185	-	124	117	-	-	-	-	-	-	-
Critical Hdwy	7.12	6.52	6.22	7.12	6.52	6.22	4.12	-	-	4.12	-	-
Critical Hdwy Stg 1	6.12	5.52	-	6.12	5.52	-	-	-	-	-	-	-
Critical Hdwy Stg 2	6.12	5.52	-	6.12	5.52	-	-	-	-	-	-	-
Follow-up Hdwy	3.518	4.018	3.318	3.518	4.018	3.318	2.218	-	-	2.218	-	-
Pot Cap-1 Maneuver	633	625	1002	653	619	916	1517	-	-	1440	-	-
Stage 1	907	813	-	827	754	-	-	-	-	-	-	-
Stage 2	781	747	-	880	799	-	-	-	-	-	-	-
Platoon blocked, %								-	-		-	-
Mov Cap-1 Maneuver	561	608	1002	616	602	916	1517	-	-	1440	-	-
Mov Cap-2 Maneuver	561	608	-	616	602	-	-	-	-	-	-	-
Stage 1	893	802	-	815	743	-	-	-	-	-	-	-
Stage 2	695	736	-	837	789	-	-	-	-	-	-	-

Approach	EB	WB	NB	SB
HCM Control Delay, s	10.6	11.3	0.9	1.4
HCM LOS	B	B		

Minor Lane/Major Mvmt	NBL	NBT	NBR	EBLn1	WBLn1	SBL	SBT	SBR
Capacity (veh/h)	1517	-	-	683	689	1440	-	-
HCM Lane V/C Ratio	0.014	-	-	0.056	0.174	0.013	-	-
HCM Control Delay (s)	7.4	0	-	10.6	11.3	7.5	0	-
HCM Lane LOS	A	A	-	B	B	A	A	-
HCM 95th %tile Q(veh)	0	-	-	0.2	0.6	0	-	-

Movement	EBL	EBT	EBR	WBL	WBT	WBR	NBL	NBT	NBR	SBL	SBT	SBR
Lane Configurations												
Traffic Volume (veh/h)	19	66	19	18	244	21	44	85	21	17	91	44
Future Volume (veh/h)	19	66	19	18	244	21	44	85	21	17	91	44
Number	7	4	14	3	8	18	5	2	12	1	6	16
Initial Q (Qb), veh	0	0	0	0	0	0	0	0	0	0	0	0
Ped-Bike Adj(A_pbT)	1.00		1.00	1.00		1.00	1.00		1.00	1.00		1.00
Parking Bus, Adj	1.00	1.00	1.00	1.00	1.00	1.00	1.00	1.00	1.00	1.00	1.00	1.00
Adj Sat Flow, veh/h/ln	1863	1863	1863	1863	1863	1863	1900	1863	1900	1900	1863	1900
Adj Flow Rate, veh/h	21	72	21	20	265	23	48	92	23	18	99	48
Adj No. of Lanes	1	1	1	1	1	1	0	2	0	0	2	0
Peak Hour Factor	0.92	0.92	0.92	0.92	0.92	0.92	0.92	0.92	0.92	0.92	0.92	0.92
Percent Heavy Veh, %	2	2	2	2	2	2	2	2	2	2	2	2
Cap, veh/h	521	820	697	686	820	697	392	712	184	171	803	362
Arrive On Green	0.44	0.44	0.44	0.44	0.44	0.44	0.38	0.38	0.38	0.38	0.38	0.38
Sat Flow, veh/h	1087	1863	1583	1298	1863	1583	736	1874	484	222	2113	952
Grp Volume(v), veh/h	21	72	21	20	265	23	87	0	76	88	0	77
Grp Sat Flow(s),veh/h/ln	1087	1863	1583	1298	1863	1583	1485	0	1610	1760	0	1527
Q Serve(g_s), s	0.6	1.1	0.4	0.5	4.6	0.4	0.0	0.0	1.5	0.0	0.0	1.6
Cycle Q Clear(g_c), s	5.3	1.1	0.4	1.6	4.6	0.4	1.6	0.0	1.5	1.5	0.0	1.6
Prop In Lane	1.00		1.00	1.00		1.00	0.55		0.30	0.20		0.62
Lane Grp Cap(c), veh/h	521	820	697	686	820	697	676	0	612	755	0	580
V/C Ratio(X)	0.04	0.09	0.03	0.03	0.32	0.03	0.13	0.00	0.12	0.12	0.00	0.13
Avail Cap(c_a), veh/h	521	820	697	686	820	697	676	0	612	755	0	580
HCM Platoon Ratio	1.00	1.00	1.00	1.00	1.00	1.00	1.00	1.00	1.00	1.00	1.00	1.00
Upstream Filter(I)	1.00	1.00	1.00	0.85	0.85	0.85	0.84	0.00	0.84	1.00	0.00	1.00
Uniform Delay (d), s/veh	10.9	8.2	7.9	8.6	9.1	8.0	10.1	0.0	10.1	10.1	0.0	10.1
Incr Delay (d2), s/veh	0.0	0.0	0.0	0.0	0.1	0.0	0.3	0.0	0.4	0.3	0.0	0.5
Initial Q Delay(d3),s/veh	0.0	0.0	0.0	0.0	0.0	0.0	0.0	0.0	0.0	0.0	0.0	0.0
%ile BackOfQ(50%),veh/ln	0.2	0.6	0.2	0.2	2.4	0.2	0.8	0.0	0.7	0.8	0.0	0.8
LnGrp Delay(d),s/veh	10.9	8.2	8.0	8.6	9.2	8.0	10.4	0.0	10.4	10.4	0.0	10.6
LnGrp LOS	B	A	A	A	A	A	B		B	B		B
Approach Vol, veh/h		114			308			163			165	
Approach Delay, s/veh		8.6			9.1			10.4			10.5	
Approach LOS		A			A			B			B	

Timer	1	2	3	4	5	6	7	8
Assigned Phs		2		4		6		8
Phs Duration (G+Y+Rc), s		23.5		26.5		23.5		26.5
Change Period (Y+Rc), s		4.5		4.5		4.5		4.5
Max Green Setting (Gmax), s		19.0		22.0		19.0		22.0
Max Q Clear Time (g_c+I1), s		3.6		7.3		3.6		6.6
Green Ext Time (p_c), s		0.5		0.2		0.5		0.9

Intersection Summary	
HCM 2010 Ctrl Delay	9.6
HCM 2010 LOS	A

Movement	EBL	EBT	EBR	WBL	WBT	WBR	NBL	NBT	NBR	SBL	SBT	SBR
Lane Configurations												
Traffic Volume (veh/h)	85	999	50	14	1377	23	34	44	19	27	55	116
Future Volume (veh/h)	85	999	50	14	1377	23	34	44	19	27	55	116
Number	7	4	14	3	8	18	5	2	12	1	6	16
Initial Q (Qb), veh	0	0	0	0	0	0	0	0	0	0	0	0
Ped-Bike Adj(A_pbT)	1.00		1.00	1.00		1.00	1.00		1.00	1.00		1.00
Parking Bus, Adj	1.00	1.00	1.00	1.00	1.00	1.00	1.00	1.00	1.00	1.00	1.00	1.00
Adj Sat Flow, veh/h/ln	1863	1863	1900	1863	1863	1900	1900	1863	1900	1900	1863	1900
Adj Flow Rate, veh/h	92	1086	54	15	1497	25	37	48	21	29	60	126
Adj No. of Lanes	1	2	0	1	2	0	0	2	0	0	2	0
Peak Hour Factor	0.92	0.92	0.92	0.92	0.92	0.92	0.92	0.92	0.92	0.92	0.92	0.92
Percent Heavy Veh, %	2	2	2	2	2	2	2	2	2	2	2	2
Cap, veh/h	188	2071	103	286	2150	36	274	377	176	182	351	411
Arrive On Green	0.60	0.60	0.60	0.60	0.60	0.60	0.29	0.29	0.29	0.29	0.29	0.29
Sat Flow, veh/h	341	3432	171	491	3562	59	719	1320	617	450	1230	1441
Grp Volume(v), veh/h	92	560	580	15	743	779	52	0	54	89	0	126
Grp Sat Flow(s),veh/h/ln	341	1770	1833	491	1770	1852	1071	0	1586	1681	0	1441
Q Serve(g_s), s	22.7	16.5	16.5	1.6	25.8	25.9	1.7	0.0	2.3	0.0	0.0	6.2
Cycle Q Clear(g_c), s	48.6	16.5	16.5	18.2	25.8	25.9	7.8	0.0	2.3	3.2	0.0	6.2
Prop In Lane	1.00		0.09	1.00		0.03	0.71		0.39	0.33		1.00
Lane Grp Cap(c), veh/h	188	1068	1106	286	1068	1118	374	0	453	533	0	411
V/C Ratio(X)	0.49	0.52	0.52	0.05	0.70	0.70	0.14	0.00	0.12	0.17	0.00	0.31
Avail Cap(c_a), veh/h	194	1101	1140	296	1101	1153	374	0	453	533	0	411
HCM Platoon Ratio	1.00	1.00	1.00	1.00	1.00	1.00	1.00	1.00	1.00	1.00	1.00	1.00
Upstream Filter(I)	1.00	1.00	1.00	0.29	0.29	0.29	1.00	0.00	1.00	1.00	0.00	1.00
Uniform Delay (d), s/veh	28.9	10.3	10.4	15.6	12.2	12.2	26.1	0.0	23.8	24.1	0.0	25.2
Incr Delay (d2), s/veh	2.0	0.4	0.4	0.0	0.6	0.5	0.8	0.0	0.5	0.7	0.0	1.9
Initial Q Delay(d3),s/veh	0.0	0.0	0.0	0.0	0.0	0.0	0.0	0.0	0.0	0.0	0.0	0.0
%ile BackOfQ(50%),veh/ln	2.2	8.1	8.3	0.2	12.5	13.1	1.1	0.0	1.1	1.8	0.0	2.7
LnGrp Delay(d),s/veh	30.8	10.8	10.8	15.6	12.7	12.7	26.9	0.0	24.3	24.8	0.0	27.1
LnGrp LOS	C	B	B	B	B	B	C		C	C		C
Approach Vol, veh/h		1232			1537			106			215	
Approach Delay, s/veh		12.3			12.8			25.6			26.2	
Approach LOS		B			B			C			C	

Timer	1	2	3	4	5	6	7	8
Assigned Phs		2		4		6		8
Phs Duration (G+Y+Rc), s		30.7		59.3		30.7		59.3
Change Period (Y+Rc), s		5.0		5.0		5.0		5.0
Max Green Setting (Gmax), s		24.0		56.0		24.0		56.0
Max Q Clear Time (g_c+I1), s		9.8		50.6		8.2		27.9
Green Ext Time (p_c), s		0.4		3.7		1.1		13.9

Intersection Summary	
HCM 2010 Ctrl Delay	13.9
HCM 2010 LOS	B

APPENDIX E

Intersection Capacity Utilization Reports

Intersection Capacity Utilization
1: E Street & 9th Street

01-24-2024

Movement	EBL	EBT	EBR	WBL	WBT	WBR	NBL	NBT	NBR	SBL	SBT	SBR
Lane Configurations												
Volume (vph)	11	332	24	36	304	51	6	90	10	40	152	18
Pedestrians												
Ped Button												
Pedestrian Timing (s)												
Free Right			No			No			No			No
Ideal Flow	1600	1600	1600	1600	1600	1600	1600	1600	1600	1600	1600	1600
Lost Time (s)	4.0	5.0	4.0	4.0	5.0	4.0	4.0	5.1	4.0	4.0	5.1	4.0
Minimum Green (s)	7.0	6.0	4.0	8.0	6.0	4.0	8.0	10.0	4.0	9.0	10.0	4.0
Refr Cycle Length (s)	120	120	120	120	120	120	120	120	120	120	120	120
Volume Combined (vph)	11	356	0	36	355	0	6	100	0	40	170	0
Lane Utilization Factor	1.00	0.95	1.00	1.00	0.95	1.00	1.00	1.00	1.00	1.00	1.00	1.00
Turning Factor (vph)	0.95	0.99	0.85	0.95	0.98	0.85	0.95	0.98	0.85	0.95	0.98	0.85
Saturated Flow (vph)	1520	3016	0	1520	2981	0	1520	1576	0	1520	1575	0
Ped Intf Time (s)	0.0	0.0	0.0	0.0	0.0	0.0	0.0	0.0	0.0	0.0	0.0	0.0
Pedestrian Frequency (%)		0.00			0.00			0.00			0.00	
Protected Option Allowed		Yes			Yes			Yes			Yes	
Reference Time (s)	0.9	14.2	0.0	2.8	14.3	0.0	0.5	7.6	0.0	3.2	13.0	0.0
Adj Reference Time (s)	11.0	19.2	0.0	12.0	19.3	0.0	12.0	15.1	0.0	13.0	18.1	0.0
Permitted Option												
Adj Saturation A (vph)	101	1508		101	1490		101	1576		101	1575	
Reference Time A (s)	13.0	14.2		42.6	14.3		7.1	7.6		47.4	13.0	
Adj Saturation B (vph	NA	NA		NA	NA		NA	NA		0	1575	
Reference Time B (s)	NA	NA		NA	NA		NA	NA		11.2	13.0	
Reference Time (s)		14.2			42.6			7.6			13.0	
Adj Reference Time (s)		19.2			47.6			15.1			18.1	
Split Option												
Ref Time Combined (s)	0.9	14.2		2.8	14.3		0.5	7.6		3.2	13.0	
Ref Time Seperate (s)	0.9	13.2		2.8	12.2		0.5	6.9		3.2	11.6	
Reference Time (s)	14.2	14.2		14.3	14.3		7.6	7.6		13.0	13.0	
Adj Reference Time (s)	19.2	19.2		19.3	19.3		15.1	15.1		18.1	18.1	

Summary	EB WB	NB SB	Combined
Protected Option (s)	31.2	30.1	
Permitted Option (s)	47.6	18.1	
Split Option (s)	38.5	33.2	
Minimum (s)	31.2	18.1	49.2

Right Turns
Adj Reference Time (s)
Cross Thru Ref Time (s)
Oncoming Left Ref Time (s)
Combined (s)

Intersection Summary			
Intersection Capacity Utilization	41.0%	ICU Level of Service	A

Reference Times and Phasing Options do not represent an optimized timing plan.

This document was created by an application that isn't licensed to use novaPDF.
Purchase a license to generate PDF files without this notice.

Movement	EBL	EBT	EBR	WBL	WBT	WBR	NBL	NBT	NBR	SBL	SBT	SBR
Lane Configurations												
Volume (vph)	2	15	4	2	21	4	2	120	14	3	183	12
Pedestrians												
Ped Button												
Pedestrian Timing (s)												
Free Right			No			No			No			No
Ideal Flow	1600	1600	1600	1600	1600	1600	1600	1600	1600	1600	1600	1600
Lost Time (s)	4.6	4.6	4.0	4.6	4.6	4.0	4.0	5.0	4.0	4.0	5.0	4.0
Minimum Green (s)	7.0	7.0	4.0	7.0	7.0	4.0	8.0	10.0	4.0	9.0	10.0	4.0
Refr Cycle Length (s)	120	120	120	120	120	120	120	120	120	120	120	120
Volume Combined (vph)	0	21	0	0	27	0	2	134	0	3	195	0
Lane Utilization Factor	1.00	1.00	1.00	1.00	1.00	1.00	1.00	1.00	1.00	1.00	1.00	1.00
Turning Factor (vph)	0.95	0.97	0.85	0.95	0.97	0.85	0.95	0.98	0.85	0.95	0.99	0.85
Saturated Flow (vph)	0	1547	0	0	1559	0	1520	1575	0	1520	1585	0
Ped Intf Time (s)	0.0	0.0	0.0	0.0	0.0	0.0	0.0	0.0	0.0	0.0	0.0	0.0
Pedestrian Frequency (%)		0.00			0.00			0.00			0.00	
Protected Option Allowed		No			No			Yes			Yes	
Reference Time (s)			0.0			0.0	0.2	10.2	0.0	0.2	14.8	0.0
Adj Reference Time (s)			0.0			0.0	12.0	15.2	0.0	13.0	19.8	0.0
Permitted Option												
Adj Saturation A (vph)	0	1106		0	1256		101	1575		101	1585	
Reference Time A (s)	0.0	2.3		0.0	2.6		2.4	10.2		3.6	14.8	
Adj Saturation B (vph	0	0		0	0		NA	NA		NA	NA	
Reference Time B (s)	8.2	9.6		8.2	10.1		NA	NA		NA	NA	
Reference Time (s)		2.3			2.6			10.2			14.8	
Adj Reference Time (s)		11.6			11.6			15.2			19.8	
Split Option												
Ref Time Combined (s)	0.0	1.6		0.0	2.1		0.2	10.2		0.2	14.8	
Ref Time Seperate (s)	0.2	1.2		0.2	1.6		0.2	9.1		0.2	13.9	
Reference Time (s)	1.6	1.6		2.1	2.1		10.2	10.2		14.8	14.8	
Adj Reference Time (s)	11.6	11.6		11.6	11.6		15.2	15.2		19.8	19.8	

Summary	EB WB	NB SB	Combined
Protected Option (s)	NA	31.8	
Permitted Option (s)	11.6	19.8	
Split Option (s)	23.2	35.0	
Minimum (s)	11.6	19.8	31.4

Right Turns
Adj Reference Time (s)
Cross Thru Ref Time (s)
Oncoming Left Ref Time (s)
Combined (s)

Intersection Summary			
Intersection Capacity Utilization	26.1%	ICU Level of Service	A

Reference Times and Phasing Options do not represent an optimized timing plan.

This document was created by an application that isn't licensed to use novaPDF.
Purchase a license to generate PDF files without this notice.

Movement	EBL	EBT	EBR	WBL	WBT	WBR	NBL	NBT	NBR	SBL	SBT	SBR
Lane Configurations												
Volume (vph)	14	92	25	11	42	7	14	123	43	12	174	10
Pedestrians												
Ped Button												
Pedestrian Timing (s)												
Free Right			No			No			No			No
Ideal Flow	1900	1900	1900	1900	1900	1900	1900	1900	1900	1900	1900	1900
Lost Time (s)	5.0	5.0	4.0	5.0	5.0	4.0	4.0	5.0	4.0	4.0	5.0	4.0
Minimum Green (s)	7.0	7.0	4.0	7.0	7.0	4.0	8.0	10.0	4.0	9.0	10.0	4.0
Refr Cycle Length (s)	120	120	120	120	120	120	120	120	120	120	120	120
Volume Combined (vph)	14	117	0	11	49	0	14	166	0	12	184	0
Lane Utilization Factor	1.00	0.95	1.00	1.00	0.95	1.00	1.00	1.00	1.00	1.00	1.00	1.00
Turning Factor (vph)	0.95	0.97	0.85	0.95	0.98	0.85	0.95	0.96	0.85	0.95	0.99	0.85
Saturated Flow (vph)	1805	3502	0	1805	3540	0	1805	1826	0	1805	1885	0
Ped Intf Time (s)	0.0	0.0	0.0	0.0	0.0	0.0	0.0	0.0	0.0	0.0	0.0	0.0
Pedestrian Frequency (%)		0.00			0.00			0.00			0.00	
Protected Option Allowed		Yes			Yes			Yes			Yes	
Reference Time (s)	0.9	4.0	0.0	0.7	1.7	0.0	0.9	10.9	0.0	0.8	11.7	0.0
Adj Reference Time (s)	12.0	12.0	0.0	12.0	12.0	0.0	12.0	15.9	0.0	13.0	16.7	0.0
Permitted Option												
Adj Saturation A (vph)	120	1751		120	1770		120	1826		120	1885	
Reference Time A (s)	14.0	4.0		11.0	1.7		14.0	10.9		12.0	11.7	
Adj Saturation B (vph	0	3502		0	3540		NA	NA		NA	NA	
Reference Time B (s)	8.9	4.0		8.7	1.7		NA	NA		NA	NA	
Reference Time (s)		8.9			8.7			14.0			12.0	
Adj Reference Time (s)		13.9			13.7			19.0			17.0	
Split Option												
Ref Time Combined (s)	0.9	4.0		0.7	1.7		0.9	10.9		0.8	11.7	
Ref Time Seperate (s)	0.9	3.2		0.7	1.4		0.9	8.1		0.8	11.1	
Reference Time (s)	4.0	4.0		1.7	1.7		10.9	10.9		11.7	11.7	
Adj Reference Time (s)	12.0	12.0		12.0	12.0		15.9	15.9		16.7	16.7	

Summary	EB WB	NB SB	Combined
Protected Option (s)	24.0	28.9	
Permitted Option (s)	13.9	19.0	
Split Option (s)	24.0	32.6	
Minimum (s)	13.9	19.0	32.9

Right Turns
Adj Reference Time (s)
Cross Thru Ref Time (s)
Oncoming Left Ref Time (s)
Combined (s)

Intersection Summary			
Intersection Capacity Utilization	27.4%	ICU Level of Service	A

Reference Times and Phasing Options do not represent an optimized timing plan.

This document was created by an application that isn't licensed to use novaPDF.
Purchase a license to generate PDF files without this notice.

Movement	EBL	EBT	EBR	WBL	WBT	WBR	NBL	NBT	NBR	SBL	SBT	SBR
Lane Configurations												
Volume (vph)	85	1104	36	12	513	10	20	83	26	25	141	28
Pedestrians												
Ped Button												
Pedestrian Timing (s)												
Free Right			No			No			No			No
Ideal Flow	1900	1900	1900	1900	1900	1900	1900	1900	1900	1900	1900	1900
Lost Time (s)	5.0	5.0	4.0	5.0	5.0	4.0	4.0	6.0	4.0	4.0	6.0	4.0
Minimum Green (s)	9.0	9.0	4.0	9.0	9.0	4.0	9.0	9.0	4.0	9.0	9.0	4.0
Refr Cycle Length (s)	120	120	120	120	120	120	120	120	120	120	120	120
Volume Combined (vph)	85	1140	0	12	523	0	20	109	0	25	169	0
Lane Utilization Factor	1.00	0.95	1.00	1.00	0.95	1.00	1.00	1.00	1.00	1.00	1.00	1.00
Turning Factor (vph)	0.95	1.00	0.85	0.95	1.00	0.85	0.95	0.96	0.85	0.95	0.98	0.85
Saturated Flow (vph)	1805	3600	0	1805	3607	0	1805	1832	0	1805	1853	0
Ped Intf Time (s)	0.0	0.0	0.0	0.0	0.0	0.0	0.0	0.0	0.0	0.0	0.0	0.0
Pedestrian Frequency (%)		0.00			0.00			0.00			0.00	
Protected Option Allowed		Yes			Yes			Yes			Yes	
Reference Time (s)	5.7	38.0	0.0	0.8	17.4	0.0	1.3	7.1	0.0	1.7	10.9	0.0
Adj Reference Time (s)	14.0	43.0	0.0	14.0	22.4	0.0	13.0	15.0	0.0	13.0	16.9	0.0
Permitted Option												
Adj Saturation A (vph)	120	1800		120	1804		120	1832		120	1853	
Reference Time A (s)	84.8	38.0		12.0	17.4		19.9	7.1		24.9	10.9	
Adj Saturation B (vph	NA	NA		NA	NA		NA	NA		0	1853	
Reference Time B (s)	NA	NA		NA	NA		NA	NA		9.7	10.9	
Reference Time (s)		84.8			17.4			19.9			10.9	
Adj Reference Time (s)		89.8			22.4			25.9			16.9	
Split Option												
Ref Time Combined (s)	5.7	38.0		0.8	17.4		1.3	7.1		1.7	10.9	
Ref Time Seperate (s)	5.7	36.8		0.8	17.1		1.3	5.4		1.7	9.1	
Reference Time (s)	38.0	38.0		17.4	17.4		7.1	7.1		10.9	10.9	
Adj Reference Time (s)	43.0	43.0		22.4	22.4		15.0	15.0		16.9	16.9	

Summary	EB WB	NB SB	Combined
Protected Option (s)	57.0	29.9	
Permitted Option (s)	89.8	25.9	
Split Option (s)	65.4	31.9	
Minimum (s)	57.0	25.9	82.9

Right Turns
Adj Reference Time (s)
Cross Thru Ref Time (s)
Oncoming Left Ref Time (s)
Combined (s)

Intersection Summary			
Intersection Capacity Utilization	69.1%	ICU Level of Service	C

Reference Times and Phasing Options do not represent an optimized timing plan.

This document was created by an application that isn't licensed to use novaPDF.
Purchase a license to generate PDF files without this notice.

Movement	EBL	EBT	EBR	WBL	WBT	WBR	NBL	NBT	NBR	SBL	SBT	SBR
Lane Configurations												
Volume (vph)	7	349	63	22	284	16	8	25	10	10	64	12
Pedestrians												
Ped Button												
Pedestrian Timing (s)												
Free Right			No			No			No			No
Ideal Flow	1900	1900	1900	1900	1900	1900	1900	1900	1900	1900	1900	1900
Lost Time (s)	5.0	5.0	4.0	5.0	5.0	4.0	5.0	5.0	4.0	5.0	5.0	4.0
Minimum Green (s)	21.0	21.0	4.0	21.0	21.0	4.0	17.0	17.0	4.0	17.0	17.0	4.0
Refr Cycle Length (s)	120	120	120	120	120	120	120	120	120	120	120	120
Volume Combined (vph)	0	419	0	0	322	0	0	43	0	0	86	0
Lane Utilization Factor	1.00	0.95	1.00	1.00	0.95	1.00	1.00	0.95	1.00	1.00	0.95	1.00
Turning Factor (vph)	0.95	0.98	0.85	0.95	0.99	0.85	0.95	0.96	0.85	0.95	0.97	0.85
Saturated Flow (vph)	0	3533	0	0	3578	0	0	3459	0	0	3521	0
Ped Intf Time (s)	0.0	0.0	0.0	0.0	0.0	0.0	0.0	0.0	0.0	0.0	0.0	0.0
Pedestrian Frequency (%)		0.00			0.00			0.00			0.00	
Protected Option Allowed		No			No			No			No	
Reference Time (s)			0.0			0.0			0.0			0.0
Adj Reference Time (s)			0.0			0.0			0.0			0.0
Permitted Option												
Adj Saturation A (vph)	0	1168		0	465		0	115		0	227	
Reference Time A (s)	0.0	20.1		0.0	30.2		0.0	8.3		0.0	12.2	
Adj Saturation B (vph	NA	NA		NA	NA		0	1731		0	1766	
Reference Time B (s)	NA	NA		NA	NA		8.5	5.5		8.7	6.9	
Reference Time (s)		20.1			30.2			8.3			8.7	
Adj Reference Time (s)		26.0			35.2			22.0			22.0	
Split Option												
Ref Time Combined (s)	0.0	14.2		0.0	10.8		0.0	1.5		0.0	2.9	
Ref Time Seperate (s)	0.5	11.8		1.5	9.5		0.5	0.9		0.7	2.2	
Reference Time (s)	14.2	14.2		10.8	10.8		1.5	1.5		2.9	2.9	
Adj Reference Time (s)	26.0	26.0		26.0	26.0		22.0	22.0		22.0	22.0	

Summary	EB WB	NB SB	Combined
Protected Option (s)	NA	NA	
Permitted Option (s)	35.2	22.0	
Split Option (s)	52.0	44.0	
Minimum (s)	35.2	22.0	57.2

Right Turns
Adj Reference Time (s)
Cross Thru Ref Time (s)
Oncoming Left Ref Time (s)
Combined (s)

Intersection Summary			
Intersection Capacity Utilization	47.7%	ICU Level of Service	A

Reference Times and Phasing Options do not represent an optimized timing plan.

This document was created by an application that isn't licensed to use novaPDF.
Purchase a license to generate PDF files without this notice.

Movement	EBL	EBT	EBR	WBL	WBT	WBR	NBL	NBT	NBR	SBL	SBT	SBR
Lane Configurations												
Volume (vph)	3	9	23	18	9	5	10	53	9	4	134	2
Pedestrians												
Ped Button												
Pedestrian Timing (s)												
Free Right			No			No			No			No
Ideal Flow	1900	1900	1900	1900	1900	1900	1900	1900	1900	1900	1900	1900
Lost Time (s)	4.0	4.0	4.0	4.0	4.0	4.0	4.0	4.0	4.0	4.0	4.0	4.0
Minimum Green (s)	4.0	4.0	4.0	4.0	4.0	4.0	4.0	4.0	4.0	4.0	4.0	4.0
Refr Cycle Length (s)	120	120	120	120	120	120	120	120	120	120	120	120
Volume Combined (vph)	0	35	0	0	32	0	0	63	9	0	138	2
Lane Utilization Factor	1.00	1.00	1.00	1.00	1.00	1.00	1.00	1.00	1.00	1.00	1.00	1.00
Turning Factor (vph)	0.95	0.90	0.85	0.95	0.95	0.85	0.95	0.99	0.85	0.95	1.00	0.85
Saturated Flow (vph)	0	1705	0	0	1803	0	0	1885	1615	0	1897	1615
Ped Intf Time (s)	0.0	0.0	0.0	0.0	0.0	0.0	0.0	0.0	0.0	0.0	0.0	0.0
Pedestrian Frequency (%)		0.00			0.00			0.00			0.00	
Protected Option Allowed		No			No			No			No	
Reference Time (s)			0.0			0.0			0.7			0.1
Adj Reference Time (s)			0.0			0.0			8.0			8.0
Permitted Option												
Adj Saturation A (vph)	0	1713		0	459		0	557		0	1343	
Reference Time A (s)	0.0	2.5		0.0	8.4		0.0	13.6		0.0	12.3	
Adj Saturation B (vph	0	0		0	0		NA	NA		0	0	
Reference Time B (s)	8.2	10.5		9.2	10.1		NA	NA		8.3	16.7	
Reference Time (s)		2.5			8.4			13.6			12.3	
Adj Reference Time (s)		8.0			12.4			17.6			16.3	
Split Option												
Ref Time Combined (s)	0.0	2.5		0.0	2.1		0.0	4.0		0.0	8.7	
Ref Time Seperate (s)	0.2	0.6		1.2	0.6		0.7	3.3		0.3	8.5	
Reference Time (s)	2.5	2.5		2.1	2.1		4.0	4.0		8.7	8.7	
Adj Reference Time (s)	8.0	8.0		8.0	8.0		8.0	8.0		12.7	12.7	

Summary	EB WB	NB SB	Combined
Protected Option (s)	NA	NA	
Permitted Option (s)	12.4	17.6	
Split Option (s)	16.0	20.7	
Minimum (s)	12.4	17.6	29.9

Right Turns	NBR	SBR
Adj Reference Time (s)	8.0	8.0
Cross Thru Ref Time (s)	8.0	8.0
Oncoming Left Ref Time (s)	12.7	8.0
Combined (s)	28.7	24.0

Intersection Summary			
Intersection Capacity Utilization	25.0%	ICU Level of Service	A

Reference Times and Phasing Options do not represent an optimized timing plan.

This document was created by an application that isn't licensed to use novaPDF.
Purchase a license to generate PDF files without this notice.

Movement	EBL	EBT	EBR	WBL	WBT	WBR	NBL	NBT	NBR	SBL	SBT	SBR
Lane Configurations												
Volume (vph)	21	82	18	11	44	12	15	53	38	15	44	52
Pedestrians												
Ped Button												
Pedestrian Timing (s)												
Free Right			No			No			No			No
Ideal Flow	1900	1900	1900	1900	1900	1900	1900	1900	1900	1900	1900	1900
Lost Time (s)	4.5	4.5	4.5	4.5	4.5	4.5	4.5	4.5	4.0	4.5	4.5	4.0
Minimum Green (s)	22.0	22.0	22.0	22.0	22.0	22.0	19.0	19.0	4.0	19.0	19.0	4.0
Refr Cycle Length (s)	120	120	120	120	120	120	120	120	120	120	120	120
Volume Combined (vph)	21	82	18	11	44	12	0	106	0	0	111	0
Lane Utilization Factor	1.00	1.00	1.00	1.00	1.00	1.00	1.00	0.95	1.00	1.00	0.95	1.00
Turning Factor (vph)	0.95	1.00	0.85	0.95	1.00	0.85	0.95	0.94	0.85	0.95	0.92	0.85
Saturated Flow (vph)	1805	1900	1615	1805	1900	1615	0	3399	0	0	3341	0
Ped Intf Time (s)	0.0	0.0	0.0	0.0	0.0	0.0	0.0	0.0	0.0	0.0	0.0	0.0
Pedestrian Frequency (%)		0.00			0.00			0.00			0.00	
Protected Option Allowed		Yes			Yes			No			No	
Reference Time (s)	1.4	5.2	1.3	0.7	2.8	0.9			0.0			0.0
Adj Reference Time (s)	26.5	26.5	26.5	26.5	26.5	26.5			0.0			0.0
Permitted Option												
Adj Saturation A (vph)	120	1900		120	1900		0	155		0	166	
Reference Time A (s)	20.9	5.2		11.0	2.8		0.0	17.8		0.0	18.4	
Adj Saturation B (vph	0	1900		0	1900		0	1696		0	1662	
Reference Time B (s)	9.4	5.2		8.7	2.8		9.0	7.8		9.0	8.0	
Reference Time (s)		9.4			8.7			9.0			9.0	
Adj Reference Time (s)		26.5			26.5			23.5			23.5	
Split Option												
Ref Time Combined (s)	1.4	5.2		0.7	2.8		0.0	3.7		0.0	4.0	
Ref Time Seperate (s)	1.4	5.2		0.7	2.8		1.0	1.9		1.0	1.6	
Reference Time (s)	5.2	5.2		2.8	2.8		3.7	3.7		4.0	4.0	
Adj Reference Time (s)	26.5	26.5		26.5	26.5		23.5	23.5		23.5	23.5	

Summary	EB WB	NB SB	Combined
Protected Option (s)	53.0	NA	
Permitted Option (s)	26.5	23.5	
Split Option (s)	53.0	47.0	
Minimum (s)	26.5	23.5	50.0

Right Turns	EBR	WBR
Adj Reference Time (s)	26.5	26.5
Cross Thru Ref Time (s)	23.5	23.5
Oncoming Left Ref Time (s)	26.5	26.5
Combined (s)	76.5	76.5

Intersection Summary			
Intersection Capacity Utilization	63.7%	ICU Level of Service	B

Reference Times and Phasing Options do not represent an optimized timing plan.

This document was created by an application that isn't licensed to use novaPDF.
Purchase a license to generate PDF files without this notice.

Movement	EBL	EBT	EBR	WBL	WBT	WBR	NBL	NBT	NBR	SBL	SBT	SBR
Lane Configurations												
Volume (vph)	65	1236	6	6	540	20	4	17	5	12	20	11
Pedestrians												
Ped Button												
Pedestrian Timing (s)												
Free Right			No			No			No			No
Ideal Flow	1900	1900	1900	1900	1900	1900	1900	1900	1900	1900	1900	1900
Lost Time (s)	5.0	5.0	4.0	5.0	5.0	4.0	5.0	5.0	4.0	5.0	5.0	4.0
Minimum Green (s)	24.0	24.0	4.0	24.0	24.0	4.0	7.0	7.0	4.0	7.0	7.0	4.0
Refr Cycle Length (s)	120	120	120	120	120	120	120	120	120	120	120	120
Volume Combined (vph)	65	1242	0	6	560	0	0	26	0	0	43	0
Lane Utilization Factor	1.00	0.95	1.00	1.00	0.95	1.00	1.00	0.95	1.00	1.00	0.95	1.00
Turning Factor (vph)	0.95	1.00	0.85	0.95	0.99	0.85	0.95	0.96	0.85	0.95	0.95	0.85
Saturated Flow (vph)	1805	3615	0	1805	3598	0	0	3486	0	0	3430	0
Ped Intf Time (s)	0.0	0.0	0.0	0.0	0.0	0.0	0.0	0.0	0.0	0.0	0.0	0.0
Pedestrian Frequency (%)		0.00			0.00			0.00			0.00	
Protected Option Allowed		Yes			Yes			No			No	
Reference Time (s)	4.3	41.2	0.0	0.4	18.7	0.0			0.0			0.0
Adj Reference Time (s)	29.0	46.2	0.0	29.0	29.0	0.0			0.0			0.0
Permitted Option												
Adj Saturation A (vph)	120	1807		120	1799		0	136		0	114	
Reference Time A (s)	64.8	41.2		6.0	18.7		0.0	4.4		0.0	12.6	
Adj Saturation B (vph	NA	NA		NA	NA		0	1747		0	1713	
Reference Time B (s)	NA	NA		NA	NA		8.3	4.9		8.8	5.5	
Reference Time (s)		64.8			18.7			4.4			8.8	
Adj Reference Time (s)		69.8			29.0			12.0			13.8	
Split Option												
Ref Time Combined (s)	4.3	41.2		0.4	18.7		0.0	0.9		0.0	1.5	
Ref Time Seperate (s)	4.3	41.0		0.4	18.0		0.3	0.6		0.8	0.7	
Reference Time (s)	41.2	41.2		18.7	18.7		0.9	0.9		1.5	1.5	
Adj Reference Time (s)	46.2	46.2		29.0	29.0		12.0	12.0		12.0	12.0	

Summary	EB WB	NB SB	Combined
Protected Option (s)	75.2	NA	
Permitted Option (s)	69.8	13.8	
Split Option (s)	75.2	24.0	
Minimum (s)	69.8	13.8	83.6

Right Turns
Adj Reference Time (s)
Cross Thru Ref Time (s)
Oncoming Left Ref Time (s)
Combined (s)

Intersection Summary			
Intersection Capacity Utilization	69.7%	ICU Level of Service	C

Reference Times and Phasing Options do not represent an optimized timing plan.

This document was created by an application that isn't licensed to use novaPDF.
Purchase a license to generate PDF files without this notice.

Intersection Capacity Utilization
1: E Street & 9th Street

01-24-2024

Movement	EBL	EBT	EBR	WBL	WBT	WBR	NBL	NBT	NBR	SBL	SBT	SBR
Lane Configurations												
Volume (vph)	36	329	22	29	395	53	25	243	33	38	170	28
Pedestrians												
Ped Button												
Pedestrian Timing (s)												
Free Right			No			No			No			No
Ideal Flow	1600	1600	1600	1600	1600	1600	1600	1600	1600	1600	1600	1600
Lost Time (s)	4.0	5.0	4.0	4.0	5.0	4.0	4.0	5.1	4.0	4.0	5.1	4.0
Minimum Green (s)	7.0	6.0	4.0	8.0	6.0	4.0	8.0	10.0	4.0	9.0	10.0	4.0
Refr Cycle Length (s)	120	120	120	120	120	120	120	120	120	120	120	120
Volume Combined (vph)	36	351	0	29	448	0	25	276	0	38	198	0
Lane Utilization Factor	1.00	0.95	1.00	1.00	0.95	1.00	1.00	1.00	1.00	1.00	1.00	1.00
Turning Factor (vph)	0.95	0.99	0.85	0.95	0.98	0.85	0.95	0.98	0.85	0.95	0.98	0.85
Saturated Flow (vph)	1520	3018	0	1520	2992	0	1520	1571	0	1520	1566	0
Ped Intf Time (s)	0.0	0.0	0.0	0.0	0.0	0.0	0.0	0.0	0.0	0.0	0.0	0.0
Pedestrian Frequency (%)		0.00			0.00			0.00			0.00	
Protected Option Allowed		Yes			Yes			Yes			Yes	
Reference Time (s)	2.8	14.0	0.0	2.3	18.0	0.0	2.0	21.1	0.0	3.0	15.2	0.0
Adj Reference Time (s)	11.0	19.0	0.0	12.0	23.0	0.0	12.0	26.2	0.0	13.0	20.3	0.0
Permitted Option												
Adj Saturation A (vph)	101	1509		101	1496		101	1571		101	1566	
Reference Time A (s)	42.6	14.0		34.3	18.0		29.6	21.1		45.0	15.2	
Adj Saturation B (vph	NA	NA		NA	NA		NA	NA		NA	NA	
Reference Time B (s)	NA	NA		NA	NA		NA	NA		NA	NA	
Reference Time (s)		42.6			34.3			29.6			45.0	
Adj Reference Time (s)		47.6			39.3			34.7			50.1	
Split Option												
Ref Time Combined (s)	2.8	14.0		2.3	18.0		2.0	21.1		3.0	15.2	
Ref Time Seperate (s)	2.8	13.1		2.3	15.8		2.0	18.6		3.0	13.0	
Reference Time (s)	14.0	14.0		18.0	18.0		21.1	21.1		15.2	15.2	
Adj Reference Time (s)	19.0	19.0		23.0	23.0		26.2	26.2		20.3	20.3	

Summary	EB WB	NB SB	Combined
Protected Option (s)	34.0	39.2	
Permitted Option (s)	47.6	50.1	
Split Option (s)	41.9	46.4	
Minimum (s)	34.0	39.2	73.1

Right Turns
Adj Reference Time (s)
Cross Thru Ref Time (s)
Oncoming Left Ref Time (s)
Combined (s)

Intersection Summary			
Intersection Capacity Utilization	61.0%	ICU Level of Service	B

Reference Times and Phasing Options do not represent an optimized timing plan.

This document was created by an application that isn't licensed to use novaPDF.
Purchase a license to generate PDF files without this notice.

Movement	EBL	EBT	EBR	WBL	WBT	WBR	NBL	NBT	NBR	SBL	SBT	SBR
Lane Configurations												
Volume (vph)	17	25	11	9	23	14	17	277	9	4	217	8
Pedestrians												
Ped Button												
Pedestrian Timing (s)												
Free Right			No			No			No			No
Ideal Flow	1600	1600	1600	1600	1600	1600	1600	1600	1600	1600	1600	1600
Lost Time (s)	4.6	4.6	4.0	4.6	4.6	4.0	4.0	5.0	4.0	4.0	5.0	4.0
Minimum Green (s)	7.0	7.0	4.0	7.0	7.0	4.0	8.0	10.0	4.0	9.0	10.0	4.0
Refr Cycle Length (s)	120	120	120	120	120	120	120	120	120	120	120	120
Volume Combined (vph)	0	53	0	0	46	0	17	286	0	4	225	0
Lane Utilization Factor	1.00	1.00	1.00	1.00	1.00	1.00	1.00	1.00	1.00	1.00	1.00	1.00
Turning Factor (vph)	0.95	0.95	0.85	0.95	0.95	0.85	0.95	1.00	0.85	0.95	0.99	0.85
Saturated Flow (vph)	0	1525	0	0	1512	0	1520	1592	0	1520	1591	0
Ped Intf Time (s)	0.0	0.0	0.0	0.0	0.0	0.0	0.0	0.0	0.0	0.0	0.0	0.0
Pedestrian Frequency (%)		0.00			0.00			0.00			0.00	
Protected Option Allowed		No			No			Yes			Yes	
Reference Time (s)			0.0			0.0	1.3	21.6	0.0	0.3	17.0	0.0
Adj Reference Time (s)			0.0			0.0	12.0	26.6	0.0	13.0	22.0	0.0
Permitted Option												
Adj Saturation A (vph)	0	924		0	1310		101	1592		101	1591	
Reference Time A (s)	0.0	6.9		0.0	4.2		20.1	21.6		4.7	17.0	
Adj Saturation B (vph	0	0		0	0		NA	NA		NA	NA	
Reference Time B (s)	9.3	12.2		8.7	11.7		NA	NA		NA	NA	
Reference Time (s)		6.9			4.2			21.6			17.0	
Adj Reference Time (s)		11.6			11.6			26.6			22.0	
Split Option												
Ref Time Combined (s)	0.0	4.2		0.0	3.7		1.3	21.6		0.3	17.0	
Ref Time Seperate (s)	1.3	2.0		0.7	1.8		1.3	20.9		0.3	16.4	
Reference Time (s)	4.2	4.2		3.7	3.7		21.6	21.6		17.0	17.0	
Adj Reference Time (s)	11.6	11.6		11.6	11.6		26.6	26.6		22.0	22.0	

Summary	EB WB	NB SB	Combined
Protected Option (s)	NA	39.6	
Permitted Option (s)	11.6	26.6	
Split Option (s)	23.2	48.5	
Minimum (s)	11.6	26.6	38.2

Right Turns
Adj Reference Time (s)
Cross Thru Ref Time (s)
Oncoming Left Ref Time (s)
Combined (s)

Intersection Summary			
Intersection Capacity Utilization	31.8%	ICU Level of Service	A

Reference Times and Phasing Options do not represent an optimized timing plan.

This document was created by an application that isn't licensed to use novaPDF.
Purchase a license to generate PDF files without this notice.

Movement	EBL	EBT	EBR	WBL	WBT	WBR	NBL	NBT	NBR	SBL	SBT	SBR
Lane Configurations												
Volume (vph)	6	49	8	42	153	11	19	267	19	14	239	24
Pedestrians												
Ped Button												
Pedestrian Timing (s)												
Free Right			No			No			No			No
Ideal Flow	1900	1900	1900	1900	1900	1900	1900	1900	1900	1900	1900	1900
Lost Time (s)	5.0	5.0	4.0	5.0	5.0	4.0	4.0	5.0	4.0	4.0	5.0	4.0
Minimum Green (s)	7.0	7.0	4.0	7.0	7.0	4.0	8.0	10.0	4.0	9.0	10.0	4.0
Refr Cycle Length (s)	120	120	120	120	120	120	120	120	120	120	120	120
Volume Combined (vph)	6	57	0	42	164	0	19	286	0	14	263	0
Lane Utilization Factor	1.00	0.95	1.00	1.00	0.95	1.00	1.00	1.00	1.00	1.00	1.00	1.00
Turning Factor (vph)	0.95	0.98	0.85	0.95	0.99	0.85	0.95	0.99	0.85	0.95	0.99	0.85
Saturated Flow (vph)	1805	3541	0	1805	3581	0	1805	1881	0	1805	1874	0
Ped Intf Time (s)	0.0	0.0	0.0	0.0	0.0	0.0	0.0	0.0	0.0	0.0	0.0	0.0
Pedestrian Frequency (%)		0.00			0.00			0.00			0.00	
Protected Option Allowed		Yes			Yes			Yes			Yes	
Reference Time (s)	0.4	1.9	0.0	2.8	5.5	0.0	1.3	18.2	0.0	0.9	16.8	0.0
Adj Reference Time (s)	12.0	12.0	0.0	12.0	12.0	0.0	12.0	23.2	0.0	13.0	21.8	0.0
Permitted Option												
Adj Saturation A (vph)	120	1771		120	1791		120	1881		120	1874	
Reference Time A (s)	6.0	1.9		41.9	5.5		18.9	18.2		14.0	16.8	
Adj Saturation B (vph	NA	NA		0	3581		NA	NA		NA	NA	
Reference Time B (s)	NA	NA		10.8	5.5		NA	NA		NA	NA	
Reference Time (s)		6.0			10.8			18.9			16.8	
Adj Reference Time (s)		12.0			15.8			23.9			21.8	
Split Option												
Ref Time Combined (s)	0.4	1.9		2.8	5.5		1.3	18.2		0.9	16.8	
Ref Time Seperate (s)	0.4	1.7		2.8	5.1		1.3	17.0		0.9	15.3	
Reference Time (s)	1.9	1.9		5.5	5.5		18.2	18.2		16.8	16.8	
Adj Reference Time (s)	12.0	12.0		12.0	12.0		23.2	23.2		21.8	21.8	

Summary	EB WB	NB SB	Combined
Protected Option (s)	24.0	36.2	
Permitted Option (s)	15.8	23.9	
Split Option (s)	24.0	45.1	
Minimum (s)	15.8	23.9	39.7

Right Turns
Adj Reference Time (s)
Cross Thru Ref Time (s)
Oncoming Left Ref Time (s)
Combined (s)

Intersection Summary			
Intersection Capacity Utilization	33.1%	ICU Level of Service	A

Reference Times and Phasing Options do not represent an optimized timing plan.

This document was created by an application that isn't licensed to use novaPDF.
Purchase a license to generate PDF files without this notice.

Movement	EBL	EBT	EBR	WBL	WBT	WBR	NBL	NBT	NBR	SBL	SBT	SBR
Lane Configurations												
Volume (vph)	21	703	36	30	885	31	69	259	46	40	163	53
Pedestrians												
Ped Button												
Pedestrian Timing (s)												
Free Right			No			No			No			No
Ideal Flow	1900	1900	1900	1900	1900	1900	1900	1900	1900	1900	1900	1900
Lost Time (s)	5.0	5.0	4.0	5.0	5.0	4.0	4.0	6.0	4.0	4.0	6.0	4.0
Minimum Green (s)	9.0	9.0	4.0	9.0	9.0	4.0	9.0	9.0	4.0	9.0	9.0	4.0
Refr Cycle Length (s)	120	120	120	120	120	120	120	120	120	120	120	120
Volume Combined (vph)	21	739	0	30	916	0	69	305	0	40	216	0
Lane Utilization Factor	1.00	0.95	1.00	1.00	0.95	1.00	1.00	1.00	1.00	1.00	1.00	1.00
Turning Factor (vph)	0.95	0.99	0.85	0.95	0.99	0.85	0.95	0.98	0.85	0.95	0.96	0.85
Saturated Flow (vph)	1805	3591	0	1805	3599	0	1805	1857	0	1805	1830	0
Ped Intf Time (s)	0.0	0.0	0.0	0.0	0.0	0.0	0.0	0.0	0.0	0.0	0.0	0.0
Pedestrian Frequency (%)		0.00			0.00			0.00			0.00	
Protected Option Allowed		Yes			Yes			Yes			Yes	
Reference Time (s)	1.4	24.7	0.0	2.0	30.5	0.0	4.6	19.7	0.0	2.7	14.2	0.0
Adj Reference Time (s)	14.0	29.7	0.0	14.0	35.5	0.0	13.0	25.7	0.0	13.0	20.2	0.0
Permitted Option												
Adj Saturation A (vph)	120	1796		120	1800		120	1857		120	1830	
Reference Time A (s)	20.9	24.7		29.9	30.5		68.8	19.7		39.9	14.2	
Adj Saturation B (vph	NA	NA		NA	NA		NA	NA		NA	NA	
Reference Time B (s)	NA	NA		NA	NA		NA	NA		NA	NA	
Reference Time (s)		24.7			30.5			68.8			39.9	
Adj Reference Time (s)		29.7			35.5			74.8			45.9	
Split Option												
Ref Time Combined (s)	1.4	24.7		2.0	30.5		4.6	19.7		2.7	14.2	
Ref Time Seperate (s)	1.4	23.5		2.0	29.5		4.6	16.7		2.7	10.7	
Reference Time (s)	24.7	24.7		30.5	30.5		19.7	19.7		14.2	14.2	
Adj Reference Time (s)	29.7	29.7		35.5	35.5		25.7	25.7		20.2	20.2	

Summary	EB WB	NB SB	Combined
Protected Option (s)	49.5	38.7	
Permitted Option (s)	35.5	74.8	
Split Option (s)	65.2	45.9	
Minimum (s)	35.5	38.7	74.2

Right Turns
Adj Reference Time (s)
Cross Thru Ref Time (s)
Oncoming Left Ref Time (s)
Combined (s)

Intersection Summary			
Intersection Capacity Utilization	61.9%	ICU Level of Service	B

Reference Times and Phasing Options do not represent an optimized timing plan.

This document was created by an application that isn't licensed to use novaPDF.
Purchase a license to generate PDF files without this notice.

Movement	EBL	EBT	EBR	WBL	WBT	WBR	NBL	NBT	NBR	SBL	SBT	SBR
Lane Configurations												
Volume (vph)	12	364	28	8	439	18	33	63	14	9	25	20
Pedestrians												
Ped Button												
Pedestrian Timing (s)												
Free Right			No			No			No			No
Ideal Flow	1900	1900	1900	1900	1900	1900	1900	1900	1900	1900	1900	1900
Lost Time (s)	5.0	5.0	4.0	5.0	5.0	4.0	5.0	5.0	4.0	5.0	5.0	4.0
Minimum Green (s)	21.0	21.0	4.0	21.0	21.0	4.0	17.0	17.0	4.0	17.0	17.0	4.0
Refr Cycle Length (s)	120	120	120	120	120	120	120	120	120	120	120	120
Volume Combined (vph)	0	404	0	0	465	0	0	110	0	0	54	0
Lane Utilization Factor	1.00	0.95	1.00	1.00	0.95	1.00	1.00	0.95	1.00	1.00	0.95	1.00
Turning Factor (vph)	0.95	0.99	0.85	0.95	0.99	0.85	0.95	0.97	0.85	0.95	0.94	0.85
Saturated Flow (vph)	0	3575	0	0	3594	0	0	3495	0	0	3388	0
Ped Intf Time (s)	0.0	0.0	0.0	0.0	0.0	0.0	0.0	0.0	0.0	0.0	0.0	0.0
Pedestrian Frequency (%)		0.00			0.00			0.00			0.00	
Protected Option Allowed		No			No			No			No	
Reference Time (s)			0.0			0.0			0.0			0.0
Adj Reference Time (s)			0.0			0.0			0.0			0.0
Permitted Option												
Adj Saturation A (vph)	0	903		0	1175		0	117		0	113	
Reference Time A (s)	0.0	23.7		0.0	22.1		0.0	34.0		0.0	9.6	
Adj Saturation B (vph	NA	NA		NA	NA		0	1759		0	1688	
Reference Time B (s)	NA	NA		NA	NA		10.2	7.7		8.6	5.9	
Reference Time (s)		23.7			22.1			10.2			8.6	
Adj Reference Time (s)		28.7			27.1			22.0			22.0	
Split Option												
Ref Time Combined (s)	0.0	13.6		0.0	15.5		0.0	3.8		0.0	1.9	
Ref Time Seperate (s)	0.8	12.2		0.5	14.6		2.2	2.1		0.6	0.9	
Reference Time (s)	13.6	13.6		15.5	15.5		3.8	3.8		1.9	1.9	
Adj Reference Time (s)	26.0	26.0		26.0	26.0		22.0	22.0		22.0	22.0	

Summary	EB WB	NB SB	Combined
Protected Option (s)	NA	NA	
Permitted Option (s)	28.7	22.0	
Split Option (s)	52.0	44.0	
Minimum (s)	28.7	22.0	50.7

Right Turns
Adj Reference Time (s)
Cross Thru Ref Time (s)
Oncoming Left Ref Time (s)
Combined (s)

Intersection Summary			
Intersection Capacity Utilization	42.2%	ICU Level of Service	A

Reference Times and Phasing Options do not represent an optimized timing plan.

This document was created by an application that isn't licensed to use novaPDF.
Purchase a license to generate PDF files without this notice.

Movement	EBL	EBT	EBR	WBL	WBT	WBR	NBL	NBT	NBR	SBL	SBT	SBR
Lane Configurations												
Volume (vph)	3	12	7	16	25	26	13	84	5	11	34	11
Pedestrians												
Ped Button												
Pedestrian Timing (s)												
Free Right			No			No			No			No
Ideal Flow	1900	1900	1900	1900	1900	1900	1900	1900	1900	1900	1900	1900
Lost Time (s)	4.0	4.0	4.0	4.0	4.0	4.0	4.0	4.0	4.0	4.0	4.0	4.0
Minimum Green (s)	4.0	4.0	4.0	4.0	4.0	4.0	4.0	4.0	4.0	4.0	4.0	4.0
Refr Cycle Length (s)	120	120	120	120	120	120	120	120	120	120	120	120
Volume Combined (vph)	0	22	0	0	67	0	0	97	5	0	45	11
Lane Utilization Factor	1.00	1.00	1.00	1.00	1.00	1.00	1.00	1.00	1.00	1.00	1.00	1.00
Turning Factor (vph)	0.95	0.95	0.85	0.95	0.93	0.85	0.95	0.99	0.85	0.95	0.99	0.85
Saturated Flow (vph)	0	1797	0	0	1768	0	0	1887	1615	0	1877	1615
Ped Intf Time (s)	0.0	0.0	0.0	0.0	0.0	0.0	0.0	0.0	0.0	0.0	0.0	0.0
Pedestrian Frequency (%)		0.00			0.00			0.00			0.00	
Protected Option Allowed		No			No			No			No	
Reference Time (s)			0.0			0.0			0.4			0.8
Adj Reference Time (s)			0.0			0.0			8.0			8.0
Permitted Option												
Adj Saturation A (vph)	0	1548		0	1061		0	629		0	395	
Reference Time A (s)	0.0	1.7		0.0	7.6		0.0	18.5		0.0	13.7	
Adj Saturation B (vph	0	0		0	0		0	0		0	0	
Reference Time B (s)	8.2	9.5		9.1	12.5		8.9	14.2		8.7	10.9	
Reference Time (s)		1.7			7.6			14.2			10.9	
Adj Reference Time (s)		8.0			11.6			18.2			14.9	
Split Option												
Ref Time Combined (s)	0.0	1.5		0.0	4.5		0.0	6.2		0.0	2.9	
Ref Time Seperate (s)	0.2	0.8		1.1	1.7		0.9	5.3		0.7	2.1	
Reference Time (s)	1.5	1.5		4.5	4.5		6.2	6.2		2.9	2.9	
Adj Reference Time (s)	8.0	8.0		8.5	8.5		10.2	10.2		8.0	8.0	

Summary	EB WB	NB SB	Combined
Protected Option (s)	NA	NA	
Permitted Option (s)	11.6	18.2	
Split Option (s)	16.5	18.2	
Minimum (s)	11.6	18.2	29.7

Right Turns	NBR	SBR
Adj Reference Time (s)	8.0	8.0
Cross Thru Ref Time (s)	8.0	8.5
Oncoming Left Ref Time (s)	8.0	10.2
Combined (s)	24.0	26.7

Intersection Summary			
Intersection Capacity Utilization	24.8%	ICU Level of Service	A

Reference Times and Phasing Options do not represent an optimized timing plan.

This document was created by an application that isn't licensed to use novaPDF.
Purchase a license to generate PDF files without this notice.

Movement	EBL	EBT	EBR	WBL	WBT	WBR	NBL	NBT	NBR	SBL	SBT	SBR
Lane Configurations												
Volume (vph)	13	46	13	12	170	14	30	59	14	5	54	30
Pedestrians												
Ped Button												
Pedestrian Timing (s)												
Free Right			No			No			No			No
Ideal Flow	1900	1900	1900	1900	1900	1900	1900	1900	1900	1900	1900	1900
Lost Time (s)	4.5	4.5	4.5	4.5	4.5	4.5	4.5	4.5	4.0	4.5	4.5	4.0
Minimum Green (s)	22.0	22.0	22.0	22.0	22.0	22.0	19.0	19.0	4.0	19.0	19.0	4.0
Refr Cycle Length (s)	120	120	120	120	120	120	120	120	120	120	120	120
Volume Combined (vph)	13	46	13	12	170	14	0	103	0	0	89	0
Lane Utilization Factor	1.00	1.00	1.00	1.00	1.00	1.00	1.00	0.95	1.00	1.00	0.95	1.00
Turning Factor (vph)	0.95	1.00	0.85	0.95	1.00	0.85	0.95	0.97	0.85	0.95	0.95	0.85
Saturated Flow (vph)	1805	1900	1615	1805	1900	1615	0	3492	0	0	3425	0
Ped Intf Time (s)	0.0	0.0	0.0	0.0	0.0	0.0	0.0	0.0	0.0	0.0	0.0	0.0
Pedestrian Frequency (%)		0.00			0.00			0.00			0.00	
Protected Option Allowed		Yes			Yes			No			No	
Reference Time (s)	0.9	2.9	1.0	0.8	10.7	1.0			0.0			0.0
Adj Reference Time (s)	26.5	26.5	26.5	26.5	26.5	26.5			0.0			0.0
Permitted Option												
Adj Saturation A (vph)	120	1900		120	1900		0	116		0	540	
Reference Time A (s)	13.0	2.9		12.0	10.7		0.0	30.9		0.0	7.7	
Adj Saturation B (vph	NA	NA		0	1900		0	1757		0	1712	
Reference Time B (s)	NA	NA		8.8	10.7		10.0	7.5		8.3	7.1	
Reference Time (s)		13.0			10.7			10.0			7.7	
Adj Reference Time (s)		26.5			26.5			23.5			23.5	
Split Option												
Ref Time Combined (s)	0.9	2.9		0.8	10.7		0.0	3.5		0.0	3.1	
Ref Time Seperate (s)	0.9	2.9		0.8	10.7		2.0	2.0		0.3	1.9	
Reference Time (s)	2.9	2.9		10.7	10.7		3.5	3.5		3.1	3.1	
Adj Reference Time (s)	26.5	26.5		26.5	26.5		23.5	23.5		23.5	23.5	

Summary	EB WB	NB SB	Combined
Protected Option (s)	53.0	NA	
Permitted Option (s)	26.5	23.5	
Split Option (s)	53.0	47.0	
Minimum (s)	26.5	23.5	50.0

Right Turns	EBR	WBR
Adj Reference Time (s)	26.5	26.5
Cross Thru Ref Time (s)	23.5	23.5
Oncoming Left Ref Time (s)	26.5	26.5
Combined (s)	76.5	76.5

Intersection Summary			
Intersection Capacity Utilization	63.7%	ICU Level of Service	B

Reference Times and Phasing Options do not represent an optimized timing plan.

This document was created by an application that isn't licensed to use novaPDF.
Purchase a license to generate PDF files without this notice.

Movement	EBL	EBT	EBR	WBL	WBT	WBR	NBL	NBT	NBR	SBL	SBT	SBR
Lane Configurations												
Volume (vph)	59	694	34	9	964	16	23	30	13	18	35	74
Pedestrians												
Ped Button												
Pedestrian Timing (s)												
Free Right			No			No			No			No
Ideal Flow	1900	1900	1900	1900	1900	1900	1900	1900	1900	1900	1900	1900
Lost Time (s)	5.0	5.0	4.0	5.0	5.0	4.0	5.0	5.0	4.0	5.0	5.0	4.0
Minimum Green (s)	24.0	24.0	4.0	24.0	24.0	4.0	7.0	7.0	4.0	7.0	7.0	4.0
Refr Cycle Length (s)	120	120	120	120	120	120	120	120	120	120	120	120
Volume Combined (vph)	59	728	0	9	980	0	0	66	0	0	127	0
Lane Utilization Factor	1.00	0.95	1.00	1.00	0.95	1.00	1.00	0.95	1.00	1.00	0.95	1.00
Turning Factor (vph)	0.95	0.99	0.85	0.95	1.00	0.85	0.95	0.95	0.85	0.95	0.91	0.85
Saturated Flow (vph)	1805	3592	0	1805	3609	0	0	3450	0	0	3278	0
Ped Intf Time (s)	0.0	0.0	0.0	0.0	0.0	0.0	0.0	0.0	0.0	0.0	0.0	0.0
Pedestrian Frequency (%)		0.00			0.00			0.00			0.00	
Protected Option Allowed		Yes			Yes			No			No	
Reference Time (s)	3.9	24.3	0.0	0.6	32.6	0.0			0.0			0.0
Adj Reference Time (s)	29.0	29.3	0.0	29.0	37.6	0.0			0.0			0.0
Permitted Option												
Adj Saturation A (vph)	120	1796		120	1804		0	115		0	149	
Reference Time A (s)	58.8	24.3		9.0	32.6		0.0	24.0		0.0	22.1	
Adj Saturation B (vph	NA	NA		NA	NA		0	1727		0	1625	
Reference Time B (s)	NA	NA		NA	NA		9.5	6.3		9.2	8.7	
Reference Time (s)		58.8			32.6			9.5			9.2	
Adj Reference Time (s)		63.8			37.6			14.5			14.2	
Split Option												
Ref Time Combined (s)	3.9	24.3		0.6	32.6		0.0	2.3		0.0	4.6	
Ref Time Seperate (s)	3.9	23.2		0.6	32.1		1.5	1.0		1.2	1.3	
Reference Time (s)	24.3	24.3		32.6	32.6		2.3	2.3		4.6	4.6	
Adj Reference Time (s)	29.3	29.3		37.6	37.6		12.0	12.0		12.0	12.0	

Summary	EB WB	NB SB	Combined
Protected Option (s)	66.6	NA	
Permitted Option (s)	63.8	14.5	
Split Option (s)	66.9	24.0	
Minimum (s)	63.8	14.5	78.4

Right Turns
Adj Reference Time (s)
Cross Thru Ref Time (s)
Oncoming Left Ref Time (s)
Combined (s)

Intersection Summary			
Intersection Capacity Utilization	65.3%	ICU Level of Service	C

Reference Times and Phasing Options do not represent an optimized timing plan.

This document was created by an application that isn't licensed to use novaPDF.
Purchase a license to generate PDF files without this notice.

Intersection Capacity Utilization
1: E Street & 9th Street

01-24-2024

Movement	EBL	EBT	EBR	WBL	WBT	WBR	NBL	NBT	NBR	SBL	SBT	SBR
Lane Configurations												
Volume (vph)	12	353	26	39	323	55	7	96	11	43	162	20
Pedestrians												
Ped Button												
Pedestrian Timing (s)												
Free Right			No			No			No			No
Ideal Flow	1600	1600	1600	1600	1600	1600	1600	1600	1600	1600	1600	1600
Lost Time (s)	4.0	5.0	4.0	4.0	5.0	4.0	4.0	5.1	4.0	4.0	5.1	4.0
Minimum Green (s)	7.0	6.0	4.0	8.0	6.0	4.0	8.0	10.0	4.0	9.0	10.0	4.0
Refr Cycle Length (s)	120	120	120	120	120	120	120	120	120	120	120	120
Volume Combined (vph)	12	379	0	39	378	0	7	107	0	43	182	0
Lane Utilization Factor	1.00	0.95	1.00	1.00	0.95	1.00	1.00	1.00	1.00	1.00	1.00	1.00
Turning Factor (vph)	0.95	0.99	0.85	0.95	0.98	0.85	0.95	0.98	0.85	0.95	0.98	0.85
Saturated Flow (vph)	1520	3015	0	1520	2980	0	1520	1575	0	1520	1574	0
Ped Intf Time (s)	0.0	0.0	0.0	0.0	0.0	0.0	0.0	0.0	0.0	0.0	0.0	0.0
Pedestrian Frequency (%)		0.00			0.00			0.00			0.00	
Protected Option Allowed		Yes			Yes			Yes			Yes	
Reference Time (s)	0.9	15.1	0.0	3.1	15.2	0.0	0.6	8.2	0.0	3.4	13.9	0.0
Adj Reference Time (s)	11.0	20.1	0.0	12.0	20.2	0.0	12.0	15.1	0.0	13.0	19.0	0.0
Permitted Option												
Adj Saturation A (vph)	101	1508		101	1490		101	1575		101	1574	
Reference Time A (s)	14.2	15.1		46.2	15.2		8.3	8.2		50.9	13.9	
Adj Saturation B (vph	NA	NA		NA	NA		NA	NA		0	1574	
Reference Time B (s)	NA	NA		NA	NA		NA	NA		11.4	13.9	
Reference Time (s)		15.1			46.2			8.3			13.9	
Adj Reference Time (s)		20.1			51.2			15.1			19.0	
Split Option												
Ref Time Combined (s)	0.9	15.1		3.1	15.2		0.6	8.2		3.4	13.9	
Ref Time Seperate (s)	0.9	14.0		3.1	13.0		0.6	7.3		3.4	12.4	
Reference Time (s)	15.1	15.1		15.2	15.2		8.2	8.2		13.9	13.9	
Adj Reference Time (s)	20.1	20.1		20.2	20.2		15.1	15.1		19.0	19.0	

Summary	EB WB	NB SB	Combined
Protected Option (s)	32.1	31.0	
Permitted Option (s)	51.2	19.0	
Split Option (s)	40.3	34.1	
Minimum (s)	32.1	19.0	51.1

Right Turns
Adj Reference Time (s)
Cross Thru Ref Time (s)
Oncoming Left Ref Time (s)
Combined (s)

Intersection Summary			
Intersection Capacity Utilization	42.6%	ICU Level of Service	A

Reference Times and Phasing Options do not represent an optimized timing plan.

This document was created by an application that isn't licensed to use novaPDF.
Purchase a license to generate PDF files without this notice.

Movement	EBL	EBT	EBR	WBL	WBT	WBR	NBL	NBT	NBR	SBL	SBT	SBR
Lane Configurations												
Volume (vph)	3	16	5	3	23	5	3	128	15	4	195	13
Pedestrians												
Ped Button												
Pedestrian Timing (s)												
Free Right			No			No			No			No
Ideal Flow	1600	1600	1600	1600	1600	1600	1600	1600	1600	1600	1600	1600
Lost Time (s)	4.6	4.6	4.0	4.6	4.6	4.0	4.0	5.0	4.0	4.0	5.0	4.0
Minimum Green (s)	7.0	7.0	4.0	7.0	7.0	4.0	8.0	10.0	4.0	9.0	10.0	4.0
Refr Cycle Length (s)	120	120	120	120	120	120	120	120	120	120	120	120
Volume Combined (vph)	0	24	0	0	31	0	3	143	0	4	208	0
Lane Utilization Factor	1.00	1.00	1.00	1.00	1.00	1.00	1.00	1.00	1.00	1.00	1.00	1.00
Turning Factor (vph)	0.95	0.96	0.85	0.95	0.97	0.85	0.95	0.98	0.85	0.95	0.99	0.85
Saturated Flow (vph)	0	1540	0	0	1554	0	1520	1575	0	1520	1585	0
Ped Intf Time (s)	0.0	0.0	0.0	0.0	0.0	0.0	0.0	0.0	0.0	0.0	0.0	0.0
Pedestrian Frequency (%)		0.00			0.00			0.00			0.00	
Protected Option Allowed		No			No			Yes			Yes	
Reference Time (s)			0.0			0.0	0.2	10.9	0.0	0.3	15.7	0.0
Adj Reference Time (s)			0.0			0.0	12.0	15.9	0.0	13.0	20.7	0.0
Permitted Option												
Adj Saturation A (vph)	0	1078		0	1246		101	1575		101	1585	
Reference Time A (s)	0.0	2.7		0.0	3.0		3.6	10.9		4.7	15.7	
Adj Saturation B (vph	0	0		0	0		NA	NA		NA	NA	
Reference Time B (s)	8.2	9.9		8.2	10.4		NA	NA		NA	NA	
Reference Time (s)		2.7			3.0			10.9			15.7	
Adj Reference Time (s)		11.6			11.6			15.9			20.7	
Split Option												
Ref Time Combined (s)	0.0	1.9		0.0	2.4		0.2	10.9		0.3	15.7	
Ref Time Seperate (s)	0.2	1.2		0.2	1.8		0.2	9.8		0.3	14.8	
Reference Time (s)	1.9	1.9		2.4	2.4		10.9	10.9		15.7	15.7	
Adj Reference Time (s)	11.6	11.6		11.6	11.6		15.9	15.9		20.7	20.7	

Summary	EB WB	NB SB	Combined
Protected Option (s)	NA	32.7	
Permitted Option (s)	11.6	20.7	
Split Option (s)	23.2	36.6	
Minimum (s)	11.6	20.7	32.3

Right Turns
Adj Reference Time (s)
Cross Thru Ref Time (s)
Oncoming Left Ref Time (s)
Combined (s)

Intersection Summary			
Intersection Capacity Utilization	27.0%	ICU Level of Service	A

Reference Times and Phasing Options do not represent an optimized timing plan.

This document was created by an application that isn't licensed to use novaPDF.
Purchase a license to generate PDF files without this notice.

Movement	EBL	EBT	EBR	WBL	WBT	WBR	NBL	NBT	NBR	SBL	SBT	SBR
Lane Configurations												
Volume (vph)	15	98	27	12	45	8	15	131	46	13	185	11
Pedestrians												
Ped Button												
Pedestrian Timing (s)												
Free Right			No			No			No			No
Ideal Flow	1900	1900	1900	1900	1900	1900	1900	1900	1900	1900	1900	1900
Lost Time (s)	5.0	5.0	4.0	5.0	5.0	4.0	4.0	5.0	4.0	4.0	5.0	4.0
Minimum Green (s)	7.0	7.0	4.0	7.0	7.0	4.0	8.0	10.0	4.0	9.0	10.0	4.0
Refr Cycle Length (s)	120	120	120	120	120	120	120	120	120	120	120	120
Volume Combined (vph)	15	125	0	12	53	0	15	177	0	13	196	0
Lane Utilization Factor	1.00	0.95	1.00	1.00	0.95	1.00	1.00	1.00	1.00	1.00	1.00	1.00
Turning Factor (vph)	0.95	0.97	0.85	0.95	0.98	0.85	0.95	0.96	0.85	0.95	0.99	0.85
Saturated Flow (vph)	1805	3500	0	1805	3536	0	1805	1826	0	1805	1884	0
Ped Intf Time (s)	0.0	0.0	0.0	0.0	0.0	0.0	0.0	0.0	0.0	0.0	0.0	0.0
Pedestrian Frequency (%)		0.00			0.00			0.00			0.00	
Protected Option Allowed		Yes			Yes			Yes			Yes	
Reference Time (s)	1.0	4.3	0.0	0.8	1.8	0.0	1.0	11.6	0.0	0.9	12.5	0.0
Adj Reference Time (s)	12.0	12.0	0.0	12.0	12.0	0.0	12.0	16.6	0.0	13.0	17.5	0.0
Permitted Option												
Adj Saturation A (vph)	120	1750		120	1768		120	1826		120	1884	
Reference Time A (s)	15.0	4.3		12.0	1.8		15.0	11.6		13.0	12.5	
Adj Saturation B (vph	0	3500		NA	NA		NA	NA		NA	NA	
Reference Time B (s)	9.0	4.3		NA	NA		NA	NA		NA	NA	
Reference Time (s)		9.0			12.0			15.0			13.0	
Adj Reference Time (s)		14.0			17.0			20.0			18.0	
Split Option												
Ref Time Combined (s)	1.0	4.3		0.8	1.8		1.0	11.6		0.9	12.5	
Ref Time Seperate (s)	1.0	3.4		0.8	1.5		1.0	8.6		0.9	11.8	
Reference Time (s)	4.3	4.3		1.8	1.8		11.6	11.6		12.5	12.5	
Adj Reference Time (s)	12.0	12.0		12.0	12.0		16.6	16.6		17.5	17.5	

Summary	EB WB	NB SB	Combined
Protected Option (s)	24.0	29.6	
Permitted Option (s)	17.0	20.0	
Split Option (s)	24.0	34.1	
Minimum (s)	17.0	20.0	36.9

Right Turns
Adj Reference Time (s)
Cross Thru Ref Time (s)
Oncoming Left Ref Time (s)
Combined (s)

Intersection Summary			
Intersection Capacity Utilization	30.8%	ICU Level of Service	A

Reference Times and Phasing Options do not represent an optimized timing plan.

This document was created by an application that isn't licensed to use novaPDF.
Purchase a license to generate PDF files without this notice.

Movement	EBL	EBT	EBR	WBL	WBT	WBR	NBL	NBT	NBR	SBL	SBT	SBR
Lane Configurations												
Volume (vph)	91	1172	39	13	545	11	22	89	28	27	150	30
Pedestrians												
Ped Button												
Pedestrian Timing (s)												
Free Right			No			No			No			No
Ideal Flow	1900	1900	1900	1900	1900	1900	1900	1900	1900	1900	1900	1900
Lost Time (s)	5.0	5.0	4.0	5.0	5.0	4.0	4.0	6.0	4.0	4.0	6.0	4.0
Minimum Green (s)	9.0	9.0	4.0	9.0	9.0	4.0	9.0	9.0	4.0	9.0	9.0	4.0
Refr Cycle Length (s)	120	120	120	120	120	120	120	120	120	120	120	120
Volume Combined (vph)	91	1211	0	13	556	0	22	117	0	27	180	0
Lane Utilization Factor	1.00	0.95	1.00	1.00	0.95	1.00	1.00	1.00	1.00	1.00	1.00	1.00
Turning Factor (vph)	0.95	1.00	0.85	0.95	1.00	0.85	0.95	0.96	0.85	0.95	0.97	0.85
Saturated Flow (vph)	1805	3600	0	1805	3607	0	1805	1832	0	1805	1853	0
Ped Intf Time (s)	0.0	0.0	0.0	0.0	0.0	0.0	0.0	0.0	0.0	0.0	0.0	0.0
Pedestrian Frequency (%)		0.00			0.00			0.00			0.00	
Protected Option Allowed		Yes			Yes			Yes			Yes	
Reference Time (s)	6.0	40.4	0.0	0.9	18.5	0.0	1.5	7.7	0.0	1.8	11.7	0.0
Adj Reference Time (s)	14.0	45.4	0.0	14.0	23.5	0.0	13.0	15.0	0.0	13.0	17.7	0.0
Permitted Option												
Adj Saturation A (vph)	120	1800		120	1803		120	1832		120	1853	
Reference Time A (s)	90.7	40.4		13.0	18.5		21.9	7.7		26.9	11.7	
Adj Saturation B (vph	NA	NA		NA	NA		NA	NA		0	1853	
Reference Time B (s)	NA	NA		NA	NA		NA	NA		9.8	11.7	
Reference Time (s)		90.7			18.5			21.9			11.7	
Adj Reference Time (s)		95.7			23.5			27.9			17.7	
Split Option												
Ref Time Combined (s)	6.0	40.4		0.9	18.5		1.5	7.7		1.8	11.7	
Ref Time Seperate (s)	6.0	39.1		0.9	18.1		1.5	5.8		1.8	9.7	
Reference Time (s)	40.4	40.4		18.5	18.5		7.7	7.7		11.7	11.7	
Adj Reference Time (s)	45.4	45.4		23.5	23.5		15.0	15.0		17.7	17.7	

Summary	EB WB	NB SB	Combined
Protected Option (s)	59.4	30.7	
Permitted Option (s)	95.7	27.9	
Split Option (s)	68.9	32.7	
Minimum (s)	59.4	27.9	87.3

Right Turns
Adj Reference Time (s)
Cross Thru Ref Time (s)
Oncoming Left Ref Time (s)
Combined (s)

Intersection Summary			
Intersection Capacity Utilization	72.8%	ICU Level of Service	C

Reference Times and Phasing Options do not represent an optimized timing plan.

This document was created by an application that isn't licensed to use novaPDF.
Purchase a license to generate PDF files without this notice.

Movement	EBL	EBT	EBR	WBL	WBT	WBR	NBL	NBT	NBR	SBL	SBT	SBR
Lane Configurations												
Volume (vph)	8	371	67	24	302	17	9	27	11	11	68	13
Pedestrians												
Ped Button												
Pedestrian Timing (s)												
Free Right			No			No			No			No
Ideal Flow	1900	1900	1900	1900	1900	1900	1900	1900	1900	1900	1900	1900
Lost Time (s)	5.0	5.0	4.0	5.0	5.0	4.0	5.0	5.0	4.0	5.0	5.0	4.0
Minimum Green (s)	21.0	21.0	4.0	21.0	21.0	4.0	17.0	17.0	4.0	17.0	17.0	4.0
Refr Cycle Length (s)	120	120	120	120	120	120	120	120	120	120	120	120
Volume Combined (vph)	0	446	0	0	343	0	0	47	0	0	92	0
Lane Utilization Factor	1.00	0.95	1.00	1.00	0.95	1.00	1.00	0.95	1.00	1.00	0.95	1.00
Turning Factor (vph)	0.95	0.98	0.85	0.95	0.99	0.85	0.95	0.96	0.85	0.95	0.97	0.85
Saturated Flow (vph)	0	3533	0	0	3578	0	0	3457	0	0	3520	0
Ped Intf Time (s)	0.0	0.0	0.0	0.0	0.0	0.0	0.0	0.0	0.0	0.0	0.0	0.0
Pedestrian Frequency (%)		0.00			0.00			0.00			0.00	
Protected Option Allowed		No			No			No			No	
Reference Time (s)			0.0			0.0			0.0			0.0
Adj Reference Time (s)			0.0			0.0			0.0			0.0
Permitted Option												
Adj Saturation A (vph)	0	1137		0	453		0	115		0	217	
Reference Time A (s)	0.0	21.8		0.0	32.7		0.0	9.4		0.0	13.3	
Adj Saturation B (vph	NA	NA		NA	NA		0	1730		0	1765	
Reference Time B (s)	NA	NA		NA	NA		8.6	5.6		8.7	7.1	
Reference Time (s)		21.8			32.7			8.6			8.7	
Adj Reference Time (s)		26.8			37.7			22.0			22.0	
Split Option												
Ref Time Combined (s)	0.0	15.1		0.0	11.5		0.0	1.6		0.0	3.1	
Ref Time Seperate (s)	0.5	12.6		1.6	10.1		0.6	0.9		0.7	2.3	
Reference Time (s)	15.1	15.1		11.5	11.5		1.6	1.6		3.1	3.1	
Adj Reference Time (s)	26.0	26.0		26.0	26.0		22.0	22.0		22.0	22.0	

Summary	EB WB	NB SB	Combined
Protected Option (s)	NA	NA	
Permitted Option (s)	37.7	22.0	
Split Option (s)	52.0	44.0	
Minimum (s)	37.7	22.0	59.7

Right Turns
Adj Reference Time (s)
Cross Thru Ref Time (s)
Oncoming Left Ref Time (s)
Combined (s)

Intersection Summary			
Intersection Capacity Utilization	49.8%	ICU Level of Service	A

Reference Times and Phasing Options do not represent an optimized timing plan.

This document was created by an application that isn't licensed to use novaPDF.
Purchase a license to generate PDF files without this notice.

Movement	EBL	EBT	EBR	WBL	WBT	WBR	NBL	NBT	NBR	SBL	SBT	SBR
Lane Configurations												
Volume (vph)	4	10	25	20	10	6	11	57	10	5	143	3
Pedestrians												
Ped Button												
Pedestrian Timing (s)												
Free Right			No			No			No			No
Ideal Flow	1900	1900	1900	1900	1900	1900	1900	1900	1900	1900	1900	1900
Lost Time (s)	4.0	4.0	4.0	4.0	4.0	4.0	4.0	4.0	4.0	4.0	4.0	4.0
Minimum Green (s)	4.0	4.0	4.0	4.0	4.0	4.0	4.0	4.0	4.0	4.0	4.0	4.0
Refr Cycle Length (s)	120	120	120	120	120	120	120	120	120	120	120	120
Volume Combined (vph)	0	39	0	0	36	0	0	68	10	0	148	3
Lane Utilization Factor	1.00	1.00	1.00	1.00	1.00	1.00	1.00	1.00	1.00	1.00	1.00	1.00
Turning Factor (vph)	0.95	0.90	0.85	0.95	0.95	0.85	0.95	0.99	0.85	0.95	1.00	0.85
Saturated Flow (vph)	0	1709	0	0	1801	0	0	1885	1615	0	1897	1615
Ped Intf Time (s)	0.0	0.0	0.0	0.0	0.0	0.0	0.0	0.0	0.0	0.0	0.0	0.0
Pedestrian Frequency (%)		0.00			0.00			0.00			0.00	
Protected Option Allowed		No			No			No			No	
Reference Time (s)			0.0			0.0			0.7			0.2
Adj Reference Time (s)			0.0			0.0			8.0			8.0
Permitted Option												
Adj Saturation A (vph)	0	1712		0	513		0	549		0	1279	
Reference Time A (s)	0.0	2.7		0.0	8.4		0.0	14.9		0.0	13.9	
Adj Saturation B (vph	0	0		0	0		NA	NA		0	0	
Reference Time B (s)	8.3	10.7		9.3	10.4		NA	NA		8.3	17.4	
Reference Time (s)		2.7			8.4			14.9			13.9	
Adj Reference Time (s)		8.0			12.4			18.9			17.9	
Split Option												
Ref Time Combined (s)	0.0	2.7		0.0	2.4		0.0	4.3		0.0	9.4	
Ref Time Seperate (s)	0.3	0.7		1.3	0.7		0.7	3.6		0.3	9.0	
Reference Time (s)	2.7	2.7		2.4	2.4		4.3	4.3		9.4	9.4	
Adj Reference Time (s)	8.0	8.0		8.0	8.0		8.3	8.3		13.4	13.4	

Summary	EB WB	NB SB	Combined
Protected Option (s)	NA	NA	
Permitted Option (s)	12.4	18.9	
Split Option (s)	16.0	21.7	
Minimum (s)	12.4	18.9	31.3

Right Turns	NBR	SBR
Adj Reference Time (s)	8.0	8.0
Cross Thru Ref Time (s)	8.0	8.0
Oncoming Left Ref Time (s)	13.4	8.3
Combined (s)	29.4	24.3

Intersection Summary			
Intersection Capacity Utilization	26.1%	ICU Level of Service	A

Reference Times and Phasing Options do not represent an optimized timing plan.

This document was created by an application that isn't licensed to use novaPDF.
Purchase a license to generate PDF files without this notice.

Movement	EBL	EBT	EBR	WBL	WBT	WBR	NBL	NBT	NBR	SBL	SBT	SBR
Lane Configurations												
Volume (vph)	23	87	20	12	47	13	16	57	41	16	47	56
Pedestrians												
Ped Button												
Pedestrian Timing (s)												
Free Right			No			No			No			No
Ideal Flow	1900	1900	1900	1900	1900	1900	1900	1900	1900	1900	1900	1900
Lost Time (s)	4.5	4.5	4.5	4.5	4.5	4.5	4.5	4.5	4.0	4.5	4.5	4.0
Minimum Green (s)	22.0	22.0	22.0	22.0	22.0	22.0	19.0	19.0	4.0	19.0	19.0	4.0
Refr Cycle Length (s)	120	120	120	120	120	120	120	120	120	120	120	120
Volume Combined (vph)	23	87	20	12	47	13	0	114	0	0	119	0
Lane Utilization Factor	1.00	1.00	1.00	1.00	1.00	1.00	1.00	0.95	1.00	1.00	0.95	1.00
Turning Factor (vph)	0.95	1.00	0.85	0.95	1.00	0.85	0.95	0.94	0.85	0.95	0.92	0.85
Saturated Flow (vph)	1805	1900	1615	1805	1900	1615	0	3398	0	0	3340	0
Ped Intf Time (s)	0.0	0.0	0.0	0.0	0.0	0.0	0.0	0.0	0.0	0.0	0.0	0.0
Pedestrian Frequency (%)		0.00			0.00			0.00			0.00	
Protected Option Allowed		Yes			Yes			No			No	
Reference Time (s)	1.5	5.5	1.5	0.8	3.0	1.0			0.0			0.0
Adj Reference Time (s)	26.5	26.5	26.5	26.5	26.5	26.5			0.0			0.0
Permitted Option												
Adj Saturation A (vph)	120	1900		120	1900		0	158		0	168	
Reference Time A (s)	22.9	5.5		12.0	3.0		0.0	19.0		0.0	19.7	
Adj Saturation B (vph	0	1900		0	1900		0	1695		0	1661	
Reference Time B (s)	9.5	5.5		8.8	3.0		9.1	8.0		9.1	8.3	
Reference Time (s)		9.5			8.8			9.1			9.1	
Adj Reference Time (s)		26.5			26.5			23.5			23.5	
Split Option												
Ref Time Combined (s)	1.5	5.5		0.8	3.0		0.0	4.0		0.0	4.3	
Ref Time Seperate (s)	1.5	5.5		0.8	3.0		1.1	2.0		1.1	1.7	
Reference Time (s)	5.5	5.5		3.0	3.0		4.0	4.0		4.3	4.3	
Adj Reference Time (s)	26.5	26.5		26.5	26.5		23.5	23.5		23.5	23.5	

Summary	EB WB	NB SB	Combined
Protected Option (s)	53.0	NA	
Permitted Option (s)	26.5	23.5	
Split Option (s)	53.0	47.0	
Minimum (s)	26.5	23.5	50.0

Right Turns	EBR	WBR
Adj Reference Time (s)	26.5	26.5
Cross Thru Ref Time (s)	23.5	23.5
Oncoming Left Ref Time (s)	26.5	26.5
Combined (s)	76.5	76.5

Intersection Summary			
Intersection Capacity Utilization	63.7%	ICU Level of Service	B

Reference Times and Phasing Options do not represent an optimized timing plan.

This document was created by an application that isn't licensed to use novaPDF.
Purchase a license to generate PDF files without this notice.

Movement	EBL	EBT	EBR	WBL	WBT	WBR	NBL	NBT	NBR	SBL	SBT	SBR
Lane Configurations												
Volume (vph)	69	1312	7	7	573	22	5	19	6	13	22	12
Pedestrians												
Ped Button												
Pedestrian Timing (s)												
Free Right			No			No			No			No
Ideal Flow	1900	1900	1900	1900	1900	1900	1900	1900	1900	1900	1900	1900
Lost Time (s)	5.0	5.0	4.0	5.0	5.0	4.0	5.0	5.0	4.0	5.0	5.0	4.0
Minimum Green (s)	24.0	24.0	4.0	24.0	24.0	4.0	7.0	7.0	4.0	7.0	7.0	4.0
Refr Cycle Length (s)	120	120	120	120	120	120	120	120	120	120	120	120
Volume Combined (vph)	69	1319	0	7	595	0	0	30	0	0	47	0
Lane Utilization Factor	1.00	0.95	1.00	1.00	0.95	1.00	1.00	0.95	1.00	1.00	0.95	1.00
Turning Factor (vph)	0.95	1.00	0.85	0.95	0.99	0.85	0.95	0.96	0.85	0.95	0.95	0.85
Saturated Flow (vph)	1805	3615	0	1805	3598	0	0	3480	0	0	3431	0
Ped Intf Time (s)	0.0	0.0	0.0	0.0	0.0	0.0	0.0	0.0	0.0	0.0	0.0	0.0
Pedestrian Frequency (%)		0.00			0.00			0.00			0.00	
Protected Option Allowed		Yes			Yes			No			No	
Reference Time (s)	4.6	43.8	0.0	0.5	19.8	0.0			0.0			0.0
Adj Reference Time (s)	29.0	48.8	0.0	29.0	29.0	0.0			0.0			0.0
Permitted Option												
Adj Saturation A (vph)	120	1807		120	1799		0	116		0	114	
Reference Time A (s)	68.8	43.8		7.0	19.8		0.0	5.2		0.0	13.6	
Adj Saturation B (vph	NA	NA		NA	NA		0	1744		0	1713	
Reference Time B (s)	NA	NA		NA	NA		8.3	5.0		8.9	5.6	
Reference Time (s)		68.8			19.8			5.2			8.9	
Adj Reference Time (s)		73.8			29.0			12.0			13.9	
Split Option												
Ref Time Combined (s)	4.6	43.8		0.5	19.8		0.0	1.0		0.0	1.6	
Ref Time Seperate (s)	4.6	43.6		0.5	19.1		0.3	0.7		0.9	0.8	
Reference Time (s)	43.8	43.8		19.8	19.8		1.0	1.0		1.6	1.6	
Adj Reference Time (s)	48.8	48.8		29.0	29.0		12.0	12.0		12.0	12.0	

Summary	EB WB	NB SB	Combined
Protected Option (s)	77.8	NA	
Permitted Option (s)	73.8	13.9	
Split Option (s)	77.8	24.0	
Minimum (s)	73.8	13.9	87.7

Right Turns
Adj Reference Time (s)
Cross Thru Ref Time (s)
Oncoming Left Ref Time (s)
Combined (s)

Intersection Summary			
Intersection Capacity Utilization	73.1%	ICU Level of Service	D

Reference Times and Phasing Options do not represent an optimized timing plan.

This document was created by an application that isn't licensed to use novaPDF.
Purchase a license to generate PDF files without this notice.

Intersection Capacity Utilization
1: E Street & 9th Street

01-24-2024

Movement	EBL	EBT	EBR	WBL	WBT	WBR	NBL	NBT	NBR	SBL	SBT	SBR
Lane Configurations												
Volume (vph)	39	350	24	31	420	57	27	258	36	41	181	30
Pedestrians												
Ped Button												
Pedestrian Timing (s)												
Free Right			No			No			No			No
Ideal Flow	1600	1600	1600	1600	1600	1600	1600	1600	1600	1600	1600	1600
Lost Time (s)	4.0	5.0	4.0	4.0	5.0	4.0	4.0	5.1	4.0	4.0	5.1	4.0
Minimum Green (s)	7.0	6.0	4.0	8.0	6.0	4.0	8.0	10.0	4.0	9.0	10.0	4.0
Refr Cycle Length (s)	120	120	120	120	120	120	120	120	120	120	120	120
Volume Combined (vph)	39	374	0	31	477	0	27	294	0	41	211	0
Lane Utilization Factor	1.00	0.95	1.00	1.00	0.95	1.00	1.00	1.00	1.00	1.00	1.00	1.00
Turning Factor (vph)	0.95	0.99	0.85	0.95	0.98	0.85	0.95	0.98	0.85	0.95	0.98	0.85
Saturated Flow (vph)	1520	3017	0	1520	2992	0	1520	1571	0	1520	1566	0
Ped Intf Time (s)	0.0	0.0	0.0	0.0	0.0	0.0	0.0	0.0	0.0	0.0	0.0	0.0
Pedestrian Frequency (%)		0.00			0.00			0.00			0.00	
Protected Option Allowed		Yes			Yes			Yes			Yes	
Reference Time (s)	3.1	14.9	0.0	2.4	19.1	0.0	2.1	22.5	0.0	3.2	16.2	0.0
Adj Reference Time (s)	11.0	19.9	0.0	12.0	24.1	0.0	12.0	27.6	0.0	13.0	21.3	0.0
Permitted Option												
Adj Saturation A (vph)	101	1509		101	1496		101	1571		101	1566	
Reference Time A (s)	46.2	14.9		36.7	19.1		32.0	22.5		48.6	16.2	
Adj Saturation B (vph	NA	NA		NA	NA		NA	NA		NA	NA	
Reference Time B (s)	NA	NA		NA	NA		NA	NA		NA	NA	
Reference Time (s)		46.2			36.7			32.0			48.6	
Adj Reference Time (s)		51.2			41.7			37.1			53.7	
Split Option												
Ref Time Combined (s)	3.1	14.9		2.4	19.1		2.1	22.5		3.2	16.2	
Ref Time Seperate (s)	3.1	13.9		2.4	16.8		2.1	19.7		3.2	13.9	
Reference Time (s)	14.9	14.9		19.1	19.1		22.5	22.5		16.2	16.2	
Adj Reference Time (s)	19.9	19.9		24.1	24.1		27.6	27.6		21.3	21.3	

Summary	EB WB	NB SB	Combined
Protected Option (s)	35.1	40.6	
Permitted Option (s)	51.2	53.7	
Split Option (s)	44.0	48.8	
Minimum (s)	35.1	40.6	75.7

Right Turns
Adj Reference Time (s)
Cross Thru Ref Time (s)
Oncoming Left Ref Time (s)
Combined (s)

Intersection Summary			
Intersection Capacity Utilization	63.1%	ICU Level of Service	B

Reference Times and Phasing Options do not represent an optimized timing plan.

This document was created by an application that isn't licensed to use novaPDF.
Purchase a license to generate PDF files without this notice.

Movement	EBL	EBT	EBR	WBL	WBT	WBR	NBL	NBT	NBR	SBL	SBT	SBR
Lane Configurations												
Volume (vph)	19	27	12	10	25	15	19	294	10	5	231	9
Pedestrians												
Ped Button												
Pedestrian Timing (s)												
Free Right			No			No			No			No
Ideal Flow	1600	1600	1600	1600	1600	1600	1600	1600	1600	1600	1600	1600
Lost Time (s)	4.6	4.6	4.0	4.6	4.6	4.0	4.0	5.0	4.0	4.0	5.0	4.0
Minimum Green (s)	7.0	7.0	4.0	7.0	7.0	4.0	8.0	10.0	4.0	9.0	10.0	4.0
Refr Cycle Length (s)	120	120	120	120	120	120	120	120	120	120	120	120
Volume Combined (vph)	0	58	0	0	50	0	19	304	0	5	240	0
Lane Utilization Factor	1.00	1.00	1.00	1.00	1.00	1.00	1.00	1.00	1.00	1.00	1.00	1.00
Turning Factor (vph)	0.95	0.95	0.85	0.95	0.95	0.85	0.95	1.00	0.85	0.95	0.99	0.85
Saturated Flow (vph)	0	1525	0	0	1513	0	1520	1592	0	1520	1591	0
Ped Intf Time (s)	0.0	0.0	0.0	0.0	0.0	0.0	0.0	0.0	0.0	0.0	0.0	0.0
Pedestrian Frequency (%)		0.00			0.00			0.00			0.00	
Protected Option Allowed		No			No			Yes			Yes	
Reference Time (s)			0.0			0.0	1.5	22.9	0.0	0.4	18.1	0.0
Adj Reference Time (s)			0.0			0.0	12.0	27.9	0.0	13.0	23.1	0.0
Permitted Option												
Adj Saturation A (vph)	0	923		0	1312		101	1592		101	1591	
Reference Time A (s)	0.0	7.5		0.0	4.6		22.5	22.9		5.9	18.1	
Adj Saturation B (vph	0	0		0	0		NA	NA		NA	NA	
Reference Time B (s)	9.5	12.6		8.8	12.0		NA	NA		NA	NA	
Reference Time (s)		7.5			4.6			22.9			18.1	
Adj Reference Time (s)		12.1			11.6			27.9			23.1	
Split Option												
Ref Time Combined (s)	0.0	4.6		0.0	4.0		1.5	22.9		0.4	18.1	
Ref Time Seperate (s)	1.5	2.1		0.8	2.0		1.5	22.2		0.4	17.4	
Reference Time (s)	4.6	4.6		4.0	4.0		22.9	22.9		18.1	18.1	
Adj Reference Time (s)	11.6	11.6		11.6	11.6		27.9	27.9		23.1	23.1	

Summary	EB WB	NB SB	Combined
Protected Option (s)	NA	40.9	
Permitted Option (s)	12.1	27.9	
Split Option (s)	23.2	51.0	
Minimum (s)	12.1	27.9	40.0

Right Turns
Adj Reference Time (s)
Cross Thru Ref Time (s)
Oncoming Left Ref Time (s)
Combined (s)

Intersection Summary			
Intersection Capacity Utilization	33.4%	ICU Level of Service	A

Reference Times and Phasing Options do not represent an optimized timing plan.

This document was created by an application that isn't licensed to use novaPDF.
Purchase a license to generate PDF files without this notice.

Movement	EBL	EBT	EBR	WBL	WBT	WBR	NBL	NBT	NBR	SBL	SBT	SBR
Lane Configurations												
Volume (vph)	7	52	9	45	163	12	21	284	21	15	254	26
Pedestrians												
Ped Button												
Pedestrian Timing (s)												
Free Right			No			No			No			No
Ideal Flow	1900	1900	1900	1900	1900	1900	1900	1900	1900	1900	1900	1900
Lost Time (s)	5.0	5.0	4.0	5.0	5.0	4.0	4.0	5.0	4.0	4.0	5.0	4.0
Minimum Green (s)	7.0	7.0	4.0	7.0	7.0	4.0	8.0	10.0	4.0	9.0	10.0	4.0
Refr Cycle Length (s)	120	120	120	120	120	120	120	120	120	120	120	120
Volume Combined (vph)	7	61	0	45	175	0	21	305	0	15	280	0
Lane Utilization Factor	1.00	0.95	1.00	1.00	0.95	1.00	1.00	1.00	1.00	1.00	1.00	1.00
Turning Factor (vph)	0.95	0.98	0.85	0.95	0.99	0.85	0.95	0.99	0.85	0.95	0.99	0.85
Saturated Flow (vph)	1805	3538	0	1805	3580	0	1805	1880	0	1805	1874	0
Ped Intf Time (s)	0.0	0.0	0.0	0.0	0.0	0.0	0.0	0.0	0.0	0.0	0.0	0.0
Pedestrian Frequency (%)		0.00			0.00			0.00			0.00	
Protected Option Allowed		Yes			Yes			Yes			Yes	
Reference Time (s)	0.5	2.1	0.0	3.0	5.9	0.0	1.4	19.5	0.0	1.0	17.9	0.0
Adj Reference Time (s)	12.0	12.0	0.0	12.0	12.0	0.0	12.0	24.5	0.0	13.0	22.9	0.0
Permitted Option												
Adj Saturation A (vph)	120	1769		120	1790		120	1880		120	1874	
Reference Time A (s)	7.0	2.1		44.9	5.9		20.9	19.5		15.0	17.9	
Adj Saturation B (vph	NA	NA		0	3580		NA	NA		NA	NA	
Reference Time B (s)	NA	NA		11.0	5.9		NA	NA		NA	NA	
Reference Time (s)		7.0			11.0			20.9			17.9	
Adj Reference Time (s)		12.0			16.0			25.9			22.9	
Split Option												
Ref Time Combined (s)	0.5	2.1		3.0	5.9		1.4	19.5		1.0	17.9	
Ref Time Seperate (s)	0.5	1.8		3.0	5.5		1.4	18.1		1.0	16.3	
Reference Time (s)	2.1	2.1		5.9	5.9		19.5	19.5		17.9	17.9	
Adj Reference Time (s)	12.0	12.0		12.0	12.0		24.5	24.5		22.9	22.9	

Summary	EB WB	NB SB	Combined
Protected Option (s)	24.0	37.5	
Permitted Option (s)	16.0	25.9	
Split Option (s)	24.0	47.4	
Minimum (s)	16.0	25.9	41.9

Right Turns
Adj Reference Time (s)
Cross Thru Ref Time (s)
Oncoming Left Ref Time (s)
Combined (s)

Intersection Summary			
Intersection Capacity Utilization	34.9%	ICU Level of Service	A

Reference Times and Phasing Options do not represent an optimized timing plan.

This document was created by an application that isn't licensed to use novaPDF.
Purchase a license to generate PDF files without this notice.

Movement	EBL	EBT	EBR	WBL	WBT	WBR	NBL	NBT	NBR	SBL	SBT	SBR
Lane Configurations												
Volume (vph)	23	746	39	32	939	33	74	275	49	43	173	57
Pedestrians												
Ped Button												
Pedestrian Timing (s)												
Free Right			No			No			No			No
Ideal Flow	1900	1900	1900	1900	1900	1900	1900	1900	1900	1900	1900	1900
Lost Time (s)	5.0	5.0	4.0	5.0	5.0	4.0	4.0	6.0	4.0	4.0	6.0	4.0
Minimum Green (s)	9.0	9.0	4.0	9.0	9.0	4.0	9.0	9.0	4.0	9.0	9.0	4.0
Refr Cycle Length (s)	120	120	120	120	120	120	120	120	120	120	120	120
Volume Combined (vph)	23	785	0	32	972	0	74	324	0	43	230	0
Lane Utilization Factor	1.00	0.95	1.00	1.00	0.95	1.00	1.00	1.00	1.00	1.00	1.00	1.00
Turning Factor (vph)	0.95	0.99	0.85	0.95	0.99	0.85	0.95	0.98	0.85	0.95	0.96	0.85
Saturated Flow (vph)	1805	3591	0	1805	3599	0	1805	1857	0	1805	1829	0
Ped Intf Time (s)	0.0	0.0	0.0	0.0	0.0	0.0	0.0	0.0	0.0	0.0	0.0	0.0
Pedestrian Frequency (%)		0.00			0.00			0.00			0.00	
Protected Option Allowed		Yes			Yes			Yes			Yes	
Reference Time (s)	1.5	26.2	0.0	2.1	32.4	0.0	4.9	20.9	0.0	2.9	15.1	0.0
Adj Reference Time (s)	14.0	31.2	0.0	14.0	37.4	0.0	13.0	26.9	0.0	13.0	21.1	0.0
Permitted Option												
Adj Saturation A (vph)	120	1795		120	1800		120	1857		120	1829	
Reference Time A (s)	22.9	26.2		31.9	32.4		73.8	20.9		42.9	15.1	
Adj Saturation B (vph	NA	NA		NA	NA		NA	NA		NA	NA	
Reference Time B (s)	NA	NA		NA	NA		NA	NA		NA	NA	
Reference Time (s)		26.2			32.4			73.8			42.9	
Adj Reference Time (s)		31.2			37.4			79.8			48.9	
Split Option												
Ref Time Combined (s)	1.5	26.2		2.1	32.4		4.9	20.9		2.9	15.1	
Ref Time Seperate (s)	1.5	24.9		2.1	31.3		4.9	17.8		2.9	11.3	
Reference Time (s)	26.2	26.2		32.4	32.4		20.9	20.9		15.1	15.1	
Adj Reference Time (s)	31.2	31.2		37.4	37.4		26.9	26.9		21.1	21.1	

Summary	EB WB	NB SB	Combined
Protected Option (s)	51.4	39.9	
Permitted Option (s)	37.4	79.8	
Split Option (s)	68.6	48.0	
Minimum (s)	37.4	39.9	77.3

Right Turns
Adj Reference Time (s)
Cross Thru Ref Time (s)
Oncoming Left Ref Time (s)
Combined (s)

Intersection Summary			
Intersection Capacity Utilization	64.5%	ICU Level of Service	C

Reference Times and Phasing Options do not represent an optimized timing plan.

This document was created by an application that isn't licensed to use novaPDF.
Purchase a license to generate PDF files without this notice.

Movement	EBL	EBT	EBR	WBL	WBT	WBR	NBL	NBT	NBR	SBL	SBT	SBR
Lane Configurations												
Volume (vph)	13	387	30	9	466	20	36	67	15	10	27	22
Pedestrians												
Ped Button												
Pedestrian Timing (s)												
Free Right			No			No			No			No
Ideal Flow	1900	1900	1900	1900	1900	1900	1900	1900	1900	1900	1900	1900
Lost Time (s)	5.0	5.0	4.0	5.0	5.0	4.0	5.0	5.0	4.0	5.0	5.0	4.0
Minimum Green (s)	21.0	21.0	4.0	21.0	21.0	4.0	17.0	17.0	4.0	17.0	17.0	4.0
Refr Cycle Length (s)	120	120	120	120	120	120	120	120	120	120	120	120
Volume Combined (vph)	0	430	0	0	495	0	0	118	0	0	59	0
Lane Utilization Factor	1.00	0.95	1.00	1.00	0.95	1.00	1.00	0.95	1.00	1.00	0.95	1.00
Turning Factor (vph)	0.95	0.99	0.85	0.95	0.99	0.85	0.95	0.97	0.85	0.95	0.94	0.85
Saturated Flow (vph)	0	3574	0	0	3592	0	0	3494	0	0	3386	0
Ped Intf Time (s)	0.0	0.0	0.0	0.0	0.0	0.0	0.0	0.0	0.0	0.0	0.0	0.0
Pedestrian Frequency (%)		0.00			0.00			0.00			0.00	
Protected Option Allowed		No			No			No			No	
Reference Time (s)			0.0			0.0			0.0			0.0
Adj Reference Time (s)			0.0			0.0			0.0			0.0
Permitted Option												
Adj Saturation A (vph)	0	894		0	1150		0	116		0	113	
Reference Time A (s)	0.0	25.4		0.0	23.9		0.0	37.1		0.0	10.6	
Adj Saturation B (vph	NA	NA		NA	NA		0	1759		0	1687	
Reference Time B (s)	NA	NA		NA	NA		10.4	8.0		8.7	6.1	
Reference Time (s)		25.4			23.9			10.4			8.7	
Adj Reference Time (s)		30.4			28.9			22.0			22.0	
Split Option												
Ref Time Combined (s)	0.0	14.4		0.0	16.5		0.0	4.1		0.0	2.1	
Ref Time Seperate (s)	0.9	13.0		0.6	15.6		2.4	2.3		0.7	1.0	
Reference Time (s)	14.4	14.4		16.5	16.5		4.1	4.1		2.1	2.1	
Adj Reference Time (s)	26.0	26.0		26.0	26.0		22.0	22.0		22.0	22.0	

Summary	EB WB	NB SB	Combined
Protected Option (s)	NA	NA	
Permitted Option (s)	30.4	22.0	
Split Option (s)	52.0	44.0	
Minimum (s)	30.4	22.0	52.4

Right Turns
Adj Reference Time (s)
Cross Thru Ref Time (s)
Oncoming Left Ref Time (s)
Combined (s)

Intersection Summary			
Intersection Capacity Utilization	43.7%	ICU Level of Service	A

Reference Times and Phasing Options do not represent an optimized timing plan.

This document was created by an application that isn't licensed to use novaPDF.
Purchase a license to generate PDF files without this notice.

Movement	EBL	EBT	EBR	WBL	WBT	WBR	NBL	NBT	NBR	SBL	SBT	SBR
Lane Configurations												
Volume (vph)	4	13	8	17	27	28	14	90	6	12	37	12
Pedestrians												
Ped Button												
Pedestrian Timing (s)												
Free Right			No			No			No			No
Ideal Flow	1900	1900	1900	1900	1900	1900	1900	1900	1900	1900	1900	1900
Lost Time (s)	4.0	4.0	4.0	4.0	4.0	4.0	4.0	4.0	4.0	4.0	4.0	4.0
Minimum Green (s)	4.0	4.0	4.0	4.0	4.0	4.0	4.0	4.0	4.0	4.0	4.0	4.0
Refr Cycle Length (s)	120	120	120	120	120	120	120	120	120	120	120	120
Volume Combined (vph)	0	25	0	0	72	0	0	104	6	0	49	12
Lane Utilization Factor	1.00	1.00	1.00	1.00	1.00	1.00	1.00	1.00	1.00	1.00	1.00	1.00
Turning Factor (vph)	0.95	0.94	0.85	0.95	0.93	0.85	0.95	0.99	0.85	0.95	0.99	0.85
Saturated Flow (vph)	0	1794	0	0	1768	0	0	1887	1615	0	1877	1615
Ped Intf Time (s)	0.0	0.0	0.0	0.0	0.0	0.0	0.0	0.0	0.0	0.0	0.0	0.0
Pedestrian Frequency (%)		0.00			0.00			0.00			0.00	
Protected Option Allowed		No			No			No			No	
Reference Time (s)			0.0			0.0			0.4			0.9
Adj Reference Time (s)			0.0			0.0			8.0			8.0
Permitted Option												
Adj Saturation A (vph)	0	1494		0	1139		0	627		0	395	
Reference Time A (s)	0.0	2.0		0.0	7.6		0.0	19.9		0.0	14.9	
Adj Saturation B (vph	0	0		0	0		0	0		0	0	
Reference Time B (s)	8.3	9.7		9.1	12.9		8.9	14.6		8.8	11.1	
Reference Time (s)		2.0			7.6			14.6			11.1	
Adj Reference Time (s)		8.0			11.6			18.6			15.1	
Split Option												
Ref Time Combined (s)	0.0	1.7		0.0	4.9		0.0	6.6		0.0	3.1	
Ref Time Seperate (s)	0.3	0.9		1.1	1.8		0.9	5.7		0.8	2.3	
Reference Time (s)	1.7	1.7		4.9	4.9		6.6	6.6		3.1	3.1	
Adj Reference Time (s)	8.0	8.0		8.9	8.9		10.6	10.6		8.0	8.0	

Summary	EB WB	NB SB	Combined
Protected Option (s)	NA	NA	
Permitted Option (s)	11.6	18.6	
Split Option (s)	16.9	18.6	
Minimum (s)	11.6	18.6	30.2

Right Turns	NBR	SBR
Adj Reference Time (s)	8.0	8.0
Cross Thru Ref Time (s)	8.0	8.9
Oncoming Left Ref Time (s)	8.0	10.6
Combined (s)	24.0	27.5

Intersection Summary			
Intersection Capacity Utilization	25.2%	ICU Level of Service	A

Reference Times and Phasing Options do not represent an optimized timing plan.

This document was created by an application that isn't licensed to use novaPDF.
Purchase a license to generate PDF files without this notice.

Movement	EBL	EBT	EBR	WBL	WBT	WBR	NBL	NBT	NBR	SBL	SBT	SBR
Lane Configurations												
Volume (vph)	14	49	14	13	181	15	32	63	15	6	58	32
Pedestrians												
Ped Button												
Pedestrian Timing (s)												
Free Right			No			No			No			No
Ideal Flow	1900	1900	1900	1900	1900	1900	1900	1900	1900	1900	1900	1900
Lost Time (s)	4.5	4.5	4.5	4.5	4.5	4.5	4.5	4.5	4.0	4.5	4.5	4.0
Minimum Green (s)	22.0	22.0	22.0	22.0	22.0	22.0	19.0	19.0	4.0	19.0	19.0	4.0
Refr Cycle Length (s)	120	120	120	120	120	120	120	120	120	120	120	120
Volume Combined (vph)	14	49	14	13	181	15	0	110	0	0	96	0
Lane Utilization Factor	1.00	1.00	1.00	1.00	1.00	1.00	1.00	0.95	1.00	1.00	0.95	1.00
Turning Factor (vph)	0.95	1.00	0.85	0.95	1.00	0.85	0.95	0.97	0.85	0.95	0.95	0.85
Saturated Flow (vph)	1805	1900	1615	1805	1900	1615	0	3492	0	0	3426	0
Ped Intf Time (s)	0.0	0.0	0.0	0.0	0.0	0.0	0.0	0.0	0.0	0.0	0.0	0.0
Pedestrian Frequency (%)		0.00			0.00			0.00			0.00	
Protected Option Allowed		Yes			Yes			No			No	
Reference Time (s)	0.9	3.1	1.0	0.9	11.4	1.1			0.0			0.0
Adj Reference Time (s)	26.5	26.5	26.5	26.5	26.5	26.5			0.0			0.0
Permitted Option												
Adj Saturation A (vph)	120	1900		120	1900		0	116		0	488	
Reference Time A (s)	14.0	3.1		13.0	11.4		0.0	33.0		0.0	8.9	
Adj Saturation B (vph	NA	NA		0	1900		0	1757		0	1712	
Reference Time B (s)	NA	NA		8.9	11.4		10.1	7.8		8.4	7.4	
Reference Time (s)		14.0			11.4			10.1			8.4	
Adj Reference Time (s)		26.5			26.5			23.5			23.5	
Split Option												
Ref Time Combined (s)	0.9	3.1		0.9	11.4		0.0	3.8		0.0	3.4	
Ref Time Seperate (s)	0.9	3.1		0.9	11.4		2.1	2.2		0.4	2.0	
Reference Time (s)	3.1	3.1		11.4	11.4		3.8	3.8		3.4	3.4	
Adj Reference Time (s)	26.5	26.5		26.5	26.5		23.5	23.5		23.5	23.5	

Summary	EB WB	NB SB	Combined
Protected Option (s)	53.0	NA	
Permitted Option (s)	26.5	23.5	
Split Option (s)	53.0	47.0	
Minimum (s)	26.5	23.5	50.0

Right Turns	EBR	WBR
Adj Reference Time (s)	26.5	26.5
Cross Thru Ref Time (s)	23.5	23.5
Oncoming Left Ref Time (s)	26.5	26.5
Combined (s)	76.5	76.5

Intersection Summary			
Intersection Capacity Utilization	63.7%	ICU Level of Service	B

Reference Times and Phasing Options do not represent an optimized timing plan.

This document was created by an application that isn't licensed to use novaPDF.
Purchase a license to generate PDF files without this notice.

Movement	EBL	EBT	EBR	WBL	WBT	WBR	NBL	NBT	NBR	SBL	SBT	SBR
Lane Configurations												
Volume (vph)	63	737	37	10	1023	17	25	32	14	20	38	79
Pedestrians												
Ped Button												
Pedestrian Timing (s)												
Free Right			No			No			No			No
Ideal Flow	1900	1900	1900	1900	1900	1900	1900	1900	1900	1900	1900	1900
Lost Time (s)	5.0	5.0	4.0	5.0	5.0	4.0	5.0	5.0	4.0	5.0	5.0	4.0
Minimum Green (s)	24.0	24.0	4.0	24.0	24.0	4.0	7.0	7.0	4.0	7.0	7.0	4.0
Refr Cycle Length (s)	120	120	120	120	120	120	120	120	120	120	120	120
Volume Combined (vph)	63	774	0	10	1040	0	0	71	0	0	137	0
Lane Utilization Factor	1.00	0.95	1.00	1.00	0.95	1.00	1.00	0.95	1.00	1.00	0.95	1.00
Turning Factor (vph)	0.95	0.99	0.85	0.95	1.00	0.85	0.95	0.95	0.85	0.95	0.91	0.85
Saturated Flow (vph)	1805	3592	0	1805	3609	0	0	3449	0	0	3281	0
Ped Intf Time (s)	0.0	0.0	0.0	0.0	0.0	0.0	0.0	0.0	0.0	0.0	0.0	0.0
Pedestrian Frequency (%)		0.00			0.00			0.00			0.00	
Protected Option Allowed		Yes			Yes			No			No	
Reference Time (s)	4.2	25.9	0.0	0.7	34.6	0.0			0.0			0.0
Adj Reference Time (s)	29.0	30.9	0.0	29.0	39.6	0.0			0.0			0.0
Permitted Option												
Adj Saturation A (vph)	120	1796		120	1804		0	115		0	141	
Reference Time A (s)	62.8	25.9		10.0	34.6		0.0	26.1		0.0	24.2	
Adj Saturation B (vph	NA	NA		NA	NA		0	1726		0	1626	
Reference Time B (s)	NA	NA		NA	NA		9.7	6.5		9.3	9.0	
Reference Time (s)		62.8			34.6			9.7			9.3	
Adj Reference Time (s)		67.8			39.6			14.7			14.3	
Split Option												
Ref Time Combined (s)	4.2	25.9		0.7	34.6		0.0	2.5		0.0	5.0	
Ref Time Seperate (s)	4.2	24.6		0.7	34.0		1.7	1.1		1.3	1.4	
Reference Time (s)	25.9	25.9		34.6	34.6		2.5	2.5		5.0	5.0	
Adj Reference Time (s)	30.9	30.9		39.6	39.6		12.0	12.0		12.0	12.0	

Summary	EB WB	NB SB	Combined
Protected Option (s)	68.6	NA	
Permitted Option (s)	67.8	14.7	
Split Option (s)	70.4	24.0	
Minimum (s)	67.8	14.7	82.5

Right Turns
Adj Reference Time (s)
Cross Thru Ref Time (s)
Oncoming Left Ref Time (s)
Combined (s)

Intersection Summary			
Intersection Capacity Utilization	68.7%	ICU Level of Service	C

Reference Times and Phasing Options do not represent an optimized timing plan.

This document was created by an application that isn't licensed to use novaPDF.
Purchase a license to generate PDF files without this notice.

Intersection Capacity Utilization
1: E Street & 9th Street

01-24-2024

Movement	EBL	EBT	EBR	WBL	WBT	WBR	NBL	NBT	NBR	SBL	SBT	SBR
Lane Configurations												
Volume (vph)	16	455	34	51	416	71	10	124	15	56	209	26
Pedestrians												
Ped Button												
Pedestrian Timing (s)												
Free Right			No			No			No			No
Ideal Flow	1600	1600	1600	1600	1600	1600	1600	1600	1600	1600	1600	1600
Lost Time (s)	4.0	5.0	4.0	4.0	5.0	4.0	4.0	5.1	4.0	4.0	5.1	4.0
Minimum Green (s)	7.0	6.0	4.0	8.0	6.0	4.0	8.0	10.0	4.0	9.0	10.0	4.0
Refr Cycle Length (s)	120	120	120	120	120	120	120	120	120	120	120	120
Volume Combined (vph)	16	489	0	51	487	0	10	139	0	56	235	0
Lane Utilization Factor	1.00	0.95	1.00	1.00	0.95	1.00	1.00	1.00	1.00	1.00	1.00	1.00
Turning Factor (vph)	0.95	0.99	0.85	0.95	0.98	0.85	0.95	0.98	0.85	0.95	0.98	0.85
Saturated Flow (vph)	1520	3015	0	1520	2980	0	1520	1574	0	1520	1573	0
Ped Intf Time (s)	0.0	0.0	0.0	0.0	0.0	0.0	0.0	0.0	0.0	0.0	0.0	0.0
Pedestrian Frequency (%)		0.00			0.00			0.00			0.00	
Protected Option Allowed		Yes			Yes			Yes			Yes	
Reference Time (s)	1.3	19.5	0.0	4.0	19.6	0.0	0.8	10.6	0.0	4.4	17.9	0.0
Adj Reference Time (s)	11.0	24.5	0.0	12.0	24.6	0.0	12.0	15.7	0.0	13.0	23.0	0.0
Permitted Option												
Adj Saturation A (vph)	101	1507		101	1490		101	1574		101	1573	
Reference Time A (s)	18.9	19.5		60.4	19.6		11.8	10.6		66.3	17.9	
Adj Saturation B (vph	NA	NA		NA	NA		NA	NA		NA	NA	
Reference Time B (s)	NA	NA		NA	NA		NA	NA		NA	NA	
Reference Time (s)		19.5			60.4			11.8			66.3	
Adj Reference Time (s)		24.5			65.4			16.9			71.4	
Split Option												
Ref Time Combined (s)	1.3	19.5		4.0	19.6		0.8	10.6		4.4	17.9	
Ref Time Seperate (s)	1.3	18.1		4.0	16.8		0.8	9.5		4.4	15.9	
Reference Time (s)	19.5	19.5		19.6	19.6		10.6	10.6		17.9	17.9	
Adj Reference Time (s)	24.5	24.5		24.6	24.6		15.7	15.7		23.0	23.0	

Summary	EB WB	NB SB	Combined
Protected Option (s)	36.5	35.0	
Permitted Option (s)	65.4	71.4	
Split Option (s)	49.1	38.7	
Minimum (s)	36.5	35.0	71.5

Right Turns
Adj Reference Time (s)
Cross Thru Ref Time (s)
Oncoming Left Ref Time (s)
Combined (s)

Intersection Summary			
Intersection Capacity Utilization	59.6%	ICU Level of Service	B

Reference Times and Phasing Options do not represent an optimized timing plan.

This document was created by an application that isn't licensed to use novaPDF.
Purchase a license to generate PDF files without this notice.

Movement	EBL	EBT	EBR	WBL	WBT	WBR	NBL	NBT	NBR	SBL	SBT	SBR
Lane Configurations												
Volume (vph)	4	21	7	4	30	7	4	165	20	6	252	17
Pedestrians												
Ped Button												
Pedestrian Timing (s)												
Free Right			No			No			No			No
Ideal Flow	1600	1600	1600	1600	1600	1600	1600	1600	1600	1600	1600	1600
Lost Time (s)	4.6	4.6	4.0	4.6	4.6	4.0	4.0	5.0	4.0	4.0	5.0	4.0
Minimum Green (s)	7.0	7.0	4.0	7.0	7.0	4.0	8.0	10.0	4.0	9.0	10.0	4.0
Refr Cycle Length (s)	120	120	120	120	120	120	120	120	120	120	120	120
Volume Combined (vph)	0	32	0	0	41	0	4	185	0	6	269	0
Lane Utilization Factor	1.00	1.00	1.00	1.00	1.00	1.00	1.00	1.00	1.00	1.00	1.00	1.00
Turning Factor (vph)	0.95	0.96	0.85	0.95	0.97	0.85	0.95	0.98	0.85	0.95	0.99	0.85
Saturated Flow (vph)	0	1538	0	0	1551	0	1520	1574	0	1520	1585	0
Ped Intf Time (s)	0.0	0.0	0.0	0.0	0.0	0.0	0.0	0.0	0.0	0.0	0.0	0.0
Pedestrian Frequency (%)		0.00			0.00			0.00			0.00	
Protected Option Allowed		No			No			Yes			Yes	
Reference Time (s)			0.0			0.0	0.3	14.1	0.0	0.5	20.4	0.0
Adj Reference Time (s)			0.0			0.0	12.0	19.1	0.0	13.0	25.4	0.0
Permitted Option												
Adj Saturation A (vph)	0	1078		0	1241		101	1574		101	1585	
Reference Time A (s)	0.0	3.6		0.0	4.0		4.7	14.1		7.1	20.4	
Adj Saturation B (vph	0	0		0	0		NA	NA		NA	NA	
Reference Time B (s)	8.3	10.5		8.3	11.2		NA	NA		NA	NA	
Reference Time (s)		3.6			4.0			14.1			20.4	
Adj Reference Time (s)		11.6			11.6			19.1			25.4	
Split Option												
Ref Time Combined (s)	0.0	2.5		0.0	3.2		0.3	14.1		0.5	20.4	
Ref Time Seperate (s)	0.3	1.6		0.3	2.3		0.3	12.6		0.5	19.1	
Reference Time (s)	2.5	2.5		3.2	3.2		14.1	14.1		20.4	20.4	
Adj Reference Time (s)	11.6	11.6		11.6	11.6		19.1	19.1		25.4	25.4	

Summary	EB WB	NB SB	Combined
Protected Option (s)	NA	37.4	
Permitted Option (s)	11.6	25.4	
Split Option (s)	23.2	44.5	
Minimum (s)	11.6	25.4	37.0

Right Turns
Adj Reference Time (s)
Cross Thru Ref Time (s)
Oncoming Left Ref Time (s)
Combined (s)

Intersection Summary			
Intersection Capacity Utilization	30.8%	ICU Level of Service	A

Reference Times and Phasing Options do not represent an optimized timing plan.

This document was created by an application that isn't licensed to use novaPDF.
Purchase a license to generate PDF files without this notice.

Movement	EBL	EBT	EBR	WBL	WBT	WBR	NBL	NBT	NBR	SBL	SBT	SBR
Lane Configurations												
Volume (vph)	20	127	35	16	58	11	20	169	60	17	239	15
Pedestrians												
Ped Button												
Pedestrian Timing (s)												
Free Right			No			No			No			No
Ideal Flow	1900	1900	1900	1900	1900	1900	1900	1900	1900	1900	1900	1900
Lost Time (s)	5.0	5.0	4.0	5.0	5.0	4.0	4.0	5.0	4.0	4.0	5.0	4.0
Minimum Green (s)	7.0	7.0	4.0	7.0	7.0	4.0	8.0	10.0	4.0	9.0	10.0	4.0
Refr Cycle Length (s)	120	120	120	120	120	120	120	120	120	120	120	120
Volume Combined (vph)	20	162	0	16	69	0	20	229	0	17	254	0
Lane Utilization Factor	1.00	0.95	1.00	1.00	0.95	1.00	1.00	1.00	1.00	1.00	1.00	1.00
Turning Factor (vph)	0.95	0.97	0.85	0.95	0.98	0.85	0.95	0.96	0.85	0.95	0.99	0.85
Saturated Flow (vph)	1805	3500	0	1805	3531	0	1805	1825	0	1805	1883	0
Ped Intf Time (s)	0.0	0.0	0.0	0.0	0.0	0.0	0.0	0.0	0.0	0.0	0.0	0.0
Pedestrian Frequency (%)		0.00			0.00			0.00			0.00	
Protected Option Allowed		Yes			Yes			Yes			Yes	
Reference Time (s)	1.3	5.6	0.0	1.1	2.3	0.0	1.3	15.1	0.0	1.1	16.2	0.0
Adj Reference Time (s)	12.0	12.0	0.0	12.0	12.0	0.0	12.0	20.1	0.0	13.0	21.2	0.0
Permitted Option												
Adj Saturation A (vph)	120	1750		120	1766		120	1825		120	1883	
Reference Time A (s)	19.9	5.6		16.0	2.3		19.9	15.1		17.0	16.2	
Adj Saturation B (vph	0	3500		NA	NA		NA	NA		NA	NA	
Reference Time B (s)	9.3	5.6		NA	NA		NA	NA		NA	NA	
Reference Time (s)		9.3			16.0			19.9			17.0	
Adj Reference Time (s)		14.3			21.0			24.9			22.0	
Split Option												
Ref Time Combined (s)	1.3	5.6		1.1	2.3		1.3	15.1		1.1	16.2	
Ref Time Seperate (s)	1.3	4.4		1.1	2.0		1.3	11.1		1.1	15.2	
Reference Time (s)	5.6	5.6		2.3	2.3		15.1	15.1		16.2	16.2	
Adj Reference Time (s)	12.0	12.0		12.0	12.0		20.1	20.1		21.2	21.2	

Summary	EB WB	NB SB	Combined
Protected Option (s)	24.0	33.2	
Permitted Option (s)	21.0	24.9	
Split Option (s)	24.0	41.2	
Minimum (s)	21.0	24.9	45.9

Right Turns
Adj Reference Time (s)
Cross Thru Ref Time (s)
Oncoming Left Ref Time (s)
Combined (s)

Intersection Summary			
Intersection Capacity Utilization	38.3%	ICU Level of Service	A

Reference Times and Phasing Options do not represent an optimized timing plan.

This document was created by an application that isn't licensed to use novaPDF.
Purchase a license to generate PDF files without this notice.

Movement	EBL	EBT	EBR	WBL	WBT	WBR	NBL	NBT	NBR	SBL	SBT	SBR
Lane Configurations												
Volume (vph)	118	1510	51	17	702	15	29	115	37	35	194	39
Pedestrians												
Ped Button												
Pedestrian Timing (s)												
Free Right			No			No			No			No
Ideal Flow	1900	1900	1900	1900	1900	1900	1900	1900	1900	1900	1900	1900
Lost Time (s)	5.0	5.0	4.0	5.0	5.0	4.0	4.0	6.0	4.0	4.0	6.0	4.0
Minimum Green (s)	9.0	9.0	4.0	9.0	9.0	4.0	9.0	9.0	4.0	9.0	9.0	4.0
Refr Cycle Length (s)	120	120	120	120	120	120	120	120	120	120	120	120
Volume Combined (vph)	118	1561	0	17	717	0	29	152	0	35	233	0
Lane Utilization Factor	1.00	0.95	1.00	1.00	0.95	1.00	1.00	1.00	1.00	1.00	1.00	1.00
Turning Factor (vph)	0.95	1.00	0.85	0.95	1.00	0.85	0.95	0.96	0.85	0.95	0.97	0.85
Saturated Flow (vph)	1805	3600	0	1805	3606	0	1805	1831	0	1805	1852	0
Ped Intf Time (s)	0.0	0.0	0.0	0.0	0.0	0.0	0.0	0.0	0.0	0.0	0.0	0.0
Pedestrian Frequency (%)		0.00			0.00			0.00			0.00	
Protected Option Allowed		Yes			Yes			Yes			Yes	
Reference Time (s)	7.8	52.0	0.0	1.1	23.9	0.0	1.9	10.0	0.0	2.3	15.1	0.0
Adj Reference Time (s)	14.0	57.0	0.0	14.0	28.9	0.0	13.0	16.0	0.0	13.0	21.1	0.0
Permitted Option												
Adj Saturation A (vph)	120	1800		120	1803		120	1831		120	1852	
Reference Time A (s)	117.7	52.0		17.0	23.9		28.9	10.0		34.9	15.1	
Adj Saturation B (vph	NA	NA		NA	NA		NA	NA		NA	NA	
Reference Time B (s)	NA	NA		NA	NA		NA	NA		NA	NA	
Reference Time (s)		117.7			23.9			28.9			34.9	
Adj Reference Time (s)		122.7			28.9			34.9			40.9	
Split Option												
Ref Time Combined (s)	7.8	52.0		1.1	23.9		1.9	10.0		2.3	15.1	
Ref Time Seperate (s)	7.8	50.3		1.1	23.4		1.9	7.5		2.3	12.6	
Reference Time (s)	52.0	52.0		23.9	23.9		10.0	10.0		15.1	15.1	
Adj Reference Time (s)	57.0	57.0		28.9	28.9		16.0	16.0		21.1	21.1	

Summary	EB WB	NB SB	Combined
Protected Option (s)	71.0	34.1	
Permitted Option (s)	122.7	40.9	
Split Option (s)	85.9	37.1	
Minimum (s)	71.0	34.1	105.1

Right Turns
Adj Reference Time (s)
Cross Thru Ref Time (s)
Oncoming Left Ref Time (s)
Combined (s)

Intersection Summary			
Intersection Capacity Utilization	87.6%	ICU Level of Service	E

Reference Times and Phasing Options do not represent an optimized timing plan.

This document was created by an application that isn't licensed to use novaPDF.
Purchase a license to generate PDF files without this notice.

Movement	EBL	EBT	EBR	WBL	WBT	WBR	NBL	NBT	NBR	SBL	SBT	SBR
Lane Configurations												
Volume (vph)	11	478	87	31	389	22	12	35	15	15	88	17
Pedestrians												
Ped Button												
Pedestrian Timing (s)												
Free Right			No			No			No			No
Ideal Flow	1900	1900	1900	1900	1900	1900	1900	1900	1900	1900	1900	1900
Lost Time (s)	5.0	5.0	4.0	5.0	5.0	4.0	5.0	5.0	4.0	5.0	5.0	4.0
Minimum Green (s)	21.0	21.0	4.0	21.0	21.0	4.0	17.0	17.0	4.0	17.0	17.0	4.0
Refr Cycle Length (s)	120	120	120	120	120	120	120	120	120	120	120	120
Volume Combined (vph)	0	576	0	0	442	0	0	62	0	0	120	0
Lane Utilization Factor	1.00	0.95	1.00	1.00	0.95	1.00	1.00	0.95	1.00	1.00	0.95	1.00
Turning Factor (vph)	0.95	0.98	0.85	0.95	0.99	0.85	0.95	0.95	0.85	0.95	0.97	0.85
Saturated Flow (vph)	0	3532	0	0	3578	0	0	3453	0	0	3519	0
Ped Intf Time (s)	0.0	0.0	0.0	0.0	0.0	0.0	0.0	0.0	0.0	0.0	0.0	0.0
Pedestrian Frequency (%)		0.00			0.00			0.00			0.00	
Protected Option Allowed		No			No			No			No	
Reference Time (s)			0.0			0.0			0.0			0.0
Adj Reference Time (s)			0.0			0.0			0.0			0.0
Permitted Option												
Adj Saturation A (vph)	0	1109		0	452		0	115		0	201	
Reference Time A (s)	0.0	28.8		0.0	42.2		0.0	12.5		0.0	17.9	
Adj Saturation B (vph	NA	NA		NA	NA		0	1727		0	1765	
Reference Time B (s)	NA	NA		NA	NA		8.8	6.2		9.0	8.1	
Reference Time (s)		28.8			42.2			8.8			9.0	
Adj Reference Time (s)		33.8			47.2			22.0			22.0	
Split Option												
Ref Time Combined (s)	0.0	19.6		0.0	14.8		0.0	2.2		0.0	4.1	
Ref Time Seperate (s)	0.7	16.2		2.1	13.0		0.8	1.2		1.0	3.0	
Reference Time (s)	19.6	19.6		14.8	14.8		2.2	2.2		4.1	4.1	
Adj Reference Time (s)	26.0	26.0		26.0	26.0		22.0	22.0		22.0	22.0	

Summary	EB WB	NB SB	Combined
Protected Option (s)	NA	NA	
Permitted Option (s)	47.2	22.0	
Split Option (s)	52.0	44.0	
Minimum (s)	47.2	22.0	69.2

Right Turns
Adj Reference Time (s)
Cross Thru Ref Time (s)
Oncoming Left Ref Time (s)
Combined (s)

Intersection Summary			
Intersection Capacity Utilization	57.7%	ICU Level of Service	B

Reference Times and Phasing Options do not represent an optimized timing plan.

This document was created by an application that isn't licensed to use novaPDF.
Purchase a license to generate PDF files without this notice.

Movement	EBL	EBT	EBR	WBL	WBT	WBR	NBL	NBT	NBR	SBL	SBT	SBR
Lane Configurations												
Volume (vph)	6	13	33	26	13	8	15	74	13	7	185	4
Pedestrians												
Ped Button												
Pedestrian Timing (s)												
Free Right			No			No			No			No
Ideal Flow	1900	1900	1900	1900	1900	1900	1900	1900	1900	1900	1900	1900
Lost Time (s)	4.0	4.0	4.0	4.0	4.0	4.0	4.0	4.0	4.0	4.0	4.0	4.0
Minimum Green (s)	4.0	4.0	4.0	4.0	4.0	4.0	4.0	4.0	4.0	4.0	4.0	4.0
Refr Cycle Length (s)	120	120	120	120	120	120	120	120	120	120	120	120
Volume Combined (vph)	0	52	0	0	47	0	0	89	13	0	192	4
Lane Utilization Factor	1.00	1.00	1.00	1.00	1.00	1.00	1.00	1.00	1.00	1.00	1.00	1.00
Turning Factor (vph)	0.95	0.90	0.85	0.95	0.95	0.85	0.95	0.99	0.85	0.95	1.00	0.85
Saturated Flow (vph)	0	1709	0	0	1800	0	0	1884	1615	0	1897	1615
Ped Intf Time (s)	0.0	0.0	0.0	0.0	0.0	0.0	0.0	0.0	0.0	0.0	0.0	0.0
Pedestrian Frequency (%)		0.00			0.00			0.00			0.00	
Protected Option Allowed		No			No			No			No	
Reference Time (s)			0.0			0.0			1.0			0.3
Adj Reference Time (s)			0.0			0.0			8.0			8.0
Permitted Option												
Adj Saturation A (vph)	0	1710		0	552		0	532		0	1246	
Reference Time A (s)	0.0	3.6		0.0	10.2		0.0	20.1		0.0	18.5	
Adj Saturation B (vph	0	0		0	0		NA	NA		0	0	
Reference Time B (s)	8.4	11.7		9.7	11.1		NA	NA		8.5	20.1	
Reference Time (s)		3.6			10.2			20.1			18.5	
Adj Reference Time (s)		8.0			14.2			24.1			22.5	
Split Option												
Ref Time Combined (s)	0.0	3.7		0.0	3.1		0.0	5.7		0.0	12.1	
Ref Time Seperate (s)	0.4	0.9		1.7	0.9		1.0	4.7		0.5	11.7	
Reference Time (s)	3.7	3.7		3.1	3.1		5.7	5.7		12.1	12.1	
Adj Reference Time (s)	8.0	8.0		8.0	8.0		9.7	9.7		16.1	16.1	

Summary	EB WB	NB SB	Combined
Protected Option (s)	NA	NA	
Permitted Option (s)	14.2	24.1	
Split Option (s)	16.0	25.8	
Minimum (s)	14.2	24.1	38.3

Right Turns	NBR	SBR
Adj Reference Time (s)	8.0	8.0
Cross Thru Ref Time (s)	8.0	8.0
Oncoming Left Ref Time (s)	16.1	9.7
Combined (s)	32.1	25.7

Intersection Summary			
Intersection Capacity Utilization	31.9%	ICU Level of Service	A

Reference Times and Phasing Options do not represent an optimized timing plan.

This document was created by an application that isn't licensed to use novaPDF.
Purchase a license to generate PDF files without this notice.

Movement	EBL	EBT	EBR	WBL	WBT	WBR	NBL	NBT	NBR	SBL	SBT	SBR
Lane Configurations												
Volume (vph)	30	113	26	16	61	17	21	74	53	21	61	73
Pedestrians												
Ped Button												
Pedestrian Timing (s)												
Free Right			No			No			No			No
Ideal Flow	1900	1900	1900	1900	1900	1900	1900	1900	1900	1900	1900	1900
Lost Time (s)	4.5	4.5	4.5	4.5	4.5	4.5	4.5	4.5	4.0	4.5	4.5	4.0
Minimum Green (s)	22.0	22.0	22.0	22.0	22.0	22.0	19.0	19.0	4.0	19.0	19.0	4.0
Refr Cycle Length (s)	120	120	120	120	120	120	120	120	120	120	120	120
Volume Combined (vph)	30	113	26	16	61	17	0	148	0	0	155	0
Lane Utilization Factor	1.00	1.00	1.00	1.00	1.00	1.00	1.00	0.95	1.00	1.00	0.95	1.00
Turning Factor (vph)	0.95	1.00	0.85	0.95	1.00	0.85	0.95	0.94	0.85	0.95	0.92	0.85
Saturated Flow (vph)	1805	1900	1615	1805	1900	1615	0	3399	0	0	3339	0
Ped Intf Time (s)	0.0	0.0	0.0	0.0	0.0	0.0	0.0	0.0	0.0	0.0	0.0	0.0
Pedestrian Frequency (%)		0.00			0.00			0.00			0.00	
Protected Option Allowed		Yes			Yes			No			No	
Reference Time (s)	2.0	7.1	1.9	1.1	3.9	1.3			0.0			0.0
Adj Reference Time (s)	26.5	26.5	26.5	26.5	26.5	26.5			0.0			0.0
Permitted Option												
Adj Saturation A (vph)	120	1900		120	1900		0	155		0	165	
Reference Time A (s)	29.9	7.1		16.0	3.9		0.0	24.8		0.0	25.7	
Adj Saturation B (vph	0	1900		0	1900		NA	NA		NA	NA	
Reference Time B (s)	10.0	7.1		9.1	3.9		NA	NA		NA	NA	
Reference Time (s)		10.0			9.1			24.8			25.7	
Adj Reference Time (s)		26.5			26.5			29.3			30.2	
Split Option												
Ref Time Combined (s)	2.0	7.1		1.1	3.9		0.0	5.2		0.0	5.6	
Ref Time Seperate (s)	2.0	7.1		1.1	3.9		1.4	2.6		1.4	2.2	
Reference Time (s)	7.1	7.1		3.9	3.9		5.2	5.2		5.6	5.6	
Adj Reference Time (s)	26.5	26.5		26.5	26.5		23.5	23.5		23.5	23.5	

Summary	EB WB	NB SB	Combined
Protected Option (s)	53.0	NA	
Permitted Option (s)	26.5	30.2	
Split Option (s)	53.0	47.0	
Minimum (s)	26.5	30.2	56.7

Right Turns	EBR	WBR
Adj Reference Time (s)	26.5	26.5
Cross Thru Ref Time (s)	23.5	23.5
Oncoming Left Ref Time (s)	26.5	26.5
Combined (s)	76.5	76.5

Intersection Summary			
Intersection Capacity Utilization	63.7%	ICU Level of Service	B

Reference Times and Phasing Options do not represent an optimized timing plan.

This document was created by an application that isn't licensed to use novaPDF.
Purchase a license to generate PDF files without this notice.

Movement	EBL	EBT	EBR	WBL	WBT	WBR	NBL	NBT	NBR	SBL	SBT	SBR
Lane Configurations												
Volume (vph)	89	1690	10	10	738	29	7	25	8	17	29	16
Pedestrians												
Ped Button												
Pedestrian Timing (s)												
Free Right			No			No			No			No
Ideal Flow	1900	1900	1900	1900	1900	1900	1900	1900	1900	1900	1900	1900
Lost Time (s)	5.0	5.0	4.0	5.0	5.0	4.0	5.0	5.0	4.0	5.0	5.0	4.0
Minimum Green (s)	24.0	24.0	4.0	24.0	24.0	4.0	7.0	7.0	4.0	7.0	7.0	4.0
Refr Cycle Length (s)	120	120	120	120	120	120	120	120	120	120	120	120
Volume Combined (vph)	89	1700	0	10	767	0	0	40	0	0	62	0
Lane Utilization Factor	1.00	0.95	1.00	1.00	0.95	1.00	1.00	0.95	1.00	1.00	0.95	1.00
Turning Factor (vph)	0.95	1.00	0.85	0.95	0.99	0.85	0.95	0.96	0.85	0.95	0.95	0.85
Saturated Flow (vph)	1805	3614	0	1805	3597	0	0	3478	0	0	3430	0
Ped Intf Time (s)	0.0	0.0	0.0	0.0	0.0	0.0	0.0	0.0	0.0	0.0	0.0	0.0
Pedestrian Frequency (%)		0.00			0.00			0.00			0.00	
Protected Option Allowed		Yes			Yes			No			No	
Reference Time (s)	5.9	56.4	0.0	0.7	25.6	0.0			0.0			0.0
Adj Reference Time (s)	29.0	61.4	0.0	29.0	30.6	0.0			0.0			0.0
Permitted Option												
Adj Saturation A (vph)	120	1807		120	1799		0	116		0	114	
Reference Time A (s)	88.8	56.4		10.0	25.6		0.0	7.2		0.0	17.8	
Adj Saturation B (vph	NA	NA		NA	NA		0	1743		0	1712	
Reference Time B (s)	NA	NA		NA	NA		8.5	5.4		9.1	6.2	
Reference Time (s)		88.8			25.6			7.2			9.1	
Adj Reference Time (s)		93.8			30.6			12.2			14.1	
Split Option												
Ref Time Combined (s)	5.9	56.4		0.7	25.6		0.0	1.4		0.0	2.2	
Ref Time Seperate (s)	5.9	56.1		0.7	24.6		0.5	0.9		1.1	1.0	
Reference Time (s)	56.4	56.4		25.6	25.6		1.4	1.4		2.2	2.2	
Adj Reference Time (s)	61.4	61.4		30.6	30.6		12.0	12.0		12.0	12.0	

Summary	EB WB	NB SB	Combined
Protected Option (s)	90.4	NA	
Permitted Option (s)	93.8	14.1	
Split Option (s)	92.0	24.0	
Minimum (s)	90.4	14.1	104.6

Right Turns
Adj Reference Time (s)
Cross Thru Ref Time (s)
Oncoming Left Ref Time (s)
Combined (s)

Intersection Summary			
Intersection Capacity Utilization	87.1%	ICU Level of Service	E

Reference Times and Phasing Options do not represent an optimized timing plan.

This document was created by an application that isn't licensed to use novaPDF.
Purchase a license to generate PDF files without this notice.

Intersection Capacity Utilization
1: E Street & 9th Street

01-24-2024

Movement	EBL	EBT	EBR	WBL	WBT	WBR	NBL	NBT	NBR	SBL	SBT	SBR
Lane Configurations												
Volume (vph)	53	472	33	42	566	77	37	348	49	56	244	41
Pedestrians												
Ped Button												
Pedestrian Timing (s)												
Free Right			No			No			No			No
Ideal Flow	1600	1600	1600	1600	1600	1600	1600	1600	1600	1600	1600	1600
Lost Time (s)	4.0	5.0	4.0	4.0	5.0	4.0	4.0	5.1	4.0	4.0	5.1	4.0
Minimum Green (s)	7.0	6.0	4.0	8.0	6.0	4.0	8.0	10.0	4.0	9.0	10.0	4.0
Refr Cycle Length (s)	120	120	120	120	120	120	120	120	120	120	120	120
Volume Combined (vph)	53	505	0	42	643	0	37	397	0	56	285	0
Lane Utilization Factor	1.00	0.95	1.00	1.00	0.95	1.00	1.00	1.00	1.00	1.00	1.00	1.00
Turning Factor (vph)	0.95	0.99	0.85	0.95	0.98	0.85	0.95	0.98	0.85	0.95	0.98	0.85
Saturated Flow (vph)	1520	3017	0	1520	2992	0	1520	1570	0	1520	1565	0
Ped Intf Time (s)	0.0	0.0	0.0	0.0	0.0	0.0	0.0	0.0	0.0	0.0	0.0	0.0
Pedestrian Frequency (%)		0.00			0.00			0.00			0.00	
Protected Option Allowed		Yes			Yes			Yes			Yes	
Reference Time (s)	4.2	20.1	0.0	3.3	25.8	0.0	2.9	30.3	0.0	4.4	21.8	0.0
Adj Reference Time (s)	11.0	25.1	0.0	12.0	30.8	0.0	12.0	35.4	0.0	13.0	26.9	0.0
Permitted Option												
Adj Saturation A (vph)	101	1508		101	1496		101	1570		101	1565	
Reference Time A (s)	62.8	20.1		49.7	25.8		43.8	30.3		66.3	21.8	
Adj Saturation B (vph	NA	NA		NA	NA		NA	NA		NA	NA	
Reference Time B (s)	NA	NA		NA	NA		NA	NA		NA	NA	
Reference Time (s)		62.8			49.7			43.8			66.3	
Adj Reference Time (s)		67.8			54.7			48.9			71.4	
Split Option												
Ref Time Combined (s)	4.2	20.1		3.3	25.8		2.9	30.3		4.4	21.8	
Ref Time Seperate (s)	4.2	18.8		3.3	22.7		2.9	26.6		4.4	18.7	
Reference Time (s)	20.1	20.1		25.8	25.8		30.3	30.3		21.8	21.8	
Adj Reference Time (s)	25.1	25.1		30.8	30.8		35.4	35.4		26.9	26.9	

Summary	EB WB	NB SB	Combined
Protected Option (s)	41.8	48.4	
Permitted Option (s)	67.8	71.4	
Split Option (s)	55.9	62.4	
Minimum (s)	41.8	48.4	90.2

Right Turns
Adj Reference Time (s)
Cross Thru Ref Time (s)
Oncoming Left Ref Time (s)
Combined (s)

Intersection Summary			
Intersection Capacity Utilization	75.2%	ICU Level of Service	D

Reference Times and Phasing Options do not represent an optimized timing plan.

This document was created by an application that isn't licensed to use novaPDF.
Purchase a license to generate PDF files without this notice.

Movement	EBL	EBT	EBR	WBL	WBT	WBR	NBL	NBT	NBR	SBL	SBT	SBR
Lane Configurations												
Volume (vph)	26	37	17	14	34	21	26	396	14	7	311	13
Pedestrians												
Ped Button												
Pedestrian Timing (s)												
Free Right			No			No			No			No
Ideal Flow	1600	1600	1600	1600	1600	1600	1600	1600	1600	1600	1600	1600
Lost Time (s)	4.6	4.6	4.0	4.6	4.6	4.0	4.0	5.0	4.0	4.0	5.0	4.0
Minimum Green (s)	7.0	7.0	4.0	7.0	7.0	4.0	8.0	10.0	4.0	9.0	10.0	4.0
Refr Cycle Length (s)	120	120	120	120	120	120	120	120	120	120	120	120
Volume Combined (vph)	0	80	0	0	69	0	26	410	0	7	324	0
Lane Utilization Factor	1.00	1.00	1.00	1.00	1.00	1.00	1.00	1.00	1.00	1.00	1.00	1.00
Turning Factor (vph)	0.95	0.95	0.85	0.95	0.94	0.85	0.95	0.99	0.85	0.95	0.99	0.85
Saturated Flow (vph)	0	1524	0	0	1511	0	1520	1592	0	1520	1590	0
Ped Intf Time (s)	0.0	0.0	0.0	0.0	0.0	0.0	0.0	0.0	0.0	0.0	0.0	0.0
Pedestrian Frequency (%)		0.00			0.00			0.00			0.00	
Protected Option Allowed		No			No			Yes			Yes	
Reference Time (s)			0.0			0.0	2.1	30.9	0.0	0.6	24.4	0.0
Adj Reference Time (s)			0.0			0.0	12.0	35.9	0.0	13.0	29.4	0.0
Permitted Option												
Adj Saturation A (vph)	0	933		0	1305		101	1592		101	1590	
Reference Time A (s)	0.0	10.3		0.0	6.3		30.8	30.9		8.3	24.4	
Adj Saturation B (vph	0	0		0	0		NA	NA		NA	NA	
Reference Time B (s)	10.1	14.3		9.1	13.5		NA	NA		NA	NA	
Reference Time (s)		10.3			6.3			30.9			24.4	
Adj Reference Time (s)		14.9			11.6			35.9			29.4	
Split Option												
Ref Time Combined (s)	0.0	6.3		0.0	5.5		2.1	30.9		0.6	24.4	
Ref Time Seperate (s)	2.1	2.9		1.1	2.7		2.1	29.9		0.6	23.5	
Reference Time (s)	6.3	6.3		5.5	5.5		30.9	30.9		24.4	24.4	
Adj Reference Time (s)	11.6	11.6		11.6	11.6		35.9	35.9		29.4	29.4	

Summary	EB WB	NB SB	Combined
Protected Option (s)	NA	48.9	
Permitted Option (s)	14.9	35.9	
Split Option (s)	23.2	65.4	
Minimum (s)	14.9	35.9	50.8

Right Turns
Adj Reference Time (s)
Cross Thru Ref Time (s)
Oncoming Left Ref Time (s)
Combined (s)

Intersection Summary			
Intersection Capacity Utilization	42.3%	ICU Level of Service	A

Reference Times and Phasing Options do not represent an optimized timing plan.

This document was created by an application that isn't licensed to use novaPDF.
Purchase a license to generate PDF files without this notice.

Movement	EBL	EBT	EBR	WBL	WBT	WBR	NBL	NBT	NBR	SBL	SBT	SBR
Lane Configurations												
Volume (vph)	10	70	13	61	220	17	29	383	29	21	342	35
Pedestrians												
Ped Button												
Pedestrian Timing (s)												
Free Right			No			No			No			No
Ideal Flow	1900	1900	1900	1900	1900	1900	1900	1900	1900	1900	1900	1900
Lost Time (s)	5.0	5.0	4.0	5.0	5.0	4.0	4.0	5.0	4.0	4.0	5.0	4.0
Minimum Green (s)	7.0	7.0	4.0	7.0	7.0	4.0	8.0	10.0	4.0	9.0	10.0	4.0
Refr Cycle Length (s)	120	120	120	120	120	120	120	120	120	120	120	120
Volume Combined (vph)	10	83	0	61	237	0	29	412	0	21	377	0
Lane Utilization Factor	1.00	0.95	1.00	1.00	0.95	1.00	1.00	1.00	1.00	1.00	1.00	1.00
Turning Factor (vph)	0.95	0.98	0.85	0.95	0.99	0.85	0.95	0.99	0.85	0.95	0.99	0.85
Saturated Flow (vph)	1805	3533	0	1805	3579	0	1805	1880	0	1805	1874	0
Ped Intf Time (s)	0.0	0.0	0.0	0.0	0.0	0.0	0.0	0.0	0.0	0.0	0.0	0.0
Pedestrian Frequency (%)		0.00			0.00			0.00			0.00	
Protected Option Allowed		Yes			Yes			Yes			Yes	
Reference Time (s)	0.7	2.8	0.0	4.1	7.9	0.0	1.9	26.3	0.0	1.4	24.1	0.0
Adj Reference Time (s)	12.0	12.0	0.0	12.0	12.9	0.0	12.0	31.3	0.0	13.0	29.1	0.0
Permitted Option												
Adj Saturation A (vph)	120	1766		120	1789		120	1880		120	1874	
Reference Time A (s)	10.0	2.8		60.8	7.9		28.9	26.3		20.9	24.1	
Adj Saturation B (vph	NA	NA		0	3579		NA	NA		NA	NA	
Reference Time B (s)	NA	NA		12.1	7.9		NA	NA		NA	NA	
Reference Time (s)		10.0			12.1			28.9			24.1	
Adj Reference Time (s)		15.0			17.1			33.9			29.1	
Split Option												
Ref Time Combined (s)	0.7	2.8		4.1	7.9		1.9	26.3		1.4	24.1	
Ref Time Seperate (s)	0.7	2.4		4.1	7.4		1.9	24.4		1.4	21.9	
Reference Time (s)	2.8	2.8		7.9	7.9		26.3	26.3		24.1	24.1	
Adj Reference Time (s)	12.0	12.0		12.9	12.9		31.3	31.3		29.1	29.1	

Summary	EB WB	NB SB	Combined
Protected Option (s)	24.9	44.3	
Permitted Option (s)	17.1	33.9	
Split Option (s)	24.9	60.4	
Minimum (s)	17.1	33.9	51.0

Right Turns
Adj Reference Time (s)
Cross Thru Ref Time (s)
Oncoming Left Ref Time (s)
Combined (s)

Intersection Summary			
Intersection Capacity Utilization	42.5%	ICU Level of Service	A

Reference Times and Phasing Options do not represent an optimized timing plan.

This document was created by an application that isn't licensed to use novaPDF.
Purchase a license to generate PDF files without this notice.

Movement	EBL	EBT	EBR	WBL	WBT	WBR	NBL	NBT	NBR	SBL	SBT	SBR
Lane Configurations												
Volume (vph)	31	1005	53	44	1264	45	100	371	66	58	233	77
Pedestrians												
Ped Button												
Pedestrian Timing (s)												
Free Right			No			No			No			No
Ideal Flow	1900	1900	1900	1900	1900	1900	1900	1900	1900	1900	1900	1900
Lost Time (s)	5.0	5.0	4.0	5.0	5.0	4.0	4.0	6.0	4.0	4.0	6.0	4.0
Minimum Green (s)	9.0	9.0	4.0	9.0	9.0	4.0	9.0	9.0	4.0	9.0	9.0	4.0
Refr Cycle Length (s)	120	120	120	120	120	120	120	120	120	120	120	120
Volume Combined (vph)	31	1058	0	44	1309	0	100	437	0	58	310	0
Lane Utilization Factor	1.00	0.95	1.00	1.00	0.95	1.00	1.00	1.00	1.00	1.00	1.00	1.00
Turning Factor (vph)	0.95	0.99	0.85	0.95	0.99	0.85	0.95	0.98	0.85	0.95	0.96	0.85
Saturated Flow (vph)	1805	3590	0	1805	3599	0	1805	1857	0	1805	1829	0
Ped Intf Time (s)	0.0	0.0	0.0	0.0	0.0	0.0	0.0	0.0	0.0	0.0	0.0	0.0
Pedestrian Frequency (%)		0.00			0.00			0.00			0.00	
Protected Option Allowed		Yes			Yes			Yes			Yes	
Reference Time (s)	2.1	35.4	0.0	2.9	43.6	0.0	6.6	28.2	0.0	3.9	20.3	0.0
Adj Reference Time (s)	14.0	40.4	0.0	14.0	48.6	0.0	13.0	34.2	0.0	13.0	26.3	0.0
Permitted Option												
Adj Saturation A (vph)	120	1795		120	1799		120	1857		120	1829	
Reference Time A (s)	30.9	35.4		43.9	43.6		99.7	28.2		57.8	20.3	
Adj Saturation B (vph	NA	NA		NA	NA		NA	NA		NA	NA	
Reference Time B (s)	NA	NA		NA	NA		NA	NA		NA	NA	
Reference Time (s)		35.4			43.9			99.7			57.8	
Adj Reference Time (s)		40.4			48.9			105.7			63.8	
Split Option												
Ref Time Combined (s)	2.1	35.4		2.9	43.6		6.6	28.2		3.9	20.3	
Ref Time Seperate (s)	2.1	33.6		2.9	42.1		6.6	24.0		3.9	15.3	
Reference Time (s)	35.4	35.4		43.6	43.6		28.2	28.2		20.3	20.3	
Adj Reference Time (s)	40.4	40.4		48.6	48.6		34.2	34.2		26.3	26.3	

Summary	EB WB	NB SB	Combined
Protected Option (s)	62.6	47.2	
Permitted Option (s)	48.9	105.7	
Split Option (s)	89.0	60.6	
Minimum (s)	48.9	47.2	96.1

Right Turns
Adj Reference Time (s)
Cross Thru Ref Time (s)
Oncoming Left Ref Time (s)
Combined (s)

Intersection Summary			
Intersection Capacity Utilization	80.1%	ICU Level of Service	D

Reference Times and Phasing Options do not represent an optimized timing plan.

This document was created by an application that isn't licensed to use novaPDF.
Purchase a license to generate PDF files without this notice.

Movement	EBL	EBT	EBR	WBL	WBT	WBR	NBL	NBT	NBR	SBL	SBT	SBR
Lane Configurations												
Volume (vph)	18	521	41	13	628	27	49	91	21	14	37	30
Pedestrians												
Ped Button												
Pedestrian Timing (s)												
Free Right			No			No			No			No
Ideal Flow	1900	1900	1900	1900	1900	1900	1900	1900	1900	1900	1900	1900
Lost Time (s)	5.0	5.0	4.0	5.0	5.0	4.0	5.0	5.0	4.0	5.0	5.0	4.0
Minimum Green (s)	21.0	21.0	4.0	21.0	21.0	4.0	17.0	17.0	4.0	17.0	17.0	4.0
Refr Cycle Length (s)	120	120	120	120	120	120	120	120	120	120	120	120
Volume Combined (vph)	0	580	0	0	668	0	0	161	0	0	81	0
Lane Utilization Factor	1.00	0.95	1.00	1.00	0.95	1.00	1.00	0.95	1.00	1.00	0.95	1.00
Turning Factor (vph)	0.95	0.99	0.85	0.95	0.99	0.85	0.95	0.97	0.85	0.95	0.94	0.85
Saturated Flow (vph)	0	3574	0	0	3592	0	0	3493	0	0	3387	0
Ped Intf Time (s)	0.0	0.0	0.0	0.0	0.0	0.0	0.0	0.0	0.0	0.0	0.0	0.0
Pedestrian Frequency (%)		0.00			0.00			0.00			0.00	
Protected Option Allowed		No			No			No			No	
Reference Time (s)			0.0			0.0			0.0			0.0
Adj Reference Time (s)			0.0			0.0			0.0			0.0
Permitted Option												
Adj Saturation A (vph)	0	880		0	1119		0	116		0	113	
Reference Time A (s)	0.0	34.7		0.0	33.0		0.0	50.5		0.0	14.9	
Adj Saturation B (vph	NA	NA		NA	NA		0	1758		0	1687	
Reference Time B (s)	NA	NA		NA	NA		11.3	9.5		8.9	6.9	
Reference Time (s)		34.7			33.0			11.3			8.9	
Adj Reference Time (s)		39.7			38.0			22.0			22.0	
Split Option												
Ref Time Combined (s)	0.0	19.5		0.0	22.3		0.0	5.5		0.0	2.9	
Ref Time Seperate (s)	1.2	17.5		0.9	21.0		3.3	3.1		0.9	1.3	
Reference Time (s)	19.5	19.5		22.3	22.3		5.5	5.5		2.9	2.9	
Adj Reference Time (s)	26.0	26.0		27.3	27.3		22.0	22.0		22.0	22.0	

Summary	EB WB	NB SB	Combined
Protected Option (s)	NA	NA	
Permitted Option (s)	39.7	22.0	
Split Option (s)	53.3	44.0	
Minimum (s)	39.7	22.0	61.7

Right Turns
Adj Reference Time (s)
Cross Thru Ref Time (s)
Oncoming Left Ref Time (s)
Combined (s)

Intersection Summary			
Intersection Capacity Utilization	51.4%	ICU Level of Service	A

Reference Times and Phasing Options do not represent an optimized timing plan.

This document was created by an application that isn't licensed to use novaPDF.
Purchase a license to generate PDF files without this notice.

Movement	EBL	EBT	EBR	WBL	WBT	WBR	NBL	NBT	NBR	SBL	SBT	SBR
Lane Configurations												
Volume (vph)	6	18	11	23	37	38	19	122	9	17	50	17
Pedestrians												
Ped Button												
Pedestrian Timing (s)												
Free Right			No			No			No			No
Ideal Flow	1900	1900	1900	1900	1900	1900	1900	1900	1900	1900	1900	1900
Lost Time (s)	4.0	4.0	4.0	4.0	4.0	4.0	4.0	4.0	4.0	4.0	4.0	4.0
Minimum Green (s)	4.0	4.0	4.0	4.0	4.0	4.0	4.0	4.0	4.0	4.0	4.0	4.0
Refr Cycle Length (s)	120	120	120	120	120	120	120	120	120	120	120	120
Volume Combined (vph)	0	35	0	0	98	0	0	141	9	0	67	17
Lane Utilization Factor	1.00	1.00	1.00	1.00	1.00	1.00	1.00	1.00	1.00	1.00	1.00	1.00
Turning Factor (vph)	0.95	0.94	0.85	0.95	0.93	0.85	0.95	0.99	0.85	0.95	0.99	0.85
Saturated Flow (vph)	0	1795	0	0	1768	0	0	1887	1615	0	1876	1615
Ped Intf Time (s)	0.0	0.0	0.0	0.0	0.0	0.0	0.0	0.0	0.0	0.0	0.0	0.0
Pedestrian Frequency (%)		0.00			0.00			0.00			0.00	
Protected Option Allowed		No			No			No			No	
Reference Time (s)			0.0			0.0			0.7			1.3
Adj Reference Time (s)			0.0			0.0			8.0			8.0
Permitted Option												
Adj Saturation A (vph)	0	1469		0	1174		0	627		0	383	
Reference Time A (s)	0.0	2.9		0.0	10.0		0.0	27.0		0.0	21.0	
Adj Saturation B (vph	0	0		0	0		0	0		NA	NA	
Reference Time B (s)	8.4	10.3		9.5	14.6		9.3	17.0		NA	NA	
Reference Time (s)		2.9			10.0			17.0			21.0	
Adj Reference Time (s)		8.0			14.0			21.0			25.0	
Split Option												
Ref Time Combined (s)	0.0	2.3		0.0	6.6		0.0	9.0		0.0	4.3	
Ref Time Seperate (s)	0.4	1.2		1.5	2.5		1.3	7.7		1.1	3.2	
Reference Time (s)	2.3	2.3		6.6	6.6		9.0	9.0		4.3	4.3	
Adj Reference Time (s)	8.0	8.0		10.6	10.6		13.0	13.0		8.3	8.3	

Summary	EB WB	NB SB	Combined
Protected Option (s)	NA	NA	
Permitted Option (s)	14.0	25.0	
Split Option (s)	18.6	21.3	
Minimum (s)	14.0	21.3	35.3

Right Turns	NBR	SBR
Adj Reference Time (s)	8.0	8.0
Cross Thru Ref Time (s)	8.0	10.6
Oncoming Left Ref Time (s)	8.3	13.0
Combined (s)	24.3	31.6

Intersection Summary			
Intersection Capacity Utilization	29.4%	ICU Level of Service	A

Reference Times and Phasing Options do not represent an optimized timing plan.

This document was created by an application that isn't licensed to use novaPDF.
Purchase a license to generate PDF files without this notice.

Movement	EBL	EBT	EBR	WBL	WBT	WBR	NBL	NBT	NBR	SBL	SBT	SBR
Lane Configurations												
Volume (vph)	19	66	19	18	244	21	44	85	21	9	79	44
Pedestrians												
Ped Button												
Pedestrian Timing (s)												
Free Right			No			No			No			No
Ideal Flow	1900	1900	1900	1900	1900	1900	1900	1900	1900	1900	1900	1900
Lost Time (s)	4.5	4.5	4.5	4.5	4.5	4.5	4.5	4.5	4.0	4.5	4.5	4.0
Minimum Green (s)	22.0	22.0	22.0	22.0	22.0	22.0	19.0	19.0	4.0	19.0	19.0	4.0
Refr Cycle Length (s)	120	120	120	120	120	120	120	120	120	120	120	120
Volume Combined (vph)	19	66	19	18	244	21	0	150	0	0	132	0
Lane Utilization Factor	1.00	1.00	1.00	1.00	1.00	1.00	1.00	0.95	1.00	1.00	0.95	1.00
Turning Factor (vph)	0.95	1.00	0.85	0.95	1.00	0.85	0.95	0.96	0.85	0.95	0.95	0.85
Saturated Flow (vph)	1805	1900	1615	1805	1900	1615	0	3490	0	0	3425	0
Ped Intf Time (s)	0.0	0.0	0.0	0.0	0.0	0.0	0.0	0.0	0.0	0.0	0.0	0.0
Pedestrian Frequency (%)		0.00			0.00			0.00			0.00	
Protected Option Allowed		Yes			Yes			No			No	
Reference Time (s)	1.3	4.2	1.4	1.2	15.4	1.6			0.0			0.0
Adj Reference Time (s)	26.5	26.5	26.5	26.5	26.5	26.5			0.0			0.0
Permitted Option												
Adj Saturation A (vph)	120	1900		120	1900		0	116		0	446	
Reference Time A (s)	18.9	4.2		18.0	15.4		0.0	45.4		0.0	12.9	
Adj Saturation B (vph	NA	NA		0	1900		NA	NA		0	1712	
Reference Time B (s)	NA	NA		9.2	15.4		NA	NA		8.6	8.6	
Reference Time (s)		18.9			15.4			45.4			8.6	
Adj Reference Time (s)		26.5			26.5			49.9			23.5	
Split Option												
Ref Time Combined (s)	1.3	4.2		1.2	15.4		0.0	5.2		0.0	4.6	
Ref Time Seperate (s)	1.3	4.2		1.2	15.4		2.9	2.9		0.6	2.8	
Reference Time (s)	4.2	4.2		15.4	15.4		5.2	5.2		4.6	4.6	
Adj Reference Time (s)	26.5	26.5		26.5	26.5		23.5	23.5		23.5	23.5	

Summary	EB WB	NB SB	Combined
Protected Option (s)	53.0	NA	
Permitted Option (s)	26.5	49.9	
Split Option (s)	53.0	47.0	
Minimum (s)	26.5	47.0	73.5

Right Turns	EBR	WBR
Adj Reference Time (s)	26.5	26.5
Cross Thru Ref Time (s)	23.5	23.5
Oncoming Left Ref Time (s)	26.5	26.5
Combined (s)	76.5	76.5

Intersection Summary			
Intersection Capacity Utilization	63.7%	ICU Level of Service	B

Reference Times and Phasing Options do not represent an optimized timing plan.

This document was created by an application that isn't licensed to use novaPDF.
Purchase a license to generate PDF files without this notice.

Movement	EBL	EBT	EBR	WBL	WBT	WBR	NBL	NBT	NBR	SBL	SBT	SBR
Lane Configurations												
Volume (vph)	85	992	50	14	1377	23	34	44	19	27	52	107
Pedestrians												
Ped Button												
Pedestrian Timing (s)												
Free Right			No			No			No			No
Ideal Flow	1900	1900	1900	1900	1900	1900	1900	1900	1900	1900	1900	1900
Lost Time (s)	5.0	5.0	4.0	5.0	5.0	4.0	5.0	5.0	4.0	5.0	5.0	4.0
Minimum Green (s)	24.0	24.0	4.0	24.0	24.0	4.0	7.0	7.0	4.0	7.0	7.0	4.0
Refr Cycle Length (s)	120	120	120	120	120	120	120	120	120	120	120	120
Volume Combined (vph)	85	1042	0	14	1400	0	0	97	0	0	186	0
Lane Utilization Factor	1.00	0.95	1.00	1.00	0.95	1.00	1.00	0.95	1.00	1.00	0.95	1.00
Turning Factor (vph)	0.95	0.99	0.85	0.95	1.00	0.85	0.95	0.95	0.85	0.95	0.91	0.85
Saturated Flow (vph)	1805	3592	0	1805	3609	0	0	3450	0	0	3281	0
Ped Intf Time (s)	0.0	0.0	0.0	0.0	0.0	0.0	0.0	0.0	0.0	0.0	0.0	0.0
Pedestrian Frequency (%)		0.00			0.00			0.00			0.00	
Protected Option Allowed		Yes			Yes			No			No	
Reference Time (s)	5.7	34.8	0.0	0.9	46.6	0.0			0.0			0.0
Adj Reference Time (s)	29.0	39.8	0.0	29.0	51.6	0.0			0.0			0.0
Permitted Option												
Adj Saturation A (vph)	120	1796		120	1804		0	115		0	143	
Reference Time A (s)	84.8	34.8		14.0	46.6		0.0	35.5		0.0	32.7	
Adj Saturation B (vph	NA	NA		NA	NA		NA	NA		0	1626	
Reference Time B (s)	NA	NA		NA	NA		NA	NA		9.8	10.8	
Reference Time (s)		84.8			46.6			35.5			10.8	
Adj Reference Time (s)		89.8			51.6			40.5			15.8	
Split Option												
Ref Time Combined (s)	5.7	34.8		0.9	46.6		0.0	3.4		0.0	6.8	
Ref Time Seperate (s)	5.7	33.1		0.9	45.8		2.3	1.5		1.8	1.9	
Reference Time (s)	34.8	34.8		46.6	46.6		3.4	3.4		6.8	6.8	
Adj Reference Time (s)	39.8	39.8		51.6	51.6		12.0	12.0		12.0	12.0	

Summary	EB WB	NB SB	Combined
Protected Option (s)	80.6	NA	
Permitted Option (s)	89.8	40.5	
Split Option (s)	91.4	24.0	
Minimum (s)	80.6	24.0	104.6

Right Turns
Adj Reference Time (s)
Cross Thru Ref Time (s)
Oncoming Left Ref Time (s)
Combined (s)

Intersection Summary			
Intersection Capacity Utilization	87.1%	ICU Level of Service	E

Reference Times and Phasing Options do not represent an optimized timing plan.

This document was created by an application that isn't licensed to use novaPDF.
Purchase a license to generate PDF files without this notice.

Intersection Capacity Utilization
1: E Street & 9th Street

08-14-2024

Movement	EBL	EBT	EBR	WBL	WBT	WBR	NBL	NBT	NBR	SBL	SBT	SBR
Lane Configurations												
Volume (vph)	11	332	24	36	306	51	11	96	15	40	152	18
Pedestrians												
Ped Button												
Pedestrian Timing (s)												
Free Right			No			No			No			No
Ideal Flow	1600	1600	1600	1600	1600	1600	1600	1600	1600	1600	1600	1600
Lost Time (s)	4.0	5.0	4.0	4.0	5.0	4.0	4.0	5.1	4.0	4.0	5.1	4.0
Minimum Green (s)	7.0	6.0	4.0	8.0	6.0	4.0	8.0	10.0	4.0	9.0	10.0	4.0
Refr Cycle Length (s)	120	120	120	120	120	120	120	120	120	120	120	120
Volume Combined (vph)	11	356	0	36	357	0	11	111	0	40	170	0
Lane Utilization Factor	1.00	0.95	1.00	1.00	0.95	1.00	1.00	1.00	1.00	1.00	1.00	1.00
Turning Factor (vph)	0.95	0.99	0.85	0.95	0.98	0.85	0.95	0.98	0.85	0.95	0.98	0.85
Saturated Flow (vph)	1520	3016	0	1520	2981	0	1520	1568	0	1520	1575	0
Ped Intf Time (s)	0.0	0.0	0.0	0.0	0.0	0.0	0.0	0.0	0.0	0.0	0.0	0.0
Pedestrian Frequency (%)		0.00			0.00			0.00			0.00	
Protected Option Allowed		Yes			Yes			Yes			Yes	
Reference Time (s)	0.9	14.2	0.0	2.8	14.4	0.0	0.9	8.5	0.0	3.2	13.0	0.0
Adj Reference Time (s)	11.0	19.2	0.0	12.0	19.4	0.0	12.0	15.1	0.0	13.0	18.1	0.0
Permitted Option												
Adj Saturation A (vph)	101	1508		101	1491		101	1568		101	1575	
Reference Time A (s)	13.0	14.2		42.6	14.4		13.0	8.5		47.4	13.0	
Adj Saturation B (vph	NA	NA		NA	NA		NA	NA		0	1575	
Reference Time B (s)	NA	NA		NA	NA		NA	NA		11.2	13.0	
Reference Time (s)		14.2			42.6			13.0			13.0	
Adj Reference Time (s)		19.2			47.6			18.1			18.1	
Split Option												
Ref Time Combined (s)	0.9	14.2		2.8	14.4		0.9	8.5		3.2	13.0	
Ref Time Seperate (s)	0.9	13.2		2.8	12.3		0.9	7.3		3.2	11.6	
Reference Time (s)	14.2	14.2		14.4	14.4		8.5	8.5		13.0	13.0	
Adj Reference Time (s)	19.2	19.2		19.4	19.4		15.1	15.1		18.1	18.1	

Summary	EB WB	NB SB	Combined
Protected Option (s)	31.2	30.1	
Permitted Option (s)	47.6	18.1	
Split Option (s)	38.5	33.2	
Minimum (s)	31.2	18.1	49.3

Right Turns
Adj Reference Time (s)
Cross Thru Ref Time (s)
Oncoming Left Ref Time (s)
Combined (s)

Intersection Summary			
Intersection Capacity Utilization	41.1%	ICU Level of Service	A

Reference Times and Phasing Options do not represent an optimized timing plan.

Movement	EBL	EBT	EBR	WBL	WBT	WBR	NBL	NBT	NBR	SBL	SBT	SBR
Lane Configurations												
Volume (vph)	2	15	4	2	21	4	13	136	19	3	183	12
Pedestrians												
Ped Button												
Pedestrian Timing (s)												
Free Right			No			No			No			No
Ideal Flow	1600	1600	1600	1600	1600	1600	1600	1600	1600	1600	1600	1600
Lost Time (s)	4.6	4.6	4.0	4.6	4.6	4.0	4.0	5.0	4.0	4.0	5.0	4.0
Minimum Green (s)	7.0	7.0	4.0	7.0	7.0	4.0	8.0	10.0	4.0	9.0	10.0	4.0
Refr Cycle Length (s)	120	120	120	120	120	120	120	120	120	120	120	120
Volume Combined (vph)	0	21	0	0	27	0	13	155	0	3	195	0
Lane Utilization Factor	1.00	1.00	1.00	1.00	1.00	1.00	1.00	1.00	1.00	1.00	1.00	1.00
Turning Factor (vph)	0.95	0.97	0.85	0.95	0.97	0.85	0.95	0.98	0.85	0.95	0.99	0.85
Saturated Flow (vph)	0	1547	0	0	1559	0	1520	1571	0	1520	1585	0
Ped Intf Time (s)	0.0	0.0	0.0	0.0	0.0	0.0	0.0	0.0	0.0	0.0	0.0	0.0
Pedestrian Frequency (%)		0.00			0.00			0.00			0.00	
Protected Option Allowed		No			No			Yes			Yes	
Reference Time (s)			0.0			0.0	1.0	11.8	0.0	0.2	14.8	0.0
Adj Reference Time (s)			0.0			0.0	12.0	16.8	0.0	13.0	19.8	0.0
Permitted Option												
Adj Saturation A (vph)	0	1106		0	1256		101	1571		101	1585	
Reference Time A (s)	0.0	2.3		0.0	2.6		15.4	11.8		3.6	14.8	
Adj Saturation B (vph	0	0		0	0		NA	NA		NA	NA	
Reference Time B (s)	8.2	9.6		8.2	10.1		NA	NA		NA	NA	
Reference Time (s)		2.3			2.6			15.4			14.8	
Adj Reference Time (s)		11.6			11.6			20.4			19.8	
Split Option												
Ref Time Combined (s)	0.0	1.6		0.0	2.1		1.0	11.8		0.2	14.8	
Ref Time Seperate (s)	0.2	1.2		0.2	1.6		1.0	10.4		0.2	13.9	
Reference Time (s)	1.6	1.6		2.1	2.1		11.8	11.8		14.8	14.8	
Adj Reference Time (s)	11.6	11.6		11.6	11.6		16.8	16.8		19.8	19.8	

Summary	EB WB	NB SB	Combined
Protected Option (s)	NA	31.8	
Permitted Option (s)	11.6	20.4	
Split Option (s)	23.2	36.6	
Minimum (s)	11.6	20.4	32.0

Right Turns
Adj Reference Time (s)
Cross Thru Ref Time (s)
Oncoming Left Ref Time (s)
Combined (s)

Intersection Summary			
Intersection Capacity Utilization	26.7%	ICU Level of Service	A

Reference Times and Phasing Options do not represent an optimized timing plan.

Movement	EBL	EBT	EBR	WBL	WBT	WBR	NBL	NBT	NBR	SBL	SBT	SBR
Lane Configurations												
Volume (vph)	30	92	25	11	42	9	14	151	43	12	174	10
Pedestrians												
Ped Button												
Pedestrian Timing (s)												
Free Right			No			No			No			No
Ideal Flow	1900	1900	1900	1900	1900	1900	1900	1900	1900	1900	1900	1900
Lost Time (s)	5.0	5.0	4.0	5.0	5.0	4.0	4.0	5.0	4.0	4.0	5.0	4.0
Minimum Green (s)	7.0	7.0	4.0	7.0	7.0	4.0	8.0	10.0	4.0	9.0	10.0	4.0
Refr Cycle Length (s)	120	120	120	120	120	120	120	120	120	120	120	120
Volume Combined (vph)	30	117	0	11	51	0	14	194	0	12	184	0
Lane Utilization Factor	1.00	0.95	1.00	1.00	0.95	1.00	1.00	1.00	1.00	1.00	1.00	1.00
Turning Factor (vph)	0.95	0.97	0.85	0.95	0.97	0.85	0.95	0.97	0.85	0.95	0.99	0.85
Saturated Flow (vph)	1805	3502	0	1805	3522	0	1805	1837	0	1805	1885	0
Ped Intf Time (s)	0.0	0.0	0.0	0.0	0.0	0.0	0.0	0.0	0.0	0.0	0.0	0.0
Pedestrian Frequency (%)		0.00			0.00			0.00			0.00	
Protected Option Allowed		Yes			Yes			Yes			Yes	
Reference Time (s)	2.0	4.0	0.0	0.7	1.7	0.0	0.9	12.7	0.0	0.8	11.7	0.0
Adj Reference Time (s)	12.0	12.0	0.0	12.0	12.0	0.0	12.0	17.7	0.0	13.0	16.7	0.0
Permitted Option												
Adj Saturation A (vph)	120	1751		120	1761		120	1837		120	1885	
Reference Time A (s)	29.9	4.0		11.0	1.7		14.0	12.7		12.0	11.7	
Adj Saturation B (vph	0	3502		0	3522		NA	NA		NA	NA	
Reference Time B (s)	10.0	4.0		8.7	1.7		NA	NA		NA	NA	
Reference Time (s)		10.0			8.7			14.0			12.0	
Adj Reference Time (s)		15.0			13.7			19.0			17.0	
Split Option												
Ref Time Combined (s)	2.0	4.0		0.7	1.7		0.9	12.7		0.8	11.7	
Ref Time Seperate (s)	2.0	3.2		0.7	1.4		0.9	9.9		0.8	11.1	
Reference Time (s)	4.0	4.0		1.7	1.7		12.7	12.7		11.7	11.7	
Adj Reference Time (s)	12.0	12.0		12.0	12.0		17.7	17.7		16.7	16.7	

Summary	EB WB	NB SB	Combined
Protected Option (s)	24.0	30.7	
Permitted Option (s)	15.0	19.0	
Split Option (s)	24.0	34.4	
Minimum (s)	15.0	19.0	34.0

Right Turns
Adj Reference Time (s)
Cross Thru Ref Time (s)
Oncoming Left Ref Time (s)
Combined (s)

Intersection Summary			
Intersection Capacity Utilization	28.3%	ICU Level of Service	A

Reference Times and Phasing Options do not represent an optimized timing plan.

Movement	EBL	EBT	EBR	WBL	WBT	WBR	NBL	NBT	NBR	SBL	SBT	SBR
Lane Configurations												
Volume (vph)	99	1104	36	12	513	15	20	92	26	25	141	28
Pedestrians												
Ped Button												
Pedestrian Timing (s)												
Free Right			No			No			No			No
Ideal Flow	1900	1900	1900	1900	1900	1900	1900	1900	1900	1900	1900	1900
Lost Time (s)	5.0	5.0	4.0	5.0	5.0	4.0	4.0	6.0	4.0	4.0	6.0	4.0
Minimum Green (s)	9.0	9.0	4.0	9.0	9.0	4.0	9.0	9.0	4.0	9.0	9.0	4.0
Refr Cycle Length (s)	120	120	120	120	120	120	120	120	120	120	120	120
Volume Combined (vph)	99	1140	0	12	528	0	20	118	0	25	169	0
Lane Utilization Factor	1.00	0.95	1.00	1.00	0.95	1.00	1.00	1.00	1.00	1.00	1.00	1.00
Turning Factor (vph)	0.95	1.00	0.85	0.95	1.00	0.85	0.95	0.97	0.85	0.95	0.98	0.85
Saturated Flow (vph)	1805	3600	0	1805	3602	0	1805	1837	0	1805	1853	0
Ped Intf Time (s)	0.0	0.0	0.0	0.0	0.0	0.0	0.0	0.0	0.0	0.0	0.0	0.0
Pedestrian Frequency (%)		0.00			0.00			0.00			0.00	
Protected Option Allowed		Yes			Yes			Yes			Yes	
Reference Time (s)	6.6	38.0	0.0	0.8	17.6	0.0	1.3	7.7	0.0	1.7	10.9	0.0
Adj Reference Time (s)	14.0	43.0	0.0	14.0	22.6	0.0	13.0	15.0	0.0	13.0	16.9	0.0
Permitted Option												
Adj Saturation A (vph)	120	1800		120	1801		120	1837		120	1853	
Reference Time A (s)	98.7	38.0		12.0	17.6		19.9	7.7		24.9	10.9	
Adj Saturation B (vph	NA	NA		NA	NA		NA	NA		0	1853	
Reference Time B (s)	NA	NA		NA	NA		NA	NA		9.7	10.9	
Reference Time (s)		98.7			17.6			19.9			10.9	
Adj Reference Time (s)		103.7			22.6			25.9			16.9	
Split Option												
Ref Time Combined (s)	6.6	38.0		0.8	17.6		1.3	7.7		1.7	10.9	
Ref Time Seperate (s)	6.6	36.8		0.8	17.1		1.3	6.0		1.7	9.1	
Reference Time (s)	38.0	38.0		17.6	17.6		7.7	7.7		10.9	10.9	
Adj Reference Time (s)	43.0	43.0		22.6	22.6		15.0	15.0		16.9	16.9	

Summary	EB WB	NB SB	Combined
Protected Option (s)	57.0	29.9	
Permitted Option (s)	103.7	25.9	
Split Option (s)	65.6	31.9	
Minimum (s)	57.0	25.9	82.9

Right Turns
Adj Reference Time (s)
Cross Thru Ref Time (s)
Oncoming Left Ref Time (s)
Combined (s)

Intersection Summary			
Intersection Capacity Utilization	69.1%	ICU Level of Service	C

Reference Times and Phasing Options do not represent an optimized timing plan.

Movement	EBL	EBT	EBR	WBL	WBT	WBR	NBL	NBT	NBR	SBL	SBT	SBR
Lane Configurations												
Volume (vph)	7	349	68	24	289	16	8	25	10	10	73	12
Pedestrians												
Ped Button												
Pedestrian Timing (s)												
Free Right			No			No			No			No
Ideal Flow	1900	1900	1900	1900	1900	1900	1900	1900	1900	1900	1900	1900
Lost Time (s)	5.0	5.0	4.0	5.0	5.0	4.0	5.0	5.0	4.0	5.0	5.0	4.0
Minimum Green (s)	21.0	21.0	4.0	21.0	21.0	4.0	17.0	17.0	4.0	17.0	17.0	4.0
Refr Cycle Length (s)	120	120	120	120	120	120	120	120	120	120	120	120
Volume Combined (vph)	0	424	0	0	329	0	0	43	0	0	95	0
Lane Utilization Factor	1.00	0.95	1.00	1.00	0.95	1.00	1.00	0.95	1.00	1.00	0.95	1.00
Turning Factor (vph)	0.95	0.98	0.85	0.95	0.99	0.85	0.95	0.96	0.85	0.95	0.98	0.85
Saturated Flow (vph)	0	3528	0	0	3578	0	0	3459	0	0	3530	0
Ped Intf Time (s)	0.0	0.0	0.0	0.0	0.0	0.0	0.0	0.0	0.0	0.0	0.0	0.0
Pedestrian Frequency (%)		0.00			0.00			0.00			0.00	
Protected Option Allowed		No			No			No			No	
Reference Time (s)			0.0			0.0			0.0			0.0
Adj Reference Time (s)			0.0			0.0			0.0			0.0
Permitted Option												
Adj Saturation A (vph)	0	1172		0	433		0	115		0	266	
Reference Time A (s)	0.0	20.3		0.0	32.3		0.0	8.3		0.0	12.4	
Adj Saturation B (vph	NA	NA		NA	NA		0	1731		0	1770	
Reference Time B (s)	NA	NA		NA	NA		8.5	5.5		8.7	7.2	
Reference Time (s)		20.3			32.3			8.3			8.7	
Adj Reference Time (s)		26.0			37.3			22.0			22.0	
Split Option												
Ref Time Combined (s)	0.0	14.4		0.0	11.0		0.0	1.5		0.0	3.2	
Ref Time Seperate (s)	0.5	11.9		1.6	9.7		0.5	0.9		0.7	2.5	
Reference Time (s)	14.4	14.4		11.0	11.0		1.5	1.5		3.2	3.2	
Adj Reference Time (s)	26.0	26.0		26.0	26.0		22.0	22.0		22.0	22.0	

Summary	EB WB	NB SB	Combined
Protected Option (s)	NA	NA	
Permitted Option (s)	37.3	22.0	
Split Option (s)	52.0	44.0	
Minimum (s)	37.3	22.0	59.3

Right Turns
Adj Reference Time (s)
Cross Thru Ref Time (s)
Oncoming Left Ref Time (s)
Combined (s)

Intersection Summary			
Intersection Capacity Utilization	49.4%	ICU Level of Service	A

Reference Times and Phasing Options do not represent an optimized timing plan.

Movement	EBL	EBT	EBR	WBL	WBT	WBR	NBL	NBT	NBR	SBL	SBT	SBR
Lane Configurations												
Volume (vph)	3	9	23	29	9	5	10	53	9	4	150	2
Pedestrians												
Ped Button												
Pedestrian Timing (s)												
Free Right			No			No			No			No
Ideal Flow	1900	1900	1900	1900	1900	1900	1900	1900	1900	1900	1900	1900
Lost Time (s)	4.0	4.0	4.0	4.0	4.0	4.0	4.0	4.0	4.0	4.0	4.0	4.0
Minimum Green (s)	4.0	4.0	4.0	4.0	4.0	4.0	4.0	4.0	4.0	4.0	4.0	4.0
Refr Cycle Length (s)	120	120	120	120	120	120	120	120	120	120	120	120
Volume Combined (vph)	0	35	0	0	43	0	0	63	9	0	154	2
Lane Utilization Factor	1.00	1.00	1.00	1.00	1.00	1.00	1.00	1.00	1.00	1.00	1.00	1.00
Turning Factor (vph)	0.95	0.90	0.85	0.95	0.95	0.85	0.95	0.99	0.85	0.95	1.00	0.85
Saturated Flow (vph)	0	1705	0	0	1804	0	0	1885	1615	0	1898	1615
Ped Intf Time (s)	0.0	0.0	0.0	0.0	0.0	0.0	0.0	0.0	0.0	0.0	0.0	0.0
Pedestrian Frequency (%)		0.00			0.00			0.00			0.00	
Protected Option Allowed		No			No			No			No	
Reference Time (s)			0.0			0.0			0.7			0.1
Adj Reference Time (s)			0.0			0.0			8.0			8.0
Permitted Option												
Adj Saturation A (vph)	0	1736		0	390		0	557		0	1386	
Reference Time A (s)	0.0	2.4		0.0	13.2		0.0	13.6		0.0	13.3	
Adj Saturation B (vph	0	0		0	0		NA	NA		0	0	
Reference Time B (s)	8.2	10.5		9.9	10.9		NA	NA		8.3	17.7	
Reference Time (s)		2.4			10.9			13.6			13.3	
Adj Reference Time (s)		8.0			14.9			17.6			17.3	
Split Option												
Ref Time Combined (s)	0.0	2.5		0.0	2.9		0.0	4.0		0.0	9.7	
Ref Time Seperate (s)	0.2	0.6		1.9	0.6		0.7	3.3		0.3	9.5	
Reference Time (s)	2.5	2.5		2.9	2.9		4.0	4.0		9.7	9.7	
Adj Reference Time (s)	8.0	8.0		8.0	8.0		8.0	8.0		13.7	13.7	

Summary	EB WB	NB SB	Combined
Protected Option (s)	NA	NA	
Permitted Option (s)	14.9	17.6	
Split Option (s)	16.0	21.7	
Minimum (s)	14.9	17.6	32.4

Right Turns	NBR	SBR
Adj Reference Time (s)	8.0	8.0
Cross Thru Ref Time (s)	8.0	8.0
Oncoming Left Ref Time (s)	13.7	8.0
Combined (s)	29.7	24.0

Intersection Summary			
Intersection Capacity Utilization	27.0%	ICU Level of Service	A

Reference Times and Phasing Options do not represent an optimized timing plan.

Movement	EBL	EBT	EBR	WBL	WBT	WBR	NBL	NBT	NBR	SBL	SBT	SBR
Lane Configurations												
Volume (vph)	21	82	18	11	44	12	15	53	38	31	55	52
Pedestrians												
Ped Button												
Pedestrian Timing (s)												
Free Right			No			No			No			No
Ideal Flow	1900	1900	1900	1900	1900	1900	1900	1900	1900	1900	1900	1900
Lost Time (s)	4.5	4.5	4.5	4.5	4.5	4.5	4.5	4.5	4.0	4.5	4.5	4.0
Minimum Green (s)	22.0	22.0	22.0	22.0	22.0	22.0	19.0	19.0	4.0	19.0	19.0	4.0
Refr Cycle Length (s)	120	120	120	120	120	120	120	120	120	120	120	120
Volume Combined (vph)	21	82	18	11	44	12	0	106	0	0	138	0
Lane Utilization Factor	1.00	1.00	1.00	1.00	1.00	1.00	1.00	0.95	1.00	1.00	0.95	1.00
Turning Factor (vph)	0.95	1.00	0.85	0.95	1.00	0.85	0.95	0.94	0.85	0.95	0.93	0.85
Saturated Flow (vph)	1805	1900	1615	1805	1900	1615	0	3399	0	0	3375	0
Ped Intf Time (s)	0.0	0.0	0.0	0.0	0.0	0.0	0.0	0.0	0.0	0.0	0.0	0.0
Pedestrian Frequency (%)		0.00			0.00			0.00			0.00	
Protected Option Allowed		Yes			Yes			No			No	
Reference Time (s)	1.4	5.2	1.3	0.7	2.8	0.9			0.0			0.0
Adj Reference Time (s)	26.5	26.5	26.5	26.5	26.5	26.5			0.0			0.0
Permitted Option												
Adj Saturation A (vph)	120	1900		120	1900		0	155		0	112	
Reference Time A (s)	20.9	5.2		11.0	2.8		0.0	17.8		0.0	33.1	
Adj Saturation B (vph	0	1900		0	1900		0	1696		0	1677	
Reference Time B (s)	9.4	5.2		8.7	2.8		9.0	7.8		10.1	8.9	
Reference Time (s)		9.4			8.7			9.0			10.1	
Adj Reference Time (s)		26.5			26.5			23.5			23.5	
Split Option												
Ref Time Combined (s)	1.4	5.2		0.7	2.8		0.0	3.7		0.0	4.9	
Ref Time Seperate (s)	1.4	5.2		0.7	2.8		1.0	1.9		2.1	2.0	
Reference Time (s)	5.2	5.2		2.8	2.8		3.7	3.7		4.9	4.9	
Adj Reference Time (s)	26.5	26.5		26.5	26.5		23.5	23.5		23.5	23.5	

Summary	EB WB	NB SB	Combined
Protected Option (s)	53.0	NA	
Permitted Option (s)	26.5	23.5	
Split Option (s)	53.0	47.0	
Minimum (s)	26.5	23.5	50.0

Right Turns	EBR	WBR
Adj Reference Time (s)	26.5	26.5
Cross Thru Ref Time (s)	23.5	23.5
Oncoming Left Ref Time (s)	26.5	26.5
Combined (s)	76.5	76.5

Intersection Summary			
Intersection Capacity Utilization	63.7%	ICU Level of Service	B

Reference Times and Phasing Options do not represent an optimized timing plan.

Movement	EBL	EBT	EBR	WBL	WBT	WBR	NBL	NBT	NBR	SBL	SBT	SBR
Lane Configurations												
Volume (vph)	65	1250	6	6	540	20	4	17	5	12	23	19
Pedestrians												
Ped Button												
Pedestrian Timing (s)												
Free Right			No			No			No			No
Ideal Flow	1900	1900	1900	1900	1900	1900	1900	1900	1900	1900	1900	1900
Lost Time (s)	5.0	5.0	4.0	5.0	5.0	4.0	5.0	5.0	4.0	5.0	5.0	4.0
Minimum Green (s)	24.0	24.0	4.0	24.0	24.0	4.0	7.0	7.0	4.0	7.0	7.0	4.0
Refr Cycle Length (s)	120	120	120	120	120	120	120	120	120	120	120	120
Volume Combined (vph)	65	1256	0	6	560	0	0	26	0	0	54	0
Lane Utilization Factor	1.00	0.95	1.00	1.00	0.95	1.00	1.00	0.95	1.00	1.00	0.95	1.00
Turning Factor (vph)	0.95	1.00	0.85	0.95	0.99	0.85	0.95	0.96	0.85	0.95	0.94	0.85
Saturated Flow (vph)	1805	3615	0	1805	3598	0	0	3486	0	0	3389	0
Ped Intf Time (s)	0.0	0.0	0.0	0.0	0.0	0.0	0.0	0.0	0.0	0.0	0.0	0.0
Pedestrian Frequency (%)		0.00			0.00			0.00			0.00	
Protected Option Allowed		Yes			Yes			No			No	
Reference Time (s)	4.3	41.7	0.0	0.4	18.7	0.0			0.0			0.0
Adj Reference Time (s)	29.0	46.7	0.0	29.0	29.0	0.0			0.0			0.0
Permitted Option												
Adj Saturation A (vph)	120	1808		120	1799		0	136		0	113	
Reference Time A (s)	64.8	41.7		6.0	18.7		0.0	4.4		0.0	12.7	
Adj Saturation B (vph	NA	NA		NA	NA		0	1747		0	1686	
Reference Time B (s)	NA	NA		NA	NA		8.3	4.9		8.8	5.9	
Reference Time (s)		64.8			18.7			4.4			8.8	
Adj Reference Time (s)		69.8			29.0			12.0			13.8	
Split Option												
Ref Time Combined (s)	4.3	41.7		0.4	18.7		0.0	0.9		0.0	1.9	
Ref Time Seperate (s)	4.3	41.5		0.4	18.0		0.3	0.6		0.8	0.8	
Reference Time (s)	41.7	41.7		18.7	18.7		0.9	0.9		1.9	1.9	
Adj Reference Time (s)	46.7	46.7		29.0	29.0		12.0	12.0		12.0	12.0	

Summary	EB WB	NB SB	Combined
Protected Option (s)	75.7	NA	
Permitted Option (s)	69.8	13.8	
Split Option (s)	75.7	24.0	
Minimum (s)	69.8	13.8	83.6

Right Turns
Adj Reference Time (s)
Cross Thru Ref Time (s)
Oncoming Left Ref Time (s)
Combined (s)

Intersection Summary			
Intersection Capacity Utilization	69.7%	ICU Level of Service	C

Reference Times and Phasing Options do not represent an optimized timing plan.

Intersection Capacity Utilization
1: E Street & 9th Street

08-14-2024

Movement	EBL	EBT	EBR	WBL	WBT	WBR	NBL	NBT	NBR	SBL	SBT	SBR
Lane Configurations												
Volume (vph)	36	329	22	29	396	53	30	250	38	38	170	28
Pedestrians												
Ped Button												
Pedestrian Timing (s)												
Free Right			No			No			No			No
Ideal Flow	1600	1600	1600	1600	1600	1600	1600	1600	1600	1600	1600	1600
Lost Time (s)	4.0	5.0	4.0	4.0	5.0	4.0	4.0	5.1	4.0	4.0	5.1	4.0
Minimum Green (s)	7.0	6.0	4.0	8.0	6.0	4.0	8.0	10.0	4.0	9.0	10.0	4.0
Refr Cycle Length (s)	120	120	120	120	120	120	120	120	120	120	120	120
Volume Combined (vph)	36	351	0	29	449	0	30	288	0	38	198	0
Lane Utilization Factor	1.00	0.95	1.00	1.00	0.95	1.00	1.00	1.00	1.00	1.00	1.00	1.00
Turning Factor (vph)	0.95	0.99	0.85	0.95	0.98	0.85	0.95	0.98	0.85	0.95	0.98	0.85
Saturated Flow (vph)	1520	3018	0	1520	2992	0	1520	1568	0	1520	1566	0
Ped Intf Time (s)	0.0	0.0	0.0	0.0	0.0	0.0	0.0	0.0	0.0	0.0	0.0	0.0
Pedestrian Frequency (%)		0.00			0.00			0.00			0.00	
Protected Option Allowed		Yes			Yes			Yes			Yes	
Reference Time (s)	2.8	14.0	0.0	2.3	18.0	0.0	2.4	22.0	0.0	3.0	15.2	0.0
Adj Reference Time (s)	11.0	19.0	0.0	12.0	23.0	0.0	12.0	27.1	0.0	13.0	20.3	0.0
Permitted Option												
Adj Saturation A (vph)	101	1509		101	1496		101	1568		101	1566	
Reference Time A (s)	42.6	14.0		34.3	18.0		35.5	22.0		45.0	15.2	
Adj Saturation B (vph	NA	NA		NA	NA		NA	NA		NA	NA	
Reference Time B (s)	NA	NA		NA	NA		NA	NA		NA	NA	
Reference Time (s)		42.6			34.3			35.5			45.0	
Adj Reference Time (s)		47.6			39.3			40.6			50.1	
Split Option												
Ref Time Combined (s)	2.8	14.0		2.3	18.0		2.4	22.0		3.0	15.2	
Ref Time Seperate (s)	2.8	13.1		2.3	15.9		2.4	19.1		3.0	13.0	
Reference Time (s)	14.0	14.0		18.0	18.0		22.0	22.0		15.2	15.2	
Adj Reference Time (s)	19.0	19.0		23.0	23.0		27.1	27.1		20.3	20.3	

Summary	EB WB	NB SB	Combined
Protected Option (s)	34.0	40.1	
Permitted Option (s)	47.6	50.1	
Split Option (s)	42.0	47.4	
Minimum (s)	34.0	40.1	74.1

Right Turns
Adj Reference Time (s)
Cross Thru Ref Time (s)
Oncoming Left Ref Time (s)
Combined (s)

Intersection Summary			
Intersection Capacity Utilization	61.8%	ICU Level of Service	B

Reference Times and Phasing Options do not represent an optimized timing plan.

Movement	EBL	EBT	EBR	WBL	WBT	WBR	NBL	NBT	NBR	SBL	SBT	SBR
Lane Configurations												
Volume (vph)	17	25	11	9	23	14	29	294	14	4	217	8
Pedestrians												
Ped Button												
Pedestrian Timing (s)												
Free Right			No			No			No			No
Ideal Flow	1600	1600	1600	1600	1600	1600	1600	1600	1600	1600	1600	1600
Lost Time (s)	4.6	4.6	4.0	4.6	4.6	4.0	4.0	5.0	4.0	4.0	5.0	4.0
Minimum Green (s)	7.0	7.0	4.0	7.0	7.0	4.0	8.0	10.0	4.0	9.0	10.0	4.0
Refr Cycle Length (s)	120	120	120	120	120	120	120	120	120	120	120	120
Volume Combined (vph)	0	53	0	0	46	0	29	308	0	4	225	0
Lane Utilization Factor	1.00	1.00	1.00	1.00	1.00	1.00	1.00	1.00	1.00	1.00	1.00	1.00
Turning Factor (vph)	0.95	0.95	0.85	0.95	0.95	0.85	0.95	0.99	0.85	0.95	0.99	0.85
Saturated Flow (vph)	0	1525	0	0	1512	0	1520	1589	0	1520	1591	0
Ped Intf Time (s)	0.0	0.0	0.0	0.0	0.0	0.0	0.0	0.0	0.0	0.0	0.0	0.0
Pedestrian Frequency (%)		0.00			0.00			0.00			0.00	
Protected Option Allowed		No			No			Yes			Yes	
Reference Time (s)			0.0			0.0	2.3	23.3	0.0	0.3	17.0	0.0
Adj Reference Time (s)			0.0			0.0	12.0	28.3	0.0	13.0	22.0	0.0
Permitted Option												
Adj Saturation A (vph)	0	924		0	1310		101	1589		101	1591	
Reference Time A (s)	0.0	6.9		0.0	4.2		34.3	23.3		4.7	17.0	
Adj Saturation B (vph	0	0		0	0		NA	NA		NA	NA	
Reference Time B (s)	9.3	12.2		8.7	11.7		NA	NA		NA	NA	
Reference Time (s)		6.9			4.2			34.3			17.0	
Adj Reference Time (s)		11.6			11.6			39.3			22.0	
Split Option												
Ref Time Combined (s)	0.0	4.2		0.0	3.7		2.3	23.3		0.3	17.0	
Ref Time Seperate (s)	1.3	2.0		0.7	1.8		2.3	22.2		0.3	16.4	
Reference Time (s)	4.2	4.2		3.7	3.7		23.3	23.3		17.0	17.0	
Adj Reference Time (s)	11.6	11.6		11.6	11.6		28.3	28.3		22.0	22.0	

Summary	EB WB	NB SB	Combined
Protected Option (s)	NA	41.3	
Permitted Option (s)	11.6	39.3	
Split Option (s)	23.2	50.2	
Minimum (s)	11.6	39.3	50.9

Right Turns
Adj Reference Time (s)
Cross Thru Ref Time (s)
Oncoming Left Ref Time (s)
Combined (s)

Intersection Summary			
Intersection Capacity Utilization	42.5%	ICU Level of Service	A

Reference Times and Phasing Options do not represent an optimized timing plan.

Movement	EBL	EBT	EBR	WBL	WBT	WBR	NBL	NBT	NBR	SBL	SBT	SBR
Lane Configurations												
Volume (vph)	14	49	8	42	153	12	19	280	19	14	239	24
Pedestrians												
Ped Button												
Pedestrian Timing (s)												
Free Right			No			No			No			No
Ideal Flow	1900	1900	1900	1900	1900	1900	1900	1900	1900	1900	1900	1900
Lost Time (s)	5.0	5.0	4.0	5.0	5.0	4.0	4.0	5.0	4.0	4.0	5.0	4.0
Minimum Green (s)	7.0	7.0	4.0	7.0	7.0	4.0	8.0	10.0	4.0	9.0	10.0	4.0
Refr Cycle Length (s)	120	120	120	120	120	120	120	120	120	120	120	120
Volume Combined (vph)	14	57	0	42	165	0	19	299	0	14	263	0
Lane Utilization Factor	1.00	0.95	1.00	1.00	0.95	1.00	1.00	1.00	1.00	1.00	1.00	1.00
Turning Factor (vph)	0.95	0.98	0.85	0.95	0.99	0.85	0.95	0.99	0.85	0.95	0.99	0.85
Saturated Flow (vph)	1805	3541	0	1805	3578	0	1805	1882	0	1805	1874	0
Ped Intf Time (s)	0.0	0.0	0.0	0.0	0.0	0.0	0.0	0.0	0.0	0.0	0.0	0.0
Pedestrian Frequency (%)		0.00			0.00			0.00			0.00	
Protected Option Allowed		Yes			Yes			Yes			Yes	
Reference Time (s)	0.9	1.9	0.0	2.8	5.5	0.0	1.3	19.1	0.0	0.9	16.8	0.0
Adj Reference Time (s)	12.0	12.0	0.0	12.0	12.0	0.0	12.0	24.1	0.0	13.0	21.8	0.0
Permitted Option												
Adj Saturation A (vph)	120	1771		120	1789		120	1882		120	1874	
Reference Time A (s)	14.0	1.9		41.9	5.5		18.9	19.1		14.0	16.8	
Adj Saturation B (vph	NA	NA		0	3578		NA	NA		NA	NA	
Reference Time B (s)	NA	NA		10.8	5.5		NA	NA		NA	NA	
Reference Time (s)		14.0			10.8			19.1			16.8	
Adj Reference Time (s)		19.0			15.8			24.1			21.8	
Split Option												
Ref Time Combined (s)	0.9	1.9		2.8	5.5		1.3	19.1		0.9	16.8	
Ref Time Seperate (s)	0.9	1.7		2.8	5.1		1.3	17.9		0.9	15.3	
Reference Time (s)	1.9	1.9		5.5	5.5		19.1	19.1		16.8	16.8	
Adj Reference Time (s)	12.0	12.0		12.0	12.0		24.1	24.1		21.8	21.8	

Summary	EB WB	NB SB	Combined
Protected Option (s)	24.0	37.1	
Permitted Option (s)	19.0	24.1	
Split Option (s)	24.0	45.9	
Minimum (s)	19.0	24.1	43.0

Right Turns
Adj Reference Time (s)
Cross Thru Ref Time (s)
Oncoming Left Ref Time (s)
Combined (s)

Intersection Summary			
Intersection Capacity Utilization	35.9%	ICU Level of Service	A

Reference Times and Phasing Options do not represent an optimized timing plan.

Movement	EBL	EBT	EBR	WBL	WBT	WBR	NBL	NBT	NBR	SBL	SBT	SBR
Lane Configurations												
Volume (vph)	28	703	36	30	885	33	69	263	46	40	163	53
Pedestrians												
Ped Button												
Pedestrian Timing (s)												
Free Right			No			No			No			No
Ideal Flow	1900	1900	1900	1900	1900	1900	1900	1900	1900	1900	1900	1900
Lost Time (s)	5.0	5.0	4.0	5.0	5.0	4.0	4.0	6.0	4.0	4.0	6.0	4.0
Minimum Green (s)	9.0	9.0	4.0	9.0	9.0	4.0	9.0	9.0	4.0	9.0	9.0	4.0
Refr Cycle Length (s)	120	120	120	120	120	120	120	120	120	120	120	120
Volume Combined (vph)	28	739	0	30	918	0	69	309	0	40	216	0
Lane Utilization Factor	1.00	0.95	1.00	1.00	0.95	1.00	1.00	1.00	1.00	1.00	1.00	1.00
Turning Factor (vph)	0.95	0.99	0.85	0.95	0.99	0.85	0.95	0.98	0.85	0.95	0.96	0.85
Saturated Flow (vph)	1805	3591	0	1805	3598	0	1805	1858	0	1805	1830	0
Ped Intf Time (s)	0.0	0.0	0.0	0.0	0.0	0.0	0.0	0.0	0.0	0.0	0.0	0.0
Pedestrian Frequency (%)		0.00			0.00			0.00			0.00	
Protected Option Allowed		Yes			Yes			Yes			Yes	
Reference Time (s)	1.9	24.7	0.0	2.0	30.6	0.0	4.6	20.0	0.0	2.7	14.2	0.0
Adj Reference Time (s)	14.0	29.7	0.0	14.0	35.6	0.0	13.0	26.0	0.0	13.0	20.2	0.0
Permitted Option												
Adj Saturation A (vph)	120	1796		120	1799		120	1858		120	1830	
Reference Time A (s)	27.9	24.7		29.9	30.6		68.8	20.0		39.9	14.2	
Adj Saturation B (vph	NA	NA		NA	NA		NA	NA		NA	NA	
Reference Time B (s)	NA	NA		NA	NA		NA	NA		NA	NA	
Reference Time (s)		27.9			30.6			68.8			39.9	
Adj Reference Time (s)		32.9			35.6			74.8			45.9	
Split Option												
Ref Time Combined (s)	1.9	24.7		2.0	30.6		4.6	20.0		2.7	14.2	
Ref Time Seperate (s)	1.9	23.5		2.0	29.5		4.6	17.0		2.7	10.7	
Reference Time (s)	24.7	24.7		30.6	30.6		20.0	20.0		14.2	14.2	
Adj Reference Time (s)	29.7	29.7		35.6	35.6		26.0	26.0		20.2	20.2	

Summary	EB WB	NB SB	Combined
Protected Option (s)	49.6	39.0	
Permitted Option (s)	35.6	74.8	
Split Option (s)	65.3	46.1	
Minimum (s)	35.6	39.0	74.6

Right Turns
Adj Reference Time (s)
Cross Thru Ref Time (s)
Oncoming Left Ref Time (s)
Combined (s)

Intersection Summary			
Intersection Capacity Utilization	62.1%	ICU Level of Service	B

Reference Times and Phasing Options do not represent an optimized timing plan.

Movement	EBL	EBT	EBR	WBL	WBT	WBR	NBL	NBT	NBR	SBL	SBT	SBR
Lane Configurations												
Volume (vph)	12	364	30	9	444	18	33	63	14	9	29	20
Pedestrians												
Ped Button												
Pedestrian Timing (s)												
Free Right			No			No			No			No
Ideal Flow	1900	1900	1900	1900	1900	1900	1900	1900	1900	1900	1900	1900
Lost Time (s)	5.0	5.0	4.0	5.0	5.0	4.0	5.0	5.0	4.0	5.0	5.0	4.0
Minimum Green (s)	21.0	21.0	4.0	21.0	21.0	4.0	17.0	17.0	4.0	17.0	17.0	4.0
Refr Cycle Length (s)	120	120	120	120	120	120	120	120	120	120	120	120
Volume Combined (vph)	0	406	0	0	471	0	0	110	0	0	58	0
Lane Utilization Factor	1.00	0.95	1.00	1.00	0.95	1.00	1.00	0.95	1.00	1.00	0.95	1.00
Turning Factor (vph)	0.95	0.99	0.85	0.95	0.99	0.85	0.95	0.97	0.85	0.95	0.94	0.85
Saturated Flow (vph)	0	3572	0	0	3593	0	0	3495	0	0	3404	0
Ped Intf Time (s)	0.0	0.0	0.0	0.0	0.0	0.0	0.0	0.0	0.0	0.0	0.0	0.0
Pedestrian Frequency (%)		0.00			0.00			0.00			0.00	
Protected Option Allowed		No			No			No			No	
Reference Time (s)			0.0			0.0			0.0			0.0
Adj Reference Time (s)			0.0			0.0			0.0			0.0
Permitted Option												
Adj Saturation A (vph)	0	905		0	1128		0	117		0	130	
Reference Time A (s)	0.0	23.7		0.0	23.1		0.0	34.0		0.0	10.1	
Adj Saturation B (vph	NA	NA		NA	NA		0	1759		0	1698	
Reference Time B (s)	NA	NA		NA	NA		10.2	7.7		8.6	6.1	
Reference Time (s)		23.7			23.1			10.2			8.6	
Adj Reference Time (s)		28.7			28.1			22.0			22.0	
Split Option												
Ref Time Combined (s)	0.0	13.6		0.0	15.7		0.0	3.8		0.0	2.0	
Ref Time Seperate (s)	0.8	12.2		0.6	14.8		2.2	2.1		0.6	1.0	
Reference Time (s)	13.6	13.6		15.7	15.7		3.8	3.8		2.0	2.0	
Adj Reference Time (s)	26.0	26.0		26.0	26.0		22.0	22.0		22.0	22.0	

Summary	EB WB	NB SB	Combined
Protected Option (s)	NA	NA	
Permitted Option (s)	28.7	22.0	
Split Option (s)	52.0	44.0	
Minimum (s)	28.7	22.0	50.7

Right Turns
Adj Reference Time (s)
Cross Thru Ref Time (s)
Oncoming Left Ref Time (s)
Combined (s)

Intersection Summary			
Intersection Capacity Utilization	42.3%	ICU Level of Service	A

Reference Times and Phasing Options do not represent an optimized timing plan.

Movement	EBL	EBT	EBR	WBL	WBT	WBR	NBL	NBT	NBR	SBL	SBT	SBR
Lane Configurations												
Volume (vph)	3	12	7	28	25	26	13	84	5	11	42	11
Pedestrians												
Ped Button												
Pedestrian Timing (s)												
Free Right			No			No			No			No
Ideal Flow	1900	1900	1900	1900	1900	1900	1900	1900	1900	1900	1900	1900
Lost Time (s)	4.0	4.0	4.0	4.0	4.0	4.0	4.0	4.0	4.0	4.0	4.0	4.0
Minimum Green (s)	4.0	4.0	4.0	4.0	4.0	4.0	4.0	4.0	4.0	4.0	4.0	4.0
Refr Cycle Length (s)	120	120	120	120	120	120	120	120	120	120	120	120
Volume Combined (vph)	0	22	0	0	79	0	0	97	5	0	53	11
Lane Utilization Factor	1.00	1.00	1.00	1.00	1.00	1.00	1.00	1.00	1.00	1.00	1.00	1.00
Turning Factor (vph)	0.95	0.95	0.85	0.95	0.93	0.85	0.95	0.99	0.85	0.95	0.99	0.85
Saturated Flow (vph)	0	1797	0	0	1774	0	0	1887	1615	0	1880	1615
Ped Intf Time (s)	0.0	0.0	0.0	0.0	0.0	0.0	0.0	0.0	0.0	0.0	0.0	0.0
Pedestrian Frequency (%)		0.00			0.00			0.00			0.00	
Protected Option Allowed		No			No			No			No	
Reference Time (s)			0.0			0.0			0.4			0.8
Adj Reference Time (s)			0.0			0.0			8.0			8.0
Permitted Option												
Adj Saturation A (vph)	0	1674		0	844		0	629		0	452	
Reference Time A (s)	0.0	1.6		0.0	11.2		0.0	18.5		0.0	14.1	
Adj Saturation B (vph	0	0		0	0		0	0		0	0	
Reference Time B (s)	8.2	9.5		9.9	13.3		8.9	14.2		8.7	11.4	
Reference Time (s)		1.6			11.2			14.2			11.4	
Adj Reference Time (s)		8.0			15.2			18.2			15.4	
Split Option												
Ref Time Combined (s)	0.0	1.5		0.0	5.3		0.0	6.2		0.0	3.4	
Ref Time Seperate (s)	0.2	0.8		1.9	1.7		0.9	5.3		0.7	2.7	
Reference Time (s)	1.5	1.5		5.3	5.3		6.2	6.2		3.4	3.4	
Adj Reference Time (s)	8.0	8.0		9.3	9.3		10.2	10.2		8.0	8.0	

Summary	EB WB	NB SB	Combined
Protected Option (s)	NA	NA	
Permitted Option (s)	15.2	18.2	
Split Option (s)	17.3	18.2	
Minimum (s)	15.2	18.2	33.4

Right Turns	NBR	SBR
Adj Reference Time (s)	8.0	8.0
Cross Thru Ref Time (s)	8.0	9.3
Oncoming Left Ref Time (s)	8.0	10.2
Combined (s)	24.0	27.5

Intersection Summary			
Intersection Capacity Utilization	27.8%	ICU Level of Service	A

Reference Times and Phasing Options do not represent an optimized timing plan.

Movement	EBL	EBT	EBR	WBL	WBT	WBR	NBL	NBT	NBR	SBL	SBT	SBR
Lane Configurations												
Volume (vph)	13	46	13	12	170	14	30	59	14	13	66	30
Pedestrians												
Ped Button												
Pedestrian Timing (s)												
Free Right			No			No			No			No
Ideal Flow	1900	1900	1900	1900	1900	1900	1900	1900	1900	1900	1900	1900
Lost Time (s)	4.5	4.5	4.5	4.5	4.5	4.5	4.5	4.5	4.0	4.5	4.5	4.0
Minimum Green (s)	22.0	22.0	22.0	22.0	22.0	22.0	19.0	19.0	4.0	19.0	19.0	4.0
Refr Cycle Length (s)	120	120	120	120	120	120	120	120	120	120	120	120
Volume Combined (vph)	13	46	13	12	170	14	0	103	0	0	109	0
Lane Utilization Factor	1.00	1.00	1.00	1.00	1.00	1.00	1.00	0.95	1.00	1.00	0.95	1.00
Turning Factor (vph)	0.95	1.00	0.85	0.95	1.00	0.85	0.95	0.97	0.85	0.95	0.95	0.85
Saturated Flow (vph)	1805	1900	1615	1805	1900	1615	0	3492	0	0	3448	0
Ped Intf Time (s)	0.0	0.0	0.0	0.0	0.0	0.0	0.0	0.0	0.0	0.0	0.0	0.0
Pedestrian Frequency (%)		0.00			0.00			0.00			0.00	
Protected Option Allowed		Yes			Yes			No			No	
Reference Time (s)	0.9	2.9	1.0	0.8	10.7	1.0			0.0			0.0
Adj Reference Time (s)	26.5	26.5	26.5	26.5	26.5	26.5			0.0			0.0
Permitted Option												
Adj Saturation A (vph)	120	1900		120	1900		0	116		0	213	
Reference Time A (s)	13.0	2.9		12.0	10.7		0.0	30.9		0.0	16.0	
Adj Saturation B (vph	NA	NA		0	1900		0	1757		0	1724	
Reference Time B (s)	NA	NA		8.8	10.7		10.0	7.5		8.9	7.8	
Reference Time (s)		13.0			10.7			10.0			8.9	
Adj Reference Time (s)		26.5			26.5			23.5			23.5	
Split Option												
Ref Time Combined (s)	0.9	2.9		0.8	10.7		0.0	3.5		0.0	3.8	
Ref Time Seperate (s)	0.9	2.9		0.8	10.7		2.0	2.0		0.9	2.3	
Reference Time (s)	2.9	2.9		10.7	10.7		3.5	3.5		3.8	3.8	
Adj Reference Time (s)	26.5	26.5		26.5	26.5		23.5	23.5		23.5	23.5	

Summary	EB WB	NB SB	Combined
Protected Option (s)	53.0	NA	
Permitted Option (s)	26.5	23.5	
Split Option (s)	53.0	47.0	
Minimum (s)	26.5	23.5	50.0

Right Turns	EBR	WBR
Adj Reference Time (s)	26.5	26.5
Cross Thru Ref Time (s)	23.5	23.5
Oncoming Left Ref Time (s)	26.5	26.5
Combined (s)	76.5	76.5

Intersection Summary			
Intersection Capacity Utilization	63.7%	ICU Level of Service	B

Reference Times and Phasing Options do not represent an optimized timing plan.

Movement	EBL	EBT	EBR	WBL	WBT	WBR	NBL	NBT	NBR	SBL	SBT	SBR
Lane Configurations												
Volume (vph)	59	701	34	9	964	16	23	30	13	18	38	83
Pedestrians												
Ped Button												
Pedestrian Timing (s)												
Free Right			No			No			No			No
Ideal Flow	1900	1900	1900	1900	1900	1900	1900	1900	1900	1900	1900	1900
Lost Time (s)	5.0	5.0	4.0	5.0	5.0	4.0	5.0	5.0	4.0	5.0	5.0	4.0
Minimum Green (s)	24.0	24.0	4.0	24.0	24.0	4.0	7.0	7.0	4.0	7.0	7.0	4.0
Refr Cycle Length (s)	120	120	120	120	120	120	120	120	120	120	120	120
Volume Combined (vph)	59	735	0	9	980	0	0	66	0	0	139	0
Lane Utilization Factor	1.00	0.95	1.00	1.00	0.95	1.00	1.00	0.95	1.00	1.00	0.95	1.00
Turning Factor (vph)	0.95	0.99	0.85	0.95	1.00	0.85	0.95	0.95	0.85	0.95	0.90	0.85
Saturated Flow (vph)	1805	3592	0	1805	3609	0	0	3450	0	0	3272	0
Ped Intf Time (s)	0.0	0.0	0.0	0.0	0.0	0.0	0.0	0.0	0.0	0.0	0.0	0.0
Pedestrian Frequency (%)		0.00			0.00			0.00			0.00	
Protected Option Allowed		Yes			Yes			No			No	
Reference Time (s)	3.9	24.6	0.0	0.6	32.6	0.0			0.0			0.0
Adj Reference Time (s)	29.0	29.6	0.0	29.0	37.6	0.0			0.0			0.0
Permitted Option												
Adj Saturation A (vph)	120	1796		120	1804		0	115		0	176	
Reference Time A (s)	58.8	24.6		9.0	32.6		0.0	24.0		0.0	22.9	
Adj Saturation B (vph	NA	NA		NA	NA		NA	NA		0	1623	
Reference Time B (s)	NA	NA		NA	NA		NA	NA		9.2	9.1	
Reference Time (s)		58.8			32.6			24.0			9.2	
Adj Reference Time (s)		63.8			37.6			29.0			14.2	
Split Option												
Ref Time Combined (s)	3.9	24.6		0.6	32.6		0.0	2.3		0.0	5.1	
Ref Time Seperate (s)	3.9	23.4		0.6	32.1		1.5	1.0		1.2	1.4	
Reference Time (s)	24.6	24.6		32.6	32.6		2.3	2.3		5.1	5.1	
Adj Reference Time (s)	29.6	29.6		37.6	37.6		12.0	12.0		12.0	12.0	

Summary	EB WB	NB SB	Combined
Protected Option (s)	66.6	NA	
Permitted Option (s)	63.8	29.0	
Split Option (s)	67.1	24.0	
Minimum (s)	63.8	24.0	87.8

Right Turns
Adj Reference Time (s)
Cross Thru Ref Time (s)
Oncoming Left Ref Time (s)
Combined (s)

Intersection Summary			
Intersection Capacity Utilization	73.2%	ICU Level of Service	D

Reference Times and Phasing Options do not represent an optimized timing plan.

Intersection Capacity Utilization
1: E Street & 9th Street

08-14-2024

Movement	EBL	EBT	EBR	WBL	WBT	WBR	NBL	NBT	NBR	SBL	SBT	SBR
Lane Configurations												
Volume (vph)	12	353	26	39	325	55	12	102	16	43	162	20
Pedestrians												
Ped Button												
Pedestrian Timing (s)												
Free Right			No			No			No			No
Ideal Flow	1600	1600	1600	1600	1600	1600	1600	1600	1600	1600	1600	1600
Lost Time (s)	4.0	5.0	4.0	4.0	5.0	4.0	4.0	5.1	4.0	4.0	5.1	4.0
Minimum Green (s)	7.0	6.0	4.0	8.0	6.0	4.0	8.0	10.0	4.0	9.0	10.0	4.0
Refr Cycle Length (s)	120	120	120	120	120	120	120	120	120	120	120	120
Volume Combined (vph)	12	379	0	39	380	0	12	118	0	43	182	0
Lane Utilization Factor	1.00	0.95	1.00	1.00	0.95	1.00	1.00	1.00	1.00	1.00	1.00	1.00
Turning Factor (vph)	0.95	0.99	0.85	0.95	0.98	0.85	0.95	0.98	0.85	0.95	0.98	0.85
Saturated Flow (vph)	1520	3015	0	1520	2980	0	1520	1567	0	1520	1574	0
Ped Intf Time (s)	0.0	0.0	0.0	0.0	0.0	0.0	0.0	0.0	0.0	0.0	0.0	0.0
Pedestrian Frequency (%)		0.00			0.00			0.00			0.00	
Protected Option Allowed		Yes			Yes			Yes			Yes	
Reference Time (s)	0.9	15.1	0.0	3.1	15.3	0.0	0.9	9.0	0.0	3.4	13.9	0.0
Adj Reference Time (s)	11.0	20.1	0.0	12.0	20.3	0.0	12.0	15.1	0.0	13.0	19.0	0.0
Permitted Option												
Adj Saturation A (vph)	101	1508		101	1490		101	1567		101	1574	
Reference Time A (s)	14.2	15.1		46.2	15.3		14.2	9.0		50.9	13.9	
Adj Saturation B (vph	NA	NA		NA	NA		NA	NA		0	1574	
Reference Time B (s)	NA	NA		NA	NA		NA	NA		11.4	13.9	
Reference Time (s)		15.1			46.2			14.2			13.9	
Adj Reference Time (s)		20.1			51.2			19.3			19.0	
Split Option												
Ref Time Combined (s)	0.9	15.1		3.1	15.3		0.9	9.0		3.4	13.9	
Ref Time Seperate (s)	0.9	14.0		3.1	13.1		0.9	7.8		3.4	12.4	
Reference Time (s)	15.1	15.1		15.3	15.3		9.0	9.0		13.9	13.9	
Adj Reference Time (s)	20.1	20.1		20.3	20.3		15.1	15.1		19.0	19.0	

Summary	EB WB	NB SB	Combined
Protected Option (s)	32.1	31.0	
Permitted Option (s)	51.2	19.3	
Split Option (s)	40.4	34.1	
Minimum (s)	32.1	19.3	51.4

Right Turns
Adj Reference Time (s)
Cross Thru Ref Time (s)
Oncoming Left Ref Time (s)
Combined (s)

Intersection Summary			
Intersection Capacity Utilization	42.8%	ICU Level of Service	A

Reference Times and Phasing Options do not represent an optimized timing plan.

Movement	EBL	EBT	EBR	WBL	WBT	WBR	NBL	NBT	NBR	SBL	SBT	SBR
Lane Configurations												
Volume (vph)	3	16	5	3	23	5	14	144	20	4	195	13
Pedestrians												
Ped Button												
Pedestrian Timing (s)												
Free Right			No			No			No			No
Ideal Flow	1600	1600	1600	1600	1600	1600	1600	1600	1600	1600	1600	1600
Lost Time (s)	4.6	4.6	4.0	4.6	4.6	4.0	4.0	5.0	4.0	4.0	5.0	4.0
Minimum Green (s)	7.0	7.0	4.0	7.0	7.0	4.0	8.0	10.0	4.0	9.0	10.0	4.0
Refr Cycle Length (s)	120	120	120	120	120	120	120	120	120	120	120	120
Volume Combined (vph)	0	24	0	0	31	0	14	164	0	4	208	0
Lane Utilization Factor	1.00	1.00	1.00	1.00	1.00	1.00	1.00	1.00	1.00	1.00	1.00	1.00
Turning Factor (vph)	0.95	0.96	0.85	0.95	0.97	0.85	0.95	0.98	0.85	0.95	0.99	0.85
Saturated Flow (vph)	0	1540	0	0	1554	0	1520	1571	0	1520	1585	0
Ped Intf Time (s)	0.0	0.0	0.0	0.0	0.0	0.0	0.0	0.0	0.0	0.0	0.0	0.0
Pedestrian Frequency (%)		0.00			0.00			0.00			0.00	
Protected Option Allowed		No			No			Yes			Yes	
Reference Time (s)			0.0			0.0	1.1	12.5	0.0	0.3	15.7	0.0
Adj Reference Time (s)			0.0			0.0	12.0	17.5	0.0	13.0	20.7	0.0
Permitted Option												
Adj Saturation A (vph)	0	1078		0	1246		101	1571		101	1585	
Reference Time A (s)	0.0	2.7		0.0	3.0		16.6	12.5		4.7	15.7	
Adj Saturation B (vph	0	0		0	0		NA	NA		NA	NA	
Reference Time B (s)	8.2	9.9		8.2	10.4		NA	NA		NA	NA	
Reference Time (s)		2.7			3.0			16.6			15.7	
Adj Reference Time (s)		11.6			11.6			21.6			20.7	
Split Option												
Ref Time Combined (s)	0.0	1.9		0.0	2.4		1.1	12.5		0.3	15.7	
Ref Time Seperate (s)	0.2	1.2		0.2	1.8		1.1	11.0		0.3	14.8	
Reference Time (s)	1.9	1.9		2.4	2.4		12.5	12.5		15.7	15.7	
Adj Reference Time (s)	11.6	11.6		11.6	11.6		17.5	17.5		20.7	20.7	

Summary	EB WB	NB SB	Combined
Protected Option (s)	NA	32.7	
Permitted Option (s)	11.6	21.6	
Split Option (s)	23.2	38.3	
Minimum (s)	11.6	21.6	33.2

Right Turns
Adj Reference Time (s)
Cross Thru Ref Time (s)
Oncoming Left Ref Time (s)
Combined (s)

Intersection Summary			
Intersection Capacity Utilization	27.6%	ICU Level of Service	A

Reference Times and Phasing Options do not represent an optimized timing plan.

Movement	EBL	EBT	EBR	WBL	WBT	WBR	NBL	NBT	NBR	SBL	SBT	SBR
Lane Configurations												
Volume (vph)	31	98	27	12	45	10	15	159	46	13	185	11
Pedestrians												
Ped Button												
Pedestrian Timing (s)												
Free Right			No			No			No			No
Ideal Flow	1900	1900	1900	1900	1900	1900	1900	1900	1900	1900	1900	1900
Lost Time (s)	5.0	5.0	4.0	5.0	5.0	4.0	4.0	5.0	4.0	4.0	5.0	4.0
Minimum Green (s)	7.0	7.0	4.0	7.0	7.0	4.0	8.0	10.0	4.0	9.0	10.0	4.0
Refr Cycle Length (s)	120	120	120	120	120	120	120	120	120	120	120	120
Volume Combined (vph)	31	125	0	12	55	0	15	205	0	13	196	0
Lane Utilization Factor	1.00	0.95	1.00	1.00	0.95	1.00	1.00	1.00	1.00	1.00	1.00	1.00
Turning Factor (vph)	0.95	0.97	0.85	0.95	0.97	0.85	0.95	0.97	0.85	0.95	0.99	0.85
Saturated Flow (vph)	1805	3500	0	1805	3519	0	1805	1836	0	1805	1884	0
Ped Intf Time (s)	0.0	0.0	0.0	0.0	0.0	0.0	0.0	0.0	0.0	0.0	0.0	0.0
Pedestrian Frequency (%)		0.00			0.00			0.00			0.00	
Protected Option Allowed		Yes			Yes			Yes			Yes	
Reference Time (s)	2.1	4.3	0.0	0.8	1.9	0.0	1.0	13.4	0.0	0.9	12.5	0.0
Adj Reference Time (s)	12.0	12.0	0.0	12.0	12.0	0.0	12.0	18.4	0.0	13.0	17.5	0.0
Permitted Option												
Adj Saturation A (vph)	120	1750		120	1759		120	1836		120	1884	
Reference Time A (s)	30.9	4.3		12.0	1.9		15.0	13.4		13.0	12.5	
Adj Saturation B (vph	0	3500		NA	NA		NA	NA		NA	NA	
Reference Time B (s)	10.1	4.3		NA	NA		NA	NA		NA	NA	
Reference Time (s)		10.1			12.0			15.0			13.0	
Adj Reference Time (s)		15.1			17.0			20.0			18.0	
Split Option												
Ref Time Combined (s)	2.1	4.3		0.8	1.9		1.0	13.4		0.9	12.5	
Ref Time Seperate (s)	2.1	3.4		0.8	1.5		1.0	10.4		0.9	11.8	
Reference Time (s)	4.3	4.3		1.9	1.9		13.4	13.4		12.5	12.5	
Adj Reference Time (s)	12.0	12.0		12.0	12.0		18.4	18.4		17.5	17.5	

Summary	EB WB	NB SB	Combined
Protected Option (s)	24.0	31.4	
Permitted Option (s)	17.0	20.0	
Split Option (s)	24.0	35.9	
Minimum (s)	17.0	20.0	36.9

Right Turns
Adj Reference Time (s)
Cross Thru Ref Time (s)
Oncoming Left Ref Time (s)
Combined (s)

Intersection Summary			
Intersection Capacity Utilization	30.8%	ICU Level of Service	A

Reference Times and Phasing Options do not represent an optimized timing plan.

Movement	EBL	EBT	EBR	WBL	WBT	WBR	NBL	NBT	NBR	SBL	SBT	SBR
Lane Configurations												
Volume (vph)	105	1172	39	13	545	16	22	98	28	27	150	30
Pedestrians												
Ped Button												
Pedestrian Timing (s)												
Free Right			No			No			No			No
Ideal Flow	1900	1900	1900	1900	1900	1900	1900	1900	1900	1900	1900	1900
Lost Time (s)	5.0	5.0	4.0	5.0	5.0	4.0	4.0	6.0	4.0	4.0	6.0	4.0
Minimum Green (s)	9.0	9.0	4.0	9.0	9.0	4.0	9.0	9.0	4.0	9.0	9.0	4.0
Refr Cycle Length (s)	120	120	120	120	120	120	120	120	120	120	120	120
Volume Combined (vph)	105	1211	0	13	561	0	22	126	0	27	180	0
Lane Utilization Factor	1.00	0.95	1.00	1.00	0.95	1.00	1.00	1.00	1.00	1.00	1.00	1.00
Turning Factor (vph)	0.95	1.00	0.85	0.95	1.00	0.85	0.95	0.97	0.85	0.95	0.97	0.85
Saturated Flow (vph)	1805	3600	0	1805	3602	0	1805	1837	0	1805	1853	0
Ped Intf Time (s)	0.0	0.0	0.0	0.0	0.0	0.0	0.0	0.0	0.0	0.0	0.0	0.0
Pedestrian Frequency (%)		0.00			0.00			0.00			0.00	
Protected Option Allowed		Yes			Yes			Yes			Yes	
Reference Time (s)	7.0	40.4	0.0	0.9	18.7	0.0	1.5	8.2	0.0	1.8	11.7	0.0
Adj Reference Time (s)	14.0	45.4	0.0	14.0	23.7	0.0	13.0	15.0	0.0	13.0	17.7	0.0
Permitted Option												
Adj Saturation A (vph)	120	1800		120	1801		120	1837		120	1853	
Reference Time A (s)	104.7	40.4		13.0	18.7		21.9	8.2		26.9	11.7	
Adj Saturation B (vph	NA	NA		NA	NA		NA	NA		NA	NA	
Reference Time B (s)	NA	NA		NA	NA		NA	NA		NA	NA	
Reference Time (s)		104.7			18.7			21.9			26.9	
Adj Reference Time (s)		109.7			23.7			27.9			32.9	
Split Option												
Ref Time Combined (s)	7.0	40.4		0.9	18.7		1.5	8.2		1.8	11.7	
Ref Time Seperate (s)	7.0	39.1		0.9	18.2		1.5	6.4		1.8	9.7	
Reference Time (s)	40.4	40.4		18.7	18.7		8.2	8.2		11.7	11.7	
Adj Reference Time (s)	45.4	45.4		23.7	23.7		15.0	15.0		17.7	17.7	

Summary	EB WB	NB SB	Combined
Protected Option (s)	59.4	30.7	
Permitted Option (s)	109.7	32.9	
Split Option (s)	69.1	32.7	
Minimum (s)	59.4	30.7	90.0

Right Turns
Adj Reference Time (s)
Cross Thru Ref Time (s)
Oncoming Left Ref Time (s)
Combined (s)

Intersection Summary			
Intersection Capacity Utilization	75.0%	ICU Level of Service	D

Reference Times and Phasing Options do not represent an optimized timing plan.

Movement	EBL	EBT	EBR	WBL	WBT	WBR	NBL	NBT	NBR	SBL	SBT	SBR
Lane Configurations												
Volume (vph)	8	371	72	26	307	17	9	27	11	11	77	13
Pedestrians												
Ped Button												
Pedestrian Timing (s)												
Free Right			No			No			No			No
Ideal Flow	1900	1900	1900	1900	1900	1900	1900	1900	1900	1900	1900	1900
Lost Time (s)	5.0	5.0	4.0	5.0	5.0	4.0	5.0	5.0	4.0	5.0	5.0	4.0
Minimum Green (s)	21.0	21.0	4.0	21.0	21.0	4.0	17.0	17.0	4.0	17.0	17.0	4.0
Refr Cycle Length (s)	120	120	120	120	120	120	120	120	120	120	120	120
Volume Combined (vph)	0	451	0	0	350	0	0	47	0	0	101	0
Lane Utilization Factor	1.00	0.95	1.00	1.00	0.95	1.00	1.00	0.95	1.00	1.00	0.95	1.00
Turning Factor (vph)	0.95	0.98	0.85	0.95	0.99	0.85	0.95	0.96	0.85	0.95	0.98	0.85
Saturated Flow (vph)	0	3528	0	0	3578	0	0	3457	0	0	3528	0
Ped Intf Time (s)	0.0	0.0	0.0	0.0	0.0	0.0	0.0	0.0	0.0	0.0	0.0	0.0
Pedestrian Frequency (%)		0.00			0.00			0.00			0.00	
Protected Option Allowed		No			No			No			No	
Reference Time (s)			0.0			0.0			0.0			0.0
Adj Reference Time (s)			0.0			0.0			0.0			0.0
Permitted Option												
Adj Saturation A (vph)	0	1140		0	424		0	115		0	252	
Reference Time A (s)	0.0	22.0		0.0	34.8		0.0	9.4		0.0	13.6	
Adj Saturation B (vph	NA	NA		NA	NA		0	1730		0	1770	
Reference Time B (s)	NA	NA		NA	NA		8.6	5.6		8.7	7.4	
Reference Time (s)		22.0			34.8			8.6			8.7	
Adj Reference Time (s)		27.0			39.8			22.0			22.0	
Split Option												
Ref Time Combined (s)	0.0	15.3		0.0	11.7		0.0	1.6		0.0	3.4	
Ref Time Seperate (s)	0.5	12.6		1.7	10.3		0.6	0.9		0.7	2.6	
Reference Time (s)	15.3	15.3		11.7	11.7		1.6	1.6		3.4	3.4	
Adj Reference Time (s)	26.0	26.0		26.0	26.0		22.0	22.0		22.0	22.0	

Summary	EB WB	NB SB	Combined
Protected Option (s)	NA	NA	
Permitted Option (s)	39.8	22.0	
Split Option (s)	52.0	44.0	
Minimum (s)	39.8	22.0	61.8

Right Turns
Adj Reference Time (s)
Cross Thru Ref Time (s)
Oncoming Left Ref Time (s)
Combined (s)

Intersection Summary			
Intersection Capacity Utilization	51.5%	ICU Level of Service	A

Reference Times and Phasing Options do not represent an optimized timing plan.

Movement	EBL	EBT	EBR	WBL	WBT	WBR	NBL	NBT	NBR	SBL	SBT	SBR
Lane Configurations												
Volume (vph)	4	10	25	31	10	6	11	57	10	5	159	3
Pedestrians												
Ped Button												
Pedestrian Timing (s)												
Free Right			No			No			No			No
Ideal Flow	1900	1900	1900	1900	1900	1900	1900	1900	1900	1900	1900	1900
Lost Time (s)	4.0	4.0	4.0	4.0	4.0	4.0	4.0	4.0	4.0	4.0	4.0	4.0
Minimum Green (s)	4.0	4.0	4.0	4.0	4.0	4.0	4.0	4.0	4.0	4.0	4.0	4.0
Refr Cycle Length (s)	120	120	120	120	120	120	120	120	120	120	120	120
Volume Combined (vph)	0	39	0	0	47	0	0	68	10	0	164	3
Lane Utilization Factor	1.00	1.00	1.00	1.00	1.00	1.00	1.00	1.00	1.00	1.00	1.00	1.00
Turning Factor (vph)	0.95	0.90	0.85	0.95	0.95	0.85	0.95	0.99	0.85	0.95	1.00	0.85
Saturated Flow (vph)	0	1709	0	0	1802	0	0	1885	1615	0	1897	1615
Ped Intf Time (s)	0.0	0.0	0.0	0.0	0.0	0.0	0.0	0.0	0.0	0.0	0.0	0.0
Pedestrian Frequency (%)		0.00			0.00			0.00			0.00	
Protected Option Allowed		No			No			No			No	
Reference Time (s)			0.0			0.0			0.7			0.2
Adj Reference Time (s)			0.0			0.0			8.0			8.0
Permitted Option												
Adj Saturation A (vph)	0	1739		0	441		0	549		0	1322	
Reference Time A (s)	0.0	2.7		0.0	12.8		0.0	14.9		0.0	14.9	
Adj Saturation B (vph	0	0		0	0		NA	NA		0	0	
Reference Time B (s)	8.3	10.7		10.1	11.1		NA	NA		8.3	18.4	
Reference Time (s)		2.7			11.1			14.9			14.9	
Adj Reference Time (s)		8.0			15.1			18.9			18.9	
Split Option												
Ref Time Combined (s)	0.0	2.7		0.0	3.1		0.0	4.3		0.0	10.4	
Ref Time Seperate (s)	0.3	0.7		2.1	0.7		0.7	3.6		0.3	10.0	
Reference Time (s)	2.7	2.7		3.1	3.1		4.3	4.3		10.4	10.4	
Adj Reference Time (s)	8.0	8.0		8.0	8.0		8.3	8.3		14.4	14.4	

Summary	EB WB	NB SB	Combined
Protected Option (s)	NA	NA	
Permitted Option (s)	15.1	18.9	
Split Option (s)	16.0	22.7	
Minimum (s)	15.1	18.9	34.0

Right Turns	NBR	SBR
Adj Reference Time (s)	8.0	8.0
Cross Thru Ref Time (s)	8.0	8.0
Oncoming Left Ref Time (s)	14.4	8.3
Combined (s)	30.4	24.3

Intersection Summary			
Intersection Capacity Utilization	28.3%	ICU Level of Service	A

Reference Times and Phasing Options do not represent an optimized timing plan.

Movement	EBL	EBT	EBR	WBL	WBT	WBR	NBL	NBT	NBR	SBL	SBT	SBR
Lane Configurations												
Volume (vph)	23	87	20	12	47	13	16	57	41	32	58	56
Pedestrians												
Ped Button												
Pedestrian Timing (s)												
Free Right			No			No			No			No
Ideal Flow	1900	1900	1900	1900	1900	1900	1900	1900	1900	1900	1900	1900
Lost Time (s)	4.5	4.5	4.5	4.5	4.5	4.5	4.5	4.5	4.0	4.5	4.5	4.0
Minimum Green (s)	22.0	22.0	22.0	22.0	22.0	22.0	19.0	19.0	4.0	19.0	19.0	4.0
Refr Cycle Length (s)	120	120	120	120	120	120	120	120	120	120	120	120
Volume Combined (vph)	23	87	20	12	47	13	0	114	0	0	146	0
Lane Utilization Factor	1.00	1.00	1.00	1.00	1.00	1.00	1.00	0.95	1.00	1.00	0.95	1.00
Turning Factor (vph)	0.95	1.00	0.85	0.95	1.00	0.85	0.95	0.94	0.85	0.95	0.93	0.85
Saturated Flow (vph)	1805	1900	1615	1805	1900	1615	0	3398	0	0	3372	0
Ped Intf Time (s)	0.0	0.0	0.0	0.0	0.0	0.0	0.0	0.0	0.0	0.0	0.0	0.0
Pedestrian Frequency (%)		0.00			0.00			0.00			0.00	
Protected Option Allowed		Yes			Yes			No			No	
Reference Time (s)	1.5	5.5	1.5	0.8	3.0	1.0			0.0			0.0
Adj Reference Time (s)	26.5	26.5	26.5	26.5	26.5	26.5			0.0			0.0
Permitted Option												
Adj Saturation A (vph)	120	1900		120	1900		0	158		0	112	
Reference Time A (s)	22.9	5.5		12.0	3.0		0.0	19.0		0.0	34.2	
Adj Saturation B (vph	0	1900		0	1900		0	1695		0	1676	
Reference Time B (s)	9.5	5.5		8.8	3.0		9.1	8.0		10.1	9.2	
Reference Time (s)		9.5			8.8			9.1			10.1	
Adj Reference Time (s)		26.5			26.5			23.5			23.5	
Split Option												
Ref Time Combined (s)	1.5	5.5		0.8	3.0		0.0	4.0		0.0	5.2	
Ref Time Seperate (s)	1.5	5.5		0.8	3.0		1.1	2.0		2.1	2.1	
Reference Time (s)	5.5	5.5		3.0	3.0		4.0	4.0		5.2	5.2	
Adj Reference Time (s)	26.5	26.5		26.5	26.5		23.5	23.5		23.5	23.5	

Summary	EB WB	NB SB	Combined
Protected Option (s)	53.0	NA	
Permitted Option (s)	26.5	23.5	
Split Option (s)	53.0	47.0	
Minimum (s)	26.5	23.5	50.0

Right Turns	EBR	WBR
Adj Reference Time (s)	26.5	26.5
Cross Thru Ref Time (s)	23.5	23.5
Oncoming Left Ref Time (s)	26.5	26.5
Combined (s)	76.5	76.5

Intersection Summary			
Intersection Capacity Utilization	63.7%	ICU Level of Service	B

Reference Times and Phasing Options do not represent an optimized timing plan.

Movement	EBL	EBT	EBR	WBL	WBT	WBR	NBL	NBT	NBR	SBL	SBT	SBR
Lane Configurations												
Volume (vph)	69	1326	7	7	573	22	5	19	6	13	25	20
Pedestrians												
Ped Button												
Pedestrian Timing (s)												
Free Right			No			No			No			No
Ideal Flow	1900	1900	1900	1900	1900	1900	1900	1900	1900	1900	1900	1900
Lost Time (s)	5.0	5.0	4.0	5.0	5.0	4.0	5.0	5.0	4.0	5.0	5.0	4.0
Minimum Green (s)	24.0	24.0	4.0	24.0	24.0	4.0	7.0	7.0	4.0	7.0	7.0	4.0
Refr Cycle Length (s)	120	120	120	120	120	120	120	120	120	120	120	120
Volume Combined (vph)	69	1333	0	7	595	0	0	30	0	0	58	0
Lane Utilization Factor	1.00	0.95	1.00	1.00	0.95	1.00	1.00	0.95	1.00	1.00	0.95	1.00
Turning Factor (vph)	0.95	1.00	0.85	0.95	0.99	0.85	0.95	0.96	0.85	0.95	0.94	0.85
Saturated Flow (vph)	1805	3615	0	1805	3598	0	0	3480	0	0	3392	0
Ped Intf Time (s)	0.0	0.0	0.0	0.0	0.0	0.0	0.0	0.0	0.0	0.0	0.0	0.0
Pedestrian Frequency (%)		0.00			0.00			0.00			0.00	
Protected Option Allowed		Yes			Yes			No			No	
Reference Time (s)	4.6	44.3	0.0	0.5	19.8	0.0			0.0			0.0
Adj Reference Time (s)	29.0	49.3	0.0	29.0	29.0	0.0			0.0			0.0
Permitted Option												
Adj Saturation A (vph)	120	1807		120	1799		0	116		0	113	
Reference Time A (s)	68.8	44.3		7.0	19.8		0.0	5.2		0.0	13.8	
Adj Saturation B (vph	NA	NA		NA	NA		0	1744		0	1688	
Reference Time B (s)	NA	NA		NA	NA		8.3	5.0		8.9	6.1	
Reference Time (s)		68.8			19.8			5.2			8.9	
Adj Reference Time (s)		73.8			29.0			12.0			13.9	
Split Option												
Ref Time Combined (s)	4.6	44.3		0.5	19.8		0.0	1.0		0.0	2.1	
Ref Time Seperate (s)	4.6	44.0		0.5	19.1		0.3	0.7		0.9	0.9	
Reference Time (s)	44.3	44.3		19.8	19.8		1.0	1.0		2.1	2.1	
Adj Reference Time (s)	49.3	49.3		29.0	29.0		12.0	12.0		12.0	12.0	

Summary	EB WB	NB SB	Combined
Protected Option (s)	78.3	NA	
Permitted Option (s)	73.8	13.9	
Split Option (s)	78.3	24.0	
Minimum (s)	73.8	13.9	87.7

Right Turns
Adj Reference Time (s)
Cross Thru Ref Time (s)
Oncoming Left Ref Time (s)
Combined (s)

Intersection Summary			
Intersection Capacity Utilization	73.1%	ICU Level of Service	D

Reference Times and Phasing Options do not represent an optimized timing plan.

Intersection Capacity Utilization
1: E Street & 9th Street

08-14-2024

Movement	EBL	EBT	EBR	WBL	WBT	WBR	NBL	NBT	NBR	SBL	SBT	SBR
Lane Configurations												
Volume (vph)	39	350	24	31	421	57	32	265	41	41	181	30
Pedestrians												
Ped Button												
Pedestrian Timing (s)												
Free Right			No			No			No			No
Ideal Flow	1600	1600	1600	1600	1600	1600	1600	1600	1600	1600	1600	1600
Lost Time (s)	4.0	5.0	4.0	4.0	5.0	4.0	4.0	5.1	4.0	4.0	5.1	4.0
Minimum Green (s)	7.0	6.0	4.0	8.0	6.0	4.0	8.0	10.0	4.0	9.0	10.0	4.0
Refr Cycle Length (s)	120	120	120	120	120	120	120	120	120	120	120	120
Volume Combined (vph)	39	374	0	31	478	0	32	306	0	41	211	0
Lane Utilization Factor	1.00	0.95	1.00	1.00	0.95	1.00	1.00	1.00	1.00	1.00	1.00	1.00
Turning Factor (vph)	0.95	0.99	0.85	0.95	0.98	0.85	0.95	0.98	0.85	0.95	0.98	0.85
Saturated Flow (vph)	1520	3017	0	1520	2992	0	1520	1568	0	1520	1566	0
Ped Intf Time (s)	0.0	0.0	0.0	0.0	0.0	0.0	0.0	0.0	0.0	0.0	0.0	0.0
Pedestrian Frequency (%)		0.00			0.00			0.00			0.00	
Protected Option Allowed		Yes			Yes			Yes			Yes	
Reference Time (s)	3.1	14.9	0.0	2.4	19.2	0.0	2.5	23.4	0.0	3.2	16.2	0.0
Adj Reference Time (s)	11.0	19.9	0.0	12.0	24.2	0.0	12.0	28.5	0.0	13.0	21.3	0.0
Permitted Option												
Adj Saturation A (vph)	101	1509		101	1496		101	1568		101	1566	
Reference Time A (s)	46.2	14.9		36.7	19.2		37.9	23.4		48.6	16.2	
Adj Saturation B (vph	NA	NA		NA	NA		NA	NA		NA	NA	
Reference Time B (s)	NA	NA		NA	NA		NA	NA		NA	NA	
Reference Time (s)		46.2			36.7			37.9			48.6	
Adj Reference Time (s)		51.2			41.7			43.0			53.7	
Split Option												
Ref Time Combined (s)	3.1	14.9		2.4	19.2		2.5	23.4		3.2	16.2	
Ref Time Seperate (s)	3.1	13.9		2.4	16.9		2.5	20.3		3.2	13.9	
Reference Time (s)	14.9	14.9		19.2	19.2		23.4	23.4		16.2	16.2	
Adj Reference Time (s)	19.9	19.9		24.2	24.2		28.5	28.5		21.3	21.3	

Summary	EB WB	NB SB	Combined
Protected Option (s)	35.2	41.5	
Permitted Option (s)	51.2	53.7	
Split Option (s)	44.0	49.8	
Minimum (s)	35.2	41.5	76.7

Right Turns
Adj Reference Time (s)
Cross Thru Ref Time (s)
Oncoming Left Ref Time (s)
Combined (s)

Intersection Summary			
Intersection Capacity Utilization	63.9%	ICU Level of Service	B

Reference Times and Phasing Options do not represent an optimized timing plan.

Movement	EBL	EBT	EBR	WBL	WBT	WBR	NBL	NBT	NBR	SBL	SBT	SBR
Lane Configurations												
Volume (vph)	19	27	12	10	25	15	31	311	15	5	231	9
Pedestrians												
Ped Button												
Pedestrian Timing (s)												
Free Right			No			No			No			No
Ideal Flow	1600	1600	1600	1600	1600	1600	1600	1600	1600	1600	1600	1600
Lost Time (s)	4.6	4.6	4.0	4.6	4.6	4.0	4.0	5.0	4.0	4.0	5.0	4.0
Minimum Green (s)	7.0	7.0	4.0	7.0	7.0	4.0	8.0	10.0	4.0	9.0	10.0	4.0
Refr Cycle Length (s)	120	120	120	120	120	120	120	120	120	120	120	120
Volume Combined (vph)	0	58	0	0	50	0	31	326	0	5	240	0
Lane Utilization Factor	1.00	1.00	1.00	1.00	1.00	1.00	1.00	1.00	1.00	1.00	1.00	1.00
Turning Factor (vph)	0.95	0.95	0.85	0.95	0.95	0.85	0.95	0.99	0.85	0.95	0.99	0.85
Saturated Flow (vph)	0	1525	0	0	1513	0	1520	1589	0	1520	1591	0
Ped Intf Time (s)	0.0	0.0	0.0	0.0	0.0	0.0	0.0	0.0	0.0	0.0	0.0	0.0
Pedestrian Frequency (%)		0.00			0.00			0.00			0.00	
Protected Option Allowed		No			No			Yes			Yes	
Reference Time (s)			0.0			0.0	2.4	24.6	0.0	0.4	18.1	0.0
Adj Reference Time (s)			0.0			0.0	12.0	29.6	0.0	13.0	23.1	0.0
Permitted Option												
Adj Saturation A (vph)	0	923		0	1312		101	1589		101	1591	
Reference Time A (s)	0.0	7.5		0.0	4.6		36.7	24.6		5.9	18.1	
Adj Saturation B (vph	0	0		0	0		NA	NA		NA	NA	
Reference Time B (s)	9.5	12.6		8.8	12.0		NA	NA		NA	NA	
Reference Time (s)		7.5			4.6			36.7			18.1	
Adj Reference Time (s)		12.1			11.6			41.7			23.1	
Split Option												
Ref Time Combined (s)	0.0	4.6		0.0	4.0		2.4	24.6		0.4	18.1	
Ref Time Seperate (s)	1.5	2.1		0.8	2.0		2.4	23.5		0.4	17.4	
Reference Time (s)	4.6	4.6		4.0	4.0		24.6	24.6		18.1	18.1	
Adj Reference Time (s)	11.6	11.6		11.6	11.6		29.6	29.6		23.1	23.1	

Summary	EB WB	NB SB	Combined
Protected Option (s)	NA	42.6	
Permitted Option (s)	12.1	41.7	
Split Option (s)	23.2	52.7	
Minimum (s)	12.1	41.7	53.8

Right Turns
Adj Reference Time (s)
Cross Thru Ref Time (s)
Oncoming Left Ref Time (s)
Combined (s)

Intersection Summary			
Intersection Capacity Utilization	44.9%	ICU Level of Service	A

Reference Times and Phasing Options do not represent an optimized timing plan.

Movement	EBL	EBT	EBR	WBL	WBT	WBR	NBL	NBT	NBR	SBL	SBT	SBR
Lane Configurations												
Volume (vph)	15	52	9	45	163	13	21	297	21	15	254	26
Pedestrians												
Ped Button												
Pedestrian Timing (s)												
Free Right			No			No			No			No
Ideal Flow	1900	1900	1900	1900	1900	1900	1900	1900	1900	1900	1900	1900
Lost Time (s)	5.0	5.0	4.0	5.0	5.0	4.0	4.0	5.0	4.0	4.0	5.0	4.0
Minimum Green (s)	7.0	7.0	4.0	7.0	7.0	4.0	8.0	10.0	4.0	9.0	10.0	4.0
Refr Cycle Length (s)	120	120	120	120	120	120	120	120	120	120	120	120
Volume Combined (vph)	15	61	0	45	176	0	21	318	0	15	280	0
Lane Utilization Factor	1.00	0.95	1.00	1.00	0.95	1.00	1.00	1.00	1.00	1.00	1.00	1.00
Turning Factor (vph)	0.95	0.98	0.85	0.95	0.99	0.85	0.95	0.99	0.85	0.95	0.99	0.85
Saturated Flow (vph)	1805	3538	0	1805	3578	0	1805	1881	0	1805	1874	0
Ped Intf Time (s)	0.0	0.0	0.0	0.0	0.0	0.0	0.0	0.0	0.0	0.0	0.0	0.0
Pedestrian Frequency (%)		0.00			0.00			0.00			0.00	
Protected Option Allowed		Yes			Yes			Yes			Yes	
Reference Time (s)	1.0	2.1	0.0	3.0	5.9	0.0	1.4	20.3	0.0	1.0	17.9	0.0
Adj Reference Time (s)	12.0	12.0	0.0	12.0	12.0	0.0	12.0	25.3	0.0	13.0	22.9	0.0
Permitted Option												
Adj Saturation A (vph)	120	1769		120	1789		120	1881		120	1874	
Reference Time A (s)	15.0	2.1		44.9	5.9		20.9	20.3		15.0	17.9	
Adj Saturation B (vph	NA	NA		0	3578		NA	NA		NA	NA	
Reference Time B (s)	NA	NA		11.0	5.9		NA	NA		NA	NA	
Reference Time (s)		15.0			11.0			20.9			17.9	
Adj Reference Time (s)		20.0			16.0			25.9			22.9	
Split Option												
Ref Time Combined (s)	1.0	2.1		3.0	5.9		1.4	20.3		1.0	17.9	
Ref Time Seperate (s)	1.0	1.8		3.0	5.5		1.4	18.9		1.0	16.3	
Reference Time (s)	2.1	2.1		5.9	5.9		20.3	20.3		17.9	17.9	
Adj Reference Time (s)	12.0	12.0		12.0	12.0		25.3	25.3		22.9	22.9	

Summary	EB WB	NB SB	Combined
Protected Option (s)	24.0	38.3	
Permitted Option (s)	20.0	25.9	
Split Option (s)	24.0	48.2	
Minimum (s)	20.0	25.9	45.9

Right Turns
Adj Reference Time (s)
Cross Thru Ref Time (s)
Oncoming Left Ref Time (s)
Combined (s)

Intersection Summary			
Intersection Capacity Utilization	38.3%	ICU Level of Service	A

Reference Times and Phasing Options do not represent an optimized timing plan.

Movement	EBL	EBT	EBR	WBL	WBT	WBR	NBL	NBT	NBR	SBL	SBT	SBR
Lane Configurations												
Volume (vph)	30	746	39	32	939	35	74	279	49	43	173	57
Pedestrians												
Ped Button												
Pedestrian Timing (s)												
Free Right			No			No			No			No
Ideal Flow	1900	1900	1900	1900	1900	1900	1900	1900	1900	1900	1900	1900
Lost Time (s)	5.0	5.0	4.0	5.0	5.0	4.0	4.0	6.0	4.0	4.0	6.0	4.0
Minimum Green (s)	9.0	9.0	4.0	9.0	9.0	4.0	9.0	9.0	4.0	9.0	9.0	4.0
Refr Cycle Length (s)	120	120	120	120	120	120	120	120	120	120	120	120
Volume Combined (vph)	30	785	0	32	974	0	74	328	0	43	230	0
Lane Utilization Factor	1.00	0.95	1.00	1.00	0.95	1.00	1.00	1.00	1.00	1.00	1.00	1.00
Turning Factor (vph)	0.95	0.99	0.85	0.95	0.99	0.85	0.95	0.98	0.85	0.95	0.96	0.85
Saturated Flow (vph)	1805	3591	0	1805	3598	0	1805	1857	0	1805	1829	0
Ped Intf Time (s)	0.0	0.0	0.0	0.0	0.0	0.0	0.0	0.0	0.0	0.0	0.0	0.0
Pedestrian Frequency (%)		0.00			0.00			0.00			0.00	
Protected Option Allowed		Yes			Yes			Yes			Yes	
Reference Time (s)	2.0	26.2	0.0	2.1	32.5	0.0	4.9	21.2	0.0	2.9	15.1	0.0
Adj Reference Time (s)	14.0	31.2	0.0	14.0	37.5	0.0	13.0	27.2	0.0	13.0	21.1	0.0
Permitted Option												
Adj Saturation A (vph)	120	1795		120	1799		120	1857		120	1829	
Reference Time A (s)	29.9	26.2		31.9	32.5		73.8	21.2		42.9	15.1	
Adj Saturation B (vph	NA	NA		NA	NA		NA	NA		NA	NA	
Reference Time B (s)	NA	NA		NA	NA		NA	NA		NA	NA	
Reference Time (s)		29.9			32.5			73.8			42.9	
Adj Reference Time (s)		34.9			37.5			79.8			48.9	
Split Option												
Ref Time Combined (s)	2.0	26.2		2.1	32.5		4.9	21.2		2.9	15.1	
Ref Time Seperate (s)	2.0	24.9		2.1	31.3		4.9	18.0		2.9	11.3	
Reference Time (s)	26.2	26.2		32.5	32.5		21.2	21.2		15.1	15.1	
Adj Reference Time (s)	31.2	31.2		37.5	37.5		27.2	27.2		21.1	21.1	

Summary	EB WB	NB SB	Combined
Protected Option (s)	51.5	40.2	
Permitted Option (s)	37.5	79.8	
Split Option (s)	68.7	48.3	
Minimum (s)	37.5	40.2	77.7

Right Turns
Adj Reference Time (s)
Cross Thru Ref Time (s)
Oncoming Left Ref Time (s)
Combined (s)

Intersection Summary			
Intersection Capacity Utilization	64.7%	ICU Level of Service	C

Reference Times and Phasing Options do not represent an optimized timing plan.

Movement	EBL	EBT	EBR	WBL	WBT	WBR	NBL	NBT	NBR	SBL	SBT	SBR
Lane Configurations												
Volume (vph)	13	387	32	10	471	20	36	67	15	10	31	22
Pedestrians												
Ped Button												
Pedestrian Timing (s)												
Free Right			No			No			No			No
Ideal Flow	1900	1900	1900	1900	1900	1900	1900	1900	1900	1900	1900	1900
Lost Time (s)	5.0	5.0	4.0	5.0	5.0	4.0	5.0	5.0	4.0	5.0	5.0	4.0
Minimum Green (s)	21.0	21.0	4.0	21.0	21.0	4.0	17.0	17.0	4.0	17.0	17.0	4.0
Refr Cycle Length (s)	120	120	120	120	120	120	120	120	120	120	120	120
Volume Combined (vph)	0	432	0	0	501	0	0	118	0	0	63	0
Lane Utilization Factor	1.00	0.95	1.00	1.00	0.95	1.00	1.00	0.95	1.00	1.00	0.95	1.00
Turning Factor (vph)	0.95	0.99	0.85	0.95	0.99	0.85	0.95	0.97	0.85	0.95	0.94	0.85
Saturated Flow (vph)	0	3572	0	0	3592	0	0	3494	0	0	3401	0
Ped Intf Time (s)	0.0	0.0	0.0	0.0	0.0	0.0	0.0	0.0	0.0	0.0	0.0	0.0
Pedestrian Frequency (%)		0.00			0.00			0.00			0.00	
Protected Option Allowed		No			No			No			No	
Reference Time (s)			0.0			0.0			0.0			0.0
Adj Reference Time (s)			0.0			0.0			0.0			0.0
Permitted Option												
Adj Saturation A (vph)	0	895		0	1107		0	116		0	125	
Reference Time A (s)	0.0	25.5		0.0	25.0		0.0	37.1		0.0	11.1	
Adj Saturation B (vph	NA	NA		NA	NA		0	1759		0	1696	
Reference Time B (s)	NA	NA		NA	NA		10.4	8.0		8.7	6.2	
Reference Time (s)		25.5			25.0			10.4			8.7	
Adj Reference Time (s)		30.5			30.0			22.0			22.0	
Split Option												
Ref Time Combined (s)	0.0	14.5		0.0	16.7		0.0	4.1		0.0	2.2	
Ref Time Seperate (s)	0.9	13.0		0.7	15.7		2.4	2.3		0.7	1.1	
Reference Time (s)	14.5	14.5		16.7	16.7		4.1	4.1		2.2	2.2	
Adj Reference Time (s)	26.0	26.0		26.0	26.0		22.0	22.0		22.0	22.0	

Summary	EB WB	NB SB	Combined
Protected Option (s)	NA	NA	
Permitted Option (s)	30.5	22.0	
Split Option (s)	52.0	44.0	
Minimum (s)	30.5	22.0	52.5

Right Turns
Adj Reference Time (s)
Cross Thru Ref Time (s)
Oncoming Left Ref Time (s)
Combined (s)

Intersection Summary			
Intersection Capacity Utilization	43.7%	ICU Level of Service	A

Reference Times and Phasing Options do not represent an optimized timing plan.

Movement	EBL	EBT	EBR	WBL	WBT	WBR	NBL	NBT	NBR	SBL	SBT	SBR
Lane Configurations												
Volume (vph)	4	13	8	29	27	28	14	90	6	12	45	12
Pedestrians												
Ped Button												
Pedestrian Timing (s)												
Free Right			No			No			No			No
Ideal Flow	1900	1900	1900	1900	1900	1900	1900	1900	1900	1900	1900	1900
Lost Time (s)	4.0	4.0	4.0	4.0	4.0	4.0	4.0	4.0	4.0	4.0	4.0	4.0
Minimum Green (s)	4.0	4.0	4.0	4.0	4.0	4.0	4.0	4.0	4.0	4.0	4.0	4.0
Refr Cycle Length (s)	120	120	120	120	120	120	120	120	120	120	120	120
Volume Combined (vph)	0	25	0	0	84	0	0	104	6	0	57	12
Lane Utilization Factor	1.00	1.00	1.00	1.00	1.00	1.00	1.00	1.00	1.00	1.00	1.00	1.00
Turning Factor (vph)	0.95	0.94	0.85	0.95	0.93	0.85	0.95	0.99	0.85	0.95	0.99	0.85
Saturated Flow (vph)	0	1794	0	0	1774	0	0	1887	1615	0	1880	1615
Ped Intf Time (s)	0.0	0.0	0.0	0.0	0.0	0.0	0.0	0.0	0.0	0.0	0.0	0.0
Pedestrian Frequency (%)		0.00			0.00			0.00			0.00	
Protected Option Allowed		No			No			No			No	
Reference Time (s)			0.0			0.0			0.4			0.9
Adj Reference Time (s)			0.0			0.0			8.0			8.0
Permitted Option												
Adj Saturation A (vph)	0	1633		0	932		0	627		0	447	
Reference Time A (s)	0.0	1.8		0.0	10.8		0.0	19.9		0.0	15.3	
Adj Saturation B (vph	0	0		0	0		0	0		0	0	
Reference Time B (s)	8.3	9.7		9.9	13.7		8.9	14.6		8.8	11.6	
Reference Time (s)		1.8			10.8			14.6			11.6	
Adj Reference Time (s)		8.0			14.8			18.6			15.6	
Split Option												
Ref Time Combined (s)	0.0	1.7		0.0	5.7		0.0	6.6		0.0	3.6	
Ref Time Seperate (s)	0.3	0.9		1.9	1.8		0.9	5.7		0.8	2.8	
Reference Time (s)	1.7	1.7		5.7	5.7		6.6	6.6		3.6	3.6	
Adj Reference Time (s)	8.0	8.0		9.7	9.7		10.6	10.6		8.0	8.0	

Summary	EB WB	NB SB	Combined
Protected Option (s)	NA	NA	
Permitted Option (s)	14.8	18.6	
Split Option (s)	17.7	18.6	
Minimum (s)	14.8	18.6	33.4

Right Turns	NBR	SBR
Adj Reference Time (s)	8.0	8.0
Cross Thru Ref Time (s)	8.0	9.7
Oncoming Left Ref Time (s)	8.0	10.6
Combined (s)	24.0	28.3

Intersection Summary			
Intersection Capacity Utilization	27.9%	ICU Level of Service	A

Reference Times and Phasing Options do not represent an optimized timing plan.

Movement	EBL	EBT	EBR	WBL	WBT	WBR	NBL	NBT	NBR	SBL	SBT	SBR
Lane Configurations												
Volume (vph)	14	49	14	13	181	15	32	63	15	14	70	32
Pedestrians												
Ped Button												
Pedestrian Timing (s)												
Free Right			No			No			No			No
Ideal Flow	1900	1900	1900	1900	1900	1900	1900	1900	1900	1900	1900	1900
Lost Time (s)	4.5	4.5	4.5	4.5	4.5	4.5	4.5	4.5	4.0	4.5	4.5	4.0
Minimum Green (s)	22.0	22.0	22.0	22.0	22.0	22.0	19.0	19.0	4.0	19.0	19.0	4.0
Refr Cycle Length (s)	120	120	120	120	120	120	120	120	120	120	120	120
Volume Combined (vph)	14	49	14	13	181	15	0	110	0	0	116	0
Lane Utilization Factor	1.00	1.00	1.00	1.00	1.00	1.00	1.00	0.95	1.00	1.00	0.95	1.00
Turning Factor (vph)	0.95	1.00	0.85	0.95	1.00	0.85	0.95	0.97	0.85	0.95	0.95	0.85
Saturated Flow (vph)	1805	1900	1615	1805	1900	1615	0	3492	0	0	3447	0
Ped Intf Time (s)	0.0	0.0	0.0	0.0	0.0	0.0	0.0	0.0	0.0	0.0	0.0	0.0
Pedestrian Frequency (%)		0.00			0.00			0.00			0.00	
Protected Option Allowed		Yes			Yes			No			No	
Reference Time (s)	0.9	3.1	1.0	0.9	11.4	1.1			0.0			0.0
Adj Reference Time (s)	26.5	26.5	26.5	26.5	26.5	26.5			0.0			0.0
Permitted Option												
Adj Saturation A (vph)	120	1900		120	1900		0	116		0	209	
Reference Time A (s)	14.0	3.1		13.0	11.4		0.0	33.0		0.0	17.2	
Adj Saturation B (vph	NA	NA		0	1900		0	1757		0	1724	
Reference Time B (s)	NA	NA		8.9	11.4		10.1	7.8		8.9	8.0	
Reference Time (s)		14.0			11.4			10.1			8.9	
Adj Reference Time (s)		26.5			26.5			23.5			23.5	
Split Option												
Ref Time Combined (s)	0.9	3.1		0.9	11.4		0.0	3.8		0.0	4.0	
Ref Time Seperate (s)	0.9	3.1		0.9	11.4		2.1	2.2		0.9	2.4	
Reference Time (s)	3.1	3.1		11.4	11.4		3.8	3.8		4.0	4.0	
Adj Reference Time (s)	26.5	26.5		26.5	26.5		23.5	23.5		23.5	23.5	

Summary	EB WB	NB SB	Combined
Protected Option (s)	53.0	NA	
Permitted Option (s)	26.5	23.5	
Split Option (s)	53.0	47.0	
Minimum (s)	26.5	23.5	50.0

Right Turns	EBR	WBR
Adj Reference Time (s)	26.5	26.5
Cross Thru Ref Time (s)	23.5	23.5
Oncoming Left Ref Time (s)	26.5	26.5
Combined (s)	76.5	76.5

Intersection Summary			
Intersection Capacity Utilization	63.7%	ICU Level of Service	B

Reference Times and Phasing Options do not represent an optimized timing plan.

Movement	EBL	EBT	EBR	WBL	WBT	WBR	NBL	NBT	NBR	SBL	SBT	SBR
Lane Configurations												
Volume (vph)	63	744	37	10	1023	17	25	32	14	20	41	88
Pedestrians												
Ped Button												
Pedestrian Timing (s)												
Free Right			No			No			No			No
Ideal Flow	1900	1900	1900	1900	1900	1900	1900	1900	1900	1900	1900	1900
Lost Time (s)	5.0	5.0	4.0	5.0	5.0	4.0	5.0	5.0	4.0	5.0	5.0	4.0
Minimum Green (s)	24.0	24.0	4.0	24.0	24.0	4.0	7.0	7.0	4.0	7.0	7.0	4.0
Refr Cycle Length (s)	120	120	120	120	120	120	120	120	120	120	120	120
Volume Combined (vph)	63	781	0	10	1040	0	0	71	0	0	149	0
Lane Utilization Factor	1.00	0.95	1.00	1.00	0.95	1.00	1.00	0.95	1.00	1.00	0.95	1.00
Turning Factor (vph)	0.95	0.99	0.85	0.95	1.00	0.85	0.95	0.95	0.85	0.95	0.91	0.85
Saturated Flow (vph)	1805	3592	0	1805	3609	0	0	3449	0	0	3275	0
Ped Intf Time (s)	0.0	0.0	0.0	0.0	0.0	0.0	0.0	0.0	0.0	0.0	0.0	0.0
Pedestrian Frequency (%)		0.00			0.00			0.00			0.00	
Protected Option Allowed		Yes			Yes			No			No	
Reference Time (s)	4.2	26.1	0.0	0.7	34.6	0.0			0.0			0.0
Adj Reference Time (s)	29.0	31.1	0.0	29.0	39.6	0.0			0.0			0.0
Permitted Option												
Adj Saturation A (vph)	120	1796		120	1804		0	115		0	165	
Reference Time A (s)	62.8	26.1		10.0	34.6		0.0	26.1		0.0	25.1	
Adj Saturation B (vph	NA	NA		NA	NA		NA	NA		0	1624	
Reference Time B (s)	NA	NA		NA	NA		NA	NA		9.3	9.5	
Reference Time (s)		62.8			34.6			26.1			9.5	
Adj Reference Time (s)		67.8			39.6			31.1			14.5	
Split Option												
Ref Time Combined (s)	4.2	26.1		0.7	34.6		0.0	2.5		0.0	5.5	
Ref Time Seperate (s)	4.2	24.9		0.7	34.0		1.7	1.1		1.3	1.5	
Reference Time (s)	26.1	26.1		34.6	34.6		2.5	2.5		5.5	5.5	
Adj Reference Time (s)	31.1	31.1		39.6	39.6		12.0	12.0		12.0	12.0	

Summary	EB WB	NB SB	Combined
Protected Option (s)	68.6	NA	
Permitted Option (s)	67.8	31.1	
Split Option (s)	70.7	24.0	
Minimum (s)	67.8	24.0	91.8

Right Turns
Adj Reference Time (s)
Cross Thru Ref Time (s)
Oncoming Left Ref Time (s)
Combined (s)

Intersection Summary			
Intersection Capacity Utilization	76.5%	ICU Level of Service	D

Reference Times and Phasing Options do not represent an optimized timing plan.

Intersection Capacity Utilization
1: E Street & 9th Street

08-14-2024

Movement	EBL	EBT	EBR	WBL	WBT	WBR	NBL	NBT	NBR	SBL	SBT	SBR
Lane Configurations												
Volume (vph)	16	455	34	51	418	71	15	130	20	56	209	26
Pedestrians												
Ped Button												
Pedestrian Timing (s)												
Free Right			No			No			No			No
Ideal Flow	1600	1600	1600	1600	1600	1600	1600	1600	1600	1600	1600	1600
Lost Time (s)	4.0	5.0	4.0	4.0	5.0	4.0	4.0	5.1	4.0	4.0	5.1	4.0
Minimum Green (s)	7.0	6.0	4.0	8.0	6.0	4.0	8.0	10.0	4.0	9.0	10.0	4.0
Refr Cycle Length (s)	120	120	120	120	120	120	120	120	120	120	120	120
Volume Combined (vph)	16	489	0	51	489	0	15	150	0	56	235	0
Lane Utilization Factor	1.00	0.95	1.00	1.00	0.95	1.00	1.00	1.00	1.00	1.00	1.00	1.00
Turning Factor (vph)	0.95	0.99	0.85	0.95	0.98	0.85	0.95	0.98	0.85	0.95	0.98	0.85
Saturated Flow (vph)	1520	3015	0	1520	2980	0	1520	1568	0	1520	1573	0
Ped Intf Time (s)	0.0	0.0	0.0	0.0	0.0	0.0	0.0	0.0	0.0	0.0	0.0	0.0
Pedestrian Frequency (%)		0.00			0.00			0.00			0.00	
Protected Option Allowed		Yes			Yes			Yes			Yes	
Reference Time (s)	1.3	19.5	0.0	4.0	19.7	0.0	1.2	11.5	0.0	4.4	17.9	0.0
Adj Reference Time (s)	11.0	24.5	0.0	12.0	24.7	0.0	12.0	16.6	0.0	13.0	23.0	0.0
Permitted Option												
Adj Saturation A (vph)	101	1507		101	1490		101	1568		101	1573	
Reference Time A (s)	18.9	19.5		60.4	19.7		17.8	11.5		66.3	17.9	
Adj Saturation B (vph	NA	NA		NA	NA		NA	NA		NA	NA	
Reference Time B (s)	NA	NA		NA	NA		NA	NA		NA	NA	
Reference Time (s)		19.5			60.4			17.8			66.3	
Adj Reference Time (s)		24.5			65.4			22.9			71.4	
Split Option												
Ref Time Combined (s)	1.3	19.5		4.0	19.7		1.2	11.5		4.4	17.9	
Ref Time Seperate (s)	1.3	18.1		4.0	16.8		1.2	9.9		4.4	15.9	
Reference Time (s)	19.5	19.5		19.7	19.7		11.5	11.5		17.9	17.9	
Adj Reference Time (s)	24.5	24.5		24.7	24.7		16.6	16.6		23.0	23.0	

Summary	EB WB	NB SB	Combined
Protected Option (s)	36.5	35.0	
Permitted Option (s)	65.4	71.4	
Split Option (s)	49.2	39.6	
Minimum (s)	36.5	35.0	71.5

Right Turns
Adj Reference Time (s)
Cross Thru Ref Time (s)
Oncoming Left Ref Time (s)
Combined (s)

Intersection Summary			
Intersection Capacity Utilization	59.6%	ICU Level of Service	B

Reference Times and Phasing Options do not represent an optimized timing plan.

Movement	EBL	EBT	EBR	WBL	WBT	WBR	NBL	NBT	NBR	SBL	SBT	SBR
Lane Configurations												
Volume (vph)	4	21	7	4	30	7	15	181	25	6	252	17
Pedestrians												
Ped Button												
Pedestrian Timing (s)												
Free Right			No			No			No			No
Ideal Flow	1600	1600	1600	1600	1600	1600	1600	1600	1600	1600	1600	1600
Lost Time (s)	4.6	4.6	4.0	4.6	4.6	4.0	4.0	5.0	4.0	4.0	5.0	4.0
Minimum Green (s)	7.0	7.0	4.0	7.0	7.0	4.0	8.0	10.0	4.0	9.0	10.0	4.0
Refr Cycle Length (s)	120	120	120	120	120	120	120	120	120	120	120	120
Volume Combined (vph)	0	32	0	0	41	0	15	206	0	6	269	0
Lane Utilization Factor	1.00	1.00	1.00	1.00	1.00	1.00	1.00	1.00	1.00	1.00	1.00	1.00
Turning Factor (vph)	0.95	0.96	0.85	0.95	0.97	0.85	0.95	0.98	0.85	0.95	0.99	0.85
Saturated Flow (vph)	0	1538	0	0	1551	0	1520	1571	0	1520	1585	0
Ped Intf Time (s)	0.0	0.0	0.0	0.0	0.0	0.0	0.0	0.0	0.0	0.0	0.0	0.0
Pedestrian Frequency (%)		0.00			0.00			0.00			0.00	
Protected Option Allowed		No			No			Yes			Yes	
Reference Time (s)			0.0			0.0	1.2	15.7	0.0	0.5	20.4	0.0
Adj Reference Time (s)			0.0			0.0	12.0	20.7	0.0	13.0	25.4	0.0
Permitted Option												
Adj Saturation A (vph)	0	1078		0	1241		101	1571		101	1585	
Reference Time A (s)	0.0	3.6		0.0	4.0		17.8	15.7		7.1	20.4	
Adj Saturation B (vph	0	0		0	0		NA	NA		NA	NA	
Reference Time B (s)	8.3	10.5		8.3	11.2		NA	NA		NA	NA	
Reference Time (s)		3.6			4.0			17.8			20.4	
Adj Reference Time (s)		11.6			11.6			22.8			25.4	
Split Option												
Ref Time Combined (s)	0.0	2.5		0.0	3.2		1.2	15.7		0.5	20.4	
Ref Time Seperate (s)	0.3	1.6		0.3	2.3		1.2	13.8		0.5	19.1	
Reference Time (s)	2.5	2.5		3.2	3.2		15.7	15.7		20.4	20.4	
Adj Reference Time (s)	11.6	11.6		11.6	11.6		20.7	20.7		25.4	25.4	

Summary	EB WB	NB SB	Combined
Protected Option (s)	NA	37.4	
Permitted Option (s)	11.6	25.4	
Split Option (s)	23.2	46.1	
Minimum (s)	11.6	25.4	37.0

Right Turns
Adj Reference Time (s)
Cross Thru Ref Time (s)
Oncoming Left Ref Time (s)
Combined (s)

Intersection Summary			
Intersection Capacity Utilization	30.8%	ICU Level of Service	A

Reference Times and Phasing Options do not represent an optimized timing plan.

Movement	EBL	EBT	EBR	WBL	WBT	WBR	NBL	NBT	NBR	SBL	SBT	SBR
Lane Configurations												
Volume (vph)	36	127	35	16	58	13	20	197	60	17	239	15
Pedestrians												
Ped Button												
Pedestrian Timing (s)												
Free Right			No			No			No			No
Ideal Flow	1900	1900	1900	1900	1900	1900	1900	1900	1900	1900	1900	1900
Lost Time (s)	5.0	5.0	4.0	5.0	5.0	4.0	4.0	5.0	4.0	4.0	5.0	4.0
Minimum Green (s)	7.0	7.0	4.0	7.0	7.0	4.0	8.0	10.0	4.0	9.0	10.0	4.0
Refr Cycle Length (s)	120	120	120	120	120	120	120	120	120	120	120	120
Volume Combined (vph)	36	162	0	16	71	0	20	257	0	17	254	0
Lane Utilization Factor	1.00	0.95	1.00	1.00	0.95	1.00	1.00	1.00	1.00	1.00	1.00	1.00
Turning Factor (vph)	0.95	0.97	0.85	0.95	0.97	0.85	0.95	0.96	0.85	0.95	0.99	0.85
Saturated Flow (vph)	1805	3500	0	1805	3518	0	1805	1833	0	1805	1883	0
Ped Intf Time (s)	0.0	0.0	0.0	0.0	0.0	0.0	0.0	0.0	0.0	0.0	0.0	0.0
Pedestrian Frequency (%)		0.00			0.00			0.00			0.00	
Protected Option Allowed		Yes			Yes			Yes			Yes	
Reference Time (s)	2.4	5.6	0.0	1.1	2.4	0.0	1.3	16.8	0.0	1.1	16.2	0.0
Adj Reference Time (s)	12.0	12.0	0.0	12.0	12.0	0.0	12.0	21.8	0.0	13.0	21.2	0.0
Permitted Option												
Adj Saturation A (vph)	120	1750		120	1759		120	1833		120	1883	
Reference Time A (s)	35.9	5.6		16.0	2.4		19.9	16.8		17.0	16.2	
Adj Saturation B (vph	0	3500		NA	NA		NA	NA		NA	NA	
Reference Time B (s)	10.4	5.6		NA	NA		NA	NA		NA	NA	
Reference Time (s)		10.4			16.0			19.9			17.0	
Adj Reference Time (s)		15.4			21.0			24.9			22.0	
Split Option												
Ref Time Combined (s)	2.4	5.6		1.1	2.4		1.3	16.8		1.1	16.2	
Ref Time Seperate (s)	2.4	4.4		1.1	2.0		1.3	12.9		1.1	15.2	
Reference Time (s)	5.6	5.6		2.4	2.4		16.8	16.8		16.2	16.2	
Adj Reference Time (s)	12.0	12.0		12.0	12.0		21.8	21.8		21.2	21.2	

Summary	EB WB	NB SB	Combined
Protected Option (s)	24.0	34.8	
Permitted Option (s)	21.0	24.9	
Split Option (s)	24.0	43.0	
Minimum (s)	21.0	24.9	45.9

Right Turns
Adj Reference Time (s)
Cross Thru Ref Time (s)
Oncoming Left Ref Time (s)
Combined (s)

Intersection Summary			
Intersection Capacity Utilization	38.3%	ICU Level of Service	A

Reference Times and Phasing Options do not represent an optimized timing plan.

Movement	EBL	EBT	EBR	WBL	WBT	WBR	NBL	NBT	NBR	SBL	SBT	SBR
Lane Configurations												
Volume (vph)	132	1510	51	17	702	20	29	124	37	35	194	39
Pedestrians												
Ped Button												
Pedestrian Timing (s)												
Free Right			No			No			No			No
Ideal Flow	1900	1900	1900	1900	1900	1900	1900	1900	1900	1900	1900	1900
Lost Time (s)	5.0	5.0	4.0	5.0	5.0	4.0	4.0	6.0	4.0	4.0	6.0	4.0
Minimum Green (s)	9.0	9.0	4.0	9.0	9.0	4.0	9.0	9.0	4.0	9.0	9.0	4.0
Refr Cycle Length (s)	120	120	120	120	120	120	120	120	120	120	120	120
Volume Combined (vph)	132	1561	0	17	722	0	29	161	0	35	233	0
Lane Utilization Factor	1.00	0.95	1.00	1.00	0.95	1.00	1.00	1.00	1.00	1.00	1.00	1.00
Turning Factor (vph)	0.95	1.00	0.85	0.95	1.00	0.85	0.95	0.97	0.85	0.95	0.97	0.85
Saturated Flow (vph)	1805	3600	0	1805	3603	0	1805	1835	0	1805	1852	0
Ped Intf Time (s)	0.0	0.0	0.0	0.0	0.0	0.0	0.0	0.0	0.0	0.0	0.0	0.0
Pedestrian Frequency (%)		0.00			0.00			0.00			0.00	
Protected Option Allowed		Yes			Yes			Yes			Yes	
Reference Time (s)	8.8	52.0	0.0	1.1	24.0	0.0	1.9	10.5	0.0	2.3	15.1	0.0
Adj Reference Time (s)	14.0	57.0	0.0	14.0	29.0	0.0	13.0	16.5	0.0	13.0	21.1	0.0
Permitted Option												
Adj Saturation A (vph)	120	1800		120	1801		120	1835		120	1852	
Reference Time A (s)	131.6	52.0		17.0	24.0		28.9	10.5		34.9	15.1	
Adj Saturation B (vph	NA	NA		NA	NA		NA	NA		NA	NA	
Reference Time B (s)	NA	NA		NA	NA		NA	NA		NA	NA	
Reference Time (s)		131.6			24.0			28.9			34.9	
Adj Reference Time (s)		136.6			29.0			34.9			40.9	
Split Option												
Ref Time Combined (s)	8.8	52.0		1.1	24.0		1.9	10.5		2.3	15.1	
Ref Time Seperate (s)	8.8	50.3		1.1	23.4		1.9	8.1		2.3	12.6	
Reference Time (s)	52.0	52.0		24.0	24.0		10.5	10.5		15.1	15.1	
Adj Reference Time (s)	57.0	57.0		29.0	29.0		16.5	16.5		21.1	21.1	

Summary	EB WB	NB SB	Combined
Protected Option (s)	71.0	34.1	
Permitted Option (s)	136.6	40.9	
Split Option (s)	86.1	37.6	
Minimum (s)	71.0	34.1	105.1

Right Turns
Adj Reference Time (s)
Cross Thru Ref Time (s)
Oncoming Left Ref Time (s)
Combined (s)

Intersection Summary			
Intersection Capacity Utilization	87.6%	ICU Level of Service	E

Reference Times and Phasing Options do not represent an optimized timing plan.

Movement	EBL	EBT	EBR	WBL	WBT	WBR	NBL	NBT	NBR	SBL	SBT	SBR
Lane Configurations												
Volume (vph)	11	478	92	33	394	22	12	35	15	15	97	17
Pedestrians												
Ped Button												
Pedestrian Timing (s)												
Free Right			No			No			No			No
Ideal Flow	1900	1900	1900	1900	1900	1900	1900	1900	1900	1900	1900	1900
Lost Time (s)	5.0	5.0	4.0	5.0	5.0	4.0	5.0	5.0	4.0	5.0	5.0	4.0
Minimum Green (s)	21.0	21.0	4.0	21.0	21.0	4.0	17.0	17.0	4.0	17.0	17.0	4.0
Refr Cycle Length (s)	120	120	120	120	120	120	120	120	120	120	120	120
Volume Combined (vph)	0	581	0	0	449	0	0	62	0	0	129	0
Lane Utilization Factor	1.00	0.95	1.00	1.00	0.95	1.00	1.00	0.95	1.00	1.00	0.95	1.00
Turning Factor (vph)	0.95	0.98	0.85	0.95	0.99	0.85	0.95	0.95	0.85	0.95	0.97	0.85
Saturated Flow (vph)	0	3528	0	0	3578	0	0	3453	0	0	3525	0
Ped Intf Time (s)	0.0	0.0	0.0	0.0	0.0	0.0	0.0	0.0	0.0	0.0	0.0	0.0
Pedestrian Frequency (%)		0.00			0.00			0.00			0.00	
Protected Option Allowed		No			No			No			No	
Reference Time (s)			0.0			0.0			0.0			0.0
Adj Reference Time (s)			0.0			0.0			0.0			0.0
Permitted Option												
Adj Saturation A (vph)	0	1111		0	429		0	115		0	227	
Reference Time A (s)	0.0	29.0		0.0	44.3		0.0	12.5		0.0	18.2	
Adj Saturation B (vph	NA	NA		NA	NA		0	1727		0	1768	
Reference Time B (s)	NA	NA		NA	NA		8.8	6.2		9.0	8.4	
Reference Time (s)		29.0			44.3			8.8			9.0	
Adj Reference Time (s)		34.0			49.3			22.0			22.0	
Split Option												
Ref Time Combined (s)	0.0	19.8		0.0	15.1		0.0	2.2		0.0	4.4	
Ref Time Seperate (s)	0.7	16.2		2.2	13.2		0.8	1.2		1.0	3.3	
Reference Time (s)	19.8	19.8		15.1	15.1		2.2	2.2		4.4	4.4	
Adj Reference Time (s)	26.0	26.0		26.0	26.0		22.0	22.0		22.0	22.0	

Summary	EB WB	NB SB	Combined
Protected Option (s)	NA	NA	
Permitted Option (s)	49.3	22.0	
Split Option (s)	52.0	44.0	
Minimum (s)	49.3	22.0	71.3

Right Turns
Adj Reference Time (s)
Cross Thru Ref Time (s)
Oncoming Left Ref Time (s)
Combined (s)

Intersection Summary			
Intersection Capacity Utilization	59.5%	ICU Level of Service	B

Reference Times and Phasing Options do not represent an optimized timing plan.

Movement	EBL	EBT	EBR	WBL	WBT	WBR	NBL	NBT	NBR	SBL	SBT	SBR
Lane Configurations												
Volume (vph)	6	13	33	37	13	8	15	74	13	7	201	4
Pedestrians												
Ped Button												
Pedestrian Timing (s)												
Free Right			No			No			No			No
Ideal Flow	1900	1900	1900	1900	1900	1900	1900	1900	1900	1900	1900	1900
Lost Time (s)	4.0	4.0	4.0	4.0	4.0	4.0	4.0	4.0	4.0	4.0	4.0	4.0
Minimum Green (s)	4.0	4.0	4.0	4.0	4.0	4.0	4.0	4.0	4.0	4.0	4.0	4.0
Refr Cycle Length (s)	120	120	120	120	120	120	120	120	120	120	120	120
Volume Combined (vph)	0	52	0	0	58	0	0	89	13	0	208	4
Lane Utilization Factor	1.00	1.00	1.00	1.00	1.00	1.00	1.00	1.00	1.00	1.00	1.00	1.00
Turning Factor (vph)	0.95	0.90	0.85	0.95	0.95	0.85	0.95	0.99	0.85	0.95	1.00	0.85
Saturated Flow (vph)	0	1709	0	0	1801	0	0	1884	1615	0	1897	1615
Ped Intf Time (s)	0.0	0.0	0.0	0.0	0.0	0.0	0.0	0.0	0.0	0.0	0.0	0.0
Pedestrian Frequency (%)		0.00			0.00			0.00			0.00	
Protected Option Allowed		No			No			No			No	
Reference Time (s)			0.0			0.0			1.0			0.3
Adj Reference Time (s)			0.0			0.0			8.0			8.0
Permitted Option												
Adj Saturation A (vph)	0	1735		0	487		0	532		0	1281	
Reference Time A (s)	0.0	3.6		0.0	14.3		0.0	20.1		0.0	19.5	
Adj Saturation B (vph	0	0		0	0		NA	NA		0	0	
Reference Time B (s)	8.4	11.7		10.5	11.9		NA	NA		8.5	21.2	
Reference Time (s)		3.6			11.9			20.1			19.5	
Adj Reference Time (s)		8.0			15.9			24.1			23.5	
Split Option												
Ref Time Combined (s)	0.0	3.7		0.0	3.9		0.0	5.7		0.0	13.2	
Ref Time Seperate (s)	0.4	0.9		2.5	0.9		1.0	4.7		0.5	12.7	
Reference Time (s)	3.7	3.7		3.9	3.9		5.7	5.7		13.2	13.2	
Adj Reference Time (s)	8.0	8.0		8.0	8.0		9.7	9.7		17.2	17.2	

Summary	EB WB	NB SB	Combined
Protected Option (s)	NA	NA	
Permitted Option (s)	15.9	24.1	
Split Option (s)	16.0	26.8	
Minimum (s)	15.9	24.1	39.9

Right Turns	NBR	SBR
Adj Reference Time (s)	8.0	8.0
Cross Thru Ref Time (s)	8.0	8.0
Oncoming Left Ref Time (s)	17.2	9.7
Combined (s)	33.2	25.7

Intersection Summary			
Intersection Capacity Utilization	33.3%	ICU Level of Service	A

Reference Times and Phasing Options do not represent an optimized timing plan.

Movement	EBL	EBT	EBR	WBL	WBT	WBR	NBL	NBT	NBR	SBL	SBT	SBR
Lane Configurations												
Volume (vph)	30	113	26	16	61	17	21	74	53	37	72	73
Pedestrians												
Ped Button												
Pedestrian Timing (s)												
Free Right			No			No			No			No
Ideal Flow	1900	1900	1900	1900	1900	1900	1900	1900	1900	1900	1900	1900
Lost Time (s)	4.5	4.5	4.5	4.5	4.5	4.5	4.5	4.5	4.0	4.5	4.5	4.0
Minimum Green (s)	22.0	22.0	22.0	22.0	22.0	22.0	19.0	19.0	4.0	19.0	19.0	4.0
Refr Cycle Length (s)	120	120	120	120	120	120	120	120	120	120	120	120
Volume Combined (vph)	30	113	26	16	61	17	0	148	0	0	182	0
Lane Utilization Factor	1.00	1.00	1.00	1.00	1.00	1.00	1.00	0.95	1.00	1.00	0.95	1.00
Turning Factor (vph)	0.95	1.00	0.85	0.95	1.00	0.85	0.95	0.94	0.85	0.95	0.93	0.85
Saturated Flow (vph)	1805	1900	1615	1805	1900	1615	0	3399	0	0	3365	0
Ped Intf Time (s)	0.0	0.0	0.0	0.0	0.0	0.0	0.0	0.0	0.0	0.0	0.0	0.0
Pedestrian Frequency (%)		0.00			0.00			0.00			0.00	
Protected Option Allowed		Yes			Yes			No			No	
Reference Time (s)	2.0	7.1	1.9	1.1	3.9	1.3			0.0			0.0
Adj Reference Time (s)	26.5	26.5	26.5	26.5	26.5	26.5			0.0			0.0
Permitted Option												
Adj Saturation A (vph)	120	1900		120	1900		0	155		0	112	
Reference Time A (s)	29.9	7.1		16.0	3.9		0.0	24.8		0.0	39.6	
Adj Saturation B (vph	0	1900		0	1900		NA	NA		NA	NA	
Reference Time B (s)	10.0	7.1		9.1	3.9		NA	NA		NA	NA	
Reference Time (s)		10.0			9.1			24.8			39.6	
Adj Reference Time (s)		26.5			26.5			29.3			44.1	
Split Option												
Ref Time Combined (s)	2.0	7.1		1.1	3.9		0.0	5.2		0.0	6.5	
Ref Time Seperate (s)	2.0	7.1		1.1	3.9		1.4	2.6		2.5	2.6	
Reference Time (s)	7.1	7.1		3.9	3.9		5.2	5.2		6.5	6.5	
Adj Reference Time (s)	26.5	26.5		26.5	26.5		23.5	23.5		23.5	23.5	

Summary	EB WB	NB SB	Combined
Protected Option (s)	53.0	NA	
Permitted Option (s)	26.5	44.1	
Split Option (s)	53.0	47.0	
Minimum (s)	26.5	44.1	70.6

Right Turns	EBR	WBR
Adj Reference Time (s)	26.5	26.5
Cross Thru Ref Time (s)	23.5	23.5
Oncoming Left Ref Time (s)	26.5	26.5
Combined (s)	76.5	76.5

Intersection Summary			
Intersection Capacity Utilization	63.7%	ICU Level of Service	B

Reference Times and Phasing Options do not represent an optimized timing plan.

Movement	EBL	EBT	EBR	WBL	WBT	WBR	NBL	NBT	NBR	SBL	SBT	SBR
Lane Configurations												
Volume (vph)	89	1704	10	10	738	29	7	25	8	17	32	24
Pedestrians												
Ped Button												
Pedestrian Timing (s)												
Free Right			No			No			No			No
Ideal Flow	1900	1900	1900	1900	1900	1900	1900	1900	1900	1900	1900	1900
Lost Time (s)	5.0	5.0	4.0	5.0	5.0	4.0	5.0	5.0	4.0	5.0	5.0	4.0
Minimum Green (s)	24.0	24.0	4.0	24.0	24.0	4.0	7.0	7.0	4.0	7.0	7.0	4.0
Refr Cycle Length (s)	120	120	120	120	120	120	120	120	120	120	120	120
Volume Combined (vph)	89	1714	0	10	767	0	0	40	0	0	73	0
Lane Utilization Factor	1.00	0.95	1.00	1.00	0.95	1.00	1.00	0.95	1.00	1.00	0.95	1.00
Turning Factor (vph)	0.95	1.00	0.85	0.95	0.99	0.85	0.95	0.96	0.85	0.95	0.94	0.85
Saturated Flow (vph)	1805	3614	0	1805	3597	0	0	3478	0	0	3399	0
Ped Intf Time (s)	0.0	0.0	0.0	0.0	0.0	0.0	0.0	0.0	0.0	0.0	0.0	0.0
Pedestrian Frequency (%)		0.00			0.00			0.00			0.00	
Protected Option Allowed		Yes			Yes			No			No	
Reference Time (s)	5.9	56.9	0.0	0.7	25.6	0.0			0.0			0.0
Adj Reference Time (s)	29.0	61.9	0.0	29.0	30.6	0.0			0.0			0.0
Permitted Option												
Adj Saturation A (vph)	120	1807		120	1799		0	116		0	113	
Reference Time A (s)	88.8	56.9		10.0	25.6		0.0	7.2		0.0	18.0	
Adj Saturation B (vph	NA	NA		NA	NA		0	1743		0	1693	
Reference Time B (s)	NA	NA		NA	NA		8.5	5.4		9.1	6.6	
Reference Time (s)		88.8			25.6			7.2			9.1	
Adj Reference Time (s)		93.8			30.6			12.2			14.1	
Split Option												
Ref Time Combined (s)	5.9	56.9		0.7	25.6		0.0	1.4		0.0	2.6	
Ref Time Seperate (s)	5.9	56.6		0.7	24.6		0.5	0.9		1.1	1.1	
Reference Time (s)	56.9	56.9		25.6	25.6		1.4	1.4		2.6	2.6	
Adj Reference Time (s)	61.9	61.9		30.6	30.6		12.0	12.0		12.0	12.0	

Summary	EB WB	NB SB	Combined
Protected Option (s)	90.9	NA	
Permitted Option (s)	93.8	14.1	
Split Option (s)	92.5	24.0	
Minimum (s)	90.9	14.1	105.0

Right Turns
Adj Reference Time (s)
Cross Thru Ref Time (s)
Oncoming Left Ref Time (s)
Combined (s)

Intersection Summary			
Intersection Capacity Utilization	87.5%	ICU Level of Service	E

Reference Times and Phasing Options do not represent an optimized timing plan.

Intersection Capacity Utilization
1: E Street & 9th Street

08-14-2024

Movement	EBL	EBT	EBR	WBL	WBT	WBR	NBL	NBT	NBR	SBL	SBT	SBR
Lane Configurations												
Volume (vph)	53	472	33	42	567	77	42	355	54	56	244	41
Pedestrians												
Ped Button												
Pedestrian Timing (s)												
Free Right			No			No			No			No
Ideal Flow	1600	1600	1600	1600	1600	1600	1600	1600	1600	1600	1600	1600
Lost Time (s)	4.0	5.0	4.0	4.0	5.0	4.0	4.0	5.1	4.0	4.0	5.1	4.0
Minimum Green (s)	7.0	6.0	4.0	8.0	6.0	4.0	8.0	10.0	4.0	9.0	10.0	4.0
Refr Cycle Length (s)	120	120	120	120	120	120	120	120	120	120	120	120
Volume Combined (vph)	53	505	0	42	644	0	42	409	0	56	285	0
Lane Utilization Factor	1.00	0.95	1.00	1.00	0.95	1.00	1.00	1.00	1.00	1.00	1.00	1.00
Turning Factor (vph)	0.95	0.99	0.85	0.95	0.98	0.85	0.95	0.98	0.85	0.95	0.98	0.85
Saturated Flow (vph)	1520	3017	0	1520	2992	0	1520	1568	0	1520	1565	0
Ped Intf Time (s)	0.0	0.0	0.0	0.0	0.0	0.0	0.0	0.0	0.0	0.0	0.0	0.0
Pedestrian Frequency (%)		0.00			0.00			0.00			0.00	
Protected Option Allowed		Yes			Yes			Yes			Yes	
Reference Time (s)	4.2	20.1	0.0	3.3	25.8	0.0	3.3	31.3	0.0	4.4	21.8	0.0
Adj Reference Time (s)	11.0	25.1	0.0	12.0	30.8	0.0	12.0	36.4	0.0	13.0	26.9	0.0
Permitted Option												
Adj Saturation A (vph)	101	1508		101	1496		101	1568		101	1565	
Reference Time A (s)	62.8	20.1		49.7	25.8		49.7	31.3		66.3	21.8	
Adj Saturation B (vph	NA	NA		NA	NA		NA	NA		NA	NA	
Reference Time B (s)	NA	NA		NA	NA		NA	NA		NA	NA	
Reference Time (s)		62.8			49.7			49.7			66.3	
Adj Reference Time (s)		67.8			54.7			54.8			71.4	
Split Option												
Ref Time Combined (s)	4.2	20.1		3.3	25.8		3.3	31.3		4.4	21.8	
Ref Time Seperate (s)	4.2	18.8		3.3	22.7		3.3	27.2		4.4	18.7	
Reference Time (s)	20.1	20.1		25.8	25.8		31.3	31.3		21.8	21.8	
Adj Reference Time (s)	25.1	25.1		30.8	30.8		36.4	36.4		26.9	26.9	

Summary	EB WB	NB SB	Combined
Protected Option (s)	41.8	49.4	
Permitted Option (s)	67.8	71.4	
Split Option (s)	55.9	63.3	
Minimum (s)	41.8	49.4	91.2

Right Turns
Adj Reference Time (s)
Cross Thru Ref Time (s)
Oncoming Left Ref Time (s)
Combined (s)

Intersection Summary			
Intersection Capacity Utilization	76.0%	ICU Level of Service	D

Reference Times and Phasing Options do not represent an optimized timing plan.

Movement	EBL	EBT	EBR	WBL	WBT	WBR	NBL	NBT	NBR	SBL	SBT	SBR
Lane Configurations												
Volume (vph)	26	37	17	14	34	21	38	413	19	7	311	13
Pedestrians												
Ped Button												
Pedestrian Timing (s)												
Free Right			No			No			No			No
Ideal Flow	1600	1600	1600	1600	1600	1600	1600	1600	1600	1600	1600	1600
Lost Time (s)	4.6	4.6	4.0	4.6	4.6	4.0	4.0	5.0	4.0	4.0	5.0	4.0
Minimum Green (s)	7.0	7.0	4.0	7.0	7.0	4.0	8.0	10.0	4.0	9.0	10.0	4.0
Refr Cycle Length (s)	120	120	120	120	120	120	120	120	120	120	120	120
Volume Combined (vph)	0	80	0	0	69	0	38	432	0	7	324	0
Lane Utilization Factor	1.00	1.00	1.00	1.00	1.00	1.00	1.00	1.00	1.00	1.00	1.00	1.00
Turning Factor (vph)	0.95	0.95	0.85	0.95	0.94	0.85	0.95	0.99	0.85	0.95	0.99	0.85
Saturated Flow (vph)	0	1524	0	0	1511	0	1520	1589	0	1520	1590	0
Ped Intf Time (s)	0.0	0.0	0.0	0.0	0.0	0.0	0.0	0.0	0.0	0.0	0.0	0.0
Pedestrian Frequency (%)		0.00			0.00			0.00			0.00	
Protected Option Allowed		No			No			Yes			Yes	
Reference Time (s)			0.0			0.0	3.0	32.6	0.0	0.6	24.4	0.0
Adj Reference Time (s)			0.0			0.0	12.0	37.6	0.0	13.0	29.4	0.0
Permitted Option												
Adj Saturation A (vph)	0	933		0	1305		101	1589		101	1590	
Reference Time A (s)	0.0	10.3		0.0	6.3		45.0	32.6		8.3	24.4	
Adj Saturation B (vph	0	0		0	0		NA	NA		NA	NA	
Reference Time B (s)	10.1	14.3		9.1	13.5		NA	NA		NA	NA	
Reference Time (s)		10.3			6.3			45.0			24.4	
Adj Reference Time (s)		14.9			11.6			50.0			29.4	
Split Option												
Ref Time Combined (s)	0.0	6.3		0.0	5.5		3.0	32.6		0.6	24.4	
Ref Time Seperate (s)	2.1	2.9		1.1	2.7		3.0	31.2		0.6	23.5	
Reference Time (s)	6.3	6.3		5.5	5.5		32.6	32.6		24.4	24.4	
Adj Reference Time (s)	11.6	11.6		11.6	11.6		37.6	37.6		29.4	29.4	

Summary	EB WB	NB SB	Combined
Protected Option (s)	NA	50.6	
Permitted Option (s)	14.9	50.0	
Split Option (s)	23.2	67.1	
Minimum (s)	14.9	50.0	64.9

Right Turns
Adj Reference Time (s)
Cross Thru Ref Time (s)
Oncoming Left Ref Time (s)
Combined (s)

Intersection Summary			
Intersection Capacity Utilization	54.1%	ICU Level of Service	A

Reference Times and Phasing Options do not represent an optimized timing plan.

Movement	EBL	EBT	EBR	WBL	WBT	WBR	NBL	NBT	NBR	SBL	SBT	SBR
Lane Configurations												
Volume (vph)	18	70	13	61	220	18	29	396	29	21	342	35
Pedestrians												
Ped Button												
Pedestrian Timing (s)												
Free Right			No			No			No			No
Ideal Flow	1900	1900	1900	1900	1900	1900	1900	1900	1900	1900	1900	1900
Lost Time (s)	5.0	5.0	4.0	5.0	5.0	4.0	4.0	5.0	4.0	4.0	5.0	4.0
Minimum Green (s)	7.0	7.0	4.0	7.0	7.0	4.0	8.0	10.0	4.0	9.0	10.0	4.0
Refr Cycle Length (s)	120	120	120	120	120	120	120	120	120	120	120	120
Volume Combined (vph)	18	83	0	61	238	0	29	425	0	21	377	0
Lane Utilization Factor	1.00	0.95	1.00	1.00	0.95	1.00	1.00	1.00	1.00	1.00	1.00	1.00
Turning Factor (vph)	0.95	0.98	0.85	0.95	0.99	0.85	0.95	0.99	0.85	0.95	0.99	0.85
Saturated Flow (vph)	1805	3533	0	1805	3577	0	1805	1881	0	1805	1874	0
Ped Intf Time (s)	0.0	0.0	0.0	0.0	0.0	0.0	0.0	0.0	0.0	0.0	0.0	0.0
Pedestrian Frequency (%)		0.00			0.00			0.00			0.00	
Protected Option Allowed		Yes			Yes			Yes			Yes	
Reference Time (s)	1.2	2.8	0.0	4.1	8.0	0.0	1.9	27.1	0.0	1.4	24.1	0.0
Adj Reference Time (s)	12.0	12.0	0.0	12.0	13.0	0.0	12.0	32.1	0.0	13.0	29.1	0.0
Permitted Option												
Adj Saturation A (vph)	120	1766		120	1788		120	1881		120	1874	
Reference Time A (s)	18.0	2.8		60.8	8.0		28.9	27.1		20.9	24.1	
Adj Saturation B (vph	NA	NA		0	3577		NA	NA		NA	NA	
Reference Time B (s)	NA	NA		12.1	8.0		NA	NA		NA	NA	
Reference Time (s)		18.0			12.1			28.9			24.1	
Adj Reference Time (s)		23.0			17.1			33.9			29.1	
Split Option												
Ref Time Combined (s)	1.2	2.8		4.1	8.0		1.9	27.1		1.4	24.1	
Ref Time Seperate (s)	1.2	2.4		4.1	7.4		1.9	25.3		1.4	21.9	
Reference Time (s)	2.8	2.8		8.0	8.0		27.1	27.1		24.1	24.1	
Adj Reference Time (s)	12.0	12.0		13.0	13.0		32.1	32.1		29.1	29.1	

Summary	EB WB	NB SB	Combined
Protected Option (s)	25.0	45.1	
Permitted Option (s)	23.0	33.9	
Split Option (s)	25.0	61.3	
Minimum (s)	23.0	33.9	56.9

Right Turns
Adj Reference Time (s)
Cross Thru Ref Time (s)
Oncoming Left Ref Time (s)
Combined (s)

Intersection Summary			
Intersection Capacity Utilization	47.4%	ICU Level of Service	A

Reference Times and Phasing Options do not represent an optimized timing plan.

Movement	EBL	EBT	EBR	WBL	WBT	WBR	NBL	NBT	NBR	SBL	SBT	SBR
Lane Configurations												
Volume (vph)	38	1005	53	44	1264	47	100	375	66	58	233	77
Pedestrians												
Ped Button												
Pedestrian Timing (s)												
Free Right			No			No			No			No
Ideal Flow	1900	1900	1900	1900	1900	1900	1900	1900	1900	1900	1900	1900
Lost Time (s)	5.0	5.0	4.0	5.0	5.0	4.0	4.0	6.0	4.0	4.0	6.0	4.0
Minimum Green (s)	9.0	9.0	4.0	9.0	9.0	4.0	9.0	9.0	4.0	9.0	9.0	4.0
Refr Cycle Length (s)	120	120	120	120	120	120	120	120	120	120	120	120
Volume Combined (vph)	38	1058	0	44	1311	0	100	441	0	58	310	0
Lane Utilization Factor	1.00	0.95	1.00	1.00	0.95	1.00	1.00	1.00	1.00	1.00	1.00	1.00
Turning Factor (vph)	0.95	0.99	0.85	0.95	0.99	0.85	0.95	0.98	0.85	0.95	0.96	0.85
Saturated Flow (vph)	1805	3590	0	1805	3598	0	1805	1857	0	1805	1829	0
Ped Intf Time (s)	0.0	0.0	0.0	0.0	0.0	0.0	0.0	0.0	0.0	0.0	0.0	0.0
Pedestrian Frequency (%)		0.00			0.00			0.00			0.00	
Protected Option Allowed		Yes			Yes			Yes			Yes	
Reference Time (s)	2.5	35.4	0.0	2.9	43.7	0.0	6.6	28.5	0.0	3.9	20.3	0.0
Adj Reference Time (s)	14.0	40.4	0.0	14.0	48.7	0.0	13.0	34.5	0.0	13.0	26.3	0.0
Permitted Option												
Adj Saturation A (vph)	120	1795		120	1799		120	1857		120	1829	
Reference Time A (s)	37.9	35.4		43.9	43.7		99.7	28.5		57.8	20.3	
Adj Saturation B (vph	NA	NA		NA	NA		NA	NA		NA	NA	
Reference Time B (s)	NA	NA		NA	NA		NA	NA		NA	NA	
Reference Time (s)		37.9			43.9			99.7			57.8	
Adj Reference Time (s)		42.9			48.9			105.7			63.8	
Split Option												
Ref Time Combined (s)	2.5	35.4		2.9	43.7		6.6	28.5		3.9	20.3	
Ref Time Seperate (s)	2.5	33.6		2.9	42.2		6.6	24.2		3.9	15.3	
Reference Time (s)	35.4	35.4		43.7	43.7		28.5	28.5		20.3	20.3	
Adj Reference Time (s)	40.4	40.4		48.7	48.7		34.5	34.5		26.3	26.3	

Summary	EB WB	NB SB	Combined
Protected Option (s)	62.7	47.5	
Permitted Option (s)	48.9	105.7	
Split Option (s)	89.1	60.8	
Minimum (s)	48.9	47.5	96.4

Right Turns
Adj Reference Time (s)
Cross Thru Ref Time (s)
Oncoming Left Ref Time (s)
Combined (s)

Intersection Summary			
Intersection Capacity Utilization	80.3%	ICU Level of Service	D

Reference Times and Phasing Options do not represent an optimized timing plan.

Movement	EBL	EBT	EBR	WBL	WBT	WBR	NBL	NBT	NBR	SBL	SBT	SBR
Lane Configurations												
Volume (vph)	18	521	43	14	633	27	49	91	21	14	41	30
Pedestrians												
Ped Button												
Pedestrian Timing (s)												
Free Right			No			No			No			No
Ideal Flow	1900	1900	1900	1900	1900	1900	1900	1900	1900	1900	1900	1900
Lost Time (s)	5.0	5.0	4.0	5.0	5.0	4.0	5.0	5.0	4.0	5.0	5.0	4.0
Minimum Green (s)	21.0	21.0	4.0	21.0	21.0	4.0	17.0	17.0	4.0	17.0	17.0	4.0
Refr Cycle Length (s)	120	120	120	120	120	120	120	120	120	120	120	120
Volume Combined (vph)	0	582	0	0	674	0	0	161	0	0	85	0
Lane Utilization Factor	1.00	0.95	1.00	1.00	0.95	1.00	1.00	0.95	1.00	1.00	0.95	1.00
Turning Factor (vph)	0.95	0.99	0.85	0.95	0.99	0.85	0.95	0.97	0.85	0.95	0.94	0.85
Saturated Flow (vph)	0	3572	0	0	3592	0	0	3493	0	0	3398	0
Ped Intf Time (s)	0.0	0.0	0.0	0.0	0.0	0.0	0.0	0.0	0.0	0.0	0.0	0.0
Pedestrian Frequency (%)		0.00			0.00			0.00			0.00	
Protected Option Allowed		No			No			No			No	
Reference Time (s)			0.0			0.0			0.0			0.0
Adj Reference Time (s)			0.0			0.0			0.0			0.0
Permitted Option												
Adj Saturation A (vph)	0	881		0	1088		0	116		0	116	
Reference Time A (s)	0.0	34.7		0.0	34.1		0.0	50.5		0.0	15.0	
Adj Saturation B (vph	NA	NA		NA	NA		0	1758		0	1694	
Reference Time B (s)	NA	NA		NA	NA		11.3	9.5		8.9	7.0	
Reference Time (s)		34.7			34.1			11.3			8.9	
Adj Reference Time (s)		39.7			39.1			22.0			22.0	
Split Option												
Ref Time Combined (s)	0.0	19.6		0.0	22.5		0.0	5.5		0.0	3.0	
Ref Time Seperate (s)	1.2	17.5		0.9	21.1		3.3	3.1		0.9	1.5	
Reference Time (s)	19.6	19.6		22.5	22.5		5.5	5.5		3.0	3.0	
Adj Reference Time (s)	26.0	26.0		27.5	27.5		22.0	22.0		22.0	22.0	

Summary	EB WB	NB SB	Combined
Protected Option (s)	NA	NA	
Permitted Option (s)	39.7	22.0	
Split Option (s)	53.5	44.0	
Minimum (s)	39.7	22.0	61.7

Right Turns
Adj Reference Time (s)
Cross Thru Ref Time (s)
Oncoming Left Ref Time (s)
Combined (s)

Intersection Summary			
Intersection Capacity Utilization	51.4%	ICU Level of Service	A

Reference Times and Phasing Options do not represent an optimized timing plan.

Movement	EBL	EBT	EBR	WBL	WBT	WBR	NBL	NBT	NBR	SBL	SBT	SBR
Lane Configurations												
Volume (vph)	6	18	11	35	37	38	19	122	9	17	58	17
Pedestrians												
Ped Button												
Pedestrian Timing (s)												
Free Right			No			No			No			No
Ideal Flow	1900	1900	1900	1900	1900	1900	1900	1900	1900	1900	1900	1900
Lost Time (s)	4.0	4.0	4.0	4.0	4.0	4.0	4.0	4.0	4.0	4.0	4.0	4.0
Minimum Green (s)	4.0	4.0	4.0	4.0	4.0	4.0	4.0	4.0	4.0	4.0	4.0	4.0
Refr Cycle Length (s)	120	120	120	120	120	120	120	120	120	120	120	120
Volume Combined (vph)	0	35	0	0	110	0	0	141	9	0	75	17
Lane Utilization Factor	1.00	1.00	1.00	1.00	1.00	1.00	1.00	1.00	1.00	1.00	1.00	1.00
Turning Factor (vph)	0.95	0.94	0.85	0.95	0.93	0.85	0.95	0.99	0.85	0.95	0.99	0.85
Saturated Flow (vph)	0	1795	0	0	1773	0	0	1887	1615	0	1878	1615
Ped Intf Time (s)	0.0	0.0	0.0	0.0	0.0	0.0	0.0	0.0	0.0	0.0	0.0	0.0
Pedestrian Frequency (%)		0.00			0.00			0.00			0.00	
Protected Option Allowed		No			No			No			No	
Reference Time (s)			0.0			0.0			0.7			1.3
Adj Reference Time (s)			0.0			0.0			8.0			8.0
Permitted Option												
Adj Saturation A (vph)	0	1588		0	1012		0	627		0	421	
Reference Time A (s)	0.0	2.6		0.0	13.0		0.0	27.0		0.0	21.4	
Adj Saturation B (vph	0	0		0	0		0	0		NA	NA	
Reference Time B (s)	8.4	10.3		10.3	15.4		9.3	17.0		NA	NA	
Reference Time (s)		2.6			13.0			17.0			21.4	
Adj Reference Time (s)		8.0			17.0			21.0			25.4	
Split Option												
Ref Time Combined (s)	0.0	2.3		0.0	7.4		0.0	9.0		0.0	4.8	
Ref Time Seperate (s)	0.4	1.2		2.3	2.5		1.3	7.7		1.1	3.7	
Reference Time (s)	2.3	2.3		7.4	7.4		9.0	9.0		4.8	4.8	
Adj Reference Time (s)	8.0	8.0		11.4	11.4		13.0	13.0		8.8	8.8	

Summary	EB WB	NB SB	Combined
Protected Option (s)	NA	NA	
Permitted Option (s)	17.0	25.4	
Split Option (s)	19.4	21.8	
Minimum (s)	17.0	21.8	38.8

Right Turns	NBR	SBR
Adj Reference Time (s)	8.0	8.0
Cross Thru Ref Time (s)	8.0	11.4
Oncoming Left Ref Time (s)	8.8	13.0
Combined (s)	24.8	32.4

Intersection Summary			
Intersection Capacity Utilization	32.3%	ICU Level of Service	A

Reference Times and Phasing Options do not represent an optimized timing plan.

Movement	EBL	EBT	EBR	WBL	WBT	WBR	NBL	NBT	NBR	SBL	SBT	SBR
Lane Configurations												
Volume (vph)	19	66	19	18	244	21	44	85	21	17	91	44
Pedestrians												
Ped Button												
Pedestrian Timing (s)												
Free Right			No			No			No			No
Ideal Flow	1900	1900	1900	1900	1900	1900	1900	1900	1900	1900	1900	1900
Lost Time (s)	4.5	4.5	4.5	4.5	4.5	4.5	4.5	4.5	4.0	4.5	4.5	4.0
Minimum Green (s)	22.0	22.0	22.0	22.0	22.0	22.0	19.0	19.0	4.0	19.0	19.0	4.0
Refr Cycle Length (s)	120	120	120	120	120	120	120	120	120	120	120	120
Volume Combined (vph)	19	66	19	18	244	21	0	150	0	0	152	0
Lane Utilization Factor	1.00	1.00	1.00	1.00	1.00	1.00	1.00	0.95	1.00	1.00	0.95	1.00
Turning Factor (vph)	0.95	1.00	0.85	0.95	1.00	0.85	0.95	0.96	0.85	0.95	0.95	0.85
Saturated Flow (vph)	1805	1900	1615	1805	1900	1615	0	3490	0	0	3441	0
Ped Intf Time (s)	0.0	0.0	0.0	0.0	0.0	0.0	0.0	0.0	0.0	0.0	0.0	0.0
Pedestrian Frequency (%)		0.00			0.00			0.00			0.00	
Protected Option Allowed		Yes			Yes			No			No	
Reference Time (s)	1.3	4.2	1.4	1.2	15.4	1.6			0.0			0.0
Adj Reference Time (s)	26.5	26.5	26.5	26.5	26.5	26.5			0.0			0.0
Permitted Option												
Adj Saturation A (vph)	120	1900		120	1900		0	116		0	236	
Reference Time A (s)	18.9	4.2		18.0	15.4		0.0	45.4		0.0	21.4	
Adj Saturation B (vph	NA	NA		0	1900		NA	NA		0	1720	
Reference Time B (s)	NA	NA		9.2	15.4		NA	NA		9.1	9.3	
Reference Time (s)		18.9			15.4			45.4			9.3	
Adj Reference Time (s)		26.5			26.5			49.9			23.5	
Split Option												
Ref Time Combined (s)	1.3	4.2		1.2	15.4		0.0	5.2		0.0	5.3	
Ref Time Seperate (s)	1.3	4.2		1.2	15.4		2.9	2.9		1.1	3.2	
Reference Time (s)	4.2	4.2		15.4	15.4		5.2	5.2		5.3	5.3	
Adj Reference Time (s)	26.5	26.5		26.5	26.5		23.5	23.5		23.5	23.5	

Summary	EB WB	NB SB	Combined
Protected Option (s)	53.0	NA	
Permitted Option (s)	26.5	49.9	
Split Option (s)	53.0	47.0	
Minimum (s)	26.5	47.0	73.5

Right Turns	EBR	WBR
Adj Reference Time (s)	26.5	26.5
Cross Thru Ref Time (s)	23.5	23.5
Oncoming Left Ref Time (s)	26.5	26.5
Combined (s)	76.5	76.5

Intersection Summary			
Intersection Capacity Utilization	63.7%	ICU Level of Service	B

Reference Times and Phasing Options do not represent an optimized timing plan.

Movement	EBL	EBT	EBR	WBL	WBT	WBR	NBL	NBT	NBR	SBL	SBT	SBR
Lane Configurations												
Volume (vph)	85	999	50	14	1377	23	34	44	19	27	55	116
Pedestrians												
Ped Button												
Pedestrian Timing (s)												
Free Right			No			No			No			No
Ideal Flow	1900	1900	1900	1900	1900	1900	1900	1900	1900	1900	1900	1900
Lost Time (s)	5.0	5.0	4.0	5.0	5.0	4.0	5.0	5.0	4.0	5.0	5.0	4.0
Minimum Green (s)	24.0	24.0	4.0	24.0	24.0	4.0	7.0	7.0	4.0	7.0	7.0	4.0
Refr Cycle Length (s)	120	120	120	120	120	120	120	120	120	120	120	120
Volume Combined (vph)	85	1049	0	14	1400	0	0	97	0	0	198	0
Lane Utilization Factor	1.00	0.95	1.00	1.00	0.95	1.00	1.00	0.95	1.00	1.00	0.95	1.00
Turning Factor (vph)	0.95	0.99	0.85	0.95	1.00	0.85	0.95	0.95	0.85	0.95	0.91	0.85
Saturated Flow (vph)	1805	3592	0	1805	3609	0	0	3450	0	0	3277	0
Ped Intf Time (s)	0.0	0.0	0.0	0.0	0.0	0.0	0.0	0.0	0.0	0.0	0.0	0.0
Pedestrian Frequency (%)		0.00			0.00			0.00			0.00	
Protected Option Allowed		Yes			Yes			No			No	
Reference Time (s)	5.7	35.0	0.0	0.9	46.6	0.0			0.0			0.0
Adj Reference Time (s)	29.0	40.0	0.0	29.0	51.6	0.0			0.0			0.0
Permitted Option												
Adj Saturation A (vph)	120	1796		120	1804		0	115		0	160	
Reference Time A (s)	84.8	35.0		14.0	46.6		0.0	35.5		0.0	33.6	
Adj Saturation B (vph	NA	NA		NA	NA		NA	NA		0	1625	
Reference Time B (s)	NA	NA		NA	NA		NA	NA		9.8	11.3	
Reference Time (s)		84.8			46.6			35.5			11.3	
Adj Reference Time (s)		89.8			51.6			40.5			16.3	
Split Option												
Ref Time Combined (s)	5.7	35.0		0.9	46.6		0.0	3.4		0.0	7.3	
Ref Time Seperate (s)	5.7	33.4		0.9	45.8		2.3	1.5		1.8	2.0	
Reference Time (s)	35.0	35.0		46.6	46.6		3.4	3.4		7.3	7.3	
Adj Reference Time (s)	40.0	40.0		51.6	51.6		12.0	12.0		12.3	12.3	

Summary	EB WB	NB SB	Combined
Protected Option (s)	80.6	NA	
Permitted Option (s)	89.8	40.5	
Split Option (s)	91.6	24.3	
Minimum (s)	80.6	24.3	104.8

Right Turns
Adj Reference Time (s)
Cross Thru Ref Time (s)
Oncoming Left Ref Time (s)
Combined (s)

Intersection Summary			
Intersection Capacity Utilization	87.3%	ICU Level of Service	E

Reference Times and Phasing Options do not represent an optimized timing plan.

Appendices

This page intentionally left blank.